GROUP TAB LOCATOR

	Introduction
0	Lubrication & Maintenance
2	Suspension
3	Differential & Driveline
5	Brakes
7	Cooling
8A	Audio
8B	Chime/Buzzer
8E	Electronic Control Modules
8F	Engine Systems
8G	Heated Systems
8H	Horn
8I	Ignition Control
8J	Instrument Cluster
8L	Lamps
8M	Message Systems
8N	Power Systems
8O	Restraints
8P	Speed Control
8Q	Vehicle Theft Security
8R	Wipers/Washers
8W	Wiring
9	Engine
11	Exhaust System
13	Frame & Bumpers
14	Fuel System
19	Steering
21	Transmission and Transfer Case
22	Tires/Wheels
23	Body
24	Heating & Air Conditioning
25	Emissions Control
30	New Vehicle Preparation
	Component and System Index
Service Manual Comment Forms	(Rear of Manual)

INTRODUCTION

TABLE OF CONTENTS

page

BODY CODE PLATE
DESCRIPTION 1
FASTENER IDENTIFICATION
DESCRIPTION 1
FASTENER USAGE
DESCRIPTION 4
INTERNATIONAL VEHICLE CONTROL AND DISPLAY SYMBOLS
DESCRIPTION 4
METRIC SYSTEM
DESCRIPTION 5
TORQUE REFERENCES
DESCRIPTION 7
VECI LABEL
DESCRIPTION 9
VEHICLE IDENTIFICATION NUMBER
DESCRIPTION 9
VEHICLE SAFETY CERTIFICATION LABEL
DESCRIPTION 10

BODY CODE PLATE

DESCRIPTION

A metal Body Code plate is located in the engine compartment and attached to the top of the right frame rail. The information listed on the plate (Fig. 1) is used for manufacturing and service purposes.

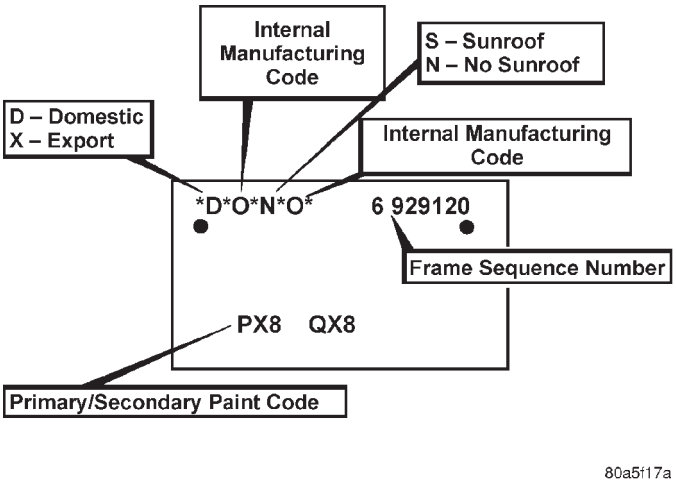

Fig. 1 Body Code Plate

FASTENER IDENTIFICATION

DESCRIPTION

The SAE bolt strength grades range from grade 2 to grade 8. The higher the grade number, the greater the bolt strength. Identification is determined by the line marks on the top of each bolt head. The actual bolt strength grade corresponds to the number of line marks plus 2. The most commonly used metric bolt strength classes are 9.8 and 10.9. The metric strength class identification number is imprinted on the head of the bolt. The higher the class number, the greater the bolt strength. Some metric nuts are imprinted with a single-digit strength class on the nut face. Refer to the Fastener Identification and Fastener Strength Charts.

FASTENER IDENTIFICATION (Continued)

Bolt Markings and Torque - Metric

Commercial Steel Class

Bolt Head Markings

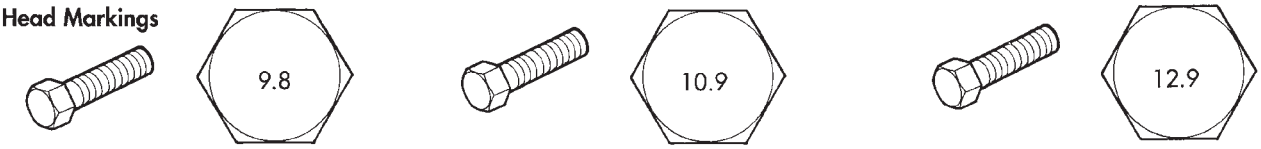

Body Size	Torque				Torque				Torque			
Diam.	Cast Iron		Aluminum		Cast Iron		Aluminum		Cast Iron		Aluminum	
mm	N•m	ft-lb	N•m	ft-lb	N•m	ft-lb	N•m	ft-lb	N•m	ft-lb	N•m	ft-lb
6	9	5	7	4	14	9	11	7	14	9	11	7
7	14	9	11	7	18	14	14	11	23	18	18	14
8	25	18	18	14	32	23	25	18	36	27	28	21
10	40	30	30	25	60	45	45	35	70	50	55	40
12	70	55	55	40	105	75	80	60	125	95	100	75
14	115	85	90	65	160	120	125	95	195	145	150	110
16	180	130	140	100	240	175	190	135	290	210	220	165
18	230	170	180	135	320	240	250	185	400	290	310	230

Bolt Markings and Torque Values - U.S. Customary

SAE Grade Number 5 8

Bolt Head Markings
These are all SAE Grade 5 (3) line

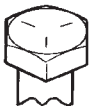

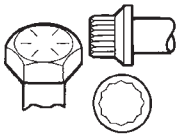

Body Size	Bolt Torque - Grade 5 Bolt				Bolt Torque - Grade 8 Bolt			
	Cast Iron		Aluminum		Cast Iron		Aluminum	
	N•m	ft-lb	N•m	ft-lb	N•m	ft-lb	N•m	ft-lb
1/4 - 20	9	7	8	6	15	11	12	9
- 28	12	9	9	7	18	13	14	10
5/16 - 18	20	15	16	12	30	22	24	18
- 24	23	17	19	14	33	24	25	19
3/8 - 16	40	30	25	20	55	40	40	30
- 24	40	30	35	25	60	45	45	35
7/16 - 14	60	45	45	35	90	65	65	50
- 20	65	50	55	40	95	70	75	55
1/2 - 13	95	70	75	55	130	95	100	75
- 20	100	75	80	60	150	110	120	90
9/16 - 12	135	100	110	80	190	140	150	110
- 18	150	110	115	85	210	155	170	125
5/8 - 11	180	135	150	110	255	190	205	150
- 18	210	155	160	120	290	215	230	170
3/4 - 10	325	240	255	190	460	340	365	270
- 16	365	270	285	210	515	380	410	300
7/8 - 9	490	360	380	280	745	550	600	440
- 14	530	390	420	310	825	610	660	490
1 - 8	720	530	570	420	1100	820	890	660
- 14	800	590	650	480	1200	890	960	710

80bdbd8c

FASTENER IDENTIFICATION (Continued)

HOW TO DETERMINE BOLT STRENGTH

	Mark	Class
Hexagon head bolt	Bolt head No. 4 — 5 — 6 — 7 — 8 — 9 — 10 — 11 —	4T 5T 6T 7T 8T 9T 10T 11T
	No mark	4T
Hexagon flange bolt w/washer hexagon bolt	No mark	4T
Hexagon head bolt	Two protruding lines	5T
Hexagon flange bolt w/washer hexagon bolt	Two protruding lines	6T
Hexagon head bolt	Three protruding lines	7T
Hexagon head bolt	Four protruding lines	8T

	Mark	Class
Stud bolt	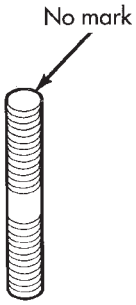 No mark	4T
	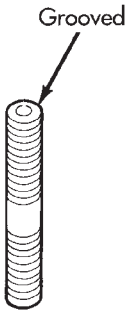 Grooved	6T
Welded bolt	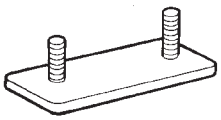	4T

95IN-4

FASTENER STRENGTH

FASTENER USAGE

DESCRIPTION - FASTENER USAGE

WARNING: USE OF AN INCORRECT FASTENER MAY RESULT IN COMPONENT DAMAGE OR PERSONAL INJURY.

Figure art, specifications and torque references in this Service Manual are identified in metric and SAE format.

During any maintenance or repair procedures, it is important to salvage all fasteners (nuts, bolts, etc.) for reassembly. If the fastener is not salvageable, a fastener of equivalent specification must be used.

DESCRIPTION - THREADED HOLE REPAIR

Most stripped threaded holes can be repaired using a Helicoil®. Follow the manufactures recommendations for application and repair procedures.

INTERNATIONAL VEHICLE CONTROL AND DISPLAY SYMBOLS

DESCRIPTION - INTERNATIONAL SYMBOLS

The graphic symbols illustrated in the following International Control and Display Symbols Chart are used to identify various instrument controls. The symbols correspond to the controls and displays that are located on the instrument panel.

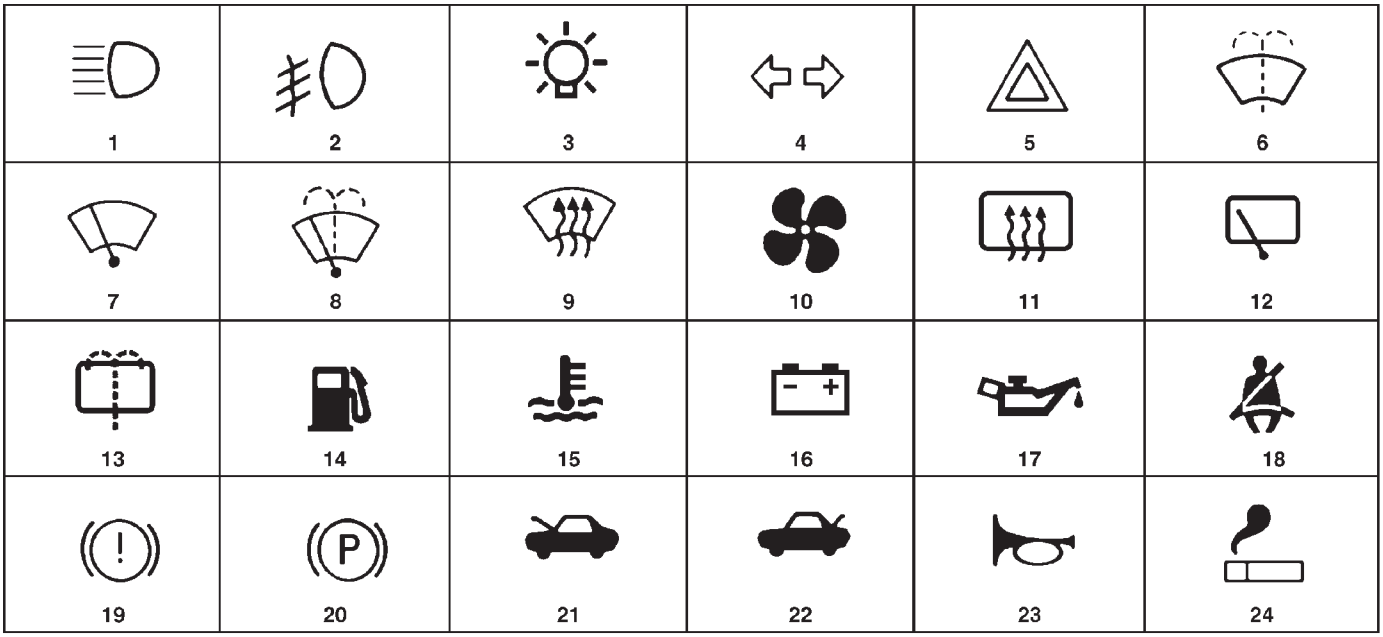

80be4788

INTERNATIONAL SYMBOLS

1	High Beam	13	Rear Window Washer
2	Fog Lamps	14	Fuel
3	Headlamp, Parking Lamps, Panel Lamps	15	Engine Coolant Temperature
4	Turn Warning	16	Battery Charging Condition
5	Hazard Warning	17	Engine Oil
6	Windshield Washer	18	Seat Belt
7	Windshield Wiper	19	Brake Failure
8	Windshield Wiper and Washer	20	Parking Brake
9	Windscreen Demisting and Defrosting	21	Front Hood
10	Ventilating Fan	22	Rear hood (Decklid)
11	Rear Window Defogger	23	Horn
12	Rear Window Wiper	24	Lighter

METRIC SYSTEM

DESCRIPTION - METRIC SYSTEM

The metric system is based on quantities of one, ten, one hundred, one thousand and one million .

The following chart will assist in converting metric units to equivalent English and SAE units, or vise versa.

CONVERSION FORMULAS AND EQUIVALENT VALUES

MULTIPLY	BY	TO GET	MULTIPLY	BY	TO GET
in-lbs	x 0.11298	= Newton Meters (N·m)	N·m	x 8.851	= in-lbs
ft-lbs	x 1.3558	= Newton Meters (N·m)	N·m	x 0.7376	= ft-lbs
Inches Hg (60° F)	x 3.377	= Kilopascals (kPa)	kPa	x 0.2961	= Inches Hg
psi	x 6.895	= Kilopascals (kPa)	kPa	x 0.145	= psi
Inches	x 25.4	= Millimeters (mm)	mm	x 0.03937	= Inches
Feet	x 0.3048	= Meters (M)	M	x 3.281	= Feet
Yards	x 0.9144	= Meters	M	x 1.0936	= Yards
mph	x 1.6093	= Kilometers/Hr. (Km/h)	Km/h	x 0.6214	= mph
Feet/Sec	x 0.3048	= Meters/Sec (M/S)	M/S	x 3.281	= Feet/Sec
mph	x 0.4470	= Meters/Sec (M/S)	M/S	x 2.237	= mph
Kilometers/ Hr. (Km/h)	x 0.27778	= Meters/Sec (M/S)	M/S	x 3.600	Kilometers/Hr. (Km/h)

COMMON METRIC EQUIVALENTS

1 inch = 25 Millimeters	1 Cubic Inch = 16 Cubic Centimeters
1 Foot = 0.3 Meter	1 Cubic Foot = 0.03 Cubic Meter
1 Yard = 0.9 Meter	1 Cubic Yard = 0.8 Cubic Meter
1 Mile = 1.6 Kilometers	

Refer to the Metric Conversion Chart to convert torque values listed in metric Newton- meters (N·m). Also, use the chart to convert between millimeters (mm) and inches (in.)

METRIC SYSTEM (Continued)

in-lbs to N•m

in- lb	N•m	in-lb	N•m	in-lb	N•m	in-lb	N•m	in-lb	N•m
2	.2260	42	4.7453	82	9.2646	122	13.7839	162	18.3032
4	.4519	44	4.9713	84	9.4906	124	14.0099	164	18.5292
6	.6779	46	5.1972	86	9.7165	126	14.2359	166	18.7552
8	.9039	48	5.4232	88	9.9425	128	14.4618	168	18.9811
10	1.1298	50	5.6492	90	10.1685	130	14.6878	170	19.2071
12	1.3558	52	5.8751	92	10.3944	132	14.9138	172	19.4331
14	1.5818	54	6.1011	94	10.6204	134	15.1397	174	19.6590
16	1.8077	56	6.3270	96	10.8464	136	15.3657	176	19.8850
18	2.0337	58	6.5530	98	11.0723	138	15.5917	178	20.1110
20	2.2597	60	6.7790	100	11.2983	140	15.8176	180	20.3369
22	2.4856	62	7.0049	102	11.5243	142	16.0436	182	20.5629
24	2.7116	64	7.2309	104	11.7502	144	16.2696	184	20.7889
26	2.9376	66	7.4569	106	11.9762	146	16.4955	186	21.0148
28	3.1635	68	7.6828	108	12.2022	148	16.7215	188	21.2408
30	3.3895	70	7.9088	110	12.4281	150	16.9475	190	21.4668
32	3.6155	72	8.1348	112	12.6541	152	17.1734	192	21.6927
34	3.8414	74	8.3607	114	12.8801	154	17.3994	194	21.9187
36	4.0674	76	8.5867	116	13.1060	156	17.6253	196	22.1447
38	4.2934	78	8.8127	118	13.3320	158	17.8513	198	22.3706
40	4.5193	80	9.0386	120	13.5580	160	18.0773	200	22.5966

N•m to in-lbs

N•m	in-lb	N•m	in-lb	N•m	in-lb	N•m	in-lb	N•m	in-lb
.2	1.7702	4.2	37.1747	8.2	72.5792	12.2	107.9837	16.2	143.3882
.4	3.5404	4.4	38.9449	8.4	74.3494	12.4	109.7539	16.4	145.1584
.6	5.3107	4.6	40.7152	8.6	76.1197	12.6	111.5242	16.6	146.9287
.8	7.0809	4.8	42.4854	8.8	77.8899	12.8	113.2944	16.8	148.6989
1	8.8511	5	44.2556	9	79.6601	13	115.0646	17	150.4691
1.2	10.6213	5.2	46.0258	9.2	81.4303	13.2	116.8348	17.2	152.2393
1.4	12.3916	5.4	47.7961	9.4	83.2006	13.4	118.6051	17.4	154.0096
1.6	14.1618	5.6	49.5663	9.6	84.9708	13.6	120.3753	17.6	155.7798
1.8	15.9320	5.8	51.3365	9.8	86.7410	13.8	122.1455	17.8	157.5500
2	17.7022	6	53.1067	10	88.5112	14	123.9157	18	159.3202
2.2	19.4725	6.2	54.8770	10.2	90.2815	14.2	125.6860	18.5	163.7458
2.4	21.2427	6.4	56.6472	10.4	92.0517	14.4	127.4562	19	168.1714
2.6	23.0129	6.6	58.4174	10.6	93.8219	14.6	129.2264	19.5	172.5970
2.8	24.7831	6.8	60.1876	10.8	95.5921	14.8	130.9966	20	177.0225
3	26.5534	7	61.9579	11	97.3624	15	132.7669	20.5	181.4480
3.2	28.3236	7.2	63.7281	11.2	99.1326	15.2	134.5371	21	185.8736
3.4	30.0938	7.4	65.4983	11.4	100.9028	15.4	136.3073	22	194.7247
3.6	31.8640	7.6	67.2685	11.6	102.6730	15.6	138.0775	23	203.5759
3.8	33.6342	7.8	69.0388	11.8	104.4433	15.8	139.8478	24	212.4270
4	35.4045	8	70.8090	12	106.2135	16	141.6180	25	221.2781

ft-lbs to N•m

ft-lb	N•m	ft-lb	N•m	ft-lb	N•m	ft-lb	N•m	ft-lb	N•m
1	1.3558	21	28.4722	41	55.5885	61	82.7049	81	109.8212
2	2.7116	22	29.8280	42	56.9444	62	84.0607	82	111.1770
3	4.0675	23	31.1838	43	58.3002	63	85.4165	83	112.5328
4	5.4233	24	32.5396	44	59.6560	64	86.7723	84	113.8888
5	6.7791	25	33.8954	45	61.0118	65	88.1281	85	115.2446
6	8.1349	26	35.2513	46	62.3676	66	89.4840	86	116.6004
7	9.4907	27	36.6071	47	63.7234	67	90.8398	87	117.9562
8	10.8465	28	37.9629	48	65.0793	68	92.1956	88	119.3120
9	12.2024	29	39.3187	49	66.4351	69	93.5514	89	120.6678
10	13.5582	30	40.6745	50	67.7909	70	94.9073	90	122.0236
11	14.9140	31	42.0304	51	69.1467	71	96.2631	91	123.3794
12	16.2698	32	43.3862	52	70.5025	72	97.6189	92	124.7352
13	17.6256	33	44.7420	53	71.8583	73	98.9747	93	126.0910
14	18.9815	34	46.0978	54	73.2142	74	100.3316	94	127.4468
15	20.3373	35	47.4536	55	74.5700	75	101.6862	95	128.8026
16	21.6931	36	48.8094	56	75.9258	76	103.0422	96	130.1586
17	23.0489	37	50.1653	57	77.2816	77	104.3980	97	131.5144
18	24.4047	38	51.5211	58	78.6374	78	105.7538	98	132.8702
19	25.7605	39	52.8769	59	79.9933	79	107.1196	99	134.2260
20	27.1164	40	54.2327	60	81.3491	80	108.4654	100	135.5820

N•m to ft-lbs

N•m	ft-lb	N•m	ft-lb	N•m	ft-lb	N•m	ft-lb	N•m	ft-lb
1	.7376	21	15.9888	41	30.2400	61	44.9913	81	59.7425
2	1.4751	22	16.2264	42	30.9776	62	45.7289	82	60.4801
3	2.2127	23	16.9639	43	31.7152	63	46.4664	83	61.2177
4	2.9502	24	17.7015	44	32.4527	64	47.2040	84	61.9552
5	3.6878	25	18.4391	45	33.1903	65	47.9415	85	62.6928
6	4.4254	26	19.1766	46	33.9279	66	48.6791	86	63.4303
7	5.1629	27	19.9142	47	34.6654	67	49.4167	87	64.1679
8	5.9005	28	20.6517	48	35.4030	68	50.1542	88	64.9545
9	6.6381	29	21.3893	49	36.1405	69	50.8918	89	65.6430
10	7.3756	30	22.1269	50	36.8781	70	51.6293	90	66.3806
11	8.1132	31	22.8644	51	37.6157	71	52.3669	91	67.1181
12	8.8507	32	23.6020	52	38.3532	72	53.1045	92	67.8557
13	9.5883	33	24.3395	53	39.0908	73	53.8420	93	68.5933
14	10.3259	34	25.0771	54	39.8284	74	54.5720	94	69.3308
15	11.0634	35	25.8147	55	40.5659	75	55.3172	95	70.0684
16	11.8010	36	26.5522	56	41.3035	76	56.0547	96	70.8060
17	12.5386	37	27.2898	57	42.0410	77	56.7923	97	71.5435
18	13.2761	38	28.0274	58	42.7786	78	57.5298	98	72.2811
19	14.0137	39	28.7649	59	43.5162	79	58.2674	99	73.0187
20	14.7512	40	29.5025	60	44.2537	80	59.0050	100	73.7562

in. to mm

in.	mm	in.	mm	in.	mm	in.	mm	in.	mm
.01	.254	.21	5.334	.41	10.414	.61	15.494	.81	20.574
.02	.508	.22	5.588	.42	10.668	.62	15.748	.82	20.828
.03	.762	.23	5.842	.43	10.922	.63	16.002	.83	21.082
.04	1.016	.24	6.096	.44	11.176	.64	16.256	.84	21.336
.05	1.270	.25	6.350	.45	11.430	.65	16.510	.85	21.590
.06	1.524	.26	6.604	.46	11.684	.66	16.764	.86	21.844
.07	1.778	.27	6.858	.47	11.938	.67	17.018	.87	22.098
.08	2.032	.28	7.112	.48	12.192	.68	17.272	.88	22.352
.09	2.286	.29	7.366	.49	12.446	.69	17.526	.89	22.606
.10	2.540	.30	7.620	.50	12.700	.70	17.780	.90	22.860
.11	2.794	.31	7.874	.51	12.954	.71	18.034	.91	23.114
.12	3.048	.32	8.128	.52	13.208	.72	18.288	.92	23.368
.13	3.302	.33	8.382	.53	13.462	.73	18.542	.93	23.622
.14	3.556	.34	8.636	.54	13.716	.74	18.796	.94	23.876
.15	3.810	.35	8.890	.55	13.970	.75	19.050	.95	24.130
.16	4.064	.36	9.144	.56	14.224	.76	19.304	.96	24.384
.17	3.318	.37	9.398	.57	14.478	.77	19.558	.97	24.638
.18	4.572	.38	9.652	.58	14.732	.78	19.812	.98	24.892
.19	4.826	.39	9.906	.59	14.986	.79	20.066	.99	25.146
.20	5.080	.40	10.160	.60	15.240	.80	20.320	1.00	25.400

mm to in.

mm	in.	mm	in.	mm	in.	mm	in.	mm	in.
.01	.00039	.21	.00827	.41	.01614	.61	.02402	.81	.03189
.02	.00079	.22	.00866	.42	.01654	.62	.02441	.82	.03228
.03	.00118	.23	.00906	.43	.01693	.63	.02480	.83	.03268
.04	.00157	.24	.00945	.44	.01732	.64	.02520	.84	.03307
.05	.00197	.25	.00984	.45	.01772	.65	.02559	.85	.03346
.06	.00236	.26	.01024	.46	.01811	.66	.02598	.86	.03386
.07	.00276	.27	.01063	.47	.01850	.67	.02638	.87	.03425
.08	.00315	.28	.01102	.48	.01890	.68	.02677	.88	.03465
.09	.00354	.29	.01142	.49	.01929	.69	.02717	.89	.03504
.10	.00394	.30	.01181	.50	.01969	.70	.02756	.90	.03543
.11	.00433	.31	.01220	.51	.02008	.71	.02795	.91	.03583
.12	.00472	.32	.01260	.52	.02047	.72	.02835	.92	.03622
.13	.00512	.33	.01299	.53	.02087	.73	.02874	.93	.03661
.14	.00551	.34	.01339	.54	.02126	.74	.02913	.94	.03701
.15	.00591	.35	.01378	.55	.02165	.75	.02953	.95	.03740
.16	.00630	.36	.01417	.56	.02205	.76	.02992	.96	.03780
.17	.00669	.37	.01457	.57	.02244	.77	.03032	.97	.03819
.18	.00709	.38	.01496	.58	.02283	.78	.03071	.98	.03858
.19	.00748	.39	.01535	.59	.02323	.79	.03110	.99	.03898
.20	.00787	.40	.01575	.60	.02362	.80	.03150	1.00	.03937

J901N-10

METRIC CONVERSION CHART

TORQUE REFERENCES

DESCRIPTION

Individual Torque Charts appear at the end of many Groups. Refer to the Standard Torque Specifications Chart for torque references not listed in the individual torque charts.

TORQUE REFERENCES (Continued)

SPECIFIED TORQUE FOR STANDARD BOLTS

Class	Diameter mm	Pitch mm	Specified torque					
			Hexagon head bolt			Hexagon flange bolt		
			N•m	kgf-cm	ft-lbf	N•m	kgf-cm	ft-lbf
4T	6	1	5	55	48 in.-lbf	6	60	52 in.-lbf
	8	1.25	12.5	130	9	14	145	10
	10	1.25	26	260	19	29	290	21
	12	1.25	47	480	35	53	540	39
	14	1.5	74	760	55	84	850	61
	16	1.5	115	1,150	83	—	—	—
5T	6	1	6.5	65	56 in.-lbf	7.5	75	65 in.-lbf
	8	1.25	15.5	160	12	17.5	175	13
	10	1.25	32	330	24	36	360	26
	12	1.25	59	600	43	65	670	48
	14	1.5	91	930	67	100	1,050	76
	16	1.5	140	1,400	101	—	—	—
6T	6	1	8	80	69 in.-lbf	9	90	78 in.-lbf
	8	1.25	19	195	14	21	210	15
	10	1.25	39	400	29	44	440	32
	12	1.25	71	730	53	80	810	59
	14	1.5	110	1,100	80	125	1,250	90
	16	1.5	170	1,750	127	—	—	—
7T	6	1	10.5	110	8	12	120	9
	8	1.25	25	260	19	28	290	21
	10	1.25	52	530	38	58	590	43
	12	1.25	95	970	70	105	1,050	76
	14	1.5	145	1,500	108	165	1,700	123
	16	1.5	230	2,300	166	—	—	—
8T	8	1.25	29	300	22	33	330	24
	10	1.25	61	620	45	68	690	50
	12	1.25	110	1,100	80	120	1,250	90
9T	8	1.25	34	340	25	37	380	27
	10	1.25	70	710	51	78	790	57
	12	1.25	125	1,300	94	140	1,450	105
10T	8	1.25	38	390	28	42	430	31
	10	1.25	78	800	58	88	890	64
	12	1.25	140	1,450	105	155	1,600	116
11T	8	1.25	42	430	31	47	480	35
	10	1.25	87	890	64	97	990	72
	12	1.25	155	1,600	116	175	1,800	130

TORQUE SPECIFICATIONS

VECI LABEL

DESCRIPTION

All vehicles are equipped with a combined VECI label(s). The label is located in the engine compartment on the vehicle hood (Fig. 2). Two labels are used for vehicles built for sale in the country of Canada.

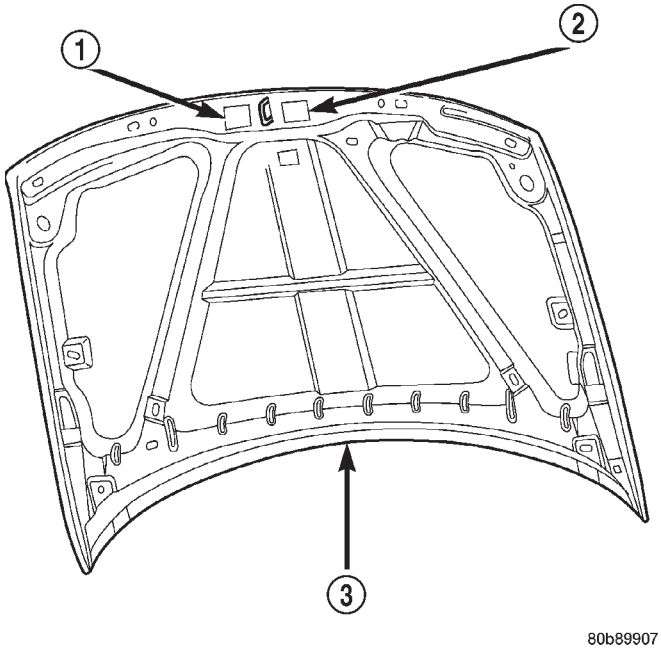

Fig. 2 VECI Label Location

1 - VECI LABEL (CANADIAN)
2 - VECI LABEL
3 - HOOD

The VECI label(s) contain the following:

- Engine family and displacement
- Evaporative family
- Emission control system schematic
- Certification application
- Spark plug and gap

The label also contains an engine vacuum schematic. There are unique labels for vehicles built for sale in the state of California and the country of Canada. Canadian labels are written in both the English and French languages. These labels are permanently attached and cannot be removed without defacing information and destroying label.

VEHICLE IDENTIFICATION NUMBER

DESCRIPTION

The Vehicle Identification Number (VIN) plate is attached to the top left side of the instrument panel. The VIN contains 17 characters that provide data concerning the vehicle. Refer to the decoding chart to determine the identification of a vehicle.

VEHICLE IDENTIFICATION NUMBER (Continued)

VEHICLE IDENTIFICATION NUMBER DECODING CHART

POSITION	INTERPRETATION	CODE = DESCRIPTION
1	Country of Origin	1 = United States
2	Make	J = Jeep
3	Vehicle Type	4 = MPV
4	Gross Vehicle Weight Rating	G = 5001-6000 lbs.
5	Vehicle Line	2= Grand Cherokee 4X2 (LHD) W = Grand Cherokee 4X4 (LHD)
6	Series	5 = Laredo 6 = Limited
7	Body Style	8 = 4dr Sport Utility
8	Engine	S = 4.0 Liter N = 4.7Liter
9	Check Digit	
10	Model Year	1=2001
11	Assembly Plant	C = Jefferson Assembly
12 thru 17	Vehicle Build Sequence	

VEHICLE SAFETY CERTIFICATION LABEL

DESCRIPTION

A vehicle safety certification label (Fig. 3) is attached to every Chrysler Corporation vehicle. The label certifies that the vehicle conforms to all applicable Federal Motor Vehicle Safety Standards. The label also lists:

- Month and year of vehicle manufacture.
- Gross Vehicle Weight Rating (GVWR). The gross front and rear axle weight ratings (GAWR's) are based on a minimum rim size and maximum cold tire inflation pressure.
- Vehicle Identification Number (VIN).
- Type of vehicle.
- Type of rear wheels.
- Bar code.
- Month, Day and Hour (MDH) of final assembly.
- Paint and Trim codes.
- Country of origin.

The label is located on the driver-side door shut-face.

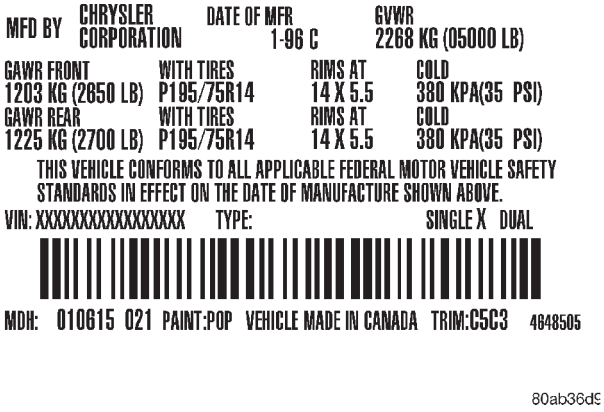

Fig. 3 Vehicle Safety Certification Label

LUBRICATION & MAINTENANCE

TABLE OF CONTENTS

page

INTERNATIONAL SYMBOLS
DESCRIPTION 1
PARTS & LUBRICANT RECOMMENDATION
STANDARD PROCEDURE 1
FLUID TYPES
DESCRIPTION 2
OPERATION 4
SPECIFICATIONS 4
FLUID CAPACITIES
SPECIFICATIONS 6
FLUID FILL/CHECK LOCATIONS
DESCRIPTION 6
INSPECTION 6
MAINTENANCE SCHEDULES
DESCRIPTION 6
LIFT POINTS
STANDARD PROCEDURE 12
HOISTING AND JACKING RECOMMENDATIONS. 12
JUMP STARTING
STANDARD PROCEDURE 13
EMERGENCY TOW HOOKS
DESCRIPTION 14
TOWING
STANDARD PROCEDURE 14

INTERNATIONAL SYMBOLS

DESCRIPTION

DaimlerChrysler Corporation uses international symbols to identify engine compartment lubricant and fluid inspection and fill locations (Fig. 1).

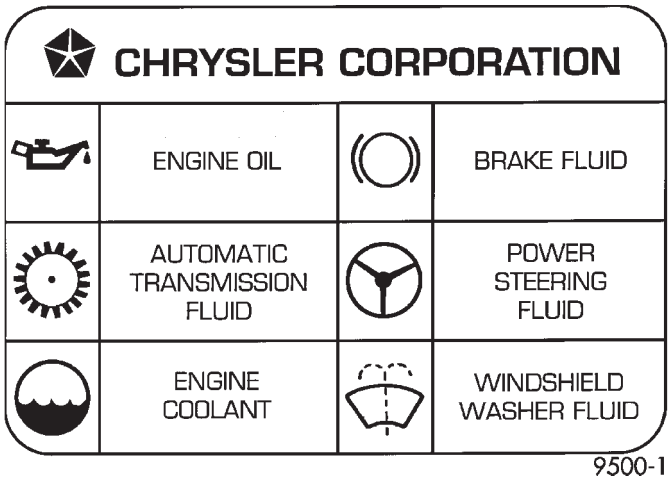

Fig. 1 International Symbols

PARTS & LUBRICANT RECOMMENDATION

STANDARD PROCEDURES

Lubricating grease is rated for quality and usage by the NLGI. All approved products have the NLGI symbol (Fig. 2) on the label. At the bottom NLGI symbol is the usage and quality identification letters. Wheel bearing lubricant is identified by the letter “G”. Chassis lubricant is identified by the latter “L”. The letter following the usage letter indicates the quality of the lubricant. The following symbols indicate the highest quality.

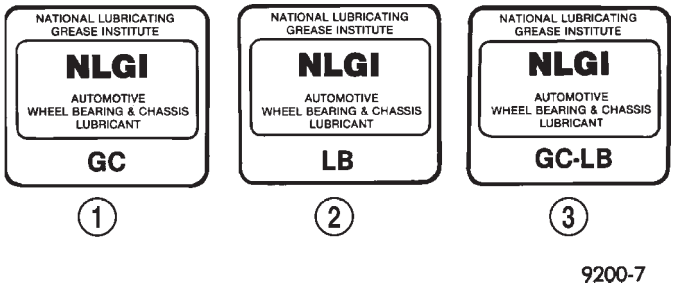

Fig. 2 NLGI Symbol

1 - WHEEL BEARINGS
2 - CHASSIS LUBRICATION
3 - CHASSIS AND WHEEL BEARINGS

When service is required, DaimlerChrysler Corporation recommends that only Mopar® brand parts, lubricants and chemicals be used. Mopar provides the best engineered products for servicing DaimlerChrysler Corporation vehicles.

FLUID TYPES

DESCRIPTION

ETHYLENE-GLYCOL MIXTURES

CAUTION: Richer antifreeze mixtures cannot be measured with normal field equipment and can cause problems associated with 100 percent ethylene-glycol.

The required ethylene-glycol (antifreeze) and water mixture depends upon the climate and vehicle operating conditions. The recommended mixture of 50/50 ethylene-glycol and water will provide protection against freezing to -37 deg. C (-35 deg. F). The antifreeze concentration **must always** be a minimum of 44 percent, year-round in all climates. **If percentage is lower than 44 percent, engine parts may be eroded by cavitation, and cooling system components may be severely damaged by corrosion.** Maximum protection against freezing is provided with a 68 percent antifreeze concentration, which prevents freezing down to -67.7 deg. C (-90 deg. F). A higher percentage will freeze at a warmer temperature. Also, a higher percentage of antifreeze can cause the engine to overheat because the specific heat of antifreeze is lower than that of water.

Use of 100 percent ethylene-glycol will cause formation of additive deposits in the system, as the corrosion inhibitive additives in ethylene-glycol require the presence of water to dissolve. The deposits act as insulation, causing temperatures to rise to as high as 149 deg. C (300) deg. F). This temperature is hot enough to melt plastic and soften solder. The increased temperature can result in engine detonation. In addition, 100 percent ethylene-glycol freezes at 22 deg. C (-8 deg. F).

PROPYLENE-GLYCOL MIXTURES

It's overall effective temperature range is smaller than that of ethylene-glycol. The freeze point of 50/50 propylene-glycol and water is -32 deg. C (-26 deg. F). 5 deg. C higher than ethylene-glycol's freeze point. The boiling point (protection against summer boil-over) of propylene-glycol is 125 deg. C (257 deg. F) at 96.5 kPa (14 psi), compared to 128 deg. C (263 deg. F) for ethylene-glycol. Use of propylene-glycol can result in boil-over or freeze-up on a cooling system designed for ethylene-glycol. Propylene glycol also has poorer heat transfer characteristics than ethylene glycol. This can increase cylinder head temperatures under certain conditions.

Propylene-glycol/ethylene-glycol Mixtures can cause the destabilization of various corrosion inhibitors, causing damage to the various cooling system components. Also, once ethylene-glycol and propylene-glycol based coolants are mixed in the vehicle, conventional methods of determining freeze point will not be accurate. Both the refractive index and specific gravity differ between ethylene glycol and propylene glycol.

ENGINE OIL

WARNING: NEW OR USED ENGINE OIL CAN BE IRRITATING TO THE SKIN. AVOID PROLONGED OR REPEATED SKIN CONTACT WITH ENGINE OIL. CONTAMINANTS IN USED ENGINE OIL, CAUSED BY INTERNAL COMBUSTION, CAN BE HAZARDOUS TO YOUR HEALTH. THOROUGHLY WASH EXPOSED SKIN WITH SOAP AND WATER. DO NOT WASH SKIN WITH GASOLINE, DIESEL FUEL, THINNER, OR SOLVENTS, HEALTH PROBLEMS CAN RESULT. DO NOT POLLUTE, DISPOSE OF USED ENGINE OIL PROPERLY. CONTACT YOUR DEALER OR GOVERNMENT AGENCY FOR LOCATION OF COLLECTION CENTER IN YOUR AREA.

API SERVICE GRADE CERTIFIED

Use an engine oil that is API Service Grade Certified. MOPAR® provides engine oils that conform to this service grade.

SAE VISCOSITY

An SAE viscosity grade is used to specify the viscosity of engine oil. Use only engine oils with multiple viscosities such as 5W-30 or 10W-30. These are specified with a dual SAE viscosity grade which indicates the cold-to-hot temperature viscosity range. Select an engine oil that is best suited to your particular temperature range and variation (Fig. 3).

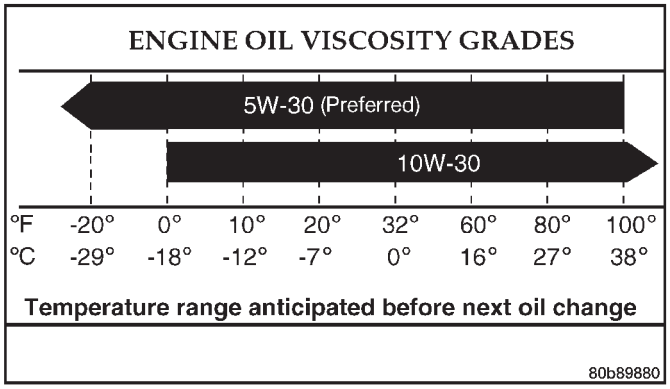

Fig. 3 Temperature/Engine Oil Viscosity

ENERGY CONSERVING OIL

An Energy Conserving type oil is recommended for gasoline engines. The designation of ENERGY CONSERVING is located on the label of an engine oil container.

FLUID TYPES (Continued)

CONTAINER IDENTIFICATION

Standard engine oil identification notations have been adopted to aid in the proper selection of engine oil. The identifying notations are located on the label of engine oil plastic bottles and the top of engine oil cans (Fig. 4).

9400-9

Fig. 4 Engine Oil Container Standard Notations

DESCRIPTION - ENGINE OIL

WARNING: NEW OR USED ENGINE OIL CAN BE IRRITATING TO THE SKIN. AVOID PROLONGED OR REPEATED SKIN CONTACT WITH ENGINE OIL. CONTAMINANTS IN USED ENGINE OIL, CAUSED BY INTERNAL COMBUSTION, CAN BE HAZARDOUS TO YOUR HEALTH. THOROUGHLY WASH EXPOSED SKIN WITH SOAP AND WATER. DO NOT WASH SKIN WITH GASOLINE, DIESEL FUEL, THINNER, OR SOLVENTS, HEALTH PROBLEMS CAN RESULT. DO NOT POLLUTE, DISPOSE OF USED ENGINE OIL PROPERLY. CONTACT YOUR DEALER OR GOVERNMENT AGENCY FOR LOCATION OF COLLECTION CENTER IN YOUR AREA.

API SERVICE GRADE CERTIFIED

Use an engine oil that is API Service Grade Certified. MOPAR® provides engine oils that conform to this service grade.

SAE VISCOSITY

An SAE viscosity grade is used to specify the viscosity of engine oil. Use only engine oils with multiple viscosities such as 5W-30 or 10W-30. These oils are specified with a dual SAE viscosity grade which indicates the cold-to-hot temperature viscosity range. Select an engine oil that is best suited to your particular temperature range and variation (Fig. 5).

ENERGY CONSERVING OIL

An Energy Conserving type oil is recommended for gasoline engines. The designation of ENERGY CONSERVING is located on the label of an engine oil container.

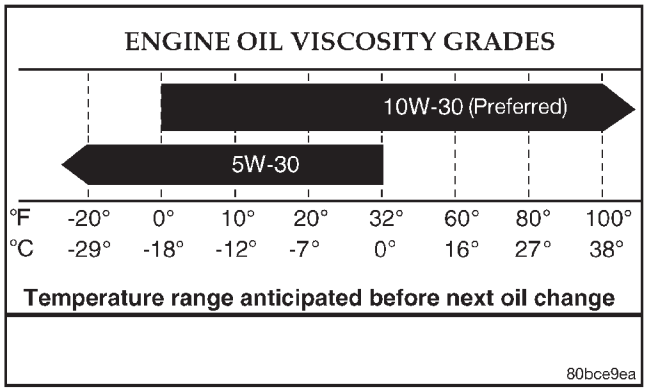

Fig. 5 Temperature/Engine Oil Viscosity - 3.2/3.5L Engine

CONTAINER IDENTIFICATION

Standard engine oil identification notations have been adopted to aid in the proper selection of engine oil. The identifying notations are located on the label of engine oil plastic bottles and the top of engine oil cans (Fig. 6).

9400-9

Fig. 6 API Symbol

DESCRIPTION

A multi-purpose, hypoid gear lubricant which conforms to the following specifications should be used. Mopar Hypoid Gear Lubricant conforms to all of these specifications.

FRONT AXLE

- The lubricant should have MIL-L-2105C and API GL 5 quality specifications.
- Lubricant is SAE 75W-140 SYNTHETIC gear lubricant.

REAR AXLE

- The lubricant should have MIL-L-2105C and API GL 5 quality specifications.
- Lubricant is a thermally stable SAE 80W-90 gear lubricant.
- Lubricant for axles intended for heavy-duty or trailer tow use is SAE 75W-140 SYNTHETIC gear lubricant.

FLUID TYPES (Continued)

NOTE: Trac-lok™ and Vari-lok™ equipped axles require a friction modifier be added to the lubricant.

CAUTION: If axle is submerged in water, lubricant must be replaced immediately to avoid possible premature axle failure.

DESCRIPTION - TRANSFER CASE - NV242

Recommended lubricant for the NV242 transfer case is Mopar® ATF +4, type 9602 Automatic Transmission Fluid.

DESCRIPTION - TRANSFER CASE - NV247

Mopar® Transfer Case Lubricant (P/N 05016796) is the only lubricant recommended for the NV247 transfer case.

DESCRIPTION - AUTOMATIC TRANSMISSION FLUID

NOTE: Refer to the maintenance schedules in this group for the recommended maintenance (fluid/filter change) intervals for this transmission.

NOTE: Refer to Service Procedures in this group for fluid level checking procedures.

Mopar® ATF Plus 4, Type 9602, automatic transmission fluid is the recommended fluid for DaimlerChrysler automatic transmissions.

Dexron II fluid IS NOT recommended. Clutch chatter can result from the use of improper fluid.

Mopar® ATF Plus 4, Type 9602, automatic transmission fluid when new is red in color. The ATF is dyed red so it can be identified from other fluids used in the vehicle such as engine oil or antifreeze. The red color is not permanent and is not an indicator of fluid condition. As the vehicle is driven, the ATF will begin to look darker in color and may eventually become brown. **This is normal.** A dark brown/black fluid accompanied with a burnt odor and/or deterioration in shift quality may indicate fluid deterioration or transmission component failure.

FLUID ADDITIVES

DaimlerChrysler strongly recommends against the addition of any fluids to the transmission, other than those automatic transmission fluids listed above. Exceptions to this policy are the use of special dyes to aid in detecting fluid leaks.

Various “special” additives and supplements exist that claim to improve shift feel and/or quality. These additives and others also claim to improve converter clutch operation and inhibit overheating, oxidation, varnish, and sludge. These claims have not been supported to the satisfaction of DaimlerChrysler and these additives **must not be used.** The use of transmission “sealers” should also be avoided, since they may adversely affect the integrity of transmission seals.

OPERATION - AUTOMATIC TRANSMISSION FLUID

The automatic transmission fluid is selected based upon several qualities. The fluid must provide a high level of protection for the internal components by providing a lubricating film between adjacent metal components. The fluid must also be thermally stable so that it can maintain a consistent viscosity through a large temperature range. If the viscosity stays constant through the temperature range of operation, transmission operation and shift feel will remain consistent. Transmission fluid must also be a good conductor of heat. The fluid must absorb heat from the internal transmission components and transfer that heat to the transmission case.

SPECIFICATIONS

FUEL REQUIREMENTS

Your engine is designed to meet all emissions regulations and provide excellent fuel economy and performance when using high quality unleaded “regular” gasoline having an octane rating of 87. The routine use of premium gasoline is not recommended. Under normal conditions the use of premium fuel will not provide a benefit over high quality regular gasolines and in some circumstances may result in poorer performance.

Light spark knock at low engine speeds is not harmful to your engine. However, continued heavy spark knock at high speeds can cause damage and immediate service is required. Engine damage resulting from operation with a heavy spark knock may not be covered by the new vehicle warranty.

Poor quality gasoline can cause problems such as hard starting, stalling and hesitations. If you experience these symptoms, try another brand of gasoline before considering service for the vehicle.

Over 40 auto manufacturers world-wide have issued and endorsed consistent gasoline specifications (the Worldwide Fuel Charter, WWFC) to define fuel properties necessary to deliver enhanced emissions, performance and durability for your vehicle. We recommend the use of gasolines that meet the WWFC specifications if they are available.

SPECIFICATIONS (Continued)

REFORMULATED GASOLINE

Many areas of the country require the use of cleaner burning gasoline referred to as "reformulated" gasoline. Reformulated gasoline contain oxygenates, and are specifically blended to reduce vehicle emissions and improve air quality.

We strongly support the use of reformulated gasoline. Properly blended reformulated gasoline will provide excellent performance and durability for the engine and fuel system components.

GASOLINE/OXYGENATE BLENDS

Some fuel suppliers blend unleaded gasoline with oxygenates such as 10% ethanol, MTBE, and ETBE. Oxygenates are required in some areas of the country during the winter months to reduce carbon monoxide emissions. Fuels blended with these oxygenates may be used in your vehicle.

CAUTION: DO NOT use gasoline containing METHANOL. Gasoline containing methanol may damage critical fuel system components.

MMT IN GASOLINE

MMT is a manganese-containing metallic additive that is blended into some gasoline to increase octane. Gasoline blended with MMT provide no performance advantage beyond gasoline of the same octane number without MMT. Gasoline blended with MMT reduce spark plug life and reduce emission system performance in some vehicles. We recommend that gasolines free of MMT be used in your vehicle. The MMT content of gasoline may not be indicated on the gasoline pump; therefore, you should ask your gasoline retailer whether or not his/her gasoline contains MMT.

It is even more important to look for gasoline without MMT in Canada because MMT can be used at levels higher than allowed in the United States. MMT is prohibited in Federal and California reformulated gasoline.

SULFUR IN GASOLINE

If you live in the northeast United States, your vehicle may have been designed to meet California low emission standards with Cleaner-Burning California reformulated gasoline with low sulfur. If such fuels are not available in states adopting California emission standards, your vehicles will operate satisfactorily on fuels meeting federal specifications, but emission control system performance may be adversely affected. Gasoline sold outside of California is permitted to have higher sulfur levels which may affect the performance of the vehicle's catalytic converter. This may cause the Malfunction Indicator Lamp (MIL), Check Engine or Service Engine Soon light to illuminate. We recommend that you try a different brand of unleaded gasoline having lower sulfur to determine if the problem is fuel related prior to returning your vehicle to an authorized dealer for service.

CAUTION: If the Malfunction Indicator Lamp (MIL), Check Engine or Service Engine Soon light is flashing, immediate service is required; see on-board diagnostics system section.

MATERIALS ADDED TO FUEL

All gasoline sold in the United States and Canada are required to contain effective detergent additives. Use of additional detergents or other additives is not needed under normal conditions.

FUEL SYSTEM CAUTIONS

CAUTION: Follow these guidelines to maintain your vehicle's performance:

- The use of leaded gas is prohibited by Federal law. Using leaded gasoline can impair engine performance, damage the emission control system, and could result in loss of warranty coverage.
- An out-of-tune engine, or certain fuel or ignition malfunctions, can cause the catalytic converter to overheat. If you notice a pungent burning odor or some light smoke, your engine may be out of tune or malfunctioning and may require immediate service. Contact your dealer for service assistance.
- When pulling a heavy load or driving a fully loaded vehicle when the humidity is low and the temperature is high, use a premium unleaded fuel to help prevent spark knock. If spark knock persists, lighten the load, or engine piston damage may result.
- The use of fuel additives which are now being sold as octane enhancers is not recommended. Most of these products contain high concentrations of methanol. Fuel system damage or vehicle performance problems resulting from the use of such fuels or additives is not the responsibility of DaimlerChrysler Corporation and may not be covered under the new vehicle warranty.

NOTE: Intentional tampering with emissions control systems can result in civil penalties being assessed against you.

FLUID CAPACITIES

SPECIFICATIONS

SPECIFICATIONS - FLUID CAPACITIES

DESCRIPTION	SPECIFICATION
FUEL TANK	20 U.S. Gallons (76 Liters)****
Engine Oil - with Filter - 4.0L	5.7L (6.0 qts.)
Engine Oil - with Filter - 4.7L	5.7L (6.0 qts.)
Cooling System - 4.0L	14.1L (15 qts.)***
Cooling System - 4.7L	13.7L (14.5 qts.)***
Power Steering	
AUTOMATIC TRANSMISSION	
Service Fill - 42RE	3.8L (4.0 qts)
O-haul Fill - 42RE	9.1-9.5L (19-20 pts)
O-haul Fill - 45RFE	13.33L (28.0 pts.)
TRANSFER CASE	
NV242	1.35L (2.85 pts.)
NV247	1.6L (3.4 pts.)
FRONT AXLE	
Model 186 FBI	1.18L (2.5 pts.)
* When equipped with Vari-Lok, include 0.07L (0.15 pts.) of Friction Modifier.	
REAR AXLE	
Model 194 RBI	1.66L (3.5 pts.)*
Model 226 RBA	2.24L (4.75 pts.)**
* When equipped with Trac-lok, include 2.5 ounces of Friction Modifier.	
** When equipped with Trac-lok or Vari-Lok, include 2.5 ounces of Friction Modifier.	
*** Includes 0.9L (1.0 qts.) for coolant reservoir.	
****Nominal refill capacities are shown. A variation may be observed from vehicle to vehicle due to manufacturing tolerance and refill procedure.	

FLUID FILL/CHECK LOCATIONS

DESCRIPTION - TRANSFER CASE

The fill and drain plugs are both in the rear case (Fig. 7). Correct fill level is to the bottom edge of the fill plug hole. Be sure the vehicle is level to ensure an accurate fluid level check.

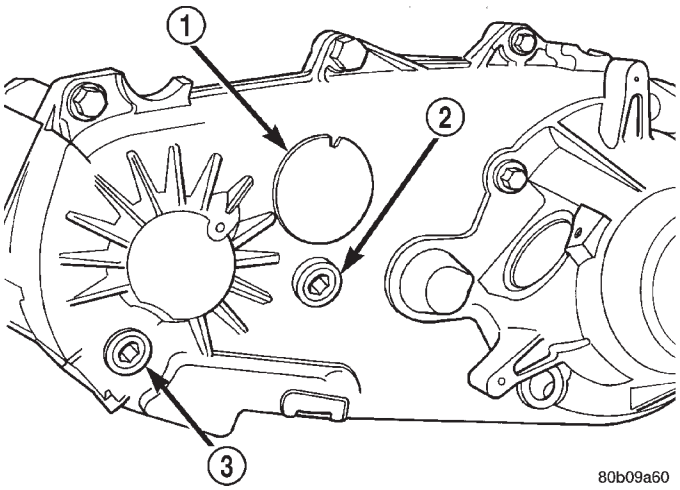

Fig. 7 Fill/Drain Plug

1 - I.D. TAG
2 - FILL PLUG
3 - DRAIN PLUG

INSPECTION

The fluid fill/check locations and lubrication points are located in each applicable group.

MAINTENANCE SCHEDULES

DESCRIPTION

There are two maintenance schedules that show proper service for the Grand Cherokee.

First is Schedule **"A"**. It lists all the scheduled maintenance to be performed under "normal" operating conditions.

Second is Schedule**"B"** . It is a schedule for vehicles that are operated under the following conditions:

- Frequent short trip driving less than 5 miles (8 km)
- Frequent driving in dusty conditions
- Extensive idling
- Trailer towing
- Sustained high speed operation
- Off road driving
- Desert operation
- Frequent starting and stopping
- Cold climate operation
- Commercial service

Use the schedule that best describes the driving conditions.

Where time and mileage are listed, follow the interval that occurs first.

EMISSION CONTROL SYSTEM MAINTENANCE

The scheduled emission maintenance listed in **bold type**on the Maintenance Schedules, must be done at the mileage specified to assure the continued proper

MAINTENANCE SCHEDULES (Continued)

functioning of the emission control system. These, and all other maintenance services included in this manual, should be done to provide the best vehicle performance and reliability. More frequent maintenance may be needed for vehicles in severe operating conditions such as dusty areas and very short trip driving.

UNSCHEDULED INSPECTION

AT EACH STOP FOR FUEL

- Check engine oil level, add as required.
- Check windshield washer solvent and add if required.

ONCE A MONTH

- Check tire pressure (including spare) and look for unusual wear or damage.
- Inspect battery and clean and tighten terminals as required.
- Check fluid levels of coolant reservoir, power steering and transmission and add as needed.

AT EACH OIL CHANGE

- Inspect exhaust system.
- Inspect brake hoses.
- Rotate the tires at each oil change interval shown on Schedule—A (7,500 miles) or every other interval shown on Schedule—B (6,000 miles).
- Check coolant level, hoses and clamps.
- Lubricate suspension ball joints.
- After completion of off-road (4WD) operation, the underside of the vehicle should be thoroughly inspected. Examine threaded fasteners for looseness.

MAINTENANCE SCHEDULES

SCHEDULE—A

NOTE: Where both time and mileage are indicated, follow the interval which occurs first.

7,500 miles (12 000 km) or at 6 months

- Change engine oil.
- Replace engine oil filter.
- Inspect engine coolant level, hoses, clamps.
- Inspect brake hoses.
- Inspect exhaust system.

15,000 Miles (24 000 km) or at 12 months

- Change engine oil.
- Replace engine oil filter.
- Inspect engine coolant level, hoses, clamps.
- Inspect brake hoses.
- Inspect exhaust system.
- Lubricate upper knuckle ball stud.

22,500 Miles (36 000 km) or at 18 months

- Change engine oil.
- Replace engine oil filter.
- Inspect engine coolant level, hoses, clamps.
- Inspect brake linings.
- Clean and lubricate brake caliper pins.
- Inspect brake hoses.
- Inspect exhaust system.

30,000 Miles (48 000 km) or at 24 months

- Change engine oil.
- Replace engine oil filter.
- **Replace engine air cleaner element.**
- **Replace spark plugs.**
- Drain and refill transfer case fluid.
- Lubricate upper knuckle ball stud.
- Inspect engine coolant level, hoses, clamps.
- Inspect brake hoses.
- Inspect exhaust system.

37,500 Miles (60 000 km) or at 30 months

- Change engine oil.
- Replace engine oil filter.
- Inspect engine coolant level, hoses, clamps.
- Inspect brake hoses.
- Inspect exhaust system.

45,000 Miles (72 000 km) or at 36 months

- Change engine oil.
- Replace engine oil filter.
- Inspect engine coolant level, hoses, clamps.
- Inspect brake hoses.
- Inspect brake linings.
- Clean and lubricate brake caliper pins.
- Flush and replace engine coolant at 36 months or 52,500 Miles (84 000 km).
- Lubricate upper knuckle ball stud.
- Inspect exhaust system.

52,500 Miles (84 000 km) or at 42 months

- Change engine oil.
- Replace engine oil filter.
- Inspect engine coolant level, hoses, clamps.
- Inspect brake hoses.
- Inspect exhaust system.

60,000 Miles (96 000 km) or at 48 months

- Change engine oil.
- Replace engine oil filter.
- Inspect engine coolant level, hoses, clamps.
- **Replace engine air cleaner element.**
- **Replace spark plugs.**
- **Inspect PCV valve and replace if necessary (4.7L only).***
- Inspect brake hoses.

MAINTENANCE SCHEDULES (Continued)

- Inspect and replace drive belt if necessary (4.0L).
- Drain and replace brake fluid.
- Drain and refill transfer case fluid.
- Lubricate upper knuckle ball stud.
- Inspect exhaust system.

67,500 Miles (108 000 km) or at 54 months

- Change engine oil.
- Replace engine oil filter.
- Inspect engine coolant level, hoses, clamps.
- Inspect brake linings
- Inspect brake hoses.
- Clean and lubricate brake caliper pins.
- Inspect exhaust system.

75,000 Miles (120 000 km) or at 60 months

- Change engine oil.
- Replace engine oil filter.
- Inspect engine coolant level, hoses, clamps.
- Flush and replace engine coolant if it has been 30,000 miles (48 000 km) or 24 months since last change.
- Inspect and replace drive belt if necessary (4.0L).**
- Inspect brake hoses.
- Inspect exhaust system.
- Lubricate upper knuckle ball stud.

82,500 Miles (132 000 km) or at 66 months

- Change engine oil.
- Replace engine oil filter.
- Inspect engine coolant level, hoses, clamps.
- Flush and replace engine coolant if it has been 30,000 miles (48 000 km) or 24 months since last change.
- Inspect brake hoses.
- Inspect exhaust system.

90,000 Miles (144 000 km) or at 72 months

- Change engine oil.
- Replace engine oil filter.
- Inspect engine coolant level, hoses, clamps.
- **Replace engine air cleaner element.**
- **Replace spark plugs.**
- **Inspect PCV valve and replace if necessary (4.7L only).***
- Inspect and replace drive (4.0L and 4.7L).**
- Drain and refill transfer case fluid.
- Inspect brake hoses.
- Inspect brake linings.
- Clean and lubricate brake caliper pins.
- Lubricate upper knuckle ball stud.
- Inspect exhaust system.

97,500 Miles (156 000 km) or at 78 months

- Change engine oil.
- Replace engine oil filter.
- Inspect engine coolant level, hoses, clamps.
- Inspect brake hoses.
- Inspect exhaust system.

100,000 Miles (160 000 km)

- Drain and refill automatic transmission fluid and change filter (except 45RFE & 545RFE applications).
- Adjust bands (except 45RFE & 545RFE applications).
- Drain and refill automatic transmission fluid and change main sump filter in 45RFE & 545RFE applications.
- Change spin-on cooler return filter in 45RFE & 545RFE appications.

105,000 Miles (168 000 km) or at 84 months

- Change engine oil.
- Replace engine oil filter.
- Inspect engine coolant level, hoses, clamps.
- Flush and replace engine coolant if it has been 30,000 miles (48 000 km) or 24 months since last change.
- Inspect and replace drive belt (4.0L and 4.7L).**
- Inspect brake hoses.
- Lubricate upper knuckle ball stud.
- Inspect exhaust system.

112,500 Miles (180 000 km) or at 90 months

- Change engine oil.
- Replace engine oil filter.
- Inspect engine coolant level, hoses, clamps.
- Flush and replace engine coolant if it has been 30,000 miles (48 000 km) or 24 months since last change.
- Inspect brake hoses.
- Inspect brake linings.
- Clean and lubricate brake caliper pins.
- Inspect exhaust system.

120,000 Miles (192 000 km) or at 96 months

- Change engine oil.
- Replace engine oil filter.
- Inspect engine coolant level, hoses, clamps.
- **Replace engine air cleaner element.**
- **Replace spark plugs.**
- **Inspect PCV valve and replace if necessary (4.7L only).***
- Inspect and replace drive belt (4.0L and 4.7L).**
- Inspect brake hoses.
- Drain and replace brake fluid.
- Drain and refill transfer case fluid.

MAINTENANCE SCHEDULES (Continued)

- Lubricate upper knuckle ball stud.
- Inspect exhaust system.

NOTE: Inspection and service should also be performed anytime a malfunction is observed or suspected.

*This maintenance is recommended, but is not required to maintain warranty on the PCV valve.

**This maintenance is not required if the belt was previously replaced.

SCHEDULE—B

NOTE: Where both time and mileage are indicated, follow the interval which occurs first.

3,000 Miles (5 000 km)

- Change engine oil.
- Replace engine oil filter.
- Inspect engine coolant level, hoses, clamps.
- Inspect brake hoses.
- Inspect exhaust system.

6,000 Miles (10 000 km)

- Change engine oil.
- Replace engine oil filter.
- Inspect engine coolant level, hoses, clamps.
- Inspect brake hoses.
- Lubricate upper knuckle ball stud.
- Inspect exhaust system.

9,000 Miles (14 000 km)

- Change engine oil.
- Replace engine oil filter.
- Inspect engine coolant level, hoses, clamps.
- Inspect brake hoses.
- Inspect exhaust system.

12,000 Miles (19 000 km)

- Change engine oil.
- Replace engine oil filter.
- Inspect engine coolant level, hoses, clamps.
- Drain and refill front and rear axles.
- Inspect brake linings.
- Clean and lubricate brake caliper pins.
- Inspect brake hoses.
- Lubricate upper knuckle ball stud.
- Inspect exhaust system.

15,000 miles (24 000 km)

- Change engine oil.
- Replace engine oil filter.
- Inspect engine coolant level, hoses, clamps.
- **Inspect engine air cleaner element, replace as necessary.**
- Inspect brake hoses.
- Inspect exhaust system.

18,000 Miles (29 000 km)

- Change engine oil.
- Replace engine oil filter.
- Inspect engine coolant level, hoses, clamps.
- Inspect brake hoses.
- Inspect exhaust system.
- Lubricate upper knuckle ball stud.

21,000 Miles (34 000 km)

- Change engine oil.
- Replace engine oil filter.
- Inspect engine coolant level, hoses, clamps.
- Inspect brake hoses.
- Inspect exhaust system.

24,000 Miles (38 000 km)

- Change engine oil.
- Replace engine oil filter.
- Inspect engine coolant level, hoses, clamps.
- Drain and refill front and rear axles.
- Inspect brake linings.
- Clean and lubricate brake caliper pins.
- Inspect brake hoses.
- Lubricate upper knuckle ball stud.
- Inspect exhaust system.

27,000 Miles (43 000 km)

- Change engine oil.
- Replace engine oil filter.
- Inspect engine coolant level, hoses, clamps.
- Inspect brake hoses.
- Inspect exhaust system.

30,000 Miles (48 000 km)

- Change engine oil.
- Replace engine oil filter.
- Inspect engine coolant level, hoses, clamps.
- **Replace engine air cleaner element.**
- **Replace spark plugs.**
- **Inspect PCV valve and replace if necessary (4.7L only).***
- Inspect brake hoses.
- Drain and refill automatic transmission fluid and change filter (except 45RFE & 545RFE applications).
- Adjust bands (except 45RFE & 545RFE applications).
- Drain and refill automatic transmission fluid and change main sump filter in 45RFE & 545RFE applications.
- Drain and refill transfer case fluid.
- Lubricate upper knuckle ball stud.
- Inspect exhaust system.

MAINTENANCE SCHEDULES (Continued)

33,000 Miles (53 000 km)

- Change engine oil.
- Replace engine oil filter.
- Inspect engine coolant level, hoses, clamps.
- Inspect brake hoses.
- Inspect exhaust system.

36,000 Miles (58 000 km)

- Change engine oil.
- Replace engine oil filter.
- Inspect engine coolant level, hoses, clamps.
- Drain and refill front and rear axles.
- Inspect brake linings.
- Clean and lubricate brake caliper pins.
- Inspect brake hoses.
- Lubricate upper knuckle ball stud.
- Inspect exhaust system.

39,000 Miles (62 000 km)

- Change engine oil.
- Replace engine oil filter.
- Inspect engine coolant level, hoses, clamps.
- Inspect brake hoses.
- Inspect exhaust system.

42,000 Miles (67 000 km)

- Change engine oil.
- Replace engine oil filter.
- Inspect engine coolant level, hoses, clamps.
- Inspect brake hoses.
- Lubricate upper knuckle ball stud.
- Inspect exhaust system.

45,000 Miles (72 000 km)

- Change engine oil.
- Replace engine oil filter.
- Inspect engine coolant level, hoses, clamps.
- Inspect and replace drive belt if necessary (4.0L only).
- **Inspect engine air cleaner element, replace as necessary.**
- Inspect brake hoses.
- Inspect exhaust system.

48,000 Miles (77 000 km)

- Change engine oil.
- Replace engine oil filter.
- Inspect engine coolant level, hoses, clamps.
- Drain and refill front and rear axles.
- Inspect brake linings.
- Clean and lubricate brake caliper pins.
- Inspect brake hoses.
- Lubricate upper knuckle ball stud.
- Inspect exhaust system.

51,000 Miles (82 000 km)

- Change engine oil.
- Replace engine oil filter.
- Inspect engine coolant level, hoses, clamps.
- Flush and replace engine coolant.
- Inspect brake hoses.
- Inspect exhaust system.

54,000 Miles (86 000 km)

- Change engine oil.
- Replace engine oil filter.
- Inspect engine coolant level, hoses, clamps.
- Inspect brake hoses.
- Lubricate upper knuckle ball stud.
- Inspect exhaust system.

57,000 Miles (91 000 km)

- Change engine oil.
- Replace engine oil filter.
- Inspect engine coolant level, hoses, clamps.
- Inspect brake hoses.
- Inspect exhaust system.

60,000 Miles (96 000 km)

- Change engine oil.
- Replace engine oil filter.
- Inspect engine coolant level, hoses, clamps.
- **Replace engine air cleaner element.**
- **Inspect PCV valve and replace if necessary (4.7L only).***
- **Replace spark plugs.**
- Inspect and replace drive belt (4.0L only).**
- Drain and refill automatic transmission fluid and change filter (except 45RFE & 545RFE applications).
- Adjust bands (except 45RFE & 545RFE applications).
- Drain and refill automatic transmission fluid and change main sump filter in 45RFE & 545RFE applications.
- Drain and refill transfer case fluid.
- Drain and refill front and rear axles.
- Inspect brake hoses.
- Inspect brake linings.
- Drain and replace brake fluid.
- Clean and lubricate brake caliper pins.
- Lubricate upper knuckle ball stud.
- Inspect exhaust system.

63,000 Miles (101 000 km)

- Change engine oil.
- Replace engine oil filter.
- Inspect engine coolant level, hoses, clamps.
- Inspect brake hoses.
- Inspect exhaust system.

MAINTENANCE SCHEDULES (Continued)

66,000 Miles (106 000 km)

- Change engine oil.
- Replace engine oil filter.
- Inspect engine coolant level, hoses, clamps.
- Inspect brake hoses.
- Lubricate upper knuckle ball stud.
- Inspect exhaust system.

69,000 Miles (110 000 km)

- Change engine oil.
- Replace engine oil filter.
- Inspect engine coolant level, hoses, clamps.
- Inspect brake hoses.
- Inspect exhaust system.

72,000 Miles (115 000 km)

- Change engine oil.
- Replace engine oil filter.
- Inspect engine coolant level, hoses, clamps.
- Drain and refill front and rear axles.
- Inspect brake linings.
- Clean and lubricate brake caliper pins.
- Inspect brake hoses.
- Lubricate upper knuckle ball stud.
- Inspect exhaust system.

75,000 Miles (120 000 km)

- Change engine oil.
- Replace engine oil filter.
- Inspect engine coolant level, hoses, clamps.
- Inspect and replace drive belt(4.0L and 4.7L).**
- **Inspect engine air cleaner element, replace as necessary.**
- Inspect brake hoses.
- Inspect exhaust system.

78,000 Miles (125 000 km)

- Change engine oil.
- Replace engine oil filter.
- Inspect engine coolant level, hoses, clamps.
- Inspect brake hoses.
- Lubricate upper knuckle ball stud.
- Inspect exhaust system.

81,000 Miles (130 000 km)

- Change engine oil.
- Replace engine oil filter.
- Inspect engine coolant level, hoses, clamps.
- Flush and replace engine coolant.
- Inspect brake hoses.
- Inspect exhaust system.

84,000 miles (134 000 km)

- Change engine oil.
- Replace engine oil filter.
- Inspect engine coolant level, hoses, clamps.
- Drain and refill front and rear axles.
- Inspect brake linings.
- Clean and lubricate brake caliper pins.
- Inspect brake hoses.
- Lubricate upper knuckle ball stud.
- Inspect exhaust system.

87,000 Miles (139 000 km)

- Change engine oil.
- Replace engine oil filter.
- Inspect engine coolant level, hoses, clamps.
- Inspect brake hoses.
- Inspect exhaust system.

90,000 Miles (144 000 km)

- Change engine oil.
- Replace engine oil filter.
- Inspect engine coolant level, hoses, clamps.
- **Replace engine air cleaner element.**
- **Replace spark plugs.**
- **Inspect PCV valve and replace if necessary (4.7L only).***
- Inspect and replace drive (4.0L and 4.7L).**
- Drain and refill automatic transmission fluid and change filter (except 45RFE & 545RFE applications).
- Adjust bands (except 45RFE & 545RFE applications).
- Drain and refill automatic transmission fluid and change main sump filter in 45RFE & 545RFE applications.
- Change spin-on cooler return filter in 45RFE & 545RFE appications.
- Inspect brake hoses.
- Drain and refill transfer case fluid.
- Lubricate upper knuckle ball stud.
- Inspect exhaust system.

93,000 Miles (149 000 km)

- Change engine oil.
- Replace engine oil filter.
- Inspect engine coolant level, hoses, clamps.
- Inspect brake hoses.
- Inspect exhaust system.

96,000 Miles (154 000 km)

- Change engine oil.
- Replace engine oil filter.
- Inspect engine coolant level, hoses, clamps.
- Drain and refill front and rear axles.
- Inspect brake linings.
- Clean and lubricate brake caliper pins.
- Inspect brake hoses.
- Lubricate upper knuckle ball stud.
- Inspect exhaust system.

MAINTENANCE SCHEDULES (Continued)

99,000 Miles (158 000 km)

- Change engine oil.
- Replace engine oil filter.
- Inspect engine coolant level, hoses, clamps.
- Inspect brake hoses.
- Inspect exhaust system.

102,000 Miles (163 000 km)

- Change engine oil.
- Replace engine oil filter.
- Inspect engine coolant level, hoses, clamps.
- Inspect brake hoses.
- Lubricate upper knuckle ball stud.
- Inspect exhaust system.

105,000 Miles (168 000 km)

- Change engine oil.
- Replace engine oil filter.
- Inspect engine coolant level, hoses, clamps.
- **Inspect engine air cleaner element, replace as necessary.**
- Inspect and replace drive belt (4.0L and 4.7L).**
- Inspect brake hoses.
- Inspect exhaust system.

108,000 Miles (173 000 km)

- Change engine oil.
- Replace engine oil filter.
- Inspect engine coolant level, hoses, clamps.
- Drain and refill front and rear axles.
- Inspect brake linings.
- Clean and lubricate brake caliper pins.
- Inspect brake hoses.
- Lubricate upper knuckle ball stud.
- Inspect exhaust system.

111,000 Miles (178 000 km)

- Change engine oil.
- Replace engine oil filter.
- Inspect engine coolant level, hoses, clamps.
- Flush and replace engine coolant.
- Inspect brake hoses.
- Inspect exhaust system.

114,000 Miles (182 000 km)

- Change engine oil.
- Replace engine oil filter.
- Inspect engine coolant level, hoses, clamps.
- Inspect brake hoses.
- Lubricate upper knuckle ball stud.
- Inspect exhaust system.

117,000 Miles (187 000 km)

- Change engine oil.
- Replace engine oil filter.
- Inspect engine coolant level, hoses, clamps.
- Inspect brake hoses.
- Inspect exhaust system.

120,000 Miles (192 000 km)

- Change engine oil.
- Replace engine oil filter.
- Inspect engine coolant level, hoses, clamps.
- **Replace engine air cleaner element.**
- **Inspect PCV valve and replace if necessary (4.7L only).***
- **Replace spark plugs.**
- Inspect and replace drive belt (4.0L and 4.7L).**
- Drain and refill automatic transmission fluid and change filter (except 45RFE & 545RFE applications).
- Adjust bands (except 45RFE & 545RFE applications).
- Drain and refill automatic transmission fluid and change main sump filter in 45RFE & 545RFE applications.
- Drain and refill transfer case fluid.
- Drain and refill front and rear axles.
- Inspect brake hoses.
- Inspect brake linings.
- Drain and replace brake fluid.
- Clean and lubricate brake caliper pins.
- Lubricate upper knuckle ball stud.
- Inspect exhaust system.

NOTE: Inspection and service should also be performed anytime a malfunction is observed or suspected.

*This maintenance is recommended, but is not required to maintain warranty on the PCV valve.

**This maintenance is not required if the belt was previously replaced.

LIFT POINTS

STANDARD PROCEDURES - HOISTING AND JACKING RECOMMENDATIONS

FLOOR JACK

When properly positioned, a floor jack can be used to lift a WJ vehicle (Fig. 8). Support the vehicle in the raised position with jack stands at the front and rear ends of the frame rails.

CAUTION: Do not attempt to lift a vehicle with a floor jack positioned under:

- An axle tube.
- Aluminum differential.
- A body side sill.
- A steering linkage component.
- A drive shaft.

LIFT POINTS (Continued)

- The engine or transmission oil pan.
- The fuel tank.
- A front suspension arm.

HOIST

A vehicle can be lifted with:
- A single-post, frame-contact hoist.
- A twin-post, chassis hoist.
- A ramp-type, drive-on hoist.

NOTE: When a frame-contact type hoist is used, verify that the lifting pads are positioned properly (Fig. 8).

WARNING: THE HOISTING AND JACK LIFTING POINTS PROVIDED ARE FOR A COMPLETE VEHICLE. WHEN A CHASSIS OR DRIVETRAIN COMPONENT IS REMOVED FROM A VEHICLE, THE CENTER OF GRAVITY IS ALTERED MAKING SOME HOISTING CONDITIONS UNSTABLE. PROPERLY SUPPORT OR SECURE VEHICLE TO HOISTING DEVICE WHEN THESE CONDITIONS EXIST.

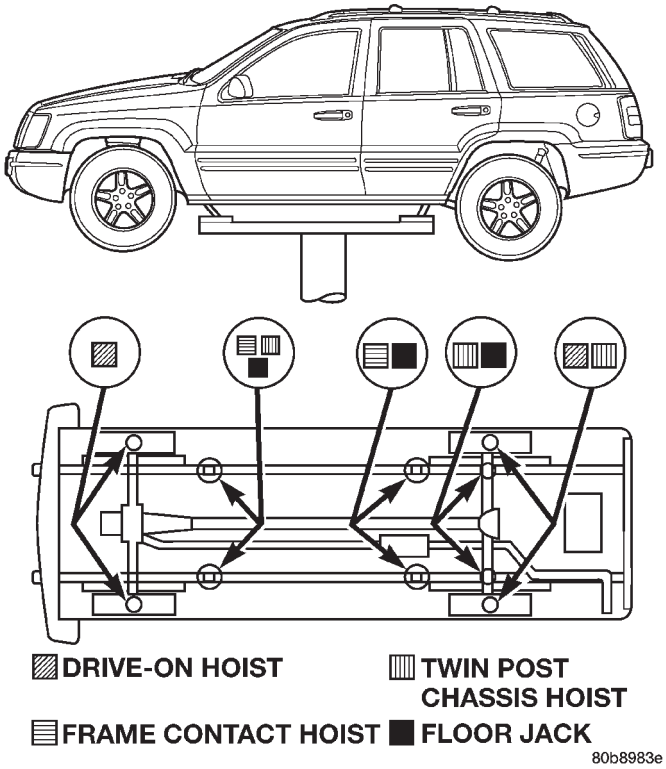

Fig. 8 Correct Vehicle Lifting Locations

JUMP STARTING

STANDARD PROCEDURE - JUMP STARTING PROCEDURE

WARNING: REVIEW ALL SAFETY PRECAUTIONS AND WARNINGS IN GROUP 8A, BATTERY/STARTING/CHARGING SYSTEMS DIAGNOSTICS. DO NOT JUMP START A FROZEN BATTERY, PERSONAL INJURY CAN RESULT. DO NOT JUMP START WHEN MAINTENANCE FREE BATTERY INDICATOR DOT IS YELLOW OR BRIGHT COLOR. DO NOT JUMP START A VEHICLE WHEN THE BATTERY FLUID IS BELOW THE TOP OF LEAD PLATES. DO NOT ALLOW JUMPER CABLE CLAMPS TO TOUCH EACH OTHER WHEN CONNECTED TO A BOOSTER SOURCE. DO NOT USE OPEN FLAME NEAR BATTERY. REMOVE METALLIC JEWELRY WORN ON HANDS OR WRISTS TO AVOID INJURY BY ACCIDENTAL ARCING OF BATTERY CURRENT. WHEN USING A HIGH OUTPUT BOOSTING DEVICE, DO NOT ALLOW BATTERY VOLTAGE TO EXCEED 16 VOLTS. REFER TO INSTRUCTIONS PROVIDED WITH DEVICE BEING USED.

CAUTION: When using another vehicle as a booster, do not allow vehicles to touch. Electrical systems can be damaged on either vehicle.

TO JUMP START A DISABLED VEHICLE:

(1) Raise hood on disabled vehicle and visually inspect engine compartment for:
- Battery cable clamp condition, clean if necessary.
- Frozen battery.
- Yellow or bright color test indicator, if equipped.
- Low battery fluid level.
- Generator drive belt condition and tension.
- Fuel fumes or leakage, correct if necessary.

CAUTION: If the cause of starting problem on disabled vehicle is severe, damage to booster vehicle charging system can result.

(2) When using another vehicle as a booster source, park the booster vehicle within cable reach. Turn off all accessories, set the parking brake, place the automatic transmission in PARK or the manual transmission in NEUTRAL and turn the ignition OFF.

JUMP STARTING (Continued)

(3) On disabled vehicle, place gear selector in park or neutral and set park brake. Turn off all accessories.

(4) Connect jumper cables to booster battery. RED clamp to positive terminal (+). BLACK clamp to negative terminal (-). DO NOT allow clamps at opposite end of cables to touch, electrical arc will result. Review all warnings in this procedure.

(5) On disabled vehicle, connect RED jumper cable clamp to positive (+) terminal. Connect BLACK jumper cable clamp to engine ground as close to the ground cable attaching point as possible (Fig. 9).

(6) Start the engine in the vehicle which has the booster battery, let the engine idle a few minutes, then start the engine in the vehicle with the discharged battery.

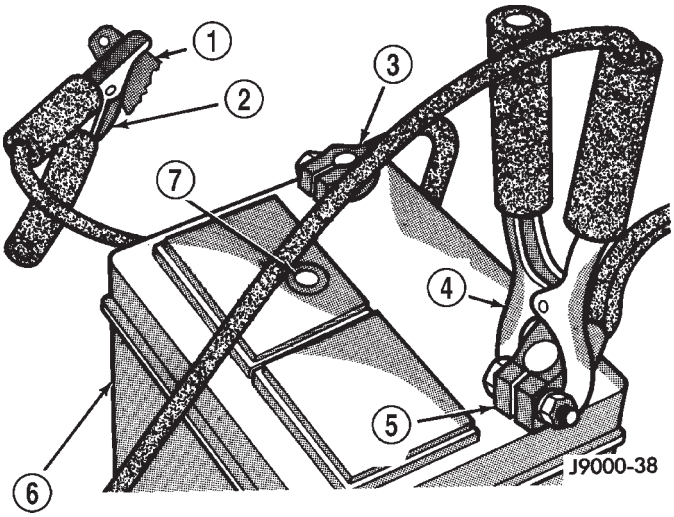

Fig. 9 Jumper Cable Clamp Connections

1 - ENGINE GROUND
2 - NEGATIVE JUMPER CABLE
3 - BATTERY NEGATIVE CABLE
4 - POSITIVE JUMPER CABLE
5 - BATTERY POSITIVE CABLE
6 - BATTERY
7 - TEST INDICATOR

CAUTION: Do not crank starter motor on disabled vehicle for more than 15 seconds, starter will overheat and could fail.

(7) Allow battery in disabled vehicle to charge to at least 12.4 volts (75% charge) before attempting to start engine. If engine does not start within 15 seconds, stop cranking engine and allow starter to cool (15 min.), before cranking again.

DISCONNECT CABLE CLAMPS AS FOLLOWS:

- Disconnect BLACK cable clamp from engine ground on disabled vehicle.
- When using a Booster vehicle, disconnect BLACK cable clamp from battery negative terminal. Disconnect RED cable clamp from battery positive terminal.
- Disconnect RED cable clamp from battery positive terminal on disabled vehicle.

EMERGENCY TOW HOOKS

DESCRIPTION

WARNING: REMAIN AT A SAFE DISTANCE FROM A VEHICLE THAT IS BEING TOWED VIA ITS TOW HOOKS. THE TOW STRAPS/CHAINS COULD BREAK AND CAUSE SERIOUS INJURY.

Some Jeep vehicles are equipped with front emergency tow hooks (Fig. 10). The tow hooks should be used for **EMERGENCY**purposes only.

CAUTION: DO NOT use emergency tow hooks for tow truck hook-up or highway towing.

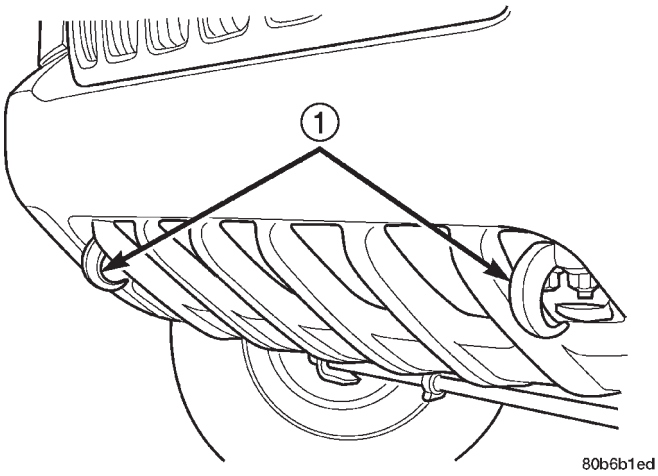

Fig. 10 Emergency Tow Hooks

1 - TOW HOOK

TOWING

STANDARD PROCEDURES

A vehicle equipped with SAE approved wheel lift-type towing equipment can be used to tow WJ vehicles. When towing a 4WD vehicle using a wheel-lift towing device, use tow dollies under the opposite end of the vehicle. A vehicle with flatbed device can also be used to transport a disabled vehicle (Fig. 11).

TOWING (Continued)

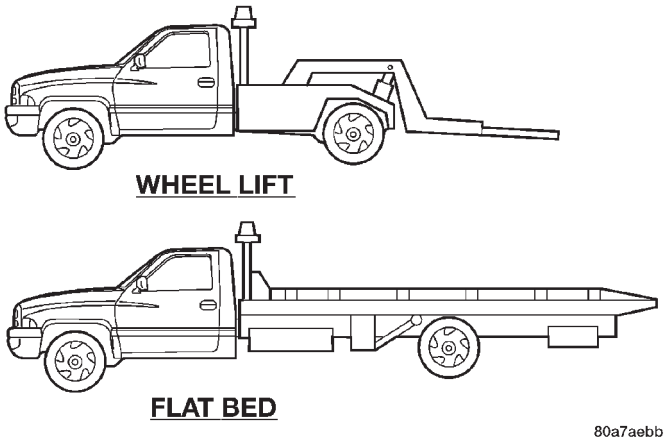

Fig. 11 Tow Vehicles With Approved Equipment

SAFETY PRECAUTIONS

CAUTION: The following safety precautions must be observed when towing a vehicle:

- Secure loose and protruding parts.
- Always use a safety chain system that is independent of the lifting and towing equipment.
- Do not allow towing equipment to contact the disabled vehicle's fuel tank.
- Do not allow anyone under the disabled vehicle while it is lifted by the towing device.
- Do not allow passengers to ride in a vehicle being towed.
- Always observe state and local laws regarding towing regulations.
- Do not tow a vehicle in a manner that could jeopardize the safety of the operator, pedestrians or other motorists.
- Do not attach tow chains, T-hooks, or J-hooks to a bumper, steering linkage, drive shafts or a non-reinforced frame hole.
- Do not tow a heavily loaded vehicle. Use a flat-bed device to transport a loaded vehicle.

TWO-WHEEL-DRIVE VEHICLE TOWING

DaimlerChrysler Corporation recommends that a vehicle be towed with the rear end lifted, whenever possible.

WARNING: WHEN TOWING A DISABLED VEHICLE AND THE DRIVE WHEELS ARE SECURED IN A WHEEL LIFT OR TOW DOLLIES, ENSURE THE TRANSMISSION IS IN THE PARK POSITION (AUTOMATIC TRANSMISSION) OR A FORWARD DRIVE GEAR (MANUAL TRANSMISSION).

WARNING: ENSURE VEHICLE IS ON A LEVEL SURFACE OR THE WHEELS ARE BLOCKED TO PREVENT VEHICLE FROM ROLLING.

TWO WHEEL DRIVE TOWING-REAR END LIFTED

CAUTION: Do not use steering column lock to secure steering wheel during towing operation.

2WD vehicles can be towed with the front wheels on the surface for extended distances at speeds not exceeding 48 km/h (30 mph).

(1) Attach wheel lift device to rear wheels.
(2) Place the transmission in neutral.
(3) Raise vehicle to towing position.
(4) Attach safety chains. Route chains so not to interfere with tail pipe when vehicle is lifted.
(5) Turn the ignition switch to the OFF position to unlock the steering wheel.

CAUTION: Do not use steering column lock to secure steering wheel during towing operation.

(6) Secure steering wheel in straight ahead position with a clamp device designed for towing.
(7) Place transmission in park.

TWO WHEEL DRIVE TOWING-FRONT END LIFTED

CAUTION: Many vehicles are equipped with air dams, spoilers, and/or ground effect panels. To avoid component damage, a wheel-lift towing vehicle or a flat-bed hauling vehicle is recommended.

(1) Attach wheel lift device to rear wheels.
(2) Place the transmission in neutral.
(3) Raise the rear of the vehicle off the ground and install tow dollies under rear wheels.
(4) Attach wheel lift device to front wheels and raise vehicle to towing position.
(5) Attach the safety chains.

CAUTION: Do not use steering column lock to secure steering wheel during towing operation.

(6) Turn the ignition switch to the OFF position to unlock the steering wheel.
(7) Secure steering wheel in straight ahead position with a clamp device designed for towing.
(8) Place transmission in park.

FOUR-WHEEL-DRIVE VEHICLE TOWING

DaimlerChrysler Corporation recommends that a 4WD vehicle be transported on a flat-bed device. A Wheel-lift device can be used provided **the trailing wheels are off the ground and positioned in tow dollies.**

TOWING (Continued)

WARNING: WHEN TOWING A DISABLED VEHICLE AND THE DRIVE WHEELS ARE SECURED IN A WHEEL LIFT OR TOW DOLLIES, ENSURE THE TRANSMISSION IS IN THE PARK POSITION.

CAUTION: Many vehicles are equipped with air dams, spoilers, and/or ground effect panels. To avoid component damage, a wheel-lift towing vehicle or a flat-bed hauling vehicle is recommended.

FOUR WHEEL DRIVE TOWING—REAR END LIFTED

WARNING: ENSURE VEHICLE IS ON A LEVEL SURFACE OR THE WHEELS ARE BLOCKED TO PREVENT VEHICLE FROM ROLLING.

(1) Attach wheel lift device to front wheels.
(2) Place the transmission in neutral.
(3) Raise the front of the vehicle off the ground and install tow dollies under front wheels.
(4) Attach wheel lift device to rear wheels and raise vehicle to towing position.
(5) Attach safety chains. Route chains so not to interfere with tail pipe when vehicle is lifted.
(6) Turn the ignition switch to the OFF position to unlock the steering wheel.

CAUTION: Do not use steering column lock to secure steering wheel during towing operation.

(7) Secure steering wheel in straight ahead position with a clamp device designed for towing.
(8) Place transmission in park.

FOUR WHEEL DRIVE TOWING—FRONT END LIFTED

WARNING: ENSURE VEHICLE IS ON A LEVEL SURFACE OR THE WHEELS ARE BLOCKED TO PREVENT VEHICLE FROM ROLLING.

(1) Attach wheel lift device to rear wheels.
(2) Place the transmission in neutral.
(3) Raise the rear of the vehicle off the ground and install tow dollies under rear wheels.
(4) Attach wheel lift device to front wheels and raise vehicle to towing position.
(5) Attach the safety chains.

CAUTION: Do not use steering column lock to secure steering wheel during towing operation.

(6) Turn the ignition switch to the OFF position to unlock the steering wheel.
(7) Secure steering wheel in straight ahead position with a clamp device designed for towing.
(8) Place transmission in park.

SUSPENSION

TABLE OF CONTENTS

page

SUSPENSION
DIAGNOSIS AND TESTING 2
SUSPENSION AND STEERING SYSTEM 2
WHEEL ALIGNMENT
DESCRIPTION 3
OPERATION 3
STANDARD PROCEDURE 4
CAMBER 4
CASTER. 4
TOE POSITION 4
SPECIFICATIONS 5
FRONT SUSPENSION
DESCRIPTION 5
STANDARD PROCEDURE 6
SERVICE WARNINGS AND PRECAUTIONS 6
SPECIFICATIONS 6
SPECIAL TOOLS 7
BUSHINGS
REMOVAL 8
INSTALLATION. 8
HUB / BEARING
DESCRIPTION 8
OPERATION 8
REMOVAL 8
INSTALLATION. 9
JOUNCE BUMPER
DESCRIPTION 9
OPERATION 9
KNUCKLE
DESCRIPTION 9
OPERATION 9
REMOVAL 9
INSTALLATION. 10
LOWER BALL JOINT
REMOVAL 10
LOWER CONTROL ARM
DESCRIPTION 10
OPERATION. 10
REMOVAL 10
INSTALLATION 11
SHOCK
DESCRIPTION 11
OPERATION. 11
REMOVAL 11
INSTALLATION 11
SPRING
DESCRIPTION 12
OPERATION. 12
REMOVAL 12
INSTALLATION. 12
STABILIZER BAR
DESCRIPTION 13
OPERATION. 13
REMOVAL 13
INSTALLATION. 13
TRACK BAR
DESCRIPTION 13
OPERATION. 13
REMOVAL 13
INSTALLATION. 13
UPPER BALL JOINT
REMOVAL 14
UPPER CONTROL ARM
DESCRIPTION 15
OPERATION. 15
REMOVAL 15
INSTALLATION. 15
REAR SUSPENSION
DESCRIPTION 16
WARNING 16
DIAGNOSIS AND TESTING 16
REAR SUSPENSION 16
SPECIFICATIONS 17
SPECIAL TOOLS 17
JOUNCE BUMPER
DESCRIPTION 17
OPERATION. 17
LOWER CONTROL ARM
DESCRIPTION 17
OPERATION. 18
REMOVAL 18
INSTALLATION. 18
SHOCK
DESCRIPTION 18
OPERATION. 18
REMOVAL 18
INSTALLATION. 18
SPRING
DESCRIPTION 19
OPERATION. 19
REMOVAL 19
INSTALLATION. 19
STABILIZER BAR
DESCRIPTION 20
OPERATION. 20
REMOVAL 20
INSTALLATION. 20

UPPER BALL JOINT
DESCRIPTION 20
OPERATION. 20
REMOVAL 20
INSTALLATION. 21

UPPER CONTROL ARM
DESCRIPTION 21
OPERATION. 21
REMOVAL 21
INSTALLATION. 22

SUSPENSION

DIAGNOSIS AND TESTING - SUSPENSION AND STEERING SYSTEM

CONDITION	POSSIBLE CAUSES	CORRECTION
FRONT END NOISE	1. Loose or worn wheel bearings.	1. Adjust or replace wheel bearings.
	2. Loose or worn steering or suspension components.	2. Tighten or replace components as necessary.
EXCESSIVE PLAY IN STEERING	1. Loose or worn wheel bearings.	1. Adjust or replace wheel bearings.
	2. Loose or worn steering or suspension components.	2. Tighten or replace components as necessary.
	3. Loose or worn steering gear.	3. Adjust or replace steering gear.
FRONT WHEELS SHIMMY	1. Loose or worn wheel bearings.	1. Adjust or replace wheel bearings.
	2. Loose or worn steering or suspension components.	2. Tighten or replace components as necessary.
	3. Tires worn or out of balance.	3. Replace or balance tires.
	4. Alignment.	4. Align vehicle to specifications.
	5. Leaking steering dampener.	5. Replace steering dampener.
VEHICLE INSTABILITY	1. Loose or worn wheel bearings.	1. Adjust or replace wheel bearings.
	2. Loose or worn steering or suspension components.	2. Tighten or replace components as necessary.
	3. Tire pressure.	3. Adjust tire pressure.
	4. Alignment.	4. Align vehicle to specifications.
EXCESSIVE STEERING EFFORT	1. Loose or worn steering gear.	1. Adjust or replace steering gear.
	2. Power steering fluid low.	2. Add fluid and repair leak.
	3. Column coupler binding.	3. Replace coupler.
	4. Tire pressure.	4. Adjust tire pressure.
	5. Alignment.	5. Align vehicle to specifications.
VEHICLE PULLS TO ONE SIDE DURING BRAKING	1. Uneven tire pressure.	1. Adjust tire pressure.
	2. Worn brake components.	2. Repair brakes as necessary.
	3. Air in brake line.	3. Repair as necessary.

SUSPENSION (Continued)

CONDITION	POSSIBLE CAUSES	CORRECTION
VEHICLE LEADS OR DRIFTS FROM STRAIGHT AHEAD DIRECTION ON UNCROWNED ROAD	1. Radial tire lead.	1. Cross front tires.
	2. Brakes dragging.	2. Repair brake as necessary.
	3. Weak or broken spring.	3. Replace spring.
	4. Uneven tire pressure.	4. Adjust tire pressure.
	5. Wheel Alignment.	5. Align vehicle.
	6. Loose or worn steering or suspension components.	6. Repair as necessary.
	7. Cross caster out of spec.	7. Align vehicle.
KNOCKING, RATTLING OR SQUEAKING	1. Worn shock bushings.	1. Replace shock.
	2. Loose, worn or bent steering/ suspension components.	2. Inspect, tighten or replace components as necessary.
	3. Shock valve.	3. Replace shock.
IMPROPER TRACKING	1. Loose, worn or bent track bar.	1. Inspect, tighten or replace component as necessary.
	2. Loose, worn or bent steering/ suspension components.	2. Inspect, tighten or replace components as necessary.

WHEEL ALIGNMENT

DESCRIPTION

Wheel alignment involves the correct positioning of the wheels in relation to the vehicle. The positioning is accomplished through suspension and steering linkage adjustments. An alignment is considered essential for efficient steering, good directional stability and to minimize tire wear. The most important measurements of an alignment are caster, camber and toe position (Fig. 1).

CAUTION: Never attempt to modify suspension or steering components by heating or bending.

CAUTION: Components attached with a nut and cotter pin must be torqued to specification. Then if the slot in the nut does not line up with the cotter pin hole, tighten nut until it is aligned. Never loosen the nut to align the cotter pin hole.

NOTE: Periodic lubrication of the front suspension/ steering system components may be required. Rubber bushings must never be lubricated. Refer to Lubrication And Maintenance for the recommended maintenance schedule.

OPERATION

- **CASTER** is the forward or rearward tilt of the steering knuckle from vertical. Tilting the top of the knuckle rearward provides positive caster. Tilting the top of the knuckle forward provides negative caster. Caster is a directional stability angle. This angle enables the front wheels to return to a straight ahead position after turns.
- **CAMBER** is the inward or outward tilt of the wheel relative to the center of the vehicle. Tilting the top of the wheel inward provides negative camber. Tilting the top of the wheel outward provides positive camber. Incorrect camber will cause wear on the inside or outside edge of the tire. The angle is not adjustable, damaged component(s) must be replaced to correct the camber angle.
- **WHEEL TOE POSITION** is the difference between the leading inside edges and trailing inside edges of the front tires. Incorrect wheel toe position is the most common cause of unstable steering and uneven tire wear. The wheel toe position is the **final** front wheel alignment adjustment.
- **STEERING AXIS INCLINATION ANGLE** is measured in degrees and is the angle that the steering knuckles are tilted. The inclination angle has a fixed relationship with the camber angle. It will not change except when a spindle or ball stud is damaged or bent. The angle is not adjustable, damaged component(s) must be replaced to correct the steering axis inclination angle.

WHEEL ALIGNMENT (Continued)

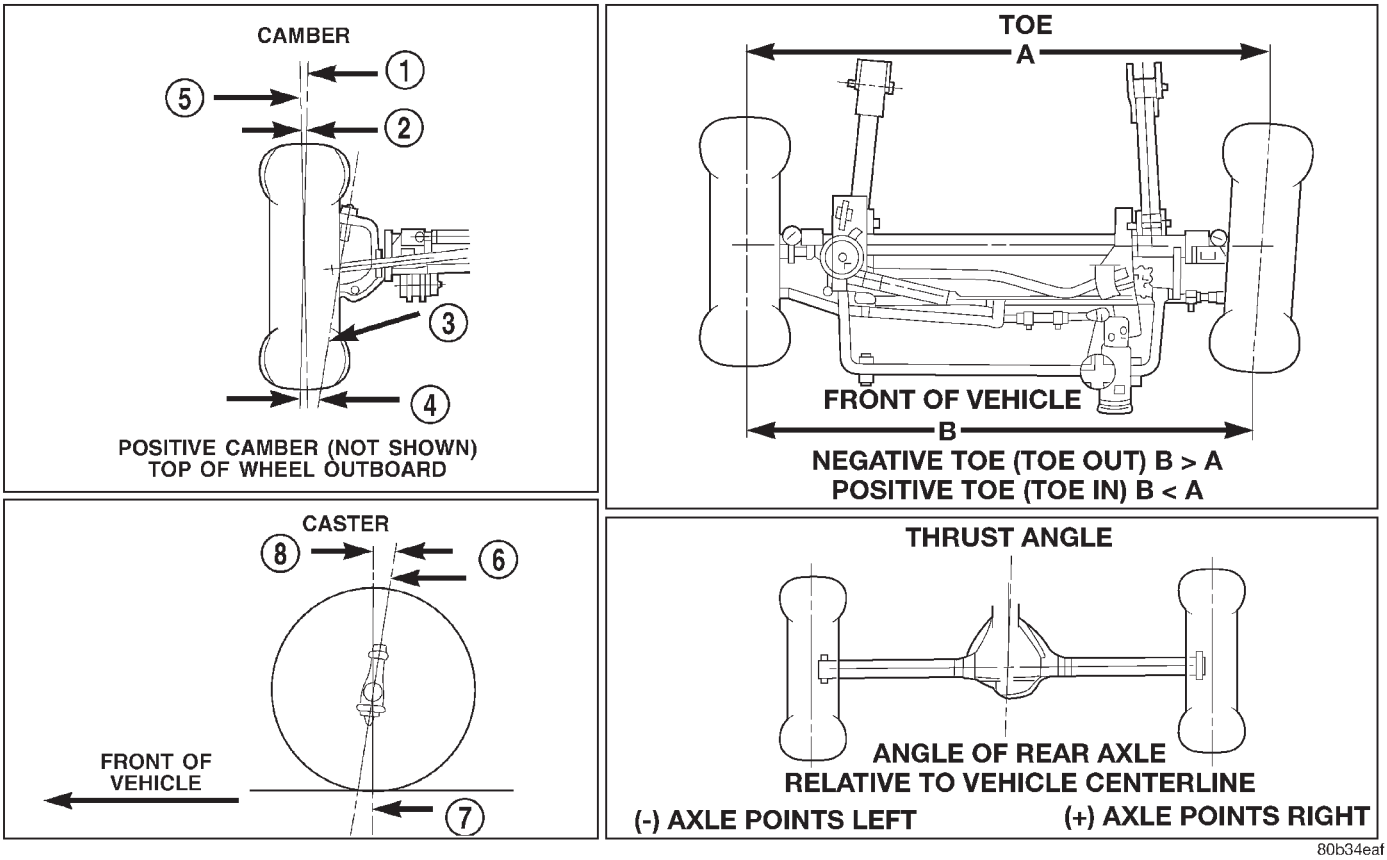

Fig. 1 Wheel Alignment Measurements

1 - WHEEL CENTERLINE
2 - NEGATIVE CAMBER ANGLE
3 - PIVOT CENTERLINE
4 - SCRUB RADIUS
5 - TRUE VERTICAL
6 - KING PIN
7 - VERTICAL
8 - POSITIVE CASTER

• **THRUST ANGLE** is the angle of the rear axle relative to the centerline of the vehicle. Incorrect thrust angle can cause off-center steering and excessive tire wear. This angle is not adjustable, damaged component(s) must be replaced to correct the thrust angle.

STANDARD PROCEDURE - CAMBER

Before each alignment reading the vehicle should be jounced (rear first, then front). Grasp each bumper at the center and jounce the vehicle up and down three times. Always release the bumper in the down position.

To obtain an accurate alignment, a 4 wheel alignment machine must be used and the equipment calibration verified.

The wheel camber angle is preset. This angle is not adjustable and cannot be altered.

STANDARD PROCEDURE - CASTER

Before each alignment reading the vehicle should be jounced (rear first, then front). Grasp each bumper at the center and jounce the vehicle up and down three times. Always release the bumper in the down position.

To obtain an accurate alignment, a 4 wheel alignment machine must be used and the equipment calibration verified.

The wheel caster angle is preset. This angle is not adjustable and cannot be altered.

STANDARD PROCEDURE - TOE POSITION

Before each alignment reading the vehicle should be jounced (rear first, then front). Grasp each bumper at the center and jounce the vehicle up and down three times. Always release the bumper in the down position.

WHEEL ALIGNMENT (Continued)

To obtain an accurate alignment, a 4 wheel alignment machine must be used and the equipment calibration verified.

NOTE: For an accurate wheel toe position adjustment the engine must be engine running.

(1) Apply parking brakes.
(2) Start the engine and turn wheels both ways before straightening the steering wheel. Center and secure the steering wheel.
(3) Loosen the tie rod adjustment sleeve clamp bolts (Fig. 2) .
(4) Turn the sleeve to obtain the preferred positive TOE-IN specification. Position the clamp bolts as shown (Fig. 2) for proper clearance.
(5) Tighten the clamp bolts to 68 N·m (50 ft. lbs.).

NOTE: Make sure the toe setting does not change during clamp tightening.

(6) Verify alignment specifications, then turn the engine off.

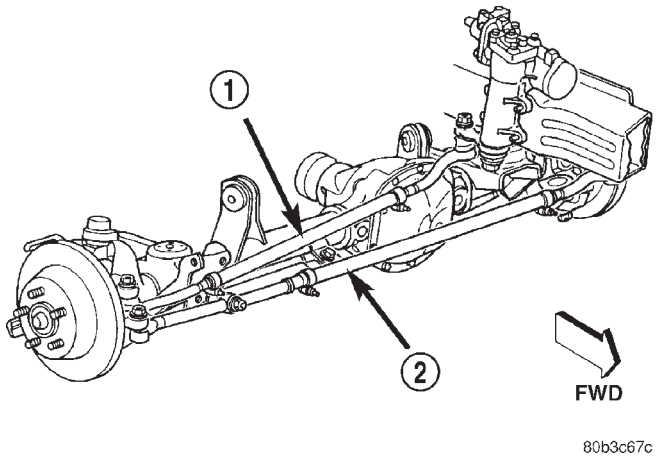

Fig. 2 Steering Linkage

1 - DRAG LINK ADJUSTMENT SLEEVE
2 - TIE ROD ADJUSTMENT SLEEVE

STEERING WHEEL CENTERING

NOTE: The steering wheel can be centered without affecting the toe position.

(1) Loosen the drag link adjustment sleeve clamp bolts.
(2) Turn the adjustment sleeve to center the wheel.
(3) Position the clamp bolts as shown (Fig. 2)for proper clearance.
(4) Tighten the clamp bolts to 68 N·m (50 ft. lbs.).
(5) Road test the vehicle to verify the wheel is centered.

SPECIFICATIONS

ALIGNMENT

NOTE: Specifications are in degrees.

FRONT WHEELS - STANDARD SUSPENSION

SPECIFICATIONS

DESCRIPTION	SPECIFICATION		
PREFERRED	CASTER + 6.75°	CAMBER − 0.37°	TOTAL TOE-IN + 0.20°
RANGE	+ 6.0° to + 7.5°	− 0.75° to + 0.5°	N/A
MAX RT/LT DIFFERENCE	0.5°	0.5°	0.5°

FRONT WHEELS - UP-COUNTRY SUSPENSION

SPECIFICATIONS

DESCRIPTION	SPECIFICATION		
PREFERRED	CASTER + 6.5°	CAMBER − 0.37°	TOTAL TOE-IN + 0.20°
RANGE	+ 5.7° to + 7.2°	− 0.75° to + 0°	N/A
MAX RT/LT DIFFERENCE	0.5°	0.5°	0.05°

REAR AXLE

SPECIFICATIONS

DESCRIPTION	SPECIFICATION		
PREFERRED	CASTER	THRUST ANGLE	TOTAL TOE-IN
RANGE	0° to –0.5°	± 0.25°	0° to +0.5°

FRONT SUSPENSION

DESCRIPTION

The front suspension (Fig. 3) is a link/coil design comprised of :

- Drive axle
- Shock absorbers
- Coil springs
- Upper and lower suspension arms
- Stabilizer bar
- Track bar
- Jounce bumpers

FRONT SUSPENSION (Continued)

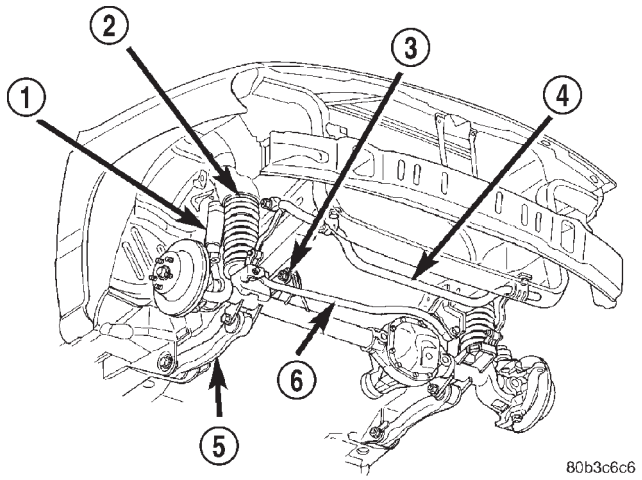

Fig. 3 Front

1 - SHOCK
2 - COIL SPRING
3 - UPPER SUSPENSION ARM
4 - STABILIZER BAR
5 - LOWER SUSPENSION ARM
6 - TRACK BAR

CAUTION: Components attached with a nut and cotter pin must be torqued to specification. Then if the slot in the nut does not line up with the cotter pin hole, tighten nut until it is aligned. Never loosen the nut to align the cotter pin hole.

CAUTION: Suspension components with rubber bushings must be tightened with the vehicle at normal ride height. It is important to have the springs supporting the weight of the vehicle when the fasteners are torqued. If springs are not at their normal ride position, vehicle ride comfort will be affected and cause premature bushing wear.

STANDARD PROCEDURES - SERVICE WARNINGS AND CAUTIONS

CAUTION: Suspension components with rubber bushings must be tightened with the vehicle at normal ride height. It is important to have the springs supporting the weight of the vehicle when the fasteners are torqued. If springs are not at their normal ride position, vehicle ride comfort will be affected and cause premature bushing wear.

SPECIFICATIONS

TORQUE CHART

TORQUE SPECIFICATIONS

DESCRIPTION	N·m	Ft. Lbs.	In. Lbs.
Shock Absorber Upper Nut	35	26	
Shock Absorber Lower Nut	28		250
Suspension Arm Upper Axle Bracket Nut	61	45	
Suspension Arm Upper Frame Bracket Bolt	61	45	
Suspension Arm Lower Axle Bracket Nut	163	120	
Suspension Arm Lower Frame Bracket Bolt	156	115	
Stabilizer Bar Retainer Bolts	92	68	
Stabilizer Bar Link Upper Nut	106	78	
Stabilizer Bar Link Lower Nut	106	78	
Track Bar Frame Bracket Nut	108	80	
Track Bar Axle Bracket Bolt	100	74	
Hub Bearing Knuckle Bolts	102	75	

SPECIAL TOOLS

FRONT SUSPENSION

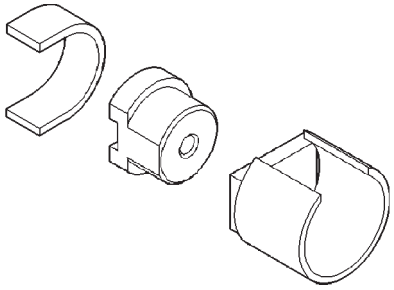

Remover/Installer Suspension Bushing 7932

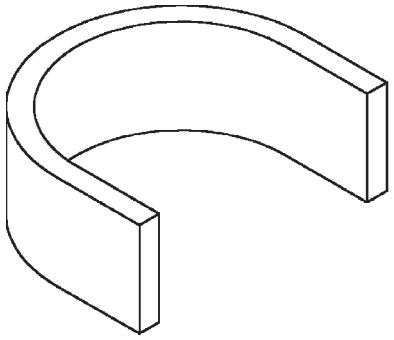

Spacer 8279

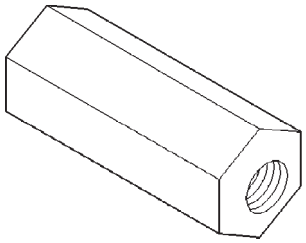

Nut, Long 7603

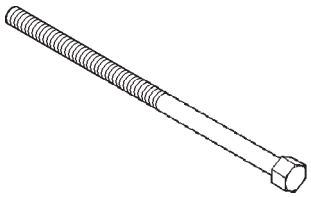

Bolt, Special 7604

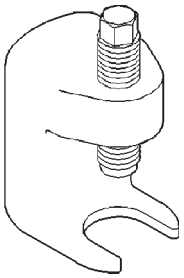

Remover C-4150A

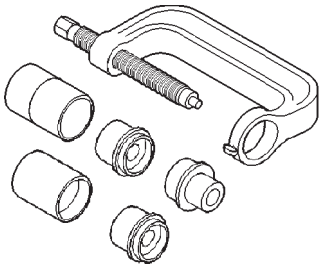

Remover/Installer 6289

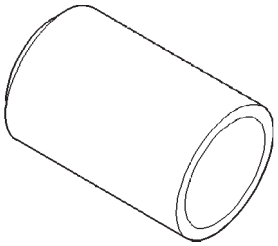

Reciever 6761

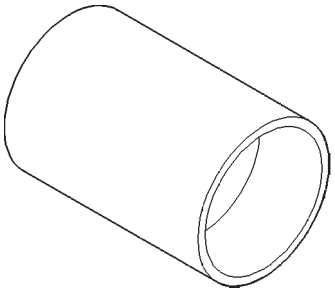

Installer 6752

BUSHINGS

REMOVAL

(1) Remove the upper suspension arm from axle.

(2) Position Spacer 8279 over the axle bushing on a 4x2 vehicle and right side on a 4x4 vehicle.

(3) Place Receiver 7932-1 over flanged end of the bushing. (Fig. 4).

(4) Place small end of Remover/Install 7932-2 against other side of the bushing.

(5) Install bolt 7604 through remover, bushing and receiver.

(6) Install Long Nut 7603 and tighten nut too pull bushing out of the axle bracket.

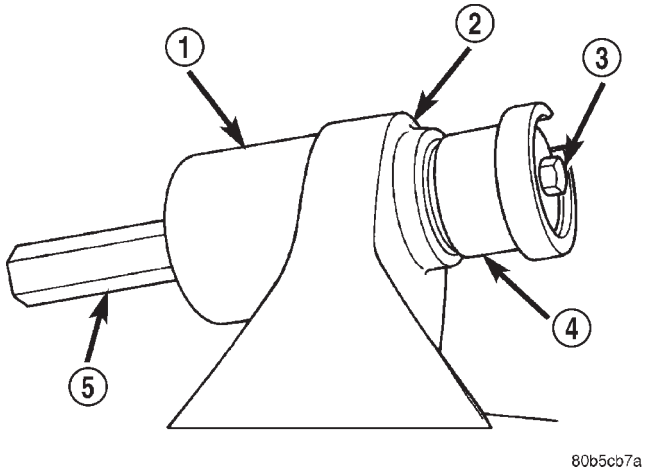

Fig. 4 Bushing Removal

1 - RECEIVER
2 - AXLE BRACKET
3 - BOLT
4 - REMOVER/INSTALLER
5 - LONG NUT

(7) Remove nut, bolt, receiver, remover and bushing.

NOTE: On 4x2 vehicle and right side of 4x4 vehicle, leave Spacer 8279 in position for bushing installation.

INSTALLATION

(1) Place Receiver 7932-1on the other side of the axle bracket.

(2) Position new bushing up to the axle bracket., and large end of Remover/Install 7932-2 against the bushing (Fig. 5).

(3) Install bolt 7604 through receiver, bushing and installer.

(4) Install Long Nut 7603 and tighten nut to draw the bushing into the axle bracket.

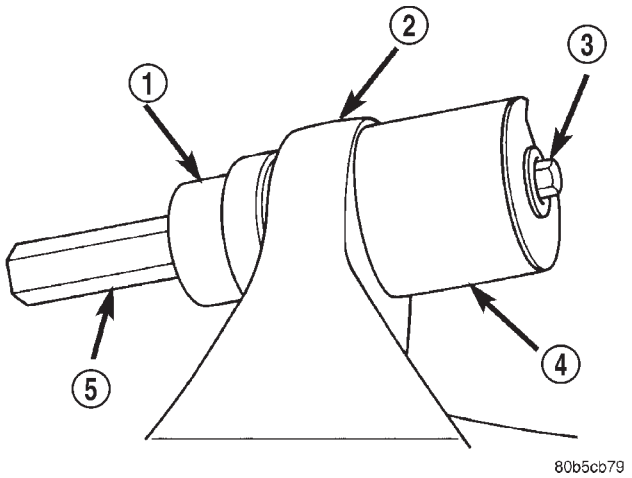

Fig. 5 Bushing Installation

1 - REMOVER/INSTALLER
2 - AXLE BRACKET
3 - BOLT
4 - RECEIVER
5 - LONG NUT

(5) Remove tools and install the upper suspension arm.

HUB / BEARING

DESCRIPTION

The bearing used on the front hub of this vehicle is the combined hub and bearing unit type assembly. This unit assembly combines the front wheel mounting hub (flange) and the front wheel bearing into a one piece unit. The wheel mounting studs are the only replaceable component of the hub/bearing assembly.

OPERATION

The hub/bearing assembly is mounted to the steering knuckle and is retained by three mounting bolts accessible from the back of the steering knuckle. The hub/bearing unit is not serviceable and must be replaced as an assembly if the bearing or the hub is determined to be defective.

REMOVAL

(1) Raise and support the vehicle.

(2) Remove the wheel and tire assembly.

(3) Remove the brake caliper, caliper anchor, rotor and ABS wheel speed sensor,(Refer to 5 - BRAKES/ELECTRICAL/FRONT WHEEL SPEED SENSOR - REMOVAL).

(4) Remove the cotter pin, nut retainer and axle hub nut.

HUB / BEARING (Continued)

(5) Remove the hub bearing mounting bolts from the back of the steering knuckle. Remove hub bearing (Fig. 6) from the steering knuckle and off the axle shaft.

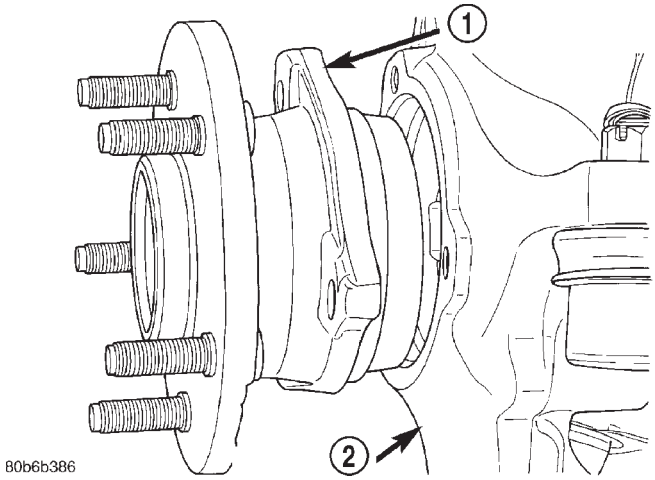

Fig. 6 Hub Bearing & Knuckle

1 - HUB BEARING
2 - KNUCKLE

INSTALLATION

(1) Install the hub bearing to the knuckle.

(2) Install the hub bearing to knuckle bolts and tighten to 102 N·m (75 ft. lbs.).

(3) Install the hub washer and nut. Tighten the hub nut to 237 N·m (175 ft. lbs.). Install the nut retainer and a new cotter pin.

(4) Install the brake rotor, caliper anchor, caliper and ABS wheel speed sensor,(Refer to 5 - BRAKES/ ELECTRICAL/FRONT WHEEL SPEED SENSOR - INSTALLATION).

(5) Install the wheel and tire assembly.

(6) Remove the support and lower the vehicle.

JOUNCE BUMPER

DESCRIPTION

They are mounted under the unibody rails to minimize transmission of noise to the passenger compartment.

OPERATION

The jounce bumpers are used to limit suspension travel in compression.

KNUCKLE

DESCRIPTION

The knuckle is a single casting with legs machined for the upper and lower ball joints. The knuckle also has machined mounting locations for the front brake calipers and hub bearing.

OPERATION

The steering knuckle pivot between the upper and lower ball joint. Steering linkage attached to the knuckle allows the vehicle to be steered.

REMOVAL - STEERING KNUCKLE

Ball stud service procedures below require removal of the hub bearing and axle shaft. Removal and installation of upper and lower ball studs require the use of Tool Kit 6289.

(1) Remove hub bearing and axle shaft.

(2) Disconnect the tie-rod or drag link from the steering knuckle arm. Refer to Group 2, Suspension, for proper procedures.

(3) Remove the cotter pins from the upper and lower ball studs.

(4) Remove the upper and lower ball stud nuts.

(5) Strike the steering knuckle with a brass hammer to loosen knuckle from the ball studs. Remove knuckle from ball studs (Fig. 7).

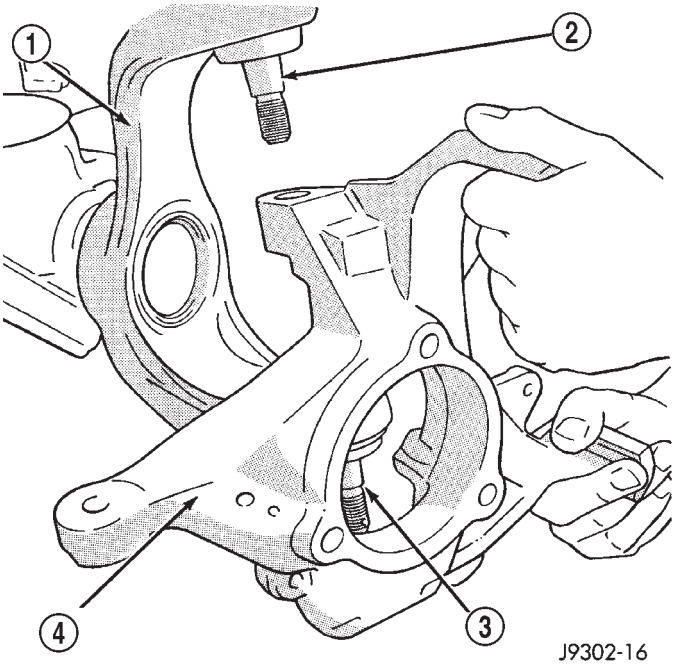

Fig. 7 Steering Knuckle Removal/Installation

1 - AXLE YOKE
2 - UPPER BALL STUD
3 - LOWER BALL STUD
4 - STEERING KNUCKLE

KNUCKLE (Continued)

INSTALLATION

(1) Position the steering knuckle on the ball studs.

(2) Install and tighten the bottom retaining nut to 109 N·m (80 ft. lbs.) torque. Install new cotter pin.

(3) Install and tighten the top retaining nut to 101 N·m (75 ft. lbs.) torque. Install new cotter pin.

(4) Install the hub bearing and axle shaft.

(5) Connect the tie-rod or drag link end to the steering knuckle arm. Refer to Group 2, Suspension, for proper procedures.

LOWER BALL JOINT

REMOVAL

Ball stud service procedures below require removal of the hub bearing and axle shaft. Removal and installation of upper and lower ball studs require the use of Tool Kit 6289.

(1) Position tools as shown to remove and install ball stud (Fig. 8).

LOWER CONTROL ARM

DESCRIPTION

The lower suspension arms are hydroformed steel and use voided oval bushings at one end of the arm.

OPERATION

The bushings provide isolation from the axle. The arms mount to the unibody frame rail bracket and the axle brackets. The arm and bushings provide location and react to loads from the axle.

REMOVAL

(1) Raise the vehicle and support the front axle.

(2) Remove the lower suspension arm nut and bolt from the axle bracket (Fig. 9).

(3) Remove the nut and bolt from the frame rail bracket and remove the lower suspension arm (Fig. 9).

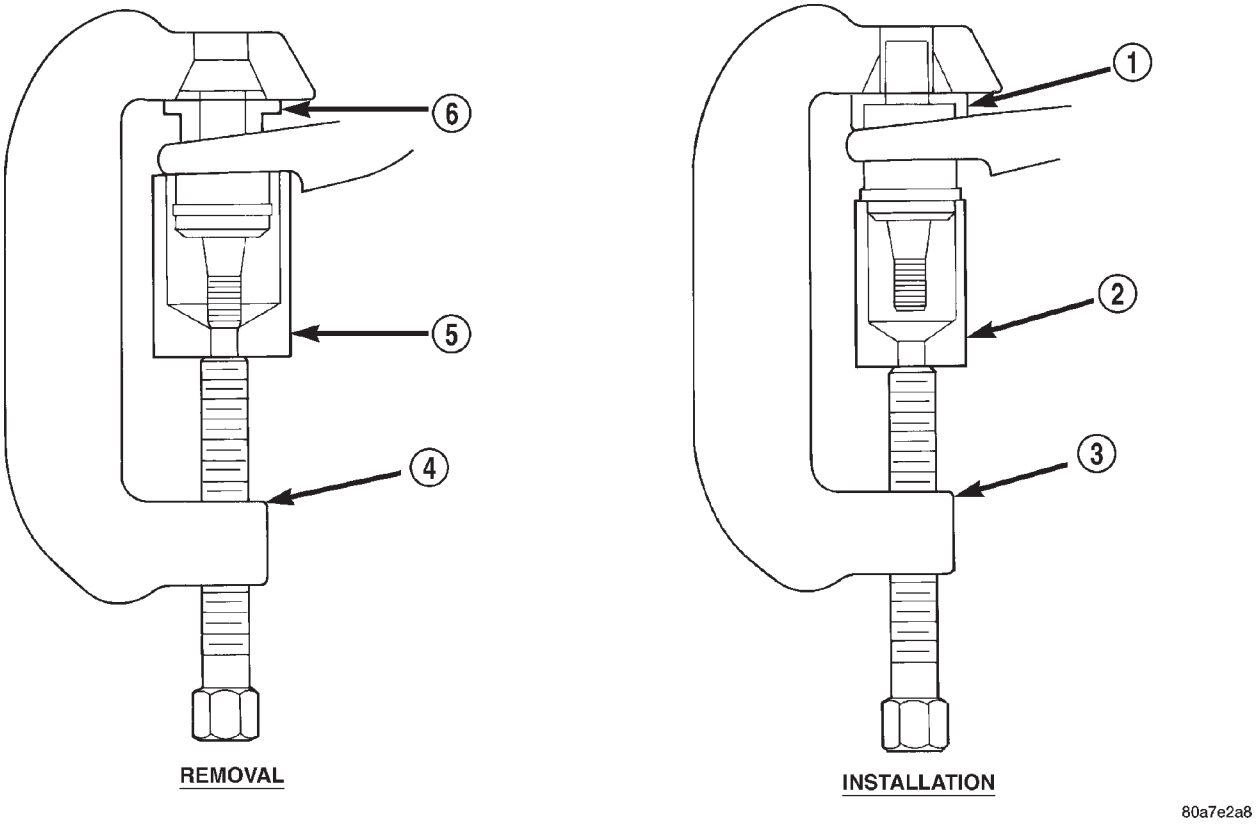

Fig. 8 Lower

1 - SPECIAL TOOL 6289–12
2 - SPECIAL TOOL 6289–4
3 - SPECIAL TOOL 4212F
4 - SPECIAL TOOL 4212F
5 - SPECIAL TOOL 6289–1
6 - SPECIAL TOOL 6289–3

LOWER CONTROL ARM (Continued)

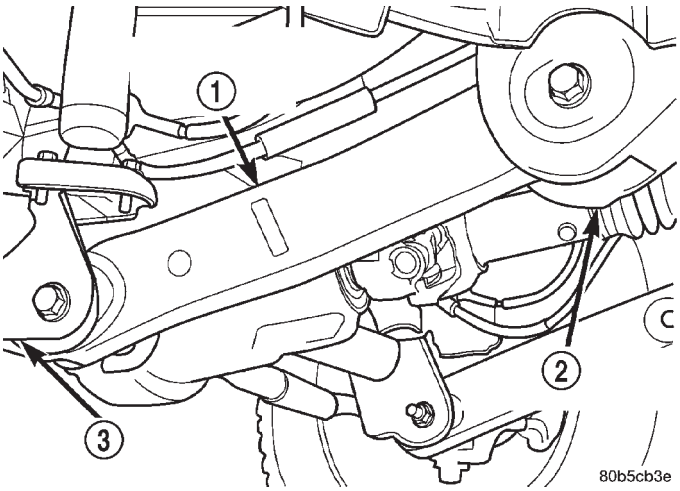

Fig. 9 Lower Suspension Arm

1 - LOWER SUSPENSION ARM
2 - FRAME RAIL BRACKET
3 - AXLE BRACKET

INSTALLATION

(1) Position the lower suspension arm in the axle bracket and frame rail bracket.

NOTE: The end of the arm with the oval bushing attaches to the axle bracket.

(2) Install the axle bracket bolt and nut finger tight.
(3) Install the frame rail bracket bolt and nut finger tight.
(4) Remove support and lower the vehicle.
(5) With the vehicle on the ground tighten the frame bracket bolt to 156 N·m (115 ft. lbs.). Tighten the axle bracket nut to 163 N·m (120 ft. lbs.).
(6) Check the alignment if new parts were installed.

SHOCK

DESCRIPTION

The top of the shock absorbers are bolted to the body. The bottom of the shocks are bolted to the axle brackets. The standard shocks have conventional twin tube construction and are low pressure gas charged. Gas charging prevents cavitation during rough road operation. Up-Country shocks are mono tube design and are high pressure gas charged.

OPERATION

The shock absorbers dampen jounce and rebound motion of the vehicle over various road conditions and limit suspension rebound travel.

REMOVAL

(1) Remove the nut, retainer and grommet from the shock stud in the engine compartment (Fig. 10).

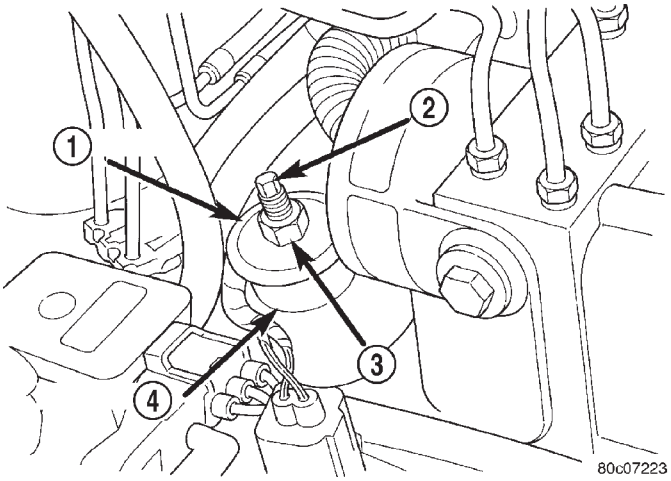

Fig. 10 Upper Shock Mounting

1 - RETAINER
2 - STUD
3 - NUT
4 - GROMMET

(2) Raise and support the front axle.
(3) Remove the lower mounting nuts from the axle bracket (Fig. 11). Remove the shock absorber.

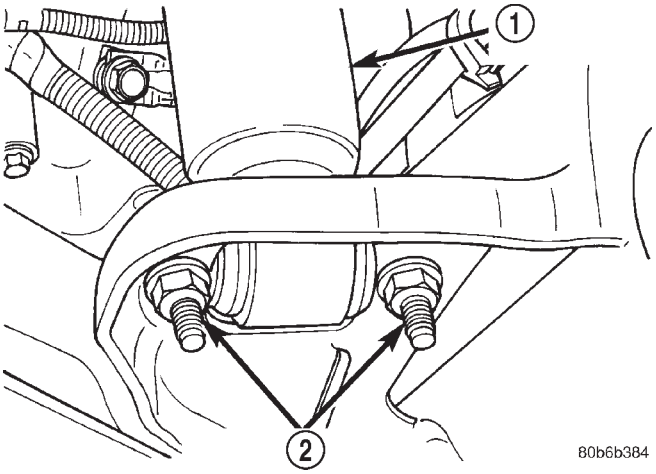

Fig. 11 Lower Shock Mounting

1 - SHOCK ABSORBER
2 - MOUNTING NUTS

INSTALLATION

(1) Position the lower retainer and grommet on the shock stud. Insert the shock absorber through the shock tower hole.
(2) Install the lower shock studs into the axle bracket.

SHOCK (Continued)

(3) Install the mounting nuts and tighten to 28 N·m (250 in. lbs.).

(4) Remove support and lower the vehicle.

(5) Install the upper grommet, retainer and nut on the stud in the engine compartment. Hold the shock stud with a 8 mm wrench and tighten the nut to 35 N·m (26 ft. lbs.).

SPRING

DESCRIPTION

The coil springs mount up in the wheelhouse which is part of the unitized body bracket. A rubber doughnut isolator is located between the top of the spring and the body. The bottom of the spring seats on a axle isolator made of rubber with a steel insert.

OPERATION

The coil springs control ride quality and maintain proper ride height. The isolators provide road noise isolation.

REMOVAL

(1) Raise and support the vehicle. Position a hydraulic jack under the axle to support it.

(2) Remove the wheel and tire assemblies.

(3) Remove stabilizer bar links mounting nuts and bolts from the axle brackets.

(4) Remove shock absorbers lower mounting nuts from the axle brackets.

(5) Remove the track bar mounting bolt from the axle bracket.

(6) Lower the axle until the spring is free from the upper mount and isolator (Fig. 12).

(7) Remove the spring from the vehicle.

(8) Remove and inspect the upper and lower spring isolators.

INSTALLATION

(1) Install the upper isolator.

(2) Install the lower isolator with the isolator locator nub in the axle pad hole (Fig. 13).

(3) Position the coil spring on the axle spring pad.

CAUTION: Ensure the spring is positioned on the lower isolator with the end of the spring coil against the isolator spring locator (Fig. 14).

(4) Raise the axle and guide the springs onto the spring upper mounts and lower shock studs into the axle brackets.

(5) Install the shock absorbers lower mounting nuts.

(6) Install the stabilizer bar link to the axle bracket and install the mounting bolts and nuts.

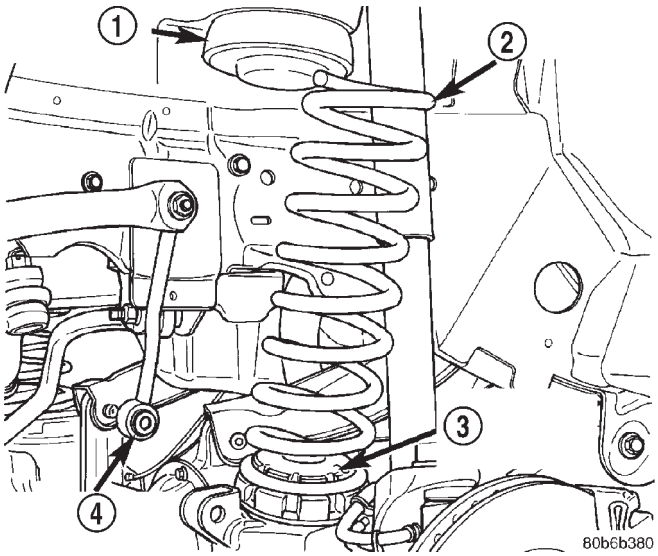

Fig. 12 Front Coil Spring

1 - UPPER ISOLATOR
2 - COIL SPRING
3 - LOWER ISOLATOR
4 - STABILIZER LINK

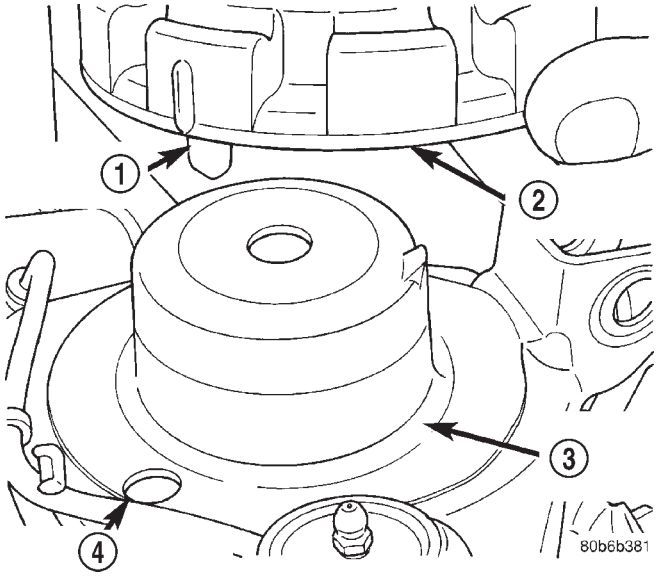

Fig. 13 Lower Isolator

1 - LOCATING NUB
2 - LOWER ISOLATOR
3 - AXLE SPRING PAD
4 - LOCATING HOLE

(7) Install the track bar to the axle bracket and install the mounting bolt.

NOTE: It may be necessary to pry the axle assembly over to install the track bar bolt.

SPRING (Continued)

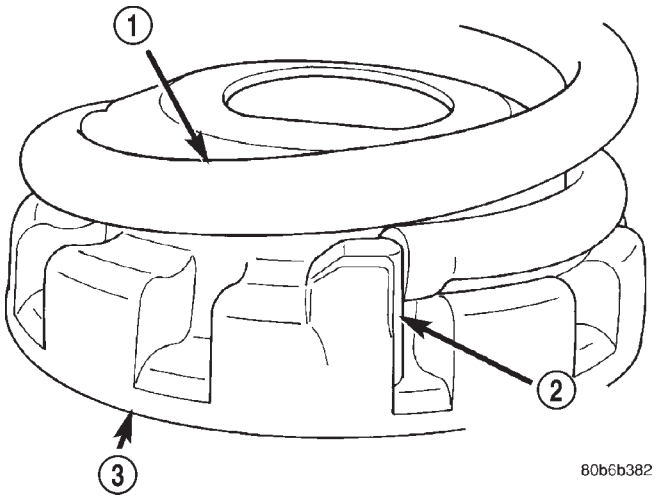

Fig. 14 Isolator Spring Locator

1 - COIL SPRING
2 - SPRING LOCATOR
3 - LOWER ISOLATOR

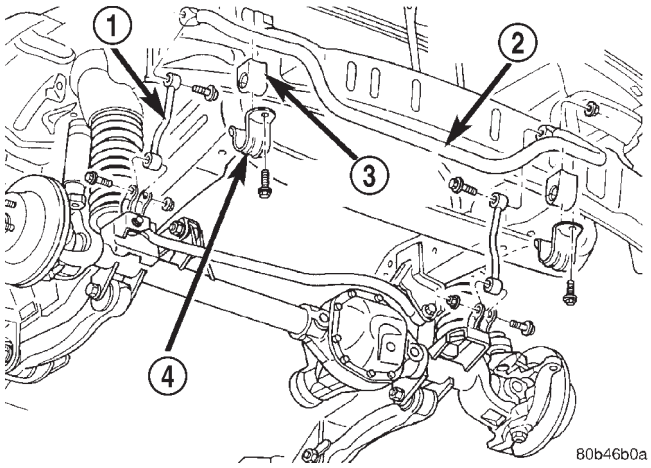

Fig. 15 Stabilizer Bar

1 - LINK
2 - STABILIZER BAR
3 - BUSHING
4 - RETAINER

(8) Tighten all suspension components to proper torque.

(9) Install the wheel and tire assemblies.

(10) Remove support and lower vehicle.

STABILIZER BAR

DESCRIPTION

The bar extends across the front underside of the chassis and is mounted to the frame rails. Links are connected from the bar to the axle brackets. The stabilizer bar and links are isolated by rubber bushings.

OPERATION

The stabilizer bar is used to control vehicle body roll during turns. The spring steel bar helps to control the vehicle body in relationship to the suspension.

REMOVAL

(1) Raise and support the vehicle.

(2) Remove link nuts and bolts (Fig. 15) and remove the links.

(3) Remove the stabilizer bar retainer bolts (Fig. 15)from the frame rails and remove the stabilizer bar.

INSTALLATION

(1) Position the stabilizer bar on the frame rail and install the retainers and bolts. Ensure the bar is centered with equal spacing on both sides. Tighten the bolts to 92 N·m (68 ft. lbs.).

(2) Install the links onto the stabilizer bar and axle brackets and install the bolts and nuts finger tight.

(3) Remove the supports and lower the vehicle.

(4) With the vehicle on the ground tighten the stabilizer bar link nuts to 106 N·m (78 ft. lbs.).

TRACK BAR

DESCRIPTION

The bar is attached to a frame rail bracket and axle bracket. The bar is forged and has non replaceable isolator bushings at both ends.

OPERATION

The track bar is used to control front axle lateral movement and provides cross car location of the axle assembly.

REMOVAL

(1) Raise and support the vehicle.

(2) Remove the nut and bolt from the frame rail bracket (Fig. 16).

(3) Remove the bolt from the axle shaft tube bracket (Fig. 17). Remove the track bar.

INSTALLATION

(1) Install the track bar to the axle tube bracket. Install the retaining bolt finger tight.

(2) Install track bar to the frame rail bracket. Install the bolt and nut finger tight.

TRACK BAR (Continued)

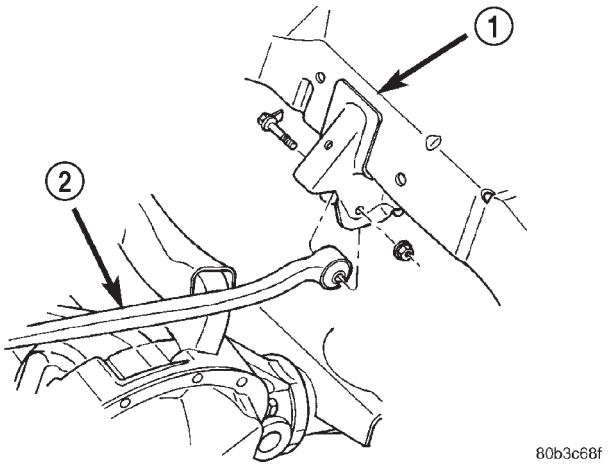

Fig. 16 Track Bar Frame Rail Bracket

1 - FRAME RAIL
2 - TRACK BAR

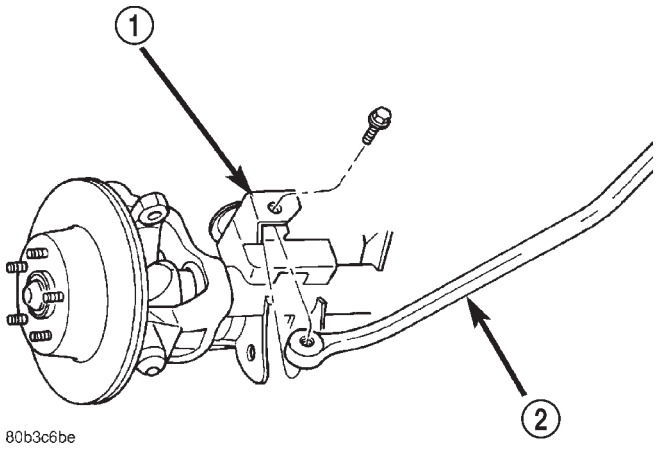

Fig. 17 Track Bar Axle Bracket

1 - AXLE BRACKET
2 - TRACK BAR

NOTE: It may be necessary to pry the axle assembly over to install the track bar to the frame rail bracket.

(3) Remove the supports and lower the vehicle.

(4) With the vehicle on the ground tighten the nut at the frame rail bracket and to the bolt at the axle bracket to 100 N·m (74 ft. lbs.).

(5) Check alignment specifications if a new track bar was installed.

UPPER BALL JOINT

REMOVAL

Ball stud service procedures below require removal of the hub bearing and axle shaft. Removal and installation of upper and lower ball studs require the use of Tool Kit 6289.

(1) Position tools as shown to remove and install ball stud (Fig. 18).

UPPER BALL JOINT (Continued)

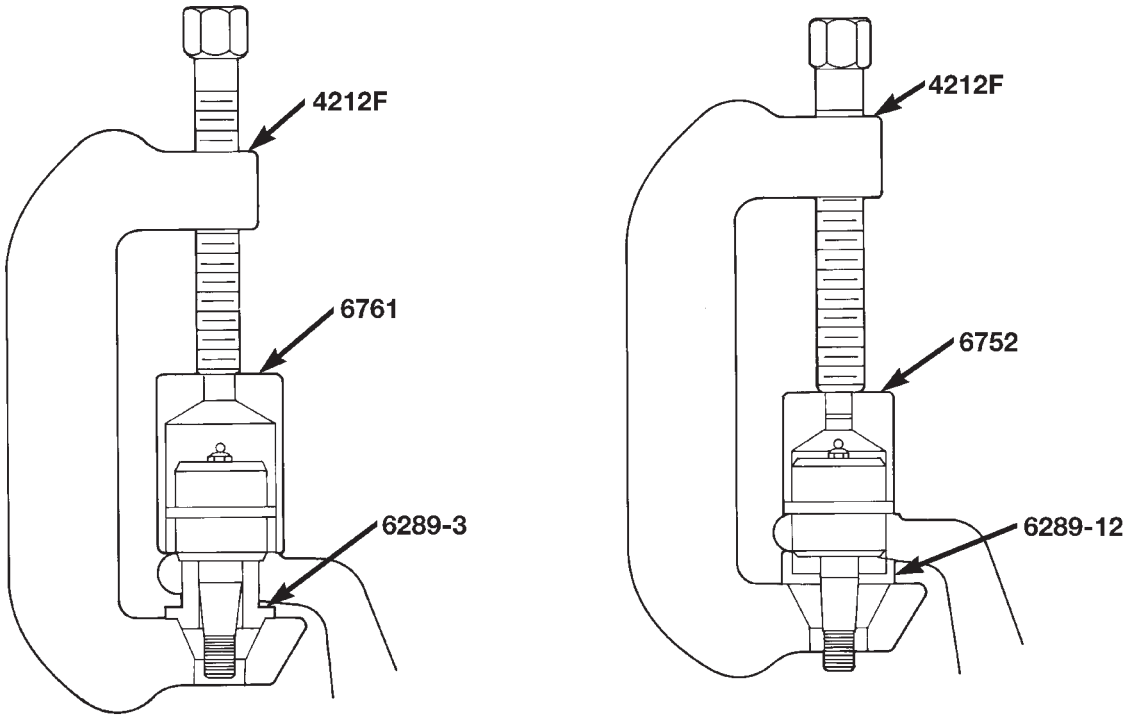

80a7e2a7

Fig. 18 Upper

UPPER CONTROL ARM

DESCRIPTION

The upper suspension arms are hydroformed steel and use rubber bushings at each end of the arm.

OPERATION

The arms mount to the unibody frame rail bracket and the axle brackets. The arm and bushings provide location and react to loads from the axle. The bushings provide isolation from the axle.

REMOVAL

(1) Raise vehicle and support the axle.

(2) Remove the upper suspension arm mounting nut and bolt (Fig. 19) from the axle bracket.

(3) Remove the nut and bolt (Fig. 19) at the frame rail and remove the upper suspension arm.

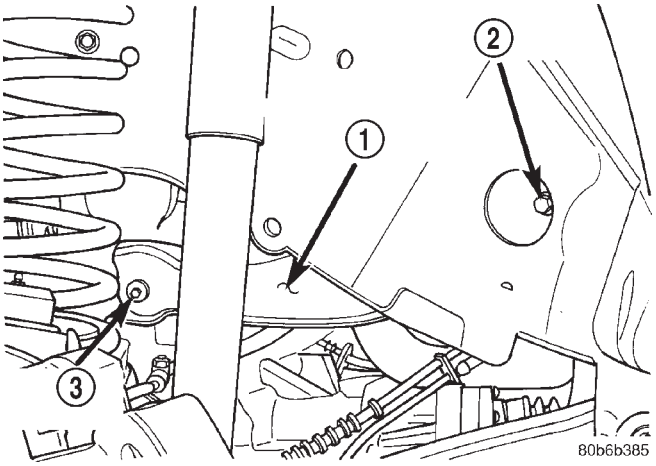

Fig. 19 Upper Suspension Arm

1 - UPPER SUSPENSION ARM
2 - FRAME BOLT
3 - AXLE BOLT

INSTALLATION

(1) Position the upper suspension arm at the axle and frame rail.

(2) Install the bolts and finger tighten the nuts.

(3) Remove the supports and lower the vehicle.

(4) With the vehicle on the ground tighten the axle bracket nut and the frame bracket bolt to 61 N·m (45 ft. lbs.).

(5) Check the alignment if new parts were installed.

REAR SUSPENSION

DESCRIPTION

The rear suspension (Fig. 20) is comprised of :

- Drive axle
- Shock absorbers
- Coil springs
- Lower suspension arms
- Upper suspension arm
- Stabilizer bar

CAUTION: Suspension components with rubber/urethane bushings should be tightened with the vehicle at normal ride height. It is important to have the springs supporting the weight of the vehicle when the fasteners are torqued. This will maintain vehicle ride comfort and prevent premature bushing wear.

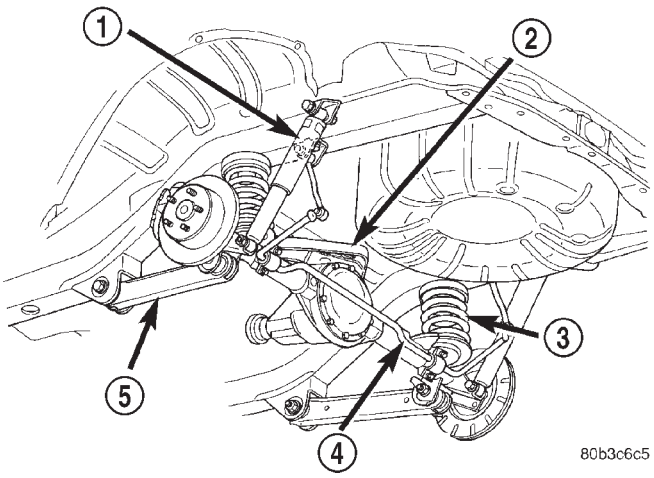

Fig. 20 Rear Suspension

1 - SHOCK
2 - UPPER SUSPENSION ARM
3 - COIL SPRING
4 - STABILIZER BAR
5 - LOWER SUSPENSION ARM

WARNING

WARNING: Suspension components with rubber bushings must be tightened with the vehicle at normal ride height. It is important to have the springs supporting the weight of the vehicle when the fasteners are torqued. If springs are not at their normal ride position, vehicle ride comfort will be affected and cause premature bushing wear.

DIAGNOSIS AND TESTING - REAR SUSPENSION

CONDITION	POSSIBLE CAUSES	CORRECTION
VEHICLE INSTABILITY	1. Loose or worn wheel bearings. 2. Loose, worn or bent suspension components. 3. Tire pressure.	1. Replace wheel bearings. 2. Inspect, tighten or replace components as necessary. 3. Adjust tire pressure.
VEHICLE PULLS TO ONE SIDE	1. Weak or broken spring. 2. Alignment. 3.Tires. 4. Brakes.	1. Replace spring. 2. Align vehicle to specifications. 3. Replace tires. 4. Repair as necassary.
KNOCKING, RATTLING OR SQUEAKING	1. Worn shock bushings. 2. Loose shock mounting. 3. Shock valve. 4. Loose upper ball joint. 5. Loose, worn or bent suspension components.	1. Replace shock. 2. Tighten to specifications. 3. Replace shock. 4. Replace ball joint. 5. Inspect, tighten or replace components as necessary.

REAR SUSPENSION (Continued)

CONDITION	POSSIBLE CAUSES	CORRECTION
IMPROPER TRACKING	1. Loose, worn or bent suspension components. 2. Bent axle.	1. Inspect, tighten or replace components as necessary. 2.Replace axle.

SPECIFICATIONS

TORQUE CHART

TORQUE SPECIFICATIONS

DESCRIPTION	N·m	Ft. Lbs.	In. Lbs.
Shock Absorber Upper Nut	108	80	—
Shock Absorber Lower Nut	115	85	—
Suspension Arm Upper Ball Joint Nut	142	105	—
Suspension Arm Upper Frame Bolts	100	74	—
Ball Joint Plate Bolts	136	100	—
Suspension Arms Lower Axle Bracket Nut	163	120	—
Suspension Arms Lower Frame Bracket Nut	156	115	—
Stabilizer Bar Retainer Bolts	54	40	—
Stabilizer Bar Bar Link Nut	54	40	—
Stabilizer Bar Bracket Link Nut	92	68	—

SPECIAL TOOLS

REAR SUSPENSION

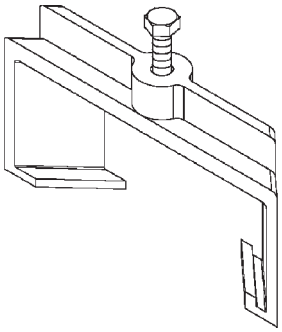

Remover 8278

JOUNCE BUMPER

DESCRIPTION

The jounce bumpers are mounted inside the coil spring, between the axle and the frame rail, to minimize transmission of noise to the passenger compartment.

OPERATION

The jounce bumpers are used to limit suspension travel in compression.

LOWER CONTROL ARM

DESCRIPTION

The lower suspension arms are hydroformed steel and use voided oval bushings at each end of the arm.

LOWER CONTROL ARM (Continued)

OPERATION

The bushings provide isolation from the axle. The arms mount to the unibody frame rail bracket and the axle brackets. The arm and bushings provide location and react to loads.

REMOVAL

(1) Raise the vehicle and support the rear axle.

(2) Remove the lower suspension arm nut and bolt from the axle bracket (Fig. 21).

(3) Remove the nut and bolt (Fig. 21) from the frame rail and remove the lower suspension arm.

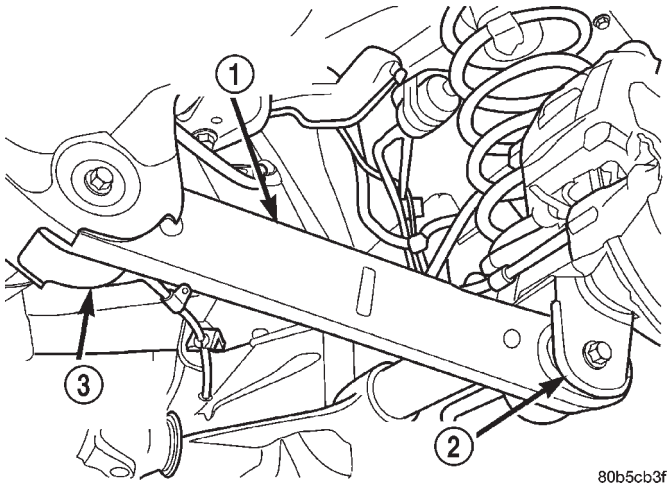

Fig. 21 Lower Suspension Arm

1 - LOWER SUSPENSION ARM
2 - AXLE BRACKET
3 - FRAME BRACKET

INSTALLATION

(1) Position the lower suspension arm in the axle bracket and frame rail bracket.

NOTE: The end of the arm with the oval bushing attaches to the axle bracket.

(2) Install the axle bracket bolt and nut finger tight.

(3) Install the frame rail bracket bolt and nut finger tight.

(4) Remove the supports and lower the vehicle.

(5) With the vehicle on the ground tighten the nut at the frame to 156 N·m (115 ft. lbs.). Tighten the nut at the axle bracket to 163 N·m (120 ft. lbs.).

SHOCK

DESCRIPTION

The top of the shock absorbers are bolted to the body. The bottom of the shocks are bolted to the axle brackets. The standard shocks have conventional twin tube construction and are low pressure gas charged. Gas charging prevents cavitation during rough road operation. Up-Country shocks are mono tube design and are high pressure gas charged.

OPERATION

The shock absorbers dampen jounce and rebound motion of the vehicle over various road conditions and limit suspension rebound travel.

REMOVAL

(1) Raise and support the vehicle. Position a hydraulic jack under the axle to support the axle.

CAUTION: Do not allow the axle to hang from the upper suspension arm ball joint.

(2) Remove the upper nut and bolt from the frame bracket (Fig. 22).

(3) Remove the lower nut and bolt from the axle bracket. Remove the shock absorber.

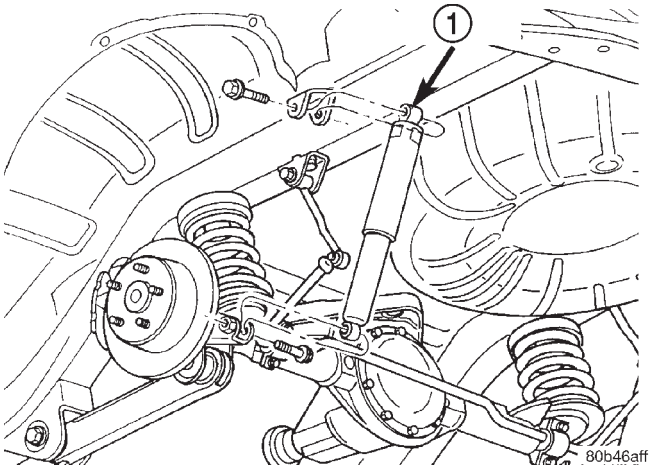

Fig. 22 Shock Absorber

1 - SHOCK

INSTALLATION

(1) Install the shock absorber in the frame bracket and install the bolt and nut.

(2) Install the shock absorber in the axle bracket and install the bolt and nut.

(3) Tighten the upper mounting nuts to 108 N·m (80 ft. lbs.). Tighten the lower mounting nuts to 115 N·m (85 ft. lbs.).

(4) Remove the supports and lower the vehicle.

SPRING

DESCRIPTION

The coil springs mount up in the wheelhouse which is part of the unitized body bracket. A rubber doughnut isolator is located between the top of the spring and the body. The bottom of the spring seats on a axle isolator made of rubber with a steel insert. The isolators provide road noise isolation

OPERATION

The coil springs control ride quality and maintain proper ride height.

REMOVAL

(1) Raise and support the vehicle. Position a hydraulic jack under the axle to support the axle.

(2) Remove the wheel and tire assemblies.

(3) Remove the stabilizer bar link from the stabilizer bar (Fig. 23).

(4) Remove the shock absorber lower bolt from the axle bracket.

(5) Lower the hydraulic jack and tilt the axle and remove the coil spring (Fig. 23).

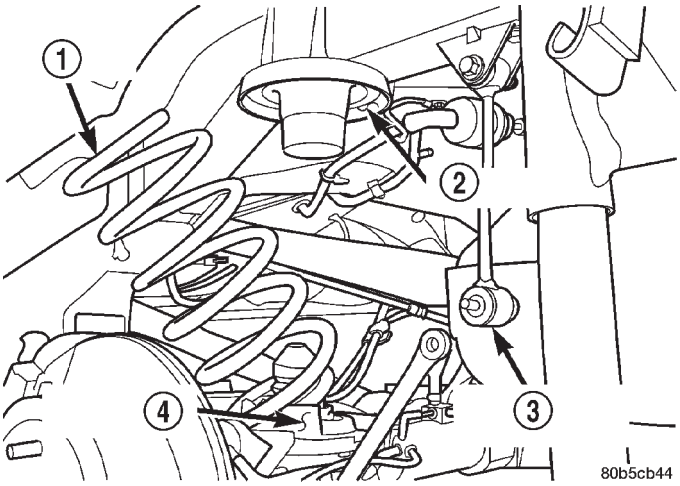

Fig. 23 Coil Spring

1 - COIL SPRING
2 - ISOLATOR
3 - STABILIZER LINK
4 - ISOLATOR

(6) Remove and inspect the upper and lower spring isolators (Fig. 23).

INSTALLATION

(1) Install the upper isolator.

(2) Install the lower isolator with the isolator locator nub in the axle pad hole (Fig. 24).

(3) Pull down on the axle and position the coil spring in the lower isolator.

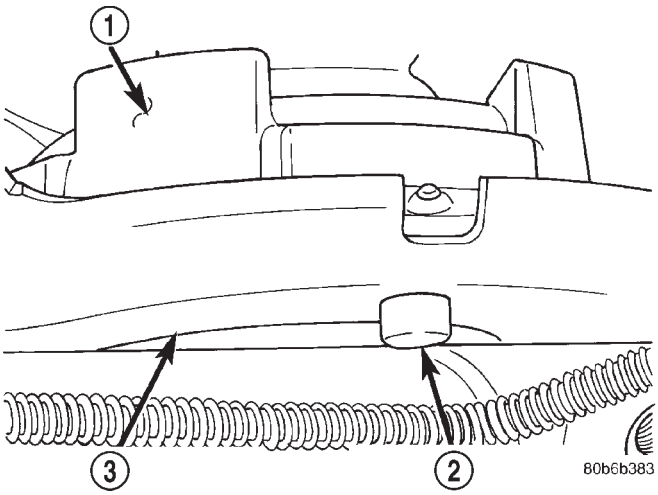

Fig. 24 Isolator Locator Nub

1 - LOWER ISOLATOR
2 - LOCATOR NUB
3 - AXLE SPRING PAD

CAUTION: Ensure the spring is positioned on the lower isolator with the end of the spring coil against the isolator spring locator (Fig. 25).

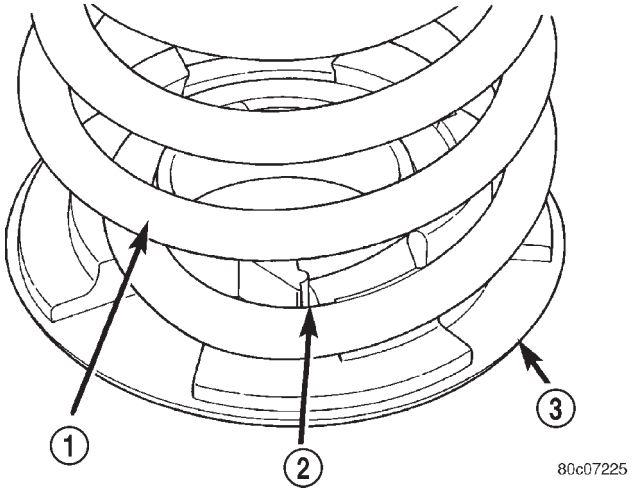

Fig. 25 Isolator Spring Locator - Typical

1 - LOWER ISOLATOR
2 - SPRING LOCATOR
3 - COIL SPRING

(4) Raise the axle with the hydraulic jack.

(5) Install the shock absorber to the axle bracket and tighten to specification.

(6) Install the stabilizer bar link to the stabilizer bar.

(7) Install the wheel and tire assemblies.

(8) Remove the supports and lower the vehicle.

(9) Tighten the stabilizer bar links to specification.

STABILIZER BAR

DESCRIPTION

The stabilizer bar extends across the back side of the rear axle. Links are connected between the bar and frame rail brackets. The stabilizer bar and links are isolated by rubber bushings.

OPERATION

The stabilizer bar is used to control vehicle body roll, during turns. The bar helps control the vehicle body in relationship to the suspension.

REMOVAL

(1) Raise and support the vehicle.
(2) Remove the stabilizer bar links from stabilizer bar and frame mount. (Fig. 26).
(3) Remove the stabilizer bar retainer bolts.
(4) Remove the stabilizer bar.

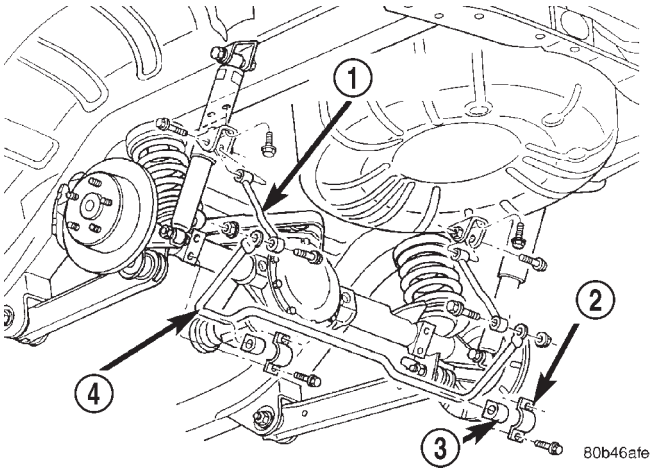

Fig. 26 Rear Stabilizer Bar

1 - LINK
2 - RETAINER
3 - BUSHING
4 - STABILIZER BAR

INSTALLATION

(1) Position the stabilizer bar on the axle and install the retainers and bolts. Ensure the bar is centered with equal spacing on both sides. Tighten the bolts to 54 N·m (40 ft. lbs.).
(2) Install the links to the stabilizer bar and frame brackets.
(3) Tighten the nuts at the stabilizer bar to 54 N·m (40 ft. lbs.).
(4) Tighten the nuts at the frame brackets to 92 N·m (68 ft. lbs.).
(5) Remove support and lower the vehicle.

UPPER BALL JOINT

DESCRIPTION - UPPER SUSPENSION ARM, BUSHINGS, AND BALL JOINT

The suspension arm uses vertical spool bushings to isolate road noise. The suspension arm is bolted through bushings to cage nuts in the body and a ball joint plate to the top of the differential housing.

OPERATION - UPPER SUSPENSION ARM, BUSHINGS, AND BALL JOINT

The upper suspension arm provides fore/aft and lateral location of the rear axle. The suspension arm travel is limited through the use of jounce bumpers in compression and shock absorbers in rebound.

REMOVAL

(1) Raise and support the vehicle.
(2) Support the rear axle with a hydraulic jack.
(3) Remove the ball joint nut from the top of the upper suspension arm (Fig. 27).

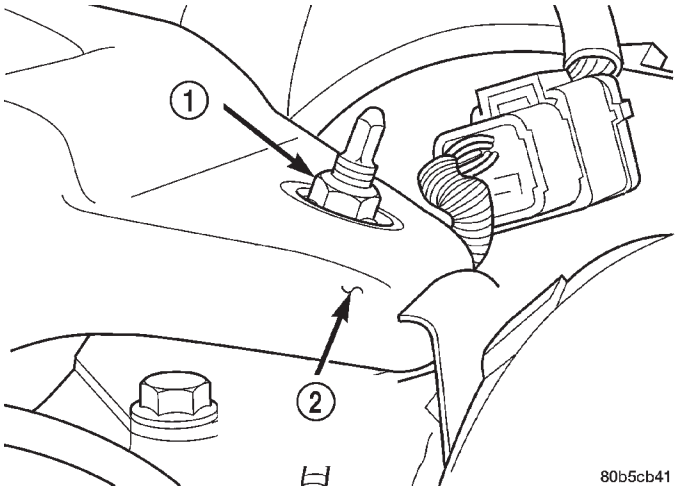

Fig. 27 Ball Joint Nut

1 - BALL JOINT NUT
2 - UPPER SUSPENSION ARM

(4) Separate ball joint from the arm with Remover 8278 (Fig. 28).

NOTE: It may be necessary to strike the upper control arm with a hammer to separate the ball joint from the arm.

(5) Remove the ball joint mounting bolts (Fig. 29)from the differential housing.
(6) Remove the ball joint from the differential housing.

UPPER BALL JOINT (Continued)

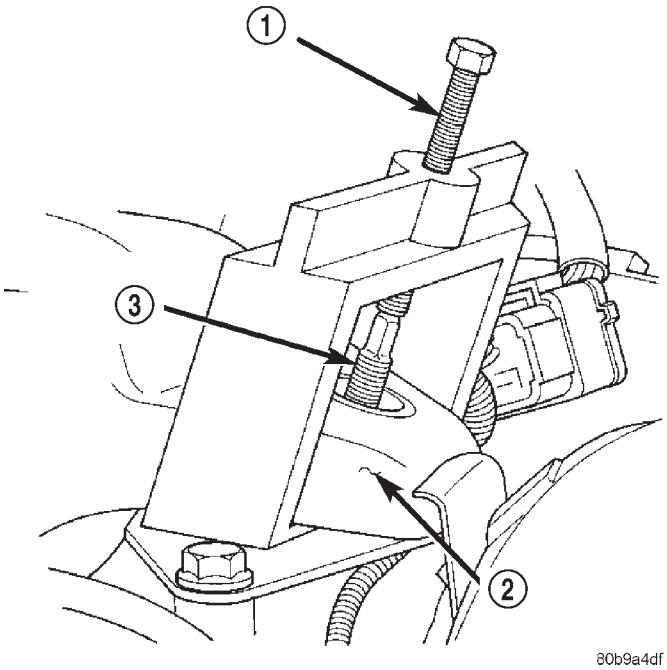

Fig. 28 Separate Ball Joint

1 - REMOVER - 8278
2 - UPPER SUSPENSION ARM
3 - BALL JOINT STUD

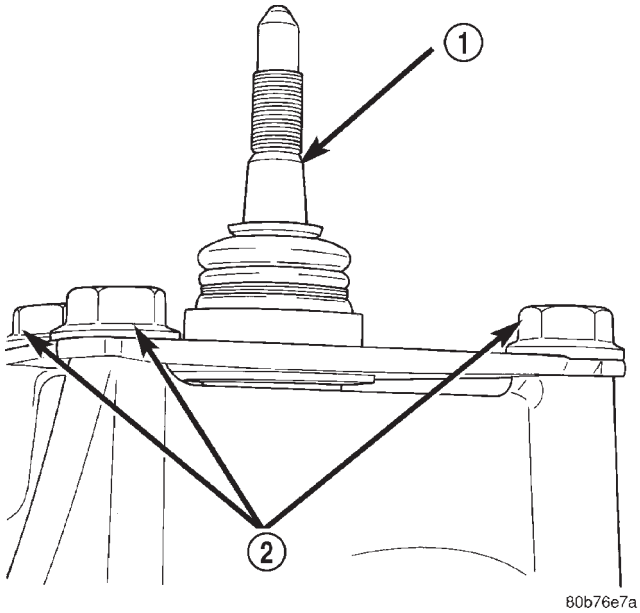

Fig. 29 Ball Joint Mounting Bolts

1 - BALL JOINT
2 - MOUNTING BOLTS

INSTALLATION

(1) Install the ball joint on the differential housing.

(2) Install the ball joint mounting bolts and tighten to 136 N·m (100 ft. lbs.).

(3) Raise the rear axle with a hydraulic jack to align the upper arm with the ball joint.

(4) Pull the arm down on the ball joint stud and install a **new** nut. Tighten the nut to 142 N·m (105 ft. lbs.).

(5) Remove the supports and lower the vehicle.

UPPER CONTROL ARM

DESCRIPTION

The suspension arm uses vertical spool bushings to isolate road noise. The suspension arm is bolted through bushings to cage nuts in the body and a ball joint plate to the top of the differential housing.

OPERATION

The upper suspension arm provides fore/aft and lateral location of the rear axle. The suspension arm travel is limited through the use of jounce bumpers in compression and shock absorbers in rebound.

REMOVAL

(1) Raise and support the vehicle.

(2) Support the rear axle with a hydraulic jack.

(3) Remove the park brake cables and brake hose from the arm (Fig. 30).

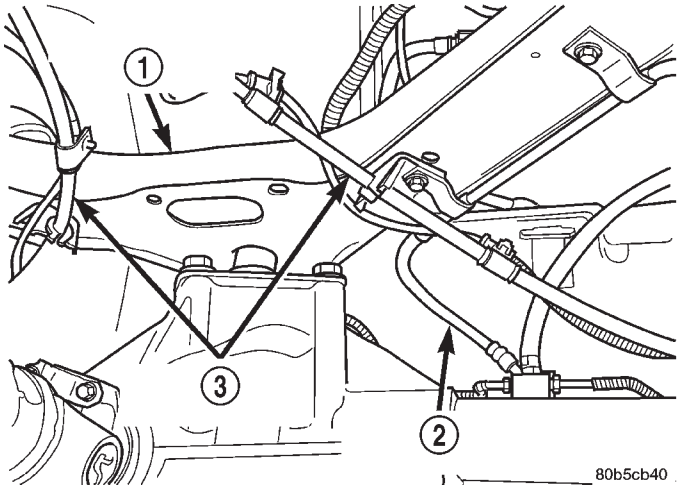

Fig. 30 Park Brake Cables And Brake Hose

1 - UPPER SUSPENSION ARM
2 - REAR BRAKE HOSE
3 - PARK BRAKE CABLES

(4) Remove the ball joint nut from the top of the upper suspension arm (Fig. 31).

(5) Separate ball joint from the arm with Remover 8278 (Fig. 32).

UPPER CONTROL ARM (Continued)

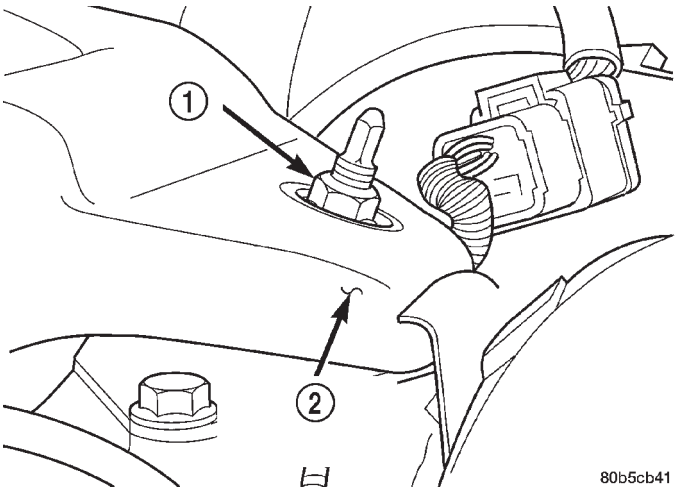

Fig. 31 Ball Joint Nut

1 - BALL JOINT NUT
2 - UPPER SUSPENSION ARM

NOTE: It may be necessary to strike the upper control arm with a hammer to separate the ball joint from the arm.

(6) Remove the upper suspension arm mounting bolts and remove the arm (Fig. 33).

INSTALLATION

(1) Position the upper suspension arm in the frame rail brackets.

(2) Install the mounting bolts and tighten to 100 N·m (74 ft. lbs.).

(3) Pull the arm down on the ball joint stud and install a **new** nut. Tighten the nut to 142 N·m (105 ft. lbs.).

(4) Install the park brake cables and brake hose to the arm.

(5) Remove the supports and lower the vehicle.

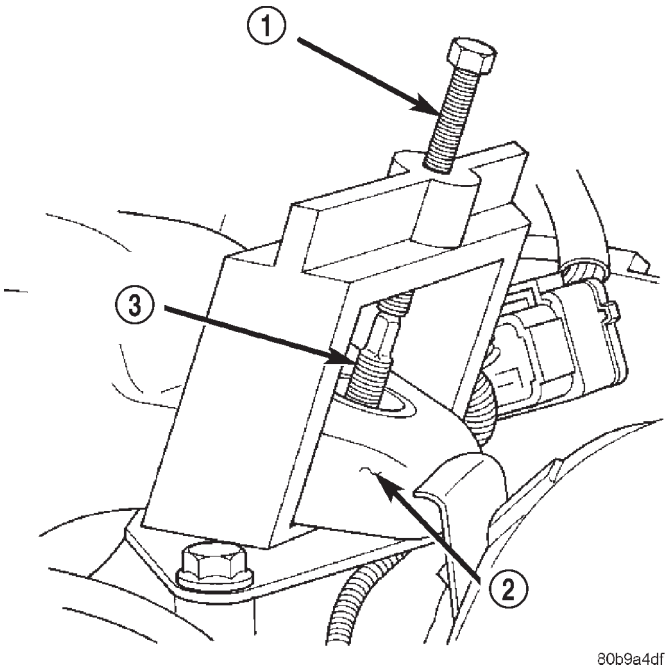

Fig. 32 Separate Ball Joint

1 - REMOVER - 8278
2 - UPPER SUSPENSION ARM
3 - BALL JOINT STUD

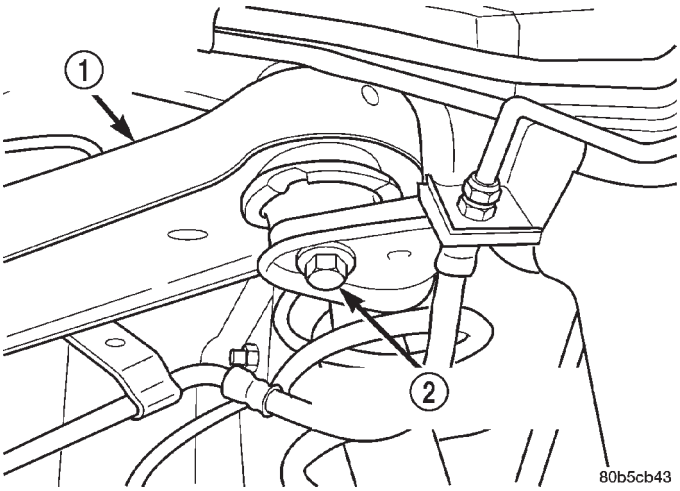

Fig. 33 Upper Suspension Arm Mounting Bolt

1 - UPPER SUSPENSION ARM
2 - MOUNTING BOLT

DIFFERENTIAL & DRIVELINE

TABLE OF CONTENTS

page

PROPELLER SHAFT 1
FRONT TUBE AXLE 15
FRONT AXLE - 186FBI 16
REAR AXLE - 198RBI 49
REAR AXLE - 226RBA 87

PROPELLER SHAFT

TABLE OF CONTENTS

page

PROPELLER SHAFT
DESCRIPTION 1
OPERATION 1
DIAGNOSIS AND TESTING 2
PROPELLER SHAFT 2
STANDARD PROCEDURE 4
PROPELLER SHAFT 4
SPECIFICATIONS 6
SPECIAL TOOLS 7
PROPELLER SHAFT - FRONT
REMOVAL 7
INSTALLATION. 7
PROPELLER SHAFT - FRONT 4.7L
REMOVAL 7
INSTALLATION. 8
PROPELLER SHAFT - REAR
REMOVAL 8
INSTALLATION. 9
SINGLE CARDAN UNIVERSAL JOINTS
DISASSEMBLY. 9
ASSEMBLY 9
DOUBLE CARDAN UNIVERSAL JOINTS
DISASSEMBLY. 10
ASSEMBLY 11

PROPELLER SHAFT

DESCRIPTION

A propeller shaft (Fig. 1) is the shaft which connects the transmission/transfer case to the axle differential. This is the link through which the engine power is transmitted to the axle.

The propeller shaft is designed and built with the yoke lugs in line with each other which is called zero phasing. This design produces the smoothest running condition, an out-of-phase shaft can cause a vibration.

Tubular propeller shafts are balanced by the manufacturer with weights spot welded to the tube.

Two styles of front propeller shafts are used on this vehicle. The 4.7L engine propeller shaft uses a single cardan U-joint at the axle end and a double cardan U-joint at the transfer case end. The rest uses a Constant Velocity (C/V) joint at both the axle and transfer case end of the propeller shaft. The C/V joint at the axle end contracts and extends (plunges) as necessary to accommodate the variations in length necessary due to suspension travel. The C/V joint at the transfer case end of the propeller shaft is fixed. The two C/V joints are connected by a hollow tube shaft. The shaft length is not adjustable and does vary according to application.

OPERATION

The propeller shaft must operate through constantly changing relative angles between the transmission and axle when going over various road surfaces. It must also be capable of changing length while transmitting torque. The axle rides suspended by springs in a floating motion. This is accomplished through universal joints, which permit the propeller shaft to operate at different angles. The slip joints (or yokes) permit contraction or expansion.

Before undercoating a vehicle, the propeller shaft and the U-joints should be covered to prevent an out-of-balance condition and driveline vibration.

PROPELLER SHAFT (Continued)

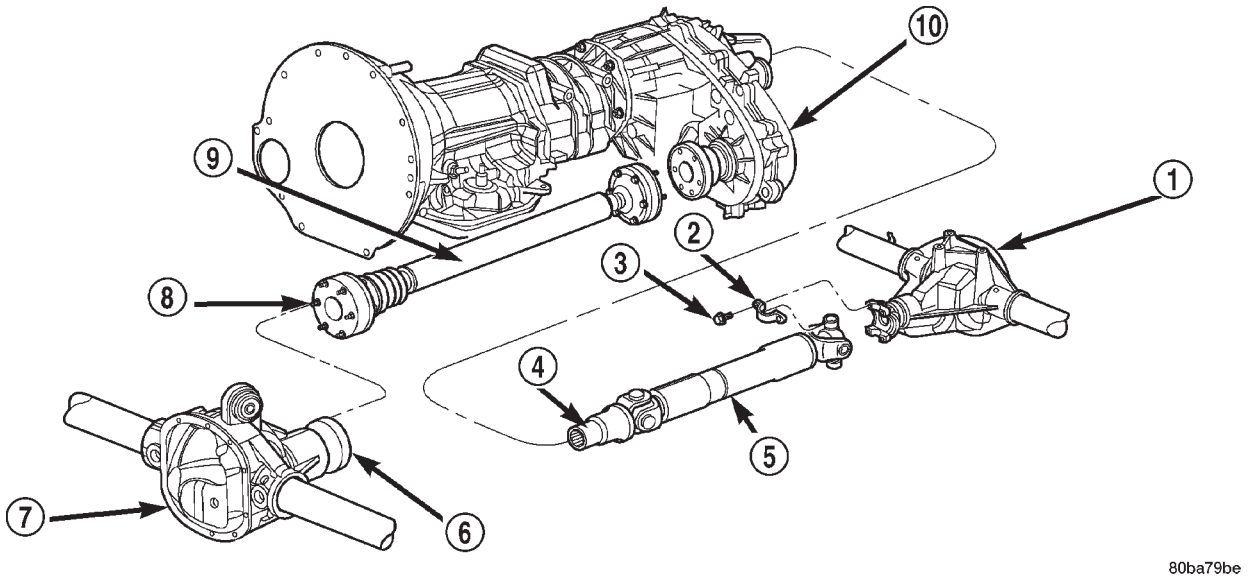

Fig. 1 Propeller Shafts - Except 4.7L

1 - REAR AXLE
2 - STRAP
3 - BOLT
4 - SLIP YOKE
5 - REAR PROPELLER SHAFT
6 - PINION FLANGE
7 - FRONT AXLE
8 - BOLT
9 - FRONT PROPELLER SHAFT
10 - TRANSFER CASE

CAUTION: Use original equipment replacement parts for attaching the propeller shafts. The specified torque must always be applied when tightening the fasteners.

DIAGNOSIS AND TESTING - PROPELLER SHAFT

VIBRATION

Tires that are out-of-round, or wheels that are unbalanced, will cause a low frequency vibration. (Refer to 22 - TIRES/WHEELS - DIAGNOSIS AND TESTING)

Brake rotors that are unbalanced will cause a harsh, low frequency vibration. (Refer to 5 - BRAKES - DIAGNOSIS AND TESTING)

Driveline vibration can also result from loose or damaged engine mounts.

Propeller shaft vibration increases as the vehicle speed is increased. A vibration that occurs within a specific speed range is not usually caused by a propeller shaft being unbalanced. Defective universal joints, or an incorrect propeller shaft angle, are usually the cause of such a vibration.

PROPELLER SHAFT (Continued)

DRIVELINE VIBRATION

Drive Condition	Possible Cause	Correction
Propeller Shaft Noise	1) Undercoating or other foreign material on shaft.	1) Clean exterior of shaft and wash with solvent.
	2) Loose U-joint clamp screws.	2) Install new clamps and screws and tighten to proper torque.
	3) Loose or bent U-joint yoke or excessive runout.	3) Install new yoke.
	4) Incorrect driveline angularity.	4) Measure and correct driveline angles.
	5) Rear spring center bolt not in seat.	5) Loosen spring u-bolts and seat center bolt.
	6) Worn U-joint bearings.	6) Install new U-joint.
	7) Propeller shaft damaged or out of balance.	7) Installl new propeller shaft.
	8) Broken rear spring.	8) Install new rear spring.
	9) Excessive runout or unbalanced condition.	9) Re-index propeller shaft, test, and evaluate.
	10) Excessive drive pinion gear shaft runout.	10) Re-index propeller shaft and evaluate.
	11) Excessive axle yoke deflection.	11) Inspect and replace yoke if necessary.
	12) Excessive transfer case runout.	12) Inspect and repair as necessary.
Universal Joint Noise	1) Loose U-joint clamp screws.	1) Install new clamps and screws and tighten to proper torque.
	2) Lack of lubrication.	2) Replace U-joints as necessary.

BALANCE

NOTE: Removing and re-indexing the propeller shaft 180° relative to the yoke may eliminate some vibrations.

If propeller shaft is suspected of being unbalanced, it can be verified with the following procedure:

(1) Raise the vehicle.

(2) Clean all the foreign material from the propeller shaft and the universal joints.

(3) Inspect the propeller shaft for missing balance weights, broken welds, and bent areas. **If the propeller shaft is bent, it must be replaced.**

(4) Inspect the universal joints to ensure that they are not worn, are properly installed, and are correctly aligned with the shaft.

(5) Check the universal joint clamp screws torque.

(6) Remove the wheels and tires. Install the wheel lug nuts to retain the brake drums or rotors.

(7) Mark and number the shaft six inches from the yoke end at four positions 90° apart.

(8) Run and accelerate the vehicle until vibration occurs. Note the intensity and speed the vibration occurred. Stop the engine.

(9) Install a screw clamp at position 1 (Fig. 2).

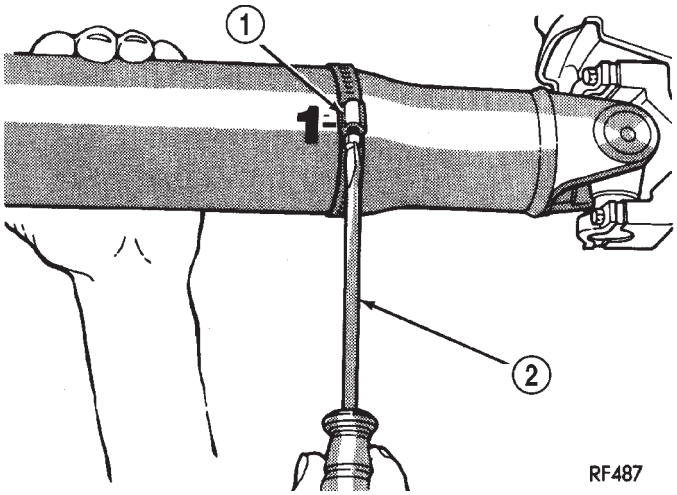

Fig. 2 Clamp Screw At Position 1

1 - CLAMP
2 - SCREWDRIVER

(10) Start the engine and re-check for vibration. If there is little or no change in vibration, move the

PROPELLER SHAFT (Continued)

clamp to one of the other three positions. Repeat the vibration test.

(11) If there is no difference in vibration at the other positions, the source of the vibration may not be propeller shaft.

(12) If the vibration decreased, install a second clamp (Fig. 3) and repeat the test.

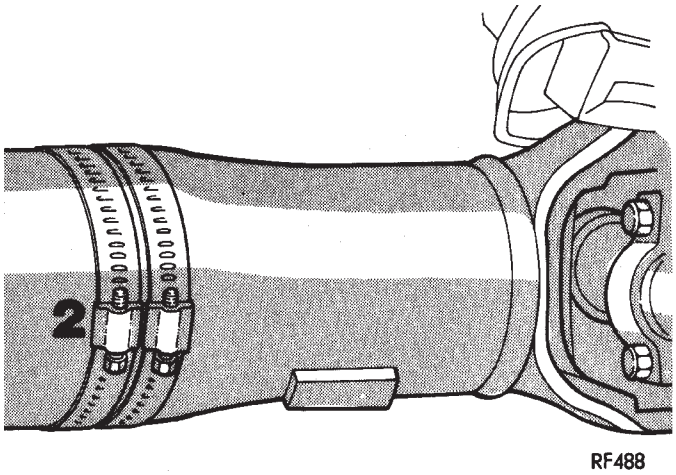

Fig. 3 Two Clamp Screws At The Same Position

(13) If the additional clamp causes an additional vibration, separate the clamps (1/4 inch above and below the mark). Repeat the vibration test (Fig. 4).

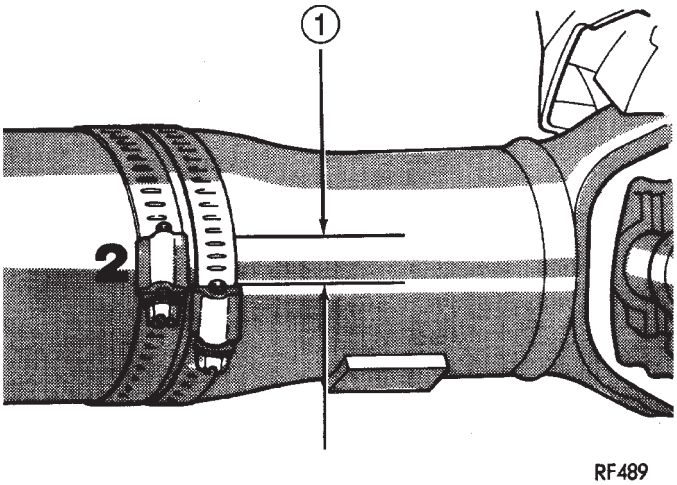

Fig. 4 Clamp Screws Separated

1 - ½ INCH

(14) Increase distance between the clamp screws and repeat the test until the amount of vibration is at the lowest level. Bend the slack end of the clamps so the screws will not loosen.

(15) If the vibration remains unacceptable, apply the same steps to the front end of the propeller shaft.

(16) Install the wheel and tires. Lower the vehicle.

RUNOUT

(1) Remove dirt, rust, paint, and undercoating from the propeller shaft surface where the dial indicator will contact the shaft.

(2) The dial indicator must be installed perpendicular to the shaft surface.

(3) Measure runout at the center and ends of the shaft sufficiently far away from weld areas to ensure that the effects of the weld process will not enter into the measurements.

(4) Refer to Runout Specifications chart.

(5) If the propeller shaft runout is out of specification, remove the propeller shaft, index the shaft 180°, and re-install the propeller shaft. Measure shaft runout again.

(6) If the propeller shaft runout is now within specifications, mark the shaft and yokes for proper orientation.

(7) If the propeller shaft runout is not within specifications, verify that the runout of the transmission/transfer case and axle are within specifications. Correct as necessary and re-measure propeller shaft runout.

(8) Replace the propeller shaft if the runout still exceeds the limits.

RUNOUT SPECIFICATIONS

Front of Shaft	0.020 in. (0.50 mm)
Center of Shaft	0.025 in. (0.63 mm)
Rear of Shaft	0.020 in. (0.50 mm)

note:
Measure front/rear runout approximately 3 inches (76 mm) from the weld seam at each end of the shaft tube for tube lengths over 30 inches. For tube lengths under 30 inches, the maximum allowed runout is 0.020 in. (0.50 mm) for the full length of the tube.

STANDARD PROCEDURES - PROPELLER SHAFT ANGLE

The procedure applies to both the front propeller shafts and the rear propeller shaft. To obtain the front (output) angle on the C/V front propeller shaft, the inclinometer is placed on the machined ring of the pinion flange. To obtain the propeller shaft angle measurement on the C/V front propeller shaft, the inclinometer is placed on the propeller shaft tube.

(1) Raise and support the vehicle at the axles as level as possible. Allow the wheels and propeller shaft to turn.

(2) Remove any external bearing snap rings from universal joint if equipped, so the inclinometer base will sits flat.

PROPELLER SHAFT (Continued)

(3) Rotate the shaft until transmission/transfer case output yoke bearing cap is facing downward, if necessary.

Always make measurements from front to rear.

(4) Place Inclinometer on yoke bearing cap, or the pinion flange ring, (A) parallel to the shaft (Fig. 5). Center bubble in sight glass and record measurement.

This measurement will give you the transmission or Output Yoke Angle (A).

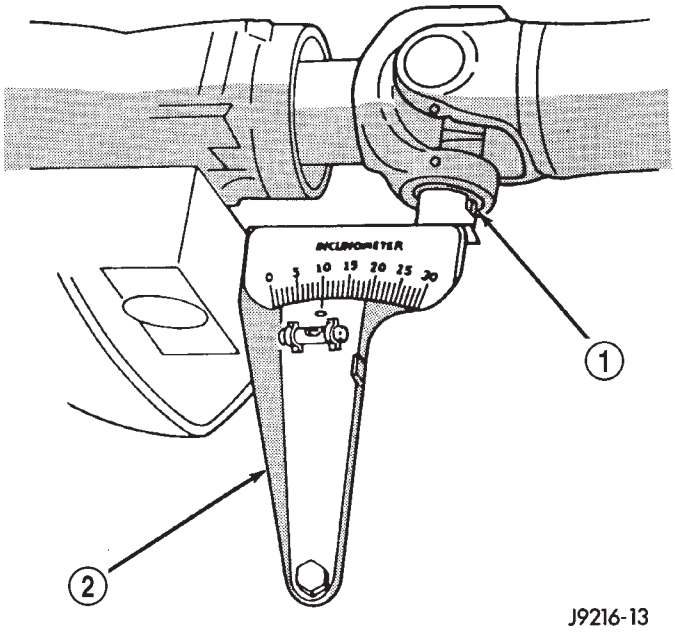

Fig. 5 Front (Output) Angle Measurement (A)

1 - SLIP YOKE BEARING CAP
2 - INCLINOMETER

(5) Rotate propeller shaft 90 degrees and place Inclinometer on yoke bearing cap, or propeller shaft tube on C/V propeller shaft, parallel to the shaft (Fig. 6). Center bubble in sight glass and record measurement. This measurement can also be taken at the rear end of the shaft.

This measurement will give you the propeller shaft angle (C).

(6) Subtract smaller figure from larger (C minus A) to obtain transmission output operating angle.

(7) Rotate propeller shaft 90 degrees and place Inclinometer on pinion yoke bearing cap parallel to the shaft (Fig. 7). Center bubble in sight glass and record measurement.

This measurement will give you the pinion shaft or input yoke angle (B).

(8) Subtract smaller figure from larger (C minus B) to obtain axle Input Operating Angle.

Refer to rules given below and the example in (Fig. 8) for additional information.

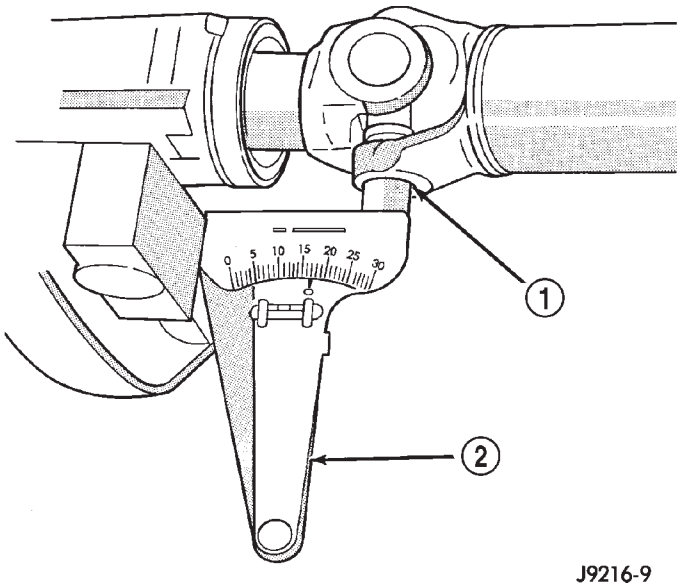

Fig. 6 Propeller Shaft Angle Measurement (C)

1 - SHAFT YOKE BEARING CAP
2 - INCLINOMETER

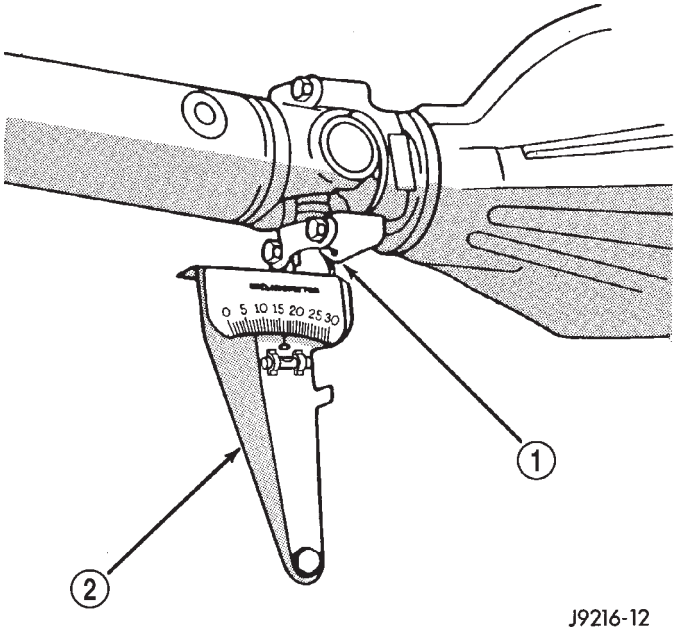

Fig. 7 Rear (Input) Angle Measurement (B)

1 - PINION YOKE BEARING CAP
2 - INCLINOMETER

- Good cancellation of U-joint operating angles (within 1°).
- Operating angles less than 3°.
- Operating angles less than 10° for double cardan U-joint.
- At least 1/2 of one degree continuous operating (propeller shaft) angle.

SPECIFICATIONS (Continued)

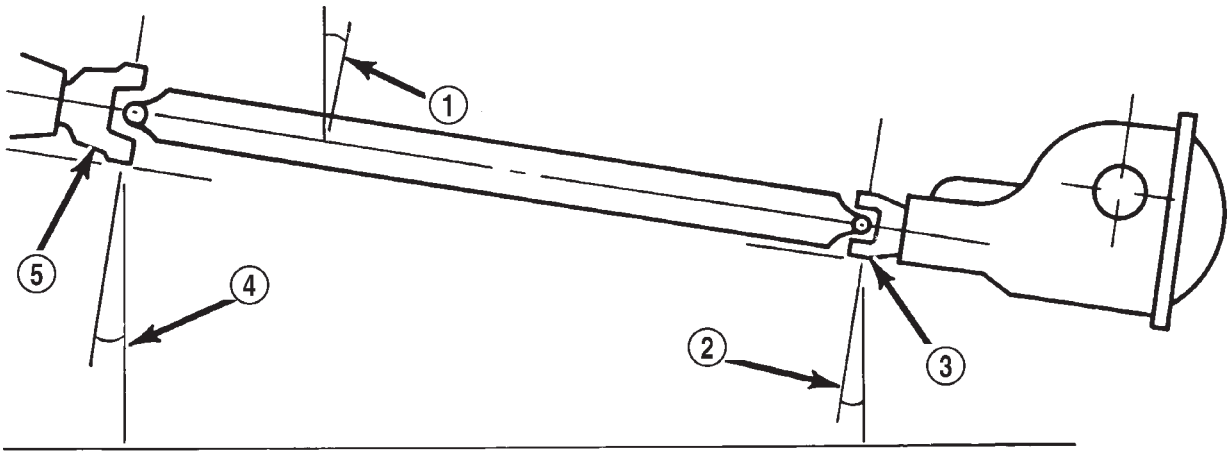

Horizontal Level

(A) Output Yoke = 3.0° or 4.9°
(C) Prop. Shaft = 4.9° or -3.0°

Transmission Output Operating Angle 1.9°

(B) Axle Input Yoke = 3.2° or 4.9°
(C) Prop. Shaft = 4.9° or -3.2°

Axle Input Operating Angle 1.7°

Trans. Output Operating Angle 1.9°
Axle Input Operating Angle -1.7°

Amount of U-Joint Cancellation 0.2°

J9316-3

Fig. 8 Universal Joint Angle Example

1 - 4.9° Angle (C)
2 - 3.2° Angle (B)
3 - Input Yoke
4 - 3.0° Angle (A)
5 - Output Yoke

SPECIFICATIONS

PROPELLER SHAFT

TORQUE SPECIFICATIONS

DESCRIPTION	N·m	Ft. Lbs.	In. Lbs.
Front Shaft - Companion Flange Bolts	32	24	—
Rear Shaft - Yoke Nuts	19	14	—

SPECIAL TOOLS

SPECIAL TOOLS

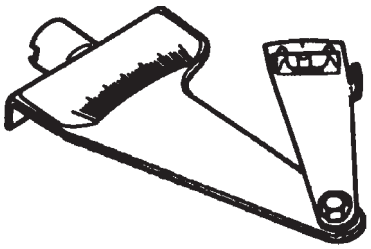

Inclinometer 7663

PROPELLER SHAFT - FRONT

REMOVAL

NOTE: Different length propeller shafts are used for different drivetrain applications. Ensure that the correct propeller shaft is used.

(1) Place vehicle on floor or drive-on hoist with full weight of vehicle on suspension.
(2) Shift the transmission and transfer case, if necessary, into the Neutral position.
(3) Measure the distance from the face of the C/V joint cup to the end of the C/V joint boot (Fig. 9).

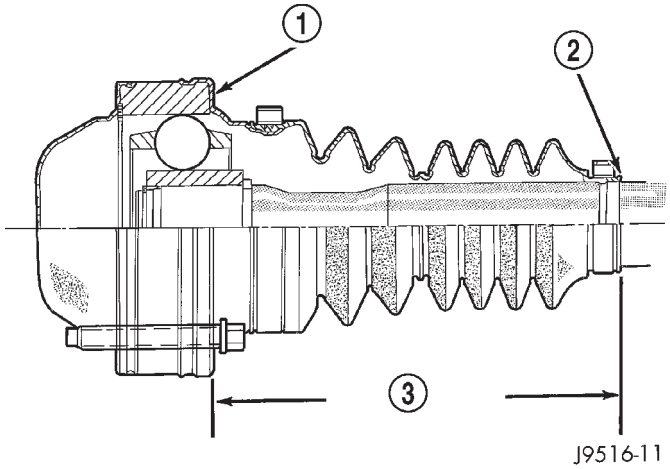

Fig. 9 Measurement

1 - C/V JOINT CUP
2 - C/V BOOT END
3 - MEASUREMENT

(4) The correct length is 142.7 mm (5.61 in.).

NOTE: If the measurement is not correct, the wrong shaft may have been installed or a mating component (front axle or transfer case) may be installed incorrectly. Investigate and correct as necessary.

(5) Mark a line across the companion flange at the transfer case and C/V joint at the rear of the front propeller shaft for installation reference.
(6) Mark a line across the C/V joints and the pinion companion flanges for installation reference.
(7) Remove bolts from the front C/V joint to the pinion companion flange.
(8) Remove bolts from the rear C/V joint to the transfer case companion flange.
(9) Push the propeller shaft forward to clear transfer case companion flange and remove the shaft.

INSTALLATION

NOTE: Different length propeller shafts are used for different drivetrain applications. Ensure that the correct propeller shaft is used.

(1) Install the shaft between companion flanges.
(2) The shaft should rotate freely in the pinion flange.
(3) Align marks on the companion flanges with the marks on the C/V joints.
(4) Install bolts to the front C/V joint and tighten bolts to 32 N·m (24 ft. lbs.).
(5) Install the bolts to the rear C/V joint and tighten bolts to 32 N·m (24 ft. lbs.).
(6) Verify propeller shaft length.
(7) Lower vehicle.

PROPELLER SHAFT - FRONT 4.7L

REMOVAL

(1) Raise and support vehicle.
(2) Remove crossmember/skid plate as necessary to gain access to the propeller shaft.
(3) Shift transmission and transfer case, if necessary into Neutral.
(4) Mark a line across the yoke at the transfer case, link yoke and propeller shaft yoke at the rear of the front propeller shaft for installation reference (Fig. 10).
(5) Mark a line across the propeller shaft yoke and pinion shaft yoke for installation reference.
(6) Remove the U-joint strap bolts at the pinion shaft yoke (Fig. 11).
(7) Remove bolts holding rear universal joint to the transfer case yoke.
(8) Separate the rear universal joint from the transfer case yoke.

PROPELLER SHAFT - FRONT 4.7L (Continued)

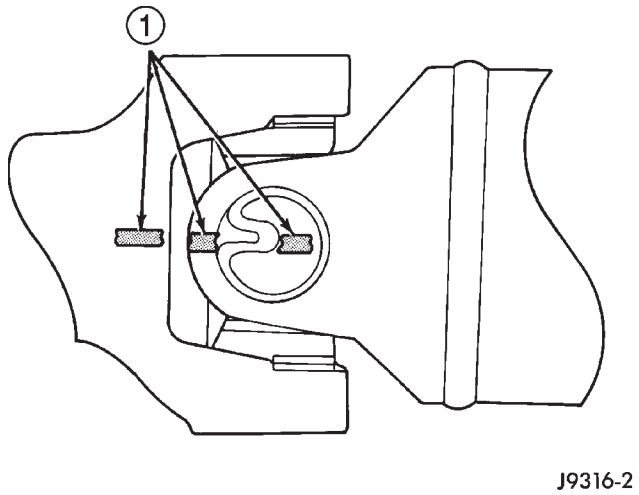

Fig. 10 Reference Marks on Yokes

1 - REFERENCE MARKS

(9) Push rear of propeller shaft upward to clear transfer case yoke.

(10) Separate front universal joint from front axle.

(11) Separate propeller shaft from vehicle.

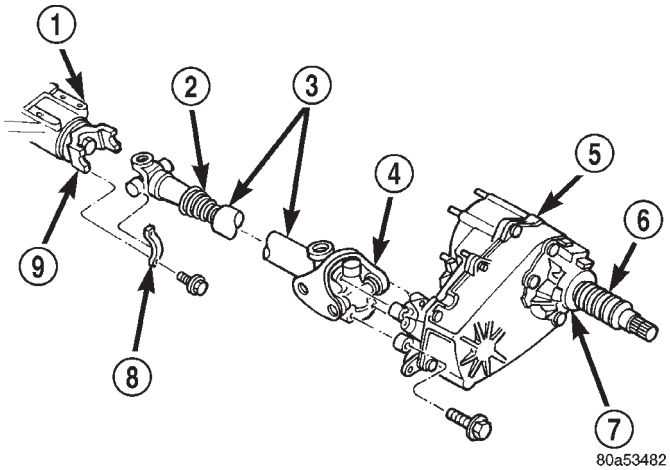

Fig. 11 Front Propeller Shaft - 4.7L

1 - FRONT AXLE
2 - BOOT
3 - PROPELLER SHAFT
4 - DOUBLE CARDAN U-JOINT
5 - TRANSFER CASE
6 - BOOT
7 - SLINGER
8 - CLAMP
9 - YOKE

INSTALLATION

(1) Position front propeller shaft under vehicle with rear universal joint over the transfer case yoke.

(2) Place front universal joint into the axle pinion yoke.

(3) Align mark on the rear link yoke and universal joint to the mark on the transfer case yoke.

(4) Loosely install bolts to hold universal joint to transfer case yoke.

(5) Align mark on front universal joint to the mark on the axle pinion yoke.

(6) Tighten the U-joint strap/clamp bolts at the axle yoke to 19 N·m (14 ft. lbs.).

(7) Tighten the universal joint to transfer case bolts to 27 N·m (20 ft. lbs.).

(8) Lower the vehicle.

PROPELLER SHAFT - REAR

REMOVAL

(1) Raise and support vehicle on safety stands.

(2) Shift the transmission and transfer case if necessary, to their neutral positions.

(3) Mark a line across the axle pinion yoke and the propeller shaft yoke for installation reference.

(4) Remove the bolts holding the universal joint clamps to the pinion yoke.

(5) Slide the slip yoke off of the transmission, or transfer case, output shaft and remove the propeller shaft (Fig. 12).

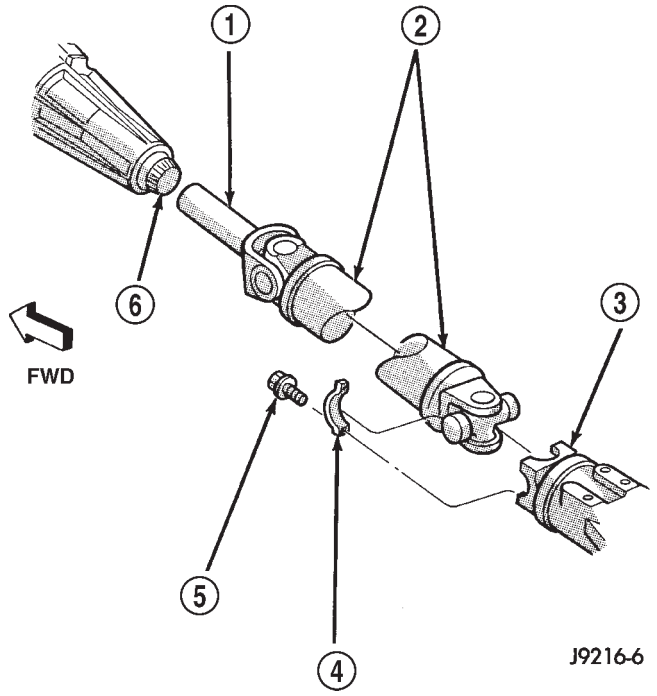

Fig. 12 Rear Propeller Shaft

1 - SLIDING YOKE
2 - PROPELLER SHAFT
3 - PINION YOKE
4 - CLAMP/STRAP
5 - BOLT
6 - OUTPUT SHAFT

PROPELLER SHAFT - REAR (Continued)

INSTALLATION

(1) Slide the slip yoke on the transmission, or transfer case, output shaft.

(2) Align the installation reference marks made on the propeller shaft and pinion yoke.

(3) Position universal joint into pinion yoke.

(4) Install the universal joint clamp and clamp bolts to the pinion yoke. Tighten bolts to 19 N·m (14 ft. lbs.).

(5) Lower the vehicle.

SINGLE CARDAN UNIVERSAL JOINTS

DISASSEMBLY

Individual components of cardan universal joints are not serviceable. If worn or leaking, they must be replaced as an assembly.

(1) Remove the propeller shaft.

(2) Using a soft drift, tap the outside of the bearing cap assembly to loosen snap ring.

(3) Remove snap rings from both sides of yoke (Fig. 13).

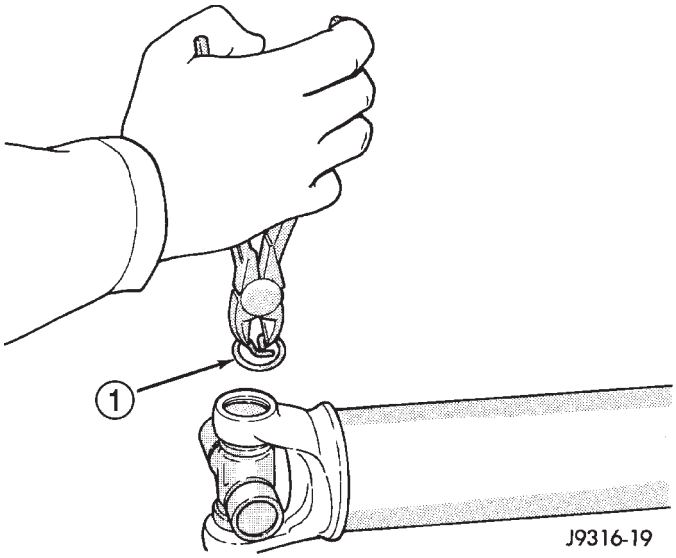

Fig. 13 Remove Snap Ring

1 - SNAP RING

(4) Set the yoke in an arbor press or vise with a socket whose inside diameter is large enough to receive the bearing cap positioned beneath the yoke.

(5) Position the yoke with the grease fitting, if equipped, pointing up.

(6) Place a socket with an outside diameter smaller than the upper bearing cap on the upper bearing cap and press the cap through the yoke to release the lower bearing cap (Fig. 14).

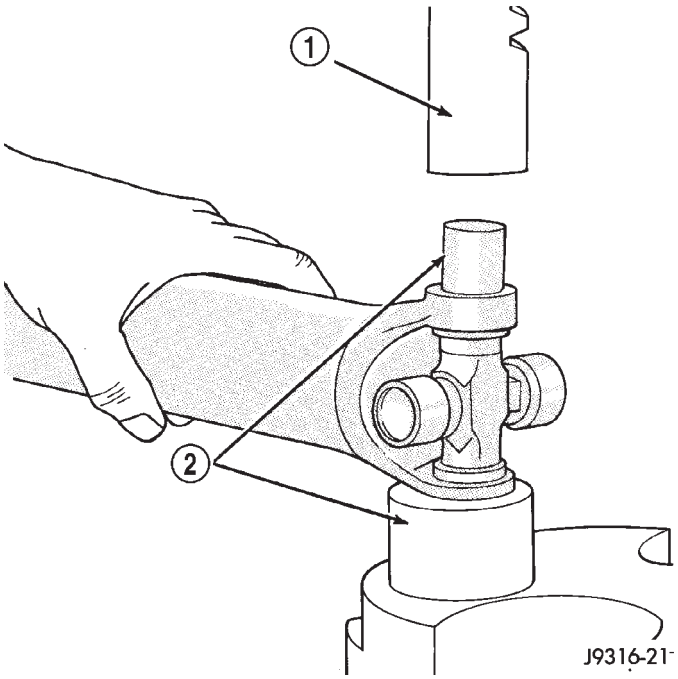

Fig. 14 Press Out Bearing

1 - PRESS
2 - SOCKET

(7) If the bearing cap will not pull out of the yoke by hand after pressing, tap the yoke ear near the bearing cap to dislodge the cap.

(8) To remove the opposite bearing cap, turn the yoke over and straighten the cross in the open hole. Then, carefully press the end of the cross until the remaining bearing cap can be removed (Fig. 15).

CAUTION: If the cross or bearing cap are not straight during installation, the bearing cap will score the walls of the yoke bore and damage can occur.

ASSEMBLY

(1) Apply extreme pressure (EP) N.L.G.I. Grade 1 or 2 grease to inside of yoke bores to aid in installation.

(2) Position the cross in the yoke with its lube fitting, if equipped, pointing up (Fig. 16).

(3) Place a bearing cap over the trunnion and align the cap with the yoke bore (Fig. 17). Keep the needle bearings upright in the bearing assembly. A needle bearing lying at the bottom of the cap will prevent proper assembly.

(4) Press the bearing cap into the yoke bore enough to install a snap ring.

(5) Install a snap ring.

SINGLE CARDAN UNIVERSAL JOINTS (Continued)

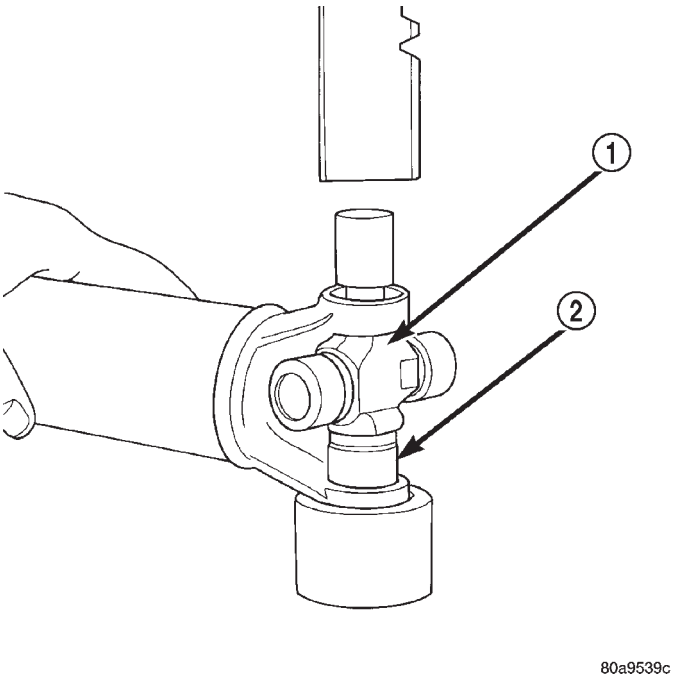

Fig. 15 Press Out Remaining Bearing

1 - CROSS
2 - BEARING CAP

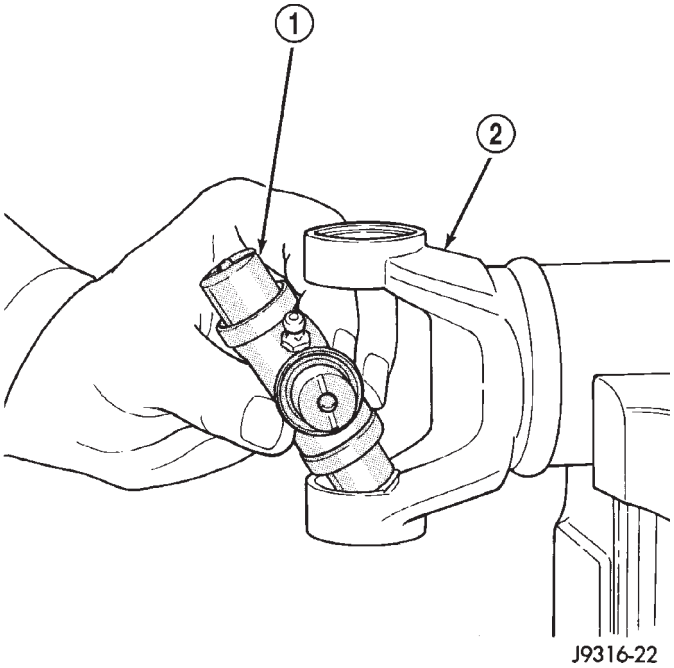

Fig. 16 Cross In Yoke

1 - CROSS
2 - YOKE

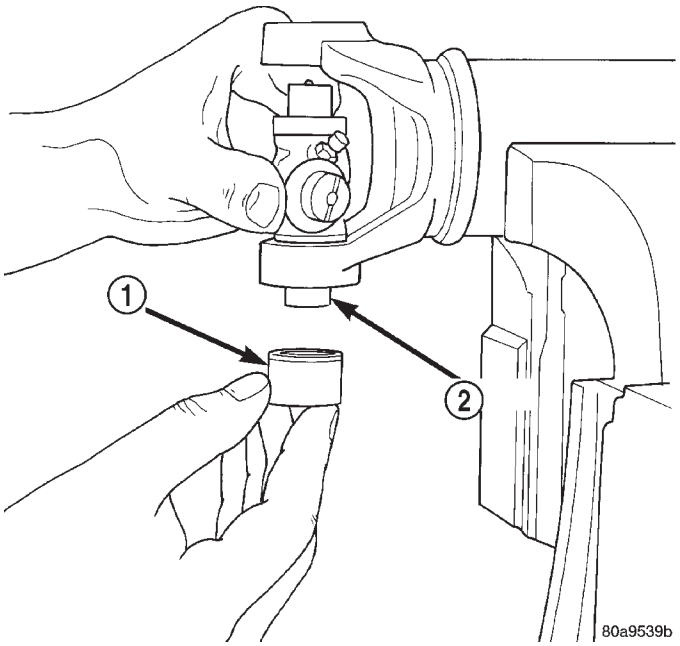

Fig. 17 Install Bearing On Trunnion

1 - BEARING CAP
2 - TRUNNION

(6) Repeat Step 3 and Step 4to install the opposite bearing cap. If the joint is stiff or binding, strike the yoke with a soft hammer to seat the needle bearings.

(7) Add grease to lube fitting, if equipped.

(8) Install the propeller shaft.

DOUBLE CARDAN UNIVERSAL JOINTS

DISASSEMBLY

Individual components of cardan universal joints are not serviceable. If worn or leaking, they must be replaced as an assembly.

(1) Remove the propeller shaft.

(2) Using a soft drift, tap the outside of the bearing cap assembly to loosen snap ring.

(3) Remove all the bearing cap snap rings (Fig. 18).

(4) Set the joint in an arbor press or vise with a socket whose inside diameter is large enough to receive the bearing cap positioned beneath the link yoke.

(5) Place a socket with an outside diameter smaller than the upper bearing cap on the upper bearing cap and partially press one bearing cap from the outboard side of the link yoke enough to grasp the bearing cap with vise jaws (Fig. 19). Be sure to remove grease fittings that interfere with removal.

DOUBLE CARDAN UNIVERSAL JOINTS (Continued)

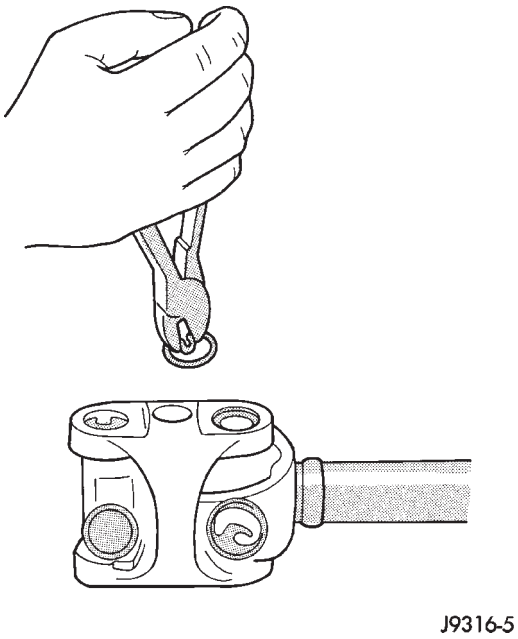

Fig. 18 Remove Snap Rings

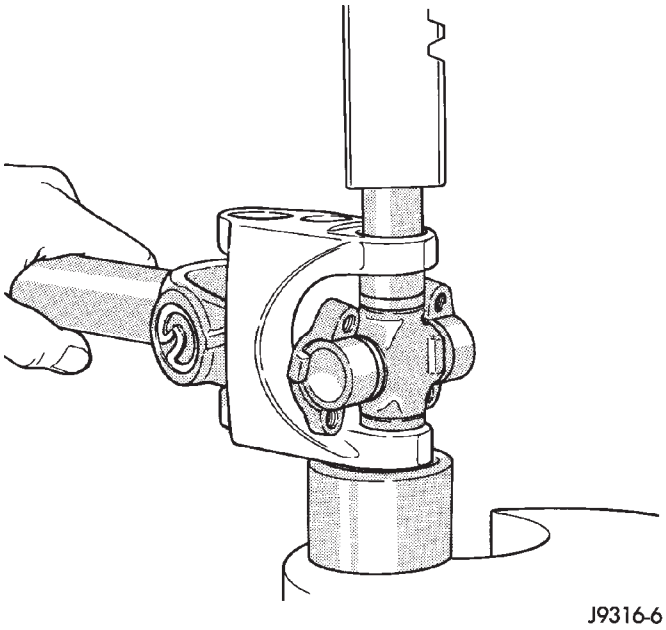

Fig. 19 Press Out Bearing

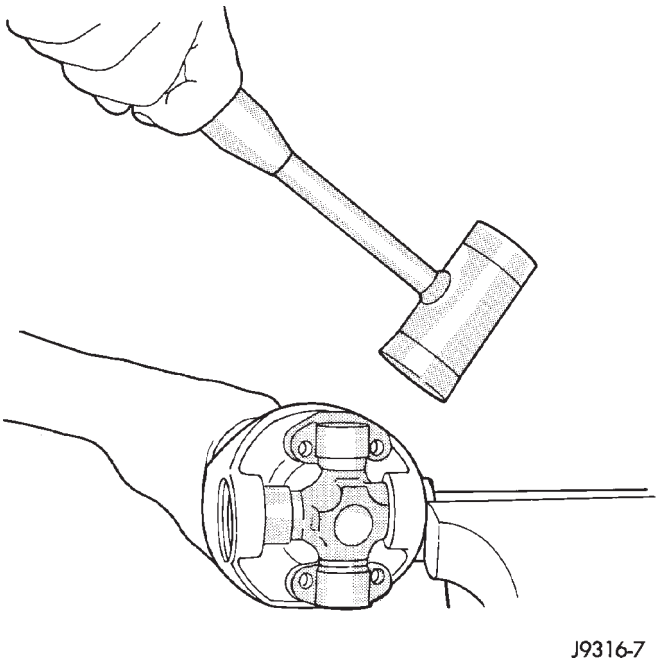

Fig. 20 Remove Bearing From Yoke

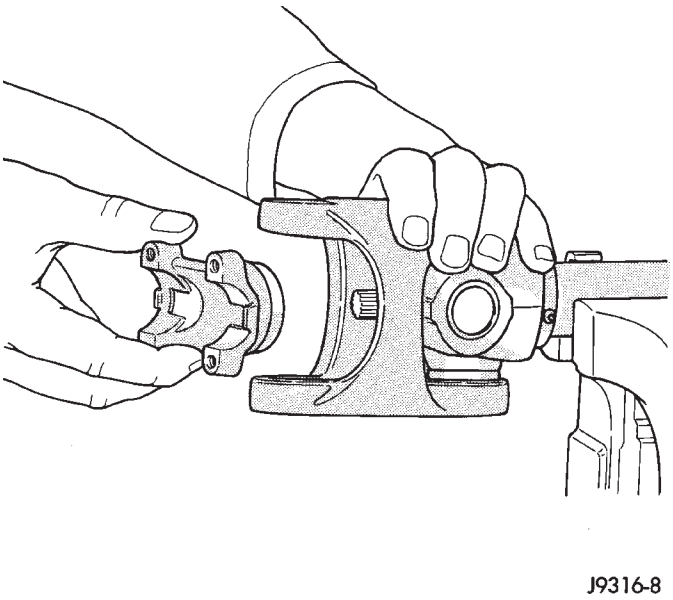

Fig. 21 Remove Centering

(6) Grasp the protruding bearing by vise jaws. Tap the link yoke with a mallet and drift to dislodge the bearing cap from the yoke (Fig. 20).

(7) Flip assembly and repeat Step 4, Step 5, and Step 6 to remove the opposite bearing cap. This will then allow removal of the cross centering kit assembly and spring (Fig. 21).

(8) Press the remaining bearing caps out the other end of the link yoke as described above to complete the disassembly.

ASSEMBLY

During assembly, ensure that the alignment marks on the link yoke and propeller shaft yoke are aligned.

(1) Apply extreme pressure (EP) N.L.G.I. Grade 1 or 2 grease to inside of yoke bores to aid in installation.

(2) Fit a cross into the propeller shaft yoke (Fig. 22).

DOUBLE CARDAN UNIVERSAL JOINTS (Continued)

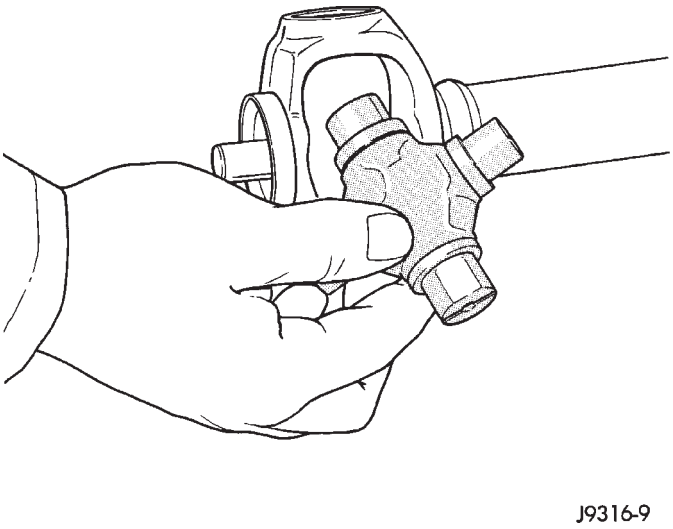

Fig. 22 Install Cross In Yoke

(3) Place a bearing cap over the trunnion and align the cap with the yoke bore (Fig. 23). Keep the needle bearings upright in the bearing assembly. A needle bearing lying at the bottom of the cap will prevent proper assembly.

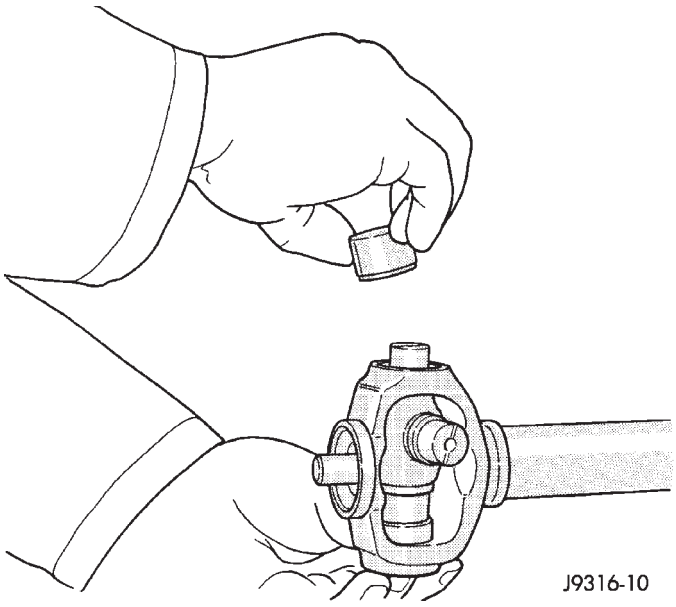

Fig. 23 Install Bearing Cap

(4) Press the bearing cap into the yoke bore enough to install a snap ring (Fig. 24).

(5) Install a snap ring.

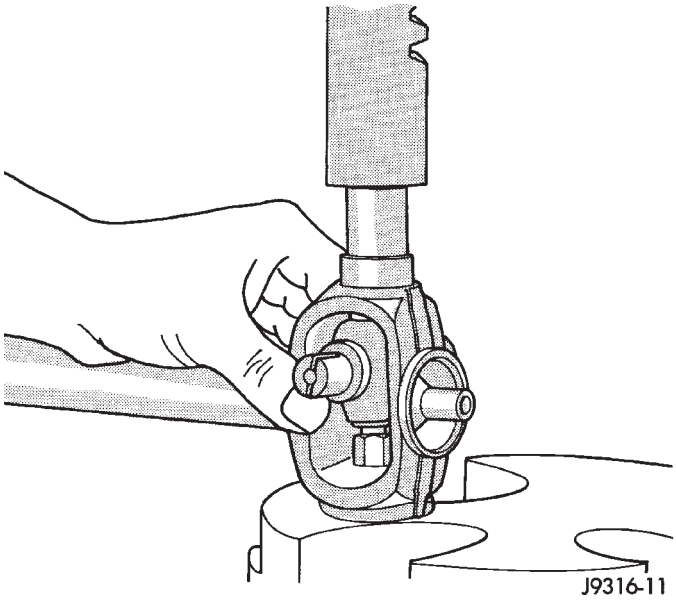

Fig. 24 Press In Bearing Cap

(6) Flip the propeller shaft yoke and install the bearing cap onto the opposite trunnion. Install a snap ring (Fig. 25).

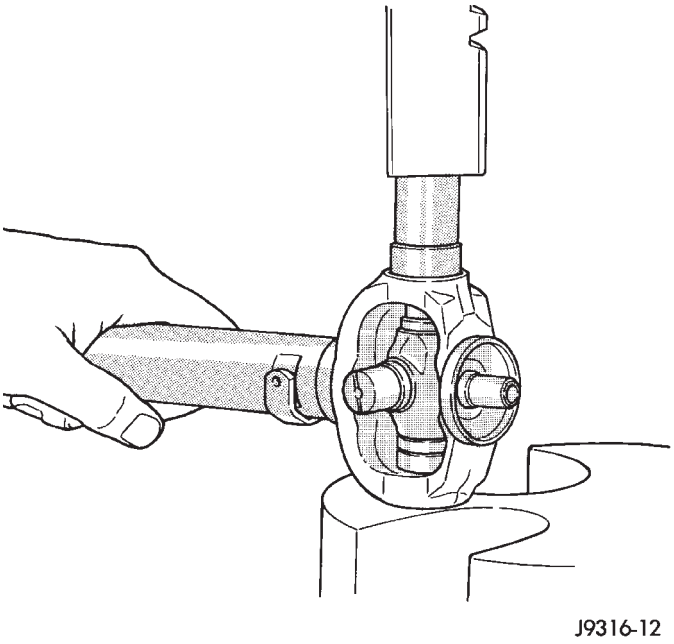

Fig. 25 Press In Bearing Cap

(7) Fit the link yoke on the remaining two trunnions and press both bearing caps into place (Fig. 26).

(8) Install snap rings.

DOUBLE CARDAN UNIVERSAL JOINTS (Continued)

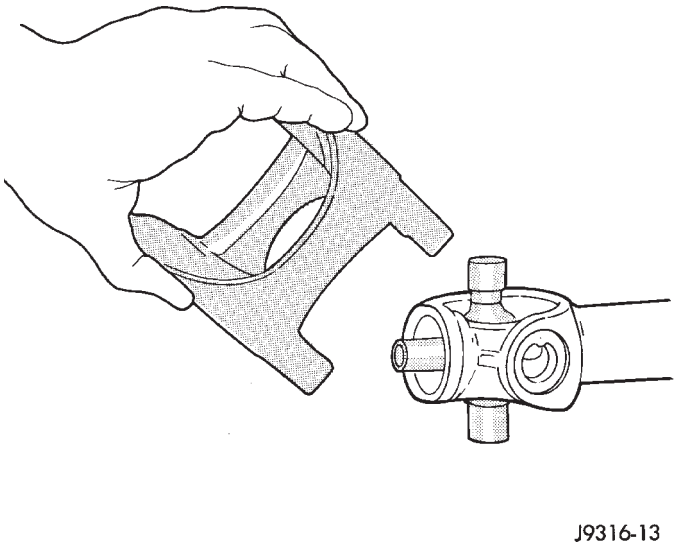

Fig. 26 Install Link Yoke

(9) Install the centering kit assembly inside the link yoke making sure the spring is properly positioned (Fig. 27).

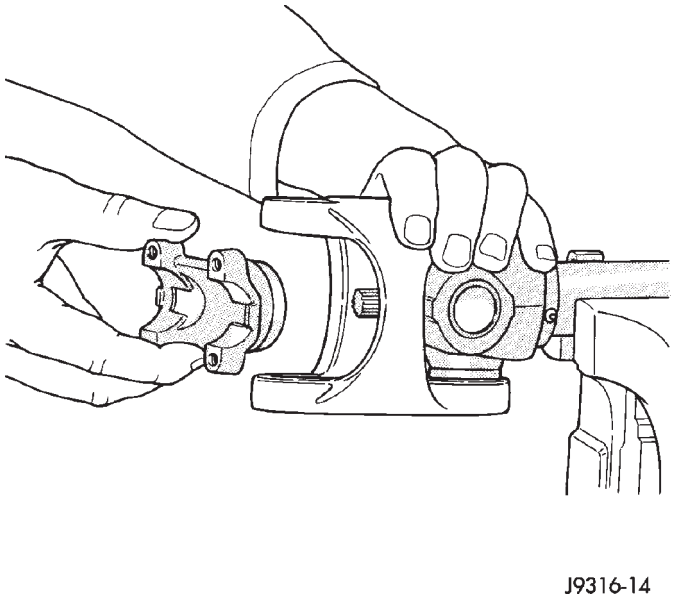

Fig. 27 Install Centering Kit

(10) Place two bearing caps on opposite trunnions of the remaining cross. Fit the open trunnions into the link yoke bores and the bearing caps into the centering kit (Fig. 28).

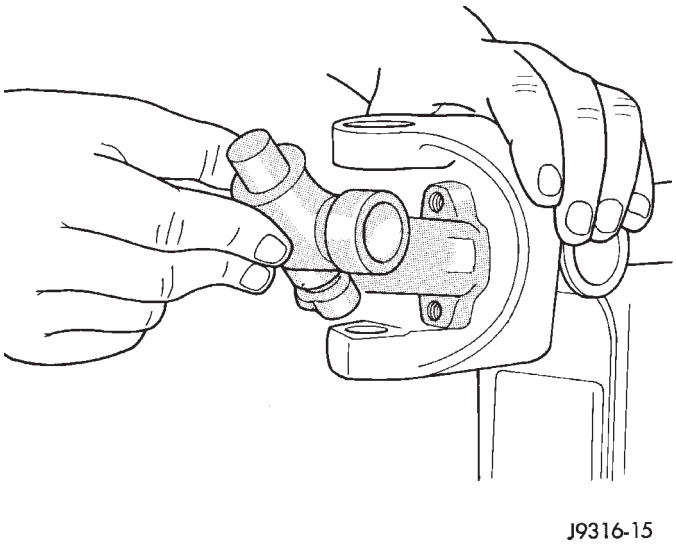

Fig. 28 Install Remaining Cross

(11) Press the remaining two bearing caps into place and install snap rings (Fig. 29).

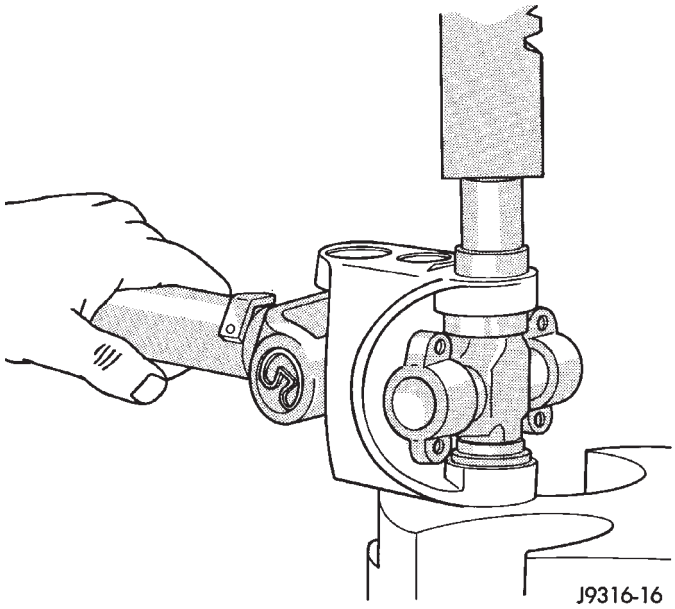

Fig. 29 Press In Bearing Cap

(12) Tap the snap rings to allow them to seat into the grooves (Fig. 30).

DOUBLE CARDAN UNIVERSAL JOINTS (Continued)

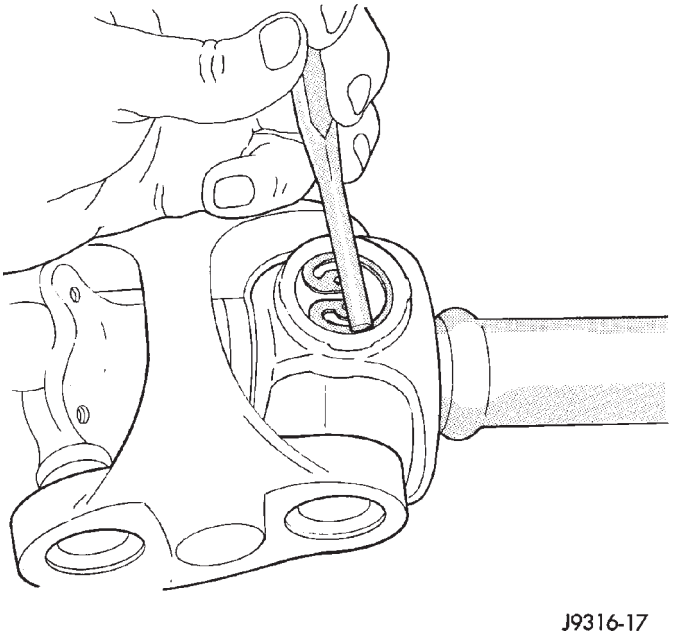

Fig. 30 Seat Snap Rings In Groove

(13) Check for proper assembly. Flex the joint beyond center, it should snap over-center in both directions when correctly assembled (Fig. 31).

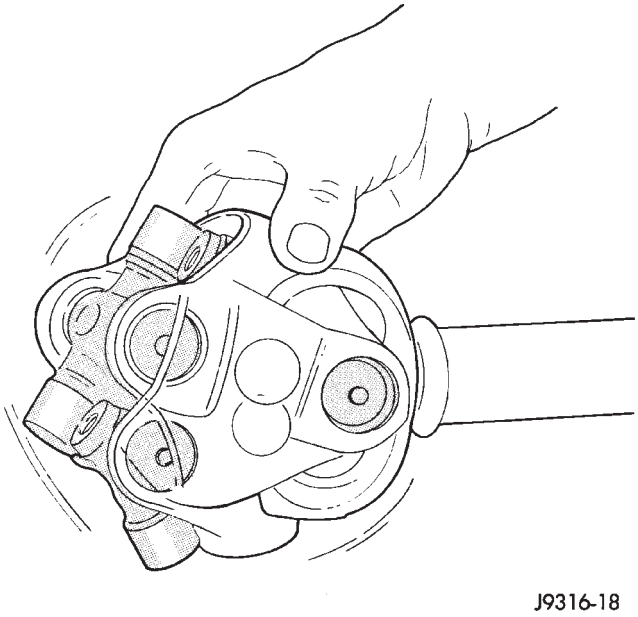

Fig. 31 Check Assembly

(14) Install the propeller shaft.

FRONT TUBE AXLE

TABLE OF CONTENTS

page

FRONT TUBE AXLE
REMOVAL 15
INSTALLATION. 15

FRONT TUBE AXLE

REMOVAL

(1) Raise and support the vehicle.
(2) Position a suitable lifting device under the axle.
(3) Secure axle to device.
(4) Remove the wheels and tires.
(5) Remove the brake rotors (Refer to 5 - BRAKES/HYDRAULIC/MECHANICAL/ROTORS - REMOVAL) and calipers from the axle. (Refer to 5 - BRAKES/HYDRAULIC/MECHANICAL/DISC BRAKE CALIPERS - REMOVAL)
(6) Disconnect the wheel sensor wiring harness from the vehicle wiring harness, if necessary.
(7) Disconnect stabilizer bar links at the axle.
(8) Disconnect shock absorbers from axle brackets.
(9) Disconnect track bar.
(10) Disconnect the tie rod and drag link from the steering knuckle.
(11) Disconnect the steering damper from the axle bracket.
(12) Disconnect the upper and lower suspension arms from the axle brackets.
(13) Lower the lifting device enough to remove the axle. The coil springs will drop with the axle.
(14) Remove the coil springs from the axle.

INSTALLATION

CAUTION: The weight of the vehicle must be supported by the springs before suspension arms and track bar fasteners can be tightened. If the springs are not at their normal ride position, ride height and handling could be affected.

(1) Install the springs and retainer clips. Tighten the retainer bolts to 21 N·m (16 ft. lbs.) torque.
(2) Support the axle on a suitable lifting device and position axle under the vehicle.
(3) Raise the axle and align it with the spring pads.
(4) Position the upper and lower suspension arms in the axle brackets. Loosely install bolts and nuts to hold suspension arms to the axle brackets.
(5) Connect the track bar to the axle bracket. Loosely install the bolt to hold the track bar to the axle bracket.
(6) Install the shock absorbers and tighten the bolts to 23 N·m (17 ft. lbs.) torque.
(7) Install the stabilizer bar links to the axle brackets. Tighten the nut to 95 N·m (70 ft. lbs.) torque.
(8) Install the drag link and tie rod to the steering knuckles.
(9) Install the steering damper to the axle bracket and tighten the nut to 75 N·m (55 ft. lbs.) torque.
(10) Install the brake rotors (Refer to 5 - BRAKES/HYDRAULIC/MECHANICAL/ROTORS - REMOVAL) and calipers. (Refer to 5 - BRAKES/HYDRAULIC/MECHANICAL/DISC BRAKE CALIPERS - REMOVAL)
(11) Connect the wheel speed sensor wiring harness to the vehicle wiring harness, if necessary.
(12) Install the wheel and tire assemblies.
(13) Remove the lifting device from the axle and lower the vehicle.
(14) Tighten the upper suspension arm nuts to 75 N·m (55 ft. lbs.) torque. Tighten the lower suspension arm nuts to 115 N·m (85 ft. lbs.) torque.
(15) Tighten the track bar bolt at the axle bracket to 100 N·m (74 ft. lbs.) torque.
(16) Check the front wheel alignment.

FRONT AXLE - 186FBI

TABLE OF CONTENTS

page

FRONT AXLE - 186FBI
DESCRIPTION 16
OPERATION. 16
DIAGNOSIS AND TESTING 17
FRONT AXLE - 186FBI 17
REMOVAL 21
INSTALLATION. 21
ADJUSTMENTS 22
SPECIFICATIONS 30
SPECIAL TOOLS 30
AXLE SHAFTS
REMOVAL 33
INSTALLATION. 33
AXLE SHAFT SEALS
REMOVAL 34
INSTALLATION. 34
AXLE - C/V JOINT
REMOVAL 34
INSTALLATION. 34
AXLE - U-JOINT
REMOVAL 35
INSTALLATION. 36
PINION SEAL
REMOVAL 36
INSTALLATION. 36
COLLAPSIBLE SPACER
REMOVAL 37
INSTALLATION. 38
DIFFERENTIAL
REMOVAL 39
DISASSEMBLY. 40
ASSEMBLY 41
INSTALLATION. 41
DIFFERENTIAL CASE BEARINGS
REMOVAL 42
INSTALLATION. 43
PINION GEAR/RING GEAR
REMOVAL 44
INSTALLATION. 45

FRONT AXLE - 186FBI

DESCRIPTION

The 186 Front Beam-design Iron (FBI) axle consists of a cast iron differential housing with axle shaft tubes extending from either side. The tubes are pressed into the differential housing and welded.

The integral type housing, hypoid gear design has the centerline of the pinion set below the centerline of the ring gear.

The axle has a fitting for a vent hose used to relieve internal pressure caused by lubricant vaporization and internal expansion.

The axles are equipped with semi–floating axle shafts, meaning that loads are supported by the hub bearings. The axle shafts are retained by nuts at the hub bearings. The hub bearings are bolted to the steering knuckle at the outboard end of the axle tube yoke. The hub bearings are serviced as an assembly.

For vehicles with ABS brakes, the ABS wheel speed sensors are attached to the knuckle assemblies. The tone rings for the ABS system are pressed onto the axle shaft. **Do not damage ABS tone wheel or the sensor when removing axle shafts.**

The stamped steel cover provides a means for inspection and servicing the differential.

The 186 FBI axle has the assembly part number and gear ratio listed on a tag. The tag is attached to the housing cover by a cover bolt. Build date identification codes are stamped on the cover side of the axle shaft tube.

The differential case is a one–piece design. The differential pinion mate shaft is retained with a roll pin. Differential bearing preload and ring gear backlash is adjusted by the use of shims (select thickness). The shims are located between the differential bearing cups and axle housing. Pinion bearing preload is set and maintained by the use of a collapsible spacer.

Axles equipped with a Vari-Lok™ differential are optional. A Vari-Lok™ differential has a one-piece differential case which contains the gerotor pump assembly and the clutch mechinism. The Vari-Lok™ unit is serviced only as an assembly.

OPERATION

The axle receives power from the transfer case through the front propeller shaft. The front propeller shaft is connected to the pinion gear which rotates the differential through the gear mesh with the ring gear bolted to the differential case. The engine power is transmitted to the axle shafts through the pinion

FRONT AXLE - 186FBI (Continued)

mate and side gears. The side gears are splined to the axle shafts.

STANDARD DIFFERENTIAL

During straight-ahead driving, the differential pinion gears do not rotate on the pinion mate shaft. This occurs because input torque applied to the gears is divided and distributed equally between the two side gears. As a result, the pinion gears revolve with the pinion mate shaft but do not rotate around it (Fig. 1).

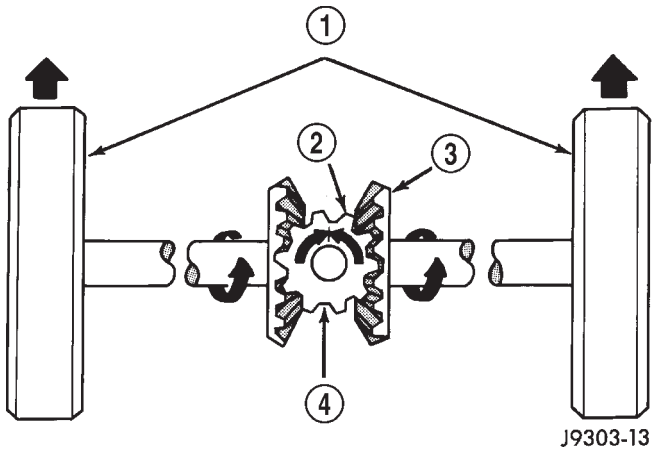

Fig. 1 Differential Operation-Straight Ahead Driving

1 - IN STRAIGHT AHEAD DRIVING EACH WHEEL ROTATES AT 100% OF CASE SPEED
2 - PINION GEAR
3 - SIDE GEAR
4 - PINION GEARS ROTATE WITH CASE

When turning corners, the outside wheel must travel a greater distance than the inside wheel to complete a turn. The difference must be compensated for to prevent the tires from scuffing and skidding through turns. To accomplish this, the differential allows the axle shafts to turn at unequal speeds (Fig. 2). In this instance, the input torque applied to the pinion gears is not divided equally. The pinion gears now rotate around the pinion mate shaft in opposite directions. This allows the side gear and axle shaft attached to the outside wheel to rotate at a faster speed.

VARI-LOK™ DIFFERENTIAL

In a standard differential if one wheel spins, the opposite wheel will generate only as much torque as the spinning wheel.

A gerotor pump and clutch pack are used to provide the torque transfer capability. One axle shaft is splined to the gerotor pump and one of the differential side gears, which provides the input to the pump. As a wheel begins to lose traction, the speed differential is transmitted from one side of the differential to the other through the side gears. The motion of

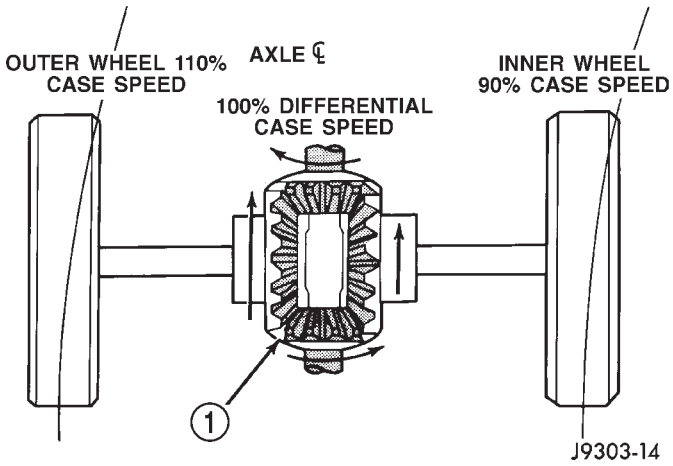

Fig. 2 Differential Operation-On Turns

1 - PINION GEARS ROTATE ON PINION SHAFT

one side gear relative to the other turns the inner rotor of the pump. Since the outer rotor of the pump is grounded to the differential case, the inner and outer rotors are now moving relative to each other and therefore creates pressure in the pump. The tuning of the front and rear axle orifices and valves inside the gerotor pump is unique and each system includes a torque-limiting pressure relief valve to protect the clutch pack, which also facilitates vehicle control under extreme side-to-side traction variations. The resulting pressure is applied to the clutch pack and the transfer of torque is completed.

Under conditions in which opposite wheels are on surfaces with widely different friction characteristics, Vari-lok™ delivers far more torque to the wheel on the higher traction surface than do conventional Trac-lok™ systems. Because conventional Trac-lok™ differentials are initially pre-loaded to assure torque transfer, normal driving (where inner and outer wheel speeds differ during cornering, etc.) produces torque transfer during even slight side-to-side speed variations. Since these devices rely on friction from this preload to transfer torque, normal use tends to cause wear that reduces the ability of the differential to transfer torque over time. By design, the Vari-lok™ system is less subject to wear, remaining more consistent over time in its ability to transfer torque. The coupling assembly is serviced as a unit. From a service standpoint the coupling also benefits from using the same lubricant supply as the ring and pinion gears.

DIAGNOSIS AND TESTING - AXLE

GEAR NOISE

Axle gear noise can be caused by insufficient lubricant, incorrect backlash, tooth contact, worn/damaged

FRONT AXLE - 186FBI (Continued)

gears, or the carrier housing not having the proper offset and squareness.

Gear noise usually happens at a specific speed range. The noise can also occur during a specific type of driving condition. These conditions are acceleration, deceleration, coast, or constant load.

When road testing, first warm-up the axle fluid by driving the vehicle at least 5 miles and then accelerate the vehicle to the speed range where the noise is the greatest. Shift out-of-gear and coast through the peak–noise range. If the noise stops or changes greatly:

- Check for insufficient lubricant.
- Incorrect ring gear backlash.
- Gear damage.

Differential side gears and pinions can be checked by turning the vehicle. They usually do not cause noise during straight-ahead driving when the gears are unloaded. The side gears are loaded during vehicle turns. A worn pinion mate shaft can also cause a snapping or a knocking noise.

BEARING NOISE

The axle shaft, differential and pinion bearings can all produce noise when worn or damaged. Bearing noise can be either a whining, or a growling sound.

Pinion bearings have a constant–pitch noise. This noise changes only with vehicle speed. Pinion bearing noise will be higher pitched because it rotates at a faster rate. Drive the vehicle and load the differential. If bearing noise occurs, the rear pinion bearing is the source of the noise. If the bearing noise is heard during a coast, the front pinion bearing is the source.

Worn or damaged differential bearings usually produce a low pitch noise. Differential bearing noise is similar to pinion bearing noise. The pitch of differential bearing noise is also constant and varies only with vehicle speed.

Axle shaft bearings produce noise and vibration when worn or damaged. The noise generally changes when the bearings are loaded. Road test the vehicle. Turn the vehicle sharply to the left and to the right. This will load the bearings and change the noise level. Where axle bearing damage is slight, the noise is usually not noticeable at speeds above 30 mph.

LOW SPEED KNOCK

Low speed knock is generally caused by a worn U–joint or by worn side–gear thrust washers. A worn pinion shaft bore will also cause low speed knock.

VIBRATION

Vibration at the rear of the vehicle is usually caused by a:

- Damaged drive shaft.
- Missing drive shaft balance weight(s).
- Worn or out–of–balance wheels.
- Loose wheel lug nuts.
- Worn U–joint(s).
- Loose/broken springs.
- Damaged axle shaft bearing(s).
- Loose pinion gear nut.
- Excessive pinion yoke run out.
- Bent axle shaft(s).

Check for loose or damaged front–end components or engine/transmission mounts. These components can contribute to what appears to be a rear-end vibration. Do not overlook engine accessories, brackets and drive belts.

All driveline components should be examined before starting any repair.

(Refer to 22 - TIRES/WHEELS - DIAGNOSIS AND TESTING)

DRIVELINE SNAP

A snap or clunk noise when the vehicle is shifted into gear (or the clutch engaged), can be caused by:

- High engine idle speed.
- Transmission shift operation.
- Loose engine/transmission/transfer case mounts.
- Worn U-joints.
- Loose spring mounts.
- Loose pinion gear nut and yoke.
- Excessive ring gear backlash.
- Excessive side gear to case clearance.

The source of a snap or a clunk noise can be determined with the assistance of a helper. Raise the vehicle on a hoist with the wheels free to rotate. Instruct the helper to shift the transmission into gear. Listen for the noise, a mechanics stethoscope is helpful in isolating the source of a noise.

DIAGNOSTIC CHART

Condition	Possible Causes	Correction
Wheel Noise	1. Wheel loose. 2. Faulty, brinelled wheel bearing.	1. Tighten loose nuts. 2. Replace bearing.

FRONT AXLE - 186FBI (Continued)

Condition	Possible Causes	Correction
Axle Shaft Noise	1. Misaligned axle tube.	1. Inspect axle tube alignment. Correct as necessary.
	2. Bent or sprung axle shaft.	2. Inspect and correct as necessary.
	3. End-play in pinion bearings.	3. Refer to pinion pre-load information and correct as necessary.
	4. Excessive gear backlash between the ring gear and pinion.	4. Check adjustment of the ring gear and pinion backlash. Correct as necessary.
	5. Improper adjustment of pinion gear bearings.	5. Adjust the pinion bearings pre-load.
	6. Loose pinion yoke nut.	6. Tighten the pinion yoke nut.
	7. Scuffed gear tooth contact surfaces.	7. Inspect and replace as necessary.
Axle Shaft Broke	1. Misaligned axle tube.	1. Replace the broken shaft after correcting tube mis-alignment.
	2 Vehicle overloaded.	2. Replace broken shaft and avoid excessive weight on vehicle.
	3. Erratic clutch operation.	3. Replace broken shaft and avoid or correct erratic clutch operation.
	4. Grabbing clutch.	4. Replace broken shaft and inspect and repair clutch as necessary.
Differential Cracked	1. Improper adjustment of the differential bearings.	1. Replace case and inspect gears and bearings for further damage. Set differential bearing pre-load properly.
	2. Excessive ring gear backlash.	2. Replace case and inspect gears and bearings for further damage. Set ring gear backlash properly.
	3. Vehicle overloaded.	3. Replace case and inspect gears and bearings for further damage. Avoid excessive vehicle weight.
	4. Erratic clutch operation.	4. Replace case and inspect gears and bearings for further damage. Avoid erratic use of clutch.
Differential Gears Scored	1. Insufficient lubrication.	1. Replace scored gears. Fill differential with the correct fluid type and quantity.
	2. Improper grade of lubricant.	2. Replace scored gears. Fill differential with the correct fluid type and quantity.
	3. Excessive spinning of one wheel/tire.	3. Replace scored gears. Inspect all gears, pinion bores, and shaft for damage. Service as necessary.

FRONT AXLE - 186FBI (Continued)

Condition	Possible Causes	Correction
Loss Of Lubricant	1. Lubricant level too high.	1. Drain lubricant to the correct level.
	2. Worn axle shaft seals.	2. Replace seals.
	3. Cracked differential housing.	3. Repair as necessary.
	4. Worn pinion seal.	4. Replace seal.
	5. Worn/scored yoke.	5. Replace yoke and seal.
	6. Axle cover not properly sealed.	6. Remove, clean, and re-seal cover.
Axle Overheating	1. Lubricant level low.	1. Fill differential to correct level.
	2. Improper grade of lubricant.	2. Fill differential with the correct fluid type and quantity.
	3. Bearing pre-loads too high.	3. Re-adjust bearing pre-loads.
	4. Insufficient ring gear backlash.	4. Re-adjust ring gear backlash.
Gear Teeth Broke	1. Overloading.	1. Replace gears. Examine other gears and bearings for possible damage.
	2. Erratic clutch operation.	2. Replace gears and examine the remaining parts for damage. Avoid erratic clutch operation.
	3. Ice-spotted pavement.	3. Replace gears and examine remaining parts for damage.
	4. Improper adjustments.	4. Replace gears and examine remaining parts for damage. Ensure ring gear backlash is correct.
Axle Noise	1. Insufficient lubricant.	1. Fill differential with the correct fluid type and quantity.
	2. Improper ring gear and pinion adjustment.	2. Check ring gear and pinion contact pattern.
	3. Unmatched ring gear and pinion.	3. Replace gears with a matched ring gear and pinion.
	4. Worn teeth on ring gear and/or pinion.	4. Replace ring gear and pinion.
	5. Loose pinion bearings.	5. Adjust pinion bearing pre-load.
	6. Loose differential bearings.	6. Adjust differential bearing pre-load.
	7. Mis-aligned or sprung ring gear.	7. Measure ring gear run-out. Replace components as necessary.
	8. Loose differential bearing cap bolts.	8. Inspect differential components and replace as necessary. Ensure that the bearing caps are torqued tot he proper specification.
	9. Housing not machined properly.	9. Replace housing.

FRONT AXLE - 186FBI (Continued)

VARI-LOK™

(1) Park the vehicle on a level surface or raise vehicle on hoist so that the vehicle is level.

(2) Remove the axle fill plug.

(3) Verify that the axle fluid level is correct. The fluid level is correct if the fluid is level with the bottom of the fill hole.

(4) Shift the transfer case into the 4WD full-time position.

(5) Drive the vehicle in a tight circle for 2 minutes at 5mph to fully prime the pump.

(6) Block the tires opposite the axle to be tested to prevent the vehicle from moving.

(7) Shift the transfer case into the 4WD Low position and the transmission into the Park position.

(8) Raise both the wheels of the axle to be tested off of the ground.

(9) Rotate the left wheel by hand at a minimum of one revolution per second while an assistant rotates the right wheel in the opposite direction.

(10) The left wheel should spin freely at first and then increase in resistance within 5 revolutions until the wheels cannot be continuously rotated in opposite directions.

(11) The Vari-lok™ differential has engaged properly if the wheels cannot be rotated in opposite directions for a moment. After the wheels stop rotating for a moment, the fluid pressure will drop in the differential and the wheels begin to rotate once again.

(12) If the system does not operate properly, replace the Vari-lok™ differential.

REMOVAL

(1) Raise and support the vehicle.

(2) Position a suitable lifting device under the axle.

(3) Secure axle to device.

(4) Remove the wheels and tires.

(5) Remove the brake rotors (Refer to 5 - BRAKES/HYDRAULIC/MECHANICAL/ROTORS - REMOVAL) and calipers (Refer to 5 - BRAKES/HYDRAULIC/MECHANICAL/DISC BRAKE CALIPERS - REMOVAL) from the axle.

(6) Disconnect the wheel sensor wiring harness from the vehicle wiring harness, if necessary.

(7) Disconnect the vent hose from the axle shaft tube.

(8) Mark the propeller shaft and yoke, or pinion flange, for installation alignment reference.

(9) Remove propeller shaft.

(10) Disconnect stabilizer bar links at the axle.

(11) Disconnect shock absorbers from axle brackets.

(12) Disconnect track bar.

(13) Disconnect the tie rod and drag link from the steering knuckle.

(14) Disconnect the steering damper from the axle bracket.

(15) Disconnect the upper and lower suspension arms from the axle brackets.

(16) Lower the lifting device enough to remove the axle. The coil springs will drop with the axle.

(17) Remove the coil springs from the axle.

INSTALLATION

CAUTION: The weight of the vehicle must be supported by the springs before suspension arms and track bar fasteners can be tightened. If the springs are not at their normal ride position, ride height and handling could be affected.

(1) Install the springs and retainer clips. Tighten the retainer bolts to 21 N·m (16 ft. lbs.) torque.

(2) Support the axle on a suitable lifting device and position axle under the vehicle.

(3) Raise the axle and align it with the spring pads.

(4) Position the upper and lower suspension arms in the axle brackets. Loosely install bolts and nuts to hold suspension arms to the axle brackets.

(5) Connect the vent hose to the axle shaft tube.

(6) Connect the track bar to the axle bracket. Loosely install the bolt to hold the track bar to the axle bracket.

(7) Install the shock absorbers and tighten the bolts to 23 N·m (17 ft. lbs.) torque.

(8) Install the stabilizer bar links to the axle brackets. Tighten the nut to 95 N·m (70 ft. lbs.) torque.

(9) Install the drag link and tie rod to the steering knuckles.

(10) Install the steering damper to the axle bracket and tighten the nut to 75 N·m (55 ft. lbs.) torque.

(11) Install the brake rotors (Refer to 5 - BRAKES/HYDRAULIC/MECHANICAL/ROTORS - INSTALLATION) and calipers. (Refer to 5 - BRAKES/HYDRAULIC/MECHANICAL/DISC BRAKE CALIPERS - INSTALLATION)

(12) Connect the wheel speed sensor wiring harness to the vehicle wiring harness, if necessary.

(13) Align the previously made marks on the propeller shaft and the yoke, or pinion flange.

(14) Install the bolts to hold the propeller shaft to the pinion flange, if equipped.

(15) Install the straps and bolts to hold the propeller shaft to the yoke, if equipped.

(16) Check and fill axle lubricant. Refer to the Lubricant Specifications in this group for the quantity necessary.

(17) Install the wheel and tire assemblies.

FRONT AXLE - 186FBI (Continued)

(18) Remove the lifting device from the axle and lower the vehicle.

(19) Tighten the upper suspension arm nuts to 75 N·m (55 ft. lbs.) torque. Tighten the lower suspension arm nuts to 115 N·m (85 ft. lbs.) torque.

(20) Tighten the track bar bolt at the axle bracket to 100 N·m (74 ft. lbs.) torque.

(21) Check the front wheel alignment.

ADJUSTMENTS

Ring and pinion gears are supplied as matched sets only. The identifying numbers for the ring and pinion gear are etched into the face of each gear (Fig. 3). A plus (+) number, minus (–) number or zero (0) is etched into the face of the pinion gear. This number is the amount (in thousandths of an inch) the depth varies from the standard depth setting of a pinion etched with a (0). The standard setting from the center line of the ring gear to the back face of the pinion is 92.1 mm (3.625 in.). The standard depth provides the best gear tooth contact pattern. Refer to Backlash and Contact Pattern Analysis paragraph in this section for additional information.

Compensation for pinion depth variance is achieved with a select shim/oil baffle. The shims are placed between the rear pinion bearing and the pinion gear head (Fig. 4).

If a new gear set is being installed, note the depth variance etched into both the original and replacement pinion. Add or subtract this number from the thickness of the original depth shim/oil slinger to compensate for the difference in the depth variances. Refer to the Pinion Gear Depth Variance chart.

Note where Old and New Pinion Marking columns intersect. Intersecting figure represents plus or minus the amount needed.

Note the etched number on the face of the pinion gear head (–1, –2, 0, +1, +2, etc.). The numbers represent thousands of an inch deviation from the standard. If the number is negative, add that value to the required thickness of the depth shims. If the number is positive, subtract that value from the thickness of the depth shim. If the number is 0 no change is necessary.

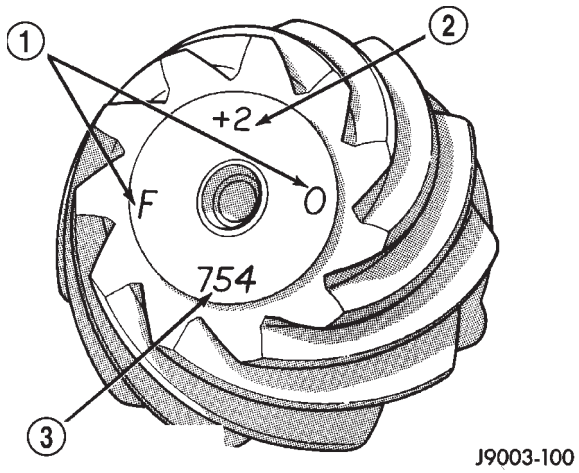

Fig. 3 Pinion Gear ID Numbers

1 - PRODUCTION NUMBERS
2 - PINION GEAR DEPTH VARIANCE
3 - GEAR MATCHING NUMBER

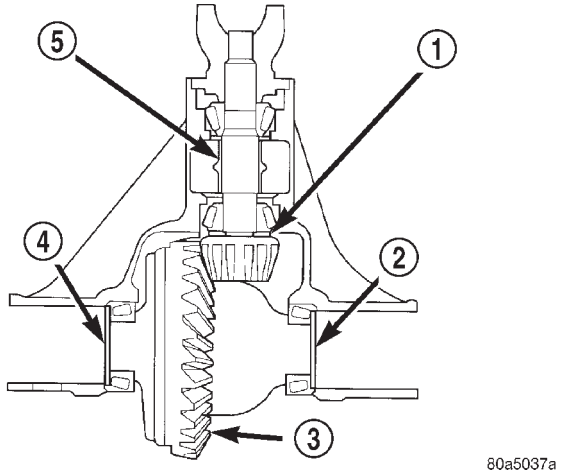

Fig. 4 Adjustment Shims Locations

1 - PINION GEAR DEPTH SHIM/OIL BAFFLE
2 - DIFFERENTIAL BEARING SHIM
3 - RING GEAR
4 - DIFFERENTIAL BEARING SHIM
5 - COLLAPSIBLE SPACER

PINION GEAR DEPTH VARIANCE

Original Pinion Gear Depth Variance	Replacement Pinion Gear Depth Variance									
	−4	−3	−2	−1	0	+1	+2	+3	+4	
+4		+0.008	+0.007	+0.006	+0.005	+0.004	+0.003	+0.002	+0.001	0
+3		+0.007	+0.006	+0.005	+0.004	+0.003	+0.002	+0.001	0	−0.001
+2		+0.006	+0.005	+0.004	+0.003	+0.002	+0.001	0	−0.001	−0.002
+1		+0.005	+0.004	+0.003	+0.002	+0.001	0	−0.001	−0.002	−0.003

FRONT AXLE - 186FBI (Continued)

Original Pinion Gear Depth Variance	Replacement Pinion Gear Depth Variance									
	−4	−3	−2	−1	0	+1	+2	+3	+4	
0		+0.004	+0.003	+0.002	+0.001	0	−0.001	−0.002	−0.003	−0.004
−1		+0.003	+0.002	+0.001	0	−0.001	−0.002	−0.003	−0.004	−0.005
−2		+0.002	+0.001	0	−0.001	−0.002	−0.003	−0.004	−0.005	−0.006
−3		+0.001	0	−0.001	−0.002	−0.003	−0.004	−0.005	−0.006	−0.007
−4		0	−0.001	−0.002	−0.003	−0.004	−0.005	−0.006	−0.007	−0.008

PINION DEPTH MEASUREMENT

Measurements are taken with pinion bearing cups and pinion bearings installed in the housing. Take measurements with Pinion Gauge Set and Dial Indicator C-3339 (Fig. 5).

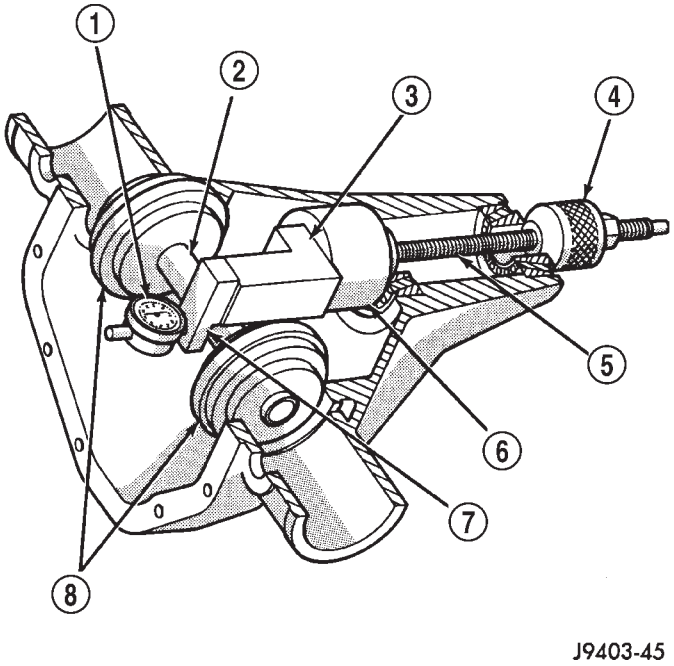

Fig. 5 Pinion Gear Depth Tools

1 - DIAL INDICATOR - C-3339
2 - ARBOR - D-115-3
3 - PINION HEIGHT BLOCK - 6739
4 - CONE - 6740
5 - SCREW -6741
6 - PINION BLOCK -6733
7 - SCOOTER BLOCK - D-115-2
8 - ARBOR DISC v- 6732

(1) Assemble Pinion Height Block 6739, Pinion Block 6733 and rear pinion bearing onto Screw 6741 (Fig. 5).

(2) Insert assembled height gauge components, rear bearing and screw into the housing through pinion bearing cups (Fig. 6).

(3) Install front pinion bearing and Cone-nut 6740 hand tight (Fig. 5).

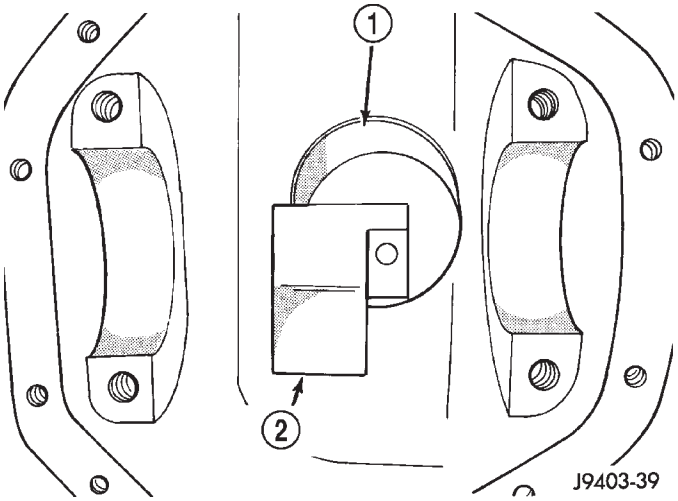

Fig. 6 Pinion Height Block

1 - PINION BLOCK - 6733
2 - PINION HEIGHT BLOCK - 6739

(4) Place Arbor Disc 6732 on Arbor D-115-3 in position, in the housing side bearing cradles (Fig. 7). Install differential bearing caps on Arbor Discs and tighten cap bolts to 41 N·m (30 ft. lbs.).

NOTE: Arbor Discs 6732 has different step diameters to fit other axles. Choose proper step for axle being serviced.

(5) Assemble Dial Indicator C-3339 into Scooter Block D-115-2 and secure set screw.

(6) Place Scooter Block/Dial Indicator in position in axle housing so dial probe and scooter block are flush against the rearward surface of the pinion height block (Fig. 5). Hold scooter block in place and zero the dial indicator face to the pointer. Tighten dial indicator face lock screw.

(7) With scooter block still in position against the pinion height block, slowly slide the dial indicator probe over the edge of the pinion height block.

(8) Slide the dial indicator probe across the gap between the pinion height block and the arbor bar with the scooter block against the pinion height block (Fig. 8). When the dial probe contacts the arbor bar,

FRONT AXLE - 186FBI (Continued)

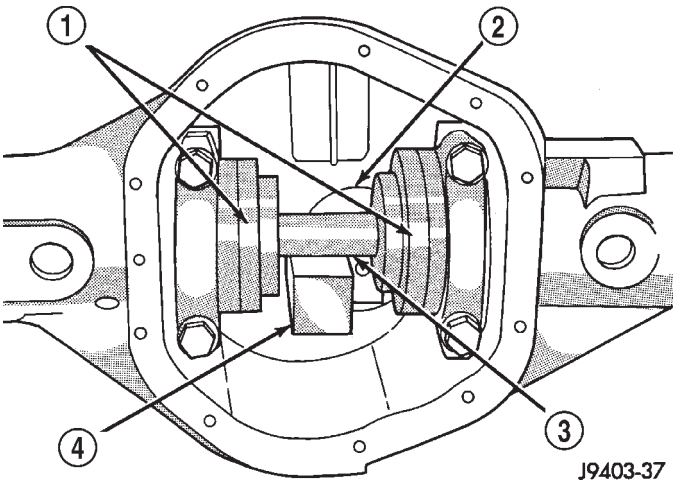

Fig. 7 Tools In Housing

1 - ARBOR DISC - 6732
2 - PINION BLOCK - 6733
3 - ARBOR - D-115-3
4 - PINION HEIGHT BLOCK - 6739

the dial pointer will turn clockwise. Continue moving the dial probe to the crest of the arbor bar and record the highest reading. If the dial indicator can not achieve the zero reading, the rear bearing cup or the pinion depth gauge set is not installed correctly.

(9) Select a shim/oil baffle equal to the dial indicator reading plus the pinion depth variance number etched in the face of the pinion (Fig. 3). For example, if the depth variance is –2, add +0.002 in. to the dial indicator reading.

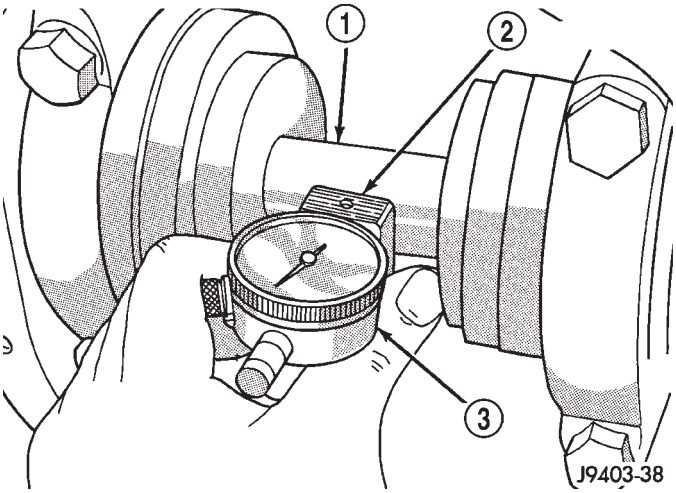

Fig. 8 Pinion Gear Depth Measurement

1 - ARBOR - D-115-3
2 - SCOOTER BLOCK - D-115-2
3 - DIAL INDICATOR - C-3339

DIFFERENTIAL

Differential side bearing preload and gear backlash is achieved by selective shims positioned behind the differential side bearing cones. The proper shim thickness can be determined using slip-fit Dummy Bearings D-348 in place of the differential side bearings and a Dial Indicator C-3339. Before proceeding with the differential bearing preload and gear backlash measurements, measure the pinion gear depth and prepare the pinion for installation. Establishing proper pinion gear depth is essential to establishing gear backlash and tooth contact patterns. After the overall shim thickness to take up differential side play is measured, the pinion is installed, and the gear backlash shim thickness is measured. The overall shim thickness is the total of the dial indicator reading and the preload specification added together. The gear backlash measurement determines the thickness of the shim used on the ring gear side of the differential case. Subtract the gear backlash shim thickness from the total overall shim thickness and select that amount for the pinion gear side of the differential (Fig. 9). Differential shim measurements are performed with spreader W-129-B removed.

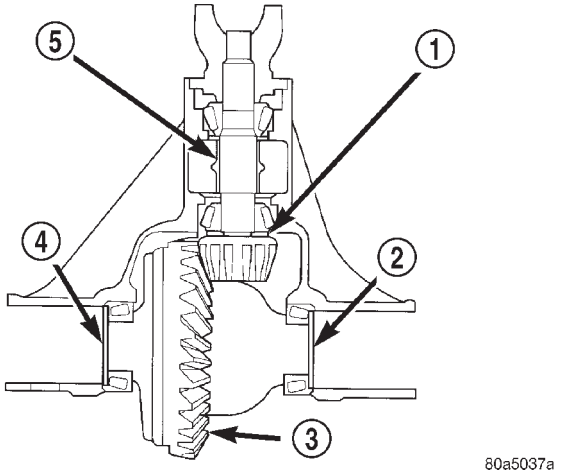

Fig. 9 Adjustment Shims Locations

1 - PINION GEAR DEPTH SHIM/OIL BAFFLE
2 - DIFFERENTIAL BEARING SHIM
3 - RING GEAR
4 - DIFFERENTIAL BEARING SHIM
5 - COLLAPSIBLE SPACER

SHIM SELECTION

NOTE: It is difficult to salvage the differential side bearings during the removal procedure. Install replacement bearings if necessary.

(1) Remove differential side bearings from differential case.

FRONT AXLE - 186FBI (Continued)

(2) Install ring gear on differential case and tighten bolts to specification.

(3) Install dummy side bearings D-348 on differential case.

(4) Install differential case in the housing.

CAUTION: When installing a Vari-Lok™ differential, the oil feed tube must be pointed to the bottom of the housing. If differential is forced in with the oil feed towards the top, the anti-rotation tabs will be damaged.

(5) Record the thickness of Dummy Shims 8107. Insert the shims between the dummy bearings and the differential housing (Fig. 10).

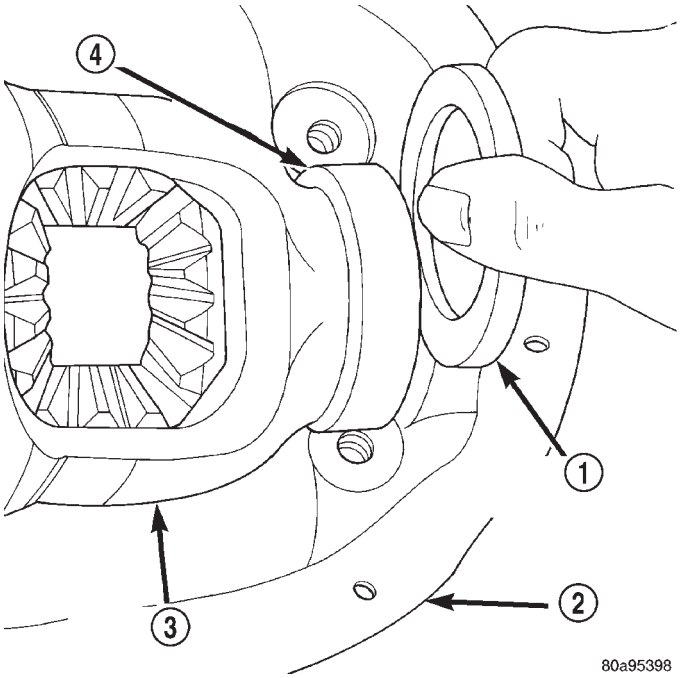

Fig. 10 Dummy Shim Location

1 - DUMMY SHIM - 8107
2 - AXLE HOUSING
3 - DIFFERENTIAL CASE
4 - DUMMY BEARINGS - D-348

(6) Install the marked bearing caps in their correct positions. Install and snug the bolts (Fig. 11).

(7) Using a dead-blow hammer, seat the differential dummy bearings to each side of the axle housing (Fig. 12) and (Fig. 13).

(8) Thread Pilot Stud C-3288-B into rear cover bolt hole below ring gear (Fig. 14).

(9) Attach a dial indicator C-3339 to Pilot Stud. Position the dial indicator plunger on a flat surface between the ring gear bolt heads (Fig. 14).

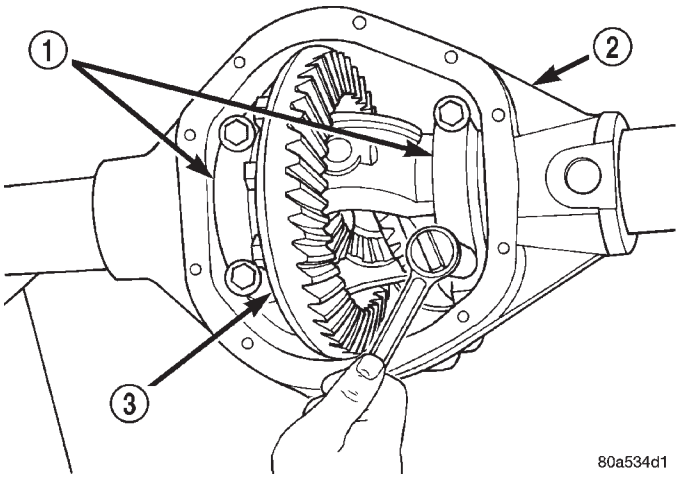

Fig. 11 Bearing Cap Bolts

1 - BEARING CAP
2 - DIFFERENTIAL HOUSING
3 - DIFFERENTIAL CASE

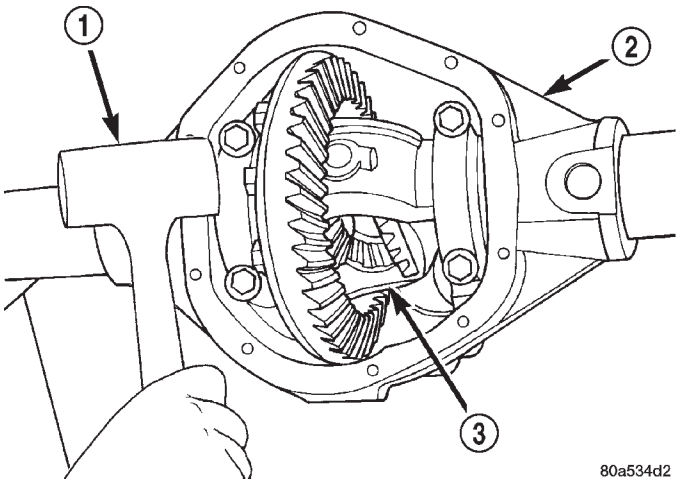

Fig. 12 Seat Dummy Side Bearing

1 - HAMMER
2 - DIFFERENTIAL HOUSING
3 - DIFFERENTIAL CASE

(10) Push and hold differential case to pinion gear side of the housing and zero dial indicator (Fig. 15).

(11) Push and hold differential case to ring gear side of the housing and record dial indicator reading (Fig. 16).

(12) Add 0.006 in. (0.152 mm) to the zero end play total. This new total represents the thickness of shims to compress or preload the new bearings when the differential is installed.

FRONT AXLE - 186FBI (Continued)

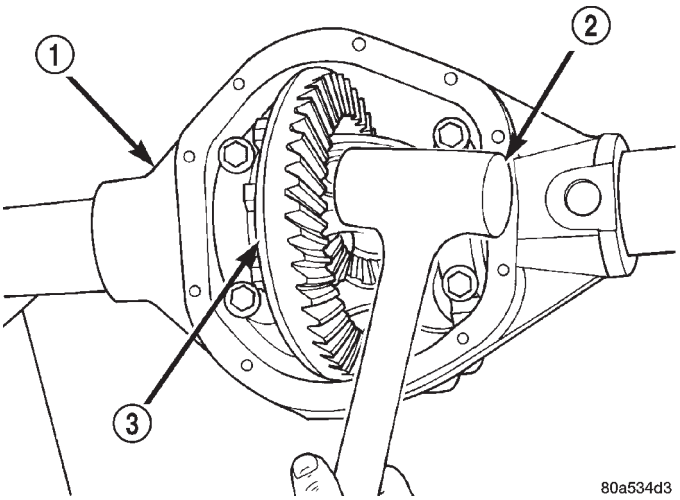

Fig. 13 Seat Dummy Side Bearing

1 - DIFFERENTIAL HOUSING
2 - HAMMER
3 - DIFFERENTIAL CASE

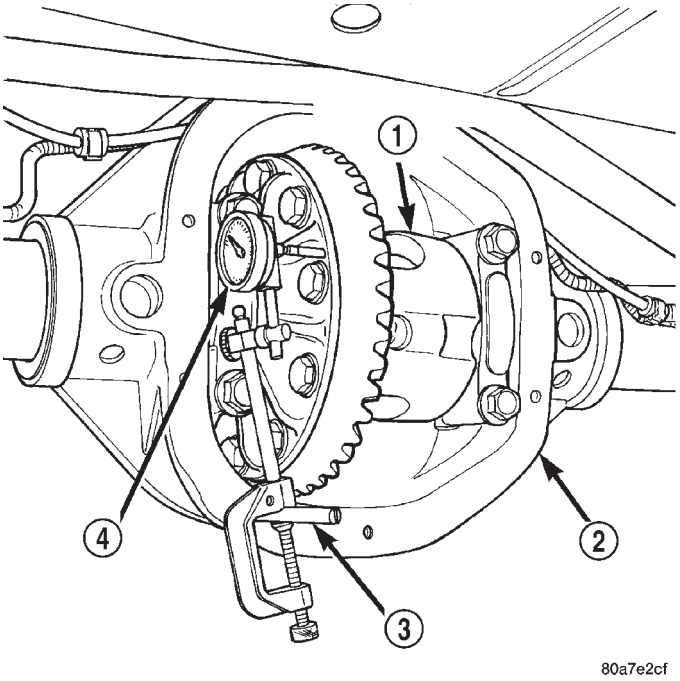

Fig. 14 Differential Side Play

1 - DIFFERENTIAL CASE
2 - DIFFERENTIAL HOUSING
3 - PILOT STUD - C-3288-B
4 - DIAL INDICATOR - C-3339

(13) Rotate dial indicator out of the way on the pilot stud.

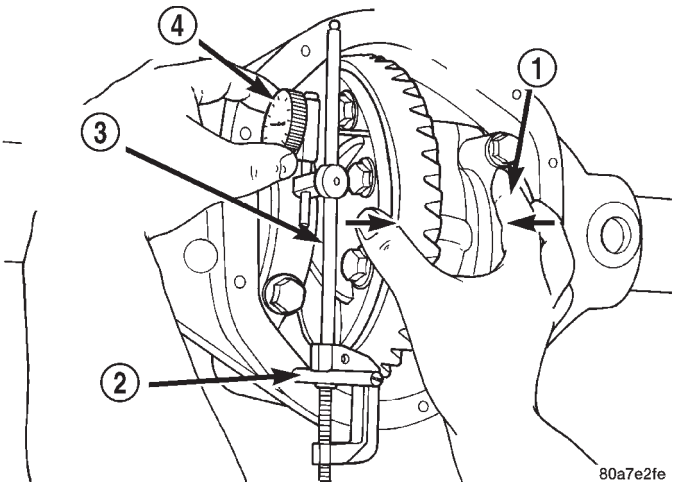

Fig. 15 Zero Dial Indicator

1 - DIFFERENTIAL CASE TO PINION GEAR SIDE
2 - PILOT STUD - C-3288-B
3 - INDICATOR EXTENSION
4 - DIAL INDICATOR FACE

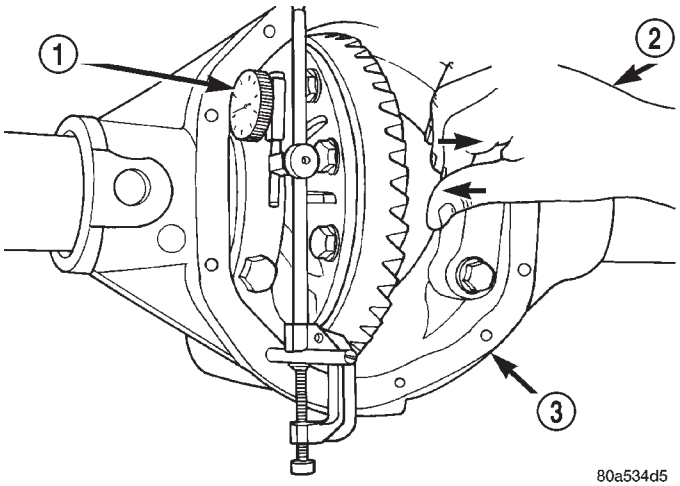

Fig. 16 Dial Indicator

1 - READ DIAL INDICATOR
2 - DIFFERENTIAL CASE TO RING GEAR SIDE
3 - DIFFERENTIAL HOUSING

(14) Remove differential case and dummy bearings from the housing.

(15) Install the pinion gear in the housing. Install the pinion yoke and establish the correct pinion rotating torque.

(16) Install differential case and Dummy Bearings D-348 in the housing.

(17) Install a single dummy Sshim in the ring gear side. Install bearing caps and tighten bolts snug.

FRONT AXLE - 186FBI (Continued)

(18) Seat ring gear side dummy bearing (Fig. 13).

(19) Position the dial indicator plunger on a flat surface between the ring gear bolt heads (Fig. 14).

(20) Push and hold differential case toward pinion gear and zero dial indicator (Fig. 17).

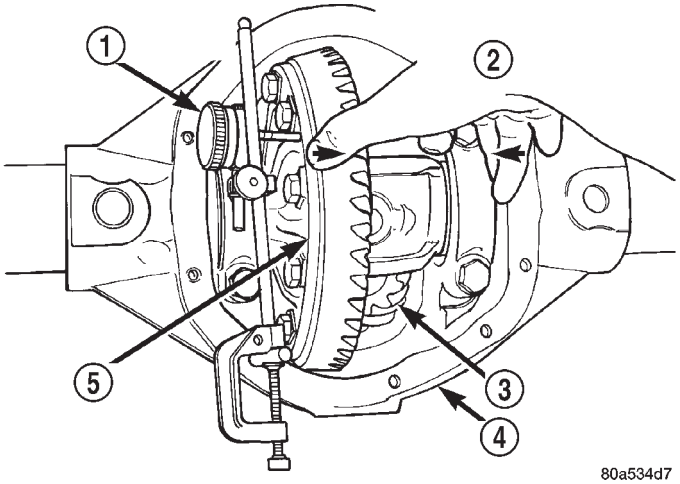

Fig. 17 Zero Dial Indicator

1 - ZERO DIAL INDICATOR FACE
2 - DIFFERENTIAL CASE TO PINION GEAR SIDE
3 - PINION GEAR
4 - DIFFERENTIAL HOUSING
5 - DIFFERENTIAL CASE

(21) Push and hold differential case to ring gear side of the housing and record dial indicator reading (Fig. 18). Add dummy shim thickness to this reading. This will be the total shim thickness to achieve zero backlash.

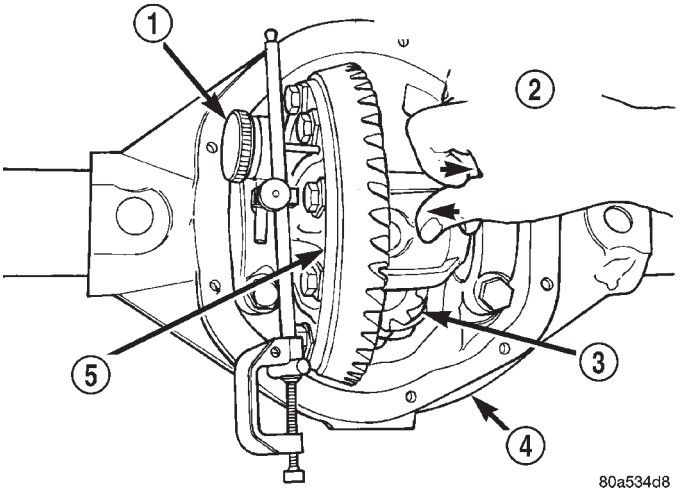

Fig. 18 Dial Indicator Reading

1 - DIAL INDICATOR
2 - DIFFERENTIAL CASE TO RING GEAR SIDE
3 - PINION GEAR
4 - DIFFERENTIAL HOUSING
5 - DIFFERENTIAL CASE

(22) Subtract 0.003 in. (0.076 mm) from the dial indicator reading to compensate for backlash between ring and pinion gears. This total is the thickness shim required to achieve proper backlash.

(23) Subtract the backlash shim thickness from the total preload shim thickness. The remainder is the shim thickness required on the pinion side of the axle housing.

(24) Rotate dial indicator out of the way on pilot stud.

(25) Remove differential case and dummy bearings from the housing.

(26) Install side bearings and cups on differential case.

(27) Install spreader W-129-B, utilizing some items from Adapter Set 6987, on the housing and spread axle opening enough to receive differential case.

(28) Place the bearing preload shims in the axle housing, against the axle tubes.

(29) Install differential case into the housing.

CAUTION: When installing a Vari-Lok™ differential, the oil feed tube must be pointed to the bottom of the housing. If differential is forced in with the oil feed towards the top, the anti-rotation tabs will be damaged.

(30) Remove spreader from the housing.

(31) Rotate the differential case several times to seat the side bearings.

(32) Position the indicator plunger against a ring gear tooth (Fig. 19).

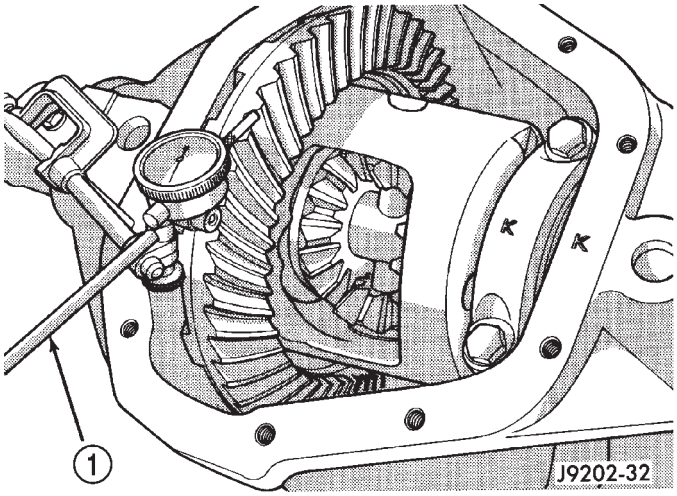

Fig. 19 Ring Gear

1 - DIAL INDICATOR

FRONT AXLE - 186FBI (Continued)

(33) Push and hold ring gear upward while not allowing the pinion gear to rotate.

(34) Zero dial indicator face to pointer.

(35) Push and hold ring gear downward while not allowing the pinion gear to rotate. Dial indicator reading should be between 0.12 mm (0.005 in.) and 0.20 mm (0.008 in.). If backlash is not within specifications transfer the necessary amount of shim thickness from one side of the housing to the other (Fig. 20).

(36) Verify differential case and ring gear runout by measuring ring to pinion gear backlash at eight locations around the ring gear. Readings should not vary more than 0.05 mm (0.002 in.). If readings vary more than specified, the ring gear or the differential case is defective.

After the proper backlash is achieved, perform Gear Contact Pattern Analysis procedure.

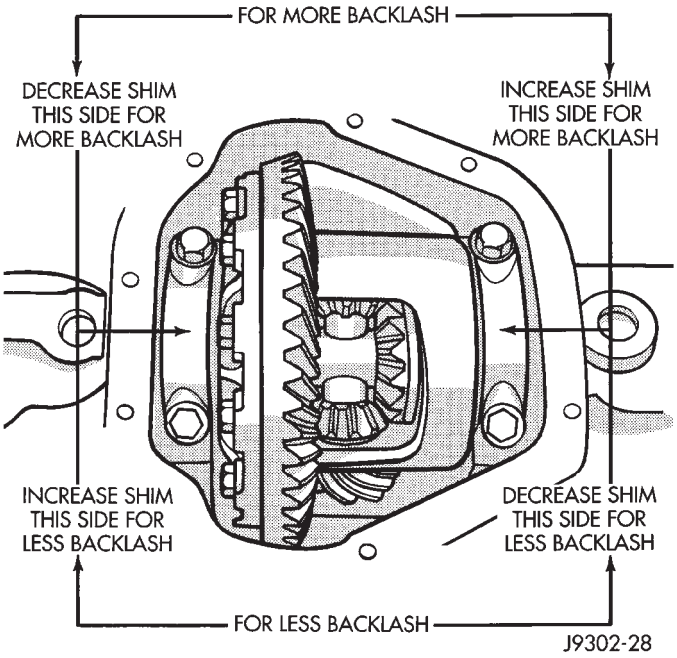

Fig. 20 Backlash Shim

GEAR CONTACT PATTERN

The ring gear and pinion teeth contact patterns will show if the pinion depth is correct in the housing. It will also show if the ring gear backlash has been adjusted correctly. The backlash can be adjusted within specifications to achieve desired tooth contact patterns.

(1) Apply a thin coat of hydrated ferric oxide or equivalent to the drive and coast side of the ring gear teeth.

(2) Wrap, twist and hold a shop towel around the pinion yoke to increase the turning resistance of the pinion. This will provide a more distinct contact pattern.

(3) With a boxed end wrench on a ring gear bolt, rotate the differential case one complete revolution in both directions while a load is being applied from shop towel.

The areas on the ring gear teeth with the greatest degree of contact against the pinion teeth will squeegee the compound to the areas with the least amount of contact. Note and compare patterns on the ring gear teeth to Gear Tooth Contact Patterns chart (Fig. 21)and adjust pinion depth and gear backlash as necessary.

DIFFERENTIAL BEARING PRELOAD CHECK

The final check on the differential assembly before installing the axles is torque to rotate pinion and differential combined. This will verify the correct differential bearing preload.

Torque to rotate the differential and pinion should be the torque to rotate the pinion plus 0.79-1.24 N·m (7-11 in. lbs.).

FRONT AXLE - 186FBI (Continued)

DRIVE SIDE OF RING GEAR TEETH	COAST SIDE OF RING GEAR TEETH	
HEEL 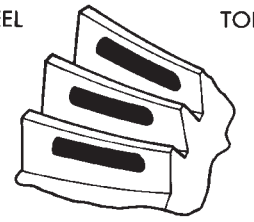 TOE	TOE 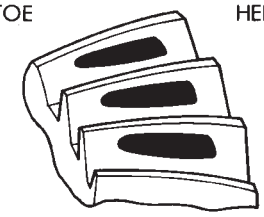 HEEL	DESIRABLE CONTACT PATTERN. PATTERN SHOULD BE CENTERED ON THE DRIVE SIDE OF TOOTH. PATTERN SHOULD BE CENTERED ON THE COAST SIDE OF TOOTH, BUT MAY BE SLIGHTLY TOWARD THE TOE. THERE SHOULD ALWAYS BE SOME CLEARANCE BETWEEN CONTACT PATTERN AND TOP OF THE TOOTH.
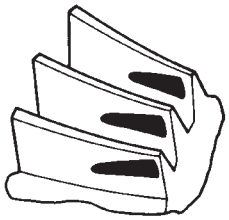	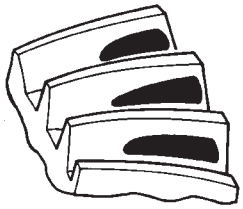	RING GEAR BACKLASH CORRECT. **THINNER** PINION GEAR DEPTH SHIM REQUIRED.
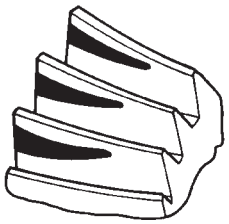	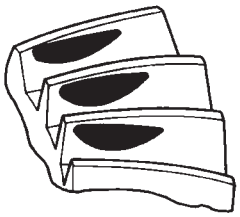	RING GEAR BACKLASH CORRECT. **THICKER** PINION GEAR DEPTH SHIM REQUIRED.
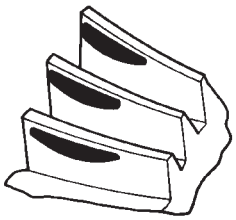	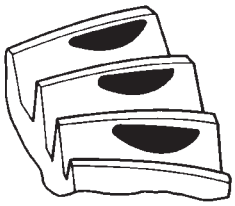	PINION GEAR DEPTH SHIM CORRECT. **DECREASE** RING GEAR BACKLASH.
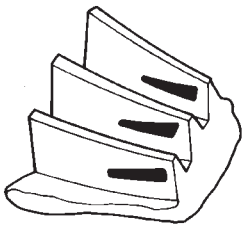	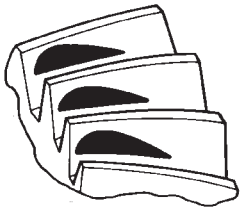	PINION GEAR DEPTH SHIM CORRECT. **INCREASE** RING GEAR BACKLASH.

J9003-24

Fig. 21 Gear Tooth Contact Patterns

SPECIFICATIONS

FRONT AXLE - 186FBI

AXLE SPECIFICATIONS

DESCRIPTION	SPECIFICATION
Axle Ratio	3.07, 3.55, 3.73, 4.10
Differential Side Gear Clearance	0.13-0.20 mm (0.005-0.008 in.)
Differential Bearing Preload	0.152 mm (0.006 in.)
Ring Gear Diameter	186 mm (7.33 in.)
Ring Gear Backlash	0.13-0.20 mm (0.005-0.008 in.)
Pinion Gear Std. Depth	92.08 mm (3.625 in.)
Pinion Bearing Preload - Original Bearings	1-2 N·m (10-20 in. lbs.)
Pinion Bearing Preload - New Bearings	1.7-3.4 N·m (15-30 in. lbs.)

TORQUE SPECIFICATIONS

DESCRIPTION	N·m	Ft. Lbs.	In. Lbs.
Fill Hole Plug	34	25	—
Differential Cover Bolts	41	30	—
Bearing Cap Bolts	61	45	—
Ring Gear Bolts	108	80	—
Axle Nut	237	175	—
Hub Bearing Bolts	102	75	—
Lower Ball Stud Nut	108	80	—
Upper Ball Stud Nut	101	75	—

SPECIAL TOOLS

AXLE

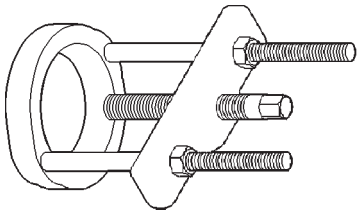

Puller C-293-PA

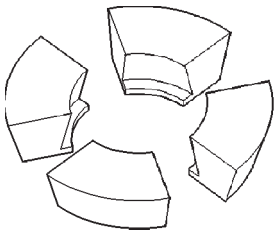

Adapter 8352

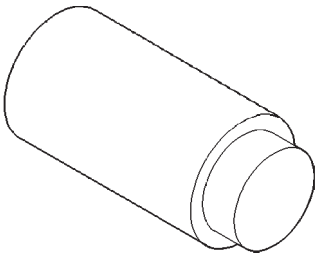

Adapter Plug SP-3289

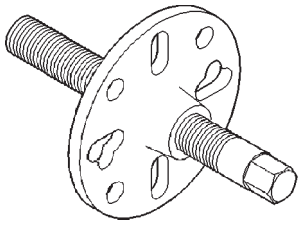

Puller C-452

SPECIAL TOOLS (Continued)

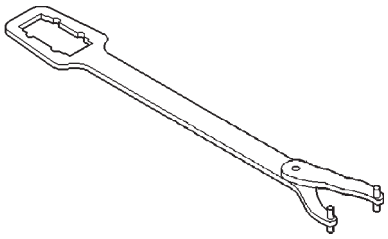

Wrench Flange C-3281

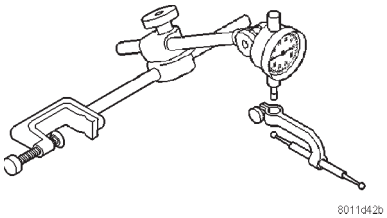

Dial Indicator C-3339

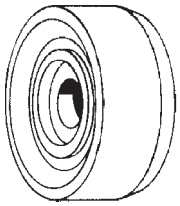

Installer C-3716-A

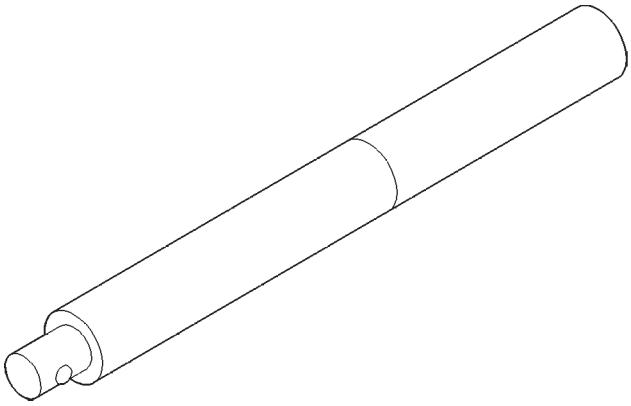

Handle C-4171

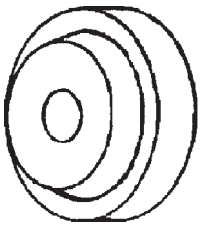

Installer D-146

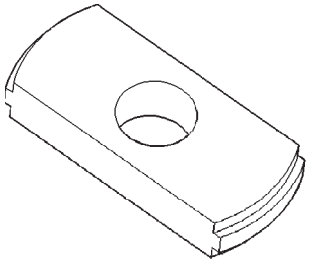

Remover D-149

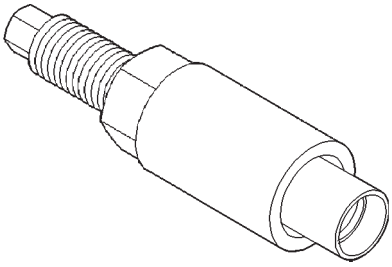

Installer W-162-D

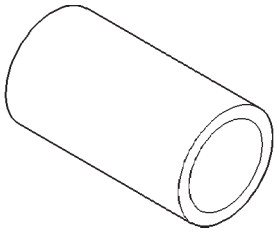

Cup 8109

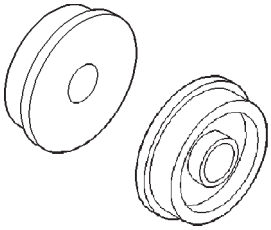

Installer Discs 8110

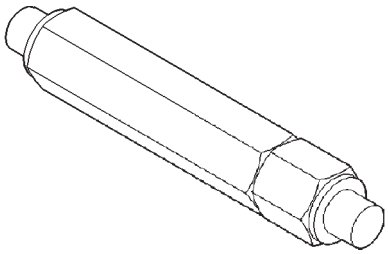

Turnbuckle 6797

SPECIAL TOOLS (Continued)

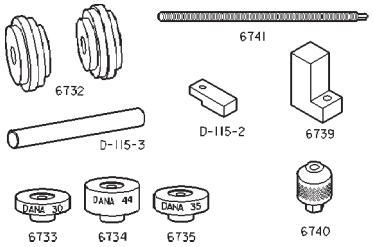

Pinion Depth Set 6774

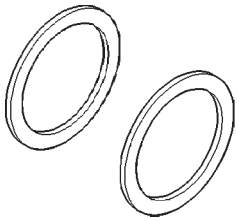

Shims Dummy 8107

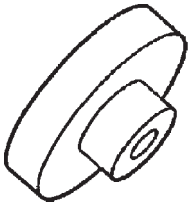

Pinion Block 6733

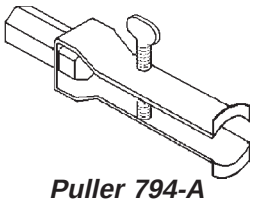

Puller 794-A

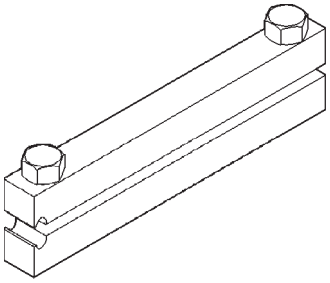

Installer Clamp C-4975-A

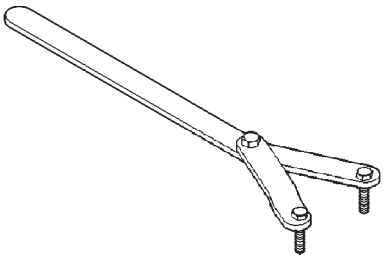

Spanner Wrench 6958

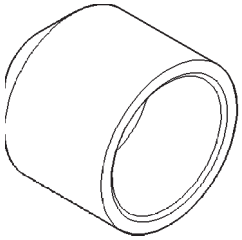

Installer 8108

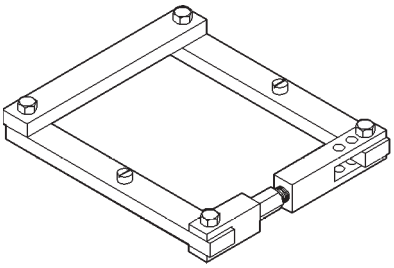

Spreader W-129-B

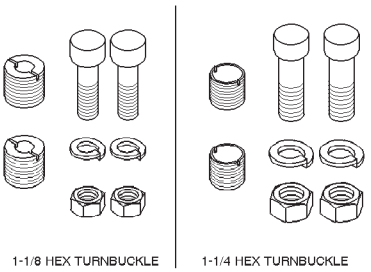

Adapter Kit 6987

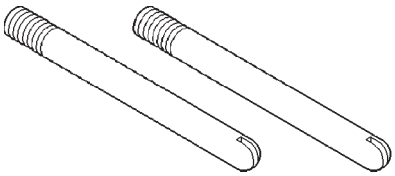

Pilot Stud C-3288-B

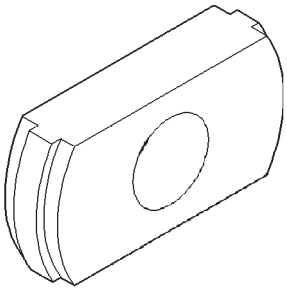

Remover C-4345

SPECIAL TOOLS (Continued)

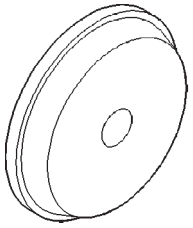

Installer D-130

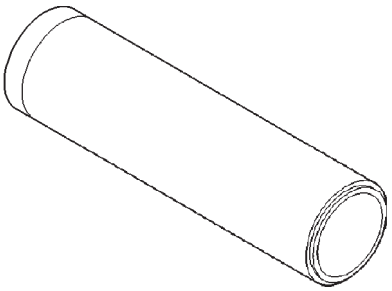

Installer W-262

AXLE SHAFTS

REMOVAL

If the axle shaft and hub bearing are being removed in order to service another component, the axle shaft and hub bearing can be removed as an assembly.

(1) Raise and support the vehicle.

(2) Remove the wheel and tire assembly.

(3) Remove brake caliper (Refer to 5 - BRAKES/HYDRAULIC/MECHANICAL/DISC BRAKE CALIPERS - REMOVAL) , rotor (Refer to 5 - BRAKES/HYDRAULIC/MECHANICAL/ROTORS - REMOVAL) and ABS wheel speed sensor. (Refer to 5 - BRAKES/ELECTRICAL/FRONT WHEEL SPEED SENSOR - REMOVAL)

(4) Remove the cotter pin, nut retainer and axle hub nut.

(5) Remove the hub bearing bolts (Fig. 22).

(6) Remove hub bearing and axle shaft assembly (Fig. 23). **Avoid damaging the axle shaft oil seals in the axle housing.**

(7) Remove the brake rotor shield from the hub bearing or knuckle.

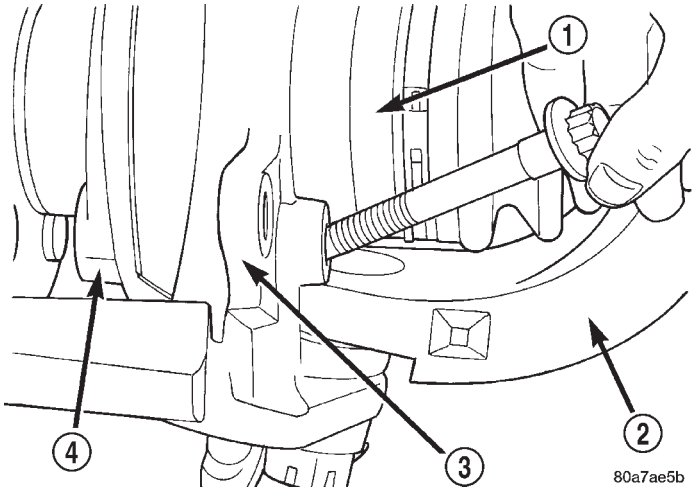

Fig. 22 Hub Bearing Bolts

1 - AXLE SHAFT
2 - AXLE
3 - KNUCKLE
4 - HUB BEARING

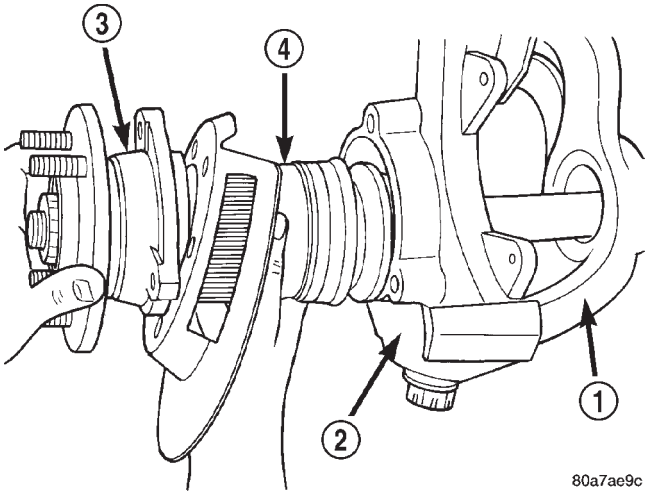

Fig. 23 Hub Bearing and Axle Assembly

1 - AXLE
2 - KNUCKLE
3 - HUB BEARING
4 - AXLE SHAFT

INSTALLATION

(1) Thoroughly clean the axle shaft and apply a thin film of Mopar® Wheel Bearing Grease or equivalent to the shaft splines, seal contact surface and hub bore.

(2) Install the brake rotor shield to the knuckle.

(3) Install the hub bearing and axle shaft assembly or axle shaft into the housing and differential side gears. Avoid damaging the axle shaft oil seals in the axle housing.

(4) Install the hub bearing, if necessary.

(5) Install hub to knuckle bolts and tighten to 102 N·m (75 ft. lbs.).

(6) Install hub washer and nut if necessary. Tighten axle nut to 237 N·m (175 ft. lbs.). Install the nut retainer and a new cotter pin.

(7) Install ABS wheel speed sensor. (Refer to 5 - BRAKES/ELECTRICAL/FRONT WHEEL SPEED SENSOR - INSTALLATION)

AXLE SHAFTS (Continued)

(8) Install brake rotor and caliper. (Refer to 5 - BRAKES/HYDRAULIC/MECHANICAL/ROTORS - INSTALLATION)
(9) Install the wheel and tire assembly.
(10) Remove support and lower the vehicle.

AXLE SHAFT SEALS

REMOVAL

(1) Raise and support vehicle.
(2) Remove differential assembly.
(3) Remove the inner axle shaft seals with a pry bay.

INSTALLATION

(1) Remove any sealer remaining from original seals.
(2) Remove sealer from axle tube to housing junction, if necessary.
(3) Install oil seals with Discs 8110 and Turnbuckle 6797 (Fig. 24). Tighten tool until disc bottoms in housing.

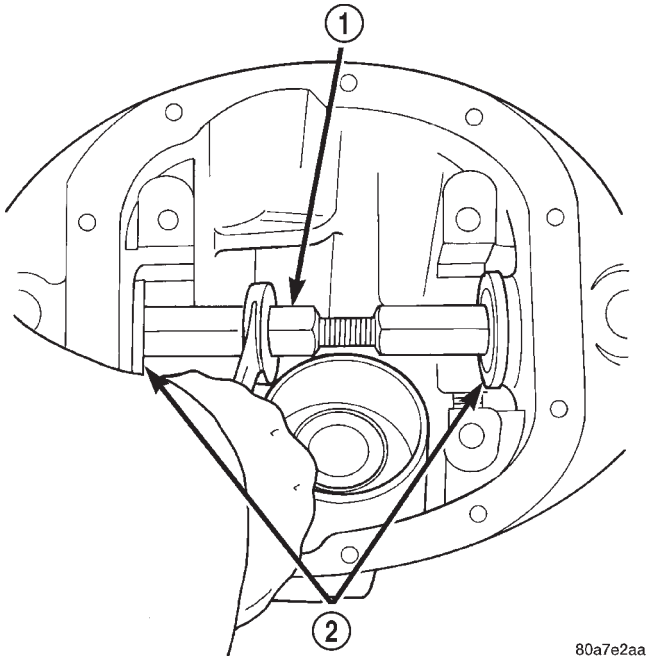

Fig. 24 Axle Seal Tools

1 - TURNBUCKLE - 6797
2 - DISCS - 8110

(4) Install differential assembly and fill with fluid.
(5) Remove support and lower vehicle.

AXLE - C/V JOINT

REMOVAL

The only service procedure to be performed on the axle C/V joint, is the replacement of the joint seal boot. If any failure of internal axle shaft components is diagnosed during a vehicle road test, the axle shaft must be replaced as an assembly.

(1) Remove axle shaft.
(2) Remove large boot clamp retaining C/V joint sealing boot, to C/V joint housing and discard.
(3) Remove small clamp that retains outer C/V joint sealing boot to axle shaft and discard (Fig. 25).
(4) Remove sealing boot from outer C/V joint housing and slide it down and off the axle shaft.

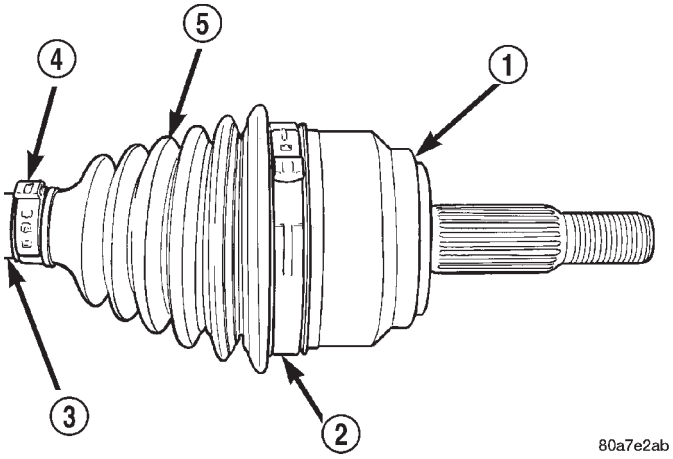

Fig. 25 Outer C/V Joint Seal Boot Clamps

1 - AXLE C/V JOINT HOUSING
2 - LARGE CLAMP
3 - AXLE SHAFT
4 - SMALL CLAMP
5 - SEALING BOOT

(5) Thoroughly clean and inspect axle C/V joint assembly and axle shaft for any signs of excessive wear. **If any parts show signs of excessive wear, the axle shaft assembly will require replacement. Component parts of these axle shaft assemblies are not serviceable.**

INSTALLATION

The only service procedure to be performed on the axle C/V joint, is the replacement of the joint seal boot. If any failure of internal axle shaft components is diagnosed during a vehicle road test, the axle shaft must be replaced as an assembly.

(1) Slide new sealing boot large clamp over axle shaft and onto C/V joint.
(2) Slide the axle C/V joint sealing boot onto the axle shaft.
(3) Distribute 1/2 the amount of grease provided in seal boot service package **(DO NOT USE ANY OTHER TYPE OF GREASE)** into axle C/V joint assembly housing. Put the remaining amount into the sealing boot.
(4) Install axle C/V joint boot small clamp evenly on sealing boot.

AXLE - C/V JOINT (Continued)

(5) Position axle C/V joint boot into retaining groove in axle C/V joint housing. Then, install large retaining clamp evenly on sealing boot.

(6) Clamp small sealing boot clamp onto axle shaft using Clamp Installer C-4975A. Place clamp tool over bridge of clamp (Fig. 26).

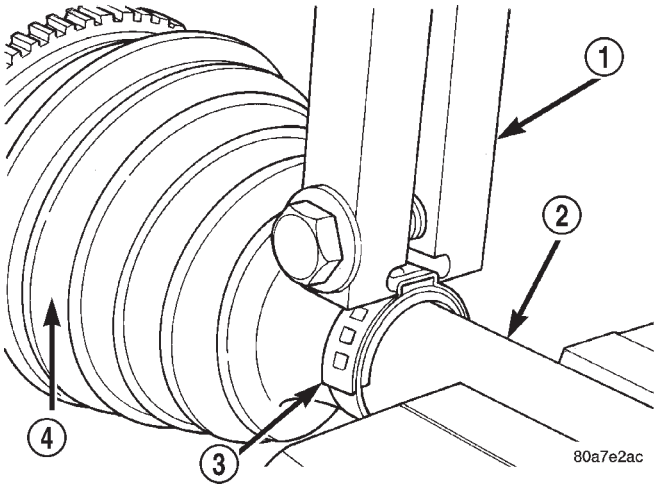

Fig. 26 Crimping Tool

1 - CLAMP TOOL
2 - AXLE SHAFT
3 - CLAMP
4 - SEALING BOOT

(7) Tighten nut on the tool until jaws on tool are closed completely together, face to face (Fig. 27).

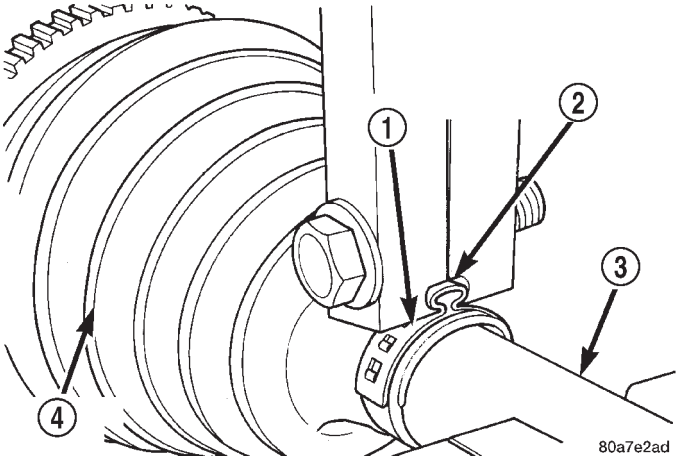

Fig. 27 Crimping Clamp

1 - CLAMP
2 - JAWS
3 - AXLE SHAFT
4 - SEALING BOOT

CAUTION: Seal must not be dimpled, stretched or out of shape in any way. If seal is NOT shaped correctly, equalize pressure in seal and shape it by hand.

(8) Place the clamp tool over bridge of clamp (Fig. 28).

(9) Tighten nut on the tool until jaws on tool are closed completely together, face to face.

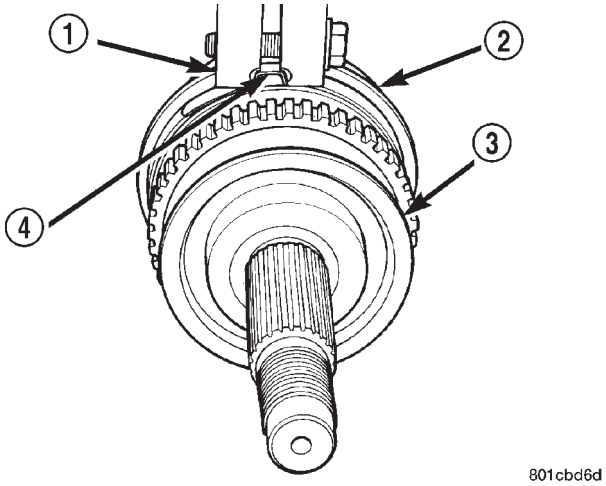

Fig. 28 Large Boot Clamp

1 - CLAMP TOOL
2 - SEALING BOOT
3 - OUTER C/V JOINT
4 - BOOT CLAMP

AXLE - U-JOINT

REMOVAL

Single cardan U-joint components are not serviceable. If defective they must be replaced as a unit.

CAUTION: Clamp only the narrow forged portion of the yoke in the vise. To avoid distorting the yoke, do not over tighten the vise jaws.

(1) Remove axle shaft.

(2) Remove the bearing cap retaining snap rings (Fig. 29).

NOTE: Saturate the bearing caps with penetrating oil prior to removal.

(3) Locate a socket with an inside diameter is larger than the bearing cap. Place the socket (receiver) against the yoke and around the perimeter of the bearing cap to be removed.

(4) Locate a socket with an outside diameter is smaller than the bearing cap. Place the socket (driver) against the opposite bearing cap.

(5) Position the yoke with the sockets in a vise (Fig. 30).

(6) Tighten the vise jaws to force the bearing cap into the larger socket (receiver).

(7) Release the vise jaws. Remove the sockets and bearing cap that was partially forced out of the yoke.

AXLE - U-JOINT (Continued)

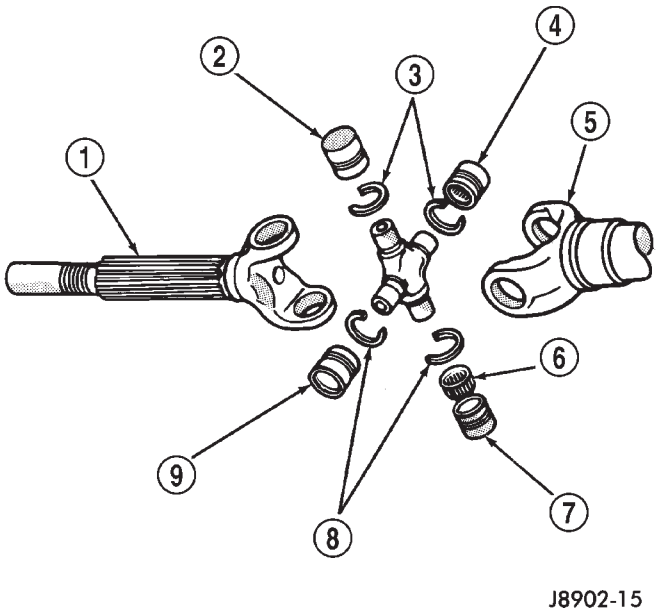

Fig. 29 Axle Shaft Outer U—Joint

1 - SHAFT YOKE
2 - BEARING CAP
3 - SNAP RINGS
4 - BEARING CAP
5 - SPINDLE YOKE
6 - BEARING
7 - BEARING CAP
8 - SNAP RINGS
9 - BEARING CAP

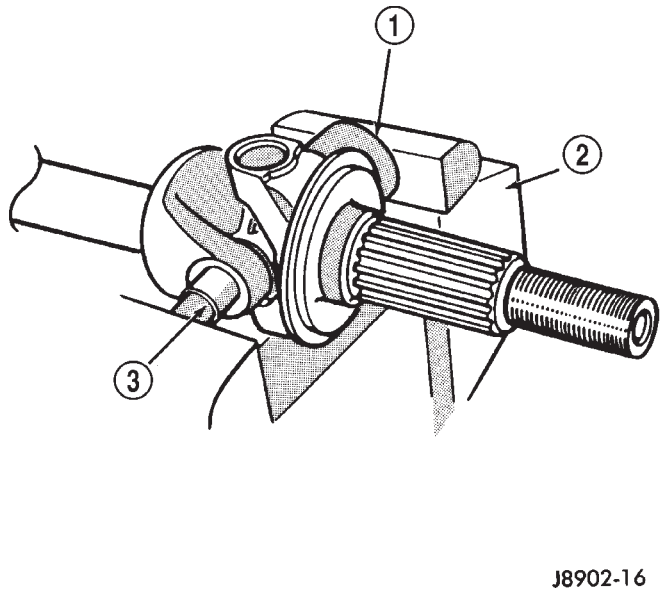

Fig. 30 Yoke Bearing Cap

1 - LARGE-DIAMETER SOCKET WRENCH
2 - VISE
3 - SMALL-DIAMETER SOCKET WRENCH

(8) Repeat the above procedure for the remaining bearing cap and remove spider from the propeller shaft yoke.

INSTALLATION

(1) Pack the bearing caps 1/3 full of wheel bearing lubricant. Apply extreme pressure (EP), lithium-base lubricant to aid in installation.

(2) Position the spider in the yoke. Insert the seals and bearings. Tap the bearing caps into the yoke bores far enough to hold the spider in position.

(3) Place the socket (driver) against one bearing cap. Position the yoke with the socket in a vise.

(4) Tighten the vise to force the bearing caps into the yoke. Force the caps enough to install the retaining clips.

(5) Install the bearing cap retaining clips.

(6) Install axle shaft.

PINION SEAL

REMOVAL

(1) Raise and support the vehicle.

(2) Remove wheel and tire assemblies.

(3) Remove brake rotors and calipers, refer to Group 5 Brakes for procedures.

(4) Mark propeller shaft and pinion companion flange for installation reference.

(5) Remove the propeller shaft from the pinion companion flange.

(6) Rotate the pinion gear a minimum of ten times and verify the pinion rotates smoothly.

(7) Record torque necessary to rotate the pinion gear with a inch pound dial-type torque wrench.

(8) Using a short piece of pipe and Spanner Wrench 6958 to hold the pinion companion flange and remove the pinion nut and washer.

(9) Remove pinion companion flange with Remover C-452 and Flange Wrench C-3281.

(10) Remove pinion seal with Remover 7794-A and a slide hammer (Fig. 31).

INSTALLATION

(1) Apply a light coating of gear lubricant on the lip of pinion seal. Install seal with Installer 8108 and Handle C-4171 (Fig. 32).

(2) Install pinion companion flange on the pinion gear with Installer W-162-D, Cup 8109 and Wrench 6958.

CAUTION: Do not exceed the minimum tightening torque 216 N·m (160 ft. lbs.) when installing the pinion companion flange retaining nut at this point. Damage to collapsible spacer or bearings may result.

PINION SEAL (Continued)

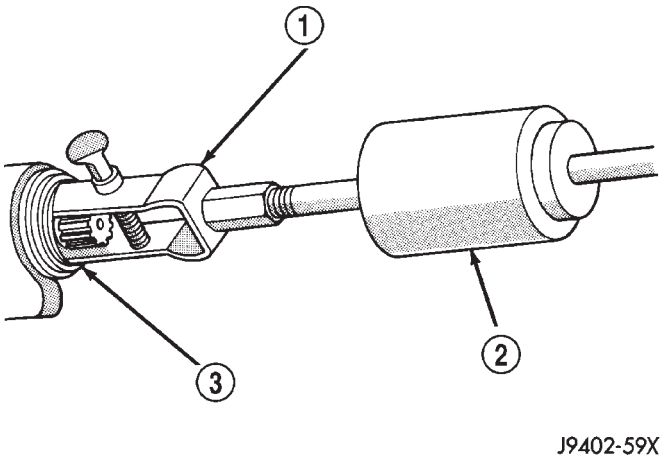

Fig. 31 Pinion Seal

1 - REMOVER - 7794-A
2 - SLIDE HAMMER
3 - PINION SEAL

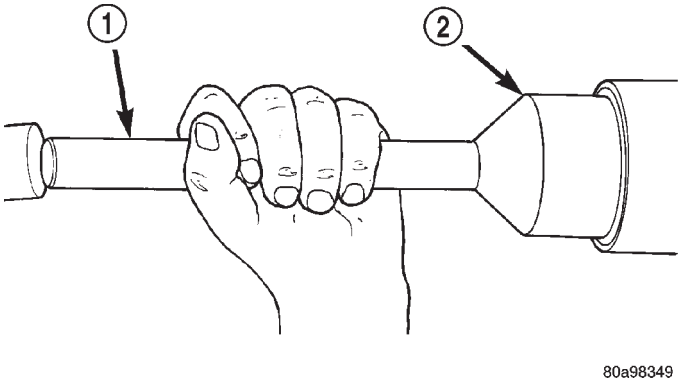

Fig. 32 Pinion Seal

1 - HANDLE - C-4171
2 - INSTALLER - 8108

(3) Install the pinion washer and a new nut on the pinion gear. **Tighten the nut only enough to remove the shaft end play.**

CAUTION: Never loosen pinion gear nut to decrease pinion gear bearing rotating torque and never exceed specified preload torque. If preload torque or rotating torque is exceeded a new collapsible spacer must be installed.

(4) Rotate pinion a minimum of ten time and verify pinion rotates smoothly. Rotate the pinion shaft with an inch pound torque wrench. Rotating torque should be equal to the reading recorded during removal plus 0.56 N·m (5 in. lbs.) (Fig. 33).

(5) If the rotating torque is low, use Spanner Wrench 6958 to hold the pinion companion flange (Fig. 34), and tighten the pinion shaft nut in 6.8 N·m

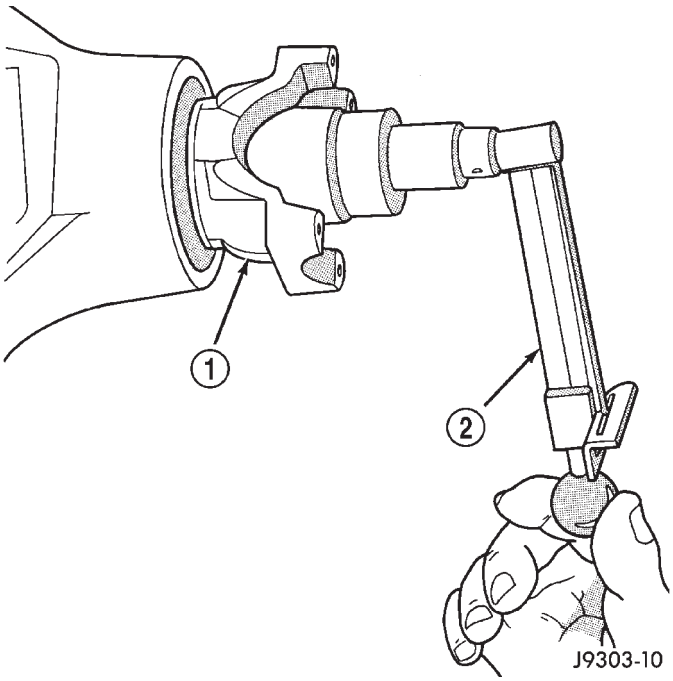

Fig. 33 Pinion Rotation Torque - Typical

1 - PINION YOKE
2 -TORQUE WRENCH

(5 ft. lbs.) increments until proper rotating torque is achieved.

CAUTION: If the maximum tightening torque is reached prior to reaching the required rotating torque, the collapsible spacer may have been damaged. Replace the collapsible spacer.

(6) Install propeller shaft with installation reference marks aligned.

(7) Fill differential with gear lubricant.

(8) Install brake rotors (Refer to 5 - BRAKES/HYDRAULIC/MECHANICAL/ROTORS - INSTALLATION) and calipers. (Refer to 5 - BRAKES/HYDRAULIC/MECHANICAL/DISC BRAKE CALIPERS - INSTALLATION)

(9) Install wheel and tire assemblies.

(10) Lower the vehicle.

COLLAPSIBLE SPACER

REMOVAL

(1) Raise and support the vehicle.

(2) Remove wheel and tire assemblies.

(3) Remove brake rotors and calipers. Refer to Brakes for procedures.

(4) Mark the propeller shaft and pinion companion flange for installation reference.

COLLAPSIBLE SPACER (Continued)

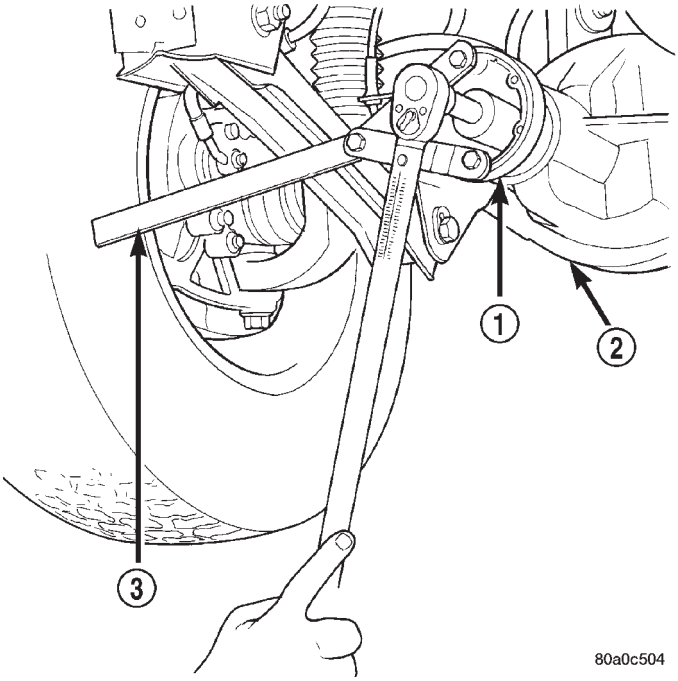

Fig. 34 Pinion Shaft Nut

1 - PINION FLANGE
2 - FRONT AXLE
3 - SPANNER WRENCH - 6958

(5) Remove propeller shaft from the pinion companion flange.

(6) Rotate pinion gear a minimum of ten times and verify pinion rotates smoothly.

(7) Record pinion gear rotating torque with a torque wrench for installation reference.

(8) Remove pinion nut and washer. Using a short piece of pipe and Spanner Wrench 6958 to hold the pinion companion flange.

(9) Remove pinion companion flange with Remover C-452 and Flange Wrench C-3281.

(10) Remove pinion shaft seal with Remover 7794-A and slide hammer (Fig. 35).

(11) Remove front pinion bearing using a pair of pick tools to pull the bearing straight off pinion shaft. If the bearing becomes bound on the pinion shaft, lightly tap the end of the pinion gear with a rawhide or rubber mallet.

(12) Remove the collapsible spacer.

INSTALLATION

(1) Install a new collapsible preload spacer on pinion shaft.

(2) Install pinion front bearing.

(3) Apply a light coating of gear lubricant on the lip of pinion seal. Install seal with Installer 8108 and Handle C-4171 (Fig. 36).

(4) Install pinion companion flange with Installer W-162-D, Cup 8109 and Flange Holder 6958.

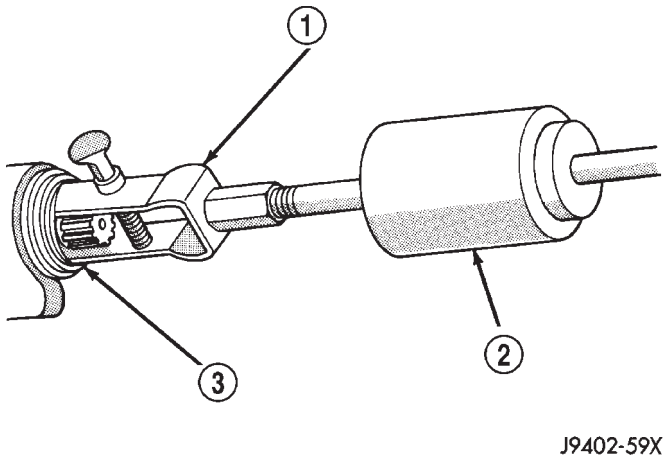

Fig. 35 Pinion Seal Puller

1 - REMOVER
2 - SLIDE HAMMER
3 - PINION SEAL

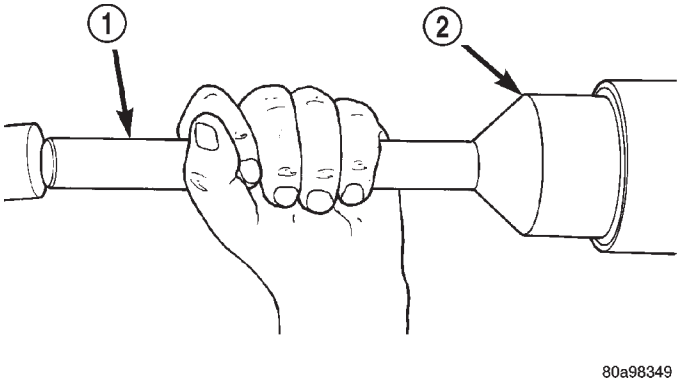

Fig. 36 Pinion Seal Installer

1 - HANDLE
2 - INSTALLER

(5) Install pinion washer and a new nut on the pinion gear. Tighten the nut to 216 N·m (160 ft. lbs.) minimum. **Do not overtighten.** Maximum torque is 678 N·m (500 ft. lbs.).

CAUTION: Never loosen pinion gear nut to decrease pinion gear bearing rotating torque and never exceed specified preload torque. If preload torque is exceeded a new collapsible spacer must be installed.

(6) Using Flange Wrench 6958, a length of 1 in. pipe and a torque wrench set at 678 N·m (500 ft. lbs.) crush collapsible spacer until bearing end play is taken up (Fig. 37).

(7) Slowly tighten the nut in 6.8 N·m (5 ft. lbs.) increments until the required rotating torque is achieved. Measure the rotating torque frequently to avoid over crushing the collapsible spacer.

COLLAPSIBLE SPACER (Continued)

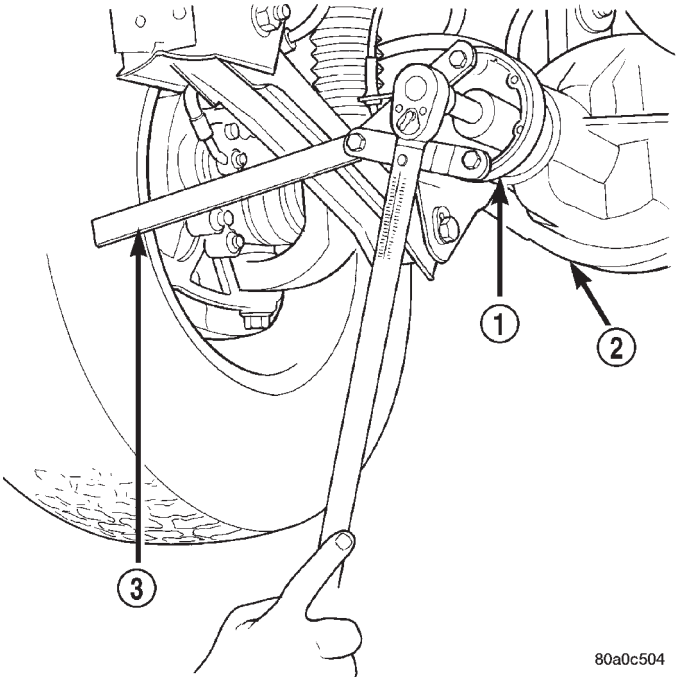

Fig. 37 Companion Flange

1 - COMPANION FLNAGE
2 - DIFFERENTIAL HOUSING
3 - SPANNER WRENCH

(8) Rotate pinion gear a minimum of ten times and verify pinion rotates smoothly. Check rotating torque with an inch pound torque wrench. The rotating torque should be the amount recorded during removal plus:

- Original Bearings: 0.56 N·m (5 in. lbs.).
- New Bearings: 1.7 to 3.4 N·m (15 to 35 in. lbs.).

(9) Install propeller shaft with reference marks aligned.

(10) Install brake rotors and calipers. Refer to Brakes for proper procedures.

(11) Add gear lubricant if necessary. Refer to Lubricant Specifications for lubricant requirements.

(12) Install wheel and tire assemblies.

(13) Lower vehicle.

DIFFERENTIAL

REMOVAL

(1) Raise and support the vehicle.

(2) Remove lubricant fill hole plug from the differential housing cover.

(3) Remove differential housing cover and drain the lubricant from the housing.

(4) Clean the housing cavity with a flushing oil, light engine oil or lint free cloth. **Do not use water, steam, kerosene or gasoline for cleaning.**

(5) Remove hub bearings and axle shafts.

(6) Note the installation reference letters stamped on the bearing caps and housing machined sealing surface (Fig. 38).

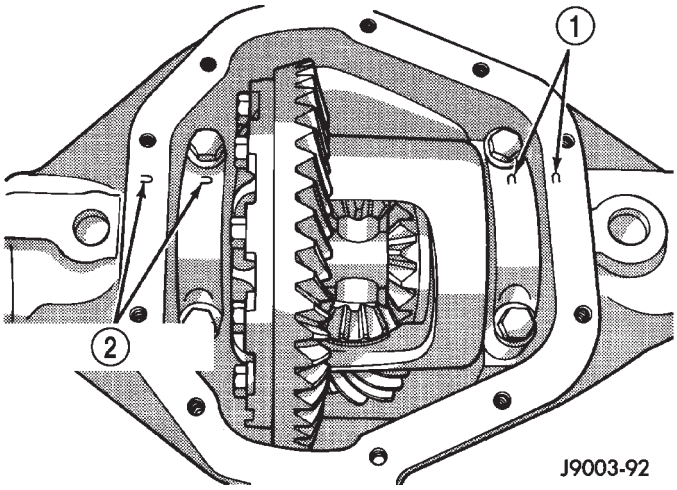

Fig. 38 Bearing Cap Identification

1 - REFERENCE LETTERS
2 - REFERENCE LETTERS

(7) Loosen the differential bearing cap bolts.

(8) Position Spreader W-129-B, utilizing some items from Adapter Kit 6987, with the tool dowel pins seated in the locating holes (Fig. 39). Install the holddown clamps and tighten the tool turnbuckle finger-tight.

(9) Install a Pilot Stud C-3288-B at the left side of the differential housing. Attach Dial Indicator C-3339 to stud. Load the lever adapter against the opposite side of the housing (Fig. 40) and zero the indicator.

(10) Spread housing enough to remove the differential case from the housing. Measure the distance with the dial indicator (Fig. 41).

CAUTION: Do not spread over 0.50 mm (0.020 in). If the housing is over-spread, it could be distorted or damaged.

(11) Remove the dial indicator.

(12) Hold differential case in position and remove differential bearing cap bolts and caps.

(13) Remove differential from the housing and tag differential bearing cups to ensure location (Fig. 42).

(14) Remove differential case preload shims from the axle housing.

(15) Remove spreader from housing. Tag differential bearing preload shims to ensure correct location.

DIFFERENTIAL (Continued)

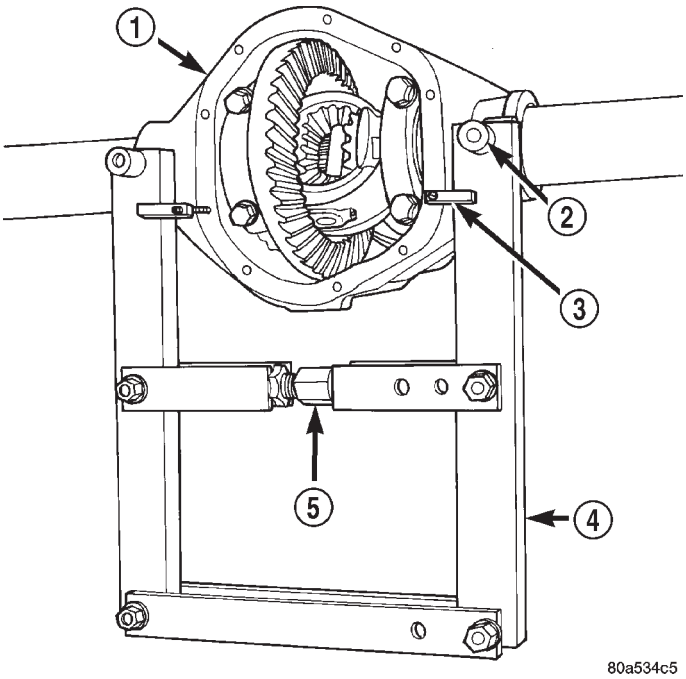

Fig. 39 Differential Housing And Spreader

1 - DIFFERENTIAL HOUSING
2 - DOWEL
3 - SAFETY HOLD DOWN
4 - SPREADER
5 - TURNBUCKLE

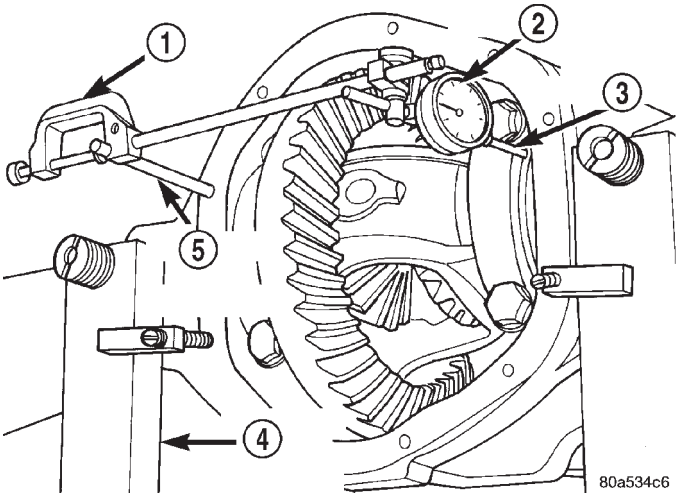

Fig. 40 Dial Indicator Location

1 - CLAMP
2 - DIAL INDICATOR
3 - LEVER ADAPTER
4 - SPREADER
5 - PILOT STUD

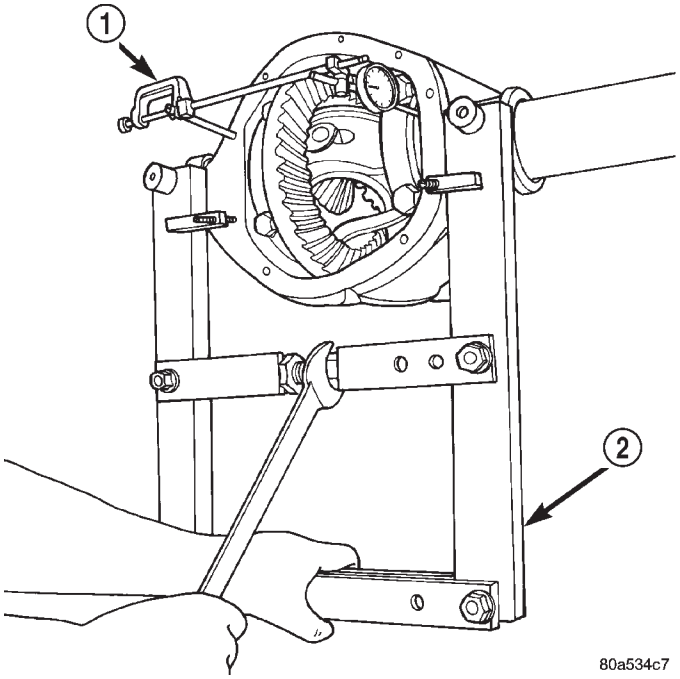

Fig. 41 Spread Housing

1 - DIAL INDICATOR
2 - SPREADER

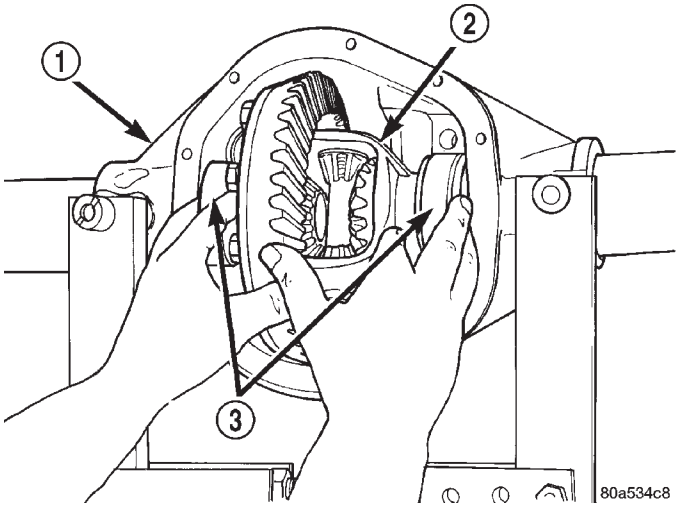

Fig. 42 Differential Case Removal

1 - DIFFERNTIAL HOUSING
2 - DIFFERENTIAL CASE
3 - BEARING CUPS

DISASSEMBLY

(1) Remove the ring gear.

(2) Drive out the roll pin holding pinion gear mate shaft with a punch (Fig. 43).

DIFFERENTIAL (Continued)

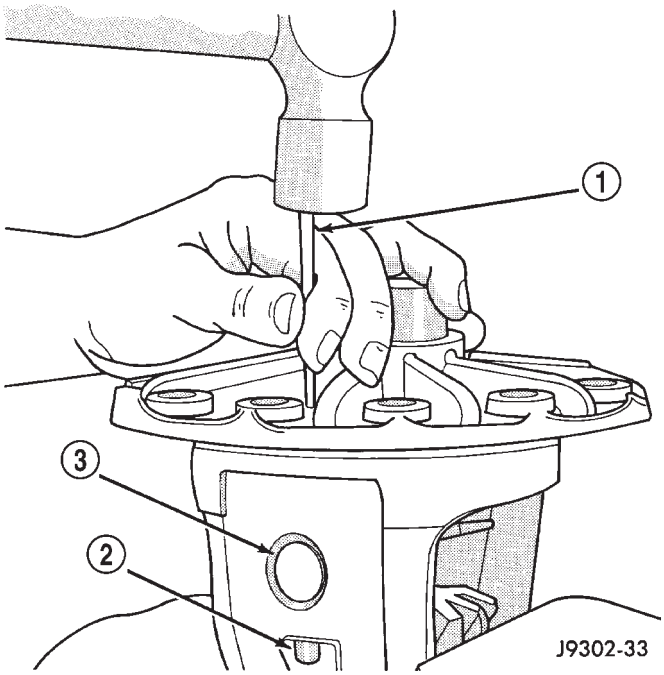

Fig. 43 Mate Shaft Roll Pin

1 - DRIFT
2 - LOCKPIN
3 - MATE SHAFT

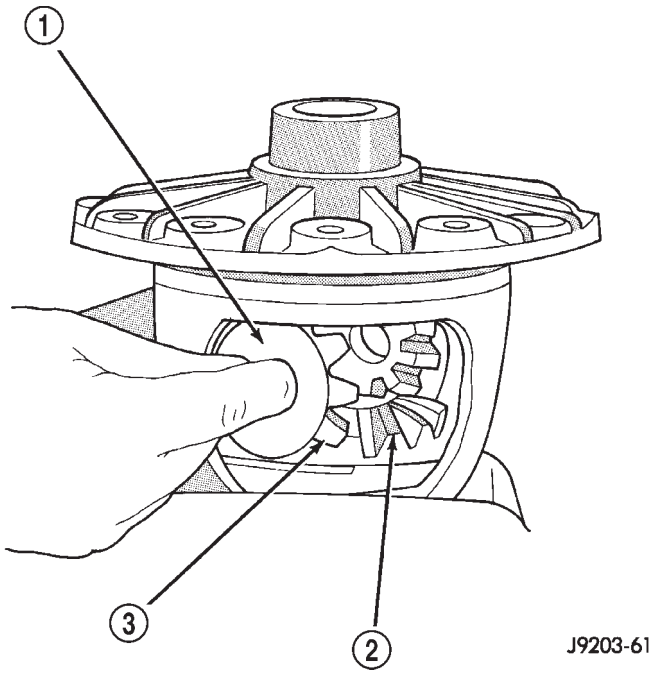

Fig. 44 Pinion Mate Gear

1 - THRUST WASHER
2 - SIDE GEAR
3 - PINION MATE GEAR

(3) Remove pinion gear mate shaft from the differential case and the pinion mate gears.

(4) Rotate differential side gears and remove the pinion mate gears and thrust washers (Fig. 44).

(5) Remove differential side gears and thrust washers.

ASSEMBLY

(1) Install differential side gears and thrust washers.

(2) Install pinion mate gears and thrust washers.

(3) Install pinion gear mate shaft. Align the roll pin holes in shaft and the differential case.

(4) Install the roll pin in the differential case (Fig. 45).

(5) Install the ring gear.

(6) Lubricate all differential components with hypoid gear lubricant.

INSTALLATION

NOTE: If replacement differential bearings or differential case are being installed, differential side bearing shim requirements may change. Refer to Adjustments (Differential Bearing Preload and Gear Backlash) to determine the proper shim selection.

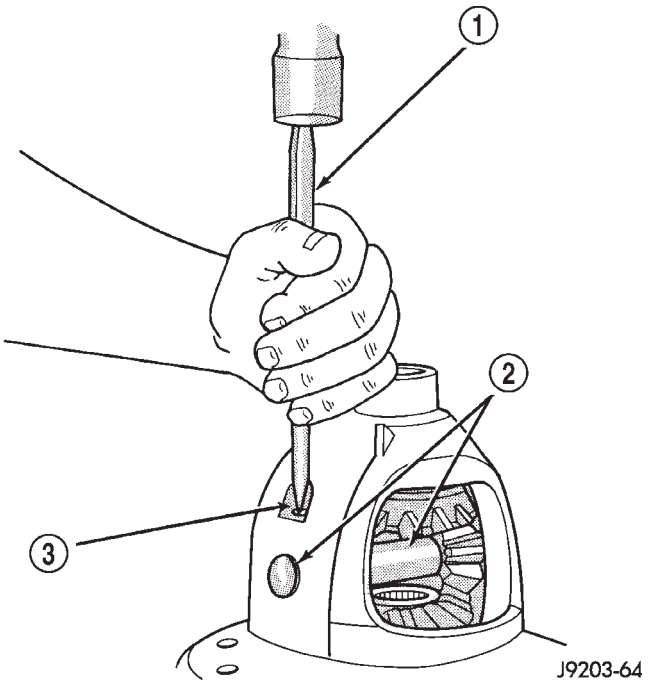

Fig. 45 Mate Shaft Roll Pin

1 - PUNCH
2 - PINION MATE SHAFT
3 - MATE SHAFT LOCKPIN

DIFFERENTIAL (Continued)

(1) Position Spreader W-129-B, utilizing some items from Adapter Kit 6987 with the tool dowel pins seated in the locating holes (Fig. 46). Install the hold-down clamps and tighten the tool turnbuckle finger-tight.

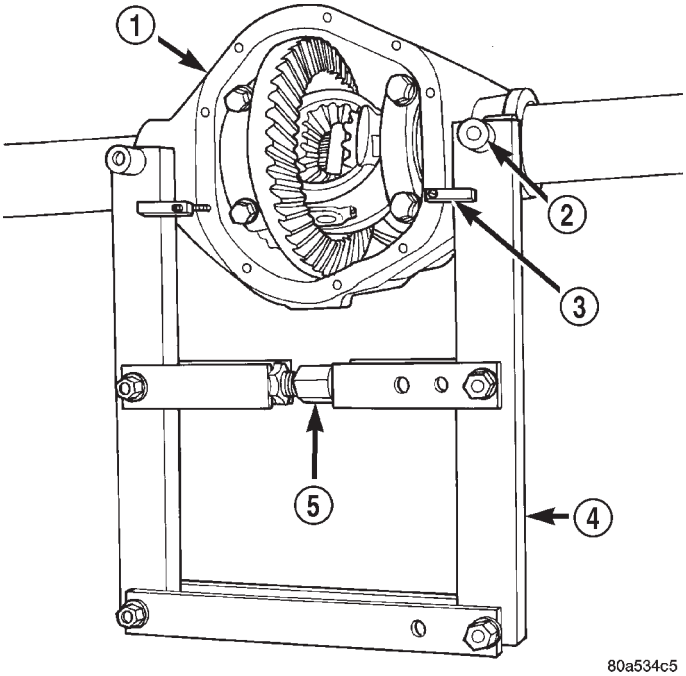

Fig. 46 Spreader Location

1 - DIFFERENTIAL HOUSING
2 - DOWEL
3 - SAFETY HOLD DOWN
4 - SPREADER
5 - TURNBUCKLE

(2) Install a Pilot Stud C-3288-B at the left side of the differential housing. Attach Dial Indicator C-3339 to pilot stud. Load the indicator plunger against the opposite side of the housing and zero the indicator.

CAUTION: Do not spread over 0.50 mm (0.020 in). If the housing is over-spread, it could be distorted or damaged.

(3) Spread the housing enough to install the case in the housing. Measure the distance with the dial indicator.

(4) Remove the dial indicator.

(5) Install differential case in the housing. Ensure that the differential bearing cups remain in position on the differential bearings and that the preload shims remain between the face of the bearing cup and housing. Tap the differential case to ensure the bearings cups and shims are fully seated in the housing.

NOTE: When installing a Vari-lok™ differential the oil feed tube must be pointed to the bottom of the housing. If differential is installed with the oil feed tube pointed toward the top, the anti-rotation tabs will be damaged.

(6) Install the bearing caps at their original locations (Fig. 47).

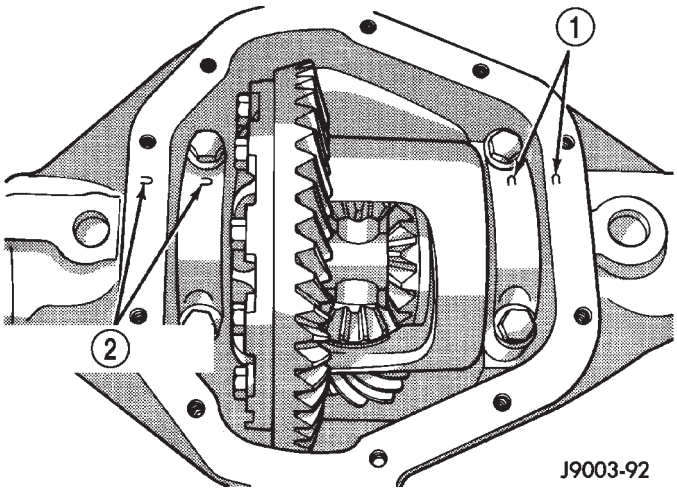

Fig. 47 Bearing Cap Reference

1 - REFERENCE LETTERS
2 - REFERENCE LETTERS

(7) Loosely install differential bearing cap bolts.

(8) Remove axle housing spreader.

(9) Tighten the bearing cap bolts to 61 N·m (45 ft. lbs.).

(10) Install the hub bearings and axle shafts.

(11) Apply a bead 6.35mm (1/4 inch) of Mopar Silicone Rubber Sealant or equivalent to the housing cover (Fig. 48).

Install the housing cover within 5 minutes after applying the sealant.

(12) Install the cover and any identification tag. Tighten the cover bolts in a criss-cross pattern to 41 N·m (30 ft. lbs.).

(13) Fill differential with Mopar Hypoid Gear Lubricant or equivalent to bottom of the fill plug hole. Refer to Lubricant Specifications for quantity and type.

(14) Tighten fill plug to 34 N·m (25 ft. lbs.).

(15) Remove support and lower the vehicle.

DIFFERENTIAL CASE BEARINGS

REMOVAL

(1) Remove differential case from axle housing.

DIFFERENTIAL CASE BEARINGS (Continued)

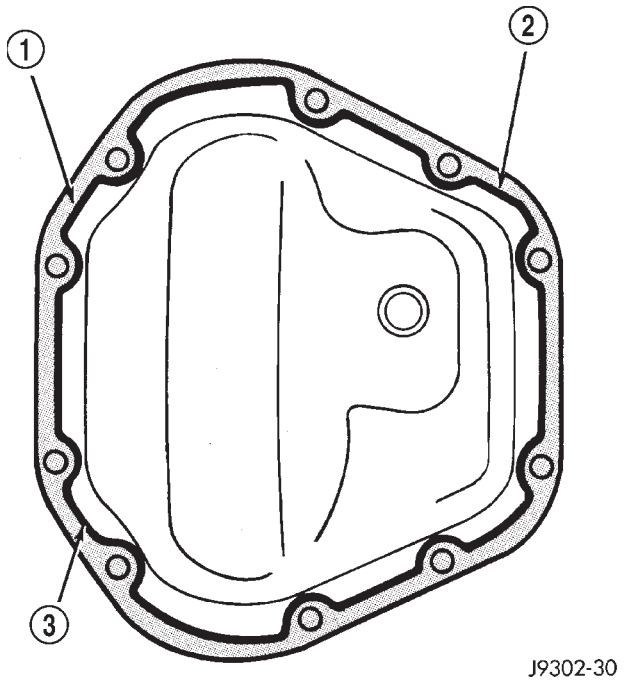

Fig. 48 Differential Cover

1 - COVER
2 - SEALANT
3 - SEALANT BEAD

(2) Remove bearings from the differential case with Puller/Press C-293-PA, Adapters 8352 and Plug SP-3289 (Fig. 49).

INSTALLATION

NOTE: If replacement differential side bearings or differential case are being installed, differential side bearing shim requirements may change. Refer to Adjustments (Differential Bearing Preload and Gear Backlash) to determine the proper shim selection.

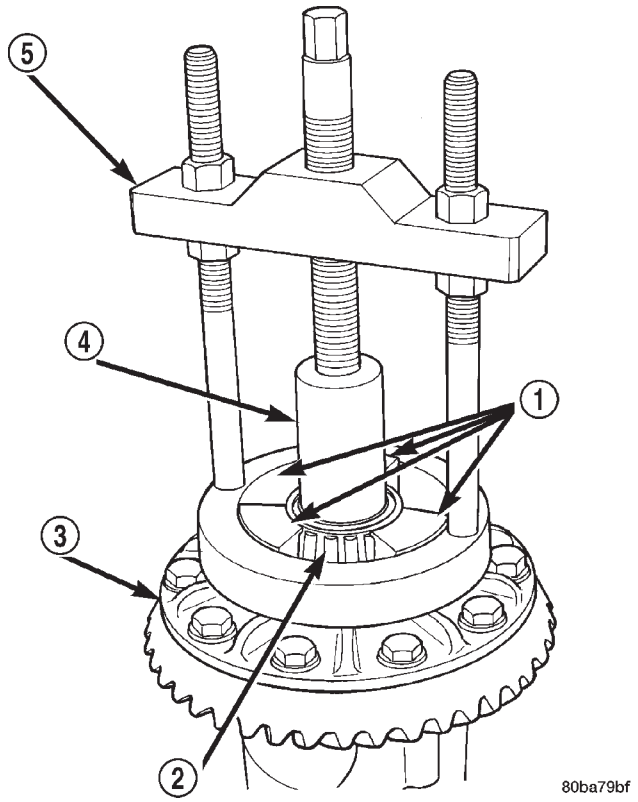

Fig. 49 Differential Bearings

1 - ADAPTERS - 8352
2 - BEARING
3 - DIFFERENTIAL
4 - PLUG - SP-3289
5 - PULLER - C-293-PA

CAUTION: Be sure that the Vari-lok™ plenum is fully seated against the differential case prior to installing the ring gear side differential bearing.

(1) Install differential side bearings with Installer C-3716-A and Handle C-4171 (Fig. 50).

(2) Install differential in axle housing.

PINION GEAR/RING GEAR (Continued)

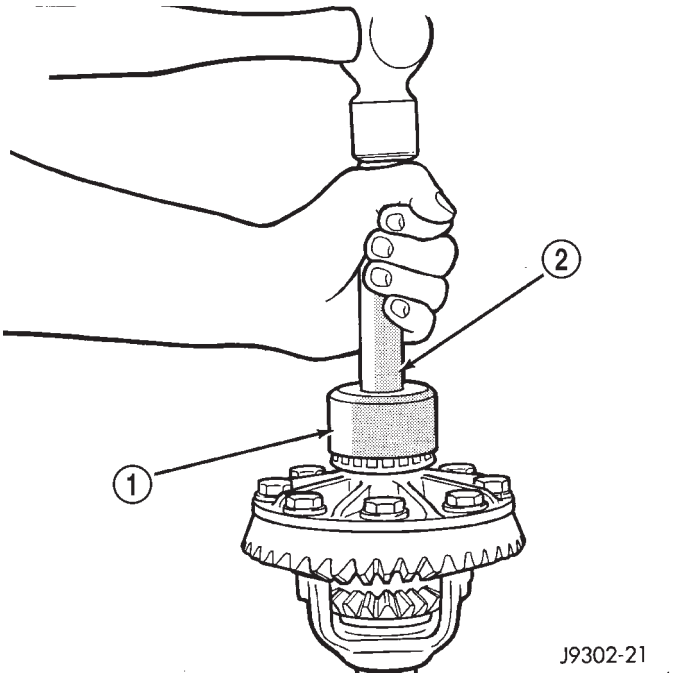

Fig. 50 Differential Side Bearing

1 - INSTALLER - C-3716-A
2 - HANDLE - C-4171

PINION GEAR/RING GEAR

REMOVAL

NOTE: The ring gear and pinion are serviced as a matched set. Nevar replace one gear without replacing the other.

(1) Raise and support vehicle
(2) Mark pinion companion flange and propeller shaft for installation alignment.
(3) Remove propeller shaft from pinion companion flange and tie propeller shaft to underbody.
(4) Remove differential from axle housing.
(5) Place differential case in a vise with soft metal jaw (Fig. 51).
(6) Remove bolts holding ring gear to differential case.

NOTE: On Veri-Lok differential the side bearing and oil feed plenum must be removed before removing the ring gear bolts.

(7) Driver ring gear off the differential case with a rawhide hammer (Fig. 51).
(8) Using Spanner Wrench 6958 to hold pinion companion flange, and a short length of 1 in. pipe, remove the pinion nut and washer (Fig. 52).

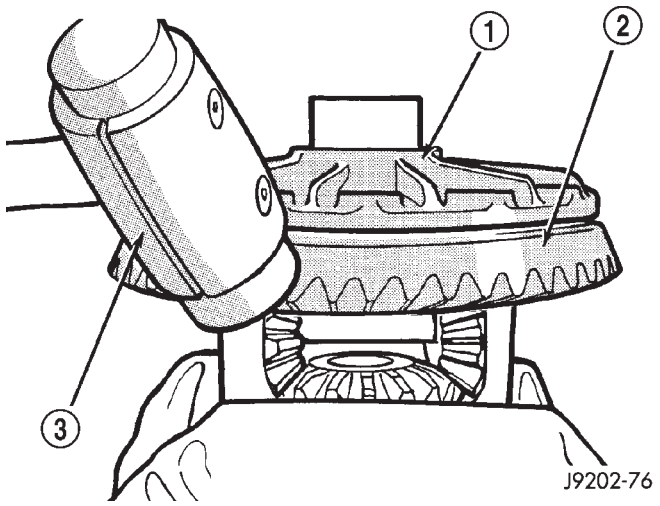

Fig. 51 Ring Gear

1 - CASE
2 - RING GEAR
3 - RAWHIDE HAMMER

(9) Remove the pinion companion flange from pinion shaft with Remover C-452 and Flange Wrench C-3281.

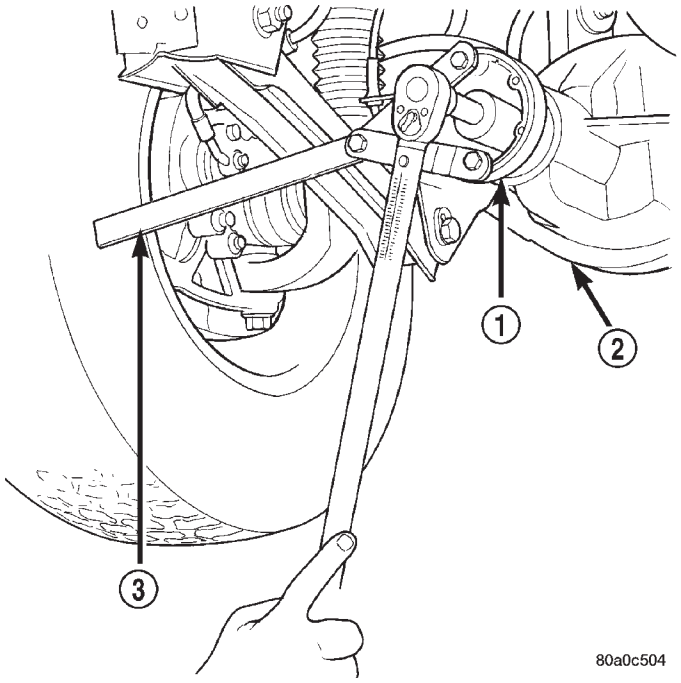

Fig. 52 Pinion Nut

1 - PINION FLANGE
2 - FRONT AXLE
3 - SPANNER WRENCH - 6958

(10) Remove the pinion gear and collapsible spacer from housing (Fig. 53).

PINION GEAR/RING GEAR (Continued)

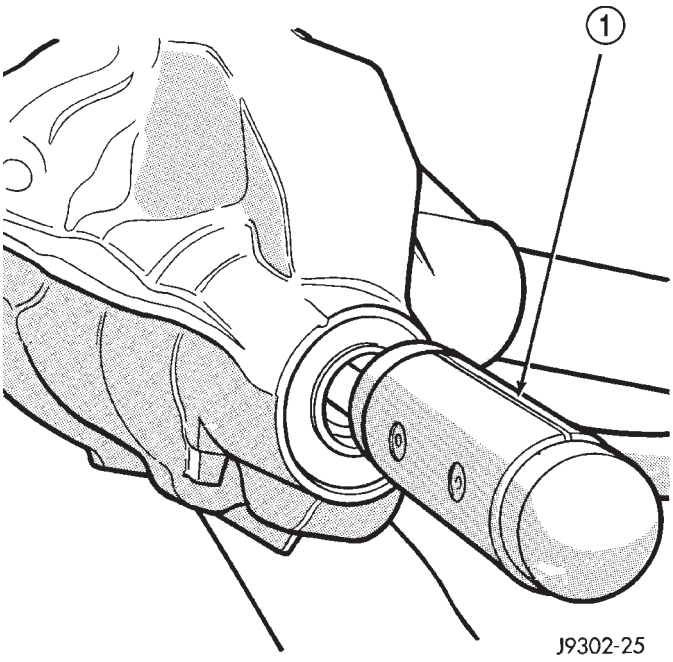

Fig. 53 Pinion Gear

1 - RAWHIDE HAMMER

(11) Remove front pinion bearing cup, bearing, oil slinger and pinion seal with Remover C-4345 and Handle C-4171 (Fig. 54).

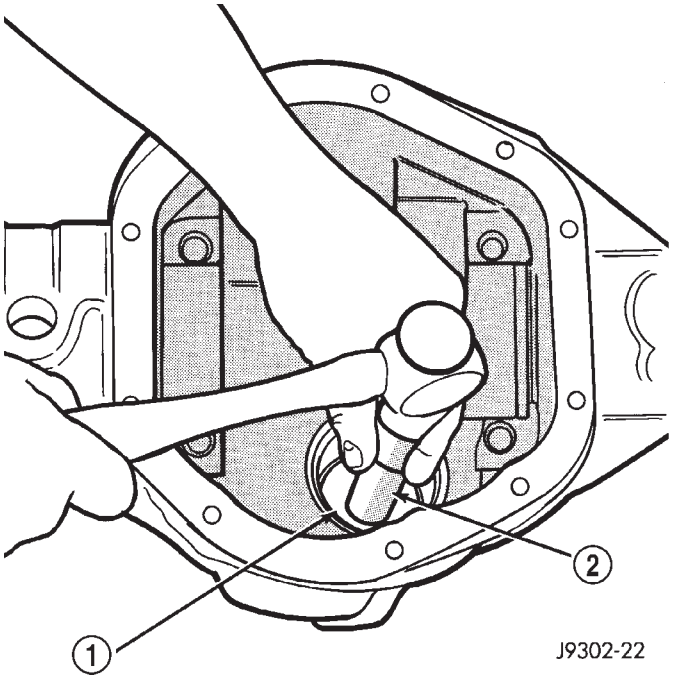

Fig. 54 Front Pinion Bearing Cup

1 - REMOVER - D-103
2 - HANDLE - C-4171

(12) Remove rear pinion bearing cup from axle housing (Fig. 55) with Remover D-149 and Handle C-4171.

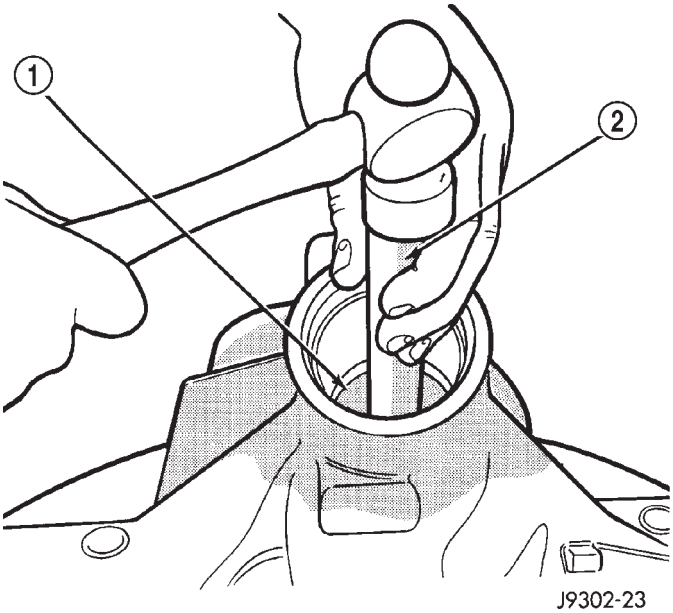

Fig. 55 Rear Pinion Bearing Cup

1 - DRIVER - C-4307
2 - HANDLE - C-4171

(13) Remove collapsible preload spacer from pinion gear (Fig. 56).

(14) Remove rear pinion bearing from the pinion with Puller/Press C-293-PA and Adapters C-293-39 (Fig. 57). Remove oil slinger/pinion depth shim from the pinion shaft and record thickness.

INSTALLATION

NOTE: Pinion depth shims are placed between the rear pinion bearing cone and the pinion head to achieve proper ring and pinion gear mesh. If ring and pinion gears are reused, the pinion oil slinger/ depth shim should not require replacement. Refer to Adujstments (Pinion Gear Depth) to select the proper thickness shim before installing pinion gear.

(1) Apply Mopar Door Ease or equivalent lubricant to outside surface of rear pinion bearing cup. Install bearing cup with Installer D-146 and Handle C-4171 (Fig. 58). Verify cup is seated.

(2) Apply Mopar Door Ease, or equivalent lubricant to outside surface of front pinion bearing cup. Install bearing cup with Installer D-130 and Handle C-4171 (Fig. 59). Verify cup is seated.

(3) Install front pinion bearing, and oil slinger if equipped.

PINION GEAR/RING GEAR (Continued)

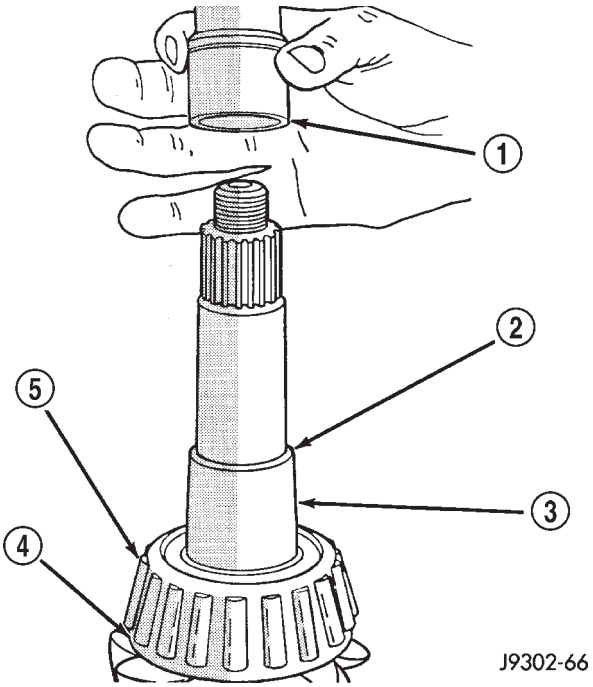

Fig. 56 Collapsible

1 - COLLAPSIBLE SPACER
2 - SHOULDER
3 - PINION GEAR
4 - OIL SLINGER
5 - REAR BEARING

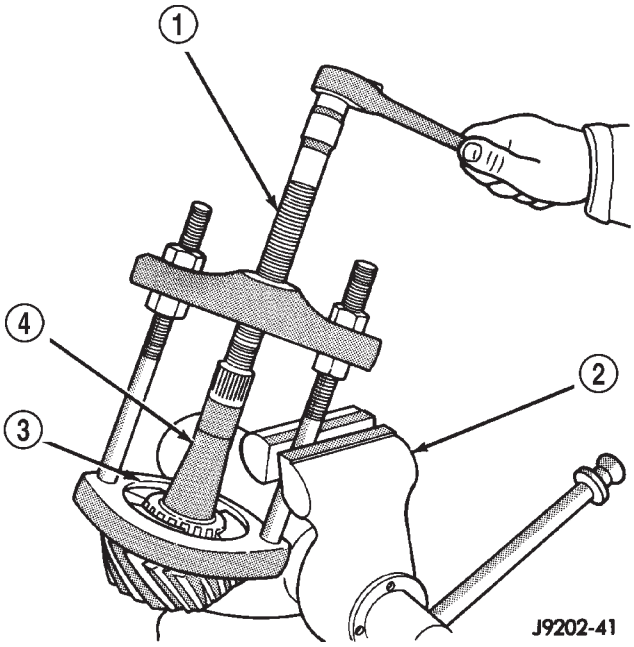

Fig. 57 Rear Pinion Bearing

1 - PULLER - C-293-PA
2 - VISE
3 - ADAPTERS - C-293-42
4 - PINION GEAR SHAFT

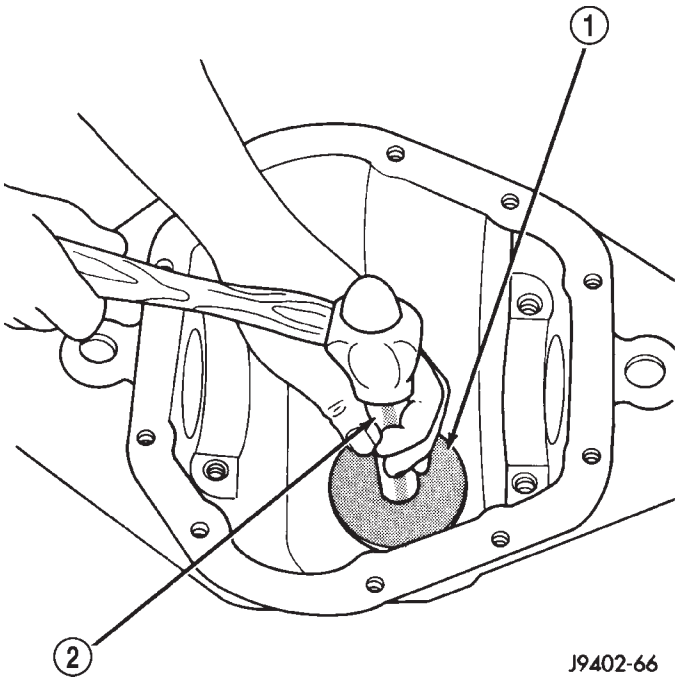

Fig. 58 Rear Pinion Bearing Cup

1 - INSTALLER
2 - HANDLE

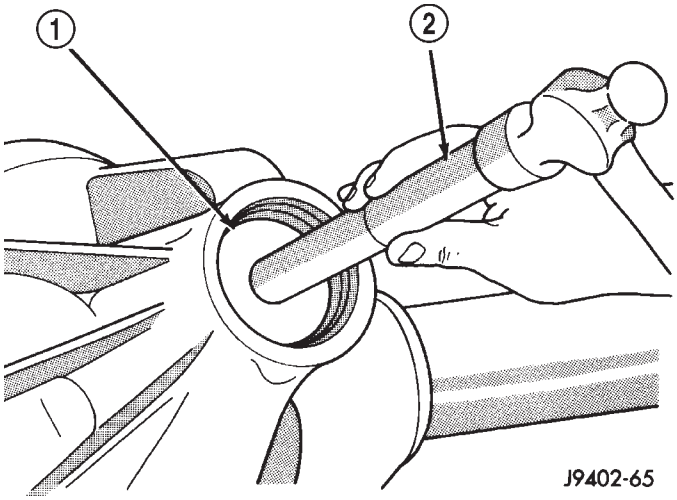

Fig. 59 Front Pinion Bearing Cup

1 - INSTALLER
2 - HANDLE

PINION GEAR/RING GEAR (Continued)

(4) Apply a light coating of gear lubricant on the lip of pinion seal and intall seal with Installer 8108 and Handle C-4171 (Fig. 60).

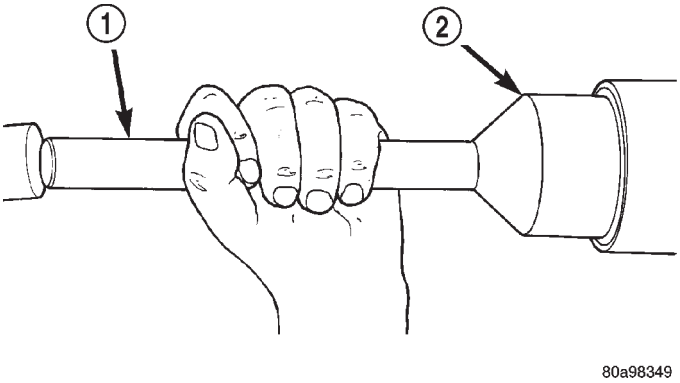

Fig. 60 Pinion Seal

1 - HANDLE - C-4171
2 - INSTALLER - 8108

(5) Install rear pinion bearing and oil slinger/depth shim onto the pinion shaft with Installer W-262 and a press (Fig. 61).

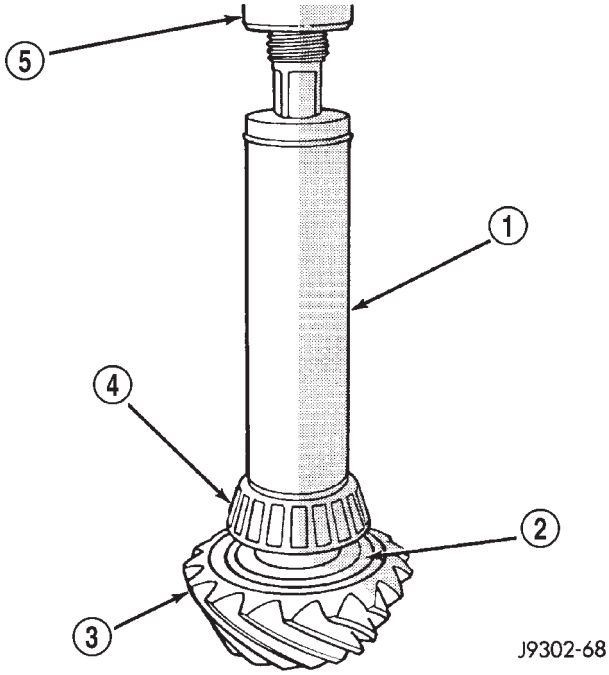

Fig. 61 Rear Pinion Bearing

1 - INSTALLER
2 - OIL SLINGER
3 - DRIVE PINION GEAR
4 - PINION REAR BEARING
5 - PRESS

(6) Install a **new** collapsible spacer on pinion shaft and install the pinion into the axle housing (Fig. 62).

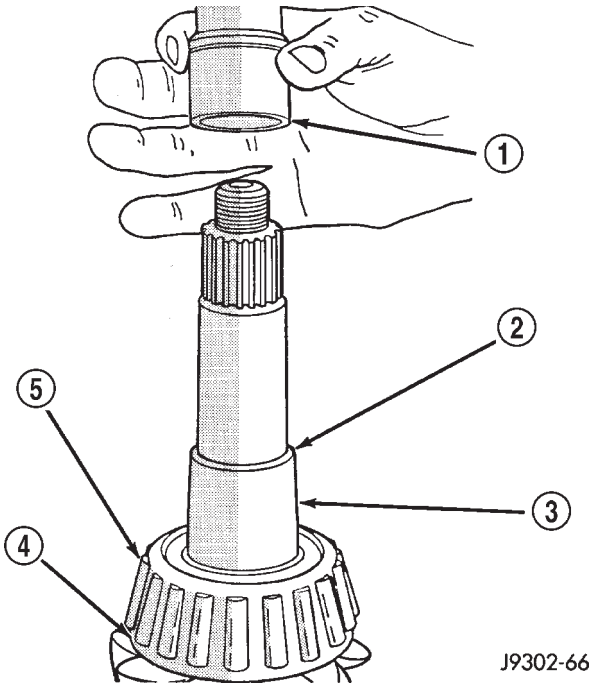

Fig. 62 Collapsible Preload Spacer

1 - COLLAPSIBLE SPACER
2 - SHOULDER
3 - PINION GEAR
4 - OIL SLINGER
5 - REAR BEARING

(7) Install pinion companion flange, with Installer W-162-B, Cup 8109 and Spanner Wrench 6958.

(8) Install pinion washer and a **new** nut onto the pinion gear and tighten the nut to 216 N·m (160 ft. lbs.). **Do not over–tighten.**

CAUTION: Never loosen pinion gear nut to decrease pinion gear bearing rotating torque and never exceed specified preload torque. If preload torque is exceeded a new collapsible spacer must be installed.

(9) Use Flange Wrench 6958, a length of 1 in. pipe and a torque wrench set at 678 N·m (500 ft. lbs.) and crush collapsible spacer until bearing end play is taken up (Fig. 63).

(10) Slowly tighten the nut in 6.8 N·m (5 ft. lb.) increments until the required rotating torque is achieved. Measure the rotating torque frequently to avoid over crushing the collapsible spacer (Fig. 64).

(11) Rotate the pinion a minimum of ten times. Verify pinion rotates smoothly and check rotating torque with an inch pound torque wrench (Fig. 64). Pinion gear rotating torque is:

- Original Bearings: 1 to 2.25 N·m (10 to 20 in. lbs.).
- New Bearings: 1.7 to 3.4 N·m (15 to 30 in. lbs.).

PINION GEAR/RING GEAR (Continued)

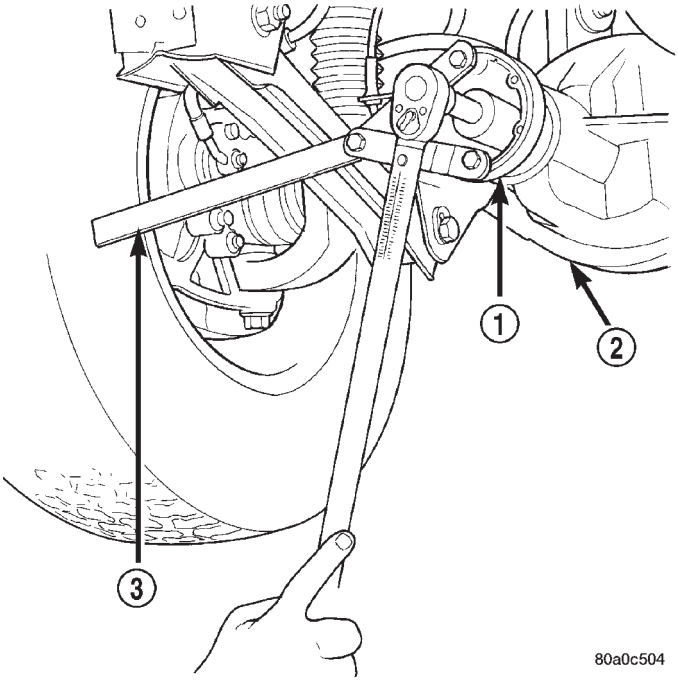

Fig. 63 Pinion Nut

1 - PINION FLANGE
2 - FRONT AXLE
3 - SPANNER WRENCH - 6958

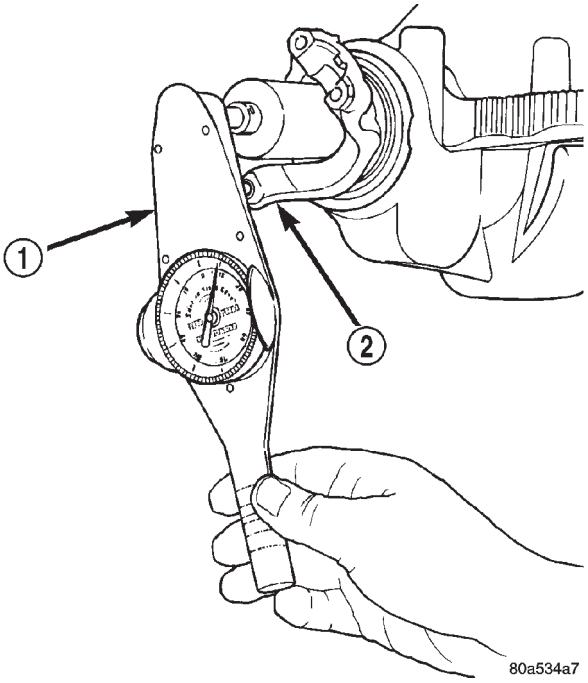

Fig. 64 Pinion Rotating Torque-Typical

1 - TORQUE WRENCH
2 - PINION YOKE

(12) Invert the differential case and start two ring gear bolts. This will provide case-to-ring gear bolt hole alignment.

(13) Invert the differential case in the vise.

(14) Install new ring gear bolts and alternately tighten to 108 N·m (80 ft. lbs.) (Fig. 65).

CAUTION: Do not reuse the bolts that held the ring gear to the differential case. The bolts can fracture causing extensive damage.

NOTE: If equipped with Veri-Lok differential install oil feed plenum and side bearing.

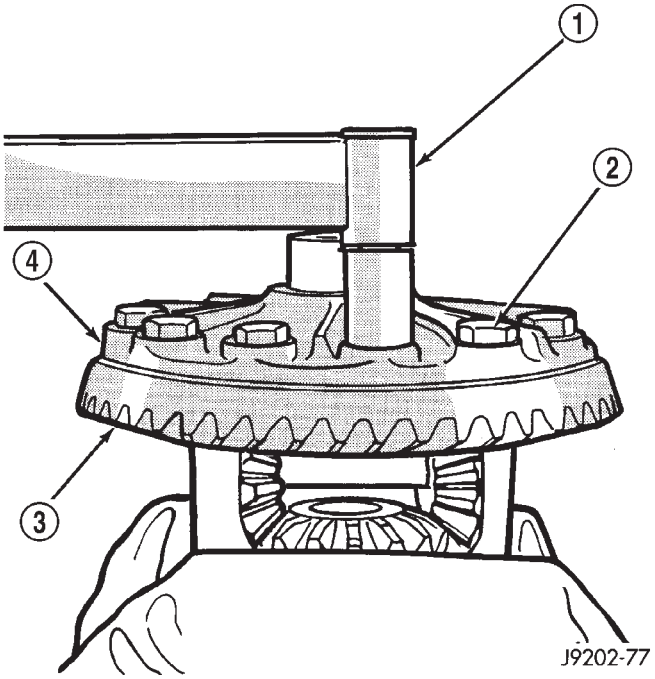

Fig. 65 Ring Gear Bolts

1 - TORQUE WRENCH
2 - RING GEAR BOLTS
3 - RING GEAR
4 - DIFFERENTIAL CASE

(15) Install differential in housing and verify differential bearing preload, gear mesh and contact pattern. Refer to Adjustment for procedure.

(16) Install differential cover and fill with gear lubricant.

(17) Install propeller shaft with reference marks aligned.

(18) Remove supports and lower vehicle.

REAR AXLE - 198RBI

TABLE OF CONTENTS

	page
REAR AXLE - 198RBI	
DESCRIPTION	49
OPERATION	49
DIAGNOSIS AND TESTING	50
AXLE	50
REMOVAL	54
INSTALLATION	55
ADJUSTMENTS	55
SPECIFICATIONS	64
SPECIAL TOOLS	64
AXLE SHAFTS	
REMOVAL	67
INSTALLATION	67
AXLE BEARINGS/SEALS	
REMOVAL	67
INSTALLATION	67
PINION SEAL	
REMOVAL	69
INSTALLATION	70
COLLAPSIBLE SPACER	
REMOVAL	71
INSTALLATION	72
DIFFERENTIAL	
REMOVAL	73
DISASSEMBLY	75
ASSEMBLY	75
INSTALLATION	75
DIFFERENTIAL - TRAC-LOC	
DIAGNOSIS AND TESTING	77
TRAC-LOK™	77
DISASSEMBLY	77
ASSEMBLY	79
DIFFERENTIAL CASE BEARINGS	
REMOVAL	81
INSTALLATION	81
PINION GEAR/RING GEAR	
REMOVAL	81
INSTALLATION	84

REAR AXLE - 198RBI

DESCRIPTION

The 198 Rear Beam-design Iron (RBI) axle housing has an iron center casting (differential housing) with axle shaft tubes extending from either side. The tubes are pressed into and welded to the differential housing to form a one-piece axle housing.

The integral type, hypoid gear design, housing has the centerline of the pinion set below the centerline of the ring gear.

The axle has a vent hose to relieve internal pressure caused by lubricant vaporization and internal expansion.

The axles are equipped with semi-floating axle shafts, meaning that loads are supported by the axle shaft and bearings. The axle shafts are retained by bearing retainer plates on the axles which are bolted to flanges at the outboard end of the axle tubes.

The cover provides a means for servicing the differential without removing the axle.

For vehicles equipped with ABS brakes, the axles have a tone ring pressed onto the axle shaft. Use care when removing axle shafts to ensure that the tone wheel or the wheel speed sensor are not damaged.

The axle has the assembly part number and gear ratio listed on a tag. The tag is attached to the differential housing by a cover bolt. Build date identification codes are stamped on the cover side of an axle shaft tube.

The differential case is a one-piece design. The differential pinion mate shaft is retained with a threaded pin. Differential bearing preload and ring gear backlash is adjusted by the use of selective spacer shims. Pinion bearing preload is set and maintained by the use of a collapsible spacer (Fig. 1).

Axles equipped with a Trac-Lok™ differential are optional. A Trac-Lok differential has a one-piece differential case, and the same internal components as a standard differential, plus two clutch disc packs.

OPERATION

The axle receives power from the transmission/transfer case through the rear propeller shaft. The rear propeller shaft is connected to the pinion gear which rotates the differential through the gear mesh with the ring gear bolted to the differential case. The engine power is transmitted to the axle shafts through the pinion mate and side gears. The side gears are splined to the axle shafts.

STANDARD DIFFERENTIAL

During straight-ahead driving, the differential pinion gears do not rotate on the pinion mate shaft. This occurs because input torque applied to the gears is divided and distributed equally between the two side

REAR AXLE - 198RBI (Continued)

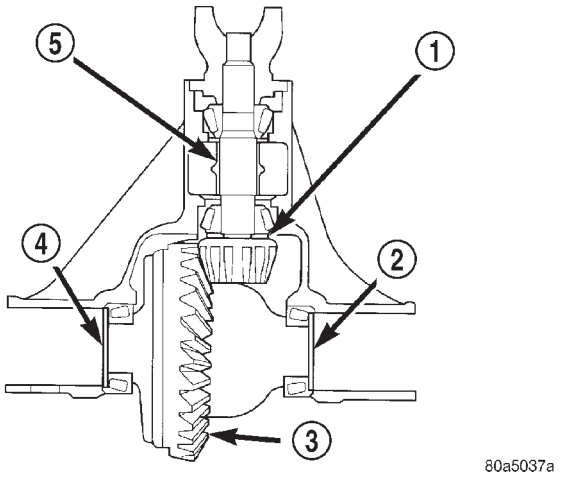

Fig. 1 Shim Locations

1 - PINION GEAR DEPTH SHIM
2 - DIFFERENTIAL BEARING SHIM
3 - RING GEAR
4 - DIFFERENTIAL BEARING SHIM
5 - COLLAPSIBLE SPACER

gears. As a result, the pinion gears revolve with the pinion mate shaft but do not rotate around it (Fig. 2).

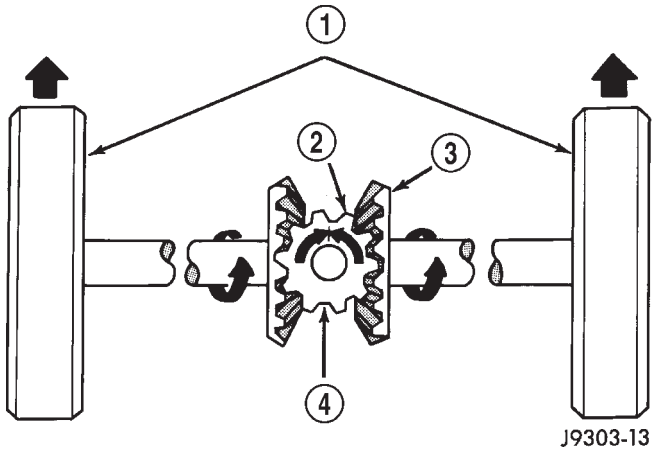

Fig. 2 Differential Operation - Straight Ahead Driving

1 - IN STRAIGHT AHEAD DRIVING EACH WHEEL ROTATES AT 100% OF CASE SPEED
2 - PINION GEAR
3 - SIDE GEAR
4 - PINION GEARS ROTATE WITH CASE

When turning corners, the outside wheel must travel a greater distance than the inside wheel to complete a turn. The difference must be compensated for to prevent the tires from scuffing and skidding through turns. To accomplish this, the differential allows the axle shafts to turn at unequal speeds (Fig. 3). In this instance, the input torque applied to the pinion gears is not divided equally. The pinion gears now rotate around the pinion mate shaft in opposite directions. This allows the side gear and axle shaft attached to the outside wheel to rotate at a faster speed.

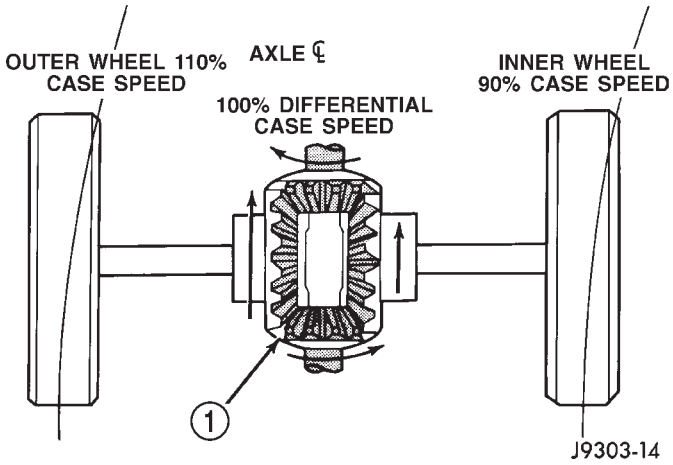

Fig. 3 Differential Operation - On Turns

1 - PINION GEARS ROTATE ON PINION SHAFT

TRAC-LOK™ DIFFERENTIAL

The Trac-lok™ clutches are engaged by two concurrent forces. The first being the preload force exerted through Belleville spring washers within the clutch packs. The second is the separating forces generated by the side gears as torque is applied through the ring gear (Fig. 4).

The Trac-lok™ design provides the differential action needed for turning corners and for driving straight ahead during periods of unequal traction. When one wheel looses traction, the clutch packs transfer additional torque to the wheel having the most traction. Trac-lok™ differentials resist wheel spin on bumpy roads and provide more pulling power when one wheel looses traction. Pulling power is provided continuously until both wheels loose traction. If both wheels slip due to unequal traction, Trac-lok™ operation is normal. In extreme cases of differences of traction, the wheel with the least traction may spin.

DIAGNOSIS AND TESTING - AXLE

GEAR NOISE

Axle gear noise can be caused by insufficient lubricant, incorrect backlash, tooth contact, worn/damaged gears, or the carrier housing not having the proper offset and squareness.

Gear noise usually happens at a specific speed range. The noise can also occur during a specific type of driving condition. These conditions are acceleration, deceleration, coast, or constant load.

When road testing, first warm-up the axle fluid by driving the vehicle at least 5 miles and then accelerate the vehicle to the speed range where the noise is

REAR AXLE - 198RBI (Continued)

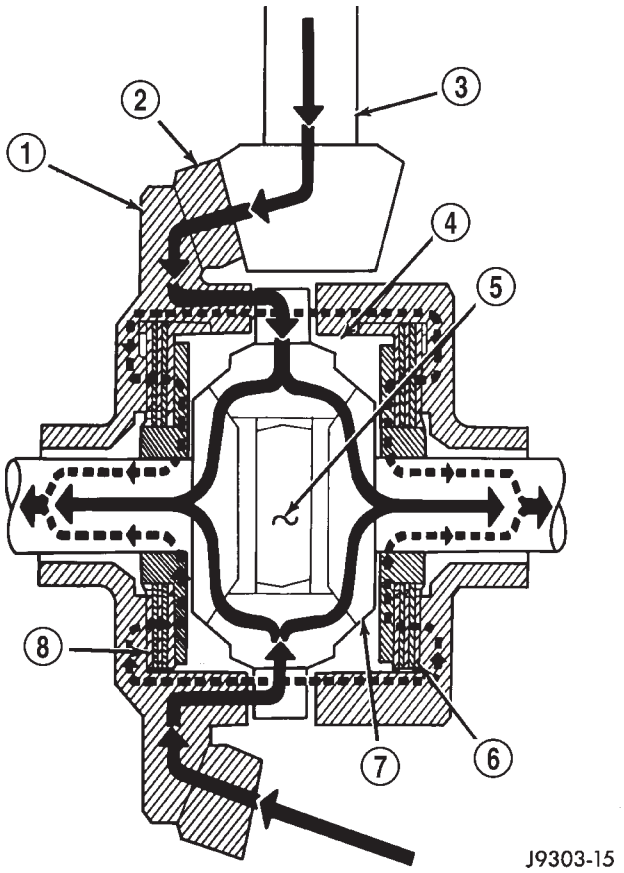

Fig. 4 Trac-lok™ Limited Slip Differential

1 - CASE
2 - RING GEAR
3 - DRIVE PINION
4 - PINION GEAR
5 - MATE SHAFT
6 - CLUTCH PACK
7 - SIDE GEAR
8 - CLUTCH PACK

the greatest. Shift out-of-gear and coast through the peak-noise range. If the noise stops or changes greatly:

- Check for insufficient lubricant.
- Incorrect ring gear backlash.
- Gear damage.

Differential side gears and pinions can be checked by turning the vehicle. They usually do not cause noise during straight-ahead driving when the gears are unloaded. The side gears are loaded during vehicle turns. A worn pinion mate shaft can also cause a snapping or a knocking noise.

BEARING NOISE

The axle shaft, differential and pinion bearings can all produce noise when worn or damaged. Bearing noise can be either a whining, or a growling sound.

Pinion bearings have a constant-pitch noise. This noise changes only with vehicle speed. Pinion bearing noise will be higher pitched because it rotates at a faster rate. Drive the vehicle and load the differential. If bearing noise occurs, the rear pinion bearing is the source of the noise. If the bearing noise is heard during a coast, the front pinion bearing is the source.

Worn or damaged differential bearings usually produce a low pitch noise. Differential bearing noise is similar to pinion bearing noise. The pitch of differential bearing noise is also constant and varies only with vehicle speed.

Axle shaft bearings produce noise and vibration when worn or damaged. The noise generally changes when the bearings are loaded. Road test the vehicle. Turn the vehicle sharply to the left and to the right. This will load the bearings and change the noise level. Where axle bearing damage is slight, the noise is usually not noticeable at speeds above 30 mph.

LOW SPEED KNOCK

Low speed knock is generally caused by a worn U-joint or by worn side–gear thrust washers. A worn pinion shaft bore will also cause low speed knock.

VIBRATION

Vibration at the rear of the vehicle is usually caused by a:

- Damaged drive shaft.
- Missing drive shaft balance weight(s).
- Worn or out-of-balance wheels.
- Loose wheel lug nuts.
- Worn U-joint(s).
- Loose/broken springs.
- Damaged axle shaft bearing(s).
- Loose pinion gear nut.
- Excessive pinion yoke run out.
- Bent axle shaft(s).

Check for loose or damaged front-end components or engine/transmission mounts. These components can contribute to what appears to be a rearend vibration. Do not overlook engine accessories, brackets and drive belts.

All driveline components should be examined before starting any repair.

(Refer to 22 - TIRES/WHEELS - DIAGNOSIS AND TESTING)

DRIVELINE SNAP

A snap or clunk noise when the vehicle is shifted into gear (or the clutch engaged), can be caused by:

- High engine idle speed.
- Transmission shift operation.
- Loose engine/transmission/transfer case mounts.
- Worn U-joints.
- Loose spring mounts.
- Loose pinion gear nut and yoke.

REAR AXLE - 198RBI (Continued)

- Excessive ring gear backlash.
- Excessive side gear to case clearance.

The source of a snap or a clunk noise can be determined with the assistance of a helper. Raise the vehicle on a hoist with the wheels free to rotate. Instruct the helper to shift the transmission into gear. Listen for the noise, a mechanics stethoscope is helpful in isolating the source of a noise.

DIAGNOSTIC CHART

Condition	Possible Causes	Correction
Wheel Noise	1. Wheel loose.	1. Tighten loose nuts.
	2. Faulty, brinelled wheel bearing.	2. Replace bearing.
Axle Shaft Noise	1. Misaligned axle tube.	1. Inspect axle tube alignment. Correct as necessary.
	2. Bent or sprung axle shaft.	2. Inspect and correct as necessary.
	3. End-play in pinion bearings.	3. Refer to pinion pre-load information and correct as necessary.
	4. Excessive gear backlash between the ring gear and pinion.	4. Check adjustment of the ring gear and pinion backlash. Correct as necessary.
	5. Improper adjustment of pinion gear bearings.	5. Adjust the pinion bearings pre-load.
	6. Loose pinion yoke nut.	6. Tighten the pinion yoke nut.
	7. Scuffed gear tooth contact surfaces.	7. Inspect and replace as necessary.
Axle Shaft Broke	1. Misaligned axle tube.	1. Replace the broken shaft after correcting tube mis-alignment.
	2 Vehicle overloaded.	2. Replace broken shaft and avoid excessive weight on vehicle.
	3. Erratic clutch operation.	3. Replace broken shaft and avoid or correct erratic clutch operation.
	4. Grabbing clutch.	4. Replace broken shaft and inspect and repair clutch as necessary.
Differential Cracked	1. Improper adjustment of the differential bearings.	1. Replace case and inspect gears and bearings for further damage. Set differential bearing pre-load properly.
	2. Excessive ring gear backlash.	2. Replace case and inspect gears and bearings for further damage. Set ring gear backlash properly.
	3. Vehicle overloaded.	3. Replace case and inspect gears and bearings for further damage. Avoid excessive vehicle weight.
	4. Erratic clutch operation.	4. Replace case and inspect gears and bearings for further damage. Avoid erratic use of clutch.

REAR AXLE - 198RBI (Continued)

Condition	Possible Causes	Correction
Differential Gears Scored	1. Insufficient lubrication.	1. Replace scored gears. Fill differential with the correct fluid type and quantity.
	2. Improper grade of lubricant.	2. Replace scored gears. Fill differential with the correct fluid type and quantity.
	3. Excessive spinning of one wheel/tire.	3. Replace scored gears. Inspect all gears, pinion bores, and shaft for damage. Service as necessary.
Loss Of Lubricant	1. Lubricant level too high.	1. Drain lubricant to the correct level.
	2. Worn axle shaft seals.	2. Replace seals.
	3. Cracked differential housing.	3. Repair as necessary.
	4. Worn pinion seal.	4. Replace seal.
	5. Worn/scored yoke.	5. Replace yoke and seal.
	6. Axle cover not properly sealed.	6. Remove, clean, and re-seal cover.
Axle Overheating	1. Lubricant level low.	1. Fill differential to correct level.
	2. Improper grade of lubricant.	2. Fill differential with the correct fluid type and quantity.
	3. Bearing pre-loads too high.	3. Re-adjust bearing pre-loads.
	4. Insufficient ring gear backlash.	4. Re-adjust ring gear backlash.
Gear Teeth Broke	1. Overloading.	1. Replace gears. Examine other gears and bearings for possible damage.
	2. Erratic clutch operation.	2. Replace gears and examine the remaining parts for damage. Avoid erratic clutch operation.
	3. Ice-spotted pavement.	3. Replace gears and examine remaining parts for damage.
	4. Improper adjustments.	4. Replace gears and examine remaining parts for damage. Ensure ring gear backlash is correct.

REAR AXLE - 198RBI (Continued)

Condition	Possible Causes	Correction
Axle Noise	1. Insufficient lubricant.	1. Fill differential with the correct fluid type and quantity.
	2. Improper ring gear and pinion adjustment.	2. Check ring gear and pinion contact pattern.
	3. Unmatched ring gear and pinion.	3. Replace gears with a matched ring gear and pinion.
	4. Worn teeth on ring gear and/or pinion.	4. Replace ring gear and pinion.
	5. Loose pinion bearings.	5. Adjust pinion bearing pre-load.
	6. Loose differential bearings.	6. Adjust differential bearing pre-load.
	7. Mis-aligned or sprung ring gear.	7. Measure ring gear run-out. Replace components as necessary.
	8. Loose differential bearing cap bolts.	8. Inspect differential components and replace as necessary. Ensure that the bearing caps are torqued tot he proper specification.
	9. Housing not machined properly.	9. Replace housing.

REMOVAL

(1) Raise and support the vehicle.

(2) Position a lifting device under the axle and secure axle.

(3) Remove the wheels and tires.

(4) Remove brake rotors (Refer to 5 - BRAKES/HYDRAULIC/MECHANICAL/ROTORS - REMOVAL) and calipers (Refer to 5 - BRAKES/HYDRAULIC/MECHANICAL/DISC BRAKE CALIPERS - REMOVAL) from the axle.

(5) Disconnect parking brake cables from brackets and lever.

(6) Remove wheel speed sensors. (Refer to 5 - BRAKES/ELECTRICAL/REAR WHEEL SPEED SENSOR - REMOVAL)

(7) Disconnect the brake hose at the axle junction block. Do not disconnect the brake hydraulic lines at the calipers.

(8) Disconnect the vent hose from the axle shaft tube.

(9) Mark propeller shaft and yokes for installation reference.

(10) Remove propeller shaft. (Refer to 3 - DIFFERENTIAL & DRIVELINE/PROPELLER SHAFT/PROPELLER SHAFT - REMOVAL)

(11) Disconnect stabilizer bar links.

(12) Remove nut holding upper suspension arm to the rear axle ball joint.

(13) Using Remover 8278, separate the rear axle ball joint from the upper suspension arm (Fig. 5).

(14) Disconnect shock absorbers from axle.

(15) Disconnect track bar.

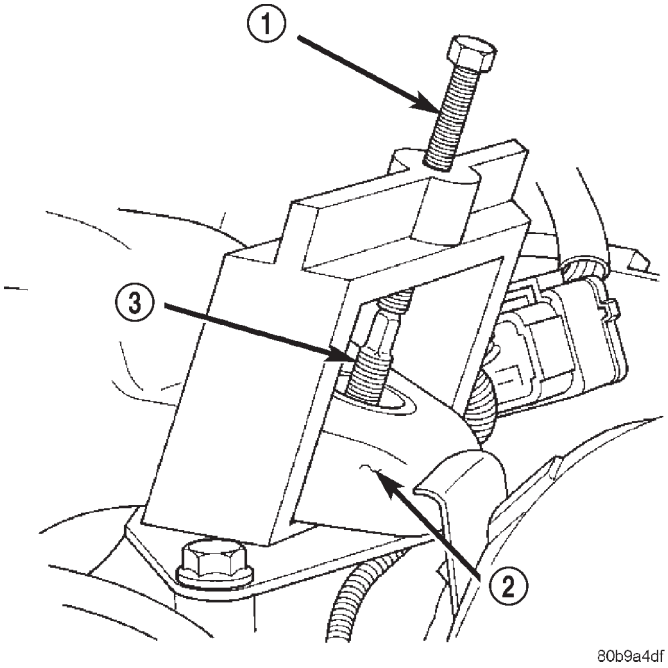

Fig. 5 Rear Ball Joint

1 - REMOVER - 8278
2 - UPPER SUSPENSION ARM
3 - BALL JOINT STUD

(16) Disconnect lower suspension arms from the axle brackets.

(17) Separate the axle from the vehicle.

REAR AXLE - 198RBI (Continued)

INSTALLATION

NOTE: The weight of the vehicle must be supported by the springs before suspension arms and track bar fasteners can be tightened. If the springs are not at their normal ride position, vehicle ride height and handling could be affected.

(1) Raise the axle with lifting device and align coil springs.

(2) Position the lower suspension arms on the axle brackets. Install nuts and bolts, do not tighten bolts at this time.

(3) Install the upper suspension arm to the rear axle ball joint.

(4) Install nut to hold the upper suspension arm to the rear axle ball joint. Torque the nut to 122 N·m (90 ft.lbs.) (Fig. 6).

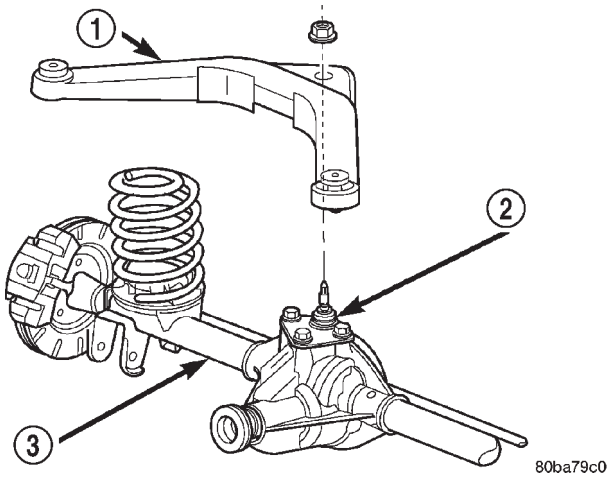

Fig. 6 Rear Suspention

1 - UPPER SUSPENSION ARM
2 - REAR AXLE BALL JOINT
3 - REAR AXLE

(5) Install track bar and attachment bolts, do not tighten bolts at this time.

(6) Install shock absorbers and tighten nuts to 60 N·m (44 ft. lbs.).

(7) Install stabilizer bar links and tighten nuts to 36 N·m (27 ft. lbs.).

(8) Install wheel speed sensors. (Refer to 5 - BRAKES/ELECTRICAL/REAR WHEEL SPEED SENSOR - INSTALLATION)

(9) Connect parking brake cable to brackets and lever.

(10) Install brake rotors (Refer to 5 - BRAKES/HYDRAULIC/MECHANICAL/ROTORS - INSTALLATION) and calipers. (Refer to 5 - BRAKES/HYDRAULIC/MECHANICAL/DISC BRAKE CALIPERS - INSTALLATION)

(11) Connect the brake hose to the axle junction block.

(12) Install axle vent hose.

(13) Align propeller shaft and pinion yoke reference marks. Install U-joint straps and bolts. Tighten to 19 N·m (14 ft. lbs.).

(14) Install the wheels and tires.

(15) Add gear lubricant, if necessary.

(16) Remove support and lower the vehicle.

(17) Tighten lower suspension arm bolts to 177 N·m (130 ft. lbs.).

(18) Tighten track bar bolts to 100 N·m (74 ft. lbs.).

ADJUSTMENTS

PINION GEAR DEPTH

Ring and pinion gears are supplied as matched sets only. The identifying numbers for the ring and pinion gear are etched into the face of each gear (Fig. 7). A plus (+) number, minus (–) number or zero (0) is etched into the face of the pinion gear. This number is the amount (in thousandths of an inch) the depth varies from the standard depth setting of a pinion etched with a (0). The standard setting from the center line of the ring gear to the back face of the pinion is 96.850 mm (3.813 in.). The standard depth provides the best gear tooth contact pattern. Refer to Backlash and Contact Pattern Analysis paragraph in this section for additional information.

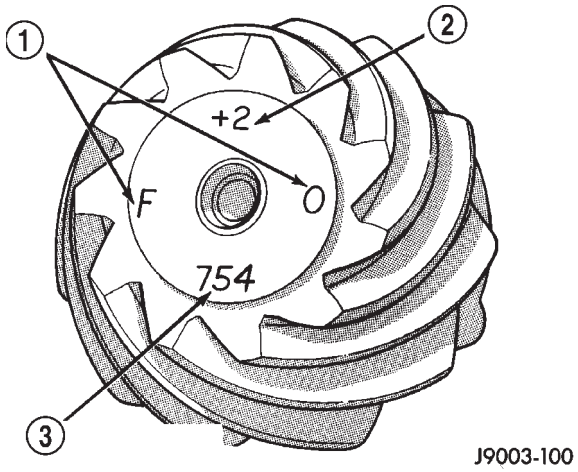

Fig. 7 Pinion Gear ID Numbers

1 - PRODUCTION NUMBERS
2 - PINION GEAR DEPTH VARIANCE
3 - GEAR MATCHING NUMBER)

REAR AXLE - 198RBI (Continued)

Compensation for pinion depth variance is achieved with a select shim/oil baffle. The shims are placed between the rear pinion bearing and the pinion gear head (Fig. 8).

If a new gear set is being installed, note the depth variance etched into both the original and replacement pinion. Add or subtract this number from the thickness of the original depth shim/oil slinger to compensate for the difference in the depth variances. Refer to the Pinion Gear Depth Variance chart.

Note where Old and New Pinion Marking columns intersect. Intersecting figure represents plus or minus the amount needed.

Note the etched number on the face of the pinion gear head (–1, –2, 0, +1, +2, etc.). The numbers represent thousands of an inch deviation from the standard. If the number is negative, add that value to the required thickness of the depth shims. If the number is positive, subtract that value from the thickness of the depth shim. If the number is 0 no change is necessary.

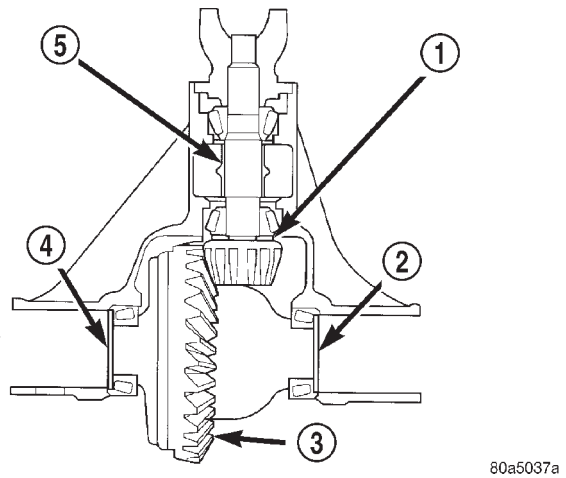

Fig. 8 Adjustment Shim Locations

1 - PINION GEAR DEPTH SHIM/OIL BAFFLE
2 - DIFFERENTIAL BEARING SHIM
3 - RING GEAR
4 - DIFFERENTIAL BEARING SHIM
5 - COLLAPSIBLE SPACER

PINION GEAR DEPTH VARIANCE

Original Pinion Gear Depth Variance	Replacement Pinion Gear Depth Variance									
	−4	−3	−2	−1	0	+1	+2	+3	+4	
+4		+0.008	+0.007	+0.006	+0.005	+0.004	+0.003	+0.002	+0.001	0
+3		+0.007	+0.006	+0.005	+0.004	+0.003	+0.002	+0.001	0	−0.001
+2		+0.006	+0.005	+0.004	+0.003	+0.002	+0.001	0	−0.001	−0.002
+1		+0.005	+0.004	+0.003	+0.002	+0.001	0	−0.001	−0.002	−0.003
0		+0.004	+0.003	+0.002	+0.001	0	−0.001	−0.002	−0.003	−0.004
−1		+0.003	+0.002	+0.001	0	−0.001	−0.002	−0.003	−0.004	−0.005
−2		+0.002	+0.001	0	−0.001	−0.002	−0.003	−0.004	−0.005	−0.006
−3		+0.001	0	−0.001	−0.002	−0.003	−0.004	−0.005	−0.006	−0.007
−4		0	−0.001	−0.002	−0.003	−0.004	−0.005	−0.006	−0.007	−0.008

PINION DEPTH MEASUREMENT

Measurements are taken with pinion bearing cups and pinion bearings installed in the housing. Take measurements with Pinion Gauge Set and Dial Indicator C-3339 (Fig. 9).

(1) Assemble Pinion Height Block 6739, Pinion Block 6735 and rear pinion bearing onto Screw 6741 (Fig. 9).

(2) Insert assembled height gauge components, rear bearing and screw into the housing through pinion bearing cups (Fig. 10).

(3) Install front pinion bearing and Cone-nut 6740 hand tight (Fig. 9).

(4) Place Arbor Disc 6732 on Arbor D-115-3 in position in the housing side bearing cradles (Fig. 11). Install differential bearing caps on Arbor Discs and tighten cap bolts to 41 N·m (30 ft. lbs.).

NOTE: Arbor Discs 6732 has different step diameters to fit other axles. Choose proper step for axle being serviced.

REAR AXLE - 198RBI (Continued)

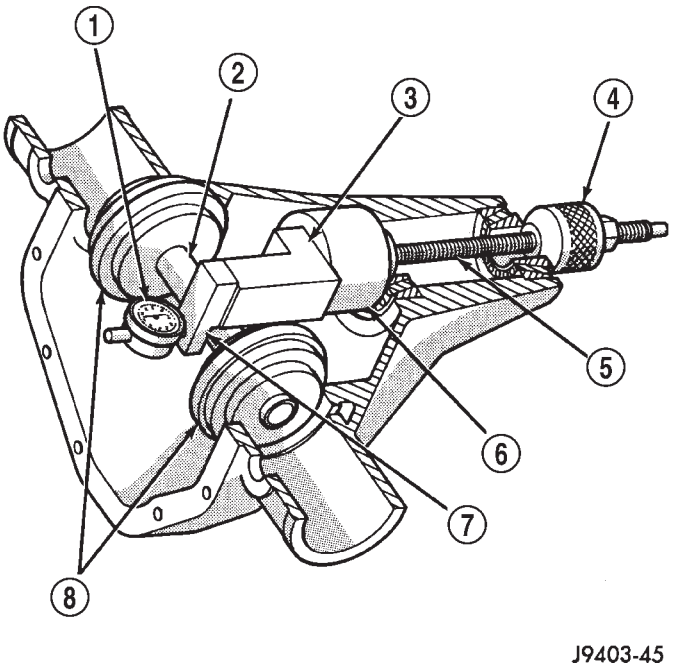

Fig. 9 Pinion Gear Depth Gauge Tools

1 - DIAL INDICATOR - C-3339
2 - ARBOR - D-115-3
3 - PINION HEIGHT BLOCK - 6739
4 - CONE - 6740
5 - SCREW - 6741
6 - PINION BLOCK - 6735
7 - SCOOTER BLOCK - D-115-2
8 - ARBOR DISC - 6732

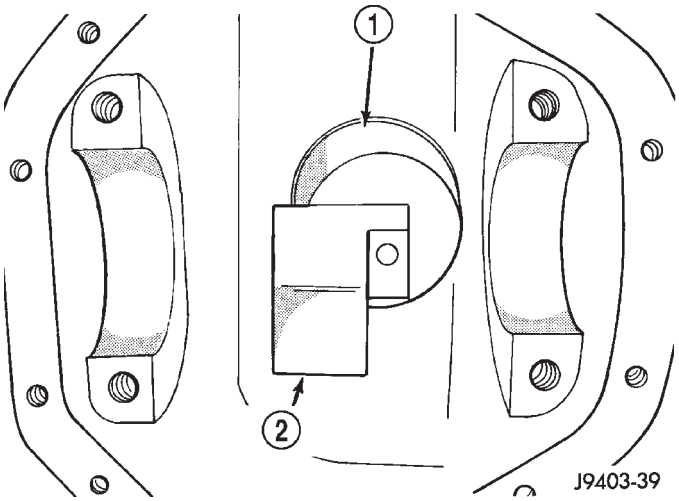

Fig. 10 Pinion Height Block

1 - PINION BLOCK - 6735
2 - PINION HEIGHT BLOCK - 6739

(5) Assemble Dial Indicator C-3339 into Scooter Block D-115-2 and secure set screw.

(6) Place Scooter Block/Dial Indicator in position in the housing so dial probe and scooter block are flush against the rearward surface of the pinion height block (Fig. 9). Hold scooter block in place and zero the dial indicator face to the pointer. Tighten dial indicator face lock screw.

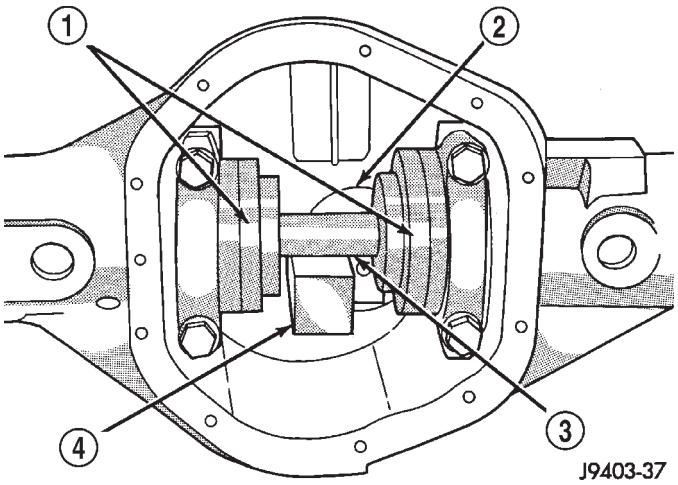

Fig. 11 Gauge Tools In Housing

1 - ARBOR DISC - 6732
2 - PINION BLOCK - 6735
3 - ARBOR - D-115-3
4 - PINION HEIGHT BLOCK - 6739

(7) With scooter block still in position against the pinion height block, slowly slide the dial indicator probe over the edge of the pinion height block.

(8) Slide the dial indicator probe across the gap between the pinion height block and the arbor bar with the scooter block against the pinion height block (Fig. 12). When the dial probe contacts the arbor bar, the dial pointer will turn clockwise. Bring dial pointer back to zero against the arbor bar, do not turn dial face. Continue moving the dial probe to the crest of the arbor bar and record the highest reading. If the dial indicator can not achieve the zero reading, the rear bearing cup or the pinion depth gauge set is not installed correctly.

(9) Select a shim/oil baffle equal to the dial indicator reading plus the pinion depth variance number etched in the face of the pinion (Fig. 7). For example, if the depth variance is –2, add +0.002 in. to the dial indicator reading.

DIFFERENTIAL

Differential side bearing preload and gear backlash is achieved by selective shims positioned behind the differential side bearing cones. The proper shim thickness can be determined using slip-fit Dummy Bearings D-348 in place of the differential side bearings and a Dial Indicator C-3339. Before proceeding with the differential bearing preload and gear backlash measurements, measure the pinion gear depth and prepare the pinion for installation. Establishing

REAR AXLE - 198RBI (Continued)

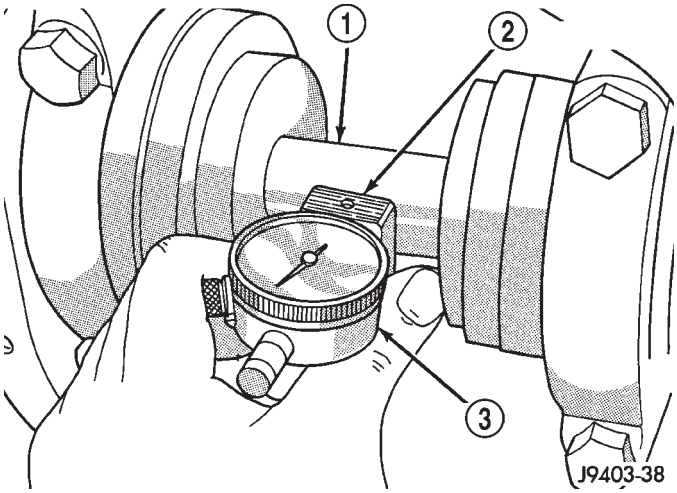

Fig. 12 Pinion Gear Depth Measurement

1 - ARBOR - 6732
2 - SCOOTER BLOCK - D-115-2
3 - DIAL INDICATOR - C-3339

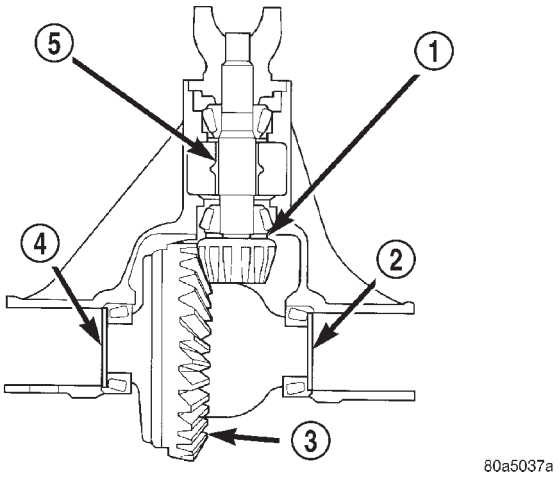

Fig. 13 Adjustment Shim Locations

1 - PINION GEAR DEPTH SHIM/OIL BAFFLE
2 - DIFFERENTIAL BEARING SHIM
3 - RING GEAR
4 - DIFFERENTIAL BEARING SHIM
5 - COLLAPSIBLE SPACER

proper pinion gear depth is essential to establishing gear backlash and tooth contact patterns. After the overall shim thickness to take up differential side play is measured, the pinion is installed, and the gear backlash shim thickness is measured. The overall shim thickness is the total of the dial indicator reading and the preload specification added together. The gear backlash measurement determines the thickness of the shim used on the ring gear side of the differential case. Subtract the gear backlash shim thickness from the total overall shim thickness and select that amount for the pinion gear side of the differential (Fig. 13). Differential shim measurements are performed with the spreader W-129-B removed.

PRELOAD SHIM SELECTION

NOTE: It is difficult to salvage the differential side bearings during the removal procedure. Install replacement bearings if necessary.

(1) Remove differential side bearings from differential case.

(2) Install ring gear on differential case and tighten bolts to specification.

(3) Install Dummy Bearings D-348 on differential case.

(4) Install differential case in the housing.

(5) Record the thickness of Dummy Shims 8107. Insert the shims between the dummy bearings and the differential housing (Fig. 14).

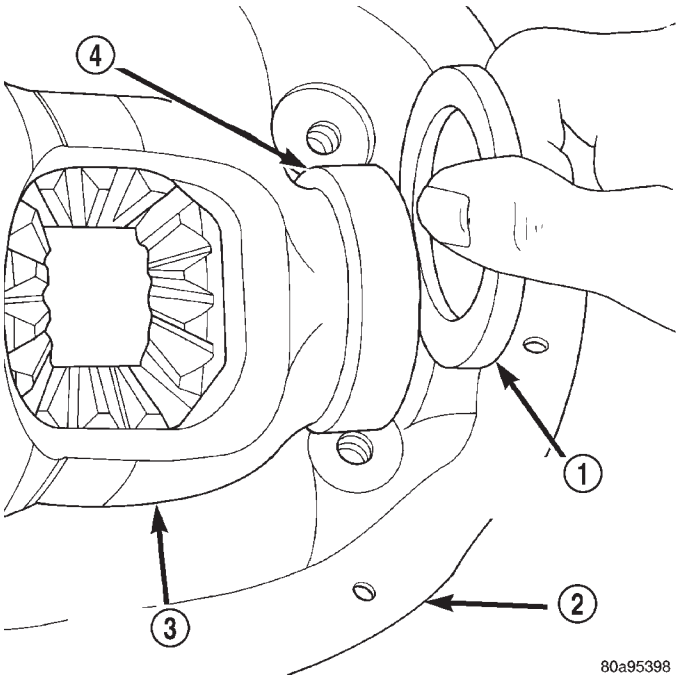

Fig. 14 SHIM POINT

1 - DUMMY SHIM - 8107
2 - AXLE HOUSING
3 - DIFFERENTIAL CASE
4 - DUMMY BEARINGS - D-348

REAR AXLE - 198RBI (Continued)

(6) Install the marked bearing caps in their correct positions. Install and snug the bolts (Fig. 15).

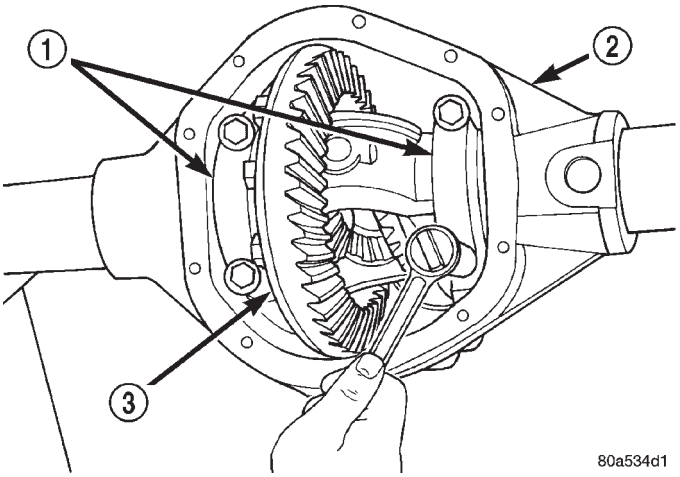

Fig. 15 Tighten Bolts Holding

1 - BEARING CAP
2 - AXLE HOUSING
3 - DIFFERENTIAL CASE

(7) Using a dead-blow type hammer seat the differential dummy bearings to each side of the housing (Fig. 16) and (Fig. 17).

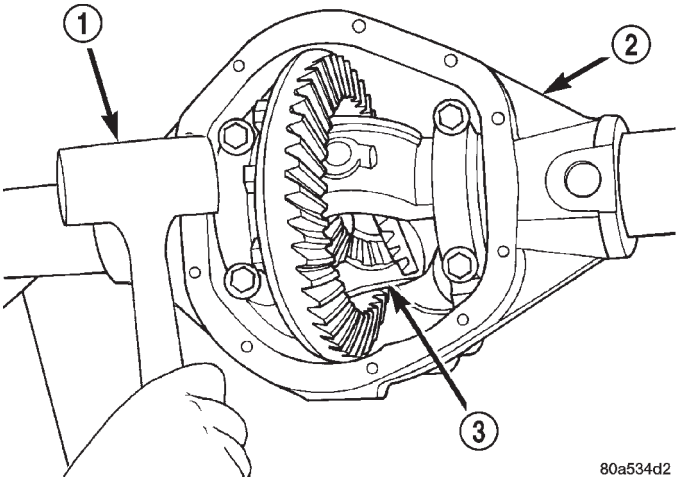

Fig. 16 Seat Dummy Side Bearing

1 - MALLET
2 - AXLE HOUSING
3 - DIFFERENTIAL CASE

(8) Thread Pilot Stud C-3288-B into rear cover bolt hole below ring gear (Fig. 18).

(9) Attach a Dial Indicator C-3339 to pilot stud. Position the dial indicator plunger on a flat surface between the ring gear bolt heads (Fig. 18).

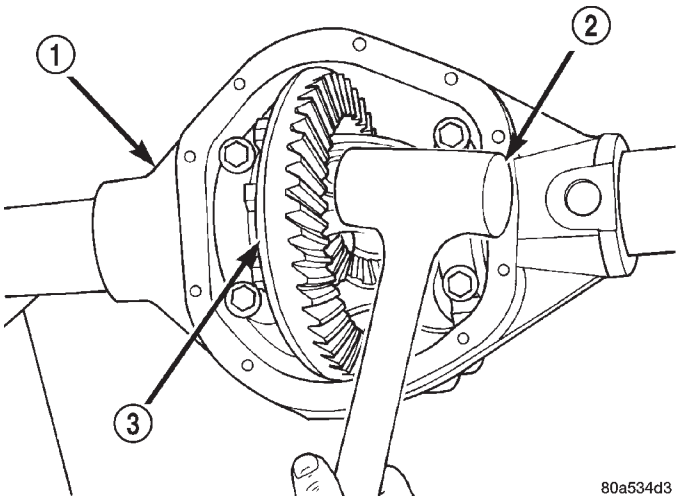

Fig. 17 Seat Dummy Side Bearing

1 - AXLE HOUSING
2 - MALLET
3 - DIFFERENTIAL CASE

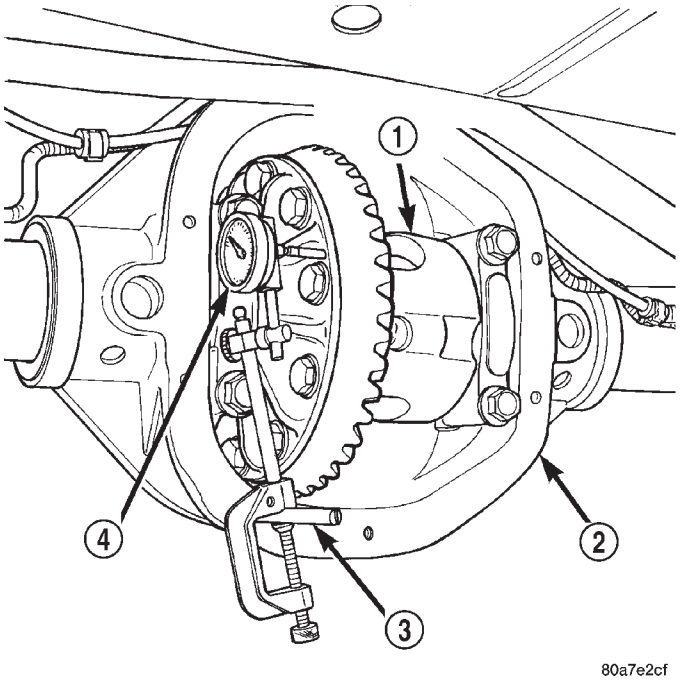

Fig. 18 Differential Side play Measurement

1 - DIFFERENTIAL CASE
2 - AXLE HOUSING
3 - SPECIAL TOOL - C-3288-B
4 - SPECIAL TOOL - C-3339

(10) Push and hold differential case to pinion gear side of the housing and zero dial indicator (Fig. 19).

REAR AXLE - 198RBI (Continued)

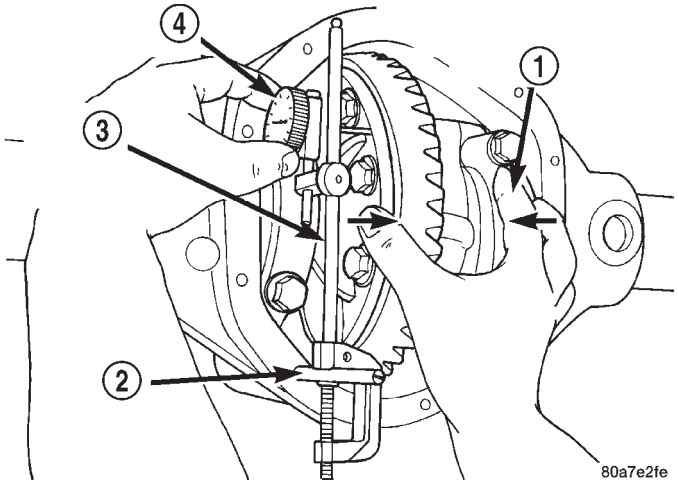

Fig. 19 Zero Dial Indicator

1 - FORCE DIFFERENTIAL CASE TO PINION GEAR SIDE
2 - SPECIAL TOOL - C-3288-B
3 - SPECIAL TOOL - C-3339
4 - ZERO DIAL INDICATOR FACE

(11) Push and hold differential case to ring gear side of the housing and record dial indicator reading (Fig. 20).

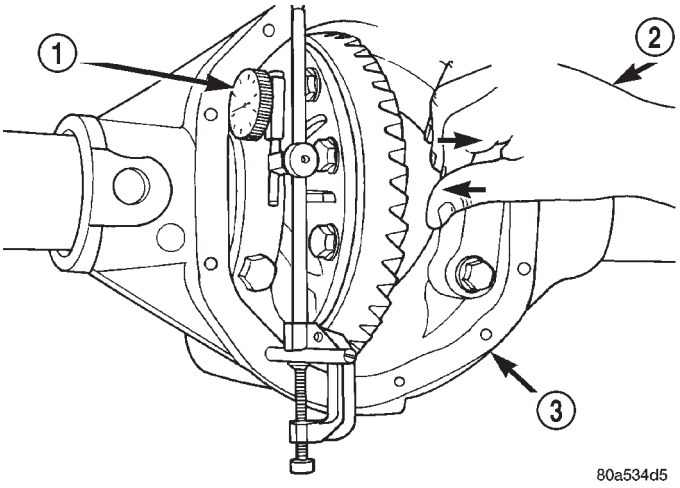

Fig. 20 Differential Case and Dial Indicator

1 - READ DIAL INDICATOR
2 - FORCE DIFFERENTIAL CASE TO RING GEAR SIDE
3 - AXLE HOUSING

(12) Add 0.152 mm (0.006 in.) to the zero end play total. This new total represents the thickness of shims to compress, or preload the new bearings when the differential is installed.

(13) Rotate dial indicator out of the way on the pilot stud.

(14) Remove differential case and dummy bearings from the housing.

(15) Install the pinion gear in axle housing. Install the pinion yoke and establish the correct pinion rotating torque.

(16) Install differential case and Dummy Bearings D-348 in the housing.

(17) Install a single dummy shim in the ring gear side. Install bearing caps and tighten bolts snug.

(18) Seat ring gear side dummy bearing (Fig. 17).

(19) Position the dial indicator plunger on a flat surface between the ring gear bolt heads. (Fig. 18).

(20) Push and hold differential case toward pinion gear and zero dial indicator (Fig. 21).

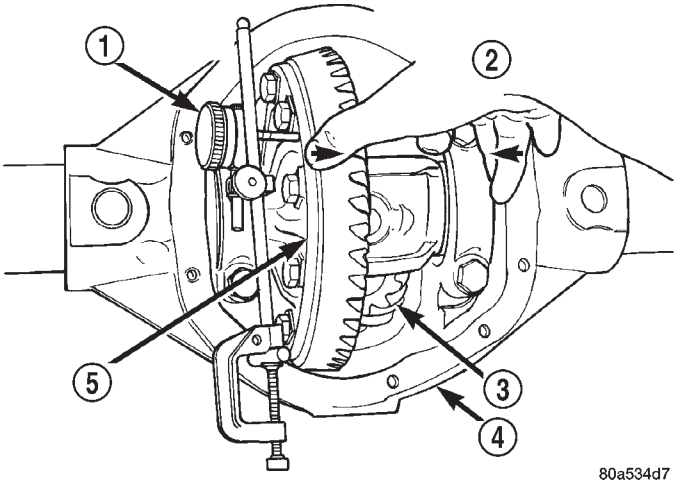

Fig. 21 Zero Dial Indicator

1 - ZERO DIAL INDICATOR FACE
2 - FORCE DIFFERENTIAL CASE TO PINION GEAR SIDE
3 - PINION GEAR
4 - AXLE HOUSING
5 - DIFFERENTIAL CASE

(21) Push and hold differential case to ring gear side of the housing and record dial indicator reading (Fig. 22). Add dummy shim thickness to this reading. This will be the total shim thickness to achieve zero backlash.

(22) Subtract 0.076 mm (0.003 in.) from the dial indicator reading to compensate for backlash between ring and pinion gears. This total is the thickness shim required to achieve proper backlash.

(23) Subtract the backlash shim thickness from the total preload shim thickness. The remainder is the shim thickness required on the pinion side of the housing.

(24) Rotate dial indicator out of the way on pilot stud.

(25) Remove differential case and dummy bearings from the housing.

(26) Install side bearings and cups on differential case.

REAR AXLE - 198RBI (Continued)

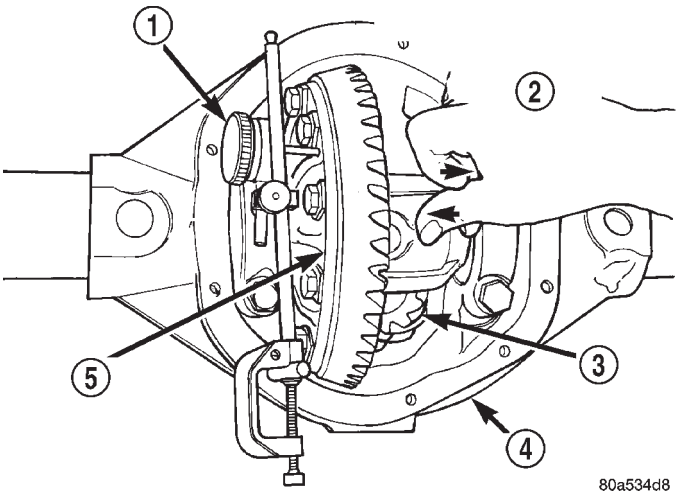

Fig. 22 Differential To Ring Gear Side

1 - READ DIAL INDICATOR
2 - FORCE DIFFERENTIAL CASE TO RING GEAR SIDE
3 - PINION GEAR
4 - AXLE HOUSING
5 - DIFFERENTIAL CASE

(27) Install spreader W-129-B utilizing some items from Adapter Set 6987, on the housing and spread axle opening enough to receive differential case.

CAUTION: Do not spread over 0.38 mm (0.015 in.). If housing is over-spread, it could be distorted or damaged.

(28) Place the bearing preload shims in the housing, against the axle tubes.

(29) Install differential case into the housing.

(30) Remove spreader from the housing.

(31) Rotate the differential case several times to seat the side bearings.

(32) Position the indicator plunger against a ring gear tooth (Fig. 23).

(33) Push and hold ring gear upward while not allowing the pinion gear to rotate.

(34) Zero dial indicator face to pointer.

(35) Push and hold ring gear downward while not allowing the pinion gear to rotate. Dial indicator reading should be between 0.12-0.20 mm (0.005-0.008 in.). If backlash is not within specifications transfer the necessary amount of shim thickness from one side of the axle housing to the other (Fig. 24).

(36) Verify differential case and ring gear runout by measuring ring to pinion gear backlash at eight locations around the ring gear. Readings should not vary more than 0.05 mm (0.002 in.). If readings vary more than specified, the ring gear or the differential case is defective.

After the proper backlash is achieved, perform Gear Contact Pattern Analysis procedure.

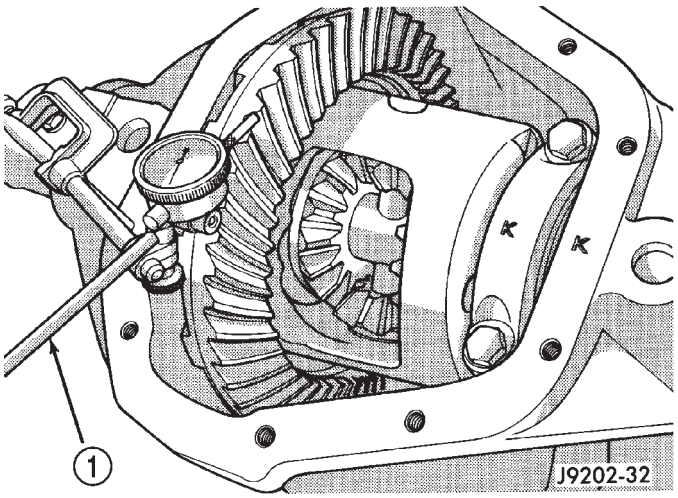

Fig. 23 Ring Gear Backlash Measurement

1 - DIAL INDICATOR

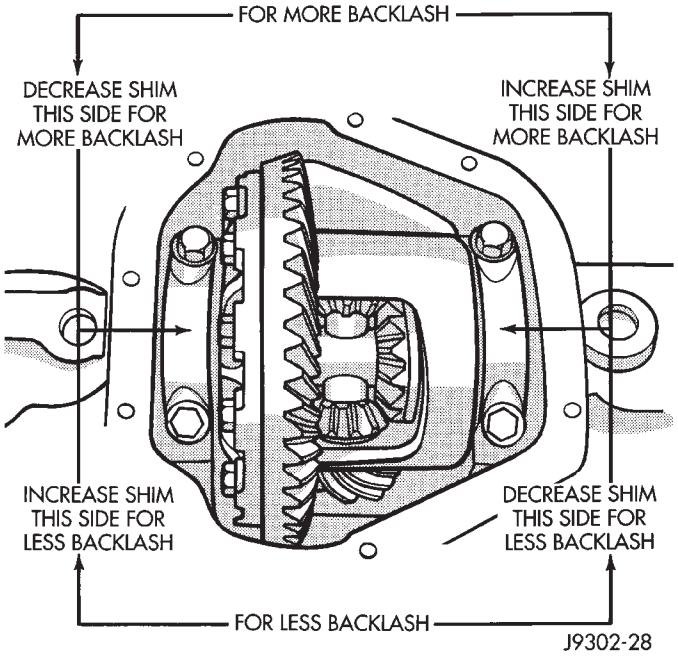

Fig. 24 Backlash Shim

GEAR CONTACT PATTERN

The ring gear and pinion teeth contact patterns will show if the pinion depth is correct in the housing. It will also show if the ring gear backlash has been adjusted correctly. The backlash can be adjusted within specifications to achieve desired tooth contact patterns.

(1) Apply a thin coat of hydrated ferric oxide or equivalent to the drive and coast side of the ring gear teeth.

(2) Wrap, twist and hold a shop towel around the pinion yoke to increase the turning resistance of the

REAR AXLE - 198RBI (Continued)

pinion. This will provide a more distinct contact pattern.

(3) With a boxed end wrench on a ring gear bolt, rotate the differential case one complete revolution in both directions while a load is being applied from shop towel.

The areas on the ring gear teeth with the greatest degree of contact against the pinion teeth will squeegee the compound to the areas with the least amount of contact. Note and compare patterns on the ring gear teeth to Gear Tooth Contact Patterns chart (Fig. 25) and adjust pinion depth and gear backlash as necessary.

DIFFERENTIAL BEARING PRELOAD CHECK

The final check on the differential assembly before installing the axles is torque to rotate pinion and differential combined. This will verify the correct differential bearing preload.

Torque to rotate the differential and pinion should be the torque to rotate the pinion plus 0.79-1.24 N·m (7-11 in. lbs.).

REAR AXLE - 198RBI (Continued)

DRIVE SIDE OF RING GEAR TEETH	COAST SIDE OF RING GEAR TEETH	
HEEL TOE 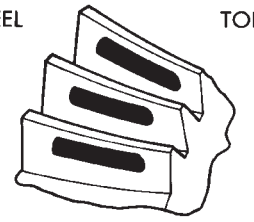	TOE HEEL 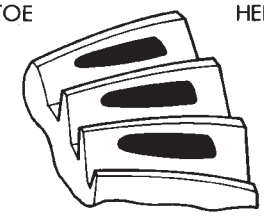	DESIRABLE CONTACT PATTERN. PATTERN SHOULD BE CENTERED ON THE DRIVE SIDE OF TOOTH. PATTERN SHOULD BE CENTERED ON THE COAST SIDE OF TOOTH, BUT MAY BE SLIGHTLY TOWARD THE TOE. THERE SHOULD ALWAYS BE SOME CLEARANCE BETWEEN CONTACT PATTERN AND TOP OF THE TOOTH.
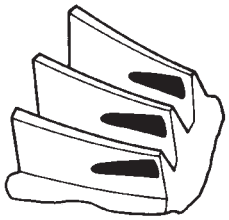	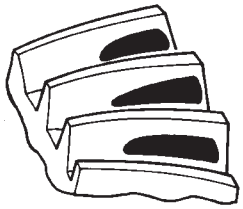	RING GEAR BACKLASH CORRECT. **THINNER** PINION GEAR DEPTH SHIM REQUIRED.
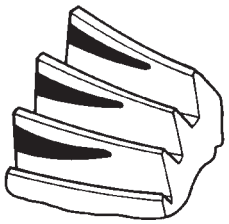	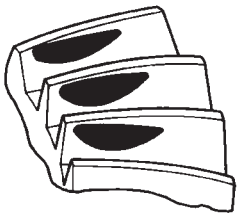	RING GEAR BACKLASH CORRECT. **THICKER** PINION GEAR DEPTH SHIM REQUIRED.
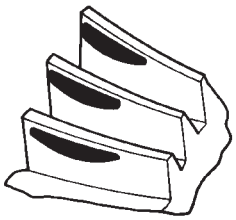	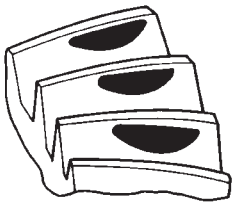	PINION GEAR DEPTH SHIM CORRECT. **DECREASE** RING GEAR BACKLASH.
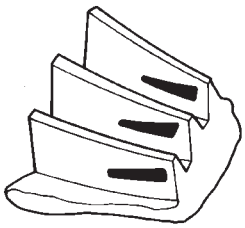	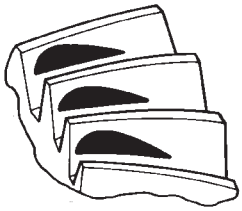	PINION GEAR DEPTH SHIM CORRECT. **INCREASE** RING GEAR BACKLASH.

J9003-24

Fig. 25 Gear Tooth Contact Patterns

SPECIFICATIONS

REAR AXLE - 198RBI

AXLE SPECIFICATIONS

DESCRIPTION	SPECIFICATION
Axle Ratio	3.07, 3.55, 3.73, 4.10
Differential Bearing Preload	0.1 mm (0.004 in.)
Differential Side Gear Clearance	0.0-0.15 mm (0.0-0.006 in.)
Ring Gear Diameter	198 mm (7.795 in.)
Ring Gear Backlash	0.12-0.20 mm (0.005-0.008 in.)
Pinion Gear Std. Depth	96.85 mm (3.813 in.)
Pinion Bearing Preload - Original Bearings	1-2 N·m (10-20 in. lbs.)
Pinion Bearing Preload - New Bearings	1.7-3.4 N·m (15-30 in. lbs.)

TORQUE SPECIFICATIONS

DESCRIPTION	N·m	Ft. Lbs.	In. Lbs.
Differential Cover Bolts	41	30	—
Bearing Cap Bolts	77	57	—
Ring Gear Bolts	129-142	95-105	—
Pinion Nut	271-474	200-350	—
Pinion Mate Shaft Screw	16.25	12	—
Axle Bearing Retainer Plate Nuts	61	45	—

SPECIAL TOOLS

AXLE

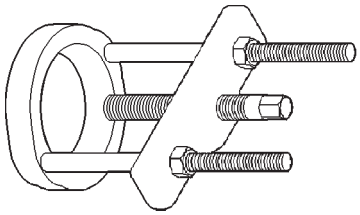

Puller C-293-PA

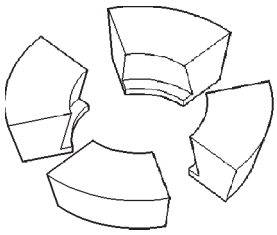

Adapter C-293-40

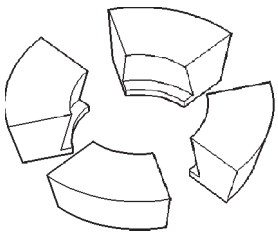

Adapter 8352

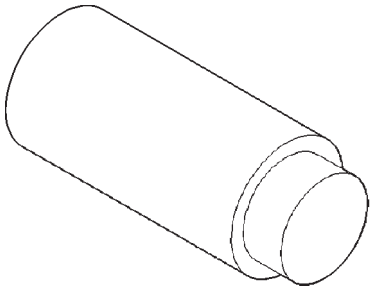

Adapter Plug SP-3289

SPECIAL TOOLS (Continued)

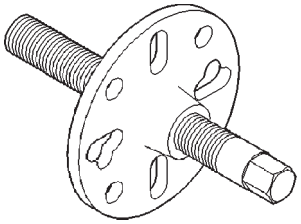

Puller C-452

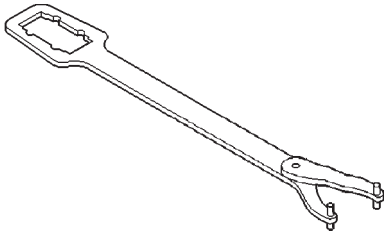

Wrench C-3281

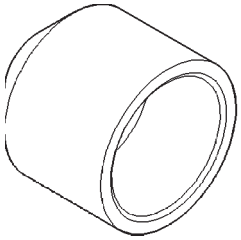

Installer C-3972-A

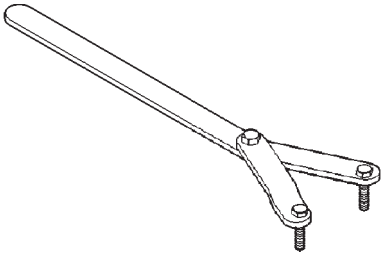

Spanner Wrench 6958

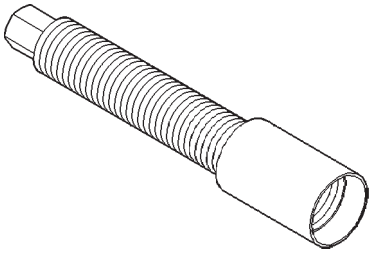

Installer Screw 8112

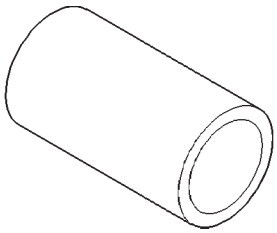

Cup 8109

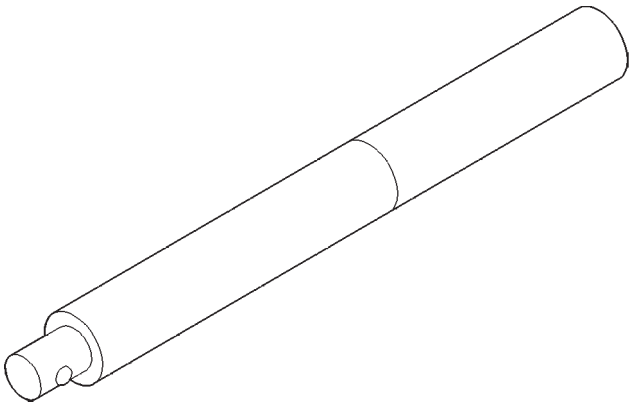

Handle C-4171

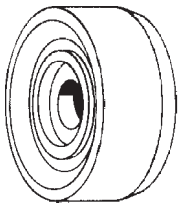

Installer C-3716-A

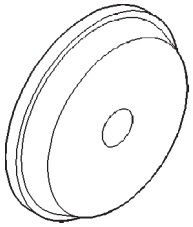

Installer D-130

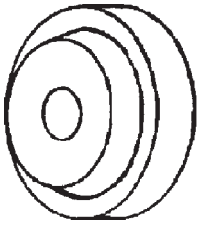

Installer D-146

AXLE SHAFTS (Continued)

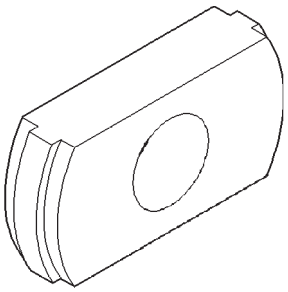

Remover C-4345

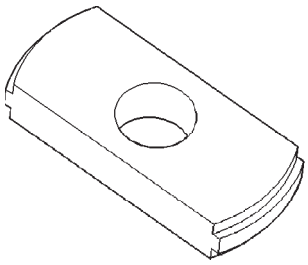

Remover D-149

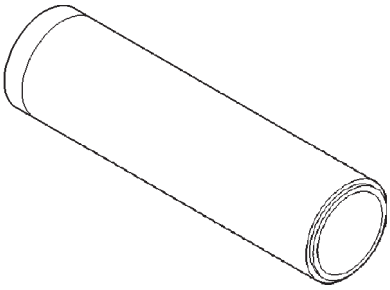

Installer W-262

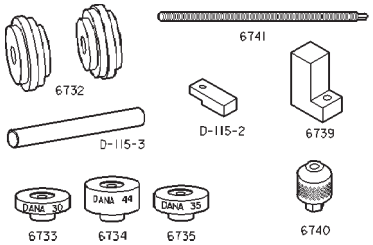

Pinion Depth 6774

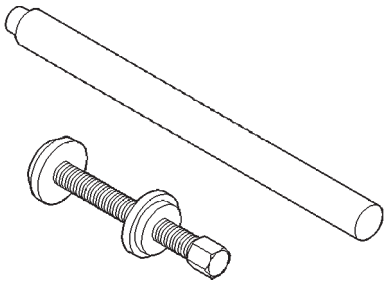

Trac-lok Tools 6960

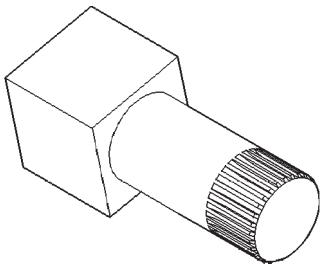

Fixture Holding 6965

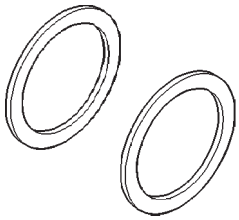

Shims Dummy 8107

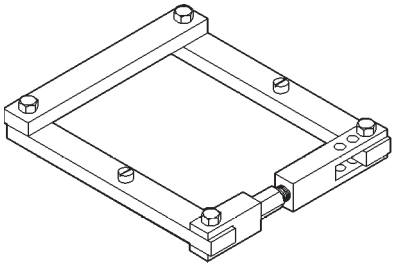

Spreader W-129-B

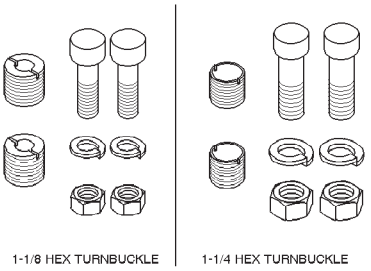

Adapter Kit 6987

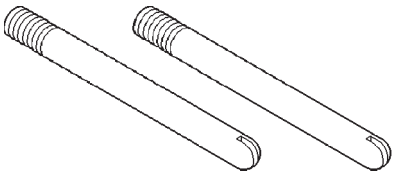

Pilot Studs C-3288-B

AXLE SHAFTS (Continued)

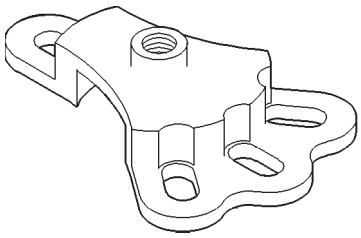

Hub Puller 6790

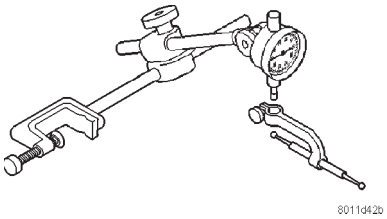

Dial Indicator C-3339

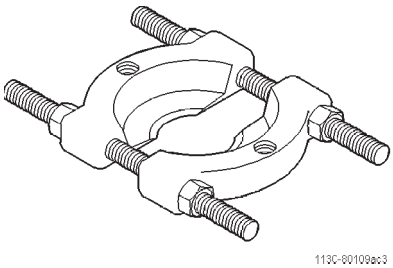

Splitter Bearing 1130

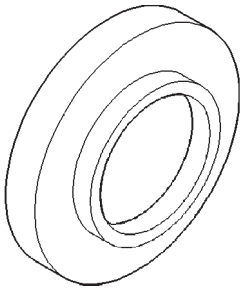

Installer Gear/Bearing 7913-A

AXLE SHAFTS

REMOVAL

(1) Place transmission in neutral.
(2) Raise and support vehicle.
(3) Remove wheel and tire assembly.
(4) Remove brake caliper (Refer to 5 - BRAKES/HYDRAULIC/MECHANICAL/DISC BRAKE CALIPERS - REMOVAL) and rotor. (Refer to 5 - BRAKES/HYDRAULIC/MECHANICAL/ROTORS - REMOVAL)
(5) Remove nuts holding axle retainer plate to axle tube from the rear of the axle flange.
(6) Pull axle shaft from the axle with Slide Hammer 7420 and Adapter 6790. Mount the adapter to the axle with lug nuts.

NOTE: It is normal that the axle bearing race is loose in the axle tube.

INSTALLATION

(1) Insall axle into the axle tube with the flat area of the retainer plate upward.
(2) Insert retaining plate studs into the brake backing plate and axle tube flange.
(3) Install retainer nuts and tighten nuts to 61 N·m (45 ft. lbs.).
(4) Install the brake caliper (Refer to 5 - BRAKES/HYDRAULIC/MECHANICAL/DISC BRAKE CALIPERS - INSTALLATION) and rotor. (Refer to 5 - BRAKES/HYDRAULIC/MECHANICAL/ROTORS - INSTALLATION)
(5) Install wheel and tire.
(6) Check and fill the differential with gear lubricant.
(7) Lower vehicle.

AXLE BEARINGS/SEALS

REMOVAL

(1) Remove axle shaft from vehicle.

NOTE: It is normal that the axle bearing race is loose in the axle tube.

(2) Drill a shallow hole into soft steel axle bearing retaining ring with a 3/8 in. drill bit (Fig. 26). Use a drill depth stop to avoid marking the axle.
(3) With a cold chisel cut the retaining ring across drilled hole. (Fig. 27)
(4) Slide retaining ring from axle shaft.
(5) Remove axle bearing from the shaft with, a press and Splitter 1130 placed between the seal and bearing (Fig. 28).
(6) Remove seal from axle.
(7) Remove retaining plate from axle shaft.

INSTALLATION

(1) Verify axle shaft retaining plate is flat with a straight edge.

NOTE: If the plate is warped or the studs are loose in the plate replace the retaining plate.

(2) Install retaining plate on the axle shaft (Fig. 29).
(3) Apply a coat of multi-purpose grease on sealing surface of axle seal.
(4) Install seal on the axle shaft with cavity away from retaining plate (Fig. 29).

AXLE BEARINGS/SEALS (Continued)

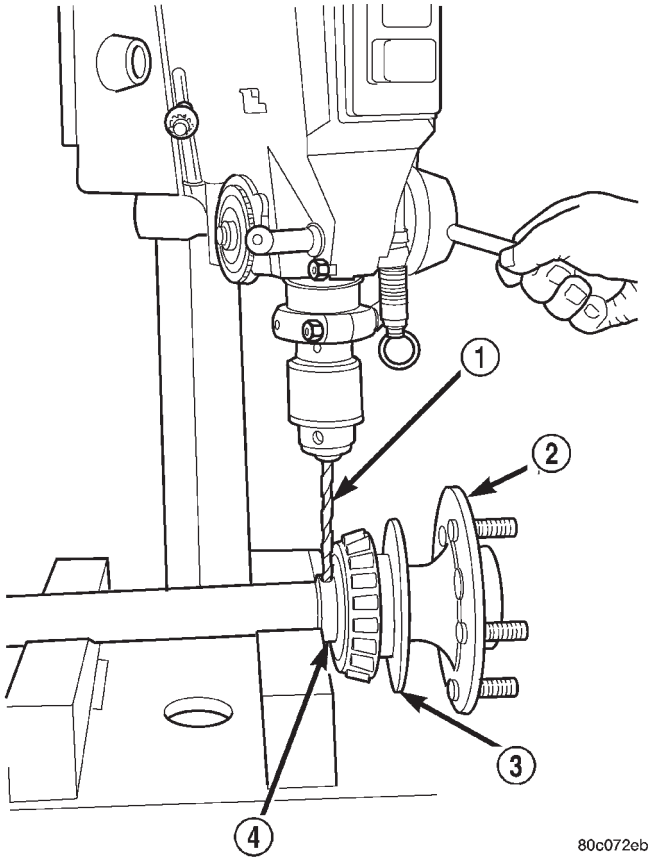

Fig. 26 Drill Retaining Ring

1 - DRILL BIT
2 - AXLE
3 - RETAINING PLATE
4 - RETAINING RING

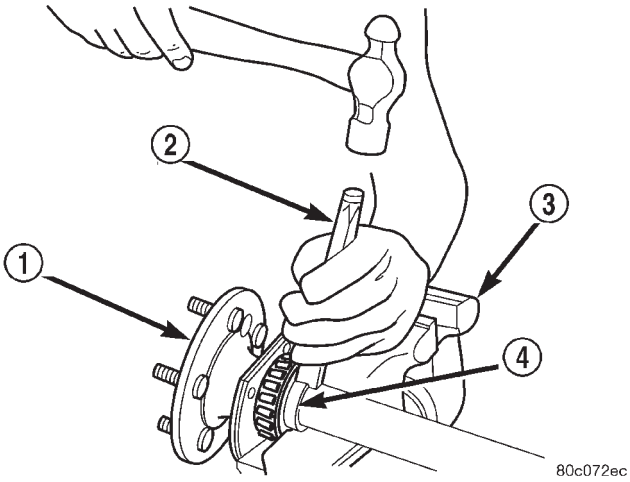

Fig. 27 Retaining Ring

1 - AXLE
2 - COLD CHISEL
3 - VISE
4 - RETAINING RING

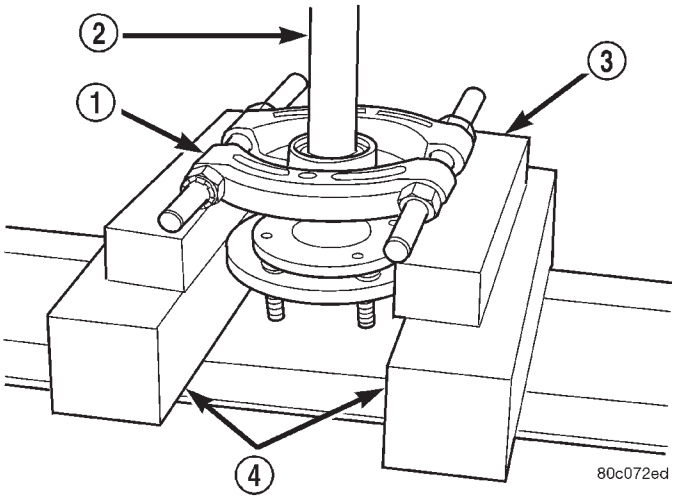

Fig. 28 Axle Bearing And Seal

1 - AXLE
2 - PRESS PLATES
3 - BLOCKS
4 - SPLITTER - 1130

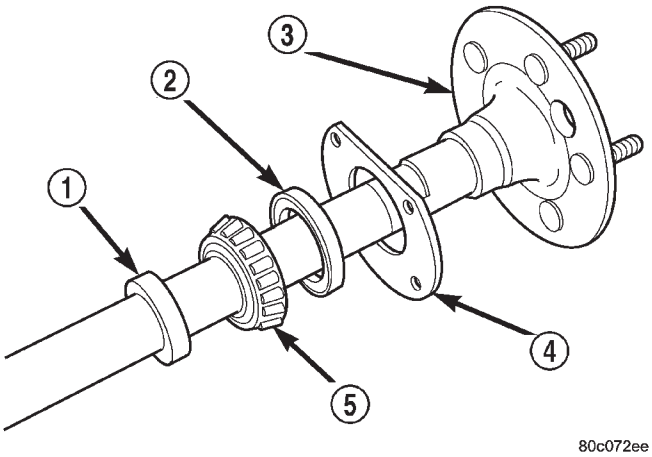

Fig. 29 Axle Bearing And Seal Components

1 - RETAINING RING
2 - SEAL
3 - AXLE
4 - RETAINING PLATE
5 - AXLE BEARING

(5) Lubricate bearing with Mopar® Wheel Bearing Grease or equivalent. Wipe excess grease from the bearing.

(6) Install bearing on the axle shaft with Installer 7913 and a press (Fig. 30).

(7) Press soft metal retaining ring onto axle shaft with Installer 7913 and a press (Fig. 31).

(8) Install axle in vehicle.

PINION SEAL (Continued)

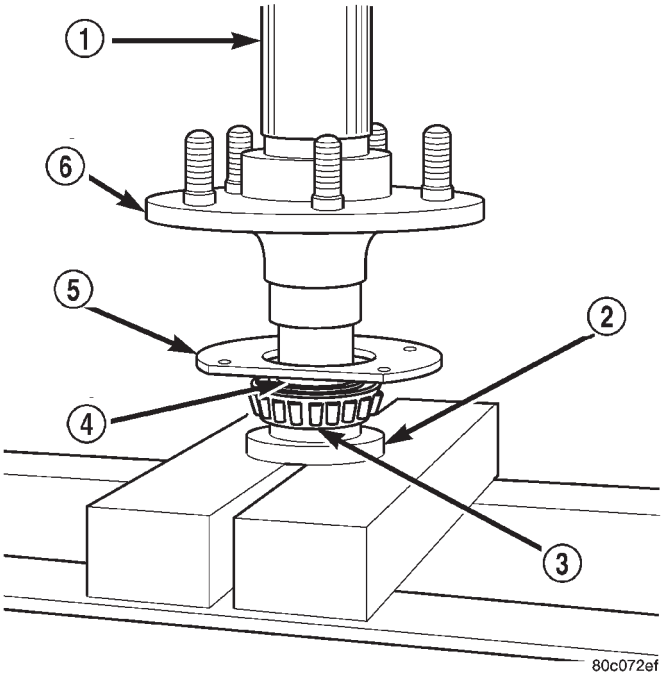

Fig. 30 Bearing On Axle

1 - PRESS RAM
2 - INSTALLER - 7913
3 - AXLE BEARING
4 - SEAL
5 - RETAINING PLATE
6 - AXLE

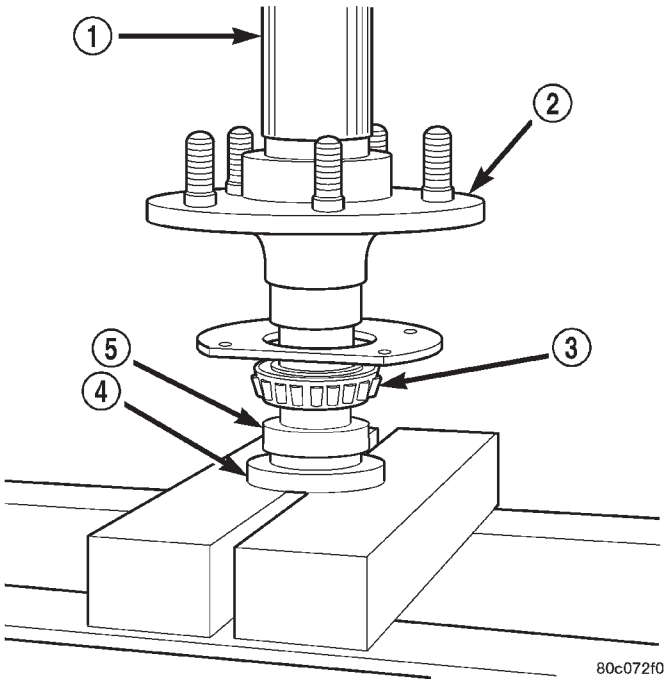

Fig. 31 Bearing Retaining Ring On Axle

1 - PRESS
2 - AXLE
3 - AXLE BEARING
4 - INSTALLER - 7913
5 - RETAINING RING

PINION SEAL

REMOVAL

(1) Raise and support the vehicle.

(2) Remove wheel and tire assemblies.

(3) Remove brake rotors (Refer to 5 - BRAKES/HYDRAULIC/MECHANICAL/ROTORS - REMOVAL) and calipers. (Refer to 5 - BRAKES/HYDRAULIC/MECHANICAL/DISC BRAKE CALIPERS - REMOVAL)

(4) Mark propeller shaft and pinion yoke for installation reference.

(5) Remove propeller shaft from the yoke.

(6) Rotate the pinion gear a minimum of ten times and verify pinion rotates smoothly.

(7) Record rotating torque of the pinion gear with an inch pound dial-type torque wrench, for installation reference.

(8) Hold the pinion yoke with Spanner Wrench 6958 and remove the pinion nut and washer (Fig. 32).

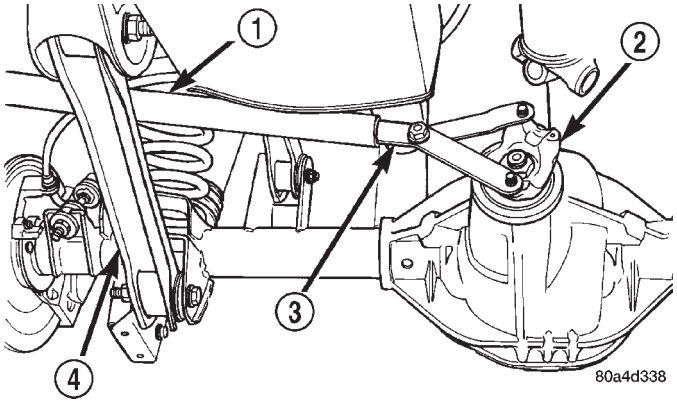

Fig. 32 Pinion Yoke Holder

1 - PIPE
2 - PINION YOKE
3 - WRENCH - 6958
4 - LOWER CONTROL ARM

(9) Remove pinion yoke with Remover C-452 and Wrench C-3281 (Fig. 33).

PINION SEAL (Continued)

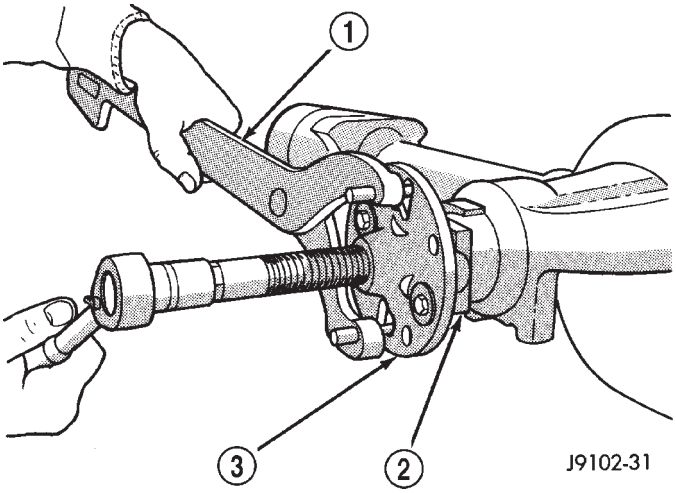

Fig. 33 Pinion Yoke

1 - SPECIAL TOOL C-3281
2 - YOKE
3 - SPECIAL TOOL C-452

(10) Remove pinion gear seal with Remover 7794-A and slide hammer (Fig. 34).

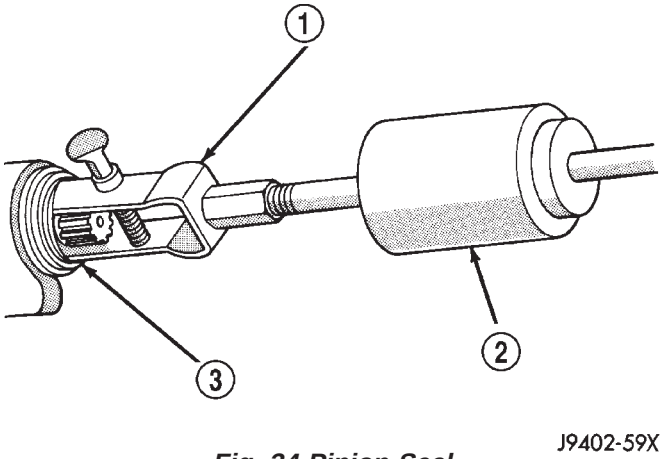

Fig. 34 Pinion Seal

1 - REMOVER - 7794-A
2 - SLIDE HAMMER
3 - PINION SEAL

INSTALLATION

(1) Apply a light coating of gear lubricant on the lip of pinion seal and install seal with Installer C-3972-A and Handle C-4171 (Fig. 35).

(2) Install yoke on pinion gear with Screw 8112, Cup 8109 and Spanner Wrench 6958 (Fig. 36).

CAUTION: Do not exceed the minimum tightening torque 271 N·m (200 ft. lbs.) when installing the pinion yoke at this point. Damage to the collapsible spacer or bearings may result.

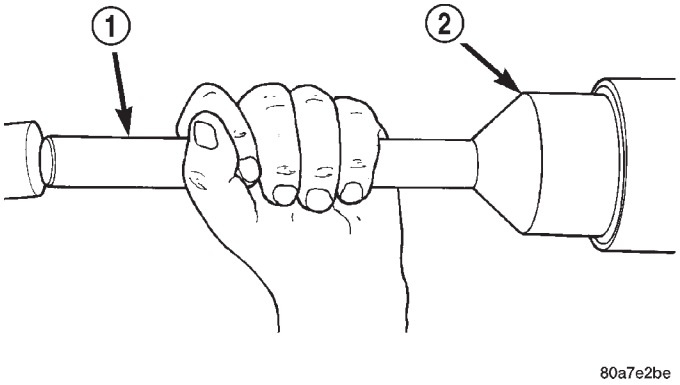

Fig. 35 Pinion Seal

1 - SPECIAL TOOL C-4171
2 - SPECIAL TOOL C-3972–A

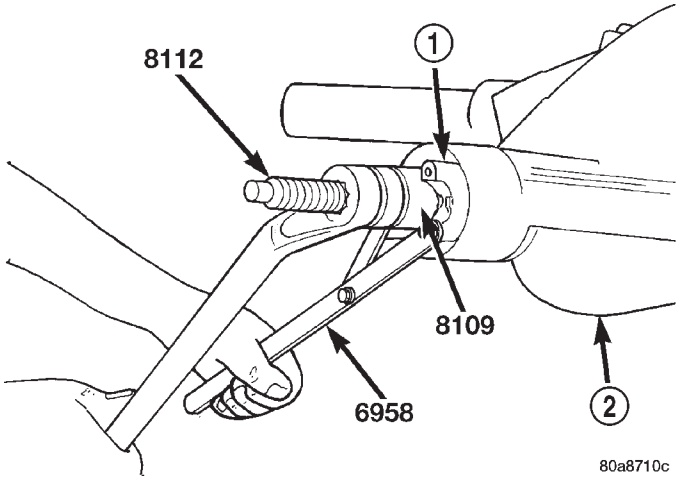

Fig. 36 Pinion Yoke

1 - PINION YOKE
2 - AXLE HOUSING

(3) Install yoke washer and a **new** nut on the pinion gear and tighten the nut until there is zero bearing end-play.

(4) Tighten the nut to 271 N·m (200 ft. lbs.).

CAUTION: Never loosen pinion gear nut to decrease pinion gear bearing rotating torque and never exceed specified preload torque. If preload torque or rotating torque is exceeded a new collapsible spacer must be installed.

(5) Rotate the pinion gear a minimum of ten times and verify pinion rotates smoothly. Rotate pinion shaft an inch pound torque wrench. Rotating torque should be equal to recorded reading plus an additional 0.56 N·m (5 in. lbs.) (Fig. 37).

(6) If the rotating torque is low, use Spanner Wrench 6958 to hold the pinion yoke (Fig. 38), and

PINION SEAL (Continued)

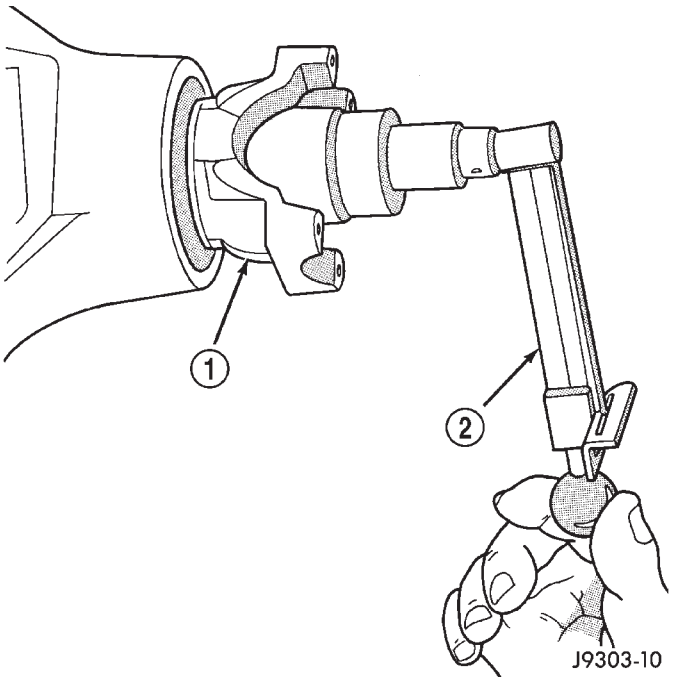

Fig. 37 Pinion Rotation Torque

1 - PINION YOKE
2 -TORQUE WRENCH

tighten the pinion nut in 6.8 N·m (5 ft. lbs.) increments until the proper rotating torque is achieved.

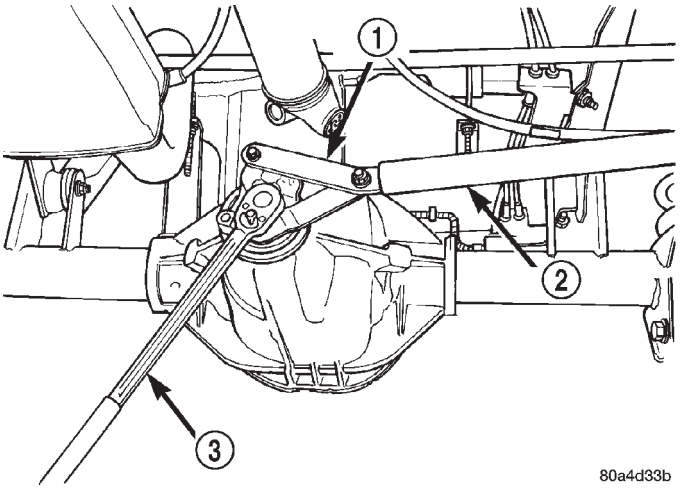

Fig. 38 Pinion Shaft Nut

1 - SPANNER WRENCH - 6958
2 - PIPE
3 - TORQUE WRENCH

CAUTION: If the maximum tightening torque is reached prior to reaching required rotating torque, the collapsible spacer may have been damaged. Replace the collapsible spacer.

(7) Install the propeller shaft with reference marks aligned.

(8) Add gear lubricant to the differential if necessary.

(9) Install brake rotors (Refer to 5 - BRAKES/HYDRAULIC/MECHANICAL/ROTORS - INSTALLATION) and calipers. (Refer to 5 - BRAKES/HYDRAULIC/MECHANICAL/DISC BRAKE CALIPERS - INSTALLATION)

(10) Install wheel and tire assemblies.

(11) Lower the vehicle.

COLLAPSIBLE SPACER

REMOVAL

(1) Raise and support the vehicle.

(2) Remove wheel and tire assemblies.

(3) Remove rear brake rotors (Refer to 5 - BRAKES/HYDRAULIC/MECHANICAL/ROTORS - REMOVAL) and calipers. (Refer to 5 - BRAKES/HYDRAULIC/MECHANICAL/DISC BRAKE CALIPERS - REMOVAL)

(4) Mark propeller shaft and pinion yoke for installation reference and remove propeller shaft.

(5) Rotate pinion gear a minimum of ten times and verify pinion rotates smoothly.

(6) Record rotate torque of the pinion gear, with an inch pound torque wrench for installation reference.

(7) Hold pinion yoke with Spanner Wrench 6958 and remove pinion nut and washer (Fig. 39).

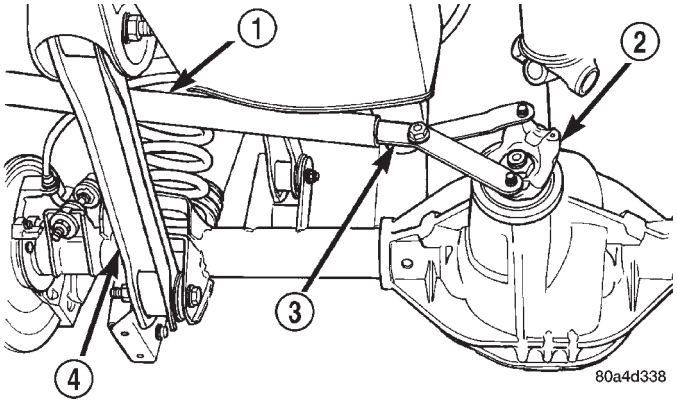

Fig. 39 Pinion Yoke

1 - PIPE
2 - PINION YOKE
3 - SPANNER WRENCH - 6958
4 - LOWER CONTROL ARM

(8) Remove the pinion yoke with Remover C-452 and Wrench C-3281 (Fig. 40).

(9) Remove pinion shaft seal with Remover 7794-A and slide hammer (Fig. 41).

COLLAPSIBLE SPACER (Continued)

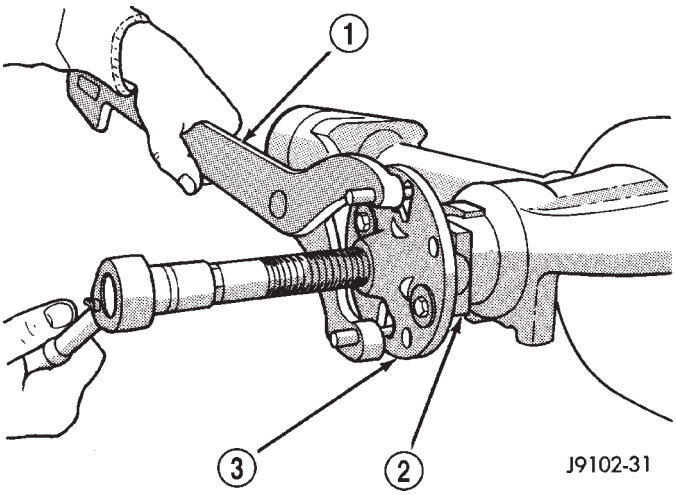

Fig. 40 Pinion Yoke Puller

1 - WRENCH - C-3281
2 - YOKE
3 - PULLER - C-452

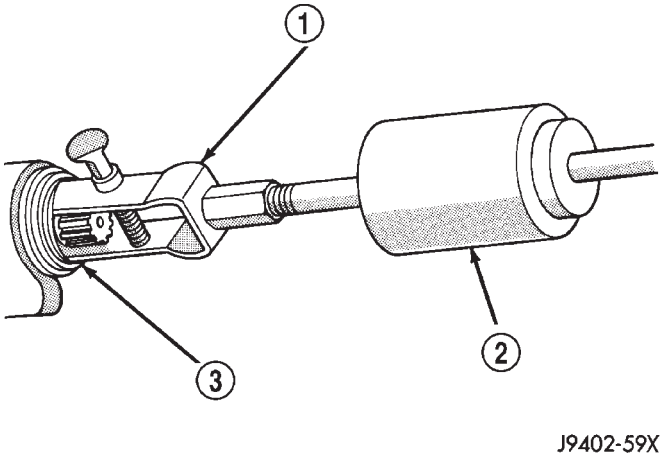

Fig. 41 Pinion Seal Remover

1 - REMOVER - 7794-A
2 - SLIDE HAMMER
3 - PINION SEAL

(10) Remove front pinion bearing using a pair of pick tools to pull the bearing off the pinion gear shaft. If the pinion gear becomes bound on the pinion shaft, lightly tap the end of the shaft with a rawhide/rubber mallet.

(11) Remove the collapsible spacer.

INSTALLATION

(1) Install a **new** collapsible spacer on pinion shaft.

(2) Install pinion front bearing on the pinion shaft.

(3) Apply a light coating of gear lubricant on the lip of pinion seal and install seal with Installer C-3972-A and Handle C-4171 (Fig. 42).

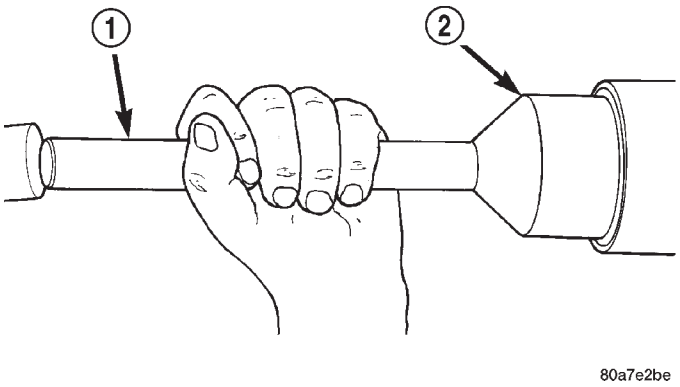

Fig. 42 Pinion Seal Installer

1 - HANDLE - C-4171
2 - INSTALLER - C-3972-A

(4) Install yoke with Screw 8112, Cup 8109 and Spanner Wrench 6958 (Fig. 43).

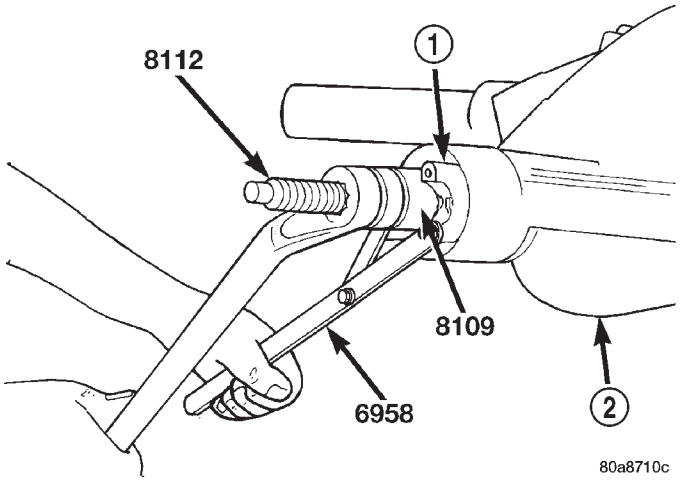

Fig. 43 Pinion Yoke

1 - PINION YOKE
2 - DIFFERENTIAL HOUSING

(5) Install yoke washer and **new** nut on the pinion gear. Tighten the nut to 271 N·m (200 ft. lbs.).

CAUTION: Never loosen pinion gear nut to decrease pinion gear bearing rotating torque and never exceed specified preload torque. If preload torque or rotating torque is exceeded a new collapsible spacer must be installed.

(6) Using yoke with Spanner Wrench 6958 and a torque wrench set at 474 N·m (350 ft. lbs.), (Fig. 44) slowly tighten the nut in 6.8 N·m (5 ft. lbs.) increments until the rotating torque is achieved. Measure the rotating torque frequently to avoid over crushing the collapsible spacer (Fig. 45).

COLLAPSIBLE SPACER (Continued)

NOTE: If more than 474 N·m (350 ft. lbs.) torque is required to crush the collapsible spacer, the spacer is defective and must be replaced.

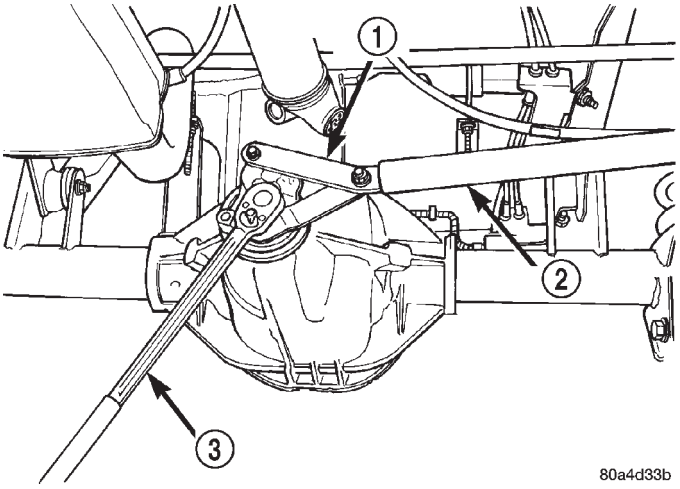

Fig. 44 Pinion Nut

1 - SPANNER WRENCH - 6958
2 - PIPE
3 - TORQUE WRENCH

(7) Check rotating torque with an inch pound torque wrench (Fig. 45). The rotating torque of the pinion gear should be, the reading recorded during removal plus an additional 0.56 N·m (5 in. lbs.).

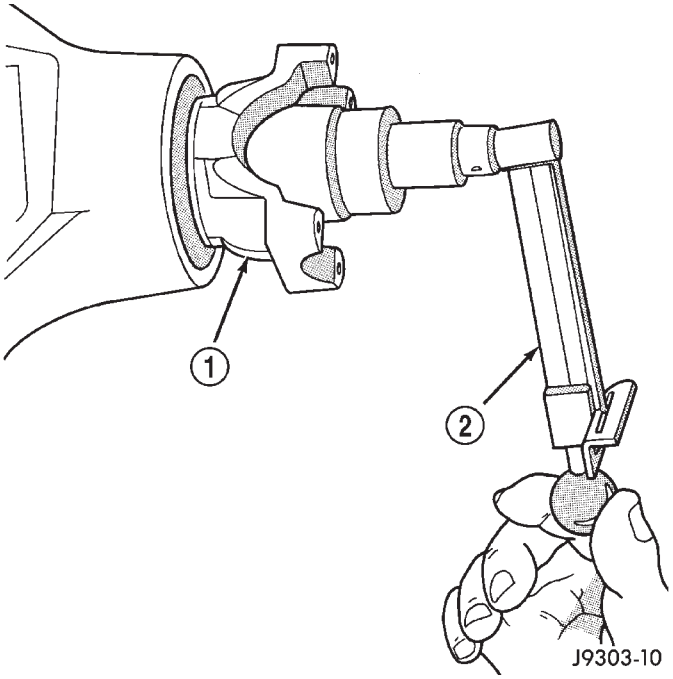

Fig. 45 Pinion Gear Rotating Torque

1 - PINION YOKE
2 - TORQUE WRENCH

(8) Install propeller shaft with reference marks align.

(9) Install rear brake rotors (Refer to 5 - BRAKES/ HYDRAULIC/MECHANICAL/ROTORS - INSTALLATION) and calipers. (Refer to 5 - BRAKES/ HYDRAULIC/MECHANICAL/DISC BRAKE CALIPERS - INSTALLATION)

(10) Add gear lubricant, if necessary.

(11) Install wheel and tire assemblies.

(12) Remove supports and lower vehicle.

DIFFERENTIAL

REMOVAL

(1) Raise and support vehicle.

(2) Remove the lubricant fill hole plug from the differential housing cover.

(3) Remove the differential housing cover and allow fluid to drain.

(4) Clean the housing cavity with flushing oil, light engine oil or lint free cloth. **Do not use water, steam, kerosene or gasoline for cleaning.**

(5) Remove axle shafts.

(6) Note the reference letters stamped on the bearing caps and housing machined sealing surface (Fig. 46).

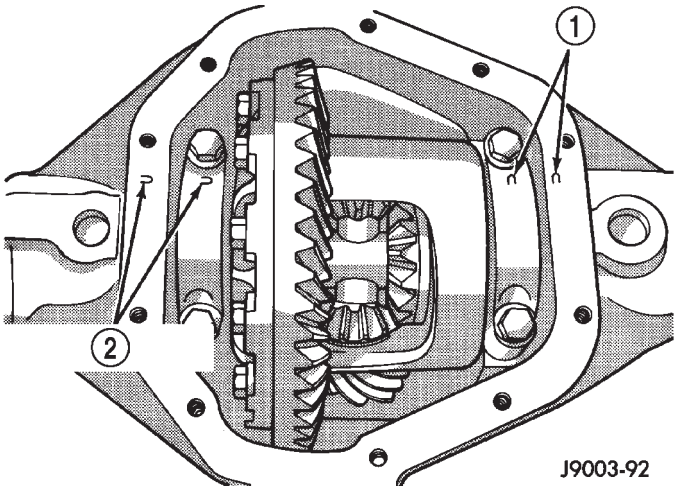

Fig. 46 Bearing Cap Identification

1 - REFERENCE LETTERS
2 - REFERENCE LETTERS

(7) Loosen the differential bearing cap bolts.

(8) Position Spreader W-129-B, utilizing some items from Adapter set 6987, with the tool dowel pins seated in the locating holes (Fig. 47). Install the hold-down clamps and tighten the tool turnbuckle finger-tight.

(9) Install a Pilot Stud C-3288-B at the left side of the differential housing. Attach Dial Indicator C-3339 to pilot stud. Load the indicator plunger against the

DIFFERENTIAL (Continued)

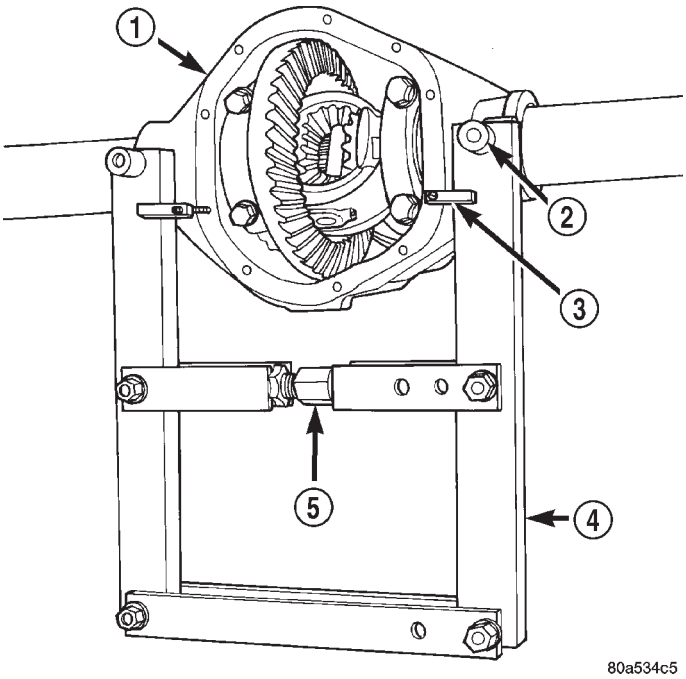

Fig. 47 Spreader Location

1 - DIFFERENTIAL HOUSING
2 - ADAPTER
3 - SAFETY HOLD DOWN
4 - SPREADER
5 - TURNBUCKLE

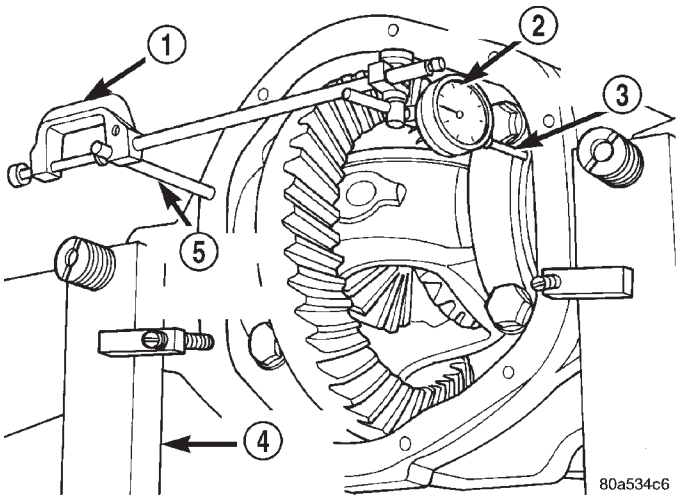

Fig. 48 Dial Indicator Location

1 - CLAMP
2 - DIAL INDICATOR
3 - LEVER ADAPTER
4 - SPREADER
5 - PILOT STUD

opposite side of the housing (Fig. 48) and zero the indicator.

CAUTION: Do not spread over 0.38 mm (0.015 in). If the housing is over–spread, it could be distorted or damaged.

(10) Spread the housing enough to remove the differential case from the housing. Measure the distance with the dial indicator (Fig. 49).

(11) Remove the dial indicator.

(12) While holding the differential case in position, remove the differential bearing cap bolts and caps.

(13) Remove the differential from the housing. Ensure that the differential bearing cups remain in position on the differential bearings (Fig. 50).

(14) Remove bearing cups from the differential and tag them to indicate their location on the differential.

(15) Remove differential case preload shims from the housing and tag them to indicate their location in the housing.

(16) Remove spreader from housing.

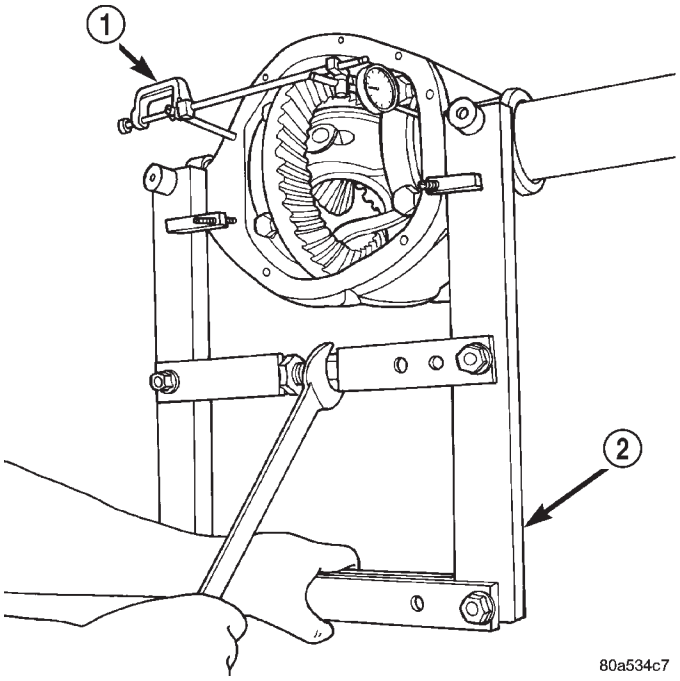

Fig. 49 Spread Differential Housing

1 - DIAL INDICATOR
2 - SPREADER

DIFFERENTIAL (Continued)

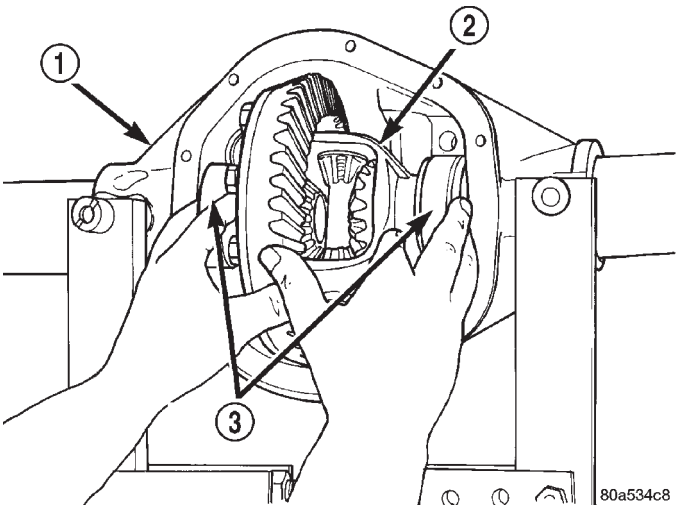

Fig. 50 Differential

1 - DIFFERENTIAL HOUSING
2 - DIFFERENTIAL CASE
3 - BEARING CUPS

DISASSEMBLY

(1) Remove pinion mate shaft lock screw (Fig. 51).

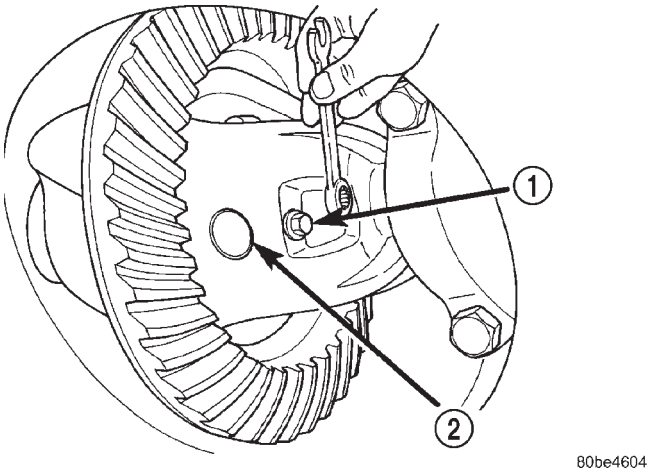

Fig. 51 Pinion Mate Shaft Lock Screw

1 - LOCK SCREW
2 - PINION MATE SHAFT

(2) Remove pinion mate shaft.

(3) Rotate differential side gears and remove the differential pinion gears and thrust washers (Fig. 52).

(4) Remove the differential side gears and thrust washers.

ASSEMBLY

(1) Install the differential side gears and thrust washers.

(2) Install the differential pinion gears and thrust washers.

(3) Install the pinion mate shaft.

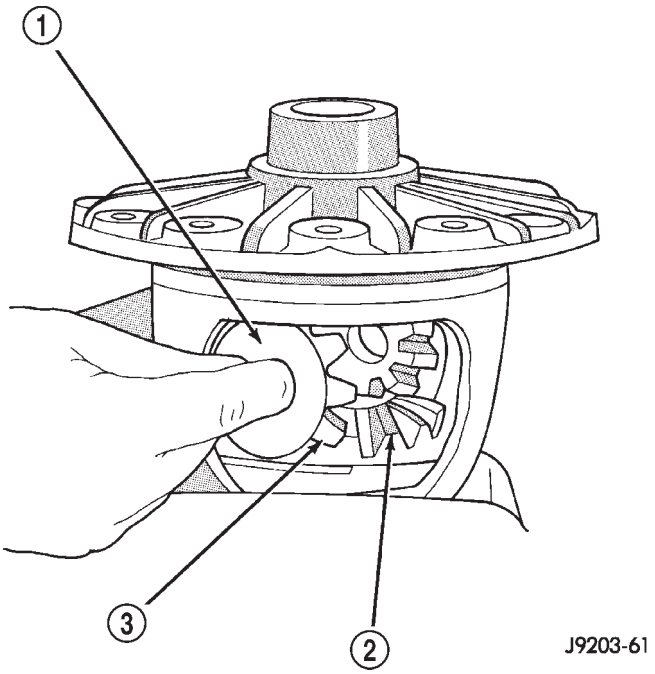

Fig. 52 Pinion Mate Gear

1 - THRUST WASHER
2 - SIDE GEAR
3 - PINION MATE GEAR

(4) Align the hole in the pinion mate shaft with the hole in the differential case and install the pinion mate shaft lock screw.

(5) Lubricate all differential components with hypoid gear lubricant.

INSTALLATION

NOTE: If replacement differential bearings or differential case are being installed, differential side bearing shim requirements may change. Refer Adjustments (Differential Bearing Preload and Gear Backlash) to determine the proper shim selection.

(1) Position Spreader W-129-B, utilizing some items from Adapter set 6987, with the tool dowel pins seated in the locating holes (Fig. 53). Install the holddown clamps and tighten the tool turnbuckle finger-tight.

(2) Install a Pilot Stud C-3288-B at the left side of the differential housing. Attach Dial Indicator C-3339 to pilot stud. Load the indicator plunger against the opposite side of the housing and zero the indicator.

CAUTION: Do not spread over 0.38 mm (0.015 in). If the housing is over–spread, it could be distorted or damaged.

(3) Spread the housing enough to install the case in the housing. Measure the distance with the dial indicator.

DIFFERENTIAL (Continued)

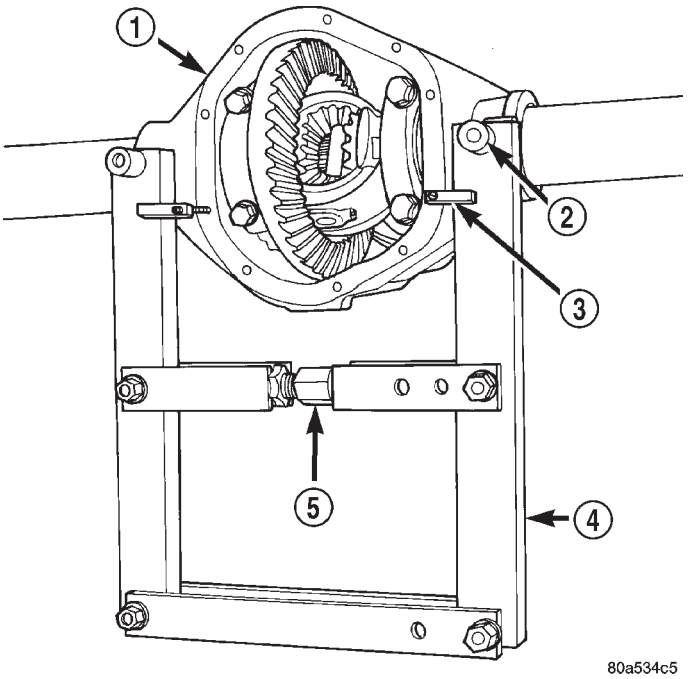

Fig. 53 Spreader Location

1 - DIFFERENTIAL HOUSING
2 - ADAPTER KIT COMPONENTS - 6987
3 - SAFETY HOLD DOWN
4 - SPREADER - W-129-B
5 - TURNBUCKLE

(4) Remove the dial indicator.

(5) Install differential case in the housing. Ensure that the differential bearing cups remain in position on the differential bearings and that the preload shims remain between the face of the bearing cup and the housing. Tap the differential case to ensure the bearings cups and shims are fully seated in the housing.

NOTE: When installing a Vari-lok™ differential the oil feed tube must be pointed to the bottom of the housing. If differential is installed with the oil feed tube pointed toward the top, the anti-rotation tabs will be damaged.

(6) Install the bearing caps in their original locations (Fig. 54).

(7) Loosely install differential bearing cap bolts.

(8) Remove axle housing spreader.

(9) Tighten the bearing cap bolts to 77 N·m (57 ft. lbs.).

(10) Install the axle shafts.

(11) Apply a 6.35mm (1/4 in.) bead of Mopar® Silicone Rubber Sealant or equivalent to the housing cover (Fig. 55).

Install the housing cover within 5 minutes after applying the sealant.

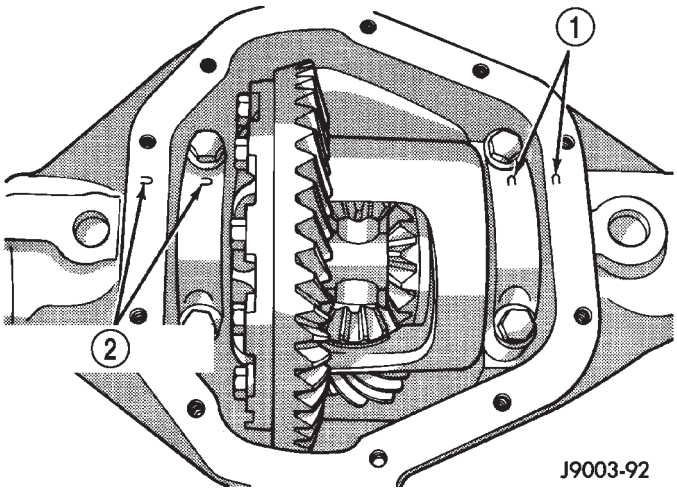

Fig. 54 Bearing Cap Reference

1 - REFERENCE LETTERS
2 - REFERENCE LETTERS

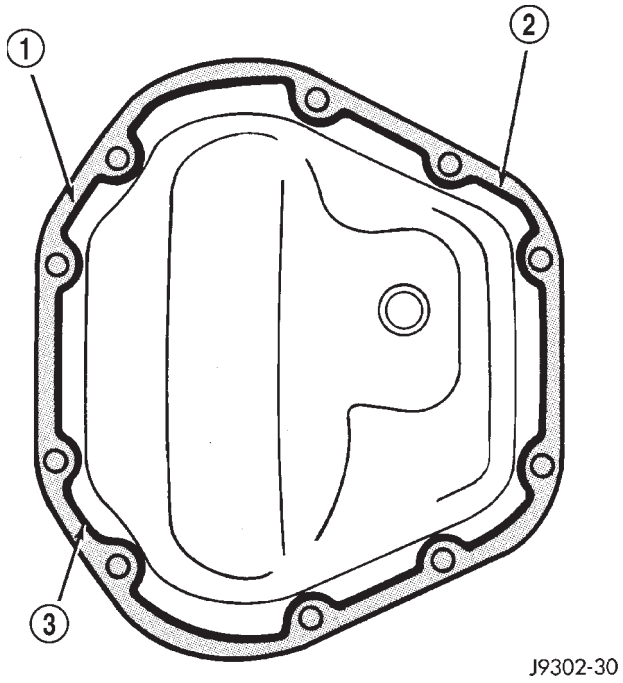

Fig. 55 Differential Cover - Typical

1 - COVER
2 - SEALANT
3 - SEALANT BEAD

(12) Install the cover and any identification tag. Tighten the cover bolts in a criss-cross pattern to 41 N·m (30 ft. lbs.).

(13) Refill the differential with Mopar® Hypoid Gear Lubricant or equivalent to bottom of the fill plug hole. Refer to Lubricant Specifications for correct quantity and type.

(14) Install fill hole plug.

(15) Remove support and lower the vehicle.

DIFFERENTIAL - TRAC-LOC

DIAGNOSIS AND TESTING - TRAC-LOK™

The most common problem is a chatter noise when turning corners. Before removing a Trac-lok™ unit for repair, drain, flush and refill the axle with the specified lubricant. A container of Mopar Trac-lok™ Lubricant (friction modifier) should be added after repair service or during a lubricant change.

After changing the lubricant, drive the vehicle and make 10 to 12 slow, figure-eight turns. This maneuver will pump lubricant through the clutches. This will correct the condition in most instances. If the chatter persists, clutch damage could have occurred.

DIFFERENTIAL TEST

The differential can be tested without removing the differential case by measuring rotating torque. Make sure brakes are not dragging during this measurement.

(1) Place blocks in front and rear of both front wheels.

(2) Raise one rear wheel until it is completely off the ground.

(3) Engine off, transmission in neutral, and parking brake off.

(4) Remove wheel and bolt Special Tool 6790 or equivalent tool to studs.

(5) Use torque wrench on special tool to rotate wheel and read rotating torque (Fig. 56).

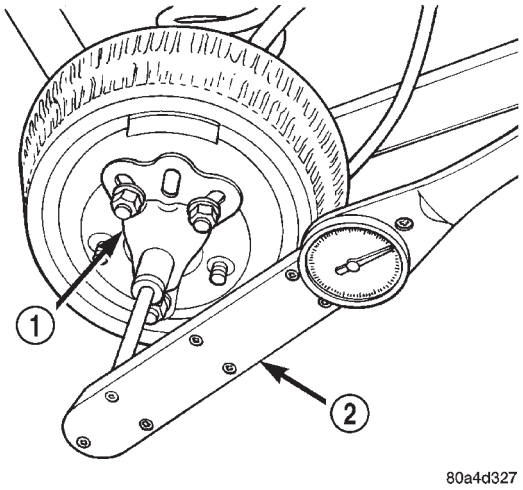

Fig. 56 Trac-lok™ Test -Typical

1 - SPECIAL TOOL 6790 WITH BOLT IN CENTER HOLE
2 - TORQUE WRENCH

(6) If rotating torque is less than 22 N·m (30 ft. lbs.) or more than 271 N·m (200 ft. lbs.) on either wheel the unit should be serviced.

DISASSEMBLY

(1) Clamp side gear Holding Fixture 6965 in a vise and position the differential case on the Holding Fixture (Fig. 57).

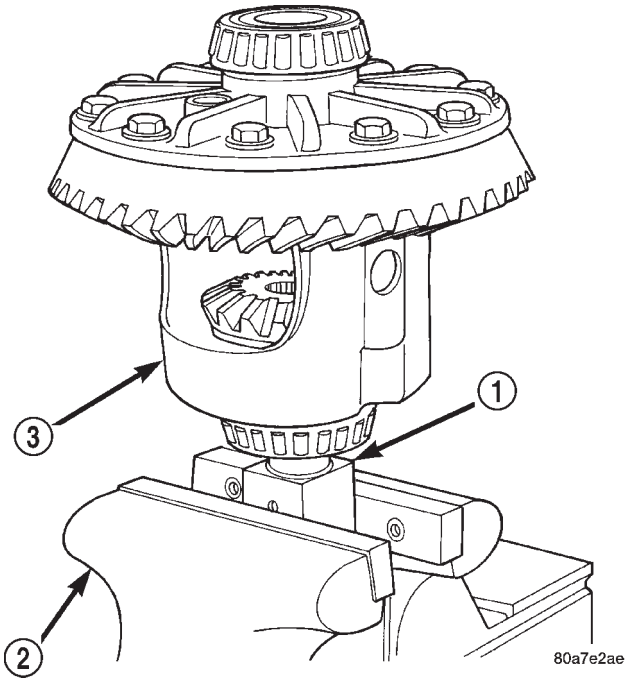

Fig. 57 Differential Case Holding Fixture

1 - FIXTURE - 6965
2 - VISE
3 - DIFFERENTIAL

(2) Remove ring gear if the ring gear is to be replaced. The Trac-lok™ differential can be serviced with the ring gear installed.

(3) Remove the pinion gear mate shaft lock screw (Fig. 58).

(4) Remove pinion gear mate shaft with a drift and hammer (Fig. 59).

(5) Install and lubricate Step Plate C-6960-3 (Fig. 60).

(6) Assemble Threaded Adapter C-6960-1 into top side gear. Thread Forcing Screw C-6960-4 into adapter until it becomes centered in adapter plate.

(7) Position a small screw driver in slot of Threaded Adapter Disc C-6960-1 (Fig. 61) to prevent adapter from turning.

DIFFERENTIAL - TRAC-LOC (Continued)

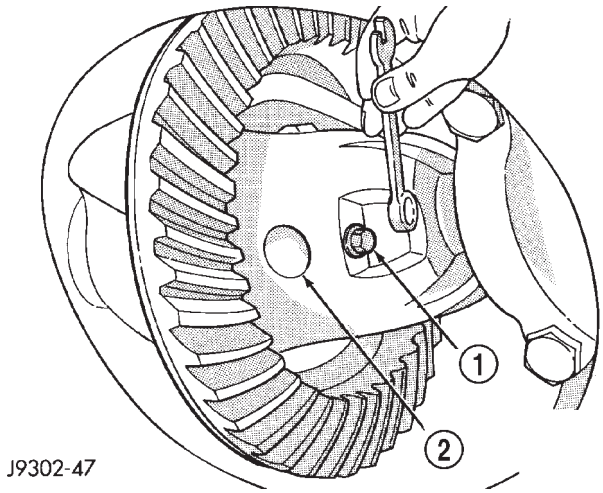

Fig. 58 Mate Shaft Lock Screw

1 - LOCK SCREW
2 - PINION GEAR MATE SHAFT

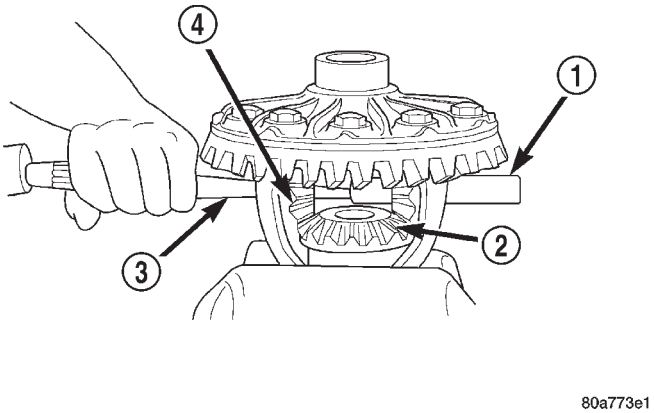

Fig. 59 Mate Shaft

1 - PINION MATE SHAFT
2 - SIDE GEAR
3 - DRIFT
4 - PINION MATE GEAR

(8) Install Forcing Screw C-6960-4 and tighten screw to 122 N·m (90 ft. lbs.) maximum to compress Belleville springs in clutch packs (Fig. 62).

(9) With a feeler gauge remove thrust washers from behind the pinion gears (Fig. 63).

(10) Insert Turning Bar C-6960-2 into the pinion mate shaft hole in the case (Fig. 64).

(11) Loosen the Forcing Screw in small increments until the clutch pack tension is relieved and the differential case can be turned using Turning Bar.

(12) Rotate differential case until the pinion gears can be removed.

(13) Remove pinion gears from differential case.

(14) Remove Forcing Screw, Step Plate and Threaded Adapter.

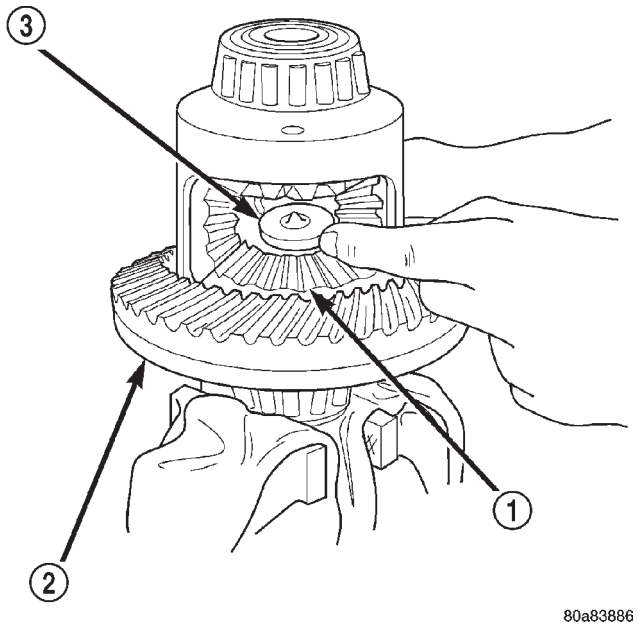

Fig. 60 Step Plate

1 - LOWER SIDE GEAR
2 - DIFFERENTIAL CASE
3 - STEP PLATE - C-6960-3

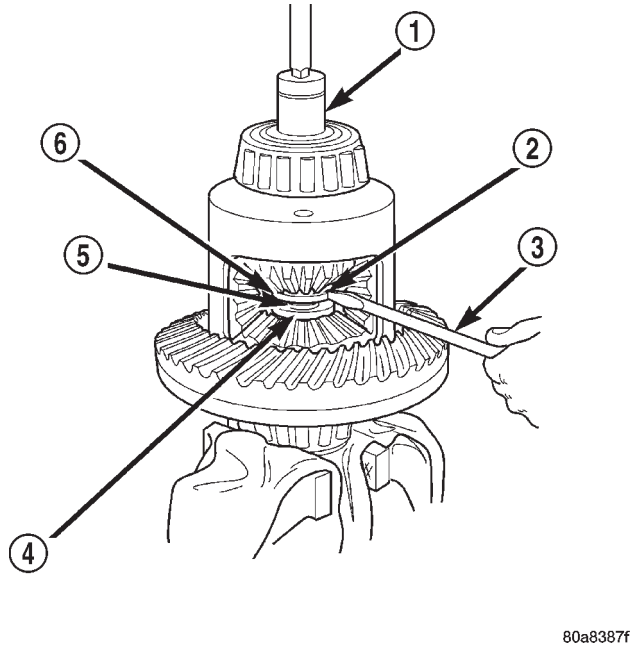

Fig. 61 Threaded Adapter Disc

1 - SOCKET
2 - SLOT IN ADAPTER
3 - SCREWDRIVER
4 - STEP PLATE - C-6960-3
5 - FORCING SCREW - C-6960-4
6 - THREADED ADAPTER DISC - C-6960-1

DIFFERENTIAL - TRAC-LOC (Continued)

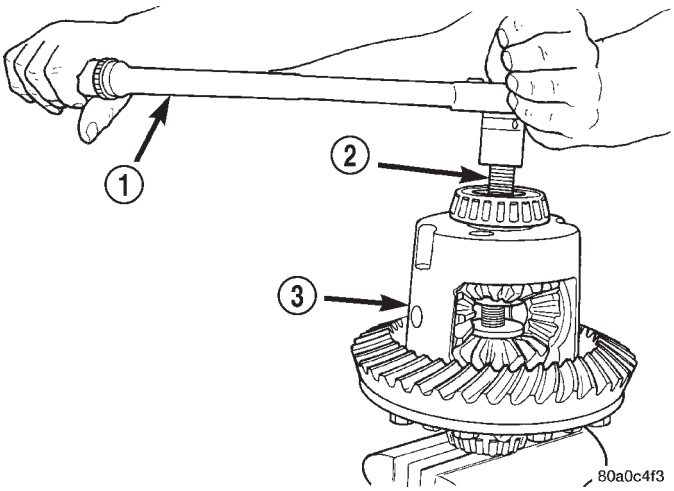

Fig. 62 Compress Belleville Spring

1 - TORQUE WRENCH
2 - TOOL ASSEMBLED
3 - DIFFERENTIAL CASE

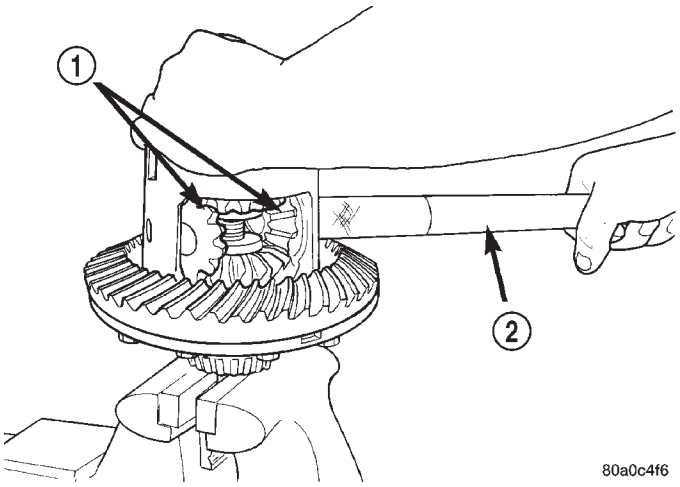

Fig. 64 Pinion Gear

1 - PINION GEARS
2 - TURNING BAR - C-6960-2

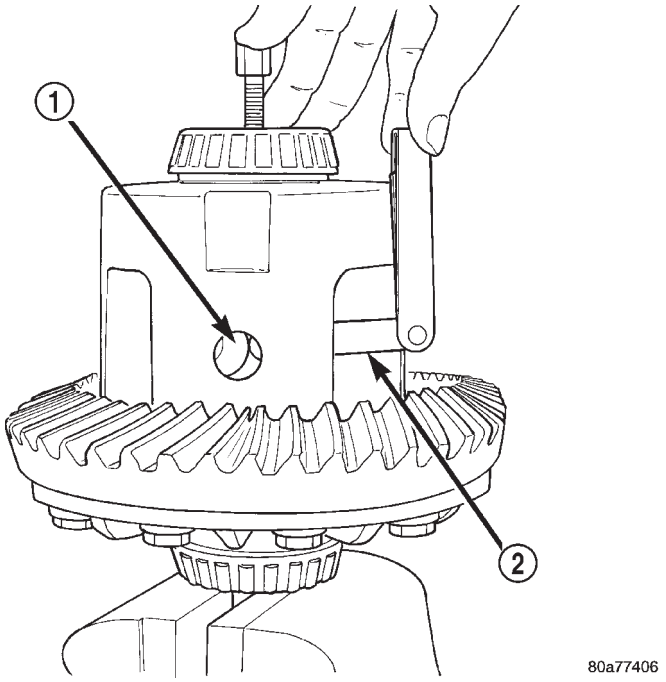

Fig. 63 Pinion Gear Thrust Washer

1 - THRUST WASHER
2 - FEELER GAUGE

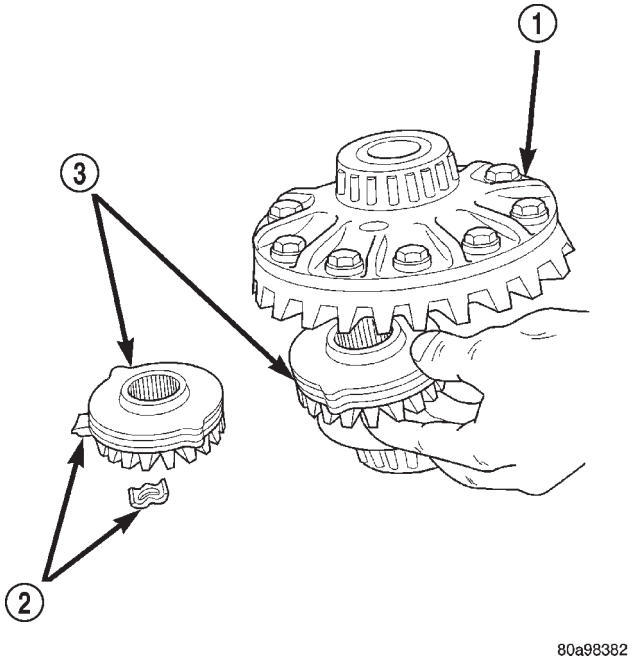

Fig. 65 Side Gear & Clutch Pack

1 - DIFFERENTIAL CASE
2 - RETAINER
3 - SIDE GEAR AND CLUTCH DISC PACK

(15) Remove top side gear, clutch pack retainer and clutch pack. Keep plates in correct order during removal (Fig. 65).

(16) Remove differential case from the Holding Fixture. Remove side gear, clutch pack retainer and clutch pack. Keep plates in correct order during removal.

ASSEMBLY

Clean all components in cleaning solvent. Dry components with compressed air. Inspect clutch pack plates for wear, scoring or damage. Replace both clutch packs if any one component in either pack is damaged. Inspect side gears and pinions. Replace any gear that is worn, cracked, chipped or damaged. Inspect differential case and pinion shaft. Replace if worn or damaged.

DIFFERENTIAL - TRAC-LOC (Continued)

Lubricate each component with gear lubricant before assembly.

(1) Assemble the clutch discs into packs and secure disc packs with retaining clips (Fig. 66).

NOTE: New Plates and discs with fiber coating (no grooves or lines) must be presoaked in Friction Modifier before assembly. Soak plates and discs for a minimum of 20 minutes.

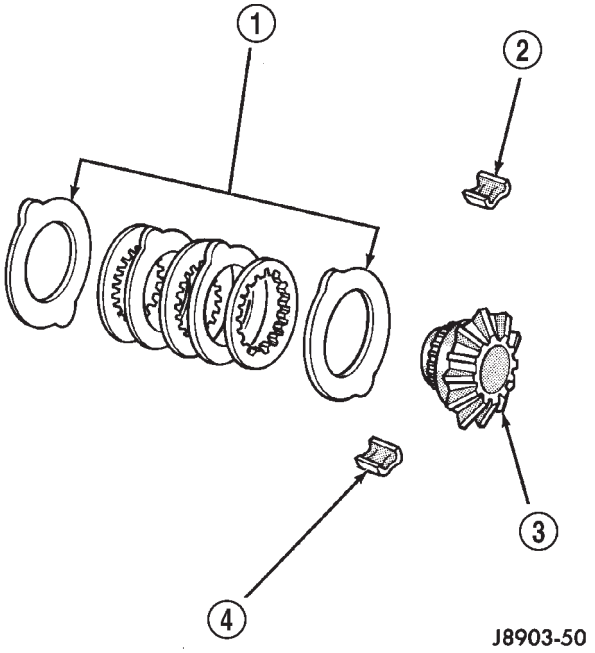

Fig. 66 Clutch Disc Pack

1 - CLUTCH PACK
2 - RETAINER
3 - SIDE GEAR
4 - RETAINER

(2) Position assembled clutch disc packs on the side gear hubs.

(3) Install clutch pack and side gear in the ring gear side of the differential case (Fig. 67). **Be sure clutch pack retaining clips remain in position and are seated in the case pockets.**

(4) Position the differential case on the Holding Fixture 6965.

(5) Install lubricated Step Plate C-6960-3 in lower side gear (Fig. 68).

(6) Install the upper side gear and clutch disc pack (Fig. 68).

(7) Hold assembly in position. Insert Threaded Adapter C-6960-1 into top side gear.

(8) Install Forcing Screw C-6960-4 and tighten screw to slightly compress clutch disc.

(9) Place pinion gears in position in side gears and verify that the pinion mate shaft hole is aligned.

(10) Rotate case with Turning Bar C-6960-2 until the pinion mate shaft holes in pinion gears align

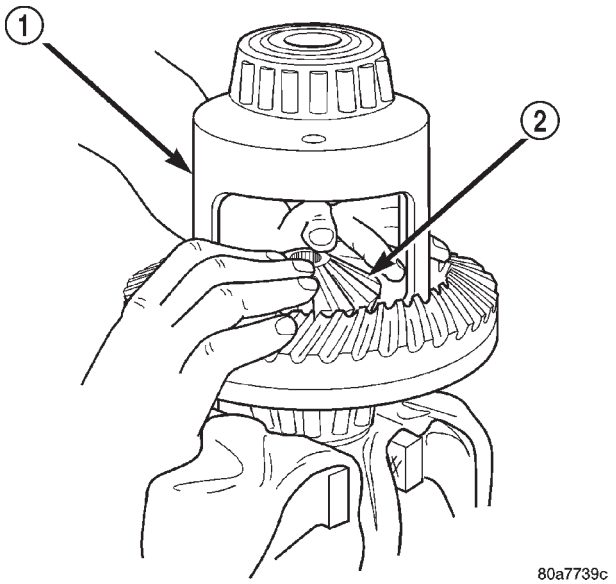

Fig. 67 Clutch Pack and Side Gear

1 - DIFFERENTIAL CASE
2 - SIDE GEAR AND CLUTCH PACK

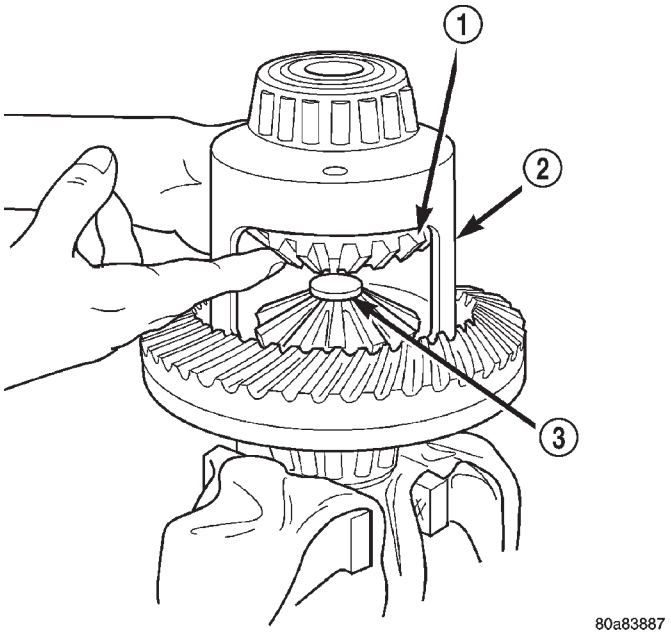

Fig. 68 Clutch Pack and Upper Side Gear

1 - SIDE GEAR AND CLUTCH PACK
2 - DIFFERENTIAL CASE
3 - STEP PLATE - C-6960-3

with holes in case. It may be necessary to slightly tighten the forcing screw in order to install the pinion gears.

(11) Tighten forcing screw to 122 N·m (90 ft. lbs.) maximum to compress the Belleville springs.

(12) Lubricate and install thrust washers behind pinion gears and align washers with a small screw

DIFFERENTIAL - TRAC-LOC (Continued)

driver. Insert mate shaft into each pinion gear to verify alignment.

(13) Remove Forcing Screw, Step Plate and Threaded Adapter.

(14) Install pinion gear mate shaft and align holes in shaft and case.

(15) Install pinion mate shaft lock screw finger tight to hold shaft during differential installation.

(16) Lubricate all differential components with hypoid gear lubricant.

DIFFERENTIAL CASE BEARINGS

REMOVAL

(1) Raise and support vehicle.

(2) Remove differential case from axle housing.

(3) Remove bearings from the differential case with Puller/Press C-293-PA, Adapter 8352 and Plug SP-3289 (Fig. 69).

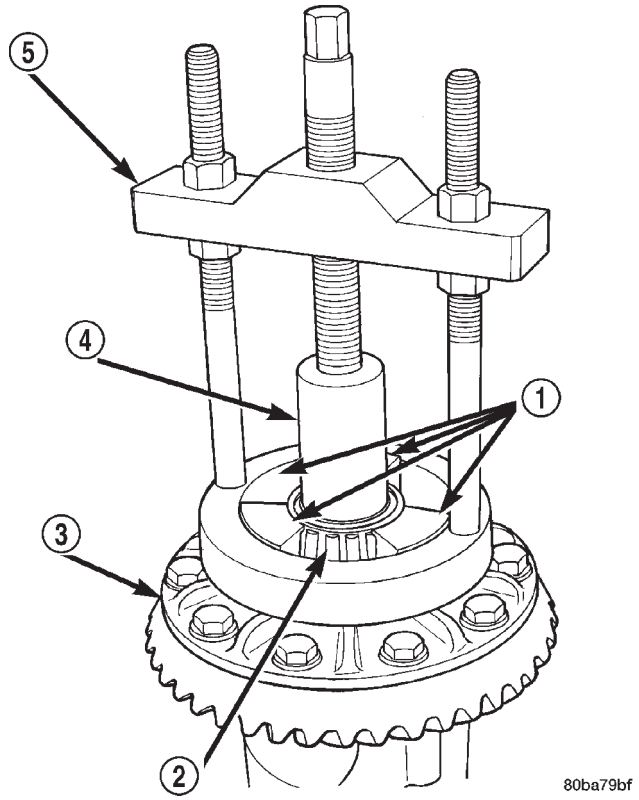

Fig. 69 Differential Bearing

1 - ADAPTERS - 8352
2 - BEARING
3 - DIFFERENTIAL
4 - PLUG - SP-3289
5 - PULLER - C-293-PA

INSTALLATION

NOTE: If differential side bearings or differential case are replaced, differential side bearing shim requirements may change. Refer to Adjustments (Differential Bearing Preload and Gear Backlash) for procedures.

(1) Install differential side bearings with Installer C-3716-A and Handle C-4171 (Fig. 70).

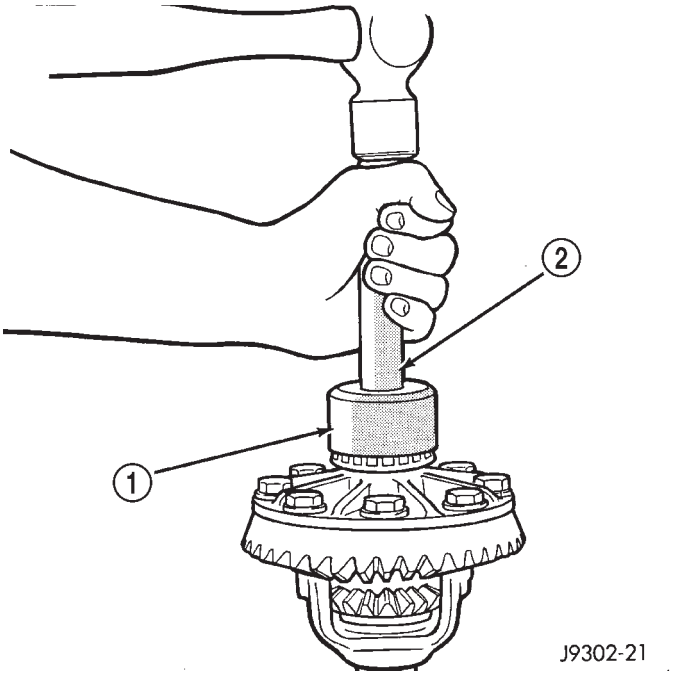

Fig. 70 Differential Side Bearing

1 - INSTALLER - C-3716-A
2 - HANDLE - C-4171

(2) Install differential in axle housing.

(3) Remove support and lower vehicle.

PINION GEAR/RING GEAR

REMOVAL

NOTE: The ring and pinion gears are serviced as a matched set. Never replace one gear without the other gear.

(1) Raise and support vehicle.

(2) Mark pinion yoke and propeller shaft for installation reference.

(3) Disconnect propeller shaft from pinion yoke and tie shaft to underbody.

(4) Remove differential from the housing.

PINION GEAR/RING GEAR (Continued)

(5) Place differential case in a vise with soft metal jaw.

(6) Remove bolts holding ring gear to differential case.

(7) Drive ring gear from differential case with a rawhide hammer (Fig. 71).

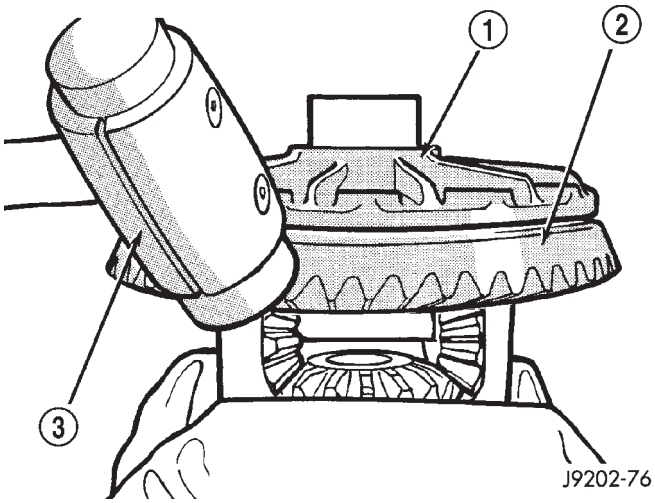

Fig. 71 Ring Gear

1 - CASE
2 - RING GEAR
3 - RAWHIDE HAMMER

(8) Hold the pinion yoke with Spanner Wrench 6958 and remove the pinion yoke nut and washer (Fig. 72).

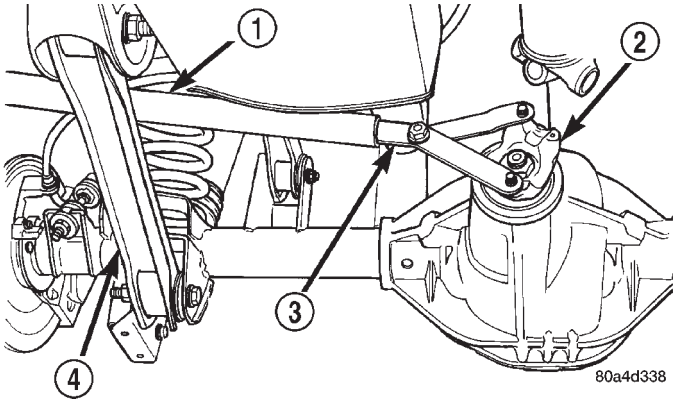

Fig. 72 Pinion Yoke Holder

1 - PIPE
2 - PINION YOKE
3 - SPANNER WRENCH - 6958
4 - LOWER CONTROL ARM

(9) Remove pinion yoke from pinion shaft with Remover C-452 and Wrench C-3281 (Fig. 73).

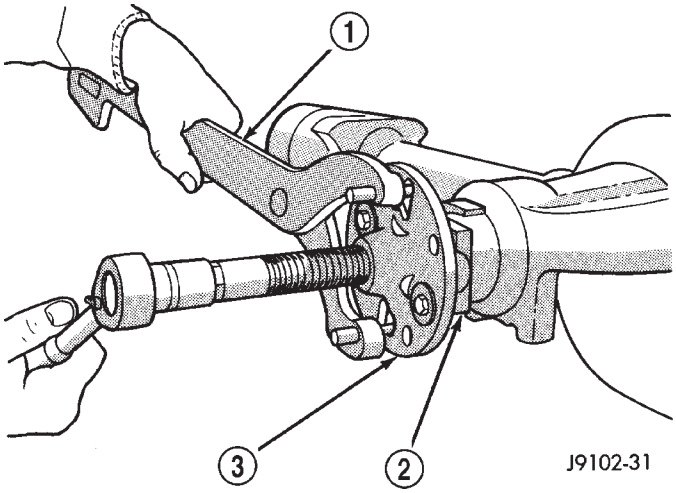

Fig. 73 Pinion Yoke

1 - WRENCH - C-3281
2 - YOKE
3 - REMOVER - C-452

(10) Remove pinion gear from housing (Fig. 74).

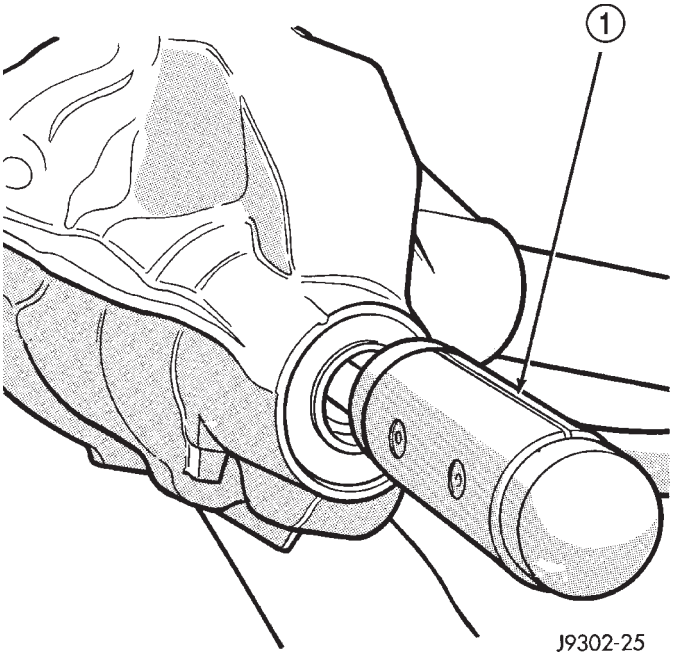

Fig. 74 Pinion Gear

1 - RAWHIDE HAMMER

PINION GEAR/RING GEAR (Continued)

(11) Remove pinion seal with Remover 7794-A and a slide hammer (Fig. 75).

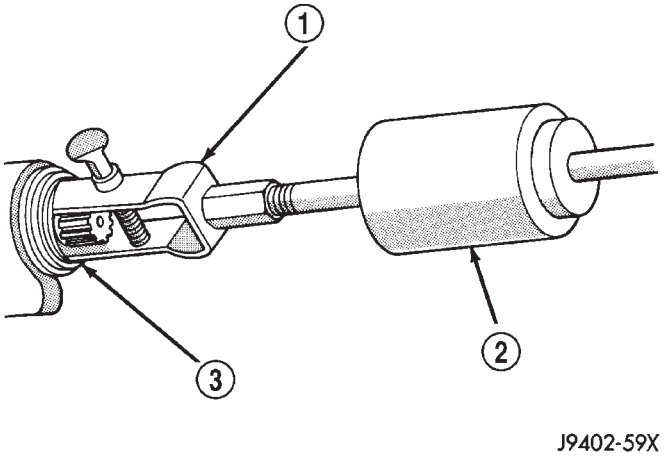

Fig. 75 Pinion Seal

1 - REMOVER - 7794-A
2 - SLIDE HAMMER
3 - PINION SEAL

(12) Remove oil slinger, if equipped, and front pinion bearing.

(13) Remove front pinion bearing cup with Remover C-4345 and Handle C-4171 (Fig. 76).

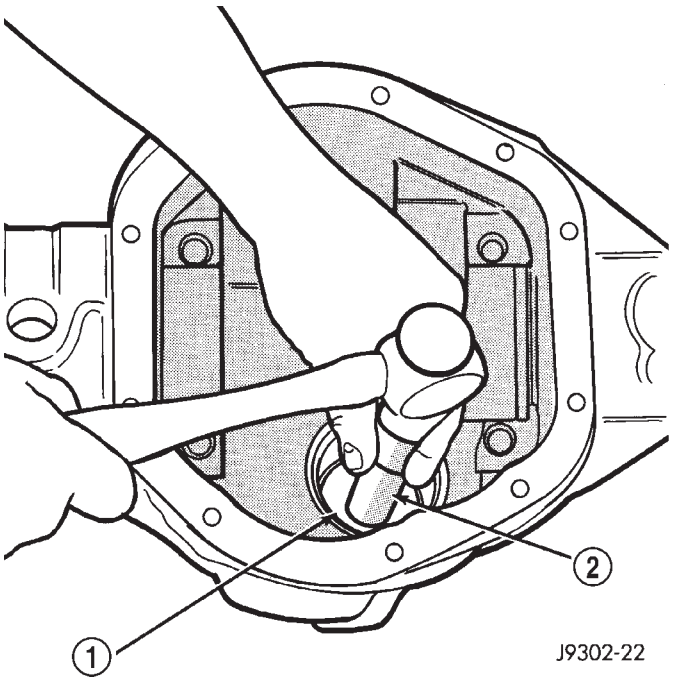

Fig. 76 Front Bearing Cup

1 - REMOVER - C-4345
2 - HANDLE - C-4171

(14) Remove rear bearing cup from housing (Fig. 77) with Remover D-149 and Handle C-4171.

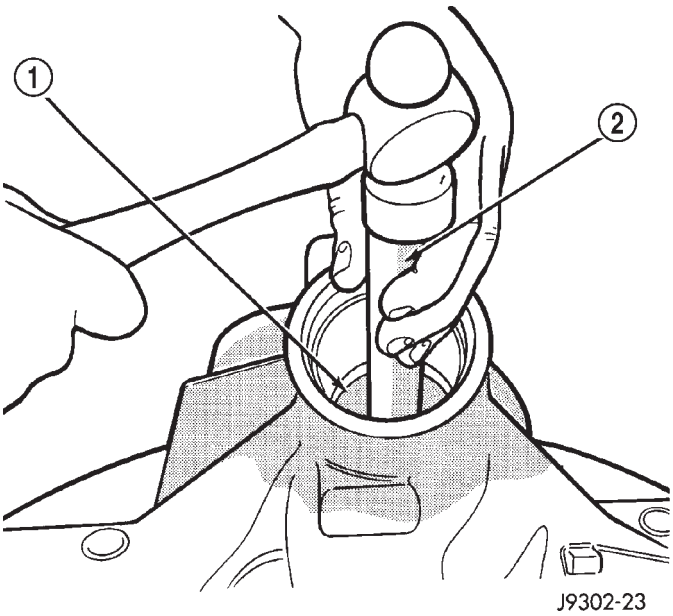

Fig. 77 Rear Bearing Cup

1 - REMOVER - D-149
2 - HANDLE - C-4171

(15) Remove collapsible preload spacer (Fig. 78).

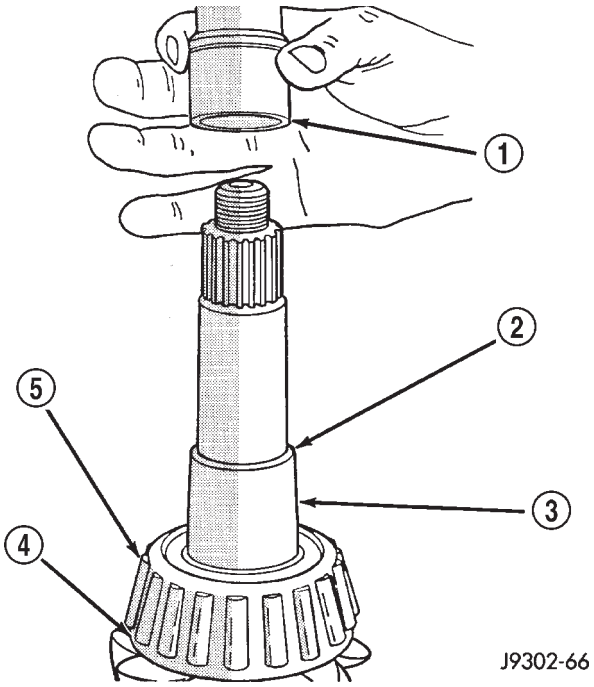

Fig. 78 Collapsible Spacer

1 - COLLAPSIBLE SPACER
2 - SHOULDER
3 - PINION GEAR
4 - OIL SLINGER
5 - REAR BEARING

PINION GEAR/RING GEAR (Continued)

(16) Remove rear bearing from the pinion with Puller/Press C-293-PA and Adapters C-293-40 (Fig. 79).

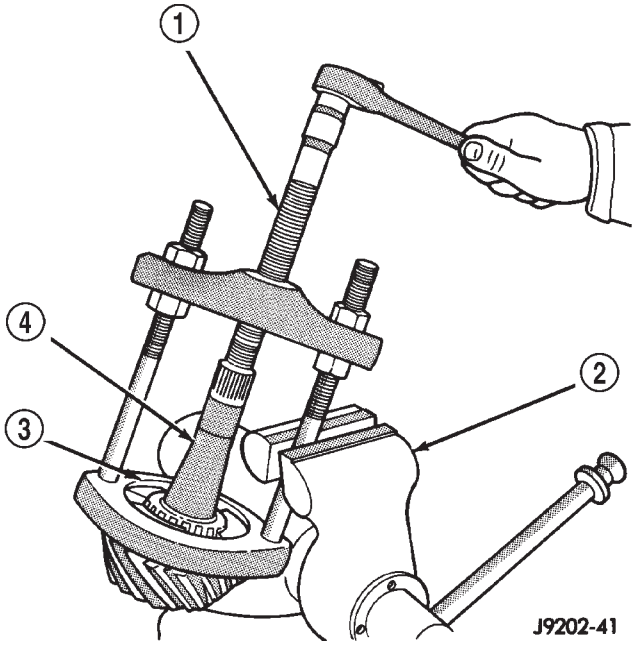

Fig. 79 Rear Bearing

1 - PULLER - C-293-PA
2 - VISE
3 - ADAPTERS - C-293-40
4 - PINION GEAR SHAFT

(17) Remove depth shims from the pinion gear shaft and record shim thickness.

INSTALLATION

NOTE: A pinion depth shim/oil slinger is placed between the rear pinion bearing cone and the pinion head to achieve proper ring gear and pinion mesh. If ring gear and pinion are reused, the pinion depth shim/oil slinger should not require replacement. Refer to Adjustment (Pinion Gear Depth) to select the proper thickness shim/oil slinger if ring and pinion gears are replaced.

(1) Apply Mopar® Door Ease or equivalent lubricant to outside surface of bearing cup.

(2) Install pinion rear bearing cup with Installer D-146 and Driver Handle C-4171 (Fig. 80) and verify cup is seated.

(3) Apply Mopar® Door Ease or equivalent lubricant to outside surface of bearing cup.

(4) Install pinion front bearing cup with Installer D-130 and Handle C-4171 (Fig. 81) and verify cup is seated.

(5) Install pinion front bearing and oil slinger, if equipped.

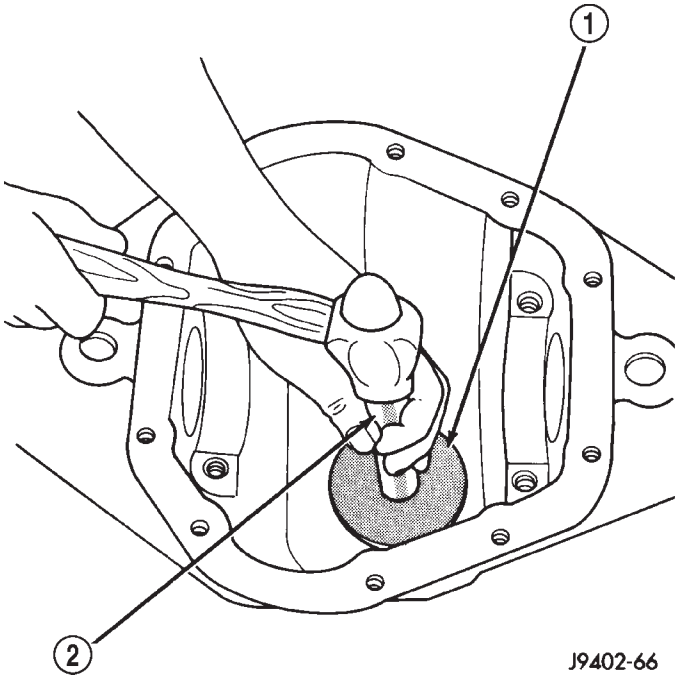

Fig. 80 Rear Pinion Bearing Cup

1 - INSTALLER
2 - HANDLE

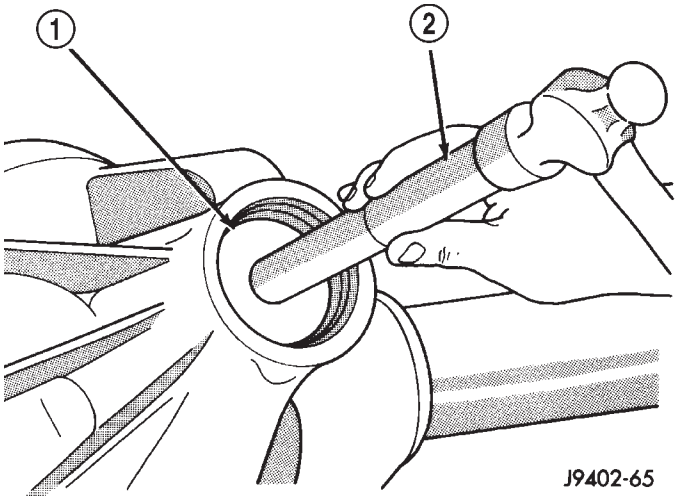

Fig. 81 Front Pinion Bearing Cup

1 - INSTALLER
2 - HANDLE

(6) Apply a light coating of gear lubricant on the lip of pinion seal. Install seal with Installer C-3972-A and Handle C-4171 (Fig. 82).

(7) Install depth shim on the pinion gear.

(8) Install rear bearing and slinger if equipped, on the pinion gear with Installer W-262 and a press (Fig. 83).

PINION GEAR/RING GEAR (Continued)

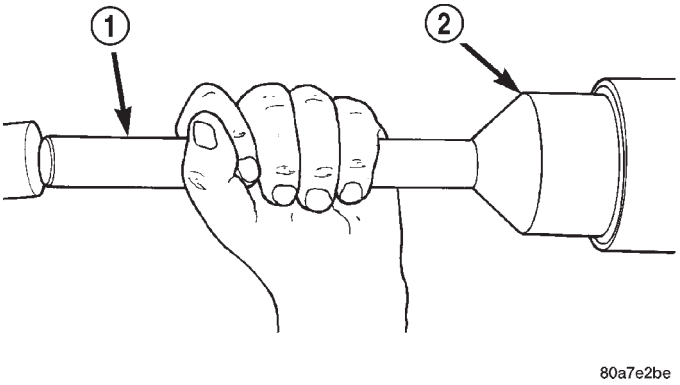

Fig. 82 Pinion Seal Installer

1 - SPECIAL TOOL C-4171
2 - SPECIAL TOOL C-3972–A

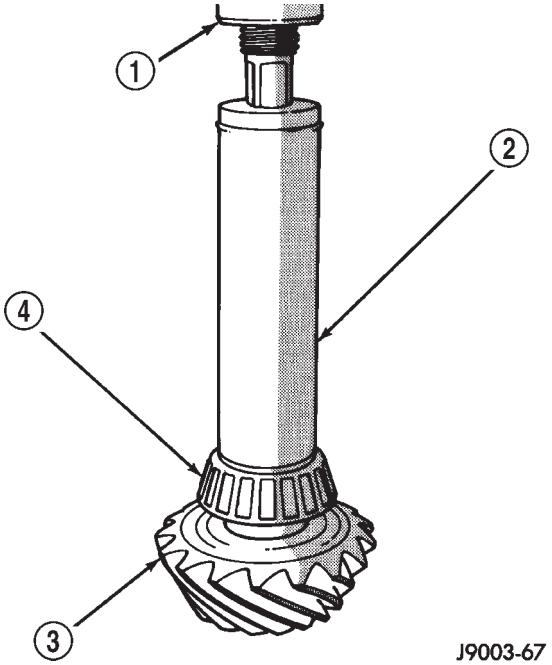

Fig. 83 Rear Pinion Bearing

1 - PRESS
2 - INSTALLATION TOOL
3 - DRIVE PINION GEAR
4 - DRIVE PINION GEAR SHAFT REAR BEARING

(9) Install a **new** collapsible preload spacer on pinion shaft and install pinion gear in the housing (Fig. 84).

(10) Install yoke with Installer C-3718 and Spanner Wrench 6958 (Fig. 85).

(11) Install the yoke washer and a new nut on the pinion gear and tighten the pinion nut until there is zero bearing end-play.

(12) Tighten the nut to 271 N·m (200 ft. lbs.).

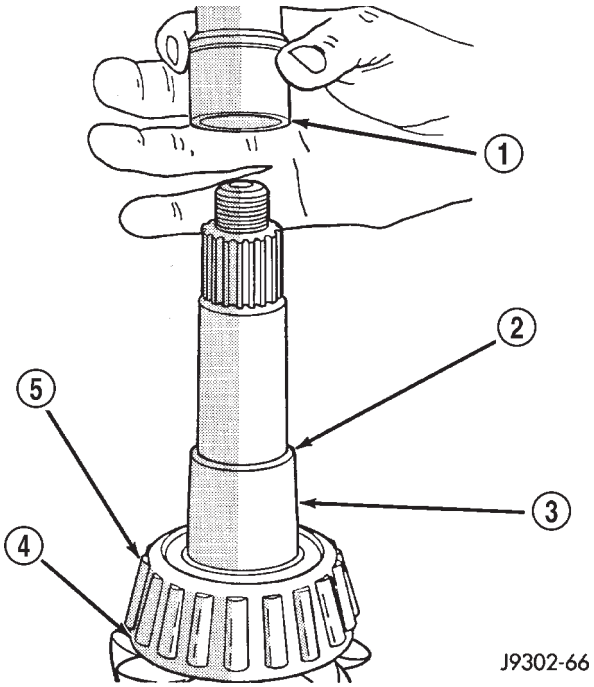

Fig. 84 Collapsible Preload Spacer

1 - COLLAPSIBLE SPACER
2 - SHOULDER
3 - PINION GEAR
4 - OIL SLINGER
5 - REAR BEARING

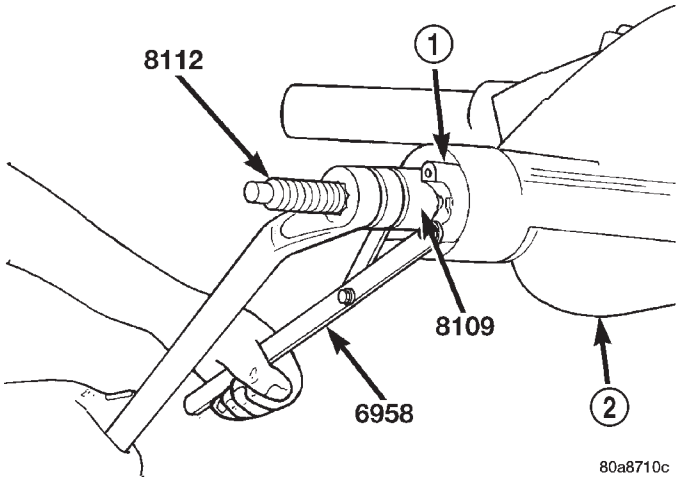

Fig. 85 Pinion Yoke Installation

1 - PINION YOKE
2 - AXLE HOUSING

CAUTION: Never loosen pinion gear nut to decrease pinion gear bearing rotating torque and never exceed specified preload torque. If preload torque or rotating torque is exceeded a new collapsible spacer must be installed.

PINION GEAR/RING GEAR (Continued)

(13) Using Spanner Wrench 6958 and a torque wrench set at 474 N·m (350 ft. lbs.), (Fig. 86) slowly tighten the nut in 6.8 N·m (5 ft. lbs.) increments until the rotating torque is achieved. Measure the rotating torque frequently to avoid over crushing the collapsible spacer (Fig. 87).

NOTE: If more than 474 N·m (350 ft. lbs.) torque is required to crush the collapsible spacer, the spacer is defective and must be replaced.

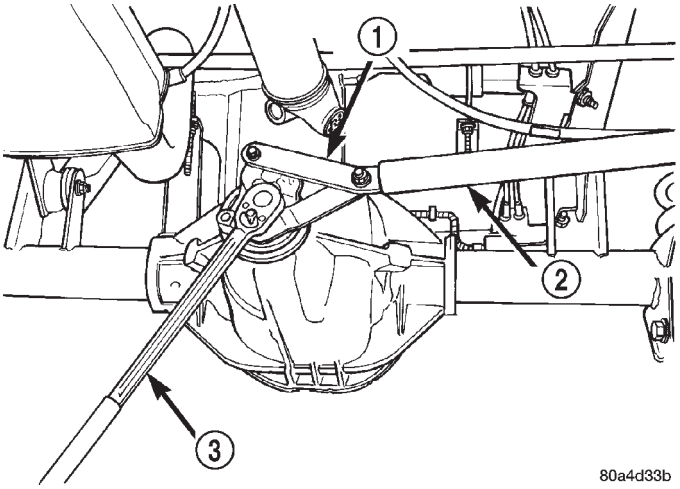

Fig. 86 Pinion Nut

1 - SPANNER WRENCH - 6958
2 - PIPE
3 - TORQUE WRENCH

(14) Check bearing rotating torque with a inch pound torque wrench (Fig. 87). The pinion gear rotating torque should be:

- Original Bearings: 1 to 2.25 N·m (10 to 20 in. lbs.).
- New Bearings: 1.7 to 3.4 N·m (15 to 30 in. lbs.).

(15) Invert the differential case and start two ring gear bolts. This will provide case-to-ring gear bolt hole alignment.

(16) Invert the differential case in the vise.

(17) Install new ring gear bolts and alternately tighten to 136 N·m (100 ft. lbs.) (Fig. 88).

CAUTION: Do not reuse the bolts that held the ring gear to the differential case. The bolts can fracture causing extensive damage.

(18) Install differential in housing and verify differential bearing preload, gear mesh and contact pattern. Refer to Ajustments for procedure.

(19) Install differential cover and fill with gear lubricant.

(20) Install the propeller shaft with the reference marks aligned.

(21) Remove supports and lower vehicle.

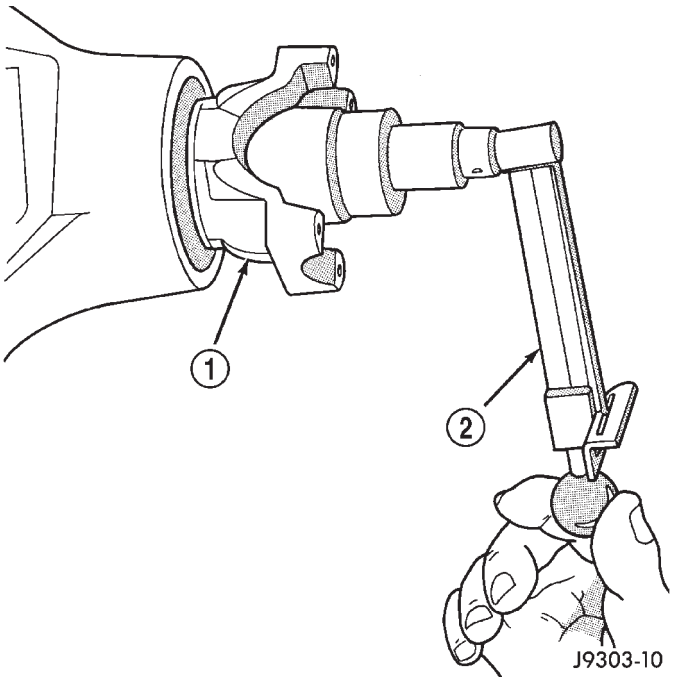

Fig. 87 Pinion Gear Rotating Torque

1 - PINION YOKE
2 -TORQUE WRENCH

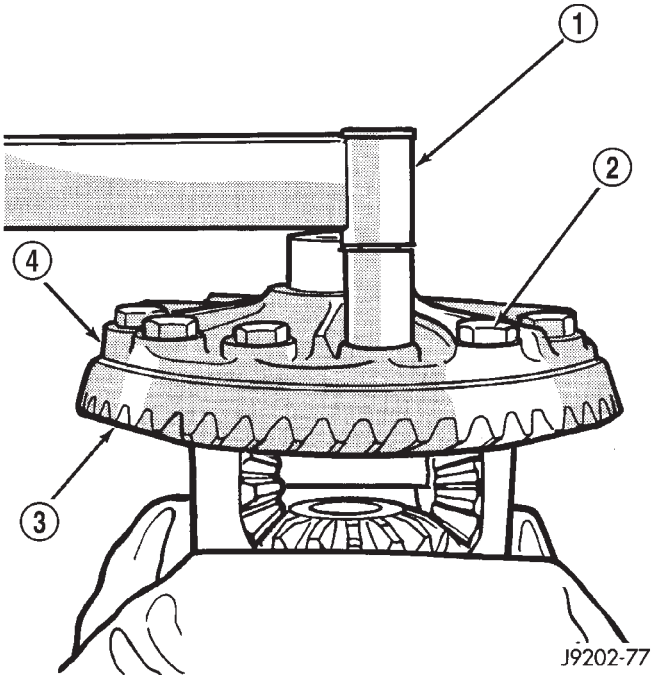

Fig. 88 Ring Gear

1 - TORQUE WRENCH
2 - RING GEAR BOLT
3 - RING GEAR
4 - CASE

REAR AXLE - 226RBA

TABLE OF CONTENTS

	page
REAR AXLE - 226RBA	
DESCRIPTION	87
OPERATION	87
DIAGNOSIS AND TESTING	89
AXLE	89
REMOVAL	92
INSTALLATION	93
ADJUSTMENTS	93
SPECIFICATIONS	102
SPECIAL TOOLS	102
AXLE SHAFTS	
REMOVAL	105
INSTALLATION	105
AXLE BEARINGS/SEALS	
REMOVAL	105
INSTALLATION	105
PINION SEAL	
REMOVAL	107
INSTALLATION	108
COLLAPSIBLE SPACER	
REMOVAL	109
INSTALLATION	109
DIFFERENTIAL	
REMOVAL	111
DISASSEMBLY	113
ASSEMBLY	113
INSTALLATION	113
DIFFERENTIAL - TRAC-LOK	
DIAGNOSIS AND TESTING	114
TRAC-LOK™	114
DISASSEMBLY	115
ASSEMBLY	117
DIFFERENTIAL CASE BEARINGS	
REMOVAL	119
INSTALLATION	119
PINION GEAR/RING GEAR	
REMOVAL	119
INSTALLATION	122

REAR AXLE - 226RBA

DESCRIPTION

The 226 Rear Beam-design Aluminum (RBA) axle housing has an aluminum center casting (differential housing) with axle shaft tubes extending from either side. The tubes are pressed into the differential housing to form a one-piece axle housing.

The integral type housing, hypoid gear design has the center-line of the pinion set below the center-line of the ring gear.

The axle has a vent hose to relieve internal pressure caused by lubricant vaporization and internal expansion.

The axles are equipped with semi–floating axle shafts, meaning that vehicle load is supported by the axle shaft and bearings. The axle shafts are retained by bearing retainer plates on the axles which are bolted to flanges at the outboard end of the axle tubes.

The cover provides a means for servicing the differential without removing the axle.

For vehicles equipped with ABS brakes, the axles have a tone ring pressed onto the axle shaft. Use care when removing axle shafts to ensure that the tone wheel or the wheel speed sensor are not damaged.

The 226 RBA axle has the assembly part number and gear ratio listed on a tag. The tag is attached to the differential housing by a cover bolt. Build date identification codes are stamped on the cover side of an axle shaft tube.

The differential case is a one-piece design. The differential pinion mate shaft is retained with a threaded pin. Differential bearing preload and ring gear backlash is adjusted by the use of selective spacer shims. Pinion bearing preload is set and maintained by the use of a collapsible spacer (Fig. 1).

Axles equipped with a Trac-Lok™ differential are optional. A Trac-Lok differential has a one-piece differential case, and the same internal components as a standard differential, plus two clutch disc packs.

Axles equipped with a Vari-Lok™ differential are optional. A Vari-Lok™ differential has a one-piece differential case which contains the gerotor pump assembly and the clutch mechinism. The Vari-Lok™ unit is serviced only as an assembly.

OPERATION

The axle receives power from the transfer case through the front propeller shaft. The front propeller shaft is connected to the pinion gear which rotates the differential through the gear mesh with the ring gear bolted to the differential case. The engine power is transmitted to the axle shafts through the pinion

REAR AXLE - 226RBA (Continued)

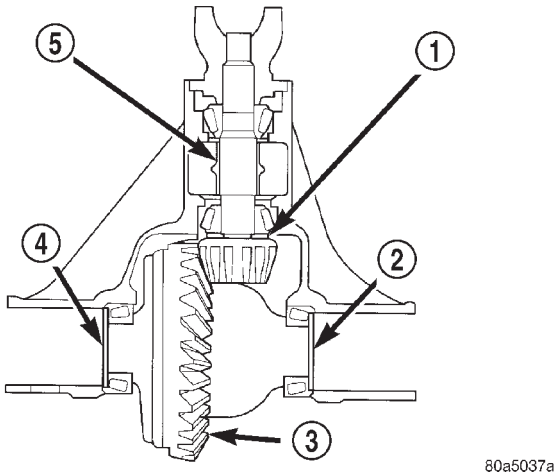

Fig. 1 Shim Locations

1 - PINION GEAR DEPTH SHIM
2 - DIFFERENTIAL BEARING SHIM
3 - RING GEAR
4 - DIFFERENTIAL BEARING SHIM
5 - COLLAPSIBLE SPACER

mate and side gears. The side gears are splined to the axle shafts.

STANDARD DIFFERENTIAL

During straight-ahead driving, the differential pinion gears do not rotate on the pinion mate shaft. This occurs because input torque applied to the gears is divided and distributed equally between the two side gears. As a result, the pinion gears revolve with the pinion mate shaft but do not rotate around it (Fig. 2).

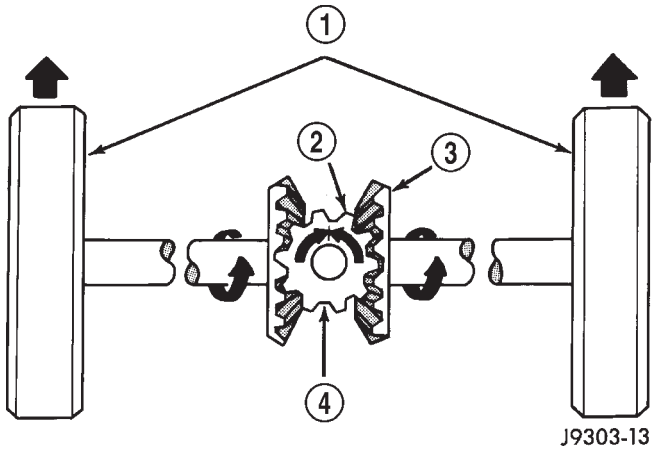

Fig. 2 Differential Operation-Straight Ahead Driving

1 - IN STRAIGHT AHEAD DRIVING EACH WHEEL ROTATES AT 100% OF CASE SPEED
2 - PINION GEAR
3 - SIDE GEAR
4 - PINION GEARS ROTATE WITH CASE

When turning corners, the outside wheel must travel a greater distance than the inside wheel to complete a turn. The difference must be compensated for to prevent the tires from scuffing and skidding through turns. To accomplish this, the differential allows the axle shafts to turn at unequal speeds (Fig. 3). In this instance, the input torque applied to the pinion gears is not divided equally. The pinion gears now rotate around the pinion mate shaft in opposite directions. This allows the side gear and axle shaft attached to the outside wheel to rotate at a faster speed.

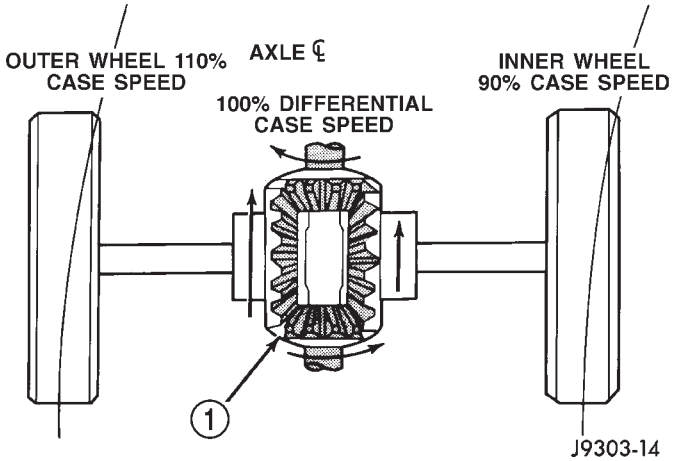

Fig. 3 Differential Operation-On Turns

1 - PINION GEARS ROTATE ON PINION SHAFT

TRAC-LOK™ DIFFERENTIAL

The Trac-lok™ clutches are engaged by two concurrent forces. The first being the preload force exerted through Belleville spring washers within the clutch packs. The second is the separating forces generated by the side gears as torque is applied through the ring gear (Fig. 4).

The Trac-lok™ design provides the differential action needed for turning corners and for driving straight ahead during periods of unequal traction. When one wheel looses traction, the clutch packs transfer additional torque to the wheel having the most traction. Trac-lok™ differentials resist wheel spin on bumpy roads and provide more pulling power when one wheel looses traction. Pulling power is provided continuously until both wheels loose traction. If both wheels slip due to unequal traction, Trac-lok™ operation is normal. In extreme cases of differences of traction, the wheel with the least traction may spin.

VARI-LOK™ DIFFERENTIAL

In a standard differential, if one wheel spins, the opposite wheel will generate only as much torque as the spinning wheel.

A gerotor pump and clutch pack are used to provide the torque transfer capability. One axle shaft is

REAR AXLE - 226RBA (Continued)

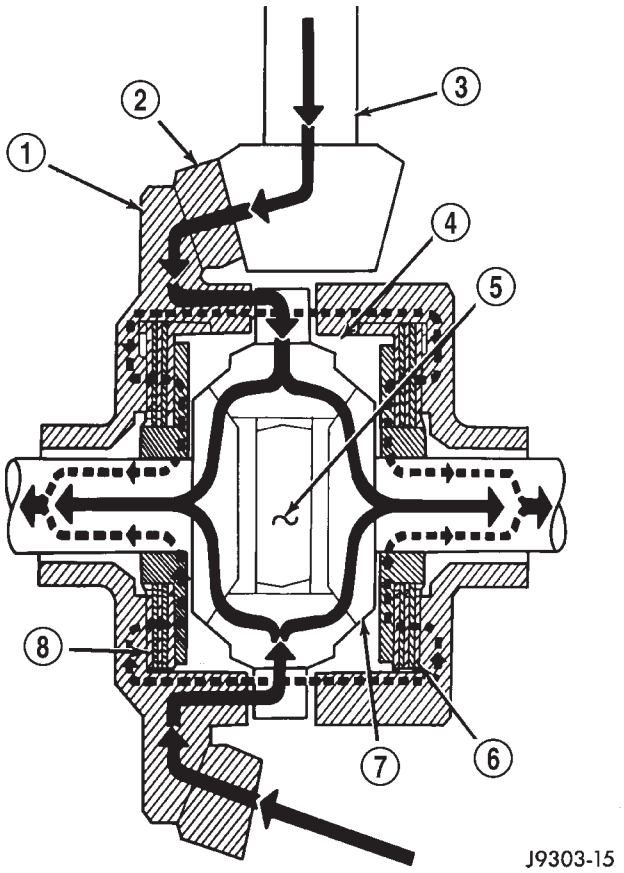

Fig. 4 Power-lok™ Limited Slip Differential

1 - CASE
2 - RING GEAR
3 - DRIVE PINION
4 - PINION GEAR
5 - MATE SHAFT
6 - CLUTCH PACK
7 - SIDE GEAR
8 - CLUTCH PACK

splined to the gerotor pump and one of the differential side gears, which provides the input to the pump. As a wheel begins to lose traction, the speed differential is transmitted from one side of the differential to the other through the side gears. The motion of one side gear relative to the other turns the inner rotor of the pump. Since the outer rotor of the pump is grounded to the differential case, the inner and outer rotors are now moving relative to each other and therefore creates pressure in the pump. The tuning of the front and rear axle orifices and valves inside the gerotor pump is unique and each system includes a torque-limiting pressure relief valve to protect the clutch pack, which also facilitates vehicle control under extreme side-to-side traction variations. The resulting pressure is applied to the clutch pack and the transfer of torque is completed.

Under conditions in which opposite wheels are on surfaces with widely different friction characteristics, Vari-lok™ delivers far more torque to the wheel on the higher traction surface than do conventional Trac-lok™ systems. Because conventional Trac-lok™ differentials are initially pre-loaded to assure torque transfer, normal driving (where inner and outer wheel speeds differ during cornering, etc.) produces torque transfer during even slight side-to-side speed variations. Since these devices rely on friction from this preload to transfer torque, normal use tends to cause wear that reduces the ability of the differential to transfer torque over time. By design, the Vari-lok™ system is less subject to wear, remaining more consistent over time in its ability to transfer torque. The coupling assembly is serviced as a unit. From a service standpoint the coupling also benefits from using the same lubricant supply as the ring and pinion gears.

DIAGNOSIS AND TESTING - AXLE

GEAR NOISE

Axle gear noise can be caused by insufficient lubricant, incorrect backlash, tooth contact, worn/damaged gears, or the carrier housing not having the proper offset and squareness.

Gear noise usually happens at a specific speed range. The noise can also occur during a specific type of driving condition. These conditions are acceleration, deceleration, coast, or constant load.

When road testing, first warm-up the axle fluid by driving the vehicle at least 5 miles and then accelerate the vehicle to the speed range where the noise is the greatest. Shift out-of-gear and coast through the peak-noise range. If the noise stops or changes greatly:

- Check for insufficient lubricant.
- Incorrect ring gear backlash.
- Gear damage.

Differential side gears and pinions can be checked by turning the vehicle. They usually do not cause noise during straight-ahead driving when the gears are unloaded. The side gears are loaded during vehicle turns. A worn pinion mate shaft can also cause a snapping or a knocking noise.

BEARING NOISE

The axle shaft, differential and pinion bearings can all produce noise when worn or damaged. Bearing noise can be either a whining, or a growling sound.

Pinion bearings have a constant-pitch noise. This noise changes only with vehicle speed. Pinion bearing noise will be higher pitched because it rotates at a faster rate. Drive the vehicle and load the differential. If bearing noise occurs, the rear pinion bearing is the source of the noise. If the bearing noise is

REAR AXLE - 226RBA (Continued)

heard during a coast, the front pinion bearing is the source.

Worn or damaged differential bearings usually produce a low pitch noise. Differential bearing noise is similar to pinion bearing noise. The pitch of differential bearing noise is also constant and varies only with vehicle speed.

Axle shaft bearings produce noise and vibration when worn or damaged. The noise generally changes when the bearings are loaded. Road test the vehicle. Turn the vehicle sharply to the left and to the right. This will load the bearings and change the noise level. Where axle bearing damage is slight, the noise is usually not noticeable at speeds above 30 mph.

LOW SPEED KNOCK

Low speed knock is generally caused by a worn U-joint or by worn side–gear thrust washers. A worn pinion shaft bore will also cause low speed knock.

VIBRATION

Vibration at the rear of the vehicle is usually caused by a:

- Damaged drive shaft.
- Missing drive shaft balance weight(s).
- Worn or out-of-balance wheels.
- Loose wheel lug nuts.
- Worn U-joint(s).
- Loose/broken springs.
- Damaged axle shaft bearing(s).
- Loose pinion gear nut.
- Excessive pinion yoke run out.
- Bent axle shaft(s).

Check for loose or damaged front-end components or engine/transmission mounts. These components can contribute to what appears to be a rearend vibration. Do not overlook engine accessories, brackets and drive belts.

All driveline components should be examined before starting any repair.

(Refer to 22 - TIRES/WHEELS - DIAGNOSIS AND TESTING)

DRIVELINE SNAP

A snap or clunk noise when the vehicle is shifted into gear (or the clutch engaged), can be caused by:

- High engine idle speed.
- Transmission shift operation.
- Loose engine/transmission/transfer case mounts.
- Worn U-joints.
- Loose spring mounts.
- Loose pinion gear nut and yoke.
- Excessive ring gear backlash.
- Excessive side gear to case clearance.

The source of a snap or a clunk noise can be determined with the assistance of a helper. Raise the vehicle on a hoist with the wheels free to rotate. Instruct the helper to shift the transmission into gear. Listen for the noise, a mechanics stethoscope is helpful in isolating the source of a noise.

DIAGNOSTIC CHART

Condition	Possible Causes	Correction
Wheel Noise	1. Wheel loose.	1. Tighten loose nuts.
	2. Faulty, brinelled wheel bearing.	2. Replace bearing.
Axle Shaft Noise	1. Misaligned axle tube.	1. Inspect axle tube alignment. Correct as necessary.
	2. Bent or sprung axle shaft.	2. Inspect and correct as necessary.
	3. End-play in pinion bearings.	3. Refer to pinion pre-load information and correct as necessary.
	4. Excessive gear backlash between the ring gear and pinion.	4. Check adjustment of the ring gear and pinion backlash. Correct as necessary.
	5. Improper adjustment of pinion gear bearings.	5. Adjust the pinion bearings pre-load.
	6. Loose pinion yoke nut.	6. Tighten the pinion yoke nut.
	7. Scuffed gear tooth contact surfaces.	7. Inspect and replace as necessary.

REAR AXLE - 226RBA (Continued)

Condition	Possible Causes	Correction
Axle Shaft Broke	1. Misaligned axle tube.	1. Replace the broken shaft after correcting tube mis-alignment.
	2 Vehicle overloaded.	2. Replace broken shaft and avoid excessive weight on vehicle.
	3. Erratic clutch operation.	3. Replace broken shaft and avoid or correct erratic clutch operation.
	4. Grabbing clutch.	4. Replace broken shaft and inspect and repair clutch as necessary.
Differential Cracked	1. Improper adjustment of the differential bearings.	1. Replace case and inspect gears and bearings for further damage. Set differential bearing pre-load properly.
	2. Excessive ring gear backlash.	2. Replace case and inspect gears and bearings for further damage. Set ring gear backlash properly.
	3. Vehicle overloaded.	3. Replace case and inspect gears and bearings for further damage. Avoid excessive vehicle weight.
	4. Erratic clutch operation.	4. Replace case and inspect gears and bearings for further damage. Avoid erratic use of clutch.
Differential Gears Scored	1. Insufficient lubrication.	1. Replace scored gears. Fill differential with the correct fluid type and quantity.
	2. Improper grade of lubricant.	2. Replace scored gears. Fill differential with the correct fluid type and quantity.
	3. Excessive spinning of one wheel/tire.	3. Replace scored gears. Inspect all gears, pinion bores, and shaft for damage. Service as necessary.
Loss Of Lubricant	1. Lubricant level too high.	1. Drain lubricant to the correct level.
	2. Worn axle shaft seals.	2. Replace seals.
	3. Cracked differential housing.	3. Repair as necessary.
	4. Worn pinion seal.	4. Replace seal.
	5. Worn/scored yoke.	5. Replace yoke and seal.
	6. Axle cover not properly sealed.	6. Remove, clean, and re-seal cover.
Axle Overheating	1. Lubricant level low.	1. Fill differential to correct level.
	2. Improper grade of lubricant.	2. Fill differential with the correct fluid type and quantity.
	3. Bearing pre-loads too high.	3. Re-adjust bearing pre-loads.
	4. Insufficient ring gear backlash.	4. Re-adjust ring gear backlash.

REAR AXLE - 226RBA (Continued)

Condition	Possible Causes	Correction
Gear Teeth Broke	1. Overloading.	1. Replace gears. Examine other gears and bearings for possible damage.
	2. Erratic clutch operation.	2. Replace gears and examine the remaining parts for damage. Avoid erratic clutch operation.
	3. Ice-spotted pavement.	3. Replace gears and examine remaining parts for damage.
	4. Improper adjustments.	4. Replace gears and examine remaining parts for damage. Ensure ring gear backlash is correct.
Axle Noise	1. Insufficient lubricant.	1. Fill differential with the correct fluid type and quantity.
	2. Improper ring gear and pinion adjustment.	2. Check ring gear and pinion contact pattern.
	3. Unmatched ring gear and pinion.	3. Replace gears with a matched ring gear and pinion.
	4. Worn teeth on ring gear and/or pinion.	4. Replace ring gear and pinion.
	5. Loose pinion bearings.	5. Adjust pinion bearing pre-load.
	6. Loose differential bearings.	6. Adjust differential bearing pre-load.
	7. Mis-aligned or sprung ring gear.	7. Measure ring gear run-out. Replace components as necessary.
	8. Loose differential bearing cap bolts.	8. Inspect differential components and replace as necessary. Ensure that the bearing caps are torqued tot he proper specification.
	9. Housing not machined properly.	9. Replace housing.

REMOVAL

(1) Raise and support the vehicle.

(2) Position a lifting device under the axle and secure axle.

(3) Remove the wheels and tires.

(4) Remove brake rotors (Refer to 5 - BRAKES/HYDRAULIC/MECHANICAL/ROTORS - REMOVAL) and calipers (Refer to 5 - BRAKES/HYDRAULIC/MECHANICAL/DISC BRAKE CALIPERS - REMOVAL) from the axle.

(5) Disconnect parking brake cables from brackets and lever.

(6) Remove wheel speed sensors. (Refer to 5 - BRAKES/ELECTRICAL/REAR WHEEL SPEED SENSOR - REMOVAL)

(7) Disconnect the brake hose at the axle junction block. Do not disconnect the brake hydraulic lines at the calipers.

(8) Disconnect the vent hose from the axle shaft tube.

(9) Mark propeller shaft and yokes for installation reference.

(10) Remove propeller shaft. (Refer to 3 - DIFFERENTIAL & DRIVELINE/PROPELLER SHAFT/PROPELLER SHAFT - REMOVAL)

(11) Disconnect stabilizer bar links.

(12) Remove nut holding upper suspension arm to the rear axle ball joint.

(13) Using Remover 8278, separate the rear axle ball joint from the upper suspension arm (Fig. 5).

(14) Disconnect shock absorbers from axle.

(15) Disconnect track bar.

(16) Disconnect lower suspension arms from the axle brackets.

(17) Separate the axle from the vehicle.

REAR AXLE - 226RBA (Continued)

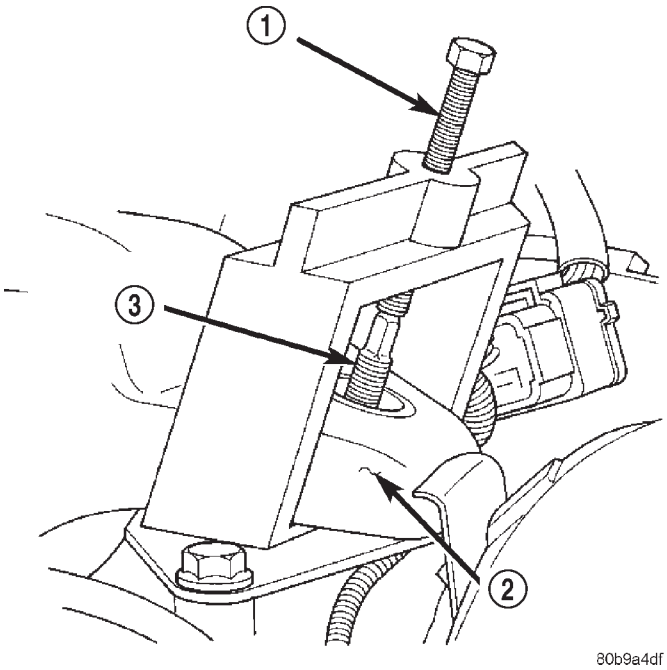

Fig. 5 Rear Ball Joint

1 - REMOVER - 8278
2 - UPPER SUSPENSION ARM
3 - BALL JOINT STUD

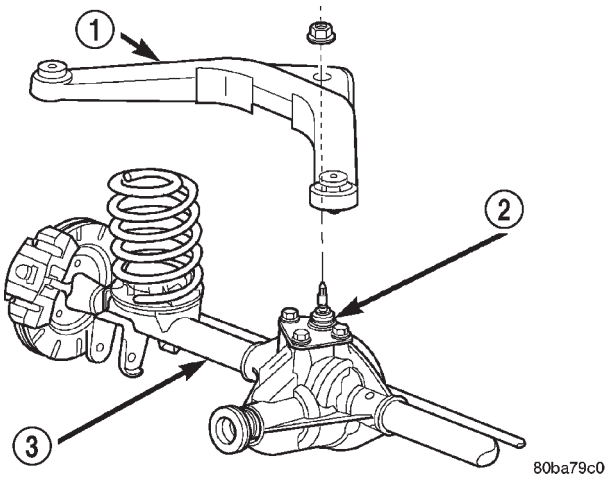

Fig. 6 Rear Suspention

1 - UPPER SUSPENSION ARM
2 - REAR AXLE BALL JOINT
3 - REAR AXLE

INSTALLATION

NOTE: The weight of the vehicle must be supported by the springs before suspension arms and track bar fasteners can be tightened. If the springs are not at their normal ride position, vehicle ride height and handling could be affected.

(1) Raise the axle with lifting device and align coil springs.

(2) Position the lower suspension arms on the axle brackets. Install nuts and bolts, do not tighten bolts at this time.

(3) Install the upper suspension arm to the rear axle ball joint.

(4) Install nut to hold the upper suspension arm to the rear axle ball joint. Torque the nut to 122 N·m (90 ft.lbs.) (Fig. 6).

(5) Install track bar and attachment bolts, do not tighten bolts at this time.

(6) Install shock absorbers and tighten nuts to 60 N·m (44 ft. lbs.).

(7) Install stabilizer bar links and tighten nuts to 36 N·m (27 ft. lbs.).

(8) Install wheel speed sensors. (Refer to 5 - BRAKES/ELECTRICAL/REAR WHEEL SPEED SENSOR - INSTALLATION)

(9) Connect parking brake cable to brackets and lever.

(10) Install brake rotors (Refer to 5 - BRAKES/HYDRAULIC/MECHANICAL/ROTORS - INSTALLATION) and calipers. (Refer to 5 - BRAKES/HYDRAULIC/MECHANICAL/DISC BRAKE CALIPERS - INSTALLATION)

(11) Connect the brake hose to the axle junction block.

(12) Install axle vent hose.

(13) Align propeller shaft and pinion yoke reference marks. Install U-joint straps and bolts. Tighten to 19 N·m (14 ft. lbs.).

(14) Install the wheels and tires.

(15) Add gear lubricant, if necessary.

(16) Remove support and lower the vehicle.

(17) Tighten lower suspension arm bolts to 177 N·m (130 ft. lbs.).

(18) Tighten track bar bolts to 100 N·m (74 ft. lbs.).

ADJUSTMENTS

Ring and pinion gears are supplied as matched sets only. The identifying numbers for the ring and pinion gear are etched into the face of each gear (Fig. 7). A plus (+) number, minus (–) number or zero (0) is etched into the face of the pinion gear. This number is the amount (in thousandths of an inch) the depth varies from the standard depth setting of a pinion etched with a (0). The standard setting from the center line of the ring gear to the back face of the pinion is 109.52 mm (4.312 in.). The standard depth provides the best gear tooth contact pattern. Refer to Backlash and Contact Pattern in this section for additional information.

Compensation for pinion depth variance is achieved with a select shim/oil baffle. The shims are

REAR AXLE - 226RBA (Continued)

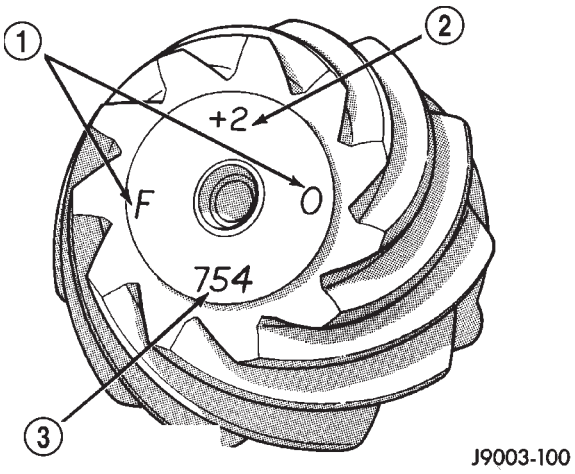

Fig. 7 Pinion Gear ID Numbers

1 - PRODUCTION NUMBERS
2 - DRIVE PINION GEAR DEPTH VARIANCE
3 - GEAR MATCHING NUMBER (SAME AS RING GEAR NUMBER)

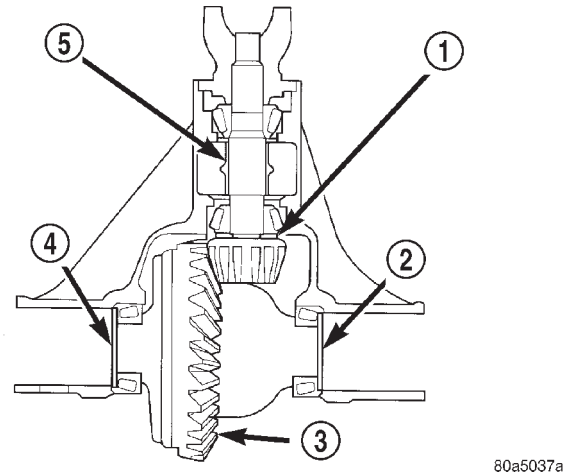

Fig. 8 Adjustment Shim Locations

1 - PINION GEAR DEPTH SHIM/OIL BAFFLE
2 - DIFFERENTIAL BEARING SHIM
3 - RING GEAR
4 - DIFFERENTIAL BEARING SHIM
5 - COLLAPSIBLE SPACER

placed between the rear pinion bearing and the pinion gear head (Fig. 8).

If a new gear set is being installed, note the depth variance etched into both the original and replacement pinion. Add or subtract this number from the thickness of the original depth shim/oil slinger to compensate for the difference in the depth variances. Refer to the Pinion Gear Depth Variance chart.

Note where Old and New Pinion Marking columns intersect. Intersecting figure represents plus or minus the amount needed.

Note the etched number on the face of the pinion gear head (–1, –2, 0, +1, +2, etc.). The numbers represent thousands of an inch deviation from the standard. If the number is negative, add that value to the required thickness of the depth shims. If the number is positive, subtract that value from the thickness of the depth shim. If the number is 0 no change is necessary.

PINION GEAR DEPTH VARIANCE

Original Pinion Gear Depth Variance	Replacement Pinion Gear Depth Variance								
	−4	−3	−2	−1	0	+1	+2	+3	+4
+4	+0.008	+0.007	+0.006	+0.005	+0.004	+0.003	+0.002	+0.001	0
+3	+0.007	+0.006	+0.005	+0.004	+0.003	+0.002	+0.001	0	−0.001
+2	+0.006	+0.005	+0.004	+0.003	+0.002	+0.001	0	−0.001	−0.002
+1	+0.005	+0.004	+0.003	+0.002	+0.001	0	−0.001	−0.002	−0.003
0	+0.004	+0.003	+0.002	+0.001	0	−0.001	−0.002	−0.003	−0.004
−1	+0.003	+0.002	+0.001	0	−0.001	−0.002	−0.003	−0.004	−0.005
−2	+0.002	+0.001	0	−0.001	−0.002	−0.003	−0.004	−0.005	−0.006
−3	+0.001	0	−0.001	−0.002	−0.003	−0.004	−0.005	−0.006	−0.007
−4	0	−0.001	−0.002	−0.003	−0.004	−0.005	−0.006	−0.007	−0.008

REAR AXLE - 226RBA (Continued)

PINION DEPTH MEASUREMENT

Measurements are taken with pinion bearing cups and pinion bearings installed in the housing. Take measurements with Pinion Gauge Set and Dial Indicator (Fig. 9).

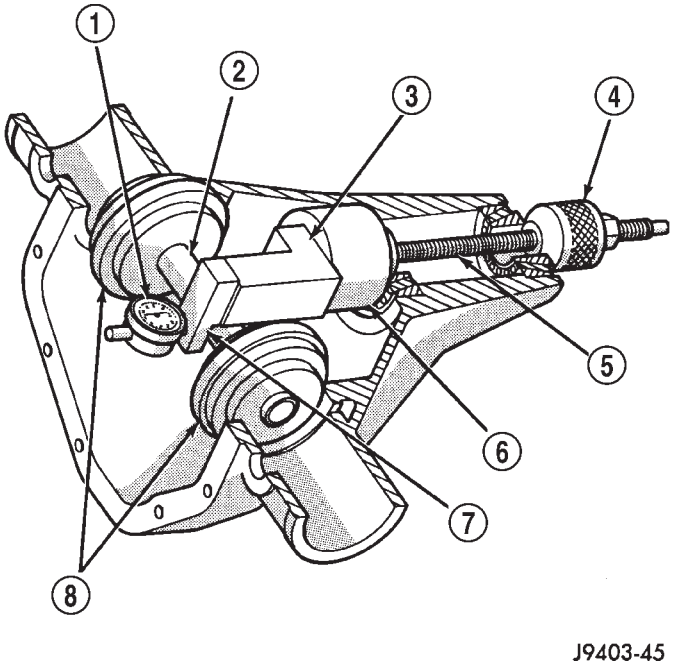

Fig. 9 Pinion Gear Depth Gauge Tools

1 - DIAL INDICATOR - C-3339
2 - ARBOR - D-115-3
3 - PINION HEIGHT BLOCK - 6739
4 - CONE - 6740
5 - SCREW - 6741
6 - PINION BLOCK - 8144
7 - SCOOTER BLOCK - D-115-2
8 - ARBOR DISC - 6927-A

(1) Assemble Pinion Height Block 6739, Pinion Block 8144 and rear pinion bearing onto Screw 6741 (Fig. 9).

(2) Insert assembled height gauge components, rear bearing and screw into the housing through pinion bearing cups (Fig. 10).

(3) Install front pinion bearing and Cone-nut 6740 hand tight (Fig. 9).

(4) Place Arbor Disc 6927A on Arbor D-115-3 in position in the housing side bearing cradles (Fig. 11). Install differential bearing caps on arbor discs and tighten cap bolts to 85 N·m (63 ft. lbs.).

NOTE: Arbor Discs 6927A has different step diameters to fit other axles. Choose proper step for axle being serviced.

(5) Assemble Dial Indicator C-3339 into Scooter Block D-115-2 and secure set screw.

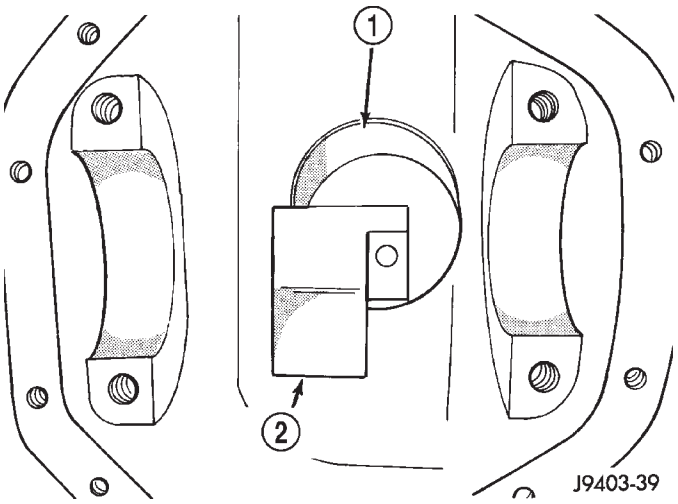

Fig. 10 Pinion Height Block

1 - PINION BLOCK - 8144
2 - PINION HEIGHT BLOCK - 6739

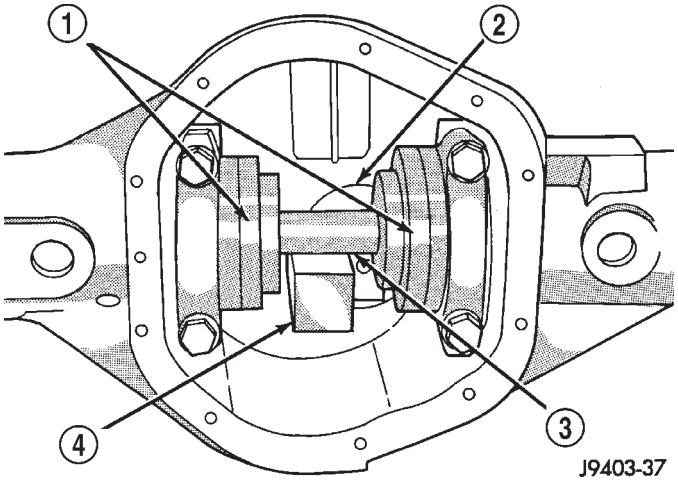

Fig. 11 Gauge Tools In Housing

1 - ARBOR DISC - 6927-A
2 - PINION BLOCK - 8144
3 - ARBOR - D-115-3
4 - PINION HEIGHT BLOCK - 6739

(6) Place Scooter Block/Dial Indicator in position in axle housing so dial probe and scooter block are flush against the rearward surface of the pinion height block (Fig. 9). Hold scooter block in place and zero the dial indicator face to the pointer. Tighten dial indicator face lock screw.

(7) With scooter block still in position against the pinion height block, slowly slide the dial indicator probe over the edge of the pinion height block.

(8) Slide the dial indicator probe across the gap between the pinion height block and the arbor bar with the scooter block against the pinion height block (Fig. 12). When the dial probe contacts the arbor bar,

REAR AXLE - 226RBA (Continued)

the dial pointer will turn clockwise. Bring dial pointer back to zero against the arbor bar, do not turn dial face. Continue moving the dial probe to the crest of the arbor bar and record the highest reading. If the dial indicator can not achieve the zero reading, the rear bearing cup or the pinion depth gauge set is not installed correctly.

(9) Select a shim/oil baffle equal to the dial indicator reading plus the pinion depth variance number etched in the face of the pinion (Fig. 7). For example, if the depth variance is –2, add +0.002 in. to the dial indicator reading.

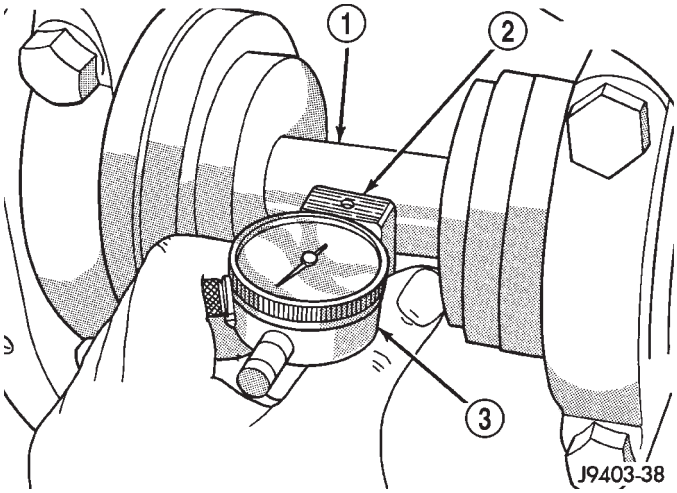

Fig. 12 Pinion Gear Depth Measurement

1 - ARBOR - D-115-3
2 - SCOOTER BLOCK - D-115-2
3 - DIAL INDICATOR - C-3339

DIFFERENTIAL BEARING PRELOAD & GEAR BACKLASH

Differential side bearing preload and gear backlash is achieved by selective shims positioned behind the differential side bearing cones. The proper shim thickness can be determined using slip-fit Dummy Bearings 6929-A in place of the differential side bearings and a Dial Indicator C-3339. Before proceeding with the differential bearing preload and gear backlash measurements, measure the pinion gear depth and prepare the pinion for installation. Establishing proper pinion gear depth is essential to establishing gear backlash and tooth contact patterns. After the overall shim thickness to take up differential side play is measured, the pinion is installed, and the gear backlash shim thickness is measured. The overall shim thickness is the total of the dial indicator reading and the preload specification added together. The gear backlash measurement determines the thickness of the shim used on the ring gear side of the differential case. Subtract the gear backlash shim thickness from the total overall shim thickness and select that amount for the pinion gear side of the differential (Fig. 13). Differential shim measurements are performed with the spreader W-129-B removed.

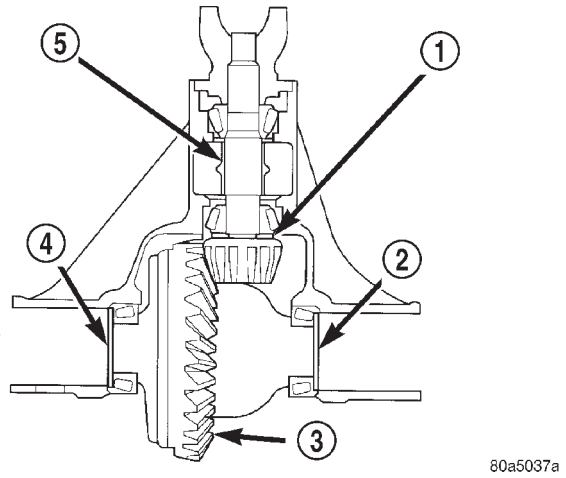

Fig. 13 Adjustment Shim Locations

1 - PINION GEAR DEPTH SHIM/OIL BAFFLE
2 - DIFFERENTIAL BEARING SHIM
3 - RING GEAR
4 - DIFFERENTIAL BEARING SHIM
5 - COLLAPSIBLE SPACER

SHIM SELECTION

NOTE: It is difficult to salvage the differential side bearings during the removal procedure. Install replacement bearings if necessary.

(1) Remove differential side bearings from differential case.

(2) Install ring gear on differential case and tighten bolts to specification.

(3) Install Dummy Bearings 6929-A on differential case.

(4) Install differential case in the housing.

(5) Record the thickness of Dummy Shims 8107, then insert the shims between the dummy bearings and the differential housing (Fig. 14).

(6) Install the bearing caps in the correct positions and snug the bolts (Fig. 15).

(7) Using a dead-blow type hammer, seat the differential dummy bearings to each side of the housing (Fig. 16) and (Fig. 17).

(8) Thread Pilot Stud C-3288-B into rear cover bolt hole below ring gear (Fig. 18).

(9) Attach the Dial Indicator C-3339 to pilot stud and position the indicator plunger on the flat surface between the ring gear bolts (Fig. 18).

(10) Push and hold differential case to pinion gear side of the housing and zero dial indicator (Fig. 19).

REAR AXLE - 226RBA (Continued)

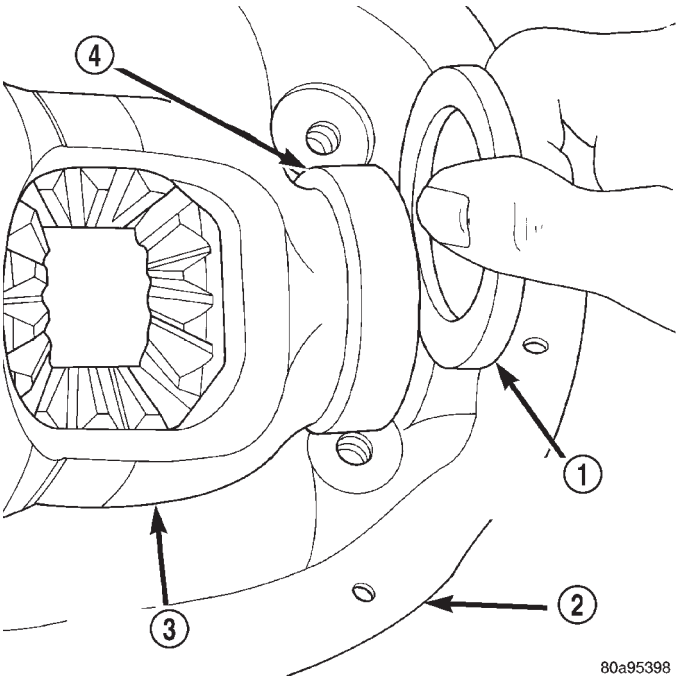

Fig. 14 Dummy Shim Point

1 - DUMMY SHIM - 8107
2 - HOUSING
3 - DIFFERENTIAL CASE
4 - DUMMY BEARINGS - 6929-A

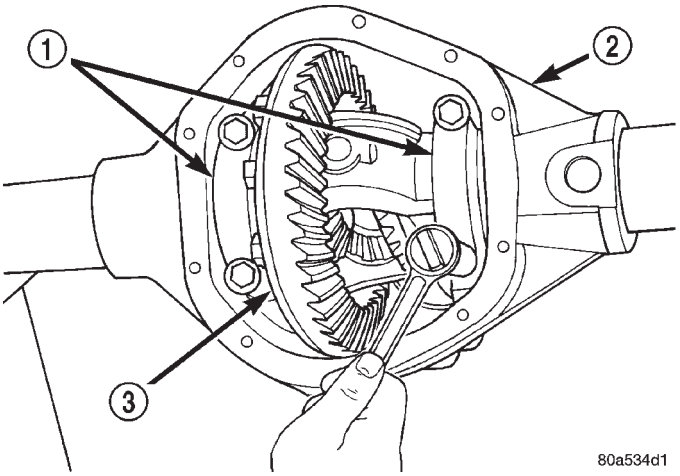

Fig. 15 Tighten Bearing Cap Bolts

1 - BEARING CAP
2 - HOUSING
3 - DIFFERENTIAL CASE

(11) Push and hold differential case to ring gear side of the housing and record dial indicator reading (Fig. 20).

(12) Add 0.0254 mm (0.001 in.) to the zero end play total. This new total represents the thickness of shims to compress, or preload the new bearings when the differential is installed.

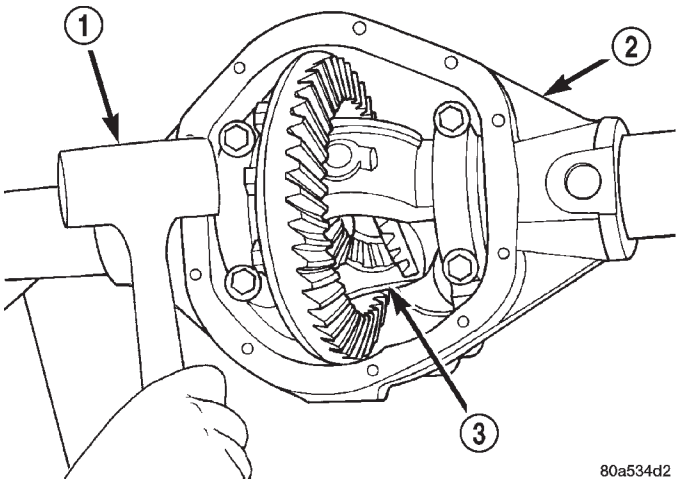

Fig. 16 Seat Dummy Bearing

1 - HAMMER
2 - HOUSING
3 - DIFFERENTIAL CASE

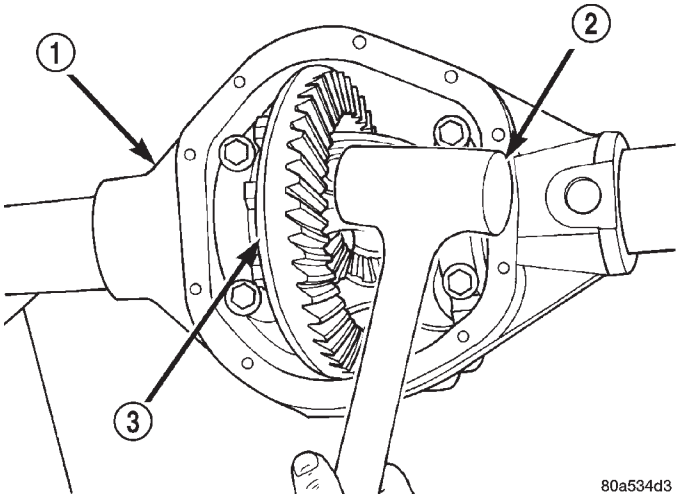

Fig. 17 Seat Dummy Bearing

1 - HOUSING
2 - HAMMER
3 - DIFFERENTIAL CASE

(13) Rotate dial indicator out of the way on the pilot stud.

(14) Remove differential case and dummy bearings from the housing.

(15) Install the pinion gear in the housing. Install the pinion yoke and establish the correct pinion rotating torque.

(16) Install differential case and Dummy Bearings 6929-A in the housing.

(17) Install a single dummy shim in the ring gear side. Install bearing caps and tighten bolts snug.

(18) Seat ring gear side dummy bearing (Fig. 17).

(19) Position the dial indicator plunger on a flat surface between the ring gear bolt heads. (Fig. 18).

REAR AXLE - 226RBA (Continued)

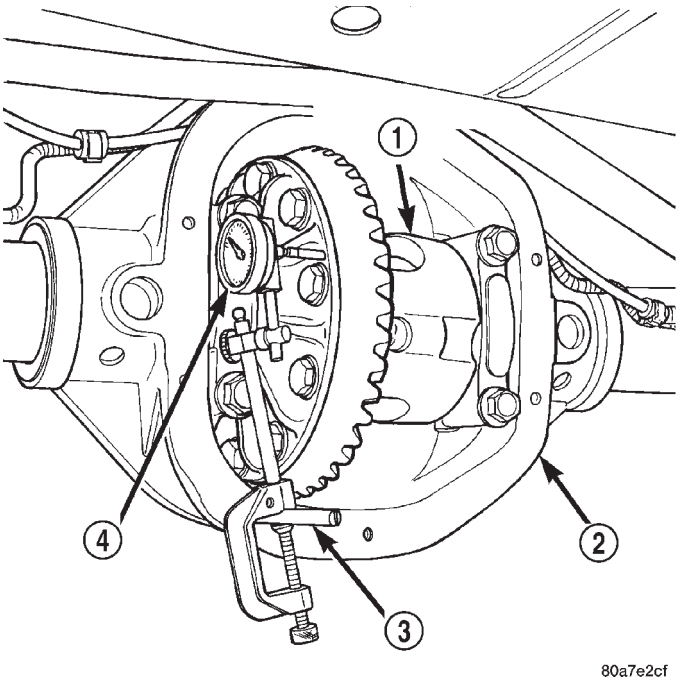

Fig. 18 Differential Side play Measurement

1 - DIFFERENTIAL CASE
2 - HOUSING
3 - PILOT STUD- C-3288-B
4 - DIAL INDICATOR- C-3339

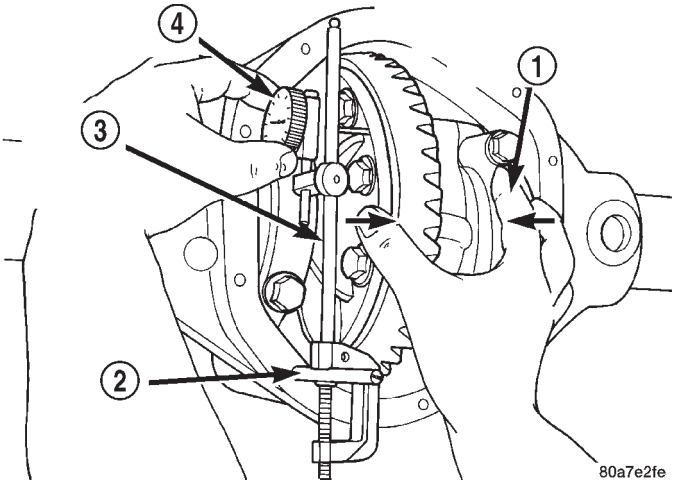

Fig. 19 Differential Case Pinion Gear Side

1 - FORCE DIFFERENTIAL CASE TO PINION GEAR SIDE
2 - PILOT STUD - C-3288-B
3 - DIAL INDICATOR - C-3339
4 - ZERO DIAL INDICATOR FACE

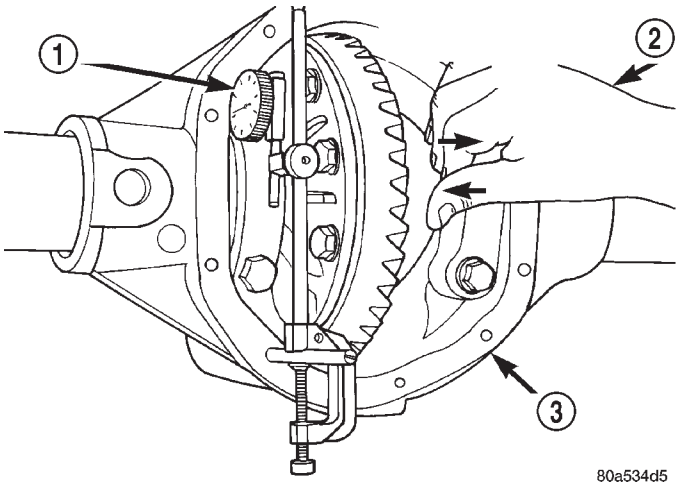

Fig. 20 Differential Case Ring Gear Side

1 - READ DIAL INDICATOR
2 - FORCE DIFFERENTIAL CASE TO RING GEAR SIDE
3 - HOUSING

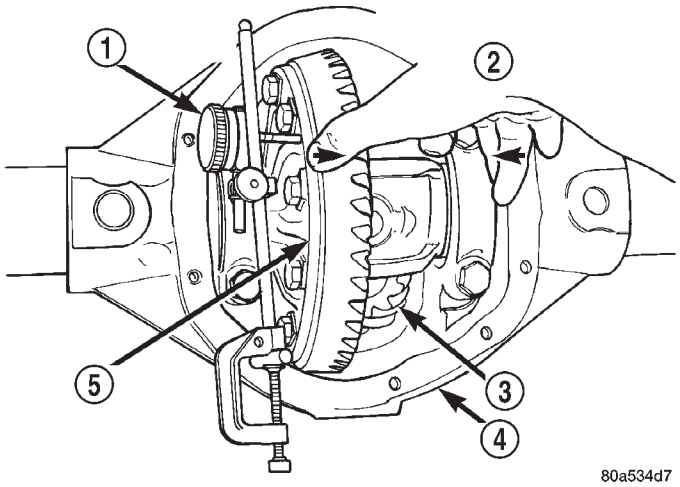

Fig. 21 Zero Dial Indicator

1 - ZERO DIAL INDICATOR FACE
2 - FORCE DIFFERENTIAL CASE TO PINION GEAR SIDE
3 - PINION GEAR
4 - HOUSING
5 - DIFFERENTIAL CASE

(20) Push and hold differential case toward pinion gear and zero dial indicator (Fig. 21).

(21) Push and hold differential case to ring gear side of the housing and record dial indicator reading (Fig. 22). Add Dummy Shim thickness to this reading. This will be the total shim thickness to achieve zero backlash.

(22) Subtract 0.152 mm (0.006 in.) from the dial indicator reading to compensate for backlash between ring and pinion gears. This total is the thickness shim required to achieve proper backlash.

(23) Subtract the backlash shim thickness from the total preload shim thickness. The remainder is the shim thickness required on the pinion side of the housing.

(24) Rotate dial indicator out of the way on pilot stud.

REAR AXLE - 226RBA (Continued)

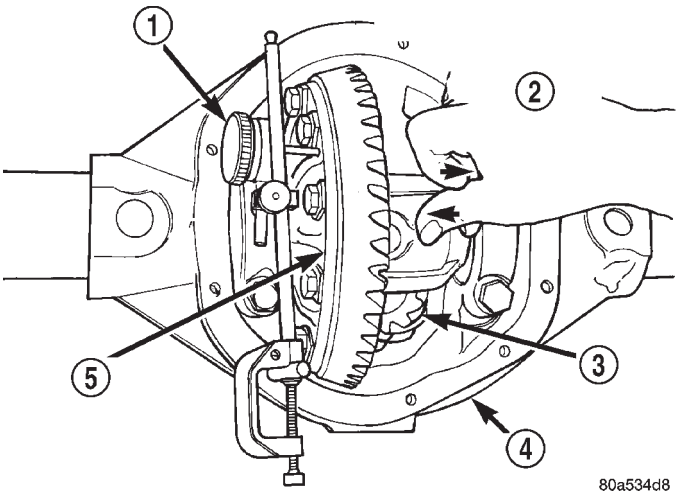

Fig. 22 Differential Case Ring Gear Side

1 - READ DIAL INDICATOR
2 - FORCE DIFFERENTIAL CASE TO RING GEAR SIDE
3 - PINION GEAR
4 - HOUSING
5 - DIFFERENTIAL CASE

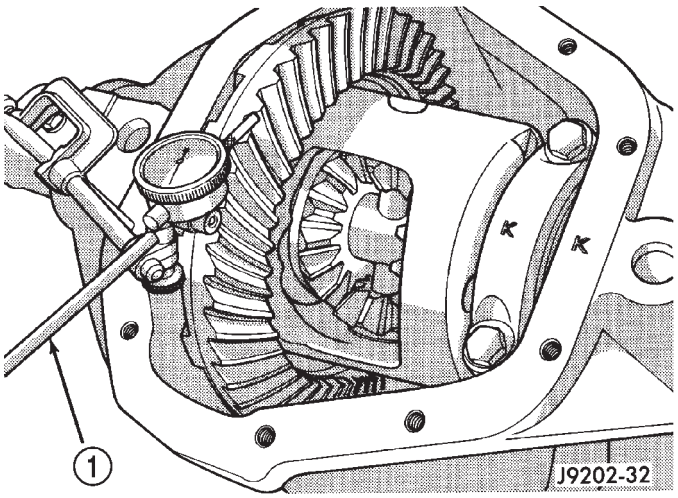

Fig. 23 Ring Gear Backlash Measurement

1 - DIAL INDICATOR

(25) Remove differential case and dummy bearings from the housing.

(26) Install side bearings and cups on differential case.

(27) Install spreader W-129-B, utilizing some items from Adapter Set 6987, on the housing and spread axle opening enough to receive differential case.

(28) Place the bearing preload shims in the housing against the axle tubes.

(29) Install differential case into the housing.

(30) Remove spreader from housing.

(31) Rotate the differential case several times to seat the side bearings.

(32) Position the indicator plunger against a ring gear tooth (Fig. 23).

(33) Push and hold ring gear upward while not allowing the pinion gear to rotate.

(34) Zero dial indicator face to pointer.

(35) Push and hold ring gear downward while not allowing the pinion gear to rotate. Dial indicator reading should be between 0.076 mm (0.003 in.) and 0.15 mm (0.006 in.). If backlash is not within specifications transfer the necessary amount of shim thickness from one side of the housing to the other (Fig. 24).

(36) Verify differential case and ring gear runout by measuring ring to pinion gear backlash at eight locations around the ring gear. Readings should not vary more than 0.05 mm (0.002 in.). If readings vary more than specified, the ring gear or the differential case is defective.

After the proper backlash is achieved, perform Gear Contact Pattern procedure.

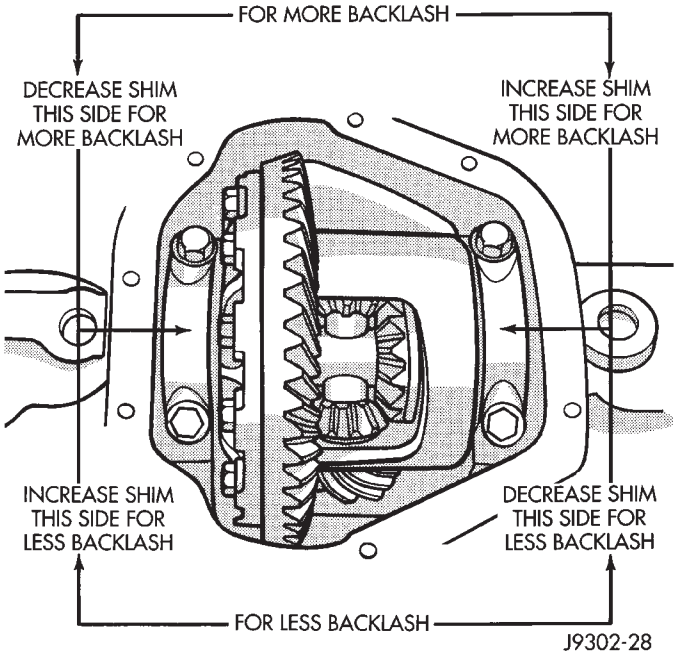

Fig. 24 Backlash Shim

GEAR CONTACT PATTERN

The ring gear and pinion teeth contact patterns will show if the pinion depth is correct in the axle housing. It will also show if the ring gear backlash has been adjusted correctly. The backlash can be adjusted within specifications to achieve desired tooth contact patterns.

(1) Apply a thin coat of hydrated ferric oxide or equivalent to the drive and coast side of the ring gear teeth.

(2) Wrap, twist and hold a shop towel around the pinion yoke to increase the turning resistance of the

REAR AXLE - 226RBA (Continued)

pinion. This will provide a more distinct contact pattern.

(3) With a boxed end wrench on a ring gear bolt, rotate the differential case one complete revolution in both directions while a load is being applied from shop towel.

The areas on the ring gear teeth with the greatest degree of contact against the pinion teeth will squeegee the compound to the areas with the least amount of contact. Note and compare patterns on the ring gear teeth to Gear Tooth Contact Patterns chart (Fig. 25) and adjust pinion depth and gear backlash as necessary.

DIFFERENTIAL BEARING PRELOAD CHECK

The final check on the differential assembly before installing the axles is torque to rotate pinion and differential combined. This will verify the correct differential bearing preload.

Torque to rotate the differential and pinion should be the torque to rotate the pinion plus 0.79-1.24 N·m (7-11 in. lbs.).

REAR AXLE - 226RBA (Continued)

DRIVE SIDE OF RING GEAR TEETH	COAST SIDE OF RING GEAR TEETH	
HEEL 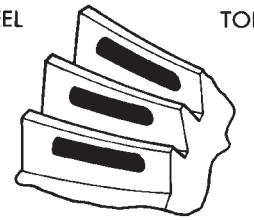 TOE	TOE 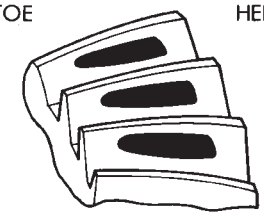 HEEL	DESIRABLE CONTACT PATTERN. PATTERN SHOULD BE CENTERED ON THE DRIVE SIDE OF TOOTH. PATTERN SHOULD BE CENTERED ON THE COAST SIDE OF TOOTH, BUT MAY BE SLIGHTLY TOWARD THE TOE. THERE SHOULD ALWAYS BE SOME CLEARANCE BETWEEN CONTACT PATTERN AND TOP OF THE TOOTH.
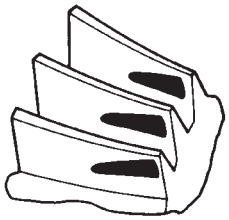	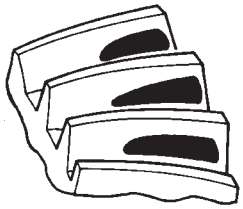	RING GEAR BACKLASH CORRECT. **THINNER** PINION GEAR DEPTH SHIM REQUIRED.
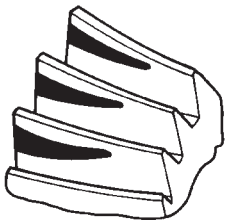	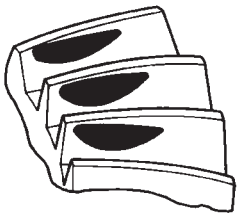	RING GEAR BACKLASH CORRECT. **THICKER** PINION GEAR DEPTH SHIM REQUIRED.
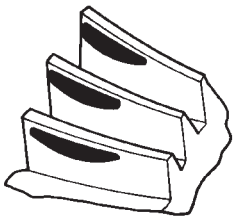	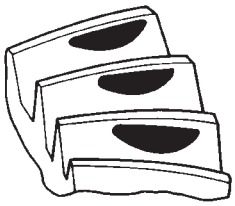	PINION GEAR DEPTH SHIM CORRECT. **DECREASE** RING GEAR BACKLASH.
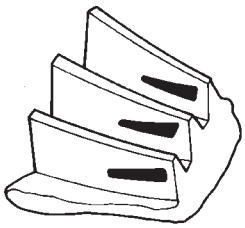	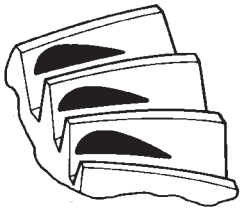	PINION GEAR DEPTH SHIM CORRECT. **INCREASE** RING GEAR BACKLASH.

J9003-24

Fig. 25 Gear Contact Patterns

SPECIFICATIONS

REAR AXLE - 226RBA

AXLE SPECIFICATIONS

DESCRIPTION	SPECIFICATION
Axle Ratio	3.55, 3.73
Differential Bearing Preload	0.025 mm (0.001 in.)
Differential Side Gear Clearance	0.0-0.15 mm (0.0-0.006 in.)
Ring Gear Diameter	226 mm (8.9 in.)
Ring Gear Backlash	0.076.-0.15 mm (0.003-0.006 in.)
Pinion Gear Std. Depth	109.52 mm (4.31 in.)
Pinion Bearing Preload - Original Bearings	1-2 N·m (10-20 in. lbs.)
Pinion Bearing Preload - New Bearings	2.8-4 N·m (25-35 in. lbs.)

TORQUE SPECIFICATIONS

DESCRIPTION	N·m	Ft. Lbs.	In. Lbs.
Differential Cover Bolts	41	30	—
Bearing Cap Bolts	85	63	—
Ring Gear Bolts	136	100	—
Pinion Nut	298-380	220-280	—
Pinion Mate Shaft Screw	17.6	13	—
Axle Bearing Retainer Plate Nuts	61	45	—

SPECIAL TOOLS

AXLE

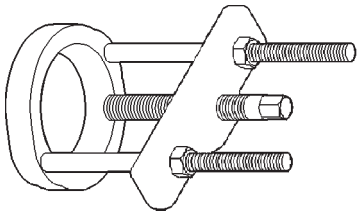

Puller Set C-293-PA

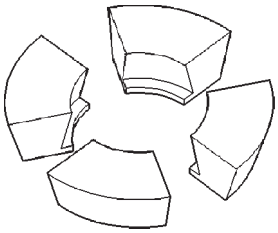

Adapter 8353

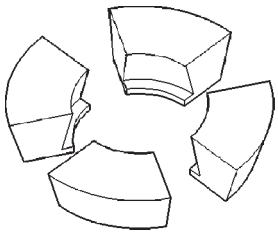

Adapter 8353

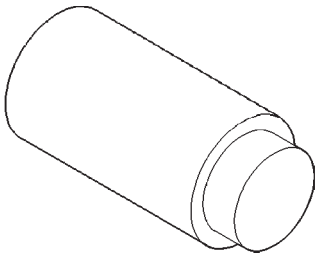

Adapter Plug C-293-3

SPECIAL TOOLS (Continued)

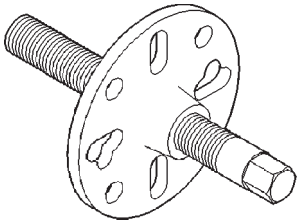

Remover C-452

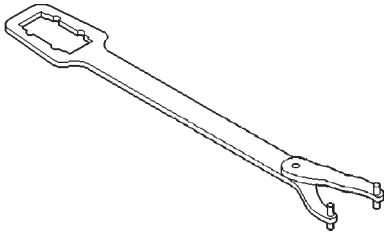

Wrench Flange C-3281

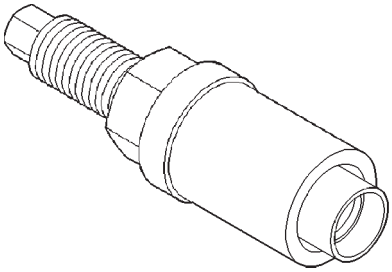

Installer C-3718

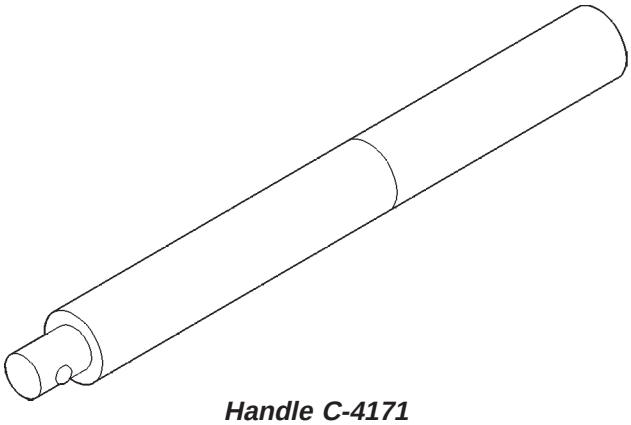

Handle C-4171

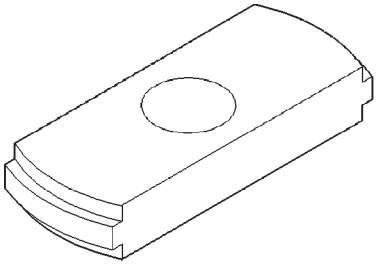

Remover C-4307

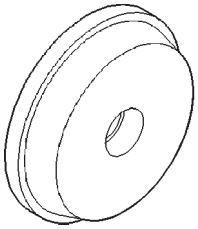

Installer C-4308

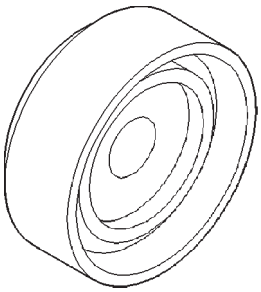

Installer C-4340

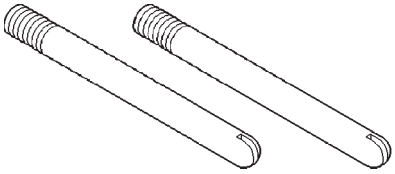

Pilot Studs C-3288-B

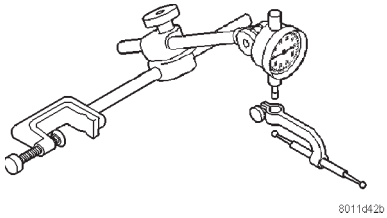

Dial Indicator C-3339

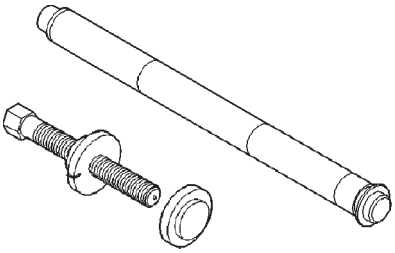

Trac-lok Tool C-4487

SPECIAL TOOLS (Continued)

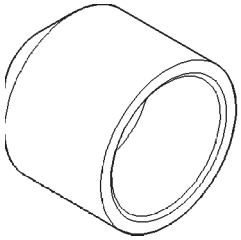

Installer C-3972-A

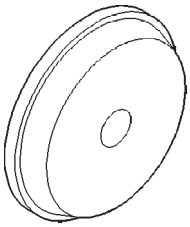

Installer D-129

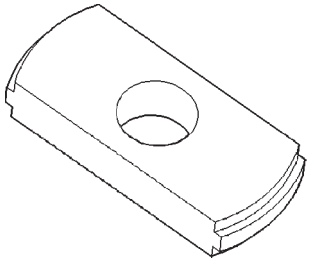

Remover D-103

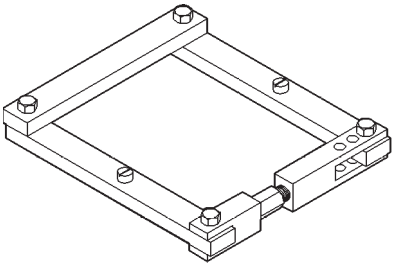

Spreader

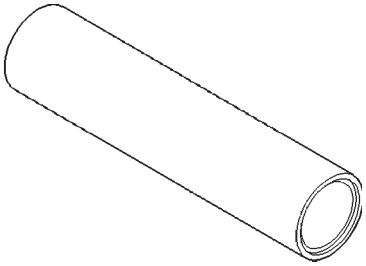

Installer 6448

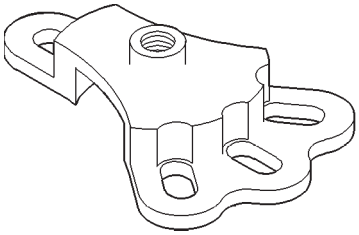

Adapter 6790

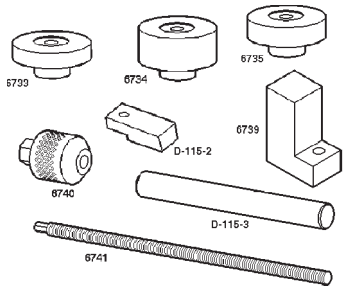

Pinion Depth Set 6955

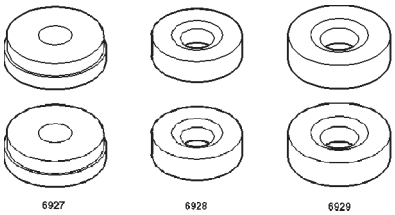

Bearing Dummy Set 6956

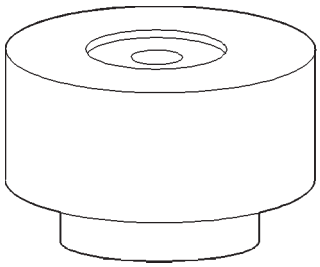

Gauge Block 8144

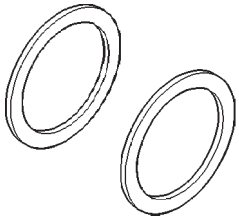

Shims Dummy 8107

SPECIAL TOOLS (Continued)

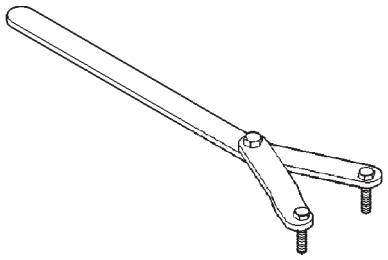

Wrench Spanner 6958

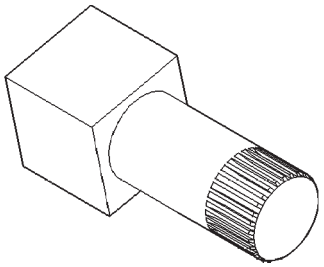

Fixture Holding 6963-A

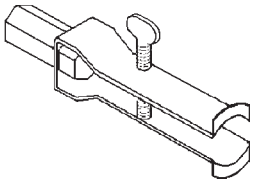

Remover 7794-A

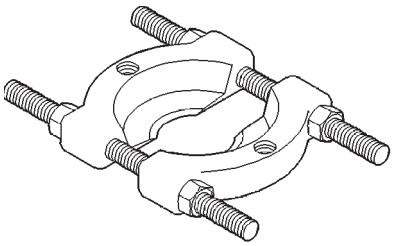

Splitter Bearing 1130

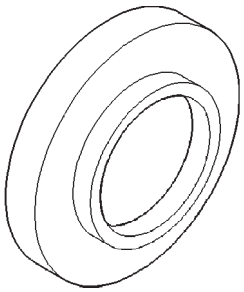

Installer Gear/Bearing 7913-A

AXLE SHAFTS

REMOVAL

(1) Place transmission in neutral.
(2) Raise and support vehicle.
(3) Remove wheel and tire assembly.
(4) Remove brake caliper (Refer to 5 - BRAKES/HYDRAULIC/MECHANICAL/DISC BRAKE CALIPERS - REMOVAL) and rotor. (Refer to 5 - BRAKES/HYDRAULIC/MECHANICAL/ROTORS - REMOVAL)
(5) Remove nuts holding axle retainer plate to axle tube from the rear of the axle flange.
(6) Pull axle shaft from the axle with Slide Hammer 7420 and Adapter 6790. Mount the adapter to the axle with lug nuts.

NOTE: It is normal that the axle bearing race is loose in the axle tube.

INSTALLATION

(1) Insall axle into the axle tube with the flat area of the retainer plate upward.
(2) Insert retaining plate studs into the brake backing plate and axle tube flange.
(3) Install retainer nuts and tighten nuts to 61 N·m (45 ft. lbs.).
(4) Install the brake caliper (Refer to 5 - BRAKES/HYDRAULIC/MECHANICAL/DISC BRAKE CALIPERS - INSTALLATION) and rotor. (Refer to 5 - BRAKES/HYDRAULIC/MECHANICAL/ROTORS - INSTALLATION)
(5) Install wheel and tire.
(6) Check and fill the differential with gear lubricant.
(7) Lower vehicle.

AXLE BEARINGS/SEALS

REMOVAL

(1) Remove axle shaft from vehicle.

NOTE: It is normal that the axle bearing race is loose in the axle tube.

(2) Drill a shallow hole into soft steel axle bearing retaining ring with a 3/8 in. drill bit (Fig. 26). Use a drill depth stop to avoid marking the axle.
(3) With a cold chisel cut the retaining ring across drilled hole. (Fig. 27)
(4) Slide retaining ring from axle shaft.
(5) Remove axle bearing from the shaft with, a press and Splitter 1130 placed between the seal and bearing (Fig. 28).
(6) Remove seal from axle.
(7) Remove retaining plate from axle shaft.

INSTALLATION

(1) Verify axle shaft retaining plate is flat with a straight edge.

AXLE BEARINGS/SEALS (Continued)

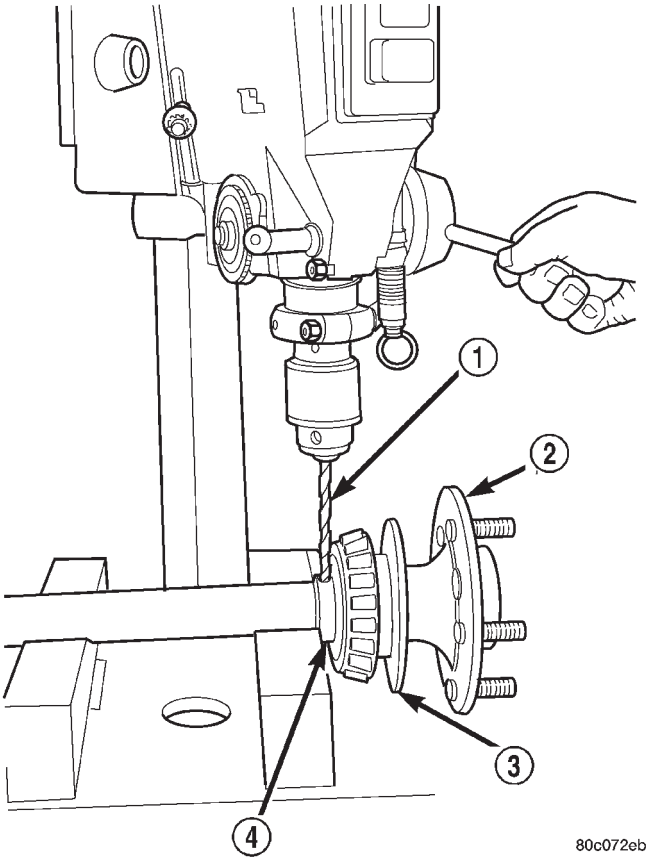

Fig. 26 Drill Retaining Ring

1 - DRILL BIT
2 - AXLE
3 - RETAINING PLATE
4 - RETAINING RING

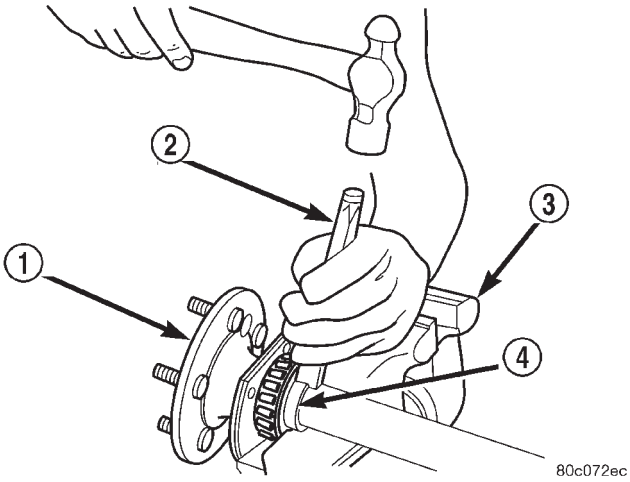

Fig. 27 Retaining Ring

1 - AXLE
2 - COLD CHISEL
3 - VISE
4 - RETAINING RING

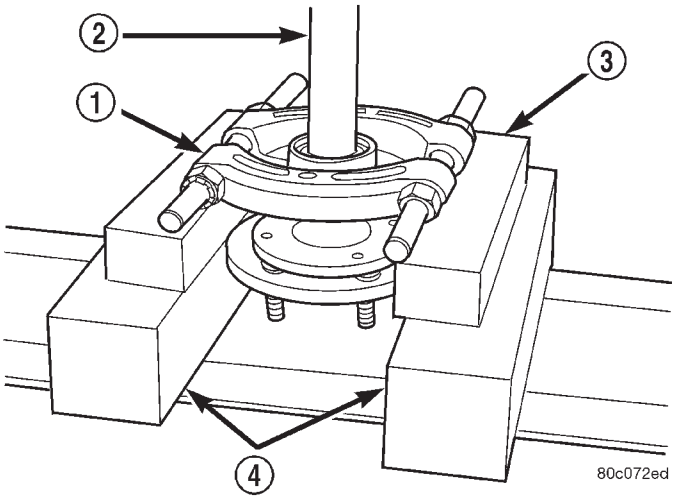

Fig. 28 Axle Bearing And Seal

1 - AXLE
2 - PRESS PLATES
3 - BLOCKS
4 - SPLITTER - 1130

NOTE: If the plate is warped or the studs are loose in the plate replace the retaining plate.

(2) Install retaining plate on the axle shaft (Fig. 29).

(3) Apply a coat of multi-purpose grease on sealing surface of axle seal.

(4) Install seal on the axle shaft with cavity away from retaining plate (Fig. 29).

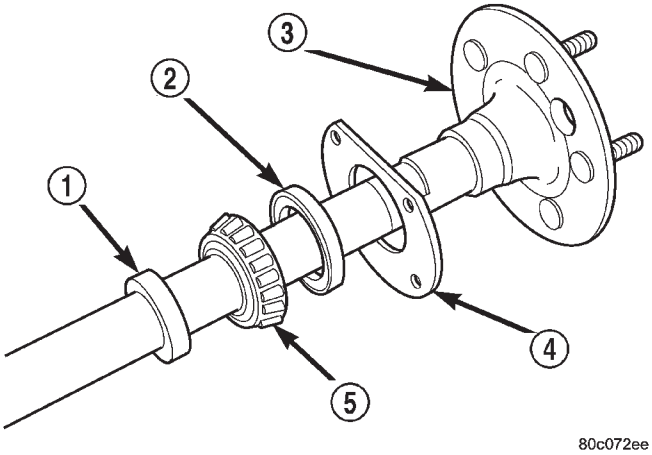

Fig. 29 Axle Bearing And Seal Components

1 - RETAINING RING
2 - SEAL
3 - AXLE
4 - RETAINING PLATE
5 - AXLE BEARING

AXLE BEARINGS/SEALS (Continued)

(5) Lubricate bearing with Mopar® Wheel Bearing Grease or equivalent. Wipe excess grease from the bearing.

(6) Install bearing on the axle shaft with Installer 7913 and a press (Fig. 30).

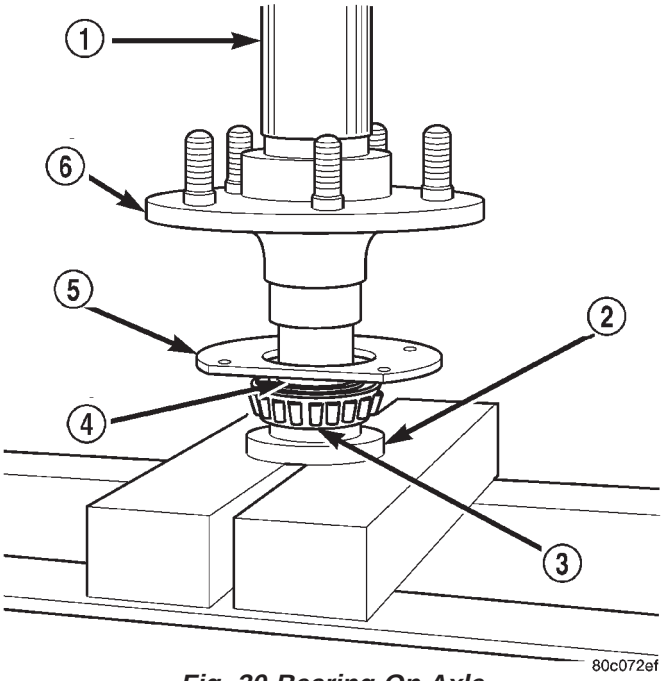

Fig. 30 Bearing On Axle

1 - PRESS RAM
2 - INSTALLER - 7913
3 - AXLE BEARING
4 - SEAL
5 - RETAINING PLATE
6 - AXLE

(7) Press soft metal retaining ring onto axle shaft with Installer 7913 and a press (Fig. 31).

(8) Install axle in vehicle.

PINION SEAL

REMOVAL

(1) Raise and support the vehicle.

(2) Remove wheel and tire assemblies.

(3) Remove rear brake rotors (Refer to 5 - BRAKES/HYDRAULIC/MECHANICAL/ROTORS - REMOVAL) and calipers. (Refer to 5 - BRAKES/HYDRAULIC/MECHANICAL/DISC BRAKE CALIPERS - REMOVAL)

(4) Mark propeller shaft and pinion yoke for installation reference.

(5) Remove the propeller shaft from the yoke.

(6) Rotate pinion gear three or four times and verify that pinion rotates smoothly.

(7) Record torque necessary to rotate the pinion gear with a inch pound dial-type torque wrench.

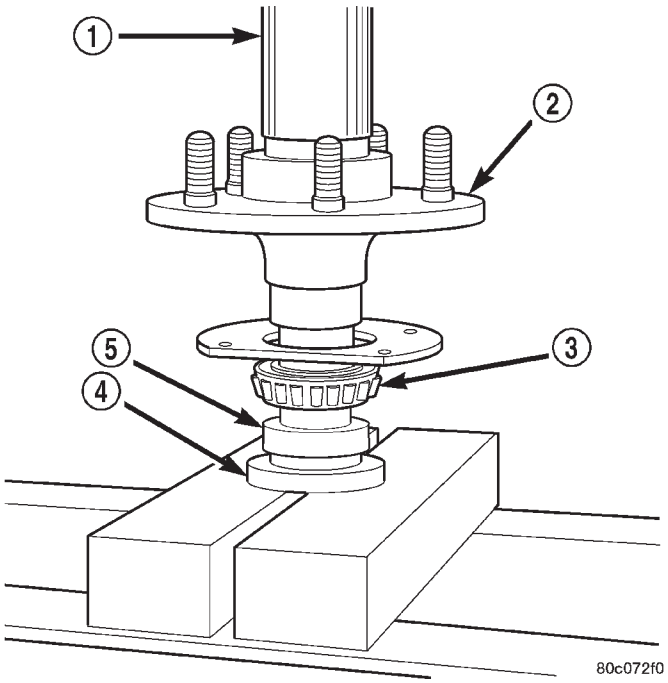

Fig. 31 Bearing Retaining Ring On Axle

1 - PRESS
2 - AXLE
3 - AXLE BEARING
4 - INSTALLER - 7913
5 - RETAINING RING

(8) Using a short piece of pipe and Spanner Wrench 6958 to hold the pinion yoke and remove the pinion nut and washer (Fig. 32).

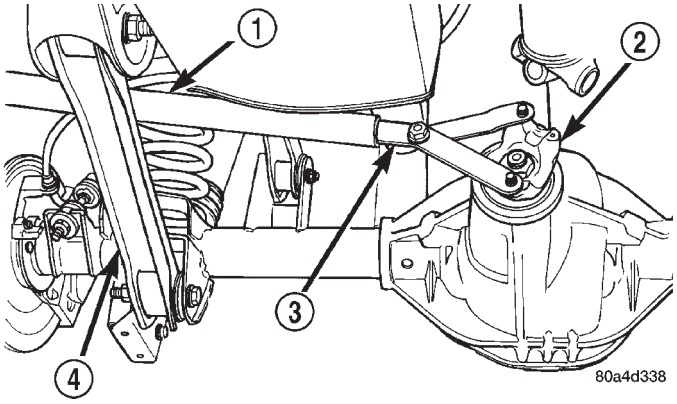

Fig. 32 Pinion Yoke Holder

1 - PIPE
2 - PINION YOKE
3 - WRENCH - 6958
4 - LOWER CONTROL ARM

(9) Remove pinion companion flange with Remover C-452 and Flange Wrench C-3281. (Fig. 33)

(10) Remove pinion seal with Remover 7794-A and a slide hammer (Fig. 34).

PINION SEAL (Continued)

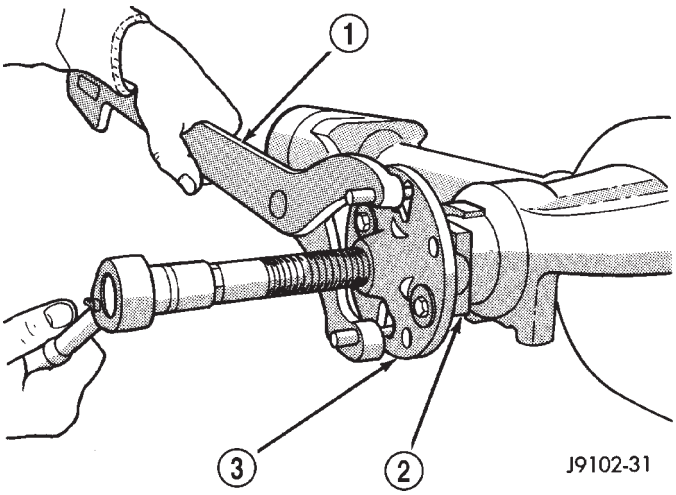

Fig. 33 Pinion Yoke Remover

1 - SPECIAL TOOL C-3281
2 - YOKE
3 - SPECIAL TOOL C-452

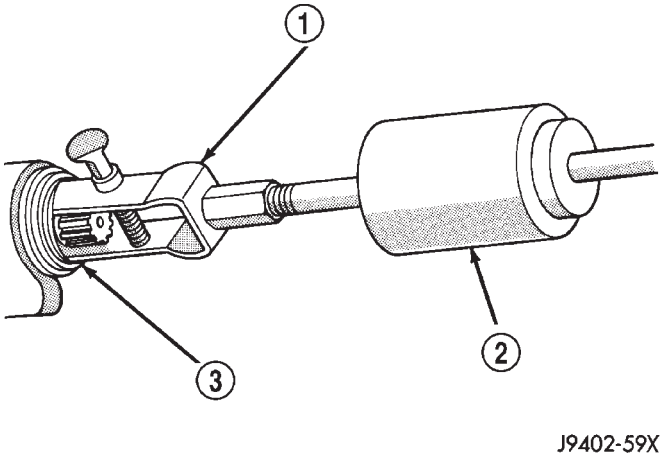

Fig. 34 Pinion Seal Remover

1 - REMOVER - 7794-A
2 - SLIDE HAMMER
3 - PINION SEAL

INSTALLATION

(1) Apply a light coating of gear lubricant on the lip of pinion seal. Install seal with Installer D-163 and Handle C-4171 (Fig. 35).

(2) Install yoke on the pinion gear with Installer C-3718 and Spanner Wrench 6958 (Fig. 36).

(3) Install a new nut on the pinion gear. **Tighten the nut only enough to remove the shaft end play.**

CAUTION: Do not exceed the minimum tightening torque 271 N·m (200 ft. lbs.) when installing the pinion yoke retaining nut at this point. Damage to collapsible spacer or bearings may result.

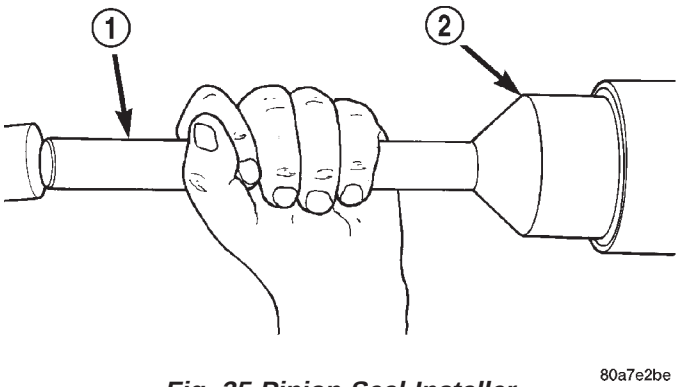

Fig. 35 Pinion Seal Installer

1 - SPECIAL TOOL C-4171
2 - SPECIAL TOOL C-3972–A

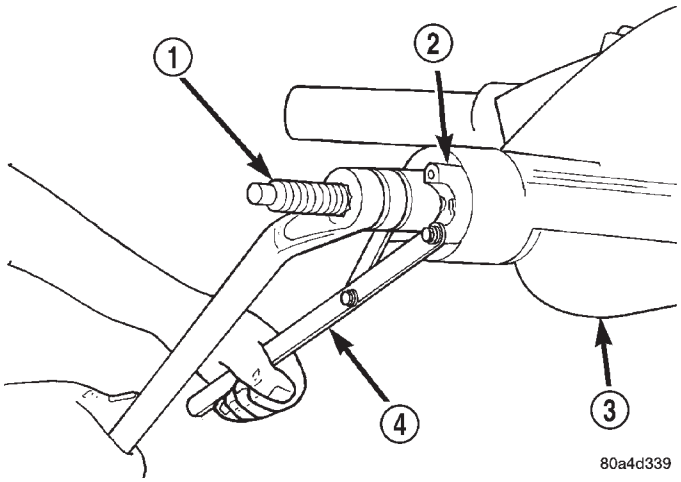

Fig. 36 Pinion Yoke Installer

1 - INSTALLER - C-3718
2 - PINION YOKE
3 - AXLE HOUSING
4 - SPANNER WRENCH - 6958

(4) Rotate the pinion a minimum of ten times. Verify that the pinion rotates smoothly. Rotate the pinion shaft using an inch pound torque wrench. Rotating torque should be equal to the reading recorded during removal, plus 0.56 N·m (5 in. lbs.) (Fig. 37).

(5) If rotating torque is low, use Wrench 6958 to hold the pinion yoke (Fig. 38) and tighten the pinion shaft nut in 6.8 N·m (5 ft. lbs.) increments until rotating torque is achieved.

CAUTION: If the maximum tightening torque is reached prior to reaching the required rotating torque, the collapsible spacer may have been damaged. Replace the collapsible spacer.

(6) Align the installation reference marks on the propeller shaft and pinion companion flange and install the propeller shaft.

PINION SEAL (Continued)

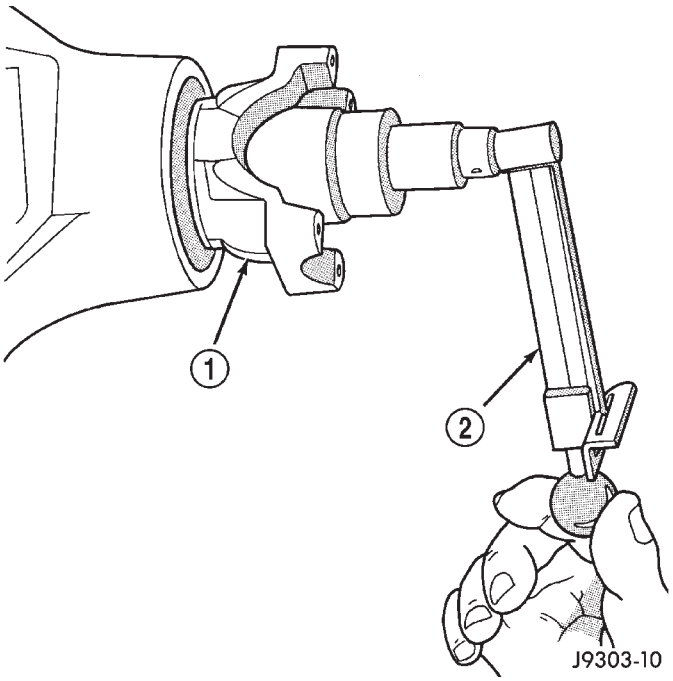

Fig. 37 Pinion Rotating Torque

1 - PINION YOKE
2 -TORQUE WRENCH

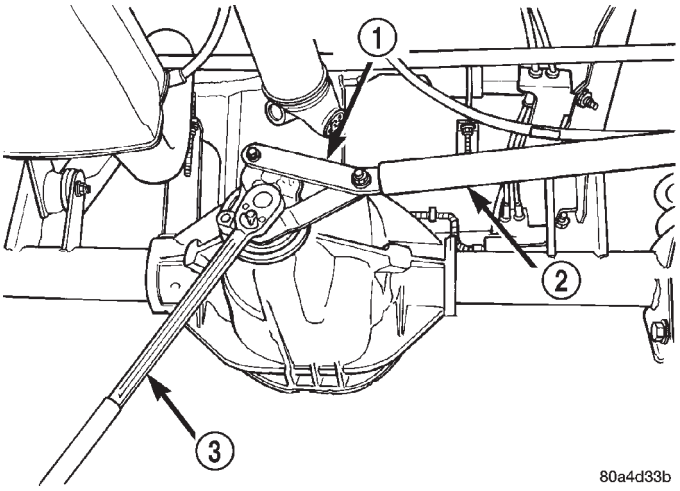

Fig. 38 Pinion Shaft Nut

1 - SPANNER WRENCH - 6958
2 - PIPE
3 - TORQUE WRENCH

(7) Fill differential with gear lubricant.

(8) Install the brake rotors (Refer to 5 - BRAKES/HYDRAULIC/MECHANICAL/ROTORS - INSTALLATION) and calipers. (Refer to 5 - BRAKES/HYDRAULIC/MECHANICAL/DISC BRAKE CALIPERS - INSTALLATION)

(9) Install wheel and tire assemblies.

(10) Lower the vehicle.

COLLAPSIBLE SPACER

REMOVAL

(1) Raise and support the vehicle.

(2) Remove wheel and tire assemblies.

(3) Remove rear brake rotors (Refer to 5 - BRAKES/HYDRAULIC/MECHANICAL/ROTORS - REMOVAL) and calipers. (Refer to 5 - BRAKES/HYDRAULIC/MECHANICAL/DISC BRAKE CALIPERS - REMOVAL)

(4) Mark propeller shaft and pinion yoke for installation reference and remove propeller shaft.

(5) Rotate pinion gear a minimum of ten times and verify pinion rotates smoothly.

(6) Record rotate torque of the pinion gear, with an inch pound torque wrench for installation reference.

(7) Hold pinion yoke with Spanner Wrench 6958 and remove pinion nut and washer (Fig. 39).

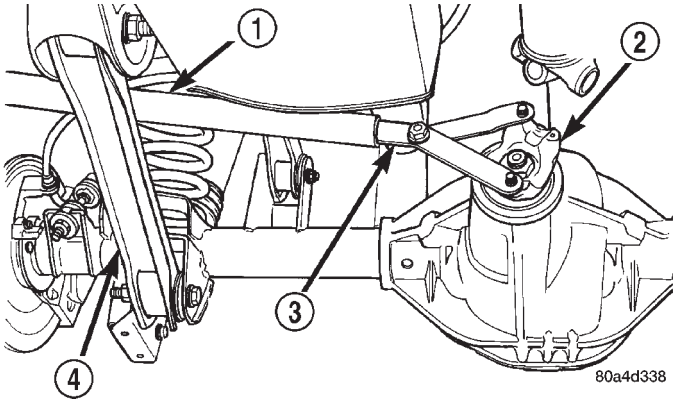

Fig. 39 Pinion Yoke

1 - PIPE
2 - PINION YOKE
3 - SPANNER WRENCH - 6958
4 - LOWER CONTROL ARM

(8) Remove the pinion yoke with Remover C-452 and Wrench C-3281 (Fig. 40).

(9) Remove pinion shaft seal with Remover 7794-A and slide hammer (Fig. 41).

(10) Remove front pinion bearing using a pair of pick tools to pull the bearing off the pinion gear shaft. If the pinion gear becomes bound on the pinion shaft, lightly tap the end of the shaft with a rawhide/rubber mallet.

(11) Remove the collapsible spacer.

INSTALLATION

(1) Install a **new** collapsible spacer on pinion shaft.

(2) Install pinion front bearing on the pinion shaft.

(3) Apply a light coating of gear lubricant on the lip of pinion seal and install seal with Installer D-163 and Handle C-4171 (Fig. 42).

COLLAPSIBLE SPACER (Continued)

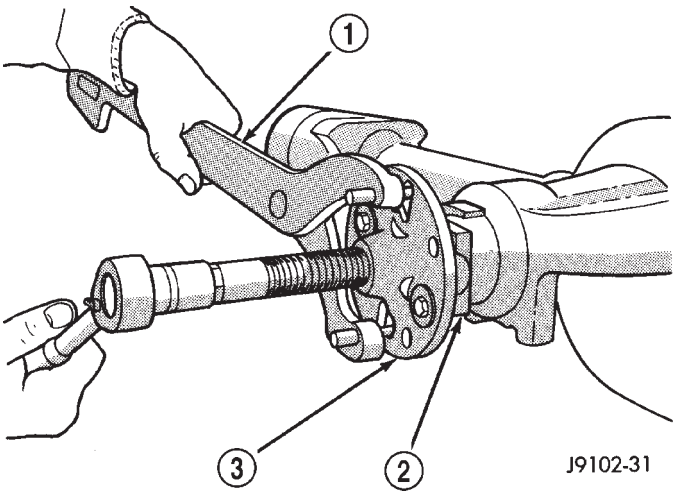

Fig. 40 Pinion Yoke Puller

1 - WRENCH - C-3281
2 - YOKE
3 - PULLER - C-452

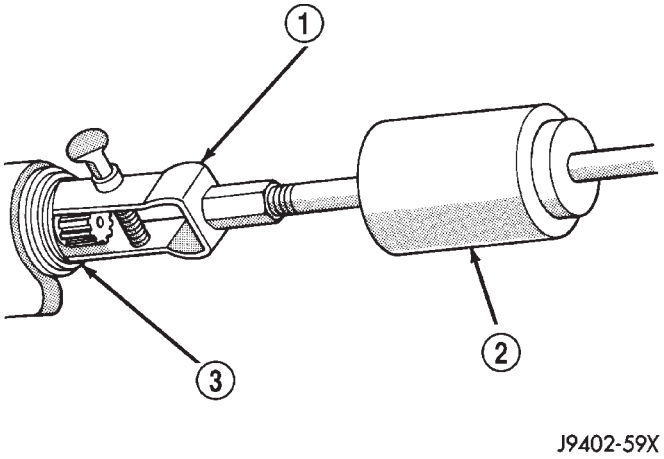

Fig. 41 Pinion Seal Remover

1 - REMOVER - 7794-A
2 - SLIDE HAMMER
3 - PINION SEAL

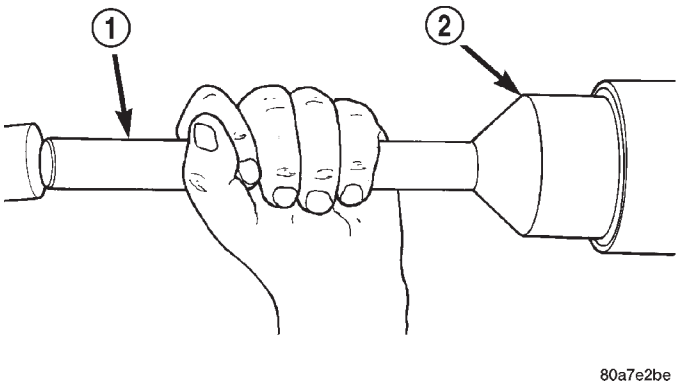

Fig. 42 Pinion Seal Installer

1 - HANDLE - C-4171
2 - INSTALLER - D-163

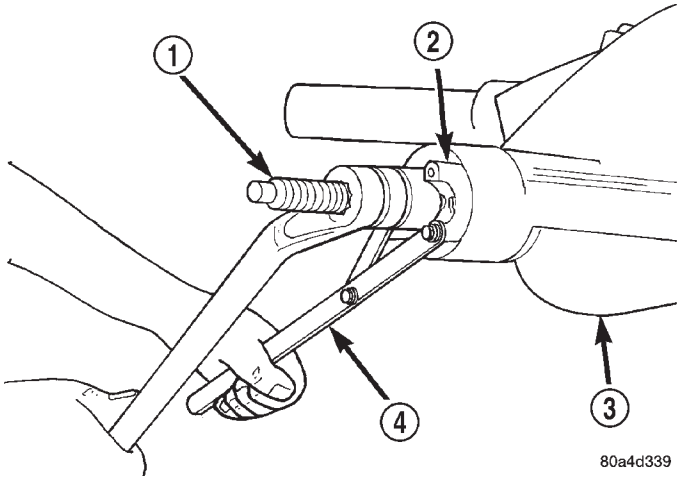

Fig. 43 Pinion Yoke Installer

1 - INSTALLER - C-3718
2 - PINION YOKE
3 - AXLE HOUSING
4 - SPANNER WRENCH - 6958

(4) Install yoke with Installer C-3718 and Spanner Wrench 6958 (Fig. 43).

(5) Install yoke washer and **new** nut on the pinion gear. Tighten the nut to 271 N·m (200 ft. lbs.).

CAUTION: Never loosen pinion gear nut to decrease pinion gear bearing rotating torque and never exceed specified preload torque. If preload torque or rotating torque is exceeded a new collapsible spacer must be installed.

(6) Using yoke with Spanner Wrench 6958 and a torque wrench set at 474 N·m (350 ft. lbs.), (Fig. 44) slowly tighten the nut in 6.8 N·m (5 ft. lbs.) increments until the rotating torque is achieved. Measure the rotating torque frequently to avoid over crushing the collapsible spacer (Fig. 45).

NOTE: If more than 474 N·m (350 ft. lbs.) torque is required to crush the collapsible spacer, the spacer is defective and must be replaced.

(7) Check rotating torque with an inch pound torque wrench (Fig. 45). The rotating torque of the pinion gear should be, the reading recorded during removal plus an additional 0.56 N·m (5 in. lbs.).

(8) Install propeller shaft with reference marks align.

(9) Install rear brake rotors (Refer to 5 - BRAKES/HYDRAULIC/MECHANICAL/ROTORS - INSTALLATION) and calipers. (Refer to 5 - BRAKES/HYDRAULIC/MECHANICAL/DISC BRAKE CALIPERS - INSTALLATION)

COLLAPSIBLE SPACER (Continued)

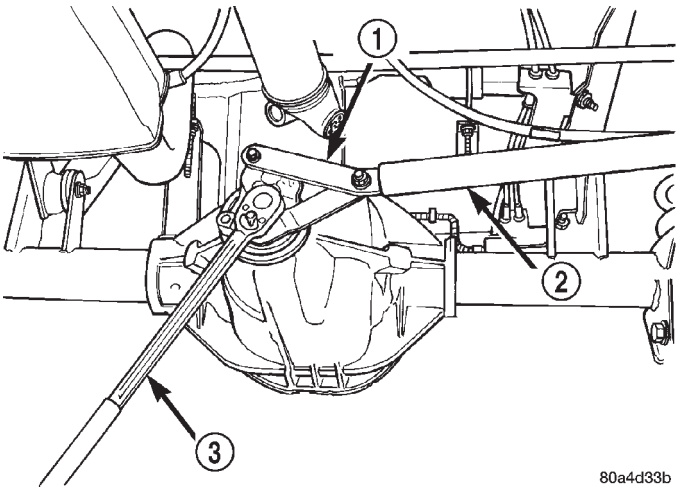

Fig. 44 Pinion Nut

1 - WRENCH - 6958
2 - PIPE
3 - TORQUE WRENCH

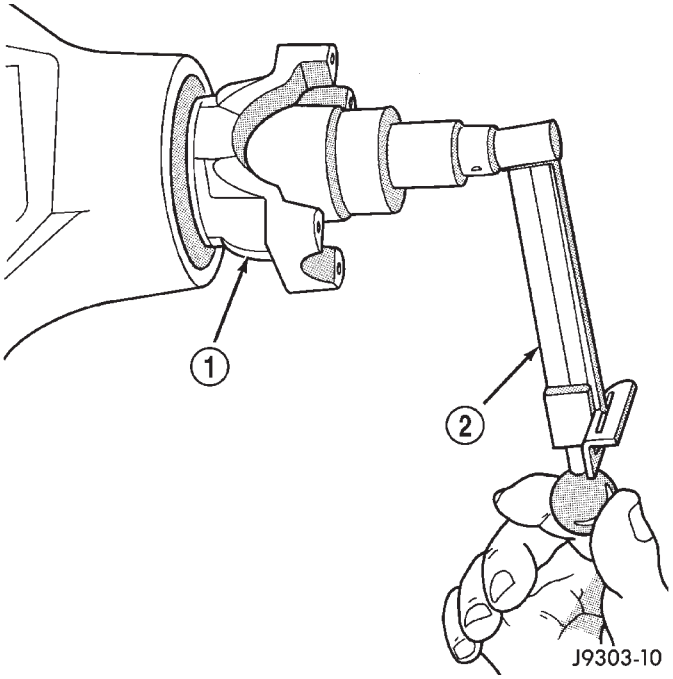

Fig. 45 Pinion Gear Rotating Torque

1 - PINION YOKE
2 - TORQUE WRENCH

(10) Add gear lubricant, if necessary.
(11) Install wheel and tire assemblies.
(12) Remove supports and lower vehicle.

DIFFERENTIAL

REMOVAL

(1) Raise and support vehicle.
(2) Remove the lubricant fill hole plug from the differential housing cover.
(3) Remove the differential housing cover and allow fluid to drain.
(4) Clean the housing cavity with flushing oil, light engine oil or lint free cloth. **Do not use water, steam, kerosene or gasoline for cleaning.**
(5) Remove axle shafts.
(6) Note the reference letters stamped on the bearing caps and housing machined sealing surface (Fig. 46).

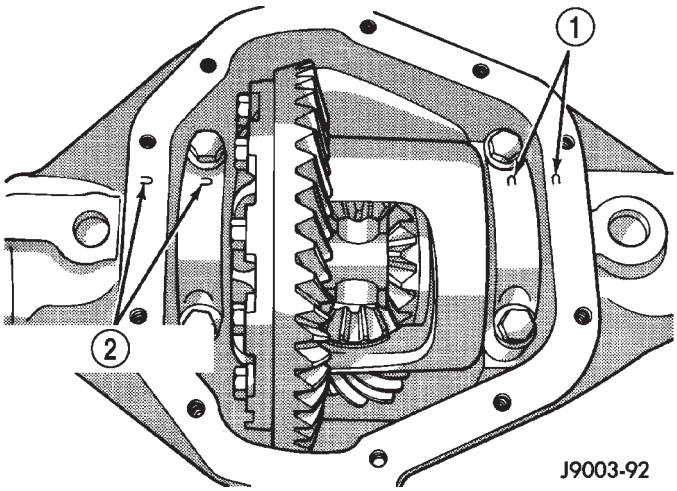

Fig. 46 Bearing Cap Identification

1 - REFERENCE LETTERS
2 - REFERENCE LETTERS

(7) Loosen the differential bearing cap bolts.
(8) Position Spreader W-129-B, utilizing some items from Adapter set 6987, with the tool dowel pins seated in the locating holes (Fig. 47). Install the hold-down clamps and tighten the tool turnbuckle finger-tight.
(9) Install a Pilot Stud C-3288-B at the left side of the differential housing. Attach Dial Indicator C-3339 to pilot stud. Load the indicator plunger against the opposite side of the housing (Fig. 48) and zero the indicator.

CAUTION: Do not spread over 0.38 mm (0.015 in). If the housing is over–spread, it could be distorted or damaged.

DIFFERENTIAL (Continued)

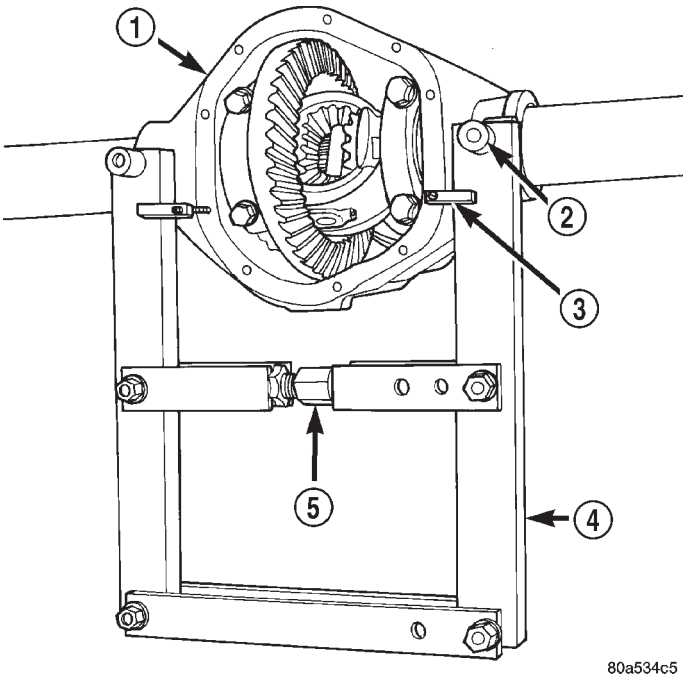

Fig. 47 Spreader Location

1 - DIFFERENTIAL HOUSING
2 - ADAPTER
3 - SAFETY HOLD DOWN
4 - SPREADER
5 - TURNBUCKLE

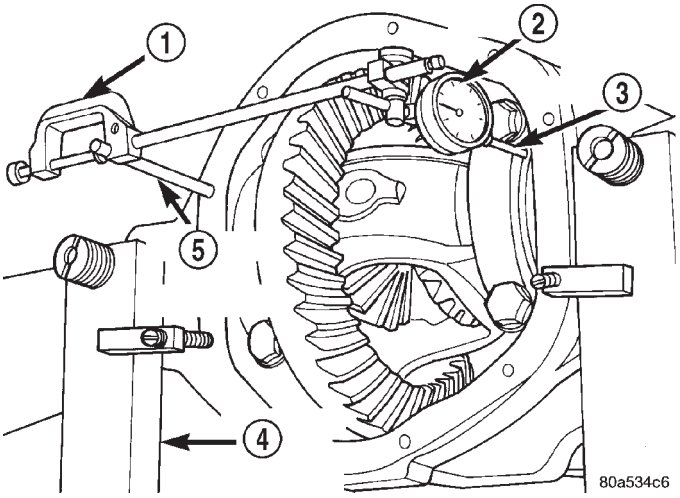

Fig. 48 Dial Indicator Location

1 - CLAMP
2 - DIAL INDICATOR
3 - LEVER ADAPTER
4 - SPREADER
5 - PILOT STUD

(10) Spread the housing enough to remove the differential case from the housing. Measure the distance with the dial indicator (Fig. 49).

(11) Remove the dial indicator.

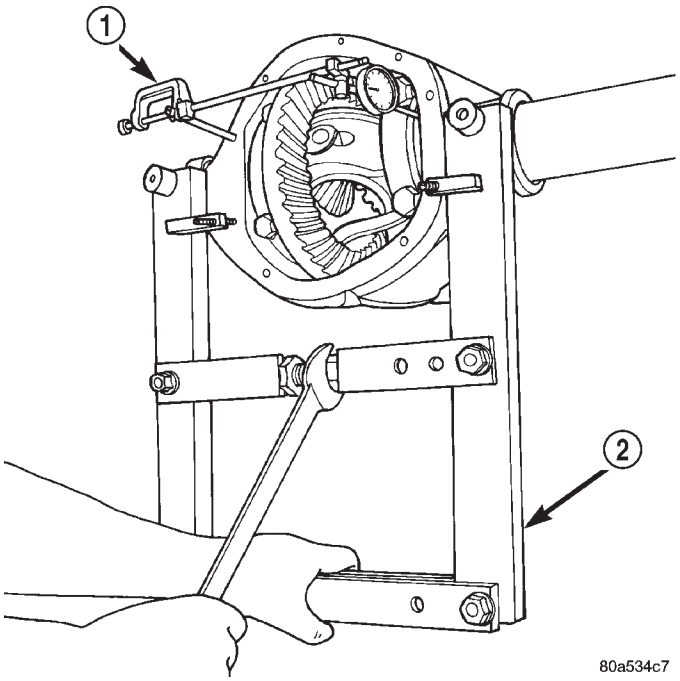

Fig. 49 Spread Differential Housing

1 - DIAL INDICATOR
2 - SPREADER

(12) While holding the differential case in position, remove the differential bearing cap bolts and caps.

(13) Remove the differential from the housing. Ensure that the differential bearing cups remain in position on the differential bearings (Fig. 50).

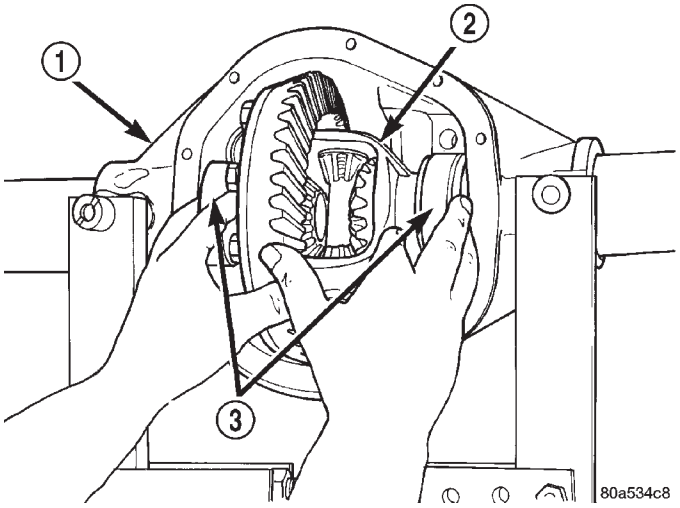

Fig. 50 Differential

1 - DIFFERENTIAL HOUSING
2 - DIFFERENTIAL CASE
3 - BEARING CUPS

(14) Remove bearing cups from the differential and tag them to indicate their location on the differential.

DIFFERENTIAL (Continued)

(15) Remove differential case preload shims from the housing and tag them to indicate their location in the housing.

(16) Remove spreader from housing.

DISASSEMBLY

(1) Remove pinion mate shaft lock screw (Fig. 51).

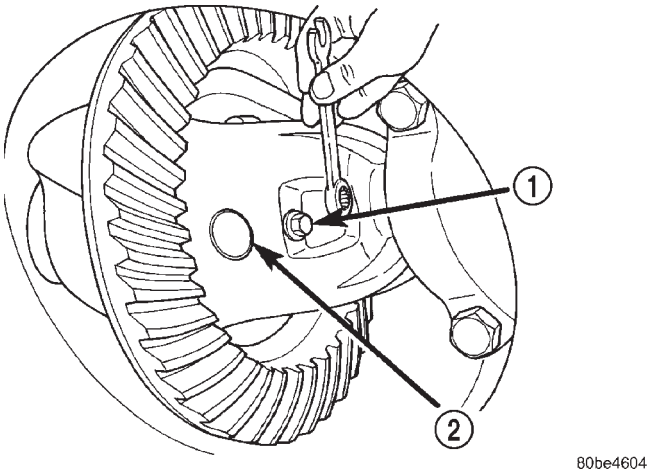

Fig. 51 Pinion Mate Shaft Lock Screw

1 - LOCK SCREW
2 - PINION MATE SHAFT

(2) Remove pinion mate shaft.

(3) Rotate differential side gears and remove the differential pinion gears and thrust washers (Fig. 52).

(4) Remove the differential side gears and thrust washers.

ASSEMBLY

(1) Install the differential side gears and thrust washers.

(2) Install the differential pinion gears and thrust washers.

(3) Install the pinion mate shaft.

(4) Align the hole in the pinion mate shaft with the hole in the differential case and install the pinion mate shaft lock screw.

(5) Lubricate all differential components with hypoid gear lubricant.

INSTALLATION

NOTE: If replacement differential bearings or differential case are being installed, differential side bearing shim requirements may change. Refer Adjustments (Differential Bearing Preload and Gear Backlash) to determine the proper shim selection.

(1) Position Spreader W-129-B, utilizing some items from Adapter set 6987, with the tool dowel pins

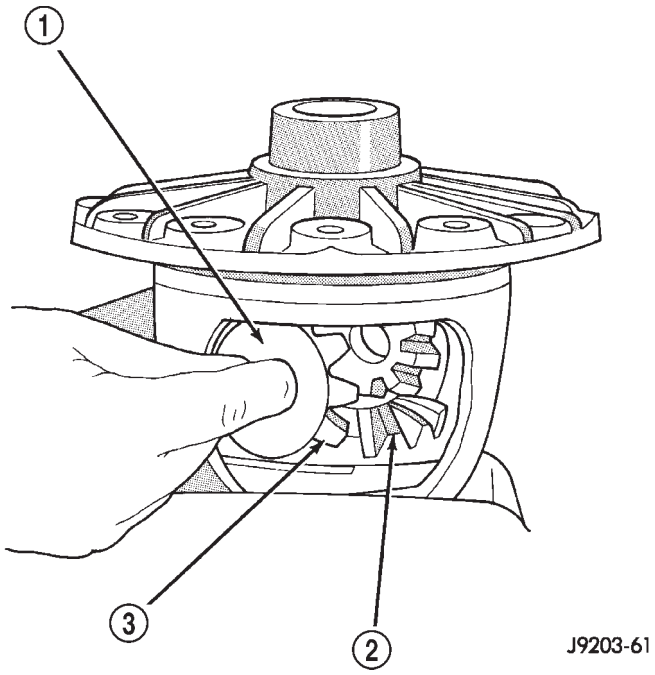

Fig. 52 Pinion Mate Gear

1 - THRUST WASHER
2 - SIDE GEAR
3 - PINION MATE GEAR

seated in the locating holes (Fig. 53). Install the hold-down clamps and tighten the tool turnbuckle finger-tight.

(2) Install a Pilot Stud C-3288-B at the left side of the differential housing. Attach Dial Indicator C-3339 to pilot stud. Load the indicator plunger against the opposite side of the housing and zero the indicator.

CAUTION: Do not spread over 0.38 mm (0.015 in). If the housing is over–spread, it could be distorted or damaged.

(3) Spread the housing enough to install the case in the housing. Measure the distance with the dial indicator.

(4) Remove the dial indicator.

(5) Install differential case in the housing. Ensure that the differential bearing cups remain in position on the differential bearings and that the preload shims remain between the face of the bearing cup and the housing. Tap the differential case to ensure the bearings cups and shims are fully seated in the housing.

NOTE: When installing a Vari-lok™ differential the oil feed tube must be pointed to the bottom of the housing. If differential is installed with the oil feed tube pointed toward the top, the anti-rotation tabs will be damaged.

DIFFERENTIAL (Continued)

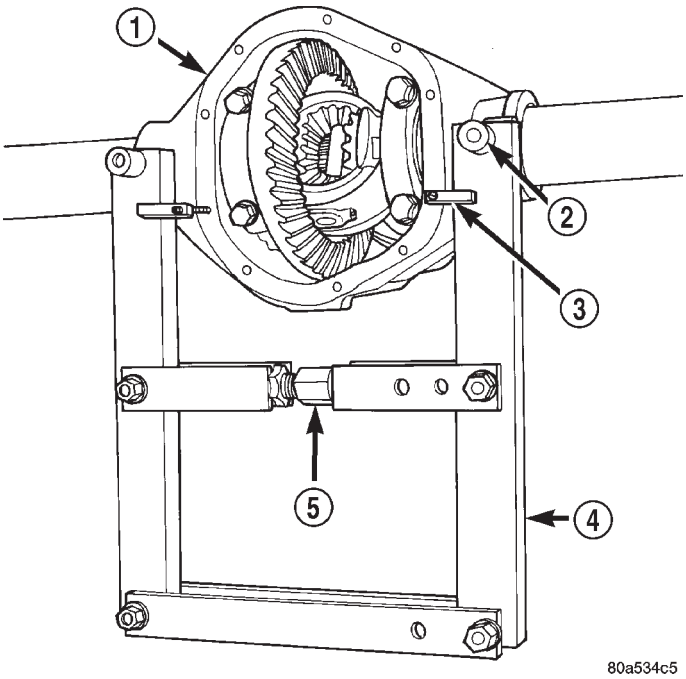

Fig. 53 Spreader Location

1 - DIFFERENTIAL HOUSING
2 - ADAPTER KIT COMPONENTS - 6987
3 - SAFETY HOLD DOWN
4 - SPREADER - W-129-B
5 - TURNBUCKLE

(6) Install the bearing caps in their original locations (Fig. 54).

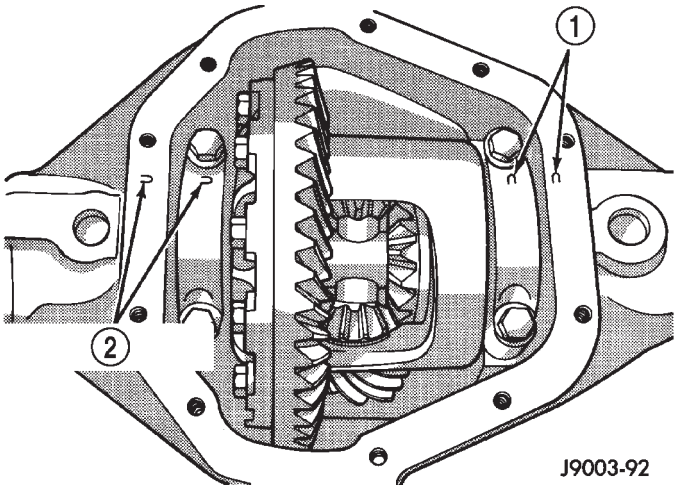

Fig. 54 Bearing Cap Reference

1 - REFERENCE LETTERS
2 - REFERENCE LETTERS

(7) Loosely install differential bearing cap bolts.
(8) Remove axle housing spreader.
(9) Tighten the bearing cap bolts to 77 N·m (57 ft. lbs.).
(10) Install the axle shafts.
(11) Apply a 6.35mm (1/4 in.) bead of Mopar® Silicone Rubber Sealant or equivalent to the housing cover (Fig. 55).

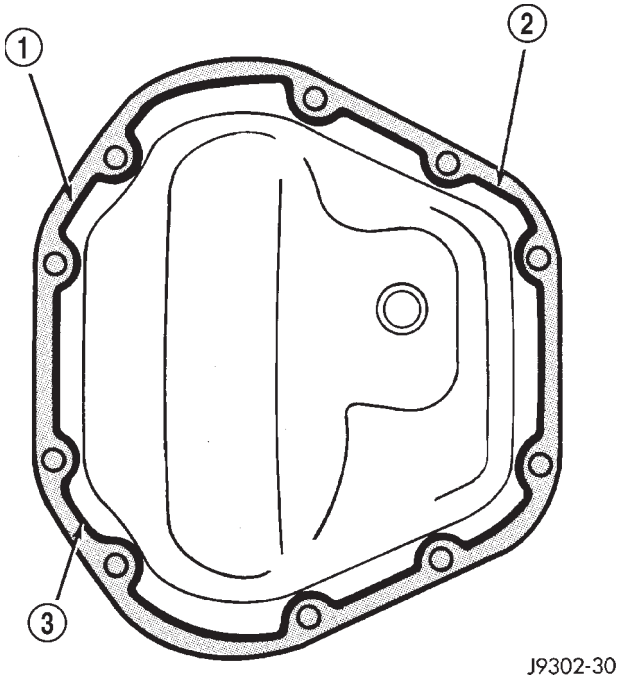

Fig. 55 Differential Cover - Typical

1 - COVER
2 - SEALANT
3 - SEALANT BEAD

Install the housing cover within 5 minutes after applying the sealant.

(12) Install the cover and any identification tag. Tighten the cover bolts in a criss-cross pattern to 41 N·m (30 ft. lbs.).
(13) Refill the differential with Mopar® Hypoid Gear Lubricant or equivalent to bottom of the fill plug hole. Refer to Lubricant Specifications for correct quantity and type.
(14) Install fill hole plug.
(15) Remove support and lower the vehicle.

DIFFERENTIAL - TRAC-LOK

DIAGNOSIS AND TESTING - TRAC-LOK™

The most common problem is a chatter noise when turning corners. Before removing a Trac-lok™ unit for repair, drain, flush and refill the axle with the specified lubricant. A container of Mopar Trac-lok™ Lubricant (friction modifier) should be added after repair service or during a lubricant change.

After changing the lubricant, drive the vehicle and make 10 to 12 slow, figure-eight turns. This maneuver will pump lubricant through the clutches. This

DIFFERENTIAL - TRAC-LOK (Continued)

will correct the condition in most instances. If the chatter persists, clutch damage could have occurred.

DIFFERENTIAL TEST

The differential can be tested without removing the differential case by measuring rotating torque. Make sure brakes are not dragging during this measurement.

(1) Place blocks in front and rear of both front wheels.

(2) Raise one rear wheel until it is completely off the ground.

(3) Engine off, transmission in neutral, and parking brake off.

(4) Remove wheel and bolt Special Tool 6790 or equivalent tool to studs.

(5) Use torque wrench on special tool to rotate wheel and read rotating torque (Fig. 56).

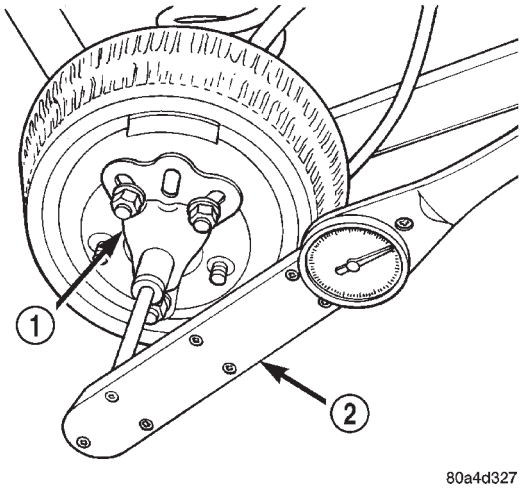

Fig. 56 Trac-lok™ Test -Typical

1 - SPECIAL TOOL 6790 WITH BOLT IN CENTER HOLE
2 - TORQUE WRENCH

(6) If rotating torque is less than 22 N·m (30 ft. lbs.) or more than 271 N·m (200 ft. lbs.) on either wheel the unit should be serviced.

DISASSEMBLY

(1) Clamp side gear Holding Fixture 6965 in a vise and position the differential case on the Holding Fixture (Fig. 57).

(2) Remove ring gear if the ring gear is to be replaced. The Trac-lok™ differential can be serviced with the ring gear installed.

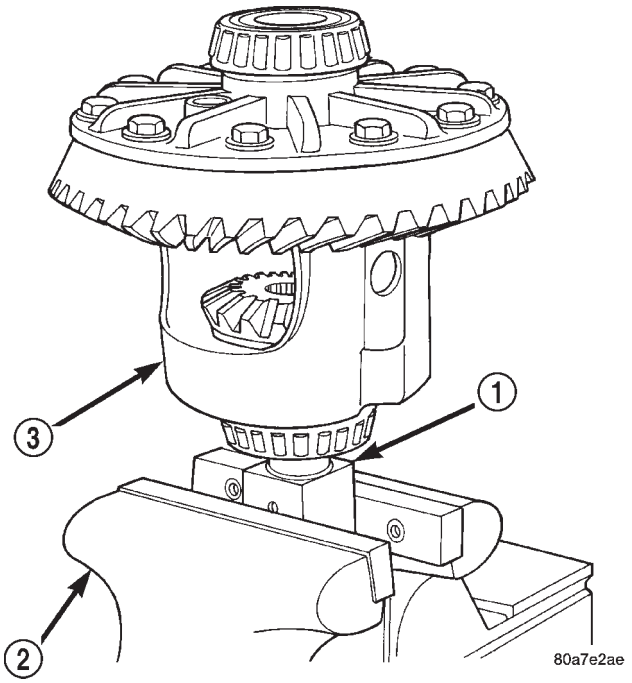

Fig. 57 Differential Case Holding Fixture

1 - FIXTURE - 6965
2 - VISE
3 - DIFFERENTIAL

(3) Remove the pinion gear mate shaft lock screw (Fig. 58).

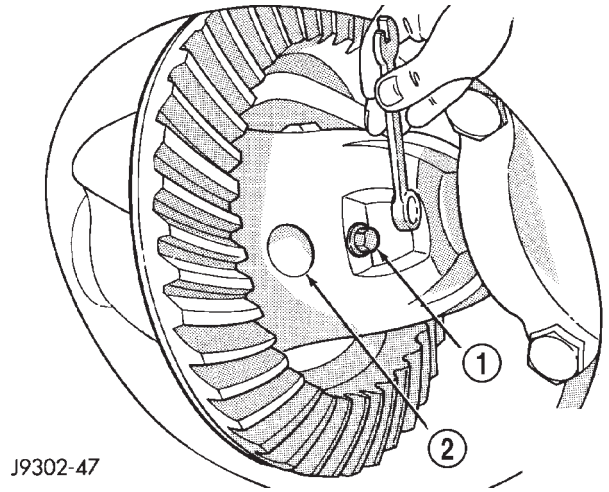

Fig. 58 Mate Shaft Lock Screw

1 - LOCK SCREW
2 - PINION GEAR MATE SHAFT

DIFFERENTIAL - TRAC-LOK (Continued)

(4) Remove pinion gear mate shaft with a drift and hammer (Fig. 59).

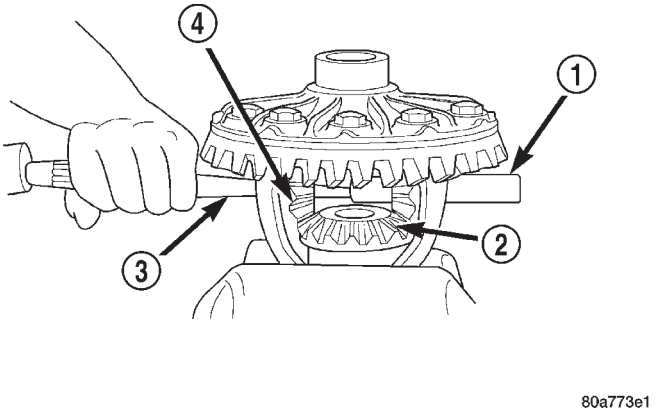

Fig. 59 Mate Shaft

1 - PINION MATE SHAFT
2 - SIDE GEAR
3 - DRIFT
4 - PINION MATE GEAR

(5) Install and lubricate Step Plate C-6960-3 (Fig. 60).

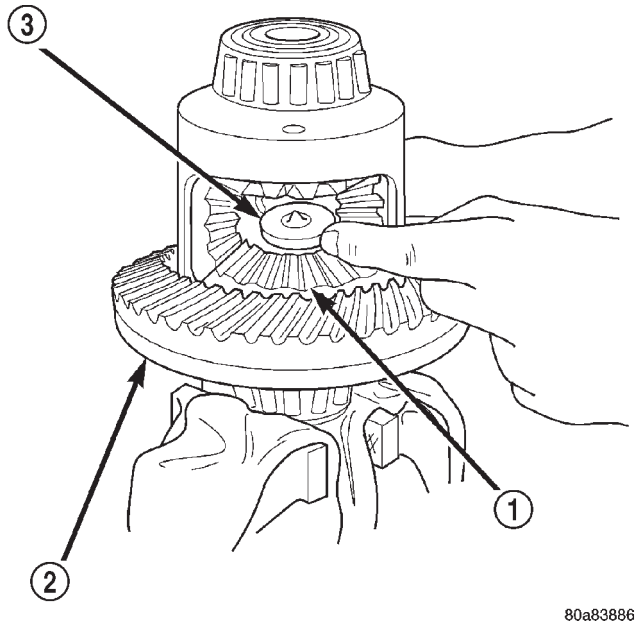

Fig. 60 Step Plate

1 - LOWER SIDE GEAR
2 - DIFFERENTIAL CASE
3 - STEP PLATE - C-6960-3

(6) Assemble Threaded Adapter C-6960-1 into top side gear. Thread Forcing Screw C-6960-4 into adapter until it becomes centered in adapter plate.

(7) Position a small screw driver in slot of Threaded Adapter Disc C-6960-1 (Fig. 61) to prevent adapter from turning.

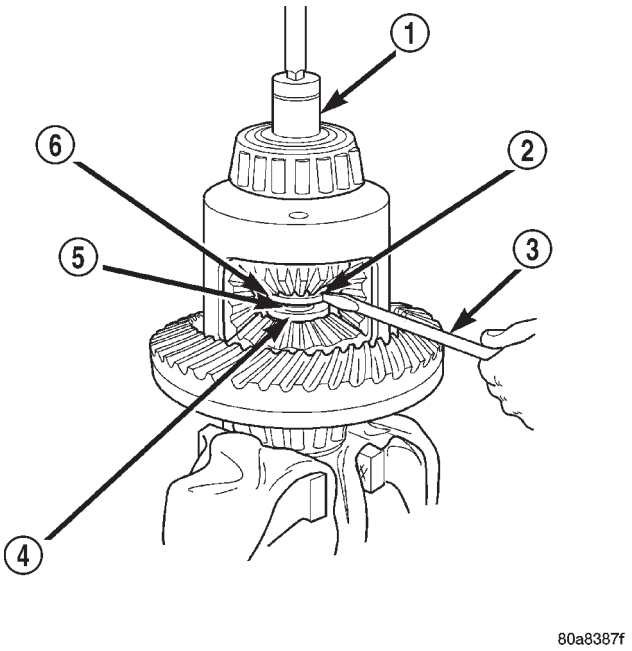

Fig. 61 Threaded Adapter Disc

1 - SOCKET
2 - SLOT IN ADAPTER
3 - SCREWDRIVER
4 - STEP PLATE - C-6960-3
5 - FORCING SCREW - C-6960-4
6 - THREADED ADAPTER DISC - C-6960-1

(8) Install Forcing Screw C-6960-4 and tighten screw to 122 N·m (90 ft. lbs.) maximum to compress Belleville springs in clutch packs (Fig. 62).

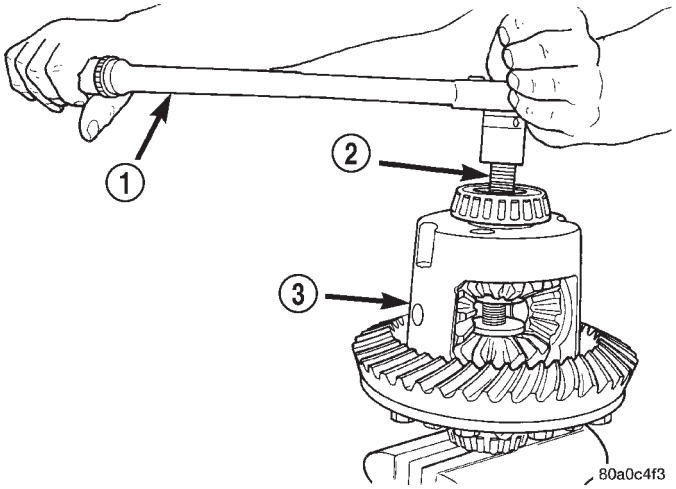

Fig. 62 Compress Belleville Spring

1 - TORQUE WRENCH
2 - TOOL ASSEMBLED
3 - DIFFERENTIAL CASE

(9) With a feeler gauge remove thrust washers from behind the pinion gears (Fig. 63).

DIFFERENTIAL - TRAC-LOK (Continued)

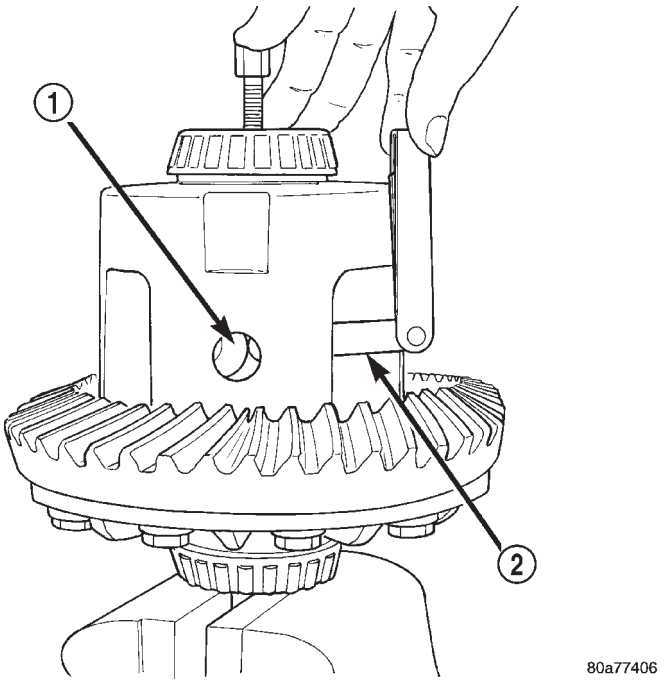

Fig. 63 Pinion Gear Thrust Washer

1 - THRUST WASHER
2 - FEELER GAUGE

(10) Insert Turning Bar C-6960-2 into the pinion mate shaft hole in the case (Fig. 64).

(11) Loosen the Forcing Screw in small increments until the clutch pack tension is relieved and the differential case can be turned using Turning Bar.

(12) Rotate differential case until the pinion gears can be removed.

(13) Remove pinion gears from differential case.

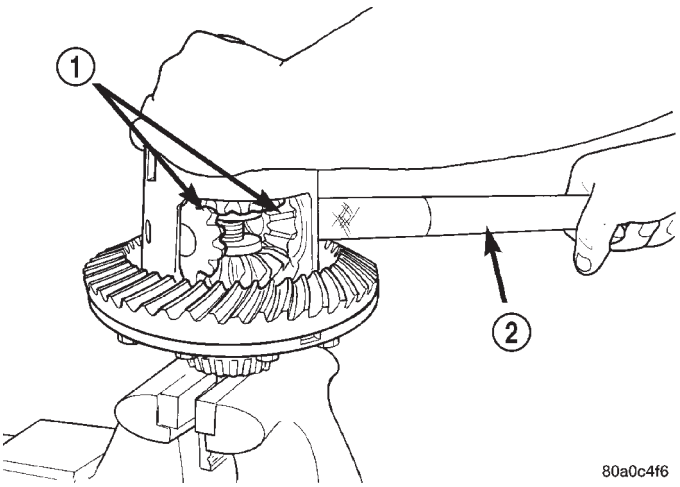

Fig. 64 Pinion Gear

1 - PINION GEARS
2 - TURNING BAR - C-6960-2

(14) Remove Forcing Screw, Step Plate and Threaded Adapter.

(15) Remove top side gear, clutch pack retainer and clutch pack. Keep plates in correct order during removal (Fig. 65).

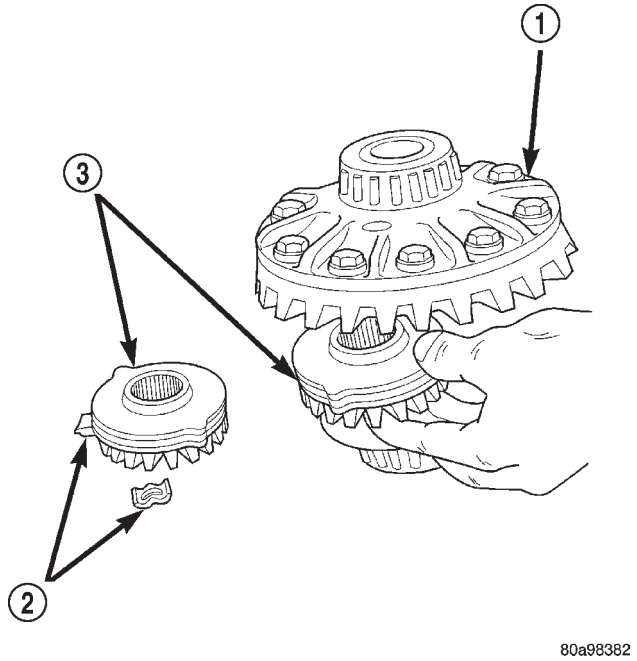

Fig. 65 Side Gear & Clutch Pack

1 - DIFFERENTIAL CASE
2 - RETAINER
3 - SIDE GEAR AND CLUTCH DISC PACK

(16) Remove differential case from the Holding Fixture. Remove side gear, clutch pack retainer and clutch pack. Keep plates in correct order during removal.

ASSEMBLY

Clean all components in cleaning solvent. Dry components with compressed air. Inspect clutch pack plates for wear, scoring or damage. Replace both clutch packs if any one component in either pack is damaged. Inspect side gears and pinions. Replace any gear that is worn, cracked, chipped or damaged. Inspect differential case and pinion shaft. Replace if worn or damaged.

Lubricate each component with gear lubricant before assembly.

(1) Assemble the clutch discs into packs and secure disc packs with retaining clips (Fig. 66).

NOTE: New Plates and discs with fiber coating (no grooves or lines) must be presoaked in Friction Modifier before assembly. Soak plates and discs for a minimum of 20 minutes.

DIFFERENTIAL - TRAC-LOK (Continued)

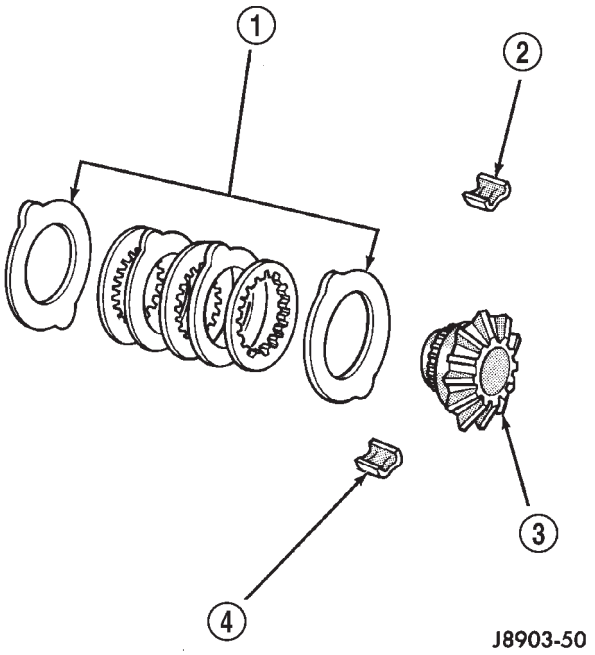

Fig. 66 Clutch Disc Pack

1 - CLUTCH PACK
2 - RETAINER
3 - SIDE GEAR
4 - RETAINER

(2) Position assembled clutch disc packs on the side gear hubs.

(3) Install clutch pack and side gear in the ring gear side of the differential case (Fig. 67). **Be sure clutch pack retaining clips remain in position and are seated in the case pockets.**

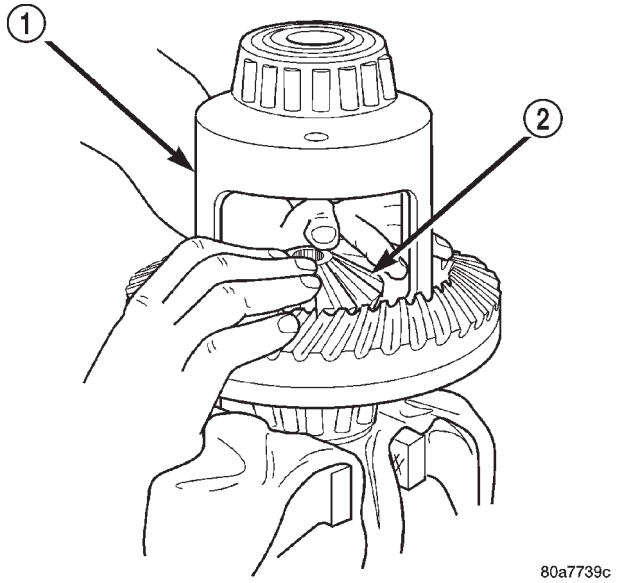

Fig. 67 Clutch Pack and Side Gear

1 - DIFFERENTIAL CASE
2 - SIDE GEAR AND CLUTCH PACK

(4) Position the differential case on the Holding Fixture 6965.

(5) Install lubricated Step Plate C-6960-3 in lower side gear (Fig. 68).

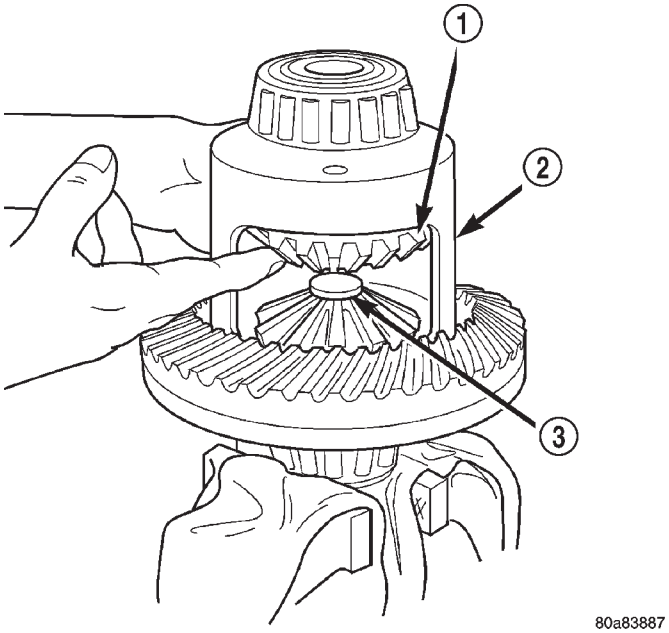

Fig. 68 Clutch Pack and Upper Side Gear

1 - SIDE GEAR AND CLUTCH PACK
2 - DIFFERENTIAL CASE
3 - STEP PLATE - C-6960-3

(6) Install the upper side gear and clutch disc pack (Fig. 68).

(7) Hold assembly in position. Insert Threaded Adapter C-6960-1 into top side gear.

(8) Install Forcing Screw C-6960-4 and tighten screw to slightly compress clutch disc.

(9) Place pinion gears in position in side gears and verify that the pinion mate shaft hole is aligned.

(10) Rotate case with Turning Bar C-6960-2 until the pinion mate shaft holes in pinion gears align with holes in case. It may be necessary to slightly tighten the forcing screw in order to install the pinion gears.

(11) Tighten forcing screw to 122 N·m (90 ft. lbs.) maximum to compress the Belleville springs.

(12) Lubricate and install thrust washers behind pinion gears and align washers with a small screw driver. Insert mate shaft into each pinion gear to verify alignment.

(13) Remove Forcing Screw, Step Plate and Threaded Adapter.

(14) Install pinion gear mate shaft and align holes in shaft and case.

(15) Install pinion mate shaft lock screw finger tight to hold shaft during differential installation.

(16) Lubricate all differential components with hypoid gear lubricant.

DIFFERENTIAL CASE BEARINGS

REMOVAL

(1) Remove differential case from axle housing.

(2) Remove side bearings from the differential case with Puller/Press C-293-PA, Adapters 8353 and Plug C-293-3 (Fig. 69).

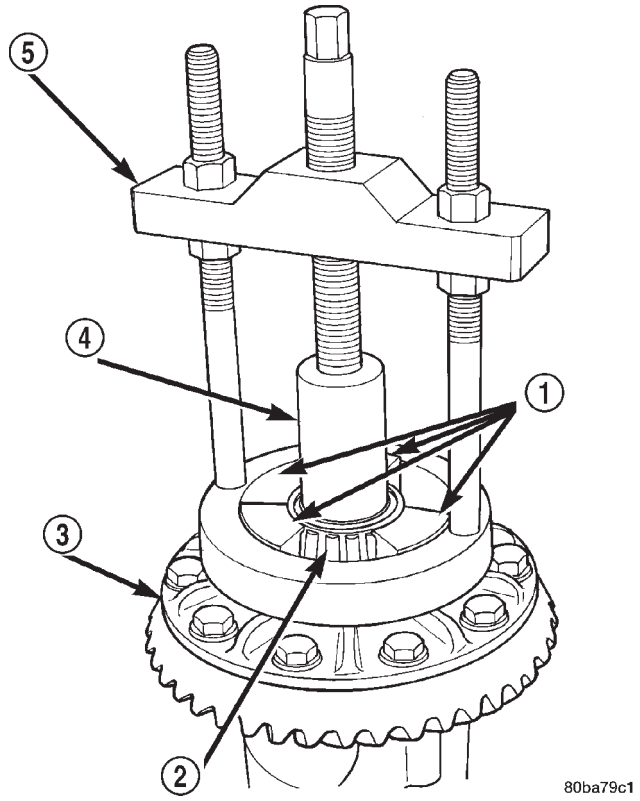

Fig. 69 Differential Bearing Removal

1 - ADAPTERS - 8353
2 - BEARING
3 - DIFFERENTIAL
4 - PLUG - C-293-3
5 - PULLER - C-293-PA

INSTALLATION

If differential side bearings or differential case are replaced, differential side bearing shim requirements may change. Refer to Adjustments (Differential Bearing Preload and Gear Backlash) for procedures.

CAUTION: Ensure Vari-lok™ plenum is fully seated against the differential case prior to installing the ring gear side differential bearing.

(1) Install differential side bearings with Installer C-4340 and Handle C-4171 (Fig. 70).

(2) Install differential case in axle housing.

(3) Remove support and lower vehicle.

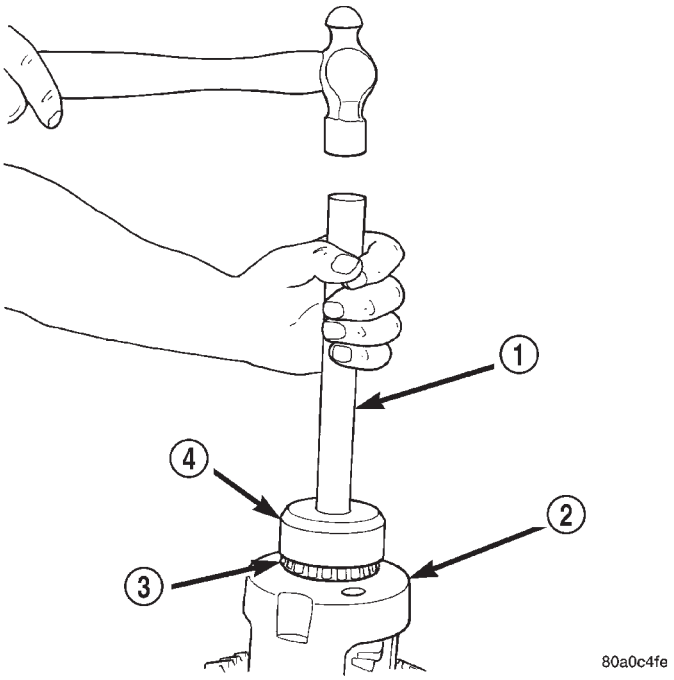

Fig. 70 Install Differential Side Bearings

1 - HANDLE - C-4171
2 - DIFFERENTIAL
3 - BEARING
4 - INSTALLER - C-4340

PINION GEAR/RING GEAR

REMOVAL

NOTE: The ring and pinion gears are serviced as a matched set. Never replace one gear without the other gear.

(1) Raise and support vehicle.

(2) Mark pinion yoke and propeller shaft for installation reference.

(3) Disconnect propeller shaft from pinion yoke and tie shaft to underbody.

(4) Remove differential from axle housing.

(5) Place differential case in a vise with soft metal jaw.

(6) Remove bolts holding ring gear to differential case.

(7) Drive ring gear from differential case with a rawhide hammer (Fig. 71).

(8) Hold the pinion yoke with Spanner Wrench 6958 and remove the pinion yoke nut and washer (Fig. 72).

(9) Remove pinion yoke from pinion shaft with Remover C-452 and Wrench C-3281 (Fig. 73).

(10) Remove pinion gear from housing (Fig. 74).

PINION GEAR/RING GEAR (Continued)

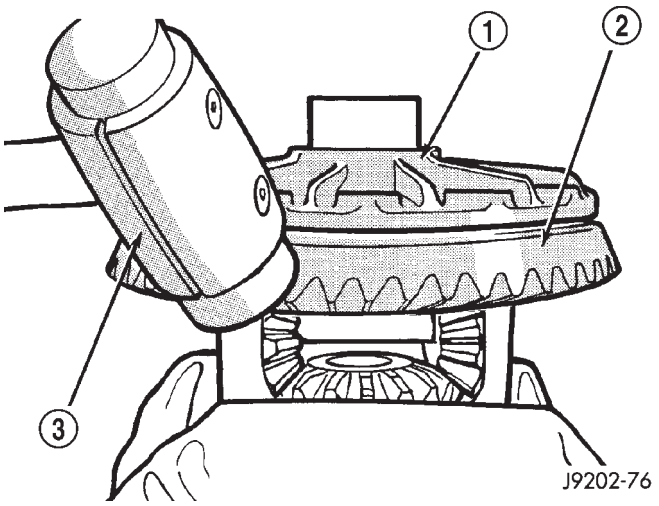

Fig. 71 Ring Gear

1 - DIFFERENTIAL CASE
2 - RING GEAR
3 - RAWHIDE HAMMER

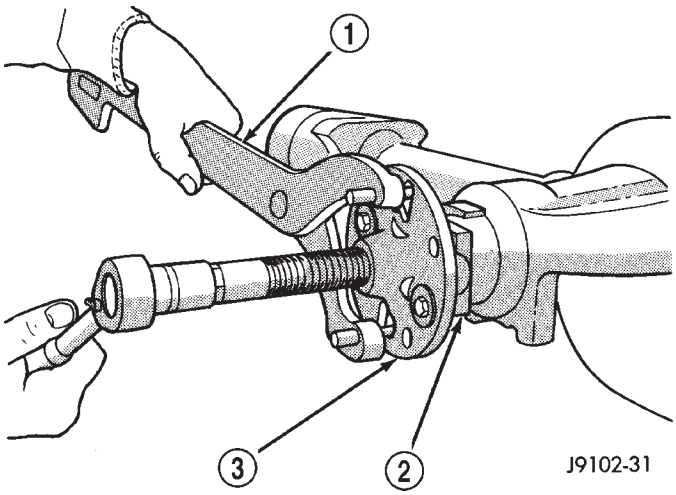

Fig. 73 Pinion Yoke Remover

1 - SPECIAL TOOL C-3281
2 - YOKE
3 - SPECIAL TOOL C-452

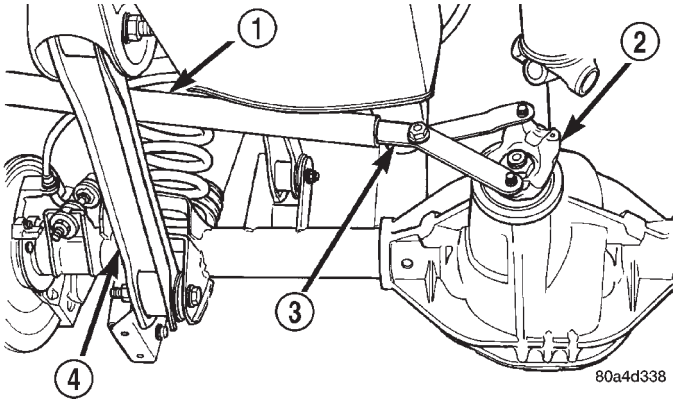

Fig. 72 Pinion Yoke Holder

1 - PIPE
2 - PINION YOKE
3 - WRENCH - 6958
4 - LOWER CONTROL ARM

(11) Remove pinion seal with Remover 7794-A and a slide hammer (Fig. 75).

(12) Remove oil slinger, if equipped, and front pinion bearing.

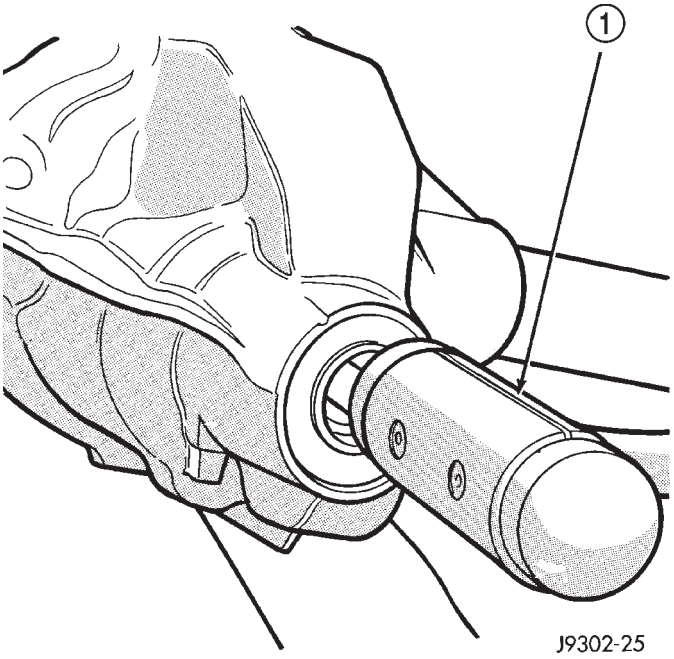

Fig. 74 Pinion Gear

1 - RAWHIDE HAMMER

PINION GEAR/RING GEAR (Continued)

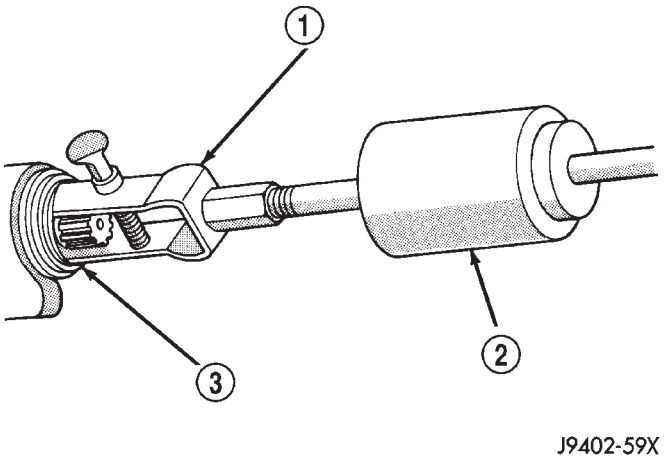

Fig. 75 Pinion Seal Remover

1 - REMOVER - 7794-A
2 - SLIDE HAMMER
3 - PINION SEAL

(13) Remove the front pinion bearing cup with Remover D-103 and Handle C-4171 (Fig. 76).

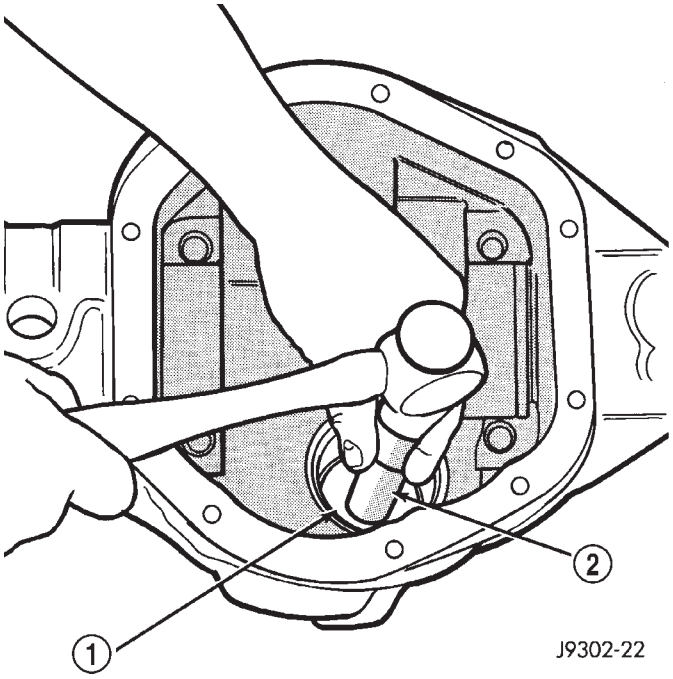

Fig. 76 Front Pinion Bearing Cup

1 - REMOVER - D-103
2 - HANDLE - C-4171

(14) Remove rear bearing cup from housing (Fig. 77) with Remover C-4307 and Handle C-4171.

(15) Remove collapsible preload spacer (Fig. 78).

(16) Remove rear bearing from the pinion with Puller/Press C-293-PA and Adapters C-293-42 (Fig. 79).

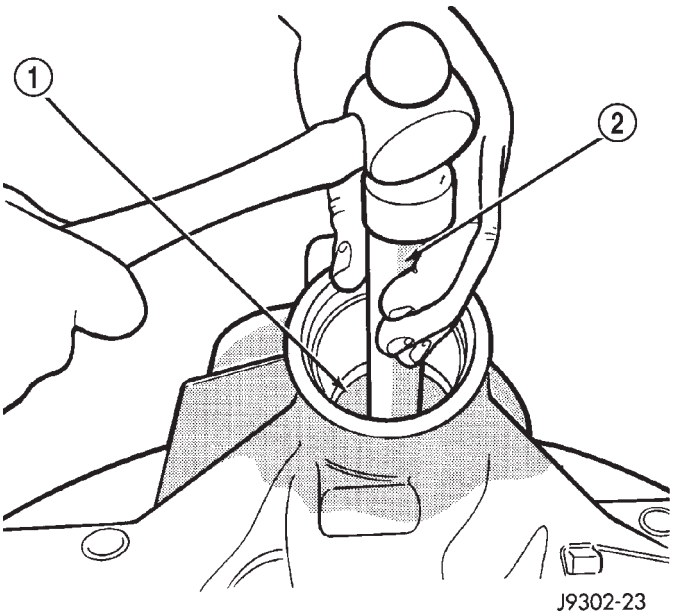

Fig. 77 Rear Pinion Bearing Cup

1 - DRIVER - C-4307
2 - HANDLE - C-4171

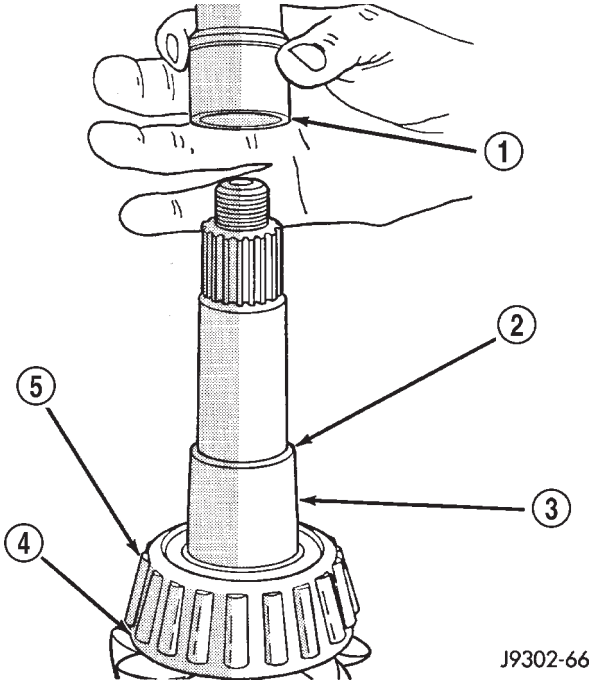

Fig. 78 Collapsible Spacer

1 - COLLAPSIBLE SPACER
2 - SHOULDER
3 - PINION GEAR
4 - OIL SLINGER
5 - REAR BEARING

(17) Remove depth shims from the pinion gear shaft and record shim thickness.

PINION GEAR/RING GEAR (Continued)

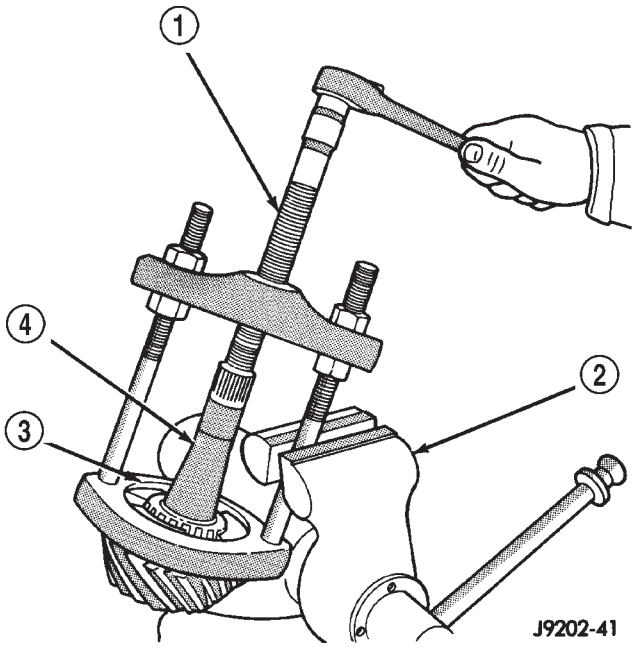

Fig. 79 Rear Pinion Bearing Puller

1 - PULLER - C-293-PA
2 - VISE
3 - ADAPTERS - C-293-42
4 - PINION GEAR SHAFT

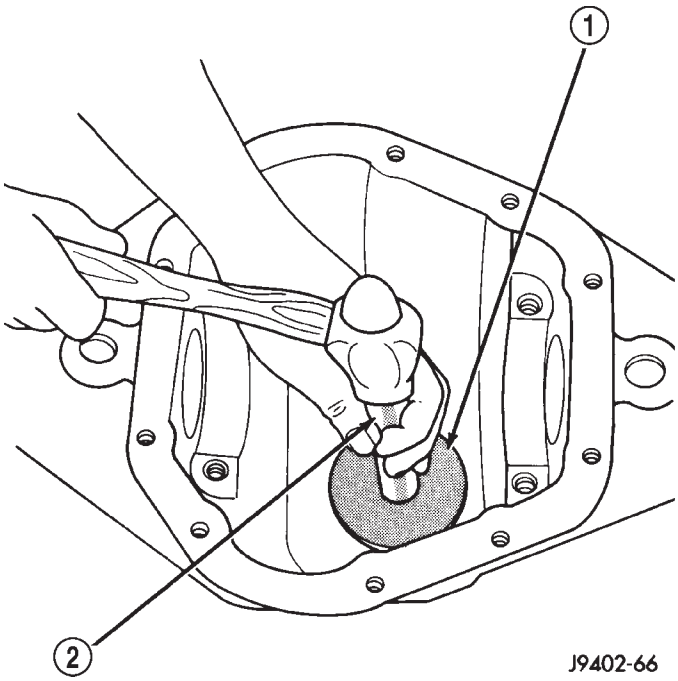

Fig. 80 Rear Pinion Bearing Cup

1 - INSTALLER
2 - HANDLE

INSTALLATION

NOTE: A pinion depth shim/oil slinger is placed between the rear pinion bearing cone and the pinion head to achieve proper ring gear and pinion mesh. If ring gear and pinion are reused, the pinion depth shim/oil slinger should not require replacement. Refer to Adjustment (Pinion Gear Depth) to select the proper thickness shim/oil slinger if ring and pinion gears are replaced.

(1) Apply Mopar® Door Ease or equivalent lubricant to outside surface of bearing cup.

(2) Install pinion rear bearing cup with Installer C-4308 and Driver Handle C-4171 (Fig. 80) and verify cup is seated.

(3) Apply Mopar® Door Ease or equivalent lubricant to outside surface of bearing cup.

(4) Install pinion front bearing cup with Installer D-129 and Handle C-4171 (Fig. 81) and verify cup is seated.

(5) Install pinion front bearing and oil slinger, if equipped.

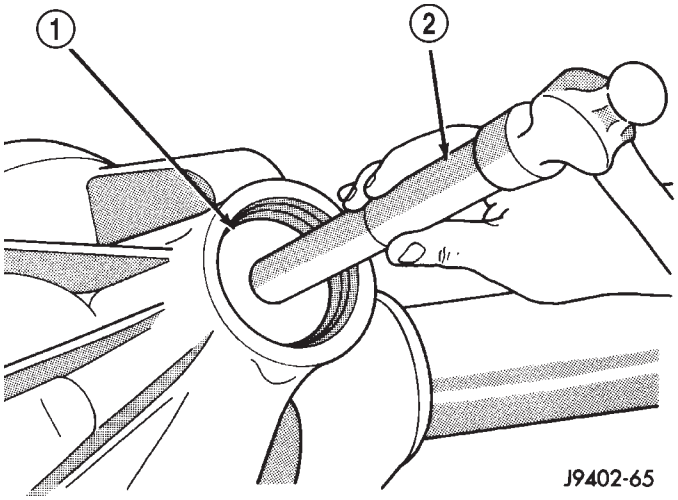

Fig. 81 Front Pinion Bearing Cup

1 - INSTALLER
2 - HANDLE

(6) Apply a light coating of gear lubricant on the lip of pinion seal. Install seal with Installer D-163 and Handle C-4171 (Fig. 82).

PINION GEAR/RING GEAR (Continued)

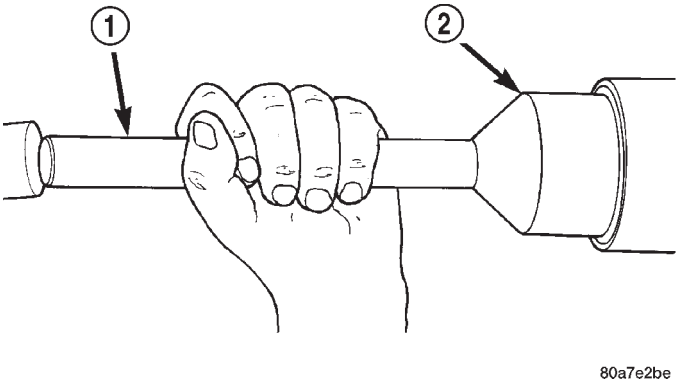

Fig. 82 Pinion Seal Installer

1 - SPECIAL TOOL C-4171
2 - SPECIAL TOOL C-3972–A

(7) Install depth shim on the pinion gear.

(8) Install rear bearing and slinger if equipped, on the pinion gear with Installer 6448 and a press (Fig. 83).

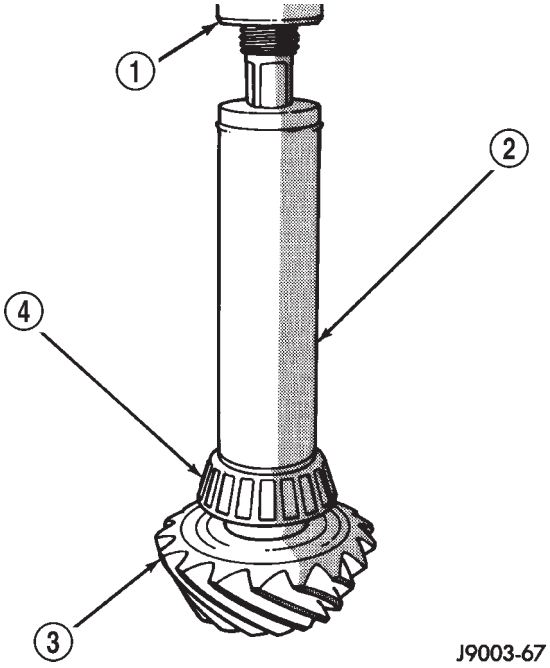

Fig. 83 Rear Pinion Bearing

1 - PRESS
2 - INSTALLATION TOOL
3 - DRIVE PINION GEAR
4 - DRIVE PINION GEAR SHAFT REAR BEARING

(9) Install a **new** collapsible preload spacer on pinion shaft and install pinion gear in the housing (Fig. 84).

(10) Install yoke with Installer C-3718 and Spanner Wrench 6958 (Fig. 85).

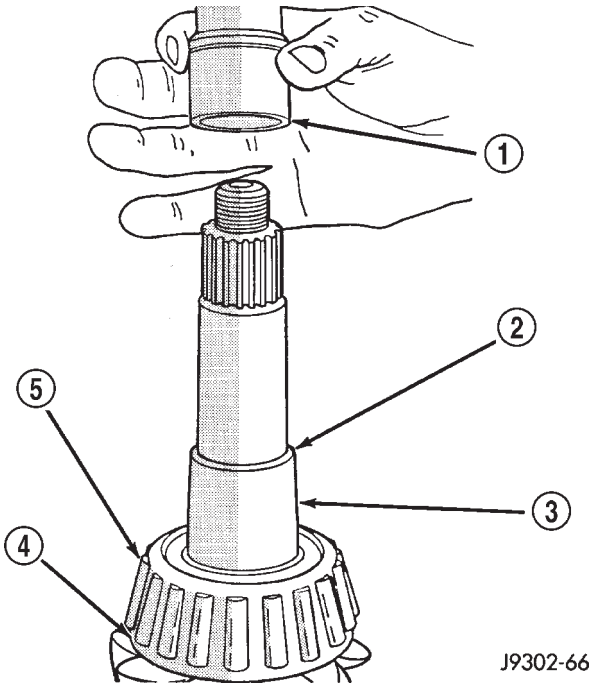

Fig. 84 Collapsible Preload Spacer

1 - COLLAPSIBLE SPACER
2 - SHOULDER
3 - PINION GEAR
4 - OIL SLINGER
5 - REAR BEARING

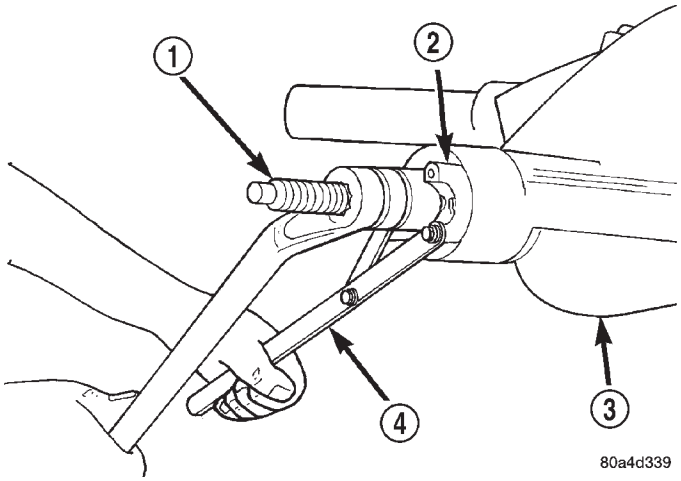

Fig. 85 Pinion Yoke Installer

1 - INSTALLER - C-3718
2 - PINION YOKE
3 - AXLE HOUSING
4 - SPANNER WRENCH - 6958

(11) Install the yoke washer and a new nut on the pinion gear and tighten the pinion nut until there is zero bearing end-play.

(12) Tighten the nut to 298 N·m (220 ft. lbs.).

PINION GEAR/RING GEAR (Continued)

CAUTION: Never loosen pinion gear nut to decrease pinion gear bearing rotating torque and never exceed specified preload torque. If preload torque or rotating torque is exceeded a new collapsible spacer must be installed.

(13) Using Spanner Wrench 6958 and a torque wrench set at 380 N·m (280 ft. lbs.), (Fig. 86) slowly tighten the nut in 6.8 N·m (5 ft. lbs.) increments until the rotating torque is achieved. Measure the rotating torque frequently to avoid over crushing the collapsible spacer (Fig. 87).

NOTE: If more than 380 N·m (280 ft. lbs.) torque is required to crush the collapsible spacer, the spacer is defective and must be replaced.

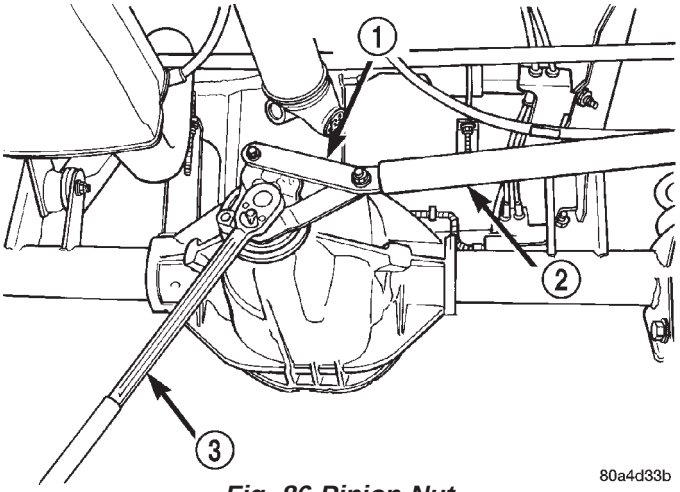

Fig. 86 Pinion Nut

1 - SPANNER WRENCH - 6958
2 - PIPE
3 - TORQUE WRENCH

(14) Check bearing rotating torque with a inch pound torque wrench (Fig. 87). The pinion gear rotating torque should be:

- Original Bearings: 1 to 2.25 N·m (10 to 20 in. lbs.).
- New Bearings: 2.8 to 4 N·m (25 to 35 in. lbs.).

(15) Invert the differential case and start two ring gear bolts. This will provide case-to-ring gear bolt hole alignment.

(16) Invert the differential case in the vise.

(17) Install new ring gear bolts and alternately tighten to 95-122 N·m (70-90 ft. lbs.) (Fig. 88).

CAUTION: Do not reuse the bolts that held the ring gear to the differential case. The bolts can fracture causing extensive damage.

NOTE: If equipped with Veri-Lok differential install oil feed plenum and side bearing.

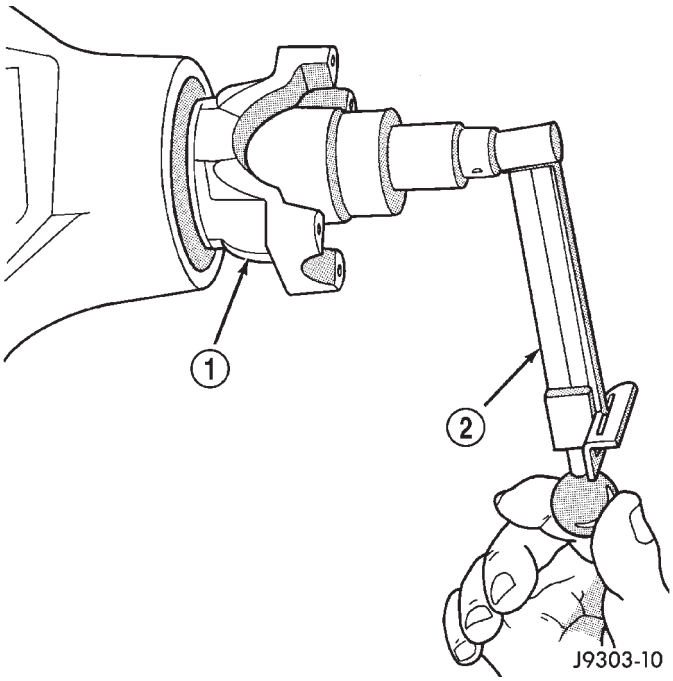

Fig. 87 Pinion Gear Rotating Torque

1 - PINION YOKE
2 -TORQUE WRENCH

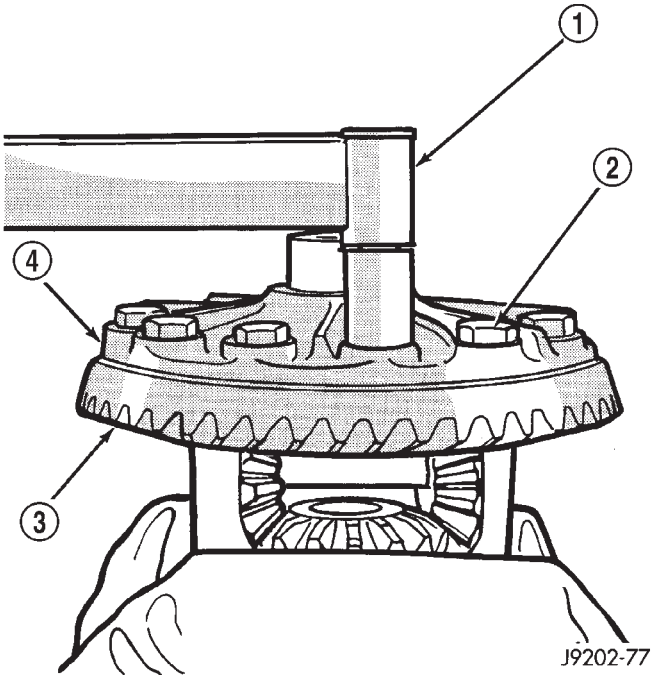

Fig. 88 Ring Gear

1 - TORQUE WRENCH
2 - RING GEAR BOLT
3 - RING GEAR
4 - CASE

(18) Install differential in housing.

PINION GEAR/RING GEAR (Continued)

NOTE: When installing a Vari-lok™ differential the oil feed tube must be pointed to the bottom of the housing. If differential is installed with the oil feed tube pointed toward the top, the anti-rotation tabs will be damaged.

(19) Verify differential bearing preload, gear mesh and contact pattern. Refer to Ajustments for procedure.

(20) Install differential cover and fill with gear lubricant.

(21) Install the propeller shaft with the reference marks aligned.

(22) Remove supports and lower vehicle.

BRAKES

TABLE OF CONTENTS

page

BRAKES - BASE 1

BRAKES - ABS 36

BRAKES - BASE

TABLE OF CONTENTS

page

BRAKES - BASE
DESCRIPTION 2
DIAGNOSIS AND TESTING 2
BASE BRAKE SYSTEM 2
STANDARD PROCEDURE 4
MANUAL BLEEDING 4
PRESSURE BLEEDING 5
SPECIFICATIONS 5
SPECIAL TOOLS 6
BRAKE FLUID LEVEL SWITCH
REMOVAL 6
INSTALLATION 7
RED BRAKE WARNING INDICATOR SWITCH
DESCRIPTION 7
OPERATION 7
DIAGNOSIS AND TESTING 7
RED BRAKE WARNING LAMP 7
BRAKE LINES
DESCRIPTION 7
DIAGNOSIS AND TESTING 7
BRAKE LINE AND HOSES 7
STANDARD PROCEDURE 7
DOUBLE INVERTED FLARING 7
ISO FLARING 8
BRAKE PADS / SHOES
DESCRIPTION 8
OPERATION 9
REMOVAL 10
INSTALLATION 12
DISC BRAKE CALIPERS
REMOVAL 13
DISASSEMBLY 14
CLEANING 17
INSPECTION 17
ASSEMBLY 18
INSTALLATION 19

page

FLUID
DIAGNOSIS AND TESTING 20
BRAKE FLUID CONTAMINATION 20
SPECIFICATIONS 20
FLUID RESERVOIR
REMOVAL 21
INSTALLATION 21
MASTER CYLINDER
DESCRIPTION 21
OPERATION 21
DIAGNOSIS AND TESTING 21
MASTER CYLINDER/POWER BOOSTER 21
STANDARD PROCEDURE 22
MASTER CYLINDER BLEEDING PROCEDURE 22
REMOVAL 23
INSTALLATION 23
PEDAL
DESCRIPTION 23
OPERATION 23
REMOVAL 23
INSTALLATION 23
POWER BRAKE BOOSTER
DESCRIPTION 24
OPERATION 24
REMOVAL 24
INSTALLATION 25
ROTORS
DIAGNOSIS AND TESTING 26
FRONT DISC BRAKE ROTOR 26
REAR DISC BRAKE ROTOR 27
STANDARD PROCEDURE 27
DISC ROTOR MACHINING 27
REMOVAL 27
INSTALLATION 28

PARKING BRAKE
OPERATION. 28
DIAGNOSIS AND TESTING 29
PARKING BRAKE 29
CABLES
REMOVAL 29
INSTALLATION. 31
LEVER
REMOVAL 32
INSTALLATION. 33
SHOES
REMOVAL 33
INSTALLATION. 35
ADJUSTMENTS 35

BRAKES - BASE

DESCRIPTION

Dual piston disc brake calipers are used on the front. Single piston disc brake calipers are used on the rear. Ventilated disc brake rotors are used on the front and solid rotors are used on the rear.

Power brake assist is supplied by a vacuum operated, dual diaphragm power brake booster. The master cylinder used for all applications has an aluminum body and nylon reservoir with single filler cap. A fluid level indicator is mounted to the side of the reservoir.

The braking force of the rear wheels is controlled by electronic brake distribution (EBD). The EBD functions like a rear proportioning valve. The EBD system uses the ABS system to control the slip of the rear wheels in partial braking range. The braking force of the rear wheels is controlled electronically by using the inlet and outlet valves located in the HCU.

Factory installed brake linings on all models consists of organic base material combined with metallic particles.

DIAGNOSIS AND TESTING - BASE BRAKE SYSTEM

Base brake components consist of the brake shoes, calipers, rear park brake drums/rotors, front brake rotors, brake lines, master cylinder, booster, HCU and parking brake shoes.

Brake diagnosis involves determining if the problem is related to a mechanical, hydraulic, electrical or vacuum operated component.

The first diagnosis step is the preliminary check.

PRELIMINARY BRAKE CHECK

(1) Check condition of tires and wheels. Damaged wheels and worn, damaged, or underinflated tires can cause pull, shudder, vibration, and a condition similar to grab.

(2) If complaint was based on noise when braking, check suspension components. Jounce front and rear of vehicle and listen for noise that might be caused by loose, worn or damaged suspension or steering components.

(3) Inspect brake fluid level and condition. Note that the brake reservoir fluid level will decrease in proportion to normal lining wear. **Also note that brake fluid tends to darken over time. This is normal and should not be mistaken for contamination.**

(a) If fluid level is abnormally low, look for evidence of leaks at calipers, brake lines, master cylinder, and HCU.

(b) If fluid appears contaminated, drain out a sample to examine. System will have to be flushed if fluid is separated into layers, or contains a substance other than brake fluid. The system seals, cups, hoses, master cylinder, and HCU will also have to be replaced after flushing. Use clean brake fluid to flush the system.

(4) Check parking brake operation. Verify free movement and full release of cables and lever. Also note if vehicle was being operated with parking brake partially applied.

(5) Check brake pedal operation. Verify that pedal does not bind and has adequate free play. If pedal lacks free play, check pedal and power booster for being loose or for bind condition. Do not road test until condition is corrected.

(6) Check booster vacuum check valve and hose.

(7) If components checked appear OK, road test the vehicle.

ROAD TESTING

(1) If complaint involved low brake pedal, pump pedal and note if it comes back up to normal height.

(2) Check brake pedal response with transmission in neutral and engine running. Pedal should remain firm under constant foot pressure.

(3) During road test, make normal and firm brake stops in 25-40 mph range. Note faulty brake operation such as low pedal, hard pedal, fade, pedal pulsation, pull, grab, drag, noise, etc.

(4) Attempt to stop the vehicle with the parking brake only (do not exceed 25 mph) and note grab, drag, noise, etc.

PEDAL FALLS AWAY

A brake pedal that falls away under steady foot pressure is generally the result of a system leak. The leak point could be at a brake line, fitting, hose, or caliper. If leakage is severe, fluid will be evident at or around the leaking component.

Internal leakage (seal by-pass) in the master cylinder caused by worn or damaged piston cups, may also be the problem cause.

BRAKES - BASE (Continued)

An internal leak in the ABS system may also be the problem with no visual fluid leak.

LOW PEDAL

If a low pedal is experienced, pump the pedal several times. If the pedal comes back up, the most likely causes are worn linings, rotors, or calipers are not sliding on the slide pins. The proper course of action is to inspect and replace all worn component.

SPONGY PEDAL

A spongy pedal is most often caused by air in the system. However substandard brake hoses can cause a spongy pedal. The proper course of action is to bleed the system, and replace substandard quality brake hoses if suspected.

HARD PEDAL OR HIGH PEDAL EFFORT

A hard pedal or high pedal effort may be due to lining that is water soaked, contaminated, glazed, or badly worn. The power booster, check valve, check valve seal/grommet or vacuum leak could also cause a hard pedal or high pedal effort.

PEDAL PULSATION

Pedal pulsation is caused by components that are loose, or beyond tolerance limits.

The primary cause of pulsation are disc brake rotors with excessive lateral runout or thickness variation. Other causes are loose wheel bearings or calipers and worn, damaged tires.

NOTE: Some pedal pulsation may be felt during ABS activation.

BRAKE DRAG

Brake drag occurs when the lining is in constant contact with the rotor or drum. Drag can occur at one wheel, all wheels, fronts only, or rears only.

Drag is a product of incomplete brake release. Drag can be minor or severe enough to overheat the linings, rotors and park brake drums.

Minor drag will usually cause slight surface charring of the lining. It can also generate hard spots in rotors and park brake drums from the overheat-cool down process. In most cases, the rotors, wheels and tires are quite warm to the touch after the vehicle is stopped.

Severe drag can char the brake lining all the way through. It can also distort and score rotors to the point of replacement. The wheels, tires and brake components will be extremely hot. In severe cases, the lining may generate smoke as it chars from overheating.

Common causes of brake drag are:

- Parking brake partially applied.
- Loose/worn wheel bearing.
- Seized caliper.
- Caliper binding.
- Loose caliper mounting.
- Mis-assembled components.
- Damaged brake lines.

If brake drag occurs at the front, rear or all wheels, the problem may be related to a blocked master cylinder return port, faulty power booster (binds-does not release) or the ABS system.

BRAKE FADE

Brake fade is usually a product of overheating caused by brake drag. However, brake overheating and resulting fade can also be caused by riding the brake pedal, making repeated high deceleration stops in a short time span, or constant braking on steep mountain roads. Refer to the Brake Drag information in this section for causes.

BRAKE PULL

Front brake pull condition could result from:

- Contaminated lining in one caliper
- Seized caliper piston
- Binding caliper
- Loose caliper
- Rusty caliper slide surfaces
- Improper brake shoes
- Damaged rotor
- Wheel alignment.
- Tire pressure.

A worn, damaged wheel bearing or suspension component are further causes of pull. A damaged front tire (bruised, ply separation) can also cause pull.

A common and frequently misdiagnosed pull condition is where direction of pull changes after a few stops. The cause is a combination of brake drag followed by fade at one of the brake units.

As the dragging brake overheats, efficiency is so reduced that fade occurs. Since the opposite brake unit is still functioning normally, its braking effect is magnified. This causes pull to switch direction in favor of the normally functioning brake unit.

An additional point when diagnosing a change in pull condition concerns brake cool down. Remember that pull will return to the original direction, if the dragging brake unit is allowed to cool down (and is not seriously damaged).

REAR BRAKE DRAG OR PULL

Rear drag or pull may be caused by improperly adjusted park brake shoes or seized parking brake cables, contaminated lining, bent or binding shoes or improperly assembled components. This is particularly true when only one rear wheel is involved.

BRAKES - BASE (Continued)

However, when both rear wheels are affected, the master cylinder or ABS system could be at fault.

BRAKES DO NOT HOLD AFTER DRIVING THROUGH DEEP WATER PUDDLES

This condition is generally caused by water soaked lining. If the lining is only wet, it can be dried by driving with the brakes very lightly applied for a mile or two. However, if the lining is both soaked and dirt contaminated, cleaning and or replacement will be necessary.

BRAKE LINING CONTAMINATION

Brake lining contamination is mostly a product of leaking calipers or worn seals, driving through deep water puddles, or lining that has become covered with grease and grit during repair. Contaminated lining should be replaced to avoid further brake problems.

WHEEL AND TIRE PROBLEMS

Some conditions attributed to brake components may actually be caused by a wheel or tire problem.

A damaged wheel can cause shudder, vibration and pull. A worn or damaged tire can also cause pull.

NOTE: Propshaft angle can also cause vibration/ shudder.

Severely worn tires with very little tread left can produce a grab-like condition as the tire loses and recovers traction. Flat-spotted tires can cause vibration and generate shudder during brake operation. Tire damage such as a severe bruise, cut, ply separation, low air pressure can cause pull and vibration.

BRAKE NOISES

Some brake noise is common on some disc brakes during the first few stops after a vehicle has been parked overnight or stored. This is primarily due to the formation of trace corrosion (light rust) on metal surfaces. This light corrosion is typically cleared from the metal surfaces after a few brake applications causing the noise to subside.

BRAKE SQUEAK/SQUEAL

Brake squeak or squeal may be due to linings that are wet or contaminated with brake fluid, grease, or oil. Glazed linings and rotors with hard spots can also contribute to squeak. Dirt and foreign material embedded in the brake lining will also cause squeak/ squeal.

A very loud squeak or squeal is frequently a sign of severely worn brake lining. If the lining has worn through to the brake shoes in spots, metal-to-metal contact occurs. If the condition is allowed to continue, rotors may become so scored that replacement is necessary.

NOTE: The front outer brake shoes are equipped with a wear indicator. The indicator will produce an audible noise when it contacts the rotor surface.

BRAKE CHATTER

Brake chatter is usually caused by loose or worn components, or glazed/burnt lining. Rotors with hard spots can also contribute to chatter. Additional causes of chatter are out-of-tolerance rotors, brake lining not securely attached to the shoes, loose wheel bearings and contaminated brake lining.

THUMP/CLUNK NOISE

Thumping or clunk noises during braking are frequently **not** caused by brake components. In many cases, such noises are caused by loose or damaged steering, suspension, or engine components.

STANDARD PROCEDURE - MANUAL BLEEDING

Use Mopar brake fluid, or an equivalent quality fluid meeting SAE J1703-F and DOT 3 standards only. Use fresh, clean fluid from a sealed container at all times.

Do not pump the brake pedal at any time while bleeding. Air in the system will be compressed into small bubbles that are distributed throughout the hydraulic system. This will make additional bleeding operations necessary.

Do not allow the master cylinder to run out of fluid during bleed operations. An empty cylinder will allow additional air to be drawn into the system. Check the cylinder fluid level frequently and add fluid as needed.

Bleed only one brake component at a time in the following sequence:

(1) Fill the master cylinder reservoir with brake fluid.

(2) If calipers are overhauled, open all caliper bleed screws. Then close each bleed screw as fluid starts to drip from it. Top off master cylinder reservoir once more before proceeding.

(3) Attach one end of bleed hose to bleed screw and insert opposite end in glass container partially filled with brake fluid (Fig. 1). Be sure end of bleed hose is immersed in fluid.

(4) Open up bleeder, then have a helper press down the brake pedal. Once the pedal is down close the bleeder. Repeat bleeding until fluid stream is clear and free of bubbles. Then move to the next wheel.

BRAKES - BASE (Continued)

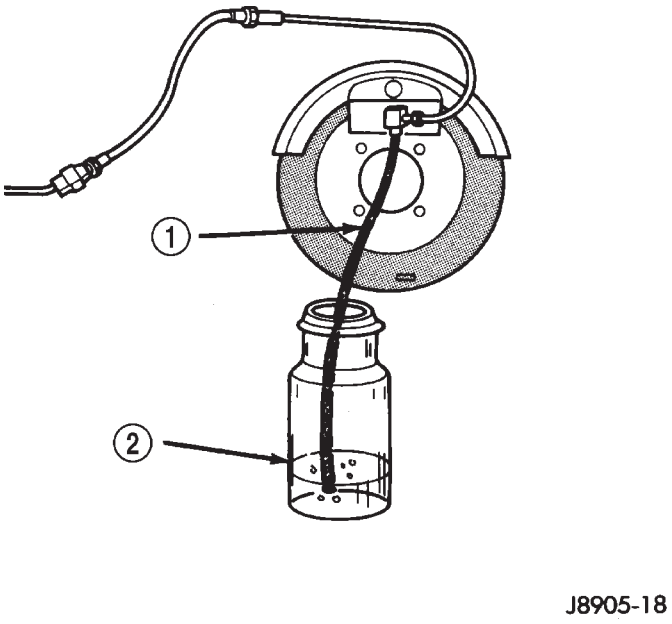

Fig. 1 Bleed Hose Setup

1 - BLEED HOSE
2 - FLUID CONTAINER PARTIALLY FILLED WITH FLUID

STANDARD PROCEDURE - PRESSURE BLEEDING

Use Mopar brake fluid, or an equivalent quality fluid meeting SAE J1703-F and DOT 3 standards only. Use fresh, clean fluid from a sealed container at all times.

Do not pump the brake pedal at any time while bleeding. Air in the system will be compressed into small bubbles that are distributed throughout the hydraulic system. This will make additional bleeding operations necessary.

Do not allow the master cylinder to run out of fluid during bleed operations. An empty cylinder will allow additional air to be drawn into the system. Check the cylinder fluid level frequently and add fluid as needed.

Bleed only one brake component at a time in the following sequence:

Follow the manufacturers instructions carefully when using pressure equipment. Do not exceed the tank manufacturers pressure recommendations. Generally, a tank pressure of 51-67 kPa (15-20 psi) is sufficient for bleeding.

Fill the bleeder tank with recommended fluid and purge air from the tank lines before bleeding.

Do not pressure bleed without a proper master cylinder adapter. The wrong adapter can lead to leakage, or drawing air back into the system. Use adapter provided with the equipment or Adapter 6921.

SPECIFICATIONS

BRAKE COMPONENTS

SPECIFICATIONS

DESCRIPTION	SPECIFICATION
Front Disc Brake Caliper Type	Floating
Front Disc Brake Caliper Piston	48 mm (1.889 in.)
Front Disc Brake Rotor Type	Ventilated
Front Disc Brake Rotor Diameter	305 mm (12 in.)
Front Disc Brake Rotor Max. Runout	0.05 mm (0.002 in.)
Front Disc Brake Rotor Max. Thickness Variation	0.0127 mm (0.0005 in.)
Front Disc Brake Rotor Min. Thickness	24.5 mm (0.9646 in.)
Rear Disc Brake Caliper Type	Floating
Rear Disc Brake Caliper Piston	48 mm (1.889 in.)
Rear Disc Brake Rotor Type Diameter	Solid
Rear Disc Brake Rotor Diameter	305 mm (12 in.)
Rear Disc Brake Rotor Max. Runout	0.76 mm (0.003 in.)
Rear Disc Brake Rotor Max. Thickness Variation	0.0127 mm (0.0005 in.)
Rear Disc Brake Rotor Min. Thickness	8.5 mm (0.335 in.)
Rear Disc Brake Rotor Drum Max. Diameter	196 mm (7.7166 in.)
Brake Booster Type	Dual Diaphragm

SPECIFICATIONS (Continued)

TORQUE CHART

TORQUE SPECIFICATIONS

DESCRIPTION	N·m	Ft. Lbs.	In. Lbs.
Brake Pedal Support Bolt	23-24	17-25	
Brake Pedal Pivot Nut	27-35	20-26	
Brake Booster Mounting Nuts	39	29	
Master Cylinder Mounting Nuts	25	18	
Master Cylinder Primary Brake Line	16		144
Master Cylinder Secondary Brake Line	16		144
Front Caliper Slide Pins	29-41	21-30	
Front Caliper Anchor Bolts	90-115	66-85	
Front Caliper Brake Hose Banjo Bolt	31	23	
Front Caliper Bleed Screw	16		144
Rear Caliper Slide Pins	29-41	21-30	
Rear Caliper Anchor Bolts	90-115	66-85	
Rear Caliper Brake Hose Banjo Bolt	31	23	
Rear Caliper Bleed Screw	16		144

SPECIAL TOOLS

BASE BRAKES

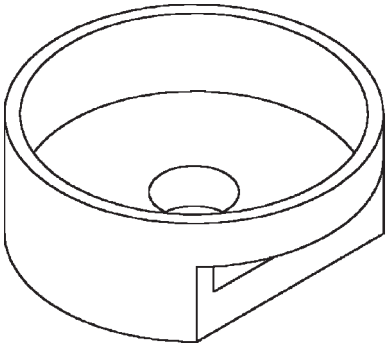

Installer Caliper Dust Boot 8280

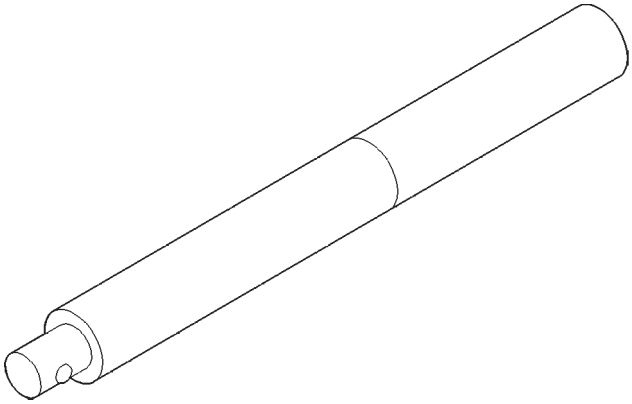

Handle C-4171

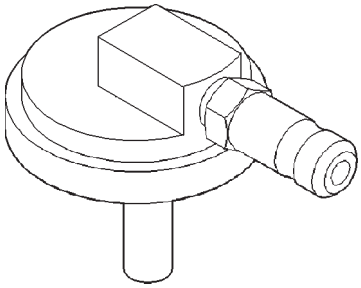

Adapter Pressure Bleeder 6921

BRAKE FLUID LEVEL SWITCH

REMOVAL

(1) Remove the wire connector from the fluid level sensor.

(2) From the same side of the master cylinder reservoir release the sensor locking taps with a small screw driver.

BRAKE FLUID LEVEL SWITCH (Continued)

(3) Pull the sensor out of the reservoir from the connector side of the sensor.

INSTALLATION

(1) Install the sensor with a new o-ring into the reservoir until the locking tabs are engaged.

(2) Install the wire connector to the fluid level sensor.

RED BRAKE WARNING INDICATOR SWITCH

DESCRIPTION

A red warning lamp is used for the service brake portion of the hydraulic system. The lamp is located in the instrument cluster.

OPERATION

The lamp is turned on momentarily when the ignition switch is turn to the on position. This is a self test to verify the lamp is operational.

The red warning light alerts the driver if the fluid level is low or the parking brakes are applied. A red warning lamp with an amber warning lamp may indicate a electronic brake distribution fault.

DIAGNOSIS AND TESTING - RED BRAKE WARNING LAMP

The red warning lamp illuminates when the parking brake is applied or when the fluid level in the master cylinder is low. It will also illuminate at start up as part of a bulb check.

If the light comes on, first verify that the parking brakes are fully released. Then check pedal action and fluid level. If a problem is confirmed, inspect the brake hydraulic system for leaks.

A red warning lamp with a amber warning lamp may indicate a electronic brake distribution fault.

BRAKE LINES

DESCRIPTION

Flexible rubber hose is used at both front brakes, rear brakes and at the rear axle junction block. Double walled steel tubing is used. Double inverted style and ISO style flares are used on the brake lines.

DIAGNOSIS AND TESTING - BRAKE LINE AND HOSES

Flexible rubber hose is used at both front and rear brakes and at the rear axle junction block. Inspect the hoses whenever the brake system is serviced, at every engine oil change, or whenever the vehicle is in for service.

Inspect the hoses for surface cracking, scuffing, or worn spots. Replace any brake hose immediately if the fabric casing of the hose is exposed due to cracks or abrasions.

Also check brake hose installation. Faulty installation can result in kinked, twisted hoses, or contact with the wheels and tires or other chassis components. All of these conditions can lead to scuffing, cracking and eventual failure.

The steel brake lines should be inspected periodically for evidence of corrosion, twists, kinks, leaks, or other damage. Heavily corroded lines will eventually rust through causing leaks. In any case, corroded or damaged brake lines should be replaced.

Factory replacement brake lines and hoses are recommended to ensure quality, correct length and superior fatigue life. Care should be taken to make sure that brake line and hose mating surfaces are clean and free from nicks and burrs. Also remember that right and left brake hoses are not interchangeable.

Use new copper gaskets at all caliper connections. Be sure brake line connections are properly made (not cross threaded) and tightened to recommended torque.

STANDARD PROCEDURE - DOUBLE INVERTED FLARING

A preformed metal brake tube is recommended and preferred for all repairs. However, double-wall steel tube can be used for emergency repair when factory replacement parts are not readily available.

Special bending tools are needed to avoid kinking or twisting of metal brake tubes. Special flaring tools are needed to make a double inverted flare or ISO flare.

(1) Cut off damaged tube with Tubing Cutter.

(2) Ream cut edges of tubing to ensure proper flare.

(3) Install replacement tube nut on the tube.

(4) Insert tube in flaring tool.

(5) Place gauge form over the end of the tube.

(6) Push tubing through flaring tool jaws until tube contacts recessed notch in gauge that matches tube diameter.

(7) Tighten the tool bar on the tube

(8) Insert plug on gauge in the tube. Then swing compression disc over gauge and center tapered flaring screw in recess of compression disc (Fig. 2).

(9) Tighten tool handle until plug gauge is squarely seated on jaws of flaring tool. This will start the inverted flare.

(10) Remove the plug gauge and complete the inverted flare.

BRAKE LINES (Continued)

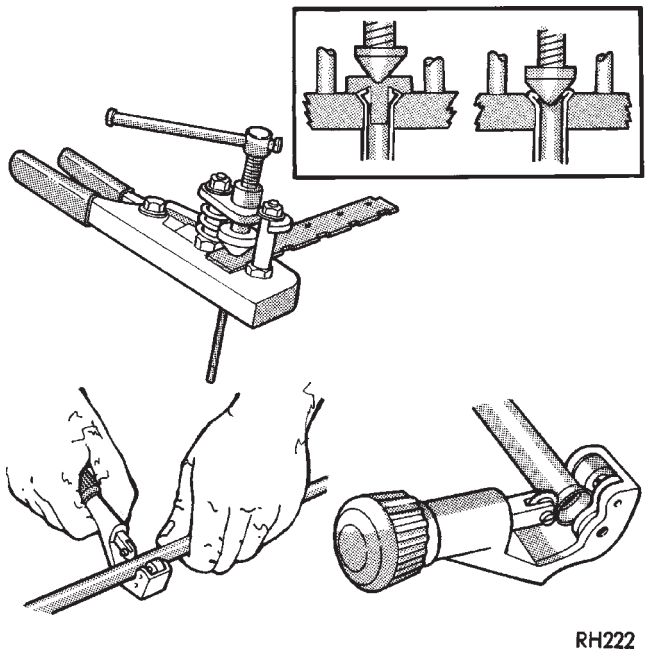

Fig. 2 Inverted

STANDARD PROCEDURE - ISO FLARING

A preformed metal brake tube is recommended and preferred for all repairs. However, double-wall steel tube can be used for emergency repair when factory replacement parts are not readily available.

Special bending tools are needed to avoid kinking or twisting of metal brake tubes. Special flaring tools are needed to make a double inverted flare or ISO flare.

To make a ISO flare use Snap-On® Flaring Tool TFM-428 or equivalent.

(1) Cut off damaged tube with Tubing Cutter.

(2) Remove any burrs from the inside of the tube.

(3) Install tube nut on the tube.

(4) Position the tube in the flaring tool flush with the top of the tool bar (Fig. 3). Then tighten the tool bar on the tube.

(5) Install the correct size adaptor on the flaring tool yoke screw.

(6) Lubricate the adaptor.

(7) Align the adaptor and yoke screw over the tube (Fig. 3).

(8) Turn the yoke screw in until the adaptor is squarely seated on the tool bar.

BRAKE PADS / SHOES

DESCRIPTION - FRONT DISC BRAKE SHOES

The calipers are twin piston type. The calipers are free to slide laterally on the anchor, this allows continuous compensation for lining wear.

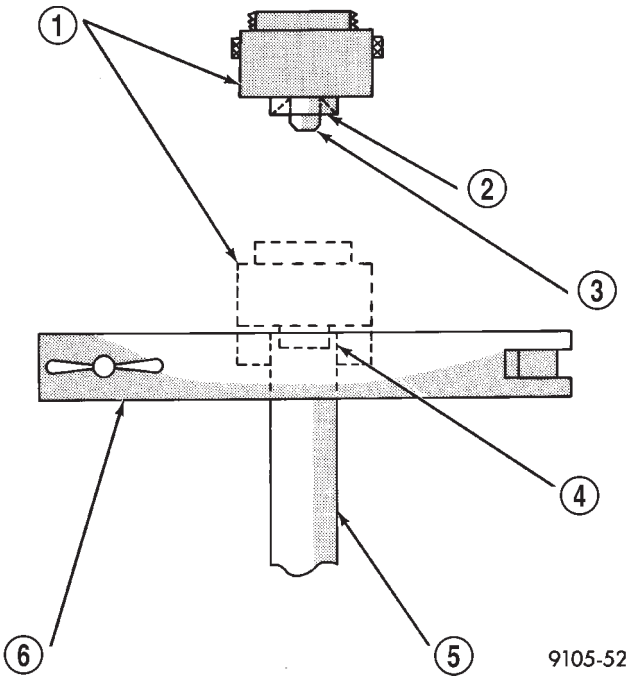

Fig. 3 ISO Flaring

1 - ADAPTER
2 - LUBRICATE HERE
3 - PILOT
4 - FLUSH WITH BAR
5 - TUBING
6 - BAR ASSEMBLY

DESCRIPTION - REAR DISC BRAKE SHOES

The rear disc brakes consist of single piston floating-type calipers and solid rotors. The rear caliper is mounted on an anchor attached to an adapter attached the rear axle tube flange. The anchors are secured to the adapters with mounting bolts. The disc brake rotor splash shield is part of the adaptor. The disc brake rotor has a built in brake drum used for the parking brakes (Fig. 4). The parking brake shoes are mounted to the adaptor.

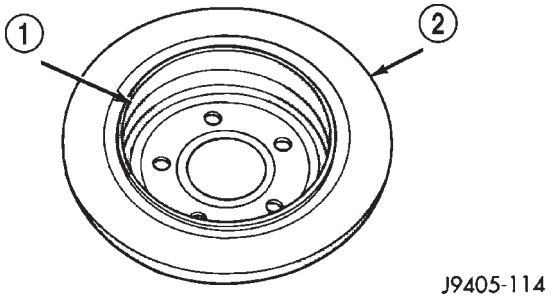

Fig. 4 Rear Disc Brake Rotor

1 - PARKING BRAKE DRUM SURFACE
2 - REAR DISC BRAKE ROTOR

BRAKE PADS / SHOES (Continued)

OPERATION - FRONT DISC BRAKE SHOES

When the brakes are applied fluid pressure is exerted against the caliper pistons. The fluid pressure is exerted equally and in all directions. This means pressure exerted against the caliper pistons and within the caliper bores will be equal (Fig. 5).

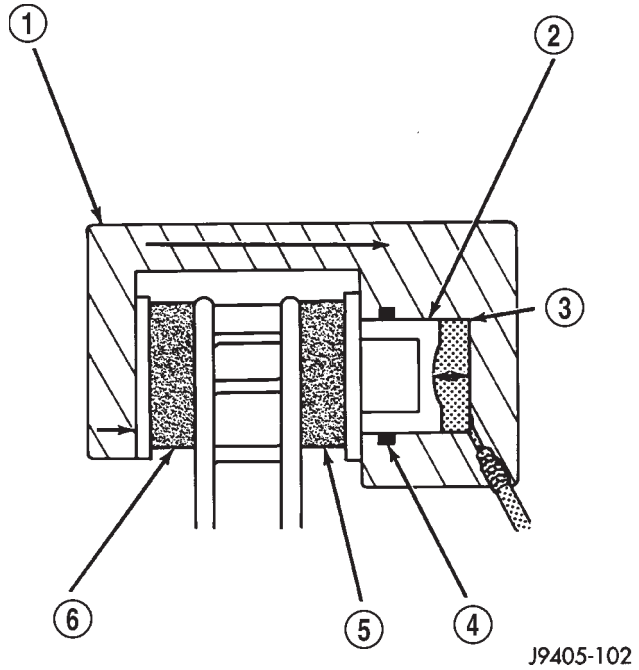

Fig. 5 Brake Caliper Operation

1 - CALIPER
2 - PISTON
3 - PISTON BORE
4 - SEAL
5 - INBOARD SHOE
6 - OUTBOARD SHOE

Fluid pressure applied to the pistons is transmitted directly to the inboard brake shoe. This forces the shoe lining against the inner surface of the disc brake rotor. At the same time, fluid pressure within the piston bores forces the caliper to slide inward on the slide pins. This action brings the outboard brake shoe lining into contact with the outer surface of the disc brake rotor.

Fluid pressure acting simultaneously on the pistons and caliper to produces a strong clamping action. When sufficient force is applied, friction will stop the rotors from turning and bring the vehicle to a stop.

Application and release of the brake pedal generates only a very slight movement of the caliper and pistons. Upon release of the pedal, the caliper and pistons return to a rest position. The brake shoes do not retract an appreciable distance from the rotor. In fact, clearance is usually at, or close to zero. The reasons for this are to keep road debris from getting between the rotor and lining and in wiping the rotor surface clear each revolution.

The caliper piston seals control the amount of piston extension needed to compensate for normal lining wear.

During brake application, the seals are deflected outward by fluid pressure and piston movement (Fig. 6). When the brakes (and fluid pressure) are released, the seals relax and retract the pistons.

The front outboard brake shoes have wear indicators.

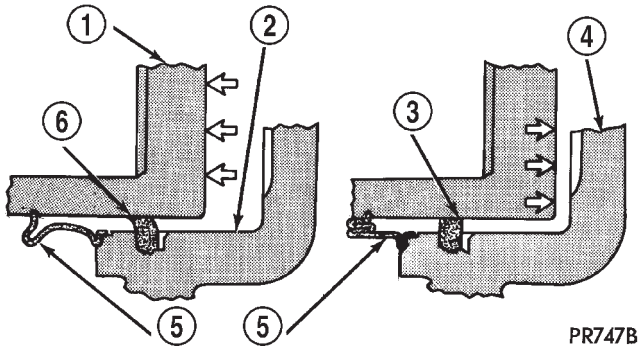

Fig. 6 Lining Wear Compensation By Piston Seal

1 - PISTON
2 - CYLINDER BORE
3 - PISTON SEAL BRAKE PRESSURE OFF
4 - CALIPER HOUSING
5 - DUST BOOT
6 - PISTON SEAL BRAKE PRESSURE ON

OPERATION - REAR DISC BRAKE SHOES

When the brakes are applied fluid pressure is exerted against the caliper pistons. The fluid pressure is exerted equally and in all directions. This means pressure exerted against the caliper pistons and within the caliper bores will be equal (Fig. 5).

Fluid pressure applied to the pistons is transmitted directly to the inboard brake shoe. This forces the shoe lining against the inner surface of the disc brake rotor. At the same time, fluid pressure within the piston bores forces the caliper to slide inward on the slide pins. This action brings the outboard brake shoe lining into contact with the outer surface of the disc brake rotor.

Fluid pressure acting simultaneously on the pistons and caliper to produces a strong clamping action. When sufficient force is applied, friction will stop the rotors from turning and bring the vehicle to a stop.

Application and release of the brake pedal generates only a very slight movement of the caliper and pistons. Upon release of the pedal, the caliper and pistons return to a rest position. The brake shoes do not retract an appreciable distance from the rotor. In

BRAKE PADS / SHOES (Continued)

fact, clearance is usually at, or close to zero. The reasons for this are to keep road debris from getting between the rotor and lining and in wiping the rotor surface clear each revolution.

The caliper piston seals control the amount of piston extension needed to compensate for normal lining wear.

During brake application, the seals are deflected outward by fluid pressure and piston movement (Fig. 6). When the brakes (and fluid pressure) are released, the seals relax and retract the pistons.

The front outboard brake shoes have wear indicators.

REMOVAL- FRONT DISC BRAKE SHOES

(1) Raise and support vehicle.

(2) Remove wheel and tire assembly.

(3) Drain small amount of fluid from master cylinder brake reservoir with **clean** suction gun.

(4) Bottom caliper pistons into the caliper by prying the caliper over (Fig. 7).

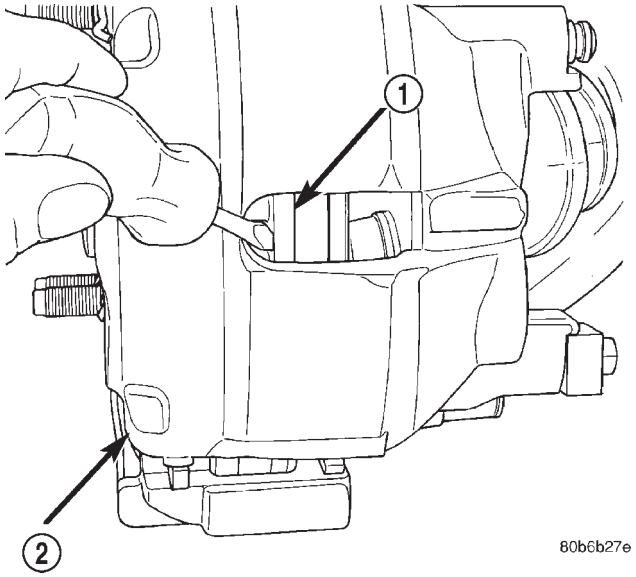

Fig. 7 Bottoming Caliper Piston

1 - ROTOR
2 - CALIPER

(5) Remove the caliper support spring by prying the spring out of the caliper (Fig. 8).

(6) Remove the caliper slide pin bushing caps and remove the slide pins (Fig. 9).

(7) Remove caliper from the anchor.

(8) Secure caliper to nearby suspension part with wire. **Do not allow brake hose to support caliper weight.**

(9) Remove the inboard brake shoe from the caliper (Fig. 10).

(10) Remove the outboard brake shoe (Fig. 11) from the caliper anchor.

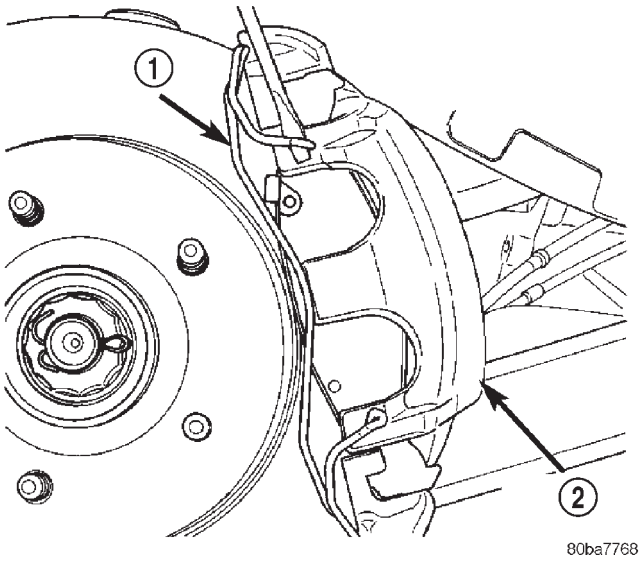

Fig. 8 Caliper Support Spring

1 - SUPPORT SPRING
2 - CALIPER

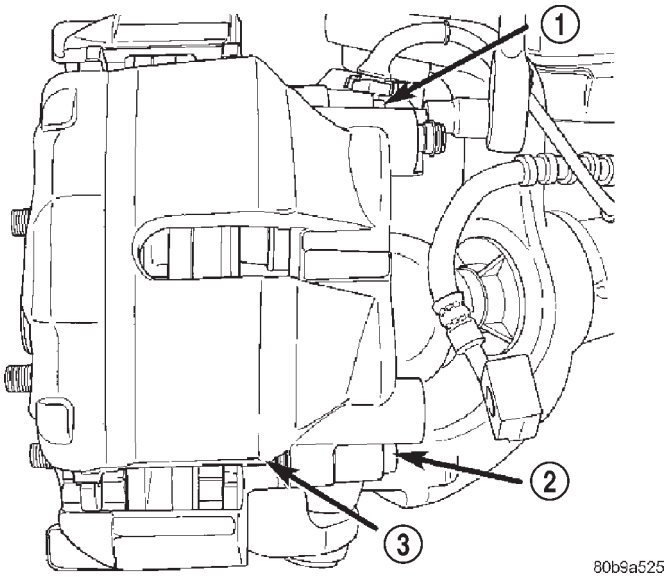

Fig. 9 Caliper Slide

1 - SLIDE PIN
2 - SLIDE PIN
3 - CALIPER

REMOVAL - REAR DISC BRAKE SHOES

(1) Raise and support vehicle.

(2) Remove rear wheel and tire assembly.

(3) Drain small amount of fluid from master cylinder brake reservoir with a **clean** suction gun.

(4) Bottom caliper pistons into the caliper by prying the caliper over (Fig. 12).

(5) Remove the caliper support spring by prying the spring out of the caliper (Fig. 13).

BRAKE PADS / SHOES (Continued)

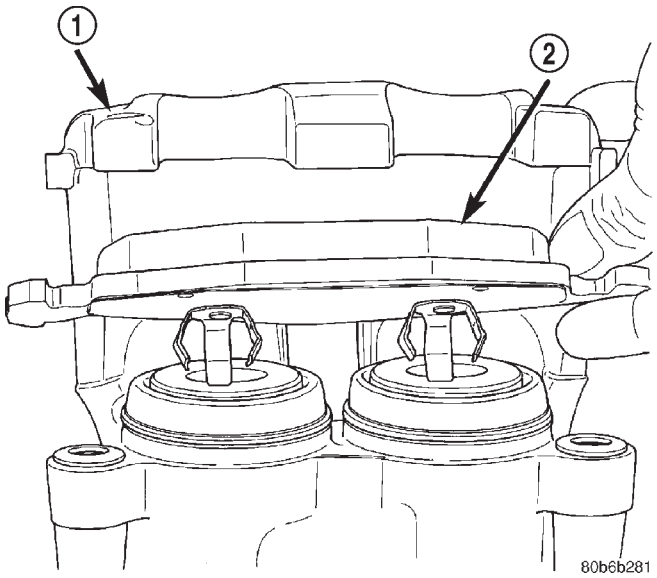

Fig. 10 Inboard Brake Shoe

1 - CALIPER
2 - INBOARD SHOE

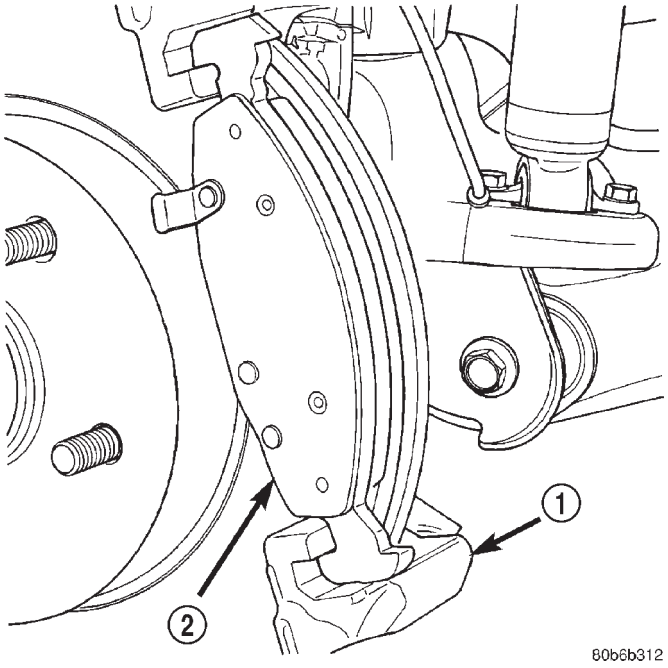

Fig. 11 Outboard Brake Shoe

1 - CALIPER ANCHOR
2 - OUTBOARD BRAKE SHOE

(6) Remove the caliper slide pin bushing caps and remove the slide pins (Fig. 14).

(7) Remove caliper from the anchor.

(8) Secure caliper to nearby suspension part with wire. **Do not allow brake hose to support caliper weight.**

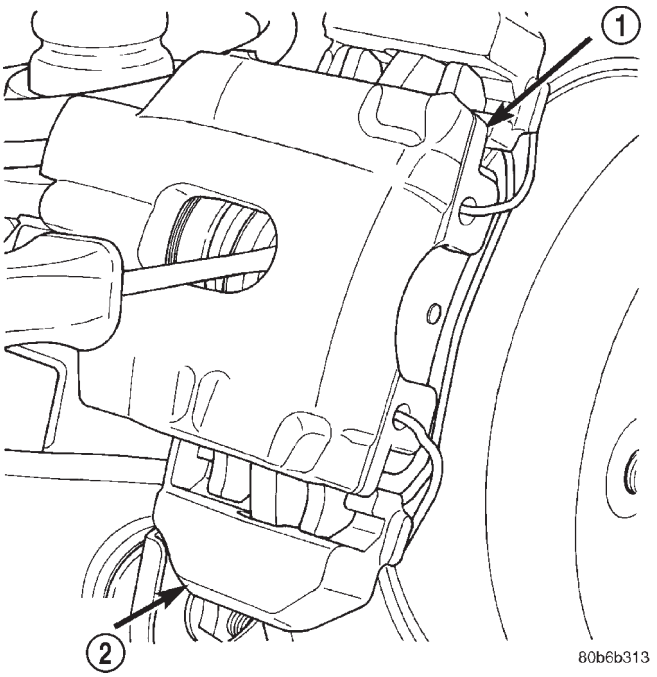

Fig. 12 Bottoming Caliper Piston

1 - CALIPER
2 - CALIPER ANCHOR

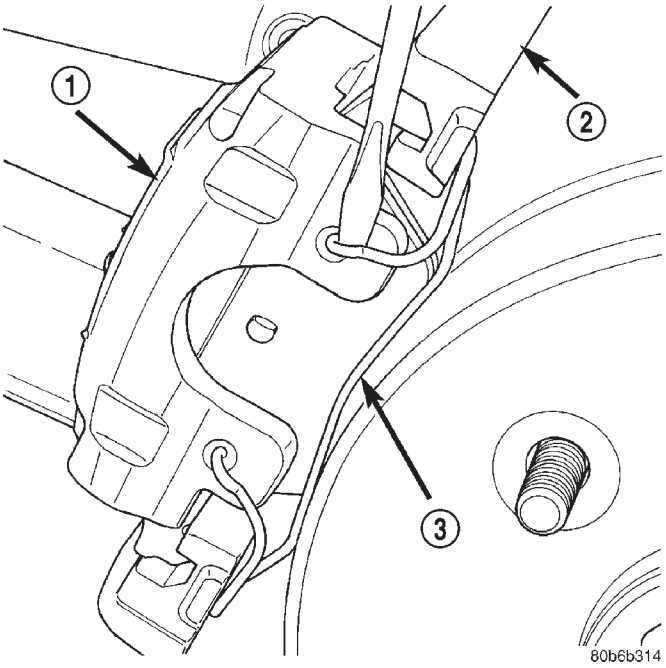

Fig. 13 Caliper Support Spring

1 - CALIPER
2 - ANCHOR
3 - SUPPORT SPRING

(9) Remove the inboard brake shoe from the caliper (Fig. 15).

BRAKE PADS / SHOES (Continued)

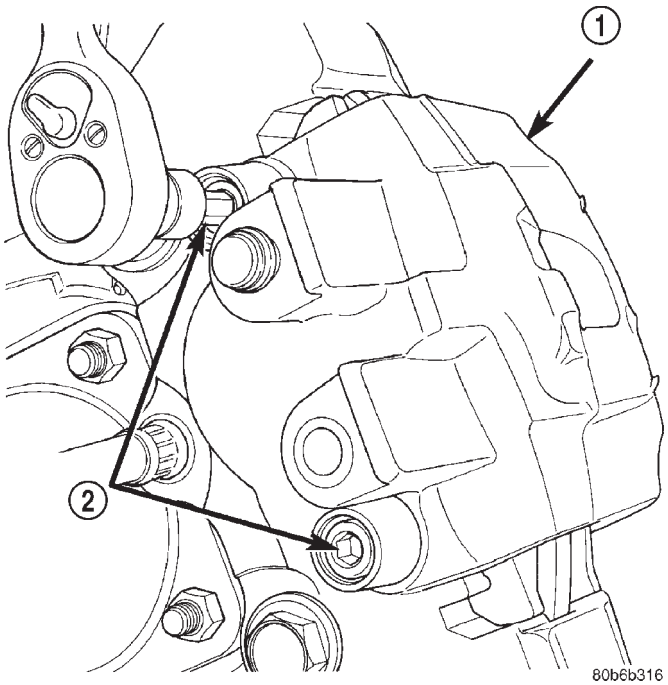

Fig. 14 Caliper Slide Pins

1 - CALIPER
2 - SLIDE PINS

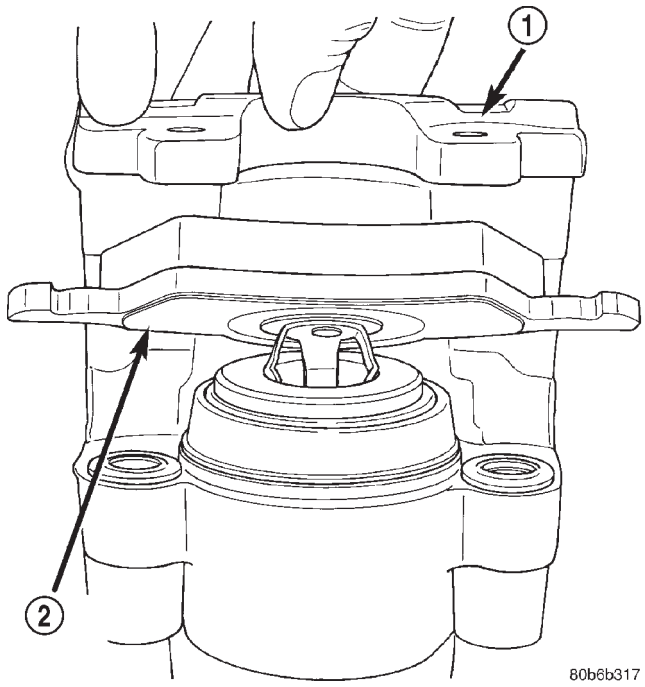

Fig. 15 Inboard Brake Shoe

1 - CALIPER
2 - INBOARD SHOE

(10) Remove outboard brake shoe (Fig. 16) from the caliper anchor.

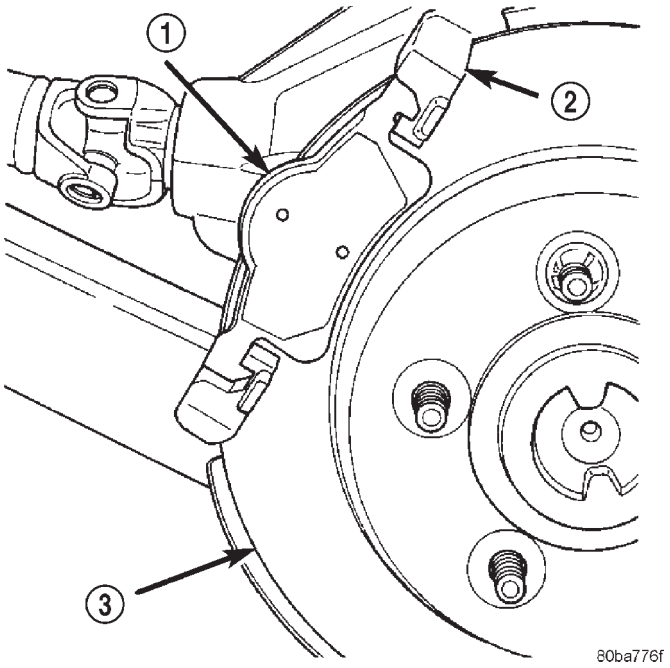

Fig. 16 Outboard Brake Shoe

1 - OUTBOARD BRAKE SHOE
2 - CALIPER ANCHOR
3 - ROTOR

INSTALLATION - FRONT DISC BRAKE SHOES

(1) Install the inboard brake shoe onto the caliper (Fig. 10).

(2) Install the outboard shoe onto the caliper anchor (Fig. 11).

(3) Lubricate the slide pins and slide pin bushings with Dow Corning® grease G807 or the grease provided with the brake shoes.

(4) Install caliper on the caliper anchor.

(5) Install the caliper slide pin and tighten to 29-41 N·m (21-30 ft. lbs.).

(6) Install the caliper slide pin bushing caps.

(7) Install the caliper support spring in the top end of the caliper and under the anchor. Then install other end into the lower caliper hole. Hold the spring into the caliper hole with your thumb while prying the end of the spring out and down under the anchor with a screw drive.

(8) Install wheel and tire assembly.

(9) Remove support and lower vehicle.

(10) Pump brake pedal until caliper pistons and brake shoes are seated and a firm brake pedal is obtained.

(11) Fill brake fluid.

INSTALLATION - REAR DISC BRAKE SHOES

(1) Install the inboard brake shoe onto the caliper (Fig. 15).

BRAKE PADS / SHOES (Continued)

(2) Install the outboard brake shoe onto the caliper anchor (Fig. 16).

(3) Lubricate the slide pins and slide pin bushings with Dow Corning® grease G807 or the grease provided with the brake shoes.

(4) Install caliper on the anchor.

(5) Install the caliper slide pin and tighten to 29-41 N·m (21-30 ft. lbs.).

(6) Install the caliper slide pin bushing caps.

(7) Install the caliper support spring in the top end of the caliper and under the anchor. Then install other end into the lower caliper hole. Hold the spring into the caliper hole with your thumb while prying the end of the spring out and down under the anchor with a screw drive.

(8) Install wheel and tire assembly.

(9) Remove support and lower vehicle.

(10) Pump brake pedal until caliper piston and brake shoes are seated and a firm brake pedal is obtained.

(11) Fill brake fluid level if necessary.

DISC BRAKE CALIPERS

REMOVAL - FRONT DISC BRAKE CALIPER

(1) Raise and support vehicle.

(2) Remove front wheel and tire assembly.

(3) Drain small amount of fluid from master cylinder brake reservoir with **clean** suction gun.

(4) Bottom caliper pistons into the caliper by prying the caliper over (Fig. 17).

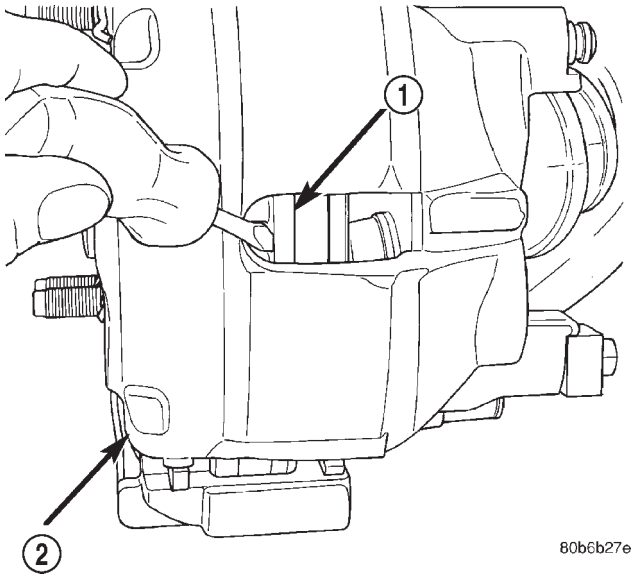

Fig. 17 Bottoming Caliper Piston

1 - ROTOR
2 - CALIPER

(5) Remove brake hose banjo bolt and gasket washers. Discard gasket washers.

(6) Remove the caliper support spring by prying the spring out of the caliper (Fig. 18).

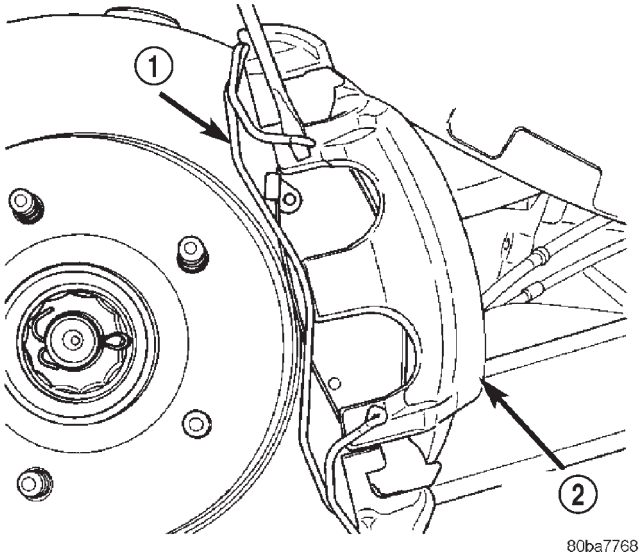

Fig. 18 Caliper Support Spring

1 - SUPPORT SPRING
2 - CALIPER

(7) Remove the caliper slide pin bushing caps and remove the slide pins (Fig. 19).

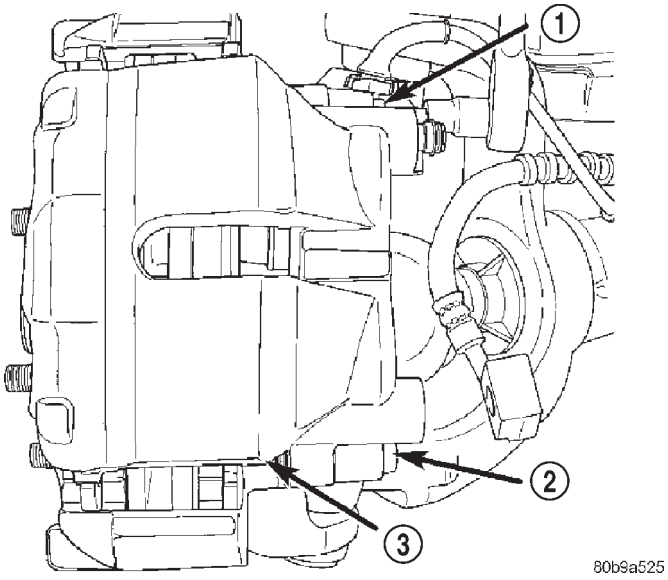

Fig. 19 Slide Pins

1 - SLIDE PIN
2 - SLIDE PIN
3 - CALIPER

(8) Remove caliper from the anchor.

(9) Remove the inboard brake shoe (Fig. 20).

DISC BRAKE CALIPERS (Continued)

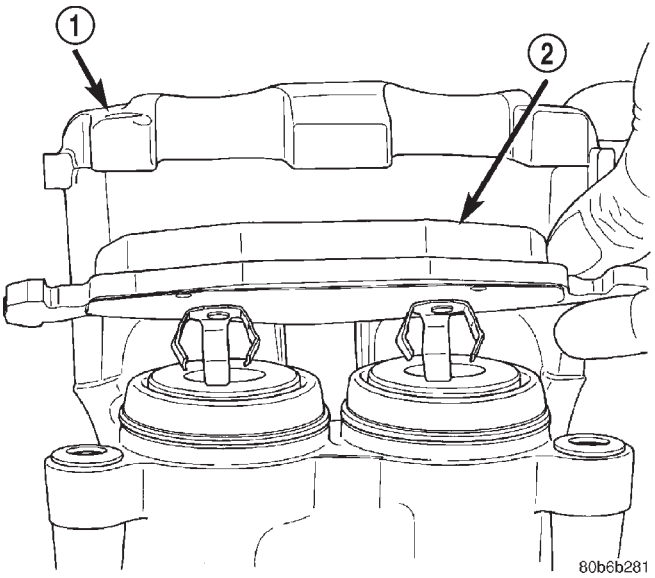

Fig. 20 Inboard Brake Shoe

1 - CALIPER
2 - INBOARD SHOE

REMOVAL - REAR DISC BRAKE CALIPER

(1) Raise and support vehicle.
(2) Remove rear wheel and tire assembly.
(3) Drain small amount of fluid from master cylinder brake reservoir with a **clean** suction gun.
(4) Bottom caliper pistons into the caliper by prying the caliper over (Fig. 21).
(5) Remove brake hose banjo bolt and discard gasket washers.
(6) Remove the caliper support spring by prying the spring out of the caliper (Fig. 22).
(7) Remove the caliper slide pin bushing caps and remove the slide pins (Fig. 23).
(8) Remove caliper from the anchor.
(9) Remove the inboard brake shoe (Fig. 24).

DISASSEMBLY - FRONT DISC BRAKE CALIPER

(1) Drain the brake fluid from caliper.
(2) C-clamp a block of wood over one piston (Fig. 25).
(3) Take another piece of wood and pad it with one-inch thickness of shop towels. Place this piece in the outboard shoe side of the caliper in front of the other piston. This will cushion and protect caliper piston during removal (Fig. 26).
(4) To remove the caliper piston direct **short bursts of low pressure air** with a blow gun through the caliper brake hose port. Use only enough air pressure to ease the piston out.

CAUTION: Do not blow the piston out of the bore with sustained air pressure. This could result in a cracked piston.

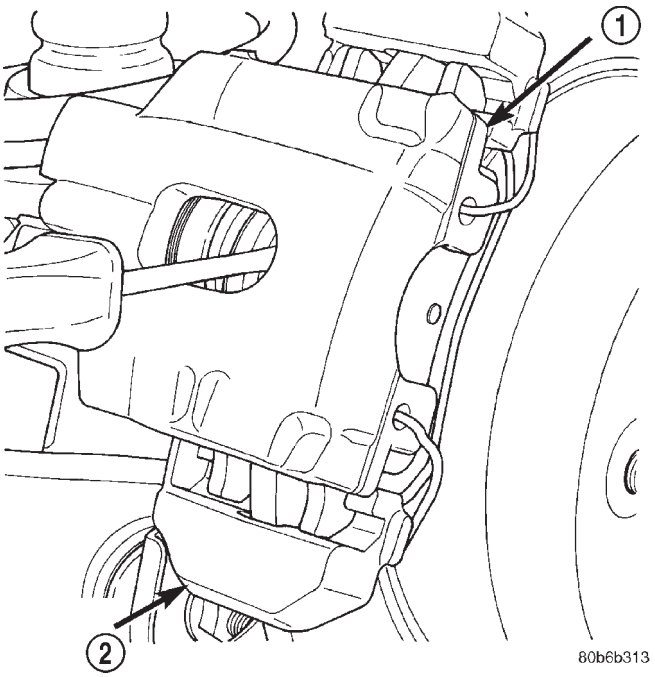

Fig. 21 Bottoming Caliper Piston

1 - CALIPER
2 - CALIPER ANCHOR

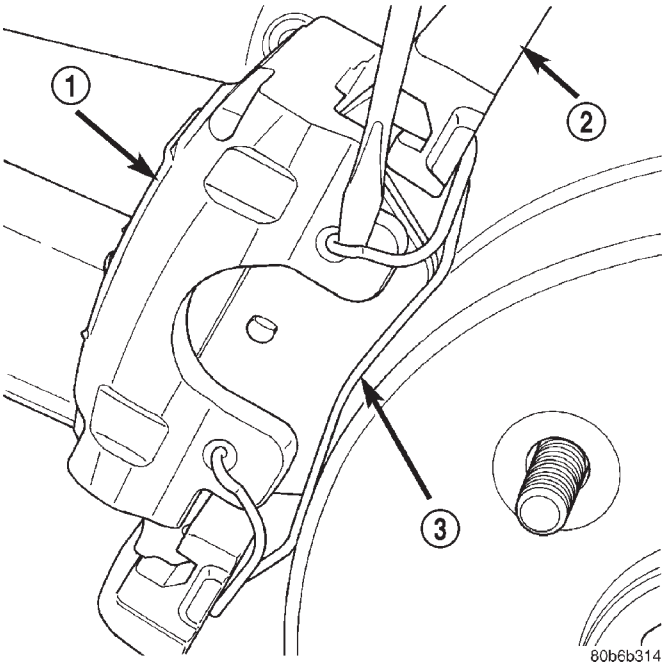

Fig. 22 Caliper Support Spring

1 - CALIPER
2 - ANCHOR
3 - SUPPORT SPRING

WARNING: NEVER ATTEMPT TO CATCH THE PISTON AS IT LEAVES THE BORE. THIS COULD RESULT IN PERSONAL INJURY.

DISC BRAKE CALIPERS (Continued)

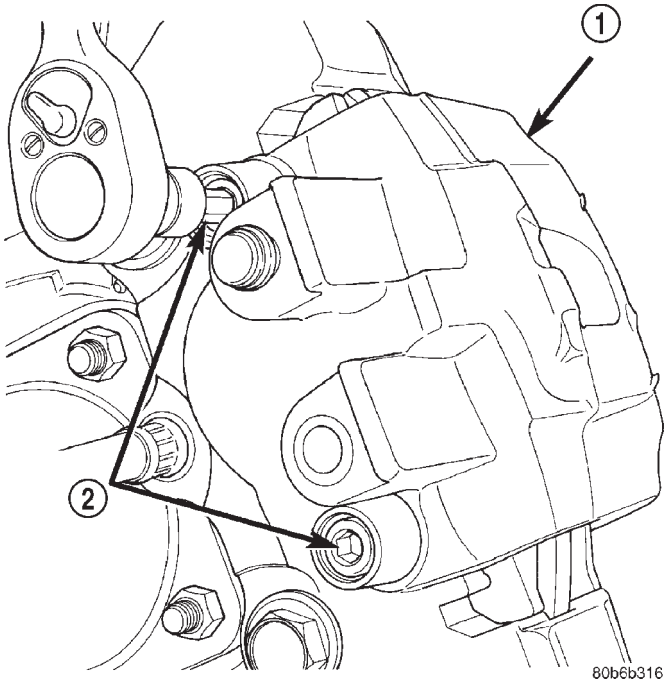

Fig. 23 Caliper Slide Pins

1 - CALIPER
2 - SLIDE PINS

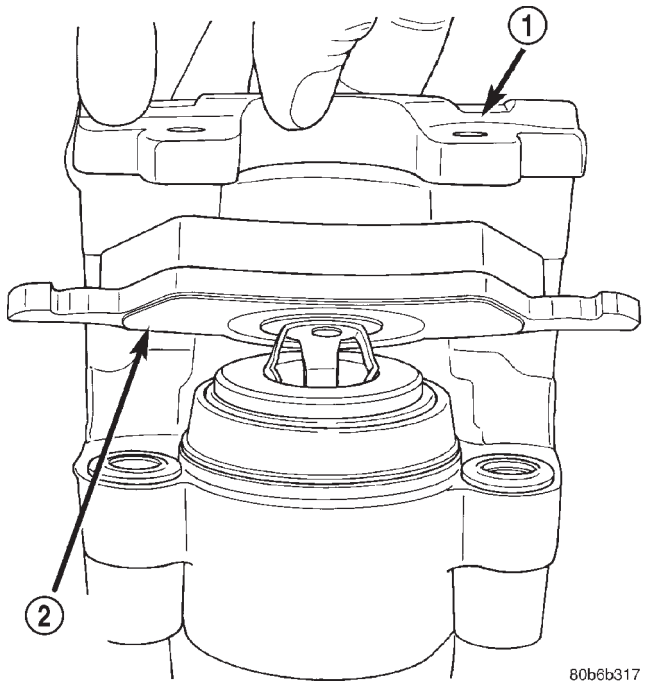

Fig. 24 Inboard Brake Shoe

1 - CALIPER
2 - INBOARD SHOE

(5) Remove the C-clamp and block of wood from the caliper and clamp it over the dust boot of the first piston removed. This will seal the empty piston bore.

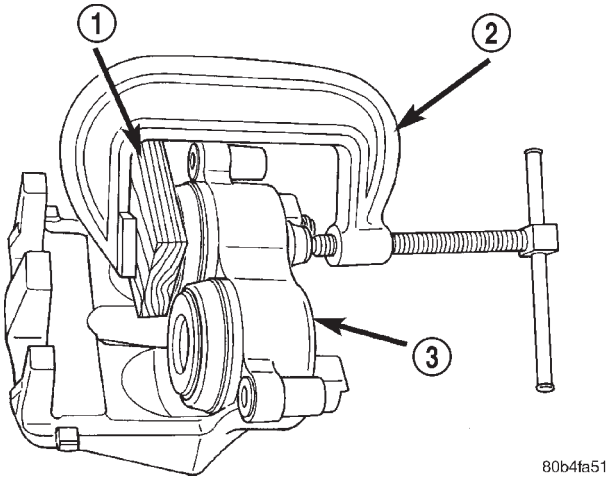

Fig. 25 C-Clamp One Piston

1 - BLOCK OF WOOD
2 - C-CLAMP
3 - CALIPER

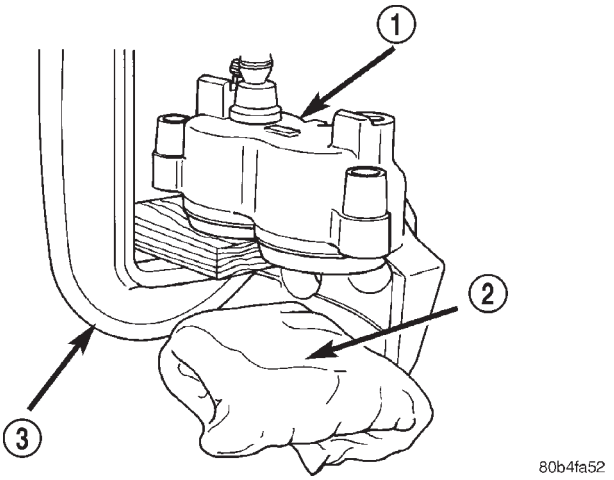

Fig. 26 Protect Caliper Piston

1 - CALIPER
2 - PADDED BLOCK OF WOOD
3 - C-CLAMP

(6) Move the padded piece of wood in front of the other piston.

(7) Remove the second piston using the same procedure with **short bursts of low pressure air**.

(8) Remove piston dust boots with a suitable pry tool (Fig. 27)and discard.

(9) Remove piston seals from caliper (Fig. 28)and discard.

CAUTION: Do not scratch piston bore while removing the seals.

DISC BRAKE CALIPERS (Continued)

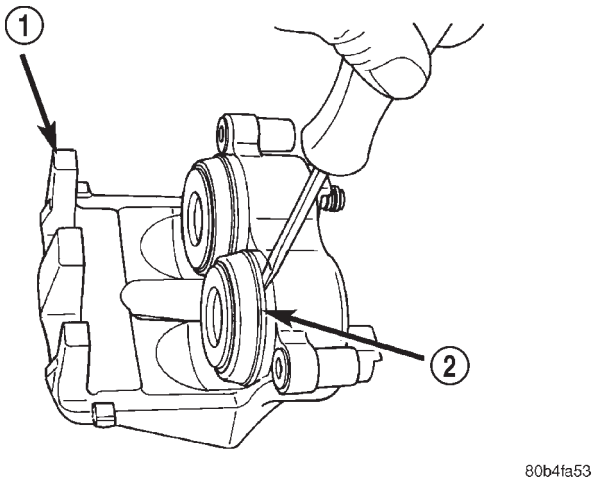

Fig. 27 Piston Dust Boot Removal

1 - CALIPER
2 - PISTON DUST BOOT

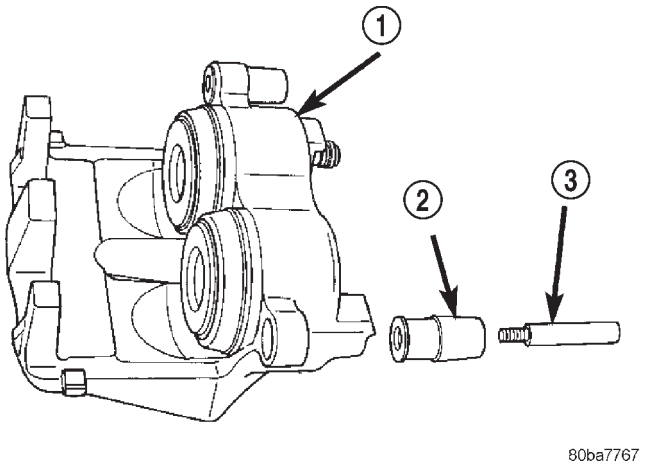

Fig. 29 Caliper Slide Pin Bushings

1 - CALIPER
2 - BUSHING
3 - CALIPER SLIDE PIN

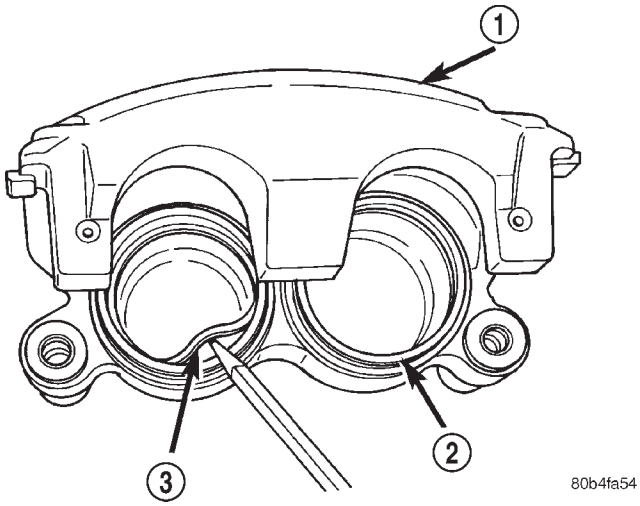

Fig. 28 Piston Seal

1 - CALIPER
2 - PISTON BORE
3 - PISTON SEAL

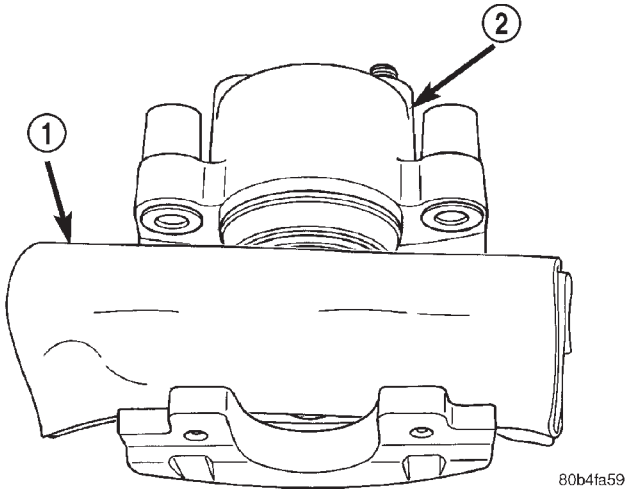

Fig. 30 Padding Caliper Interior

1 - SHOP TOWELS OR CLOTHS
2 - CALIPER

(10) Remove caliper slide pin bushings (Fig. 29).
(11) Remove caliper bleed screw.

DISASSEMBLY - REAR DISC BRAKE CALIPER

(1) Drain brake fluid out of caliper.

(2) Take a piece of wood and pad it with one-inch thickness of shop towels. Place this piece in the outboard shoe side of the caliper in front of the piston. This will cushion and protect caliper piston during removal (Fig. 30).

(3) To remove caliper piston direct **short bursts of low pressure air** with a blow gun through the caliper brake hose port (Fig. 31). Use only enough air pressure to ease the piston out.

CAUTION: Do not blow the piston out of the bore with sustained air pressure. This could result in a cracked piston.

WARNING: NEVER ATTEMPT TO CATCH THE PISTON AS IT LEAVES THE BORE. THIS MAY RESULT IN PERSONAL INJURY.

(4) Remove caliper piston dust boot with a suitable pry tool (Fig. 32) and discard.

(5) Remove piston seal from the caliper (Fig. 33)and discard.

CAUTION: Do not scratch the piston bore while removing the seal.

DISC BRAKE CALIPERS (Continued)

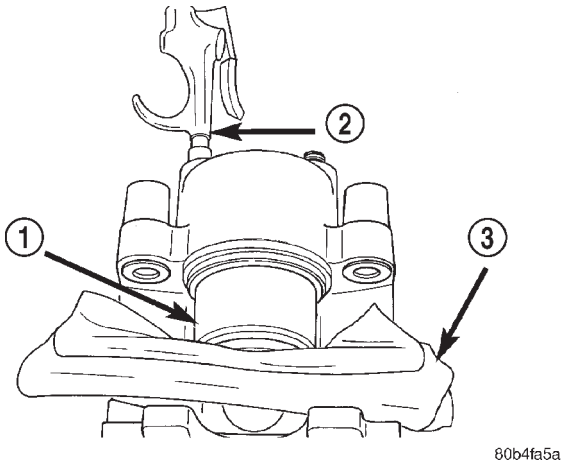

Fig. 31 Caliper Piston Removal

1 - CALIPER PISTON
2 - AIR GUN
3 - PADDING MATERIAL

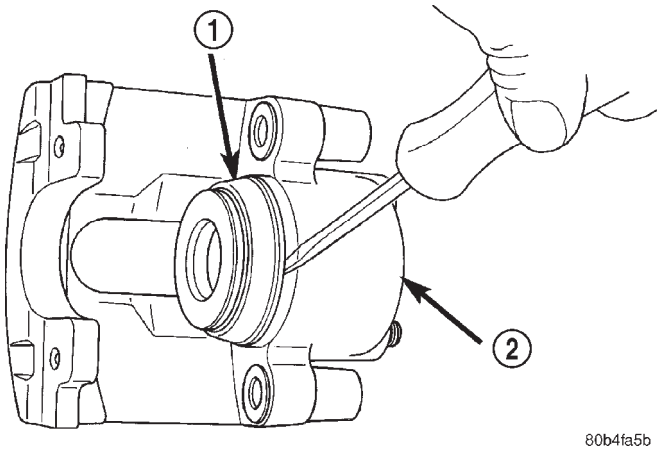

Fig. 32 Caliper Piston Dust

1 - PISTON DUST BOOT
2 - CALIPER

(6) Remove caliper slide pin bushings (Fig. 34).
(7) Remove caliper bleed screw.

CLEANING - DISC BRAKE CALIPER

Clean the caliper components with clean brake fluid or brake clean only. Wipe the caliper and piston dry with lint free towels or use low pressure compressed air.

CAUTION: Do not use gasoline, kerosene, paint thinner, or similar solvents. These products may leave a residue that could damage the piston and seal.

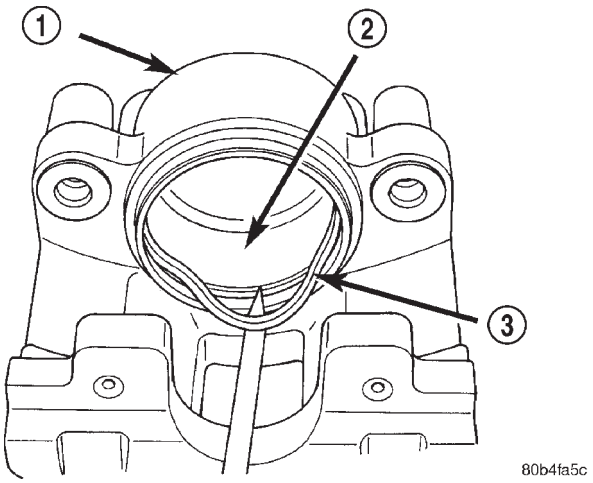

Fig. 33 Piston Seal Removal

1 - CALIPER
2 - PISTON BORE
3 - PISTON SEAL

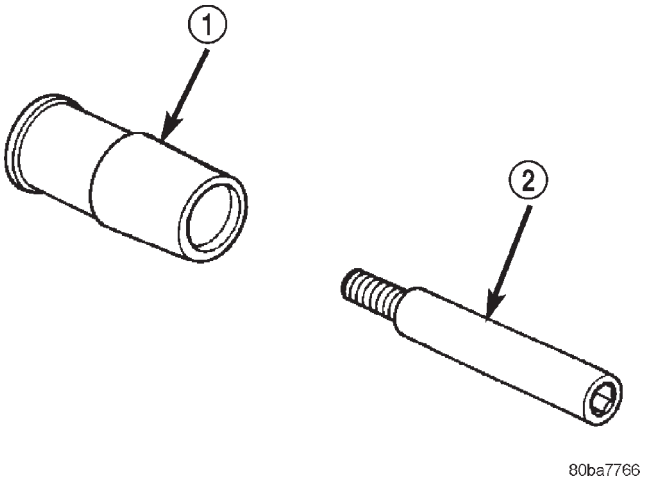

Fig. 34 Slide Pin And Bushing

1 - BUSHING
2 - CALIPER SLIDE PIN

INSPECTION - DISC BRAKE CALIPER

The piston is made from a phenolic resin (plastic material) and should be smooth and clean.

The piston must be replaced if cracked or scored. Do not attempt to restore a scored piston surface by sanding or polishing.

CAUTION: If the caliper piston is replaced, install the same type of piston in the caliper. Never interchange phenolic resin and steel caliper pistons. The pistons, seals, seal grooves, caliper bore and piston tolerances are different.

DISC BRAKE CALIPERS (Continued)

The bore can be **lightly** polished with a brake hone to remove very minor surface imperfections (Fig. 35). The caliper should be replaced if the bore is severely corroded, rusted, scored, or if polishing would increase bore diameter more than 0.025 mm (0.001 inch).

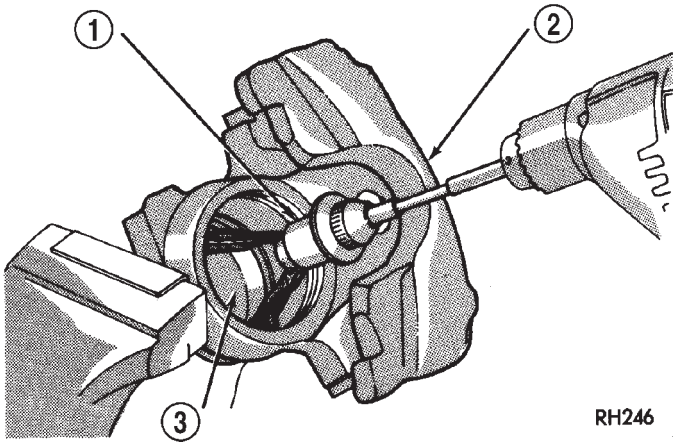

Fig. 35 Polishing Piston Bore

1 - SPECIAL HONE
2 - CALIPER
3 - PISTON BORE

ASSEMBLY - FRONT DISC BRAKE CALIPER

CAUTION: Dirt, oil, and solvents can damage caliper seals. Insure assembly area is clean and dry.

(1) Lubricate caliper pistons, piston seals and piston bores with clean brake fluid.
(2) Install new piston seals into seal groove with finger (Fig. 36).

NOTE: Verify seal is fully seated and not twisted.

(3) Install new dust boot on caliper piston and seat boot lip into piston groove (Fig. 37).
(4) Stretch boot rearward to straighten boot folds, then move boot forward until folds snap into place.
(5) Install piston into caliper bore and press piston down to the bottom of the caliper bore by hand or with hammer handle (Fig. 38).
(6) Seat dust boot in caliper (Fig. 39) with Installer 8280 and Handle C-4171.
(7) Install the second piston and dust boot.
(8) Install caliper slide pin bushings into the caliper.
(9) Install caliper bleed screw.

ASSEMBLY - REAR DISC BRAKE CALIPER

CAUTION: Dirt, oil, and solvents can damage caliper seals. Insure assembly area is clean and dry.

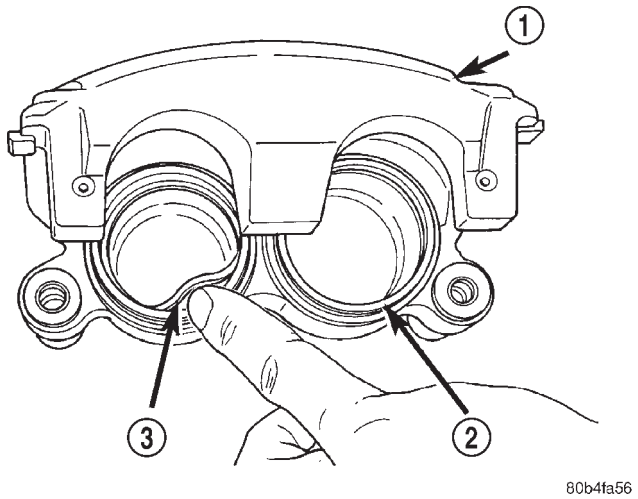

Fig. 36 Piston Seal

1 - CALIPER
2 - PISTON BORE
3 - PISTON SEAL

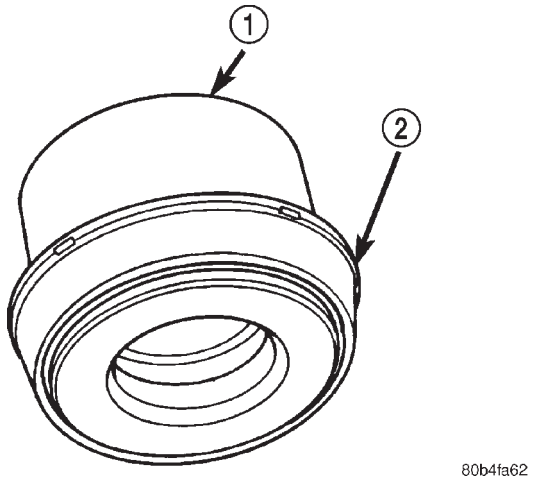

Fig. 37 Dust Boot On Piston

1 - PISTON
2 - DUST BOOT

(1) Lubricate caliper piston, piston seal and piston bore with clean brake fluid.
(2) Install new piston seal into seal groove with finger (Fig. 40).

NOTE: Verify seal is fully seated and not twisted.

(3) Install new dust boot on caliper piston and seat boot lip into piston groove (Fig. 41).
(4) Stretch boot rearward to straighten boot folds, then move boot forward until folds snap into place.
(5) Install piston into caliper bore and press piston down to the bottom of the caliper bore by hand or with hammer handle (Fig. 42).

DISC BRAKE CALIPERS (Continued)

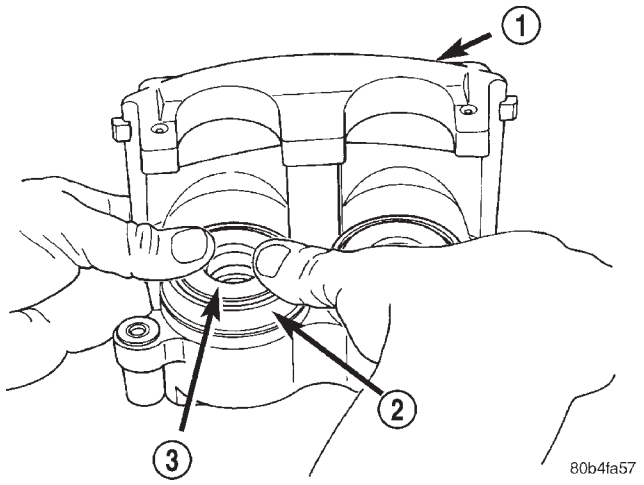

Fig. 38 Caliper Piston Installation

1 - CALIPER
2 - DUST BOOT
3 - PISTON

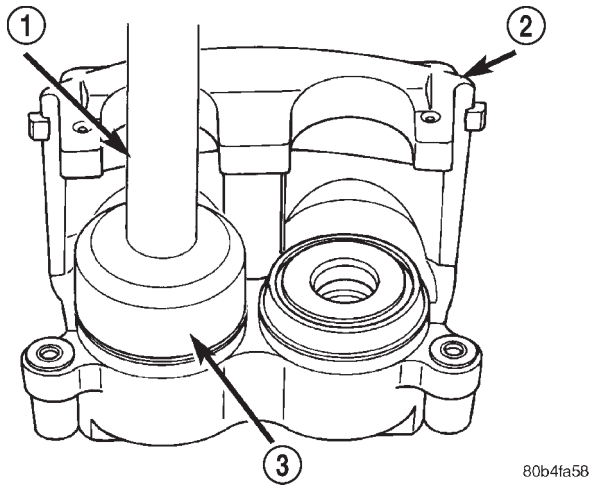

Fig. 39 Seating Dust Boot

1 - HANDLE
2 - CALIPER
3 - DUST BOOT INSTALLER

(6) Seat dust boot in caliper with Installer 8280 and Handle C-4171 (Fig. 43).

(7) Install caliper slide pin bushings into the caliper (Fig. 44).

(8) Install caliper bleed screw.

INSTALLATION - FRONT DISC BRAKE CALIPER

(1) Install the inboard brake shoe (Fig. 20).

(2) Lubricate the slide pins and slide pin bushings with Dow Corning® grease G807 or the grease provided with the caliper.

(3) Install the caliper on the anchor.

(4) Install the caliper slide pin and tighten to 29-41 N·m (21-30 ft. lbs.).

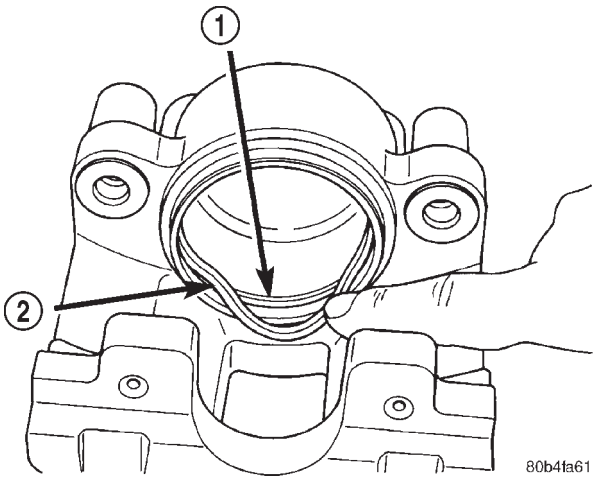

Fig. 40 Piston Seal Installation

1 - SEAL GROOVE
2 - PISTON SEAL

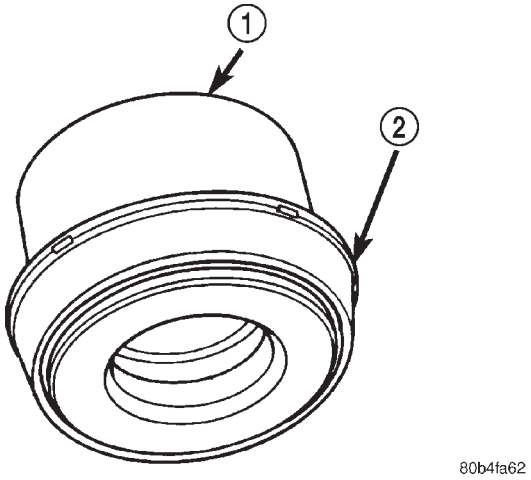

Fig. 41 Dust Boot On Piston

1 - PISTON
2 - DUST BOOT

(5) Install the caliper slide pin bushing caps.

(6) Install the caliper support spring in the top end of the caliper and under the anchor. Then install other end into the lower caliper hole. Hold the spring into the caliper hole with your thumb while prying the end of the spring out and down under the anchor with a screw drive.

(7) Install brake hose to caliper with **new gasket washers** and tighten banjo bolt to 31 N·m (23 ft. lbs.).

CAUTION: Verify brake hose is not twisted or kinked before tightening banjo bolt.

(8) Fill and bleed brake system.

(9) Install wheel and tire assemblies.

DISC BRAKE CALIPERS (Continued)

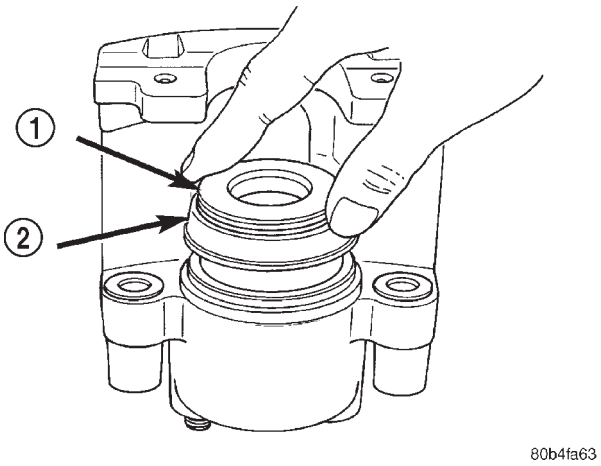

Fig. 42 Caliper Piston Installation

1 - PISTON
2 - BOOT

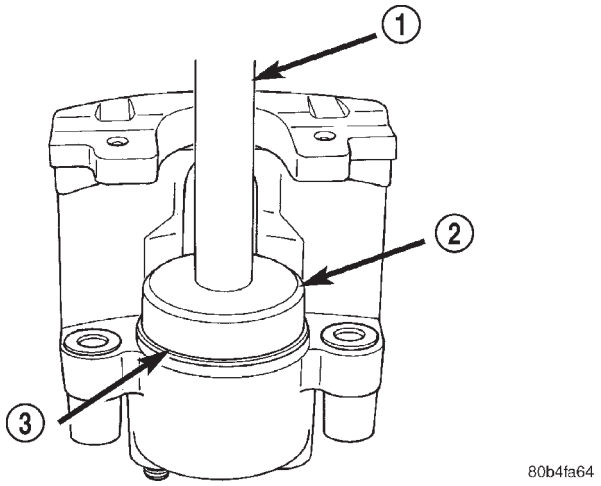

Fig. 43 Piston Dust Boot Installation

1 - HANDLE
2 - INSTALLER
3 - DUST BOOT

(10) Remove supports and lower vehicle.
(11) Verify brake fluid level.

INSTALLATION - REAR DISC BRAKE CALIPER

(1) Install the inboard brake shoe (Fig. 24).
(2) Lubricate the slide pins and slide pin bushings with Dow Corning® grease G807 or the grease provided with the caliper.
(3) Install the caliper on the anchor.
(4) Install the caliper slide pin and tighten to 29-41 N·m (21-30 ft. lbs.).
(5) Install the caliper slide pin caps.
(6) Install the caliper support spring in the top end of the caliper and under the anchor. Then install other end into the lower caliper hole. Hold the spring into the caliper hole with your thumb while prying the end of the spring out and down under the anchor with a screw drive.

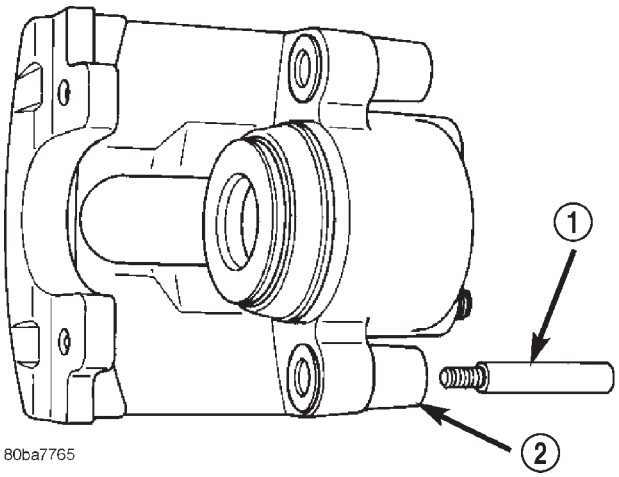

Fig. 44 Slide Pin And Bushing

1 - CALIPER SLIDE PIN
2 - BUSHING

CAUTION: Verify brake hose is not twisted or kinked before tightening fitting bolt.

(7) Install brake hose to caliper with a **new** gasket washers and tighten banjo bolt to 31 N·m (23 ft. lbs.).
(8) Fill and bleed brake system.
(9) Install wheel and tire assemblies.
(10) Remove supports and lower vehicle.

FLUID

DIAGNOSIS AND TESTING - BRAKE FLUID CONTAMINATION

Indications of fluid contamination are swollen or deteriorated rubber parts.

Swollen rubber parts indicate the presence of petroleum in the brake fluid.

To test for contamination, put a small amount of drained brake fluid in clear glass jar. If fluid separates into layers, there is mineral oil or other fluid contamination of the brake fluid.

If brake fluid is contaminated, drain and thoroughly flush system. Replace master cylinder with reservoir, caliper seals, HCU and all hydraulic fluid hoses.

SPECIFICATIONS

BRAKE FLUID

The brake fluid used in this vehicle must conform to DOT 3 specifications and SAE J1703 standards.

SPECIFICATIONS (Continued)

No other type of brake fluid is recommended or approved for usage in the vehicle brake system. Use only Mopar brake fluid or an equivalent from a tightly sealed container.

CAUTION: Never use reclaimed brake fluid or fluid from an container which has been left open. An open container of brake fluid will absorb moisture from the air and contaminate the fluid.

CAUTION: Never use any type of a petroleum-based fluid in the brake hydraulic system. Use of such type fluids will result in seal damage of the vehicle brake hydraulic system causing a failure of the vehicle brake system. Petroleum based fluids would be items such as engine oil, transmission fluid, power steering fluid, etc.

FLUID RESERVOIR

REMOVAL

(1) Remove reservoir cap and remove fluid with a **clean**suction gun.

(2) Remove the wire connector from the brake fluid level sensor.

(3) Insert the tool (Fig. 45) provided with the reservoir to release the reservoir retaining tabs.

(4) Pull the reservoir straight up out of the cylinder.

(5) Remove and discard grommets from the cylinder body.

INSTALLATION

(1) Lubricate new grommets with clean brake fluid. Install new grommets into the cylinder body.

CAUTION: Do not use tools to install the grommets. Tools may cut, or tear the grommets. Install the grommets using finger pressure only.

(2) Start reservoir in grommets then press the reservoir straight down to seat the reservoir into the cylinder grommets.

CAUTION: Do not rock the reservoir during installation.

(3) Verify retaining tabs are seated.

(4) Install the wire connector to the brake fluid level sensor.

(5) Fill master cylinder.

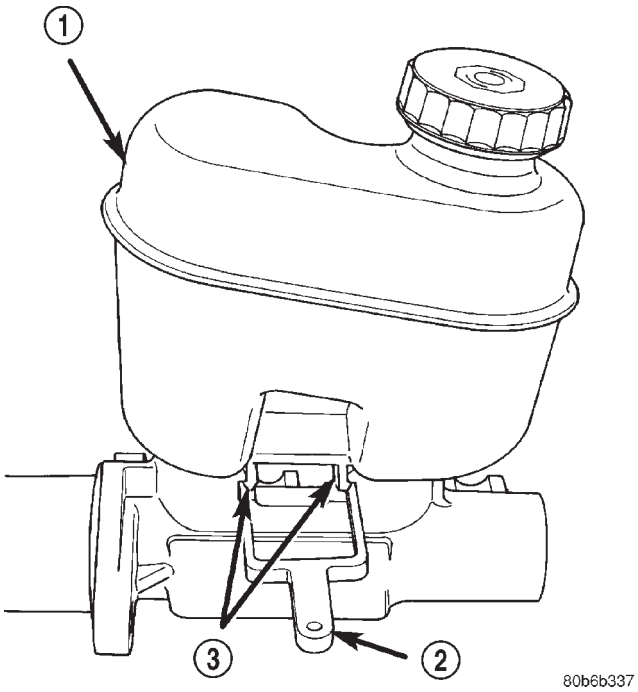

Fig. 45 Release Tool

1 - RESERVOIR
2 - RELEASE TOOL
3 - RETAINING TABS

MASTER CYLINDER

DESCRIPTION

The master cylinder body is made of aluminum and contains a primary and secondary piston assembly. The cylinder body including the piston assemblies are not serviceable. If diagnosis indicates an internal problem with the cylinder body, it must be replaced as an assembly. The master cylinder has a removable reservoir and fluid level indicator. The reservoir, reservoir grommets, reservoir cap and fluid level switch are the only replaceable parts on the master cylinder.

OPERATION

The master cylinder bore contains a primary and secondary piston. The primary piston supplies hydraulic pressure to the front brakes. The secondary piston supplies hydraulic pressure to the rear brakes. The master cylinder reservoir stores reserve brake fluid for the hydraulic brake circuits.

DIAGNOSIS AND TESTING - MASTER CYLINDER/POWER BOOSTER

NOTE: Inspect and repair any external fluid leaks before performing test.

MASTER CYLINDER (Continued)

(1) Start engine and check booster vacuum hose connections. A hissing noise indicates vacuum leak. Correct any vacuum leak before proceeding.

(2) Stop engine and shift transmission into Neutral.

(3) Pump brake pedal until all vacuum reserve in booster is depleted.

(4) Press and hold brake pedal under light foot pressure. The pedal should hold firm, if the pedal falls away the master cylinder or HCU may be faulty (internal leakage).

(5) Start engine and note pedal action. It should fall away slightly under light foot pressure then hold firm. If no pedal action is discernible, power booster, vacuum supply, or vacuum check valve is faulty. Proceed to the POWER BOOSTER VACUUM TEST.

(6) If the POWER BOOSTER VACUUM TEST passes, rebuild booster vacuum reserve as follows: Release brake pedal. Increase engine speed to 1500 rpm, close the throttle and turn off the engine.

(7) Wait a minimum of 90 seconds and try brake action again. Booster should provide two or more vacuum assisted pedal applications. If vacuum assist is not provided, some component of the booster is faulty.

POWER BOOSTER VACUUM TEST

(1) Connect vacuum gauge to booster check valve with short length of hose and T-fitting (Fig. 46).

(2) Start and run engine at curb idle speed for one minute.

(3) Observe the vacuum supply. If vacuum supply is not adequate, repair vacuum supply.

(4) Clamp hose shut between vacuum source and check valve.

(5) Stop engine and observe vacuum gauge.

(6) If vacuum drops more than one inch HG (33 millibars) within 15 seconds, booster diaphragm, check valve or check valve seal/grommet is faulty.

POWER BOOSTER CHECK VALVE TEST

(1) Disconnect vacuum hose from check valve.

(2) Remove check valve and valve seal from booster.

(3) Use a hand operated vacuum pump for test.

(4) Apply 51-67 kPa (15-20 in.) vacuum at large end of check valve (Fig. 47).

(5) Vacuum should hold steady. If gauge on pump indicates vacuum loss the check valve and seal should be replaced.

STANDARD PROCEDURE - BLEEDING PROCEDURE

A new master cylinder should be bled before installation on the vehicle. Required bleeding tools include bleed tubes and a wood dowel to stroke the pistons. Bleed tubes can be fabricated from brake line.

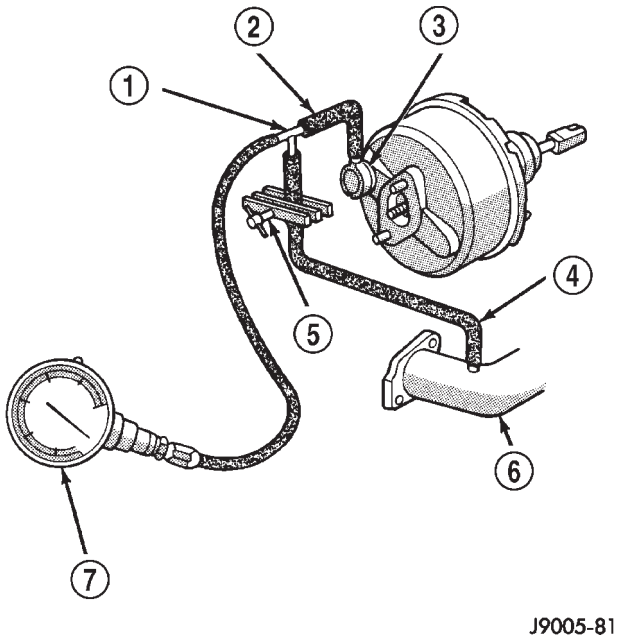

Fig. 46 Typical Booster Vacuum Test Connections

1 - TEE FITTING
2 - SHORT CONNECTING HOSE
3 - CHECK VALVE
4 - CHECK VALVE HOSE
5 - CLAMP TOOL
6 - INTAKE MANIFOLD
7 - VACUUM GAUGE

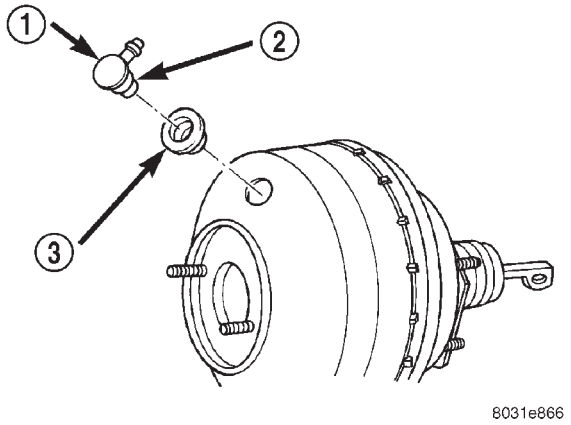

Fig. 47 Vacuum Check Valve And Seal

1 - BOOSTER CHECK VALVE
2 - APPLY TEST VACUUM HERE
3 - VALVE SEAL

(1) Mount master cylinder in vise with brass jaws.

(2) Attach bleed tubes to cylinder outlet ports. Then position each tube end into the bottom of the reservoir (Fig. 48).

(3) Fill reservoir with fresh brake fluid.

(4) Press cylinder pistons inward with wood dowel. Then release pistons and allow them to return under

MASTER CYLINDER (Continued)

spring pressure. Continue bleeding operations until air bubbles are no longer visible in fluid.

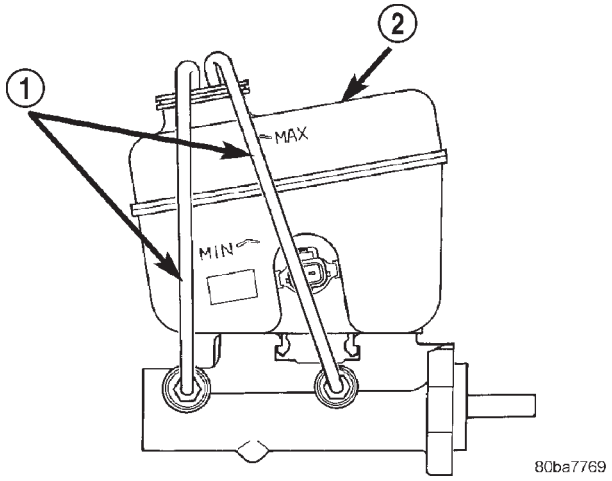

Fig. 48 Master Cylinder Bleeding

1 - BLEEDING TUBES
2 - RESERVOIR

REMOVAL

(1) Remove the wire connector from the brake fluid level sensor.
(2) Remove brake lines from master cylinder.
(3) Remove nuts that attach master cylinder to booster studs (Fig. 49).
(4) Remove master cylinder from booster.

INSTALLATION

NOTE: Bleed new master cylinder on bench before installation, refer to Service Procedures.

(1) Have an assistant depress the brake pedal while guiding the master cylinder on the booster rod and mounting studs.

CAUTION: Do not depress brake pedal too hard and ensure the booster rod is in the master cylinder piston or booster/master cylinder damage will occur.

(2) Install master cylinder mounting nuts and tighten nuts to 25 N·m (18 lb. lbs.).

NOTE: Use original or factory replacement nuts only.

(3) Install brake lines and tighten to 16 N·m (144 in. lbs.).
(4) Install fluid level sensor connector.
(5) Fill and bleed brake system.

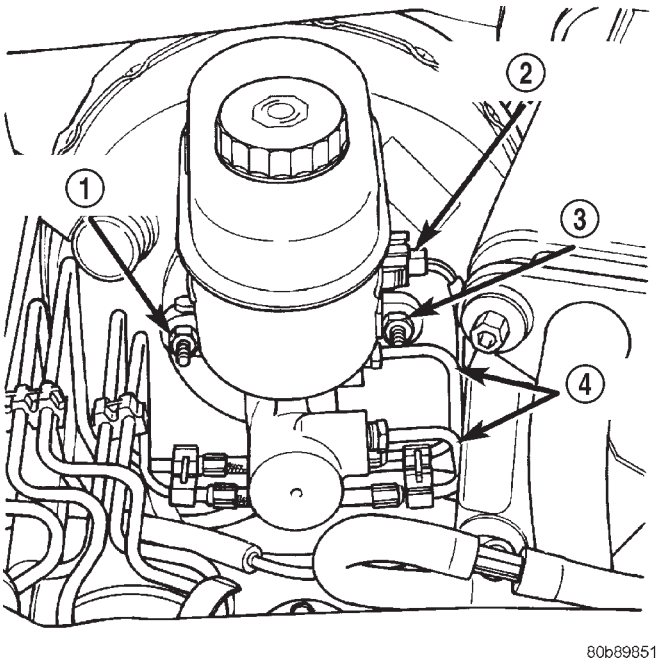

Fig. 49 Master Cylinder Mounting

1 - MOUNTING NUT
2 - SENSOR CONNECTOR
3 - MOUNTING NUT
4 - BRAKE LINES

PEDAL

DESCRIPTION

A suspended-type brake pedal is used, the pedal pivots on a shaft mounted in the pedal support bracket. The bracket is attached to the dash panel.

The brake pedal assembly and pedal pad are the only serviceable component.

OPERATION

The brake pedal is attached to the booster push rod. When the pedal is depressed, the primary booster push rod is depressed which moves the booster secondary rod. The booster secondary rod depresses the master cylinder piston.

REMOVAL

(1) Remove retainer clip that holds booster to pedal pin (Fig. 50).
(2) Remove nut from pedal shaft.
(3) Slide pedal shaft out and remove brake pedal.
(4) Remove pedal bushings (Fig. 51) if they are to be replaced.

INSTALLATION

(1) Lubricate bushings, pedal shaft and pedal pin with Mopar multi-mileage grease.
(2) Install bushings into pedal.

PEDAL (Continued)

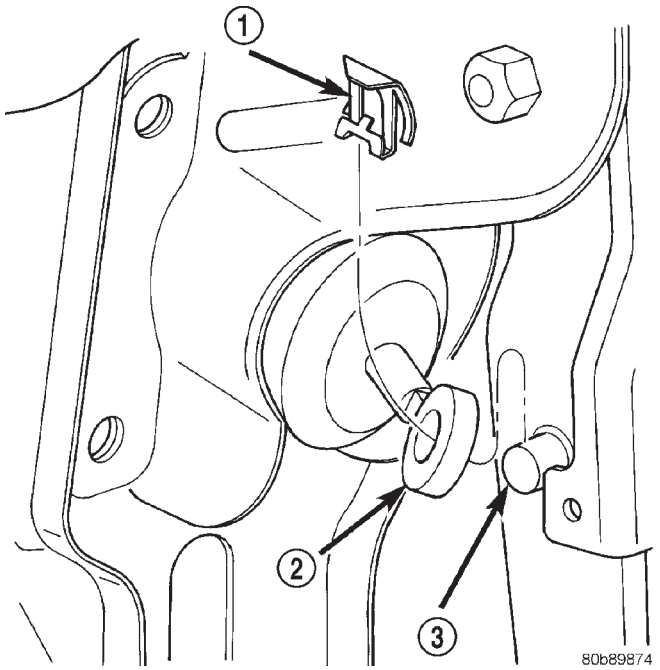

Fig. 50 Push Rod Retainer Clip

1 - RETAINER CLIP
2 - PUSH ROD
3 - PEDAL PIN

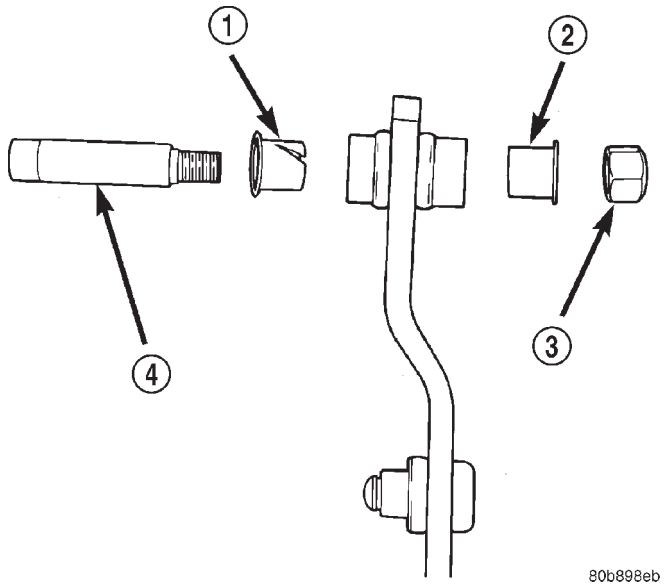

Fig. 51 Pedal Bushings

1 - BUSHING
2 - BUSHING
3 - SHAFT NUT
4 - PEDAL SHAFT

(3) Position pedal in bracket and install pedal shaft in support and through pedal.

(4) Install new nut on pedal shaft and tighten to 27 N·m (20 ft. lbs.).

NOTE: Pedal shaft nut should not be reused.

(5) Install booster push rod on pedal pin and install retainer clip on pedal pin.

(6) Check and adjust stop lamp switch if necessary.

POWER BRAKE BOOSTER

DESCRIPTION

The booster assembly consists of a housing divided into separate chambers by two internal diaphragms. The outer edge of each diaphragm is attached to the booster housing.

Two push rods are used in the booster. The primary push rod connects the booster to the brake pedal. The secondary push rod connects the booster to the master cylinder to stroke the cylinder pistons.

OPERATION

The atmospheric inlet valve is opened and closed by the primary push rod. Booster vacuum supply is through a hose attached to an intake manifold fitting at one end and to the booster check valve at the other. The vacuum check valve in the booster housing is a one-way device that prevents vacuum leak back.

Power assist is generated by utilizing the pressure differential between normal atmospheric pressure and a vacuum. The vacuum needed for booster operation is taken directly from the engine intake manifold. The entry point for atmospheric pressure is through a filter and inlet valve at the rear of the housing (Fig. 52).

The chamber areas forward of the booster diaphragms are exposed to vacuum from the intake manifold. The chamber areas to the rear of the diaphragms, are exposed to normal atmospheric pressure of 101.3 kilopascals (14.7 pounds/square in.).

Brake pedal application causes the primary push rod to open the atmospheric inlet valve. This exposes the area behind the diaphragms to atmospheric pressure. The resulting pressure differential provides the extra apply force for power assist.

The booster check valve, check valve grommet and booster seals are serviceable.

REMOVAL

(1) Remove the master cylinder.

(2) Disconnect vacuum hose at booster check valve.

(3) Remove retainer clip (Fig. 53) that holds booster push rod on pedal pin . Then slide push rod off pin.

(4) Remove four nuts (Fig. 54) that attach booster to dash panel.

POWER BRAKE BOOSTER (Continued)

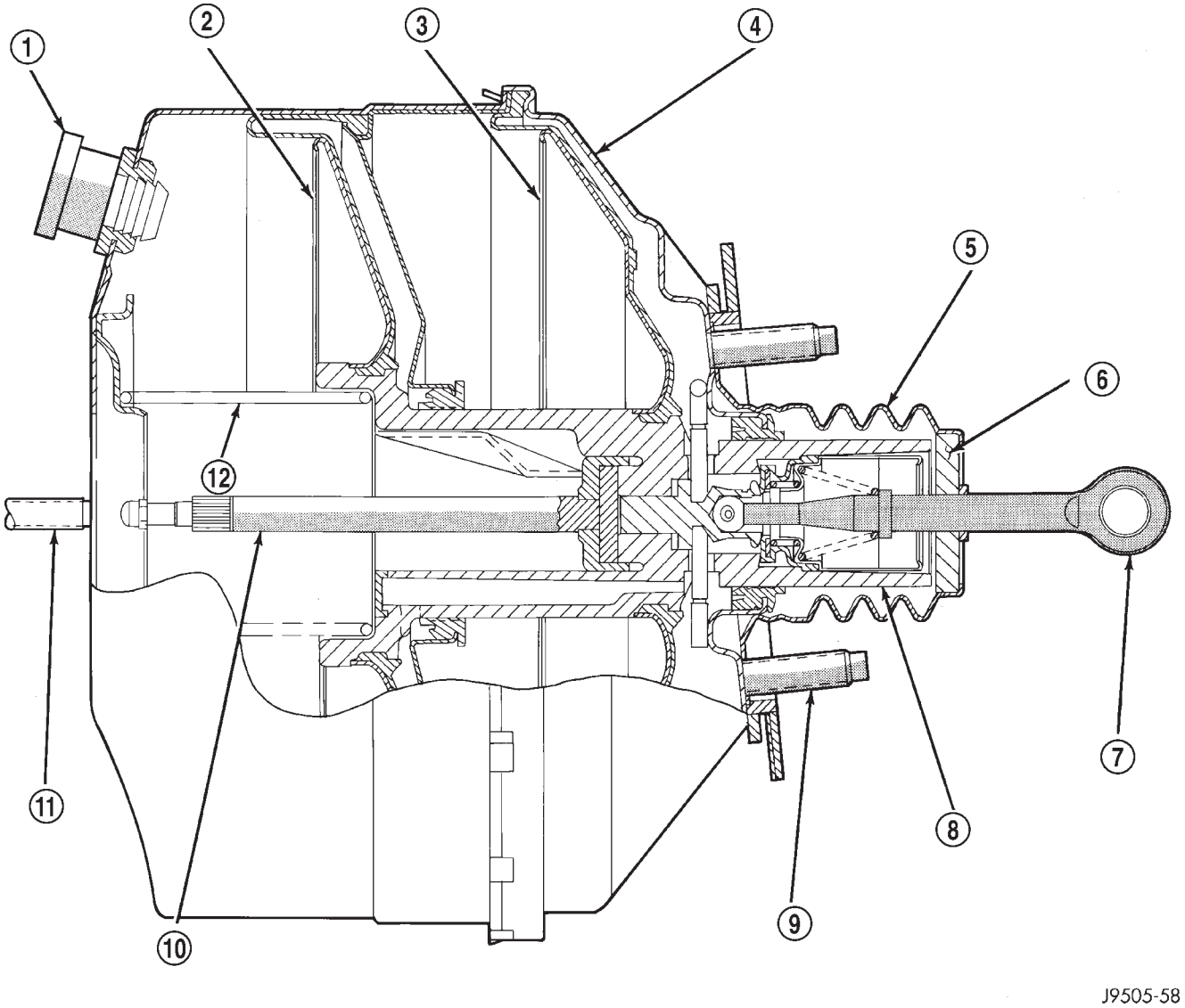

Fig. 52 Power Brake Booster–Typical

1 - VACUUM CHECK VALVE
2 - FRONT DIAPHRAGM
3 - REAR DIAPHRAGM
4 - HOUSING
5 - SEAL
6 - AIR FILTER
7 - PRIMARY PUSH ROD (TO BRAKE PEDAL)
8 - ATMOSPHERIC INLET VALVE ASSEMBLY
9 - BOOSTER MOUNTING STUDS (4)
10 - SECONDARY PUSH ROD (TO MASTER CYLINDER)
11 - MASTER CYLINDER MOUNTING STUD (2)
12 - SPRING

(5) In engine compartment, slide booster forward, tilt it upward slightly, and remove it from engine compartment.

INSTALLATION

(1) Check condition of grommet that secures check valve in booster. Replace grommet if cut, torn, or loose.

(2) Install new booster dash seal.

(3) Align and position booster on engine compartment side of dash panel.

(4) Inside passenger compartment:

(a) Lubricate pedal pin Mopar multi-mileage grease.

(b) Install booster attaching nuts on studs. Tighten attaching nuts to 39 N·m (29 ft. lbs.).

(c) Slide booster push rod on pedal pin. Then secure rod to pin with retainer clip.

(5) In engine compartment, attach vacuum hose to booster check valve.

(6) Install the master cylinder with new gasket and nuts.

POWER BRAKE BOOSTER (Continued)

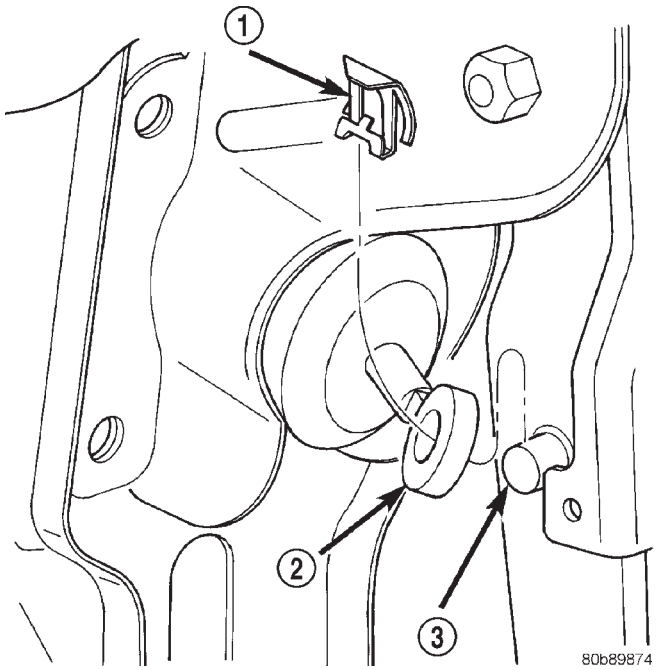

Fig. 53 Retainer Clip

1 - RETAINER CLIP
2 - PUSH ROD
3 - PEDAL PIN

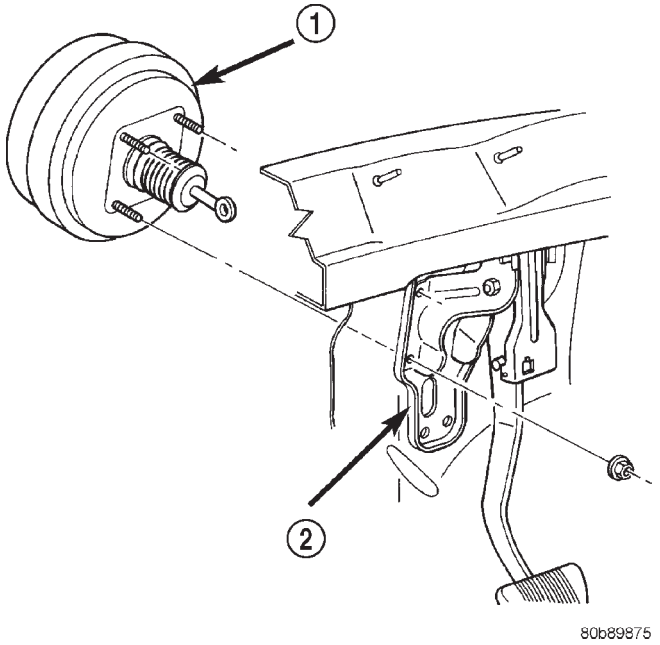

Fig. 54 Power Brake Booster Mounting

1 - BOOSTER
2 - DASH PANEL

CAUTION: The master cylinder installation procedure must be perform as written or damage to the booster/master cylinder may occur.

(7) Fill and bleed brake system.

ROTORS

DIAGNOSIS AND TETSING - FRONT DISC BRAKE ROTOR

ROTOR MINIMUM THICKNESS

Rotor minimum usable thickness is 24.5 mm (0.964 in.). Do not resurface a rotor if machining would cause thickness to fall below this limit.

Measure rotor thickness at the center of the brake shoe contact surface. Replace the rotor if worn below minimum thickness, or if refinishing would reduce thickness below the allowable minimum.

FRONT ROTOR THICKNESS VARIATION

Variations in rotor thickness will cause pedal pulsation, noise and shudder.

Measure rotor thickness a minimum of six points around the rotor face. Position the micrometer approximately 19 mm (3/4 in.) from the rotor outer circumference for each measurement (Fig. 55).

Thickness should not vary by more than 0.0127 mm (0.0005 in.) from point to point on the rotor. Refinish or replace the rotor if necessary.

NOTE: Refinishing the rotor using on-car refinishing equipment is recommended.

Front rotors and hub/bearings are matched mounted for minimum lateral runout. Before removing the rotor, mark the rotor and hub/bearing to maintain original orientation.

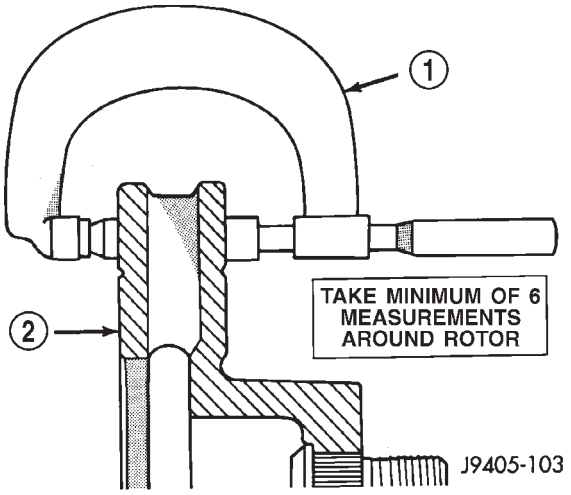

Fig. 55 Measuring Rotor Thickness Variation

1 - MICROMETER
2 - ROTOR

ROTORS (Continued)

FRONT ROTOR LATERAL RUNOUT

Check rotor lateral runout whenever pedal pulsation, or rapid, uneven brake lining wear has occurred.

The rotor must be securely clamped to the hub to ensure an accurate runout measurement. Secure the rotor with a minimum of 3 lug nuts and large diameter flat washers on each stud.

Use a dial indicator to check lateral runout (Fig. 56).

Maximum allowable rotor lateral runout is 0.76 mm (0.003 in.).

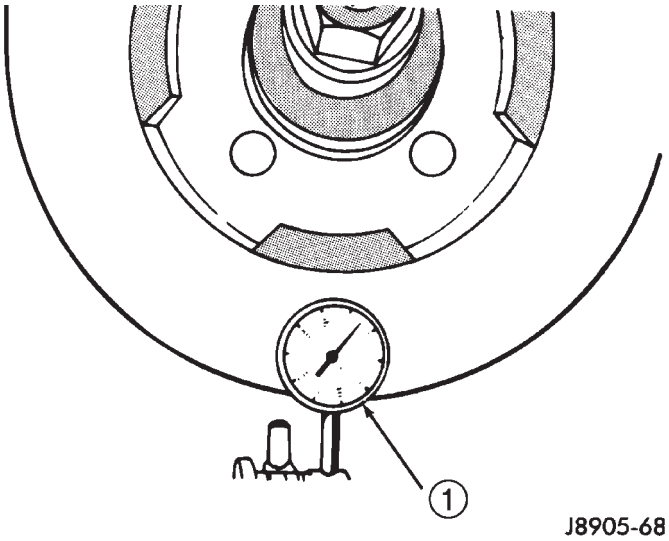

Fig. 56 Checking Rotor Lateral Runout

1 - DIAL INDICATOR

DIAGNOSIS AND TESTING - REAR DISC BRAKE ROTOR

ROTOR MINIMUM THICKNESS

Minimum usable thickness of the rear disc brake rotor is 8.5 mm (0.335 in.). The thickness specification is located on the center section of the rotor.

Never resurface a rotor if machining would cause thickness to fall below this limit.

Measure rotor thickness at the center of the brake shoe contact surface. Replace the rotor if worn below minimum thickness, or if refinishing would reduce thickness below the allowable minimum.

REAR ROTOR THICKNESS VARIATION

Variations in rotor thickness will cause pedal pulsation, noise and shudder.

Measure rotor thickness at a minimum of six points around the rotor face. Position the micrometer approximately 19 mm (3/4 in.) from the rotor outer circumference for each measurement (Fig. 55).

Thickness should not vary by more than 0.0127 mm (0.0005 in.) from point to point on the rotor. Refinish or replace the rotor if necessary.

REAR ROTOR LATERAL RUNOUT

Check rotor lateral runout whenever diagnosis indicates pedal pulsation and rapid, uneven brake lining wear.

The rotor must be securely clamped to the hub to ensure an accurate runout measurement. Secure the rotor with the wheel nuts and 4 or 5 large diameter flat washers on each stud.

Use a dial indicator to check lateral runout (Fig. 56). Maximum allowable lateral runout is 0.76 mm (0.003 in.).

STANDARD PROCEDURES - DISC ROTOR MACHINING

The disc brake rotor can be machined if scored or worn. The lathe must machine both sides of the rotor simultaneously with dual cutter heads. The rotor mounting surface must be clean before placing on the lathe. Equipment capable of machining only one side at a time may produce a tapered rotor.

NOTE: A hub mounted on-vehicle lathe is recommended. This type of lathe trues the rotor to the vehicles hub/bearing.

CAUTION: Brake rotors that do not meet minimum thickness specifications before or after machining must be replaced.

REMOVAL - FRONT DISC BRAKE ROTOR

NOTE: Front rotors and hub/bearings are matched mounted for minimum lateral runout. Before removing the rotor, mark the rotor and hub/bearing to maintain original orientation.

(1) Raise and support the vehicle.

(2) Remove wheel and tire assembly.

(3) Remove the caliper anchor bolts (Fig. 57) and remove the caliper and anchor as an assembly from the steering knuckle.

(4) Secure caliper anchor assembly to nearby suspension part with a wire. **Do not allow brake hose to support caliper weight.**

(5) Mark the rotor and hub/bearing to maintain original orientation. Remove retainers securing rotor to hub studs.

(6) Remove rotor from hub/bearing.

ROTORS (Continued)

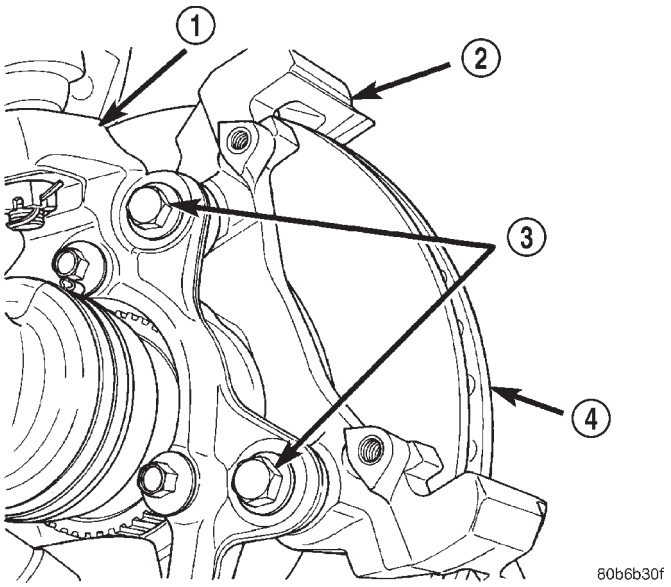

Fig. 57 Caliper Anchor Bolts

1 - KNUCKLE
2 - ANCHOR
3 - ANCHOR BOLTS
4 - ROTOR

REMOVAL - REAR DISC BRAKE ROTOR

(1) Raise and support the vehicle.
(2) Remove wheel and tire assembly.
(3) Remove the caliper anchor bolts (Fig. 58).
(4) Remove caliper and anchor as an assembly.
(5) Secure caliper anchor assembly to nearby suspension part with wire. **Do not allow brake hose to support caliper weight.**
(6) Remove retainers securing rotor to axle studs.
(7) Remove rotor off axle studs.

INSTALLATION - FRONT DISC BRAKE ROTOR

NOTE: If a new rotor is installed it must be match mounted to the hub/bearing.

(1) Install rotor on hub studs in its original location.
(2) Install the caliper anchor assembly on the knuckle. Install anchor bolts and tighten to 90-115 N·m (66-85 ft. lbs.).
(3) Install wheel and tire assembly.
(4) Remove support and lower the vehicle.
(5) Pump brake pedal to seat caliper pistons and brake shoes. Do not move vehicle until firm brake pedal is obtained.

INSTALLATION - REAR DISC BRAKE ROTOR

(1) Install rotor on axle studs.
(2) Install the caliper anchor assembly.

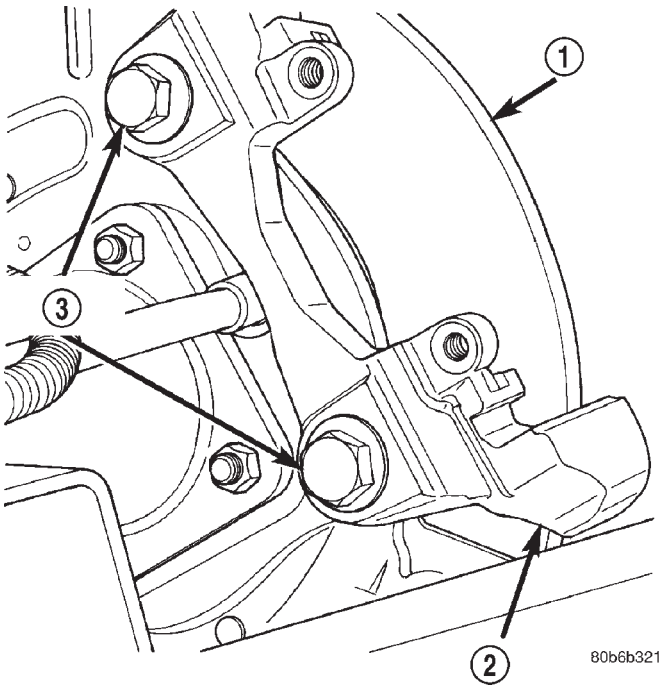

Fig. 58 Caliper Anchor Bolts

1 - ROTOR
2 - ANCHOR
3 - ANCHOR BOLTS

(3) Install anchor bolts and tighten to 90-115 N·m (66-85 ft. lbs.).
(4) Install wheel and tire assembly.
(5) Remove support and lower the vehicle.
(6) Pump brake pedal until caliper pistons and brake shoes are seated.

PARKING BRAKE

OPERATION

The parking brakes operated by a automatic tensioner mechanism built into the hand lever and cable system. The front cable is connected to the hand lever and the equalizer. The rear cables attached to the equalizer and the parking brake shoe actuator.

A set of drum type brake shoes are used for parking brakes. The shoes are mounted to the rear disc brake adaptor. The parking brake drum is integrated into the rear disc brake rotor.

Parking brake cable adjustment is controlled by an automatic tensioner mechanism. The only adjustment if necessary is to the park brake shoes if the linings are worn.

PARKING BRAKE (Continued)

DIAGNOSIS AND TESTING - PARKING BRAKE

NOTE: Parking brake adjustment is controlled by an automatic cable tensioner and does not require adjustment. The only adjustment that may be necessary would be to the park brake shoes if they are worn.

The parking brake switch is in circuit with the red warning lamp in the dash. The switch will cause the lamp to illuminate only when the parking brakes are applied. If the lamp remains on after parking brake release, the switch or wires are faulty.

If the red lamp comes on a fault has occurred in the front or rear brake hydraulic system.

If the red warning lamp and yellow warning lamp come on, the electronic brake distribution may be at fault.

In most cases, the actual cause of an improperly functioning parking brake (too loose/too tight/won't hold), can be traced to a parking brake component.

NOTE: The leading cause of improper parking brake operation, is excessive clearance between the parking brake shoes and the shoe braking surface. Excessive clearance is a result of lining and/or drum wear, drum surface machined oversize.

Excessive parking brake lever travel (sometimes described as a loose lever or too loose condition), is the result of worn brake shoes, improper brake shoe adjustment, or improperly assembled brake parts.

A too loose condition can also be caused by inoperative or improperly assembled parking brake shoe parts.

A condition where the parking brakes do not hold, will most probably be due to a wheel brake component.

Items to look for when diagnosing a parking brake problem, are:

- Brake shoe wear
- Drum surface (in rear rotor) machined oversize
- Front cable not secured to lever
- Rear cable not attached to actuator
- Rear cable seized
- Parking brake lever not seated
- Parking brake lever bind

CABLES

REMOVAL - FRONT PARKING BRAKE CABLE

(1) Remove center console,(Refer to 23 - BODY/INTERIOR/FLOOR CONSOLE - REMOVAL).

(2) Lift up rear seat and carpet covering the parking brake cables.

(3) Place a screw driver through the front cable eyelet (Fig. 59)and pry back on the front cable.

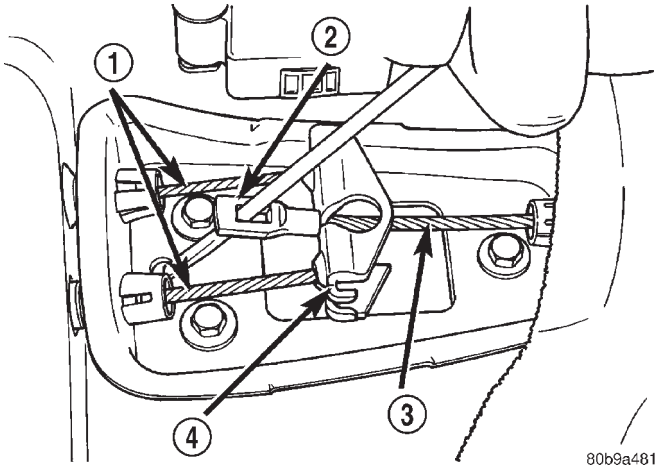

Fig. 59 Front Cable Eyelet

1 - REAR CABLES
2 - FRONT CABLE EYELET
3 - FRONT CABLE
4 - EQUALIZER

(4) Have an assistant pry down the lock out spring through the hole in the side of the park brake lever (Fig. 60) with a small screw driver. Then slowly release the front cable.

NOTE: Their should be slack in the cable if the lock out spring is engaged.

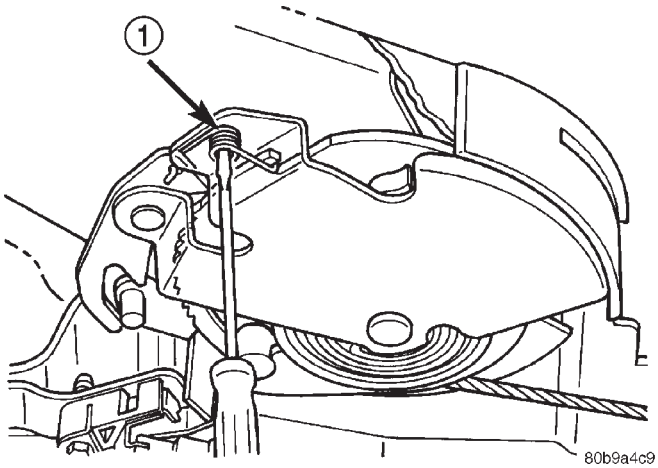

Fig. 60 Lock Out Spring

1 - LOCK OUT SPRING

(5) Disengage front cable end from the equalizer (Fig. 61).

(6) Disengage front cable end from the parking brake lever.

CABLES (Continued)

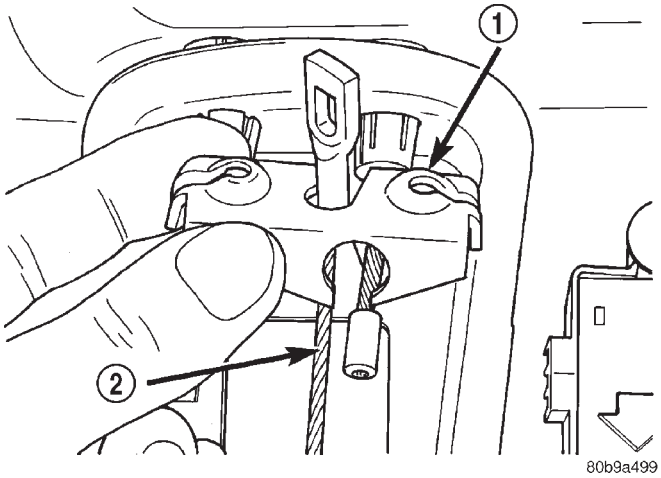

Fig. 61 Cable Equalizer

1 - EQUALIZER
2 - FRONT CABLE

(7) Remove the front carpet,(Refer to 23 - BODY/INTERIOR/CARPETS AND FLOOR MATS - REMOVAL).

(8) Remove front cable retainer nuts (Fig. 62) from the floor pan.

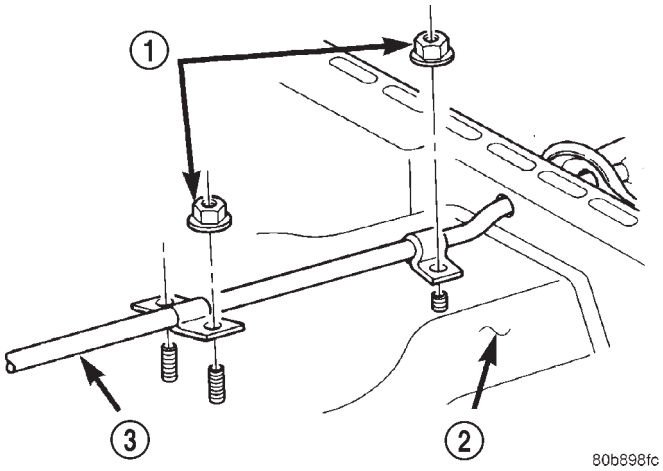

Fig. 62 Front Parking Brake Cable

1 - RETAINER NUT
2 - FLOOR PAN
3 - FRONT CABLE

(9) Compress the cable retainers with a 13 mm wrench (Fig. 63). Remove the cable from parking brake lever bracket and equalizer bracket.

REMOVAL - REAR PARKING BRAKE CABLES

(1) Remove center console, (Refer to 23 - BODY/INTERIOR/FLOOR CONSOLE - REMOVAL).

(2) Lift up rear seat and carpet covering the parking brake cables.

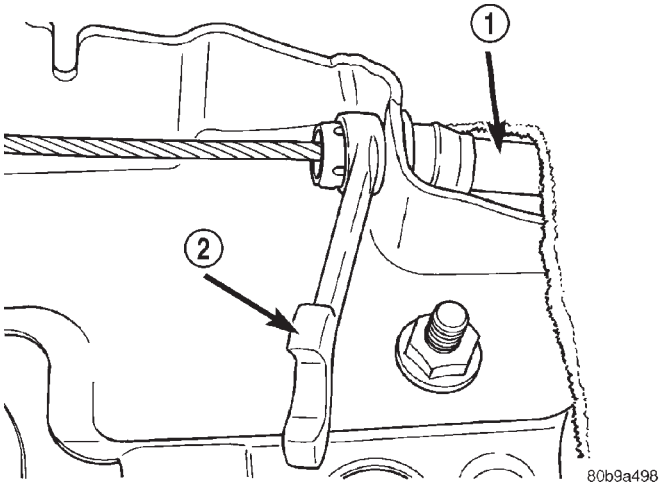

Fig. 63 Brake Lever Bracket

1 - FRONT CABLE
2 - WRENCH

(3) Place a screw driver through the front cable eyelet (Fig. 64) and pry back on the front cable.

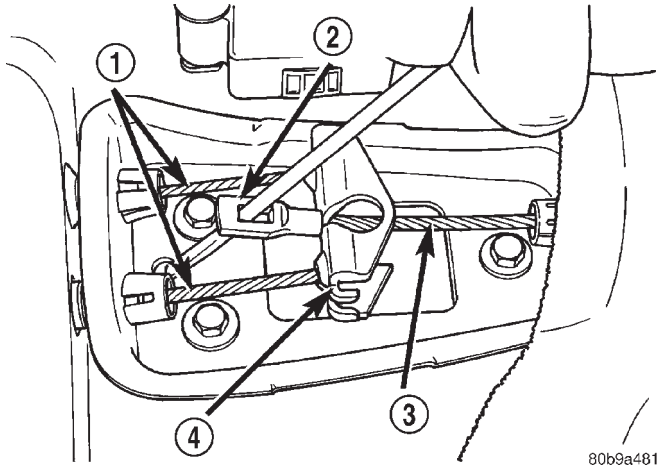

Fig. 64 Front Cable Eyelet

1 - REAR CABLES
2 - FRONT CABLE EYELET
3 - FRONT CABLE
4 - EQUALIZER

(4) Have an assistant pry down the lock out spring through the hole in the side of the park brake lever (Fig. 65) with a small screw driver. Then slowly release the front cable.

NOTE: Their should be slack in the cable if the lock out spring is engaged.

(5) Disengage rear cables ends from the equalizer.

(6) Compress the cable retainers with a 13 mm wrench (Fig. 66) and remove the cable from equalizer bracket.

CABLES (Continued)

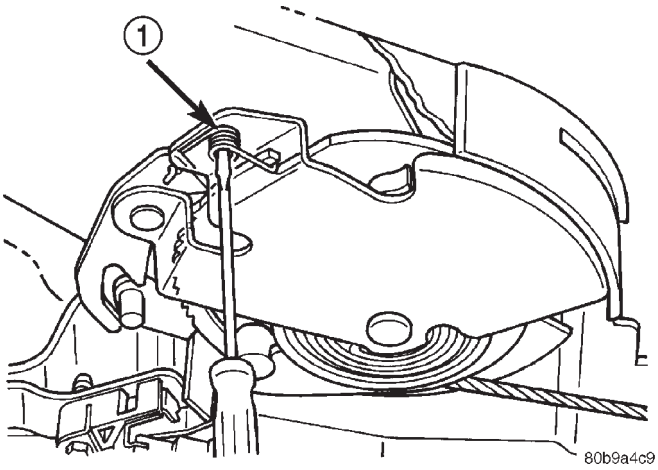

Fig. 65 Lock Out Spring

1 - LOCK OUT SPRING

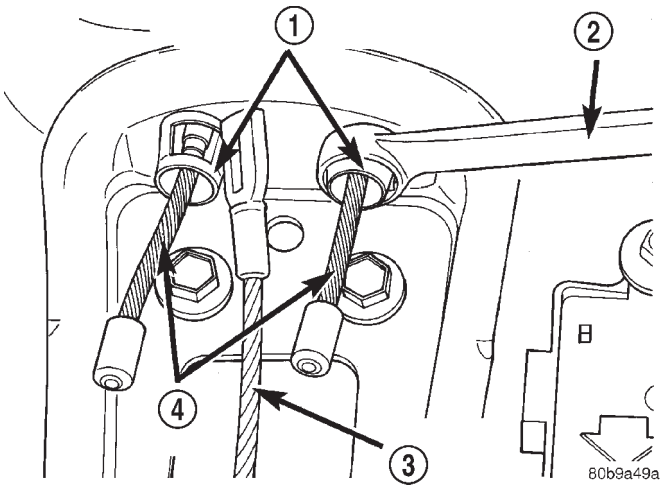

Fig. 66 Cable Retainers

1 - CABLE RETAINER
2 - WRENCH
3 - FRONT CABLE
4 - REAR CABLES

(7) Raise and support the vehicle.

(8) Remove the wheel and tire assemblies.

(9) Remove the brake calipers, caliper anchors and rotors.

(10) Remove the ABS sensor wiring harness (Fig. 67) from the rear brake cables.

(11) Remove the cable retainer bolts (Fig. 67) from the rear spring pads.

(12) Pull the cables out of the upper suspension arm brackets.

(13) Push the cable in and lift up the end of cable with a small screw driver to disengage the cable from the parking brake actuator (Fig. 68).

(14) Remove the cable from the vehicle.

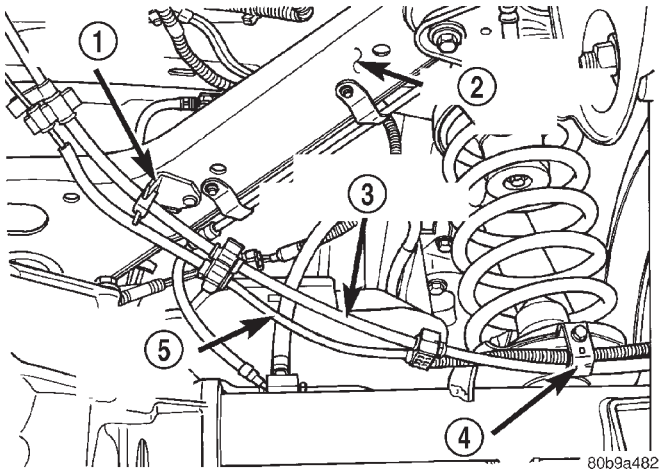

Fig. 67 Left Rear Parking Brake Cable

1 - CABLE BRACKET
2 - UPPER SUSPENSION ARM
3 - PARKING BRAKE CABLE
4 - CABLE RETAINER
5 - ABS SENSOR WIRING

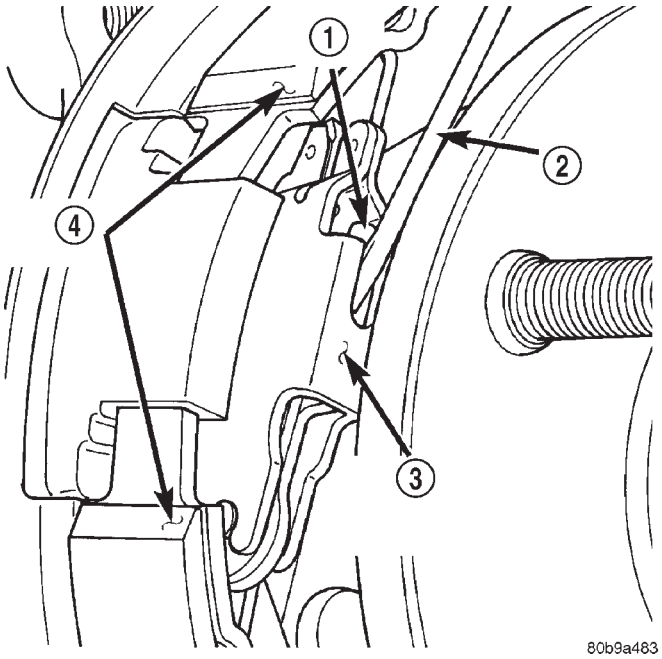

Fig. 68 Parking Brake

1 - CABLE END
2 - SCREW DRIVER
3 - PARKING BRAKE ACTUATOR
4 - BRAKE SHOES

INSTALLATION - FRONT PARKING BRAKE CABLE

(1) Install thecable into the parking brake lever bracket and equalizer bracket.

(2) Install the front cable to the floor pan and install retainer nuts.

CABLES (Continued)

(3) Engage the front cable ends to the parking brake lever and equalizer.

(4) Install the front carpet, (Refer to 23 - BODY/INTERIOR/CARPETS AND FLOOR MATS - INSTALLATION).

(5) Pull on the lever to release the lock out spring.

(6) Install the center console, (Refer to 23 - BODY/INTERIOR/FLOOR CONSOLE - INSTALLATION).

(7) Fold down the rear carpet cover and rear seat.

INSTALLATION - REAR PARKING BRAKE CABLES

(1) Install the cables through the caliper anchor mount. Then push the end of cable strand in to engage the cable end to the parking brake actuator.

(2) Feed the other end of the cables through the body and into the equalizer bracket (Fig. 69).

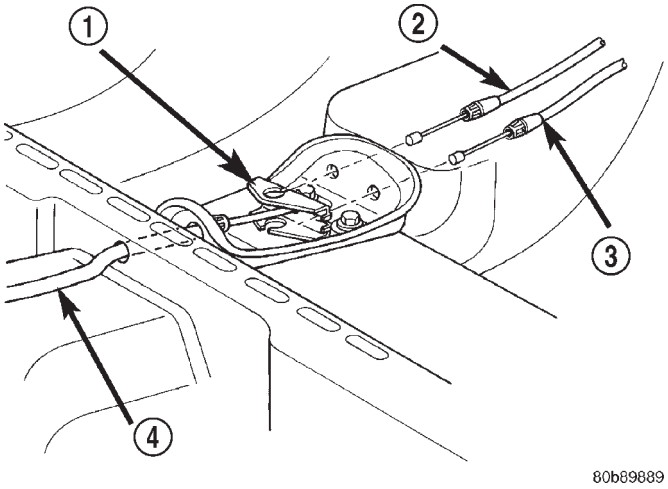

Fig. 69 Equalizer Bracket

1 - EQUALIZER
2 - RIGHT REAR CABLE
3 - LEFT REAR CABLE
4 - FRONT CABLE

(3) Push the cables into the upper suspension arm brackets.

(4) Install the cable retainer bolts to the rear spring pads.

(5) Install the ABS sensor wiring harness to the rear brake cables.

(6) Install the rotors, caliper anchors and brake calipers.

(7) Install the wheel and tire assemblies.

(8) Remove support and lower the vehicle.

(9) Engage the cable ends into the parking brake equalizer.

(10) Pull on the lever to release the lock out spring.

(11) Install center console, (Refer to 23 - BODY/INTERIOR/FLOOR CONSOLE - INSTALLATION).

(12) Fold down the rear carpet cover and rear seat.

(13) Verify parking brake operation.

LEVER

REMOVAL

(1) Remove center console,(Refer to 23 - BODY/INTERIOR/FLOOR CONSOLE - REMOVAL).

(2) Lift up rear seat and carpet covering the parking brake cables.

(3) Place a screw driver through the front cable eyelet (Fig. 70) and pry back on the front cable.

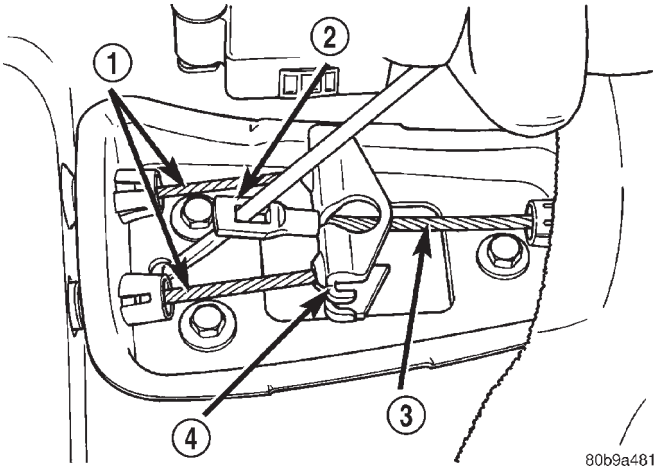

Fig. 70 Front Cable

1 - REAR CABLES
2 - FRONT CABLE EYELET
3 - FRONT CABLE
4 - EQUALIZER

(4) Have an assistant pry down the lock out spring through the hole in the side of the park brake lever (Fig. 71) with a small screw driver. Then slowly release the front cable.

NOTE: Their should be slack in the cable if the lock out spring is engaged.

(5) Disconnect parking brake switch wiring connector.

(6) Disengage front cable end from parking brake lever.

(7) Compress the cable retainer with a 13 mm wrench (Fig. 72) and remove the cable from the parking brake lever bracket.

(8) Remove the park brake lever mounting nuts and console bracket. (Fig. 73).

(9) Lift the lever assembly off the mounting studs and pull the front cable out of the lever bracket.

LEVER (Continued)

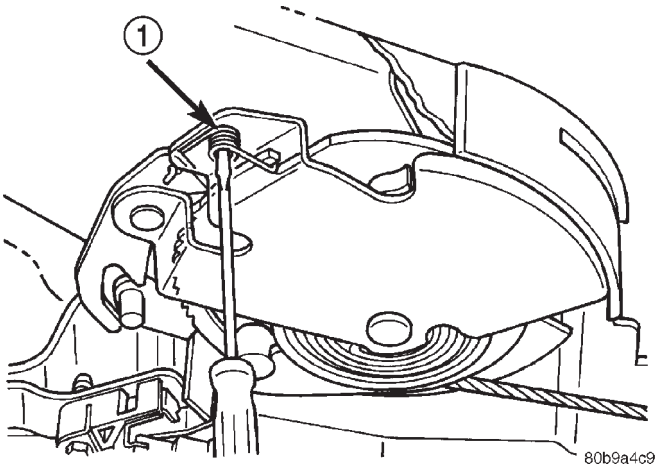

Fig. 71 Lock Out Spring

1 - LOCK OUT SPRING

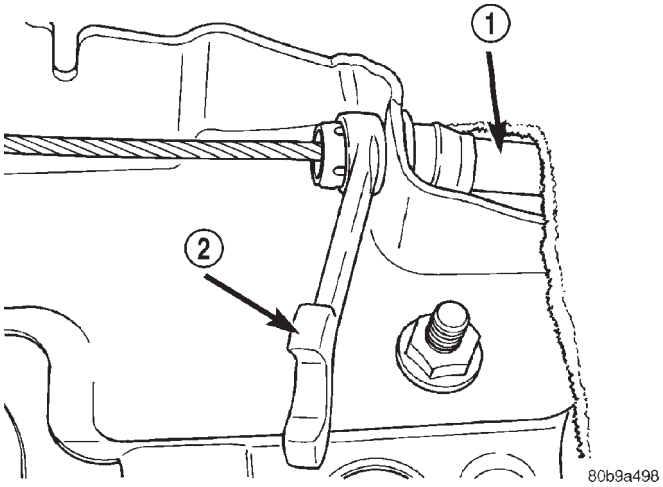

Fig. 72 Parking Brake Lever Bracket

1 - FRONT CABLE
2 - WRENCH

INSTALLATION

(1) Install the lever assembly on the mounting studs while feeding the front cable into the lever bracket.

(2) Install the console bracket (Fig. 73) and mounting nuts.

(3) Engage the front cable end to the lever.

(4) Connect parking brake switch wire connector.

(5) Pull on the lever to release the lock out spring.

(6) Install center console,(Refer to 23 - BODY/INTERIOR/FLOOR CONSOLE - INSTALLATION).

(7) Fold down the rear carpet cover and rear seat.

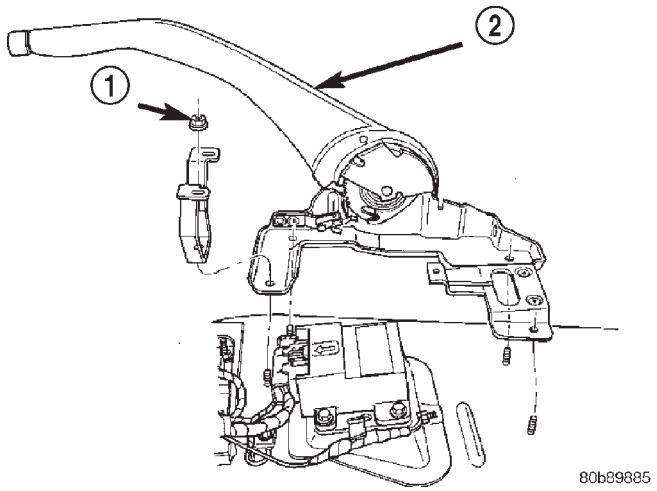

Fig. 73 Parking Brake Lever Mounting

1 - MOUNTING NUT
2 - PARK BRAKE LEVER

SHOES

REMOVAL

(1) Lock out park brake lever (Fig. 74).

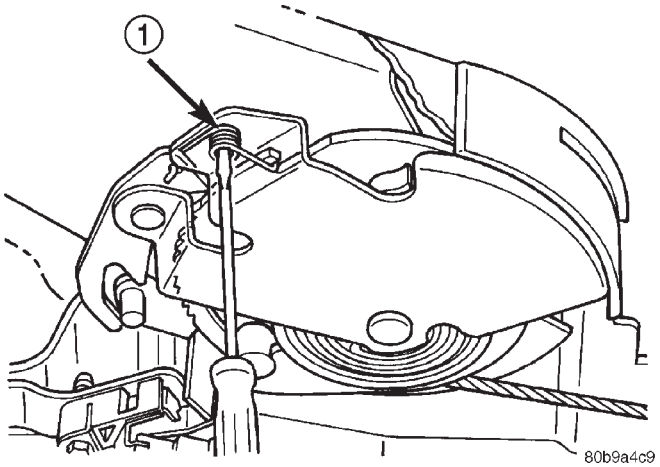

Fig. 74 Lock Out Spring

1 - LOCK OUT SPRING

(2) Raise vehicle.

(3) Remove rear wheel and tire assembly.

(4) Remove caliper and anchor as an assembly.

(5) Remove rubber access plug from back of rear disc brake splash shield.

(6) If necessary retract parking brake shoes with brake adjuster tool (Fig. 75). Position tool at top of star wheel and rotate wheel.

(7) Remove rotor from axle hub flange.

(8) Remove the lower shoe to shoe spring/adjuster spring with needle nose pliers (Fig. 76).

SHOES (Continued)

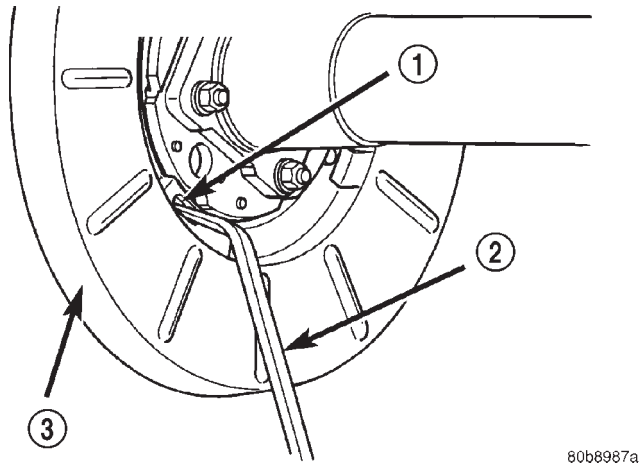

Fig. 75 Retracting Parking Brake Shoes

1 - ACCESS HOLE
2 - BRAKE ADJUSTING TOOL
3 - SPLASH SHIELD

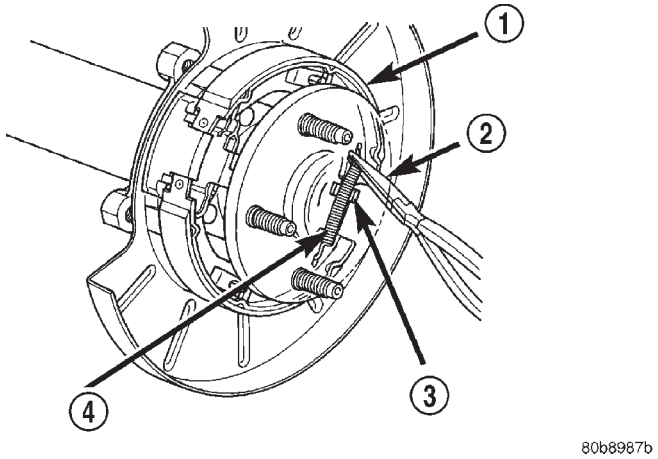

Fig. 76 Lower Spring

1 - REAR SHOE
2 - NEEDLENOSE PLIERS
3 - ADJUSTER SCREW
4 - LOWER SPRING

(9) Remove the upper shoe to shoe spring/return spring with brake pliers (Fig. 77).

(10) Remove shoe hold-down clips and pins (Fig. 78). Clip is held in place by pin which fits in clip notch. To remove clip, first push clip ends together and slide clip until head of pin clears narrow part of notch. Then remove clip and pin.

(11) Remove shoes and adjuster.

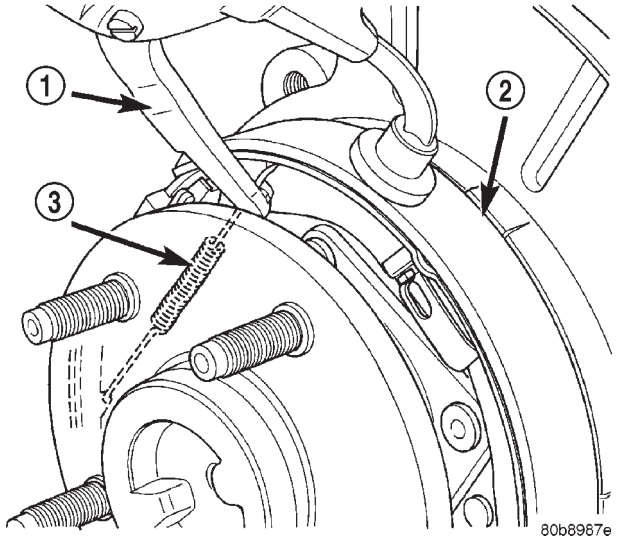

Fig. 77 Upper Spring

1 - BRAKE PLIERS
2 - REAR SHOE
3 - UPPER SPRING

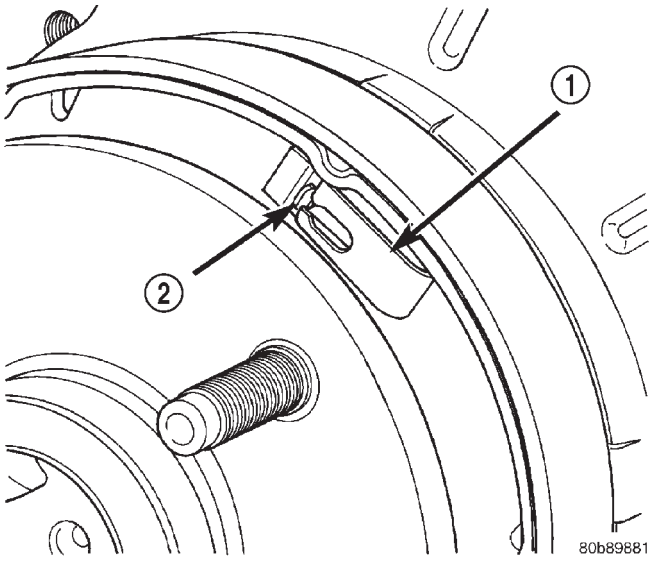

Fig. 78 Hold-Down Clip And Pin

1 - HOLD-DOWN CLIP
2 - HOLD-DOWN PIN

SHOES (Continued)

INSTALLATION

(1) Install shoes on splash shield with hold down clips and pins. Be sure shoes are properly engaged in the park brake actuator.

(2) Lubricate and install adjuster screw assembly. Be sure notched ends of screw assembly are properly seated on shoes and that star wheel is aligned with access hole in shield.

(3) Install lower shoe to shoe spring/adjuster spring. Needle nose pliers can be used to connect spring to each shoe.

(4) Install the upper shoe to shoe spring/return spring with brake pliers (Fig. 76).

(5) Install rotor and caliper anchor assembly.

(6) Install anchor bolts and tighten to 90-115 N·m (66-85 ft. lbs.).

(7) Actuate park brake lever to unlock the park brake system.

(8) Adjust the parking brake shoes (Fig. 75).

(9) Install wheel and tire assembly.

(10) Lower vehicle and verify correct parking brake operation.

ADJUSTMENTS - PARKING BRAKE SHOE

(1) Remove wheel and tire assemblies.

(2) Secure rotor with two wheel nuts.

(3) Remove rubber access plug from back of splash shield.

(4) Insert brake tool through access hole in splash shield (Fig. 79). Position tool at bottom of star wheel.

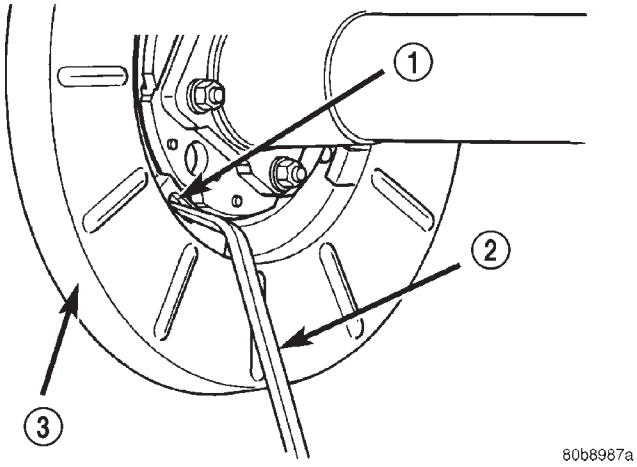

Fig. 79 Park Brake Shoe Adjustment

1 - ACCESS HOLE
2 - BRAKE ADJUSTING TOOL
3 - SPLASH SHIELD

(5) Rotate star wheel upward direction to expand shoes (while facing front of vehicle).

(6) Expand shoes until light drag is experienced. Then back off adjuster screw only enough to eliminate drag.

(7) Install plug in splash shield access hole.

(8) Install wheel and tire assemblies.

BRAKES - ABS

TABLE OF CONTENTS

page

BRAKES - ABS
DESCRIPTION 36
OPERATION. 36
DIAGNOSIS AND TESTING 37
ANTILOCK BRAKES 37
STANDARD PROCEDURE 37
BLEEDING ABS BRAKE SYSTEM. 37
SPECIFICATIONS 37
ELECTRIC BRAKE
DESCRIPTION 38
OPERATION. 38
FRONT WHEEL SPEED SENSOR
DESCRIPTION 38
OPERATION. 38
REMOVAL 38
INSTALLATION. 38

page

G-SWITCH
DESCRIPTION 39
OPERATION. 39
REMOVAL 39
INSTALLATION. 39
REAR WHEEL SPEED SENSOR
DESCRIPTION 40
OPERATION. 40
REMOVAL 40
INSTALLATION. 41
HCU (HYDRAULIC CONTROL UNIT)
DESCRIPTION 41
OPERATION. 41
REMOVAL 42
INSTALLATION. 42

BRAKES - ABS

DESCRIPTION

The purpose of the antilock system is to prevent wheel lockup during periods of high wheel slip. Preventing lockup helps maintain vehicle braking action and steering control.

The hydraulic system is a three channel design. The front brakes are controlled individually and the rear brakes in tandem.

The ABS electrical system is separate from other vehicle electrical circuits. A separate controller operates the system.

OPERATION

The antilock CAB activates the system whenever sensor signals indicate periods of high wheel slip. High wheel slip can be described as the point where wheel rotation begins approaching 20 to 30 percent of actual vehicle speed during braking. Periods of high wheel slip occur when brake stops involve high pedal pressure and rate of vehicle deceleration.

Battery voltage is supplied to the CAB ignition terminal when the ignition switch is turned to Run position. The CAB performs a system initialization procedure at this point. Initialization consists of a static and dynamic self check of system electrical components.

The static check occurs after the ignition switch is turned to Run position. The dynamic check occurs when vehicle road speed reaches approximately 30 kph (18 mph). During the dynamic check, the CAB briefly cycles the pump and solenoids to verify operation.

If an ABS component exhibits a fault during initialization, the CAB illuminates the amber warning light and registers a fault code in the microprocessor memory.

ANTILOCK BRAKING

The antilock system prevents lockup during high slip conditions by modulating fluid apply pressure to the wheel brake units.

Brake fluid apply pressure is modulated according to wheel speed, degree of slip and rate of deceleration. A sensor at each wheel converts wheel speed into electrical signals. These signals are transmitted to the CAB for processing and determination of wheel slip and deceleration rate.

The ABS system has three fluid pressure control channels. The front brakes are controlled separately and the rear brakes in tandem. A speed sensor input signal indicating a high slip condition activates the CAB antilock program.

Two solenoid valves are used in each antilock control channel. The valves are all located within the HCU valve body and work in pairs to either increase, hold, or decrease apply pressure as needed in the individual control channels.

The solenoid valves are not static during antilock braking. They are cycled continuously to modulate pressure. Solenoid cycle time in antilock mode can be measured in milliseconds.

BRAKES - ABS (Continued)

DIAGNOSIS AND TESTING - ANTILOCK BRAKES

The ABS brake system performs several self-tests every time the ignition switch is turned on and the vehicle is driven. The CAB monitors the systems input and output circuits to verify the system is operating correctly. If the on board diagnostic system senses that a circuit is malfunctioning the system will set a trouble code in its memory.

NOTE: An audible noise may be heard during the self-test. This noise should be considered normal.

NOTE: The MDS or DRB III scan tool is used to diagnose the ABS system. For additional information refer to the Electrical section. For test procedures refer to the Chassis Diagnostic Manual.

STANDARD PROCEDURES - BLEEDING ABS BRAKE SYSTEM

ABS system bleeding requires conventional bleeding methods plus use of the DRB scan tool. The procedure involves performing a base brake bleeding, followed by use of the scan tool to cycle and bleed the HCU pump and solenoids. A second base brake bleeding procedure is then required to remove any air remaining in the system.

(1) Perform base brake bleeding. (Refer to 5 - BRAKES - STANDARD PROCEDURE) OR (Refer to 5 - BRAKES - STANDARD PROCEDURE).

(2) Connect scan tool to the Data Link Connector.

(3) Select ANTILOCK BRAKES, followed by MISCELLANEOUS, then ABS BRAKES. Follow the instructions displayed. When scan tool displays TEST COMPLETE, disconnect scan tool and proceed.

(4) Perform base brake bleeding a second time. (Refer to 5 - BRAKES - STANDARD PROCEDURE) OR (Refer to 5 - BRAKES - STANDARD PROCEDURE).

(5) Top off master cylinder fluid level and verify proper brake operation before moving vehicle.

SPECIFICATIONS

TORQUE CHART

TORQUE SPECIFICATIONS

DESCRIPTION	N·m	Ft. Lbs.	In. Lbs.
G-Sensor Bolt	5.6		50
Hydraulic Control Unit/Controller Antilock Brakes Mounting Bolts	12	9	
Hydraulic Control Unit/Controller Antilock Brakes Brake Lines	16		144
Hydraulic Control Unit/Controller Antilock Brakes CAB Screws	1.8		16
Wheel Speed Sensors Front Sensor Bolt	12-14	106-124	
Wheel Speed Sensors Rear Sensor Bolt	12-14	106-124	

ELECTRIC BRAKE

DESCRIPTION

The electronic brake distribution (EBD) functions like a rear proportioning valve. The EBD system uses the ABS system to control the slip of the rear wheels in partial braking range. The braking force of the rear wheels is controlled electronically by using the inlet and outlet valves located in the HCU.

OPERATION

Upon entry into EBD the inlet valve for the rear brake circuit is switched on so that the fluid supply from the master cylinder is shut off. In order to decrease the rear brake pressure the outlet valve for the rear brake circuit is pulsed. This allows fluid to enter the low pressure accumulator (LPA) in the HCU resulting in a drop in fluid pressure to the rear brakes. In order to increase the rear brake pressure the outlet valve is switched off and the inlet valve is pulsed. This increases the pressure to the rear brakes. This will continue until the required slip difference is obtained. At the end of EBD braking (no brake application) the fluid in the LPA drains back to the master cylinder by switching on the outlet valve and draining through the inlet valve check valve. At the same time the inlet valve is switched on to prevent a hydraulic short circiut in case of another brake application.

The EBD will remain functional during many ABS fault modes. If the red and amber warning lamps are illuminated the EBD may have a fault.

FRONT WHEEL SPEED SENSOR

DESCRIPTION

A wheel speed sensor is used at each wheel. The front sensors are mounted to the steering knuckles. The rear sensors are mounted at the outboard end of the axle. Tone wheels are mounted to the outboard ends of the front and rear axle shafts. The gear type tone wheel serves as the trigger mechanism for each sensor.

OPERATION

The sensors convert wheel speed into a small digital signal. The CAB sends 12 volts to the sensors. The sensor has an internal magneto resistance bridge that alters the voltage and amperage of the signal circuit. This voltage and amperage is changed by magnetic induction when the toothed tone wheel passes the wheel speed sensor. This digital signal is sent to the CAB. The CAB measures the voltage and amperage of the digital signal for each wheel.

REMOVAL

(1) Raise and support the vehicle.

(2) Remove the front wheel sensor mounting bolt (Fig. 1).

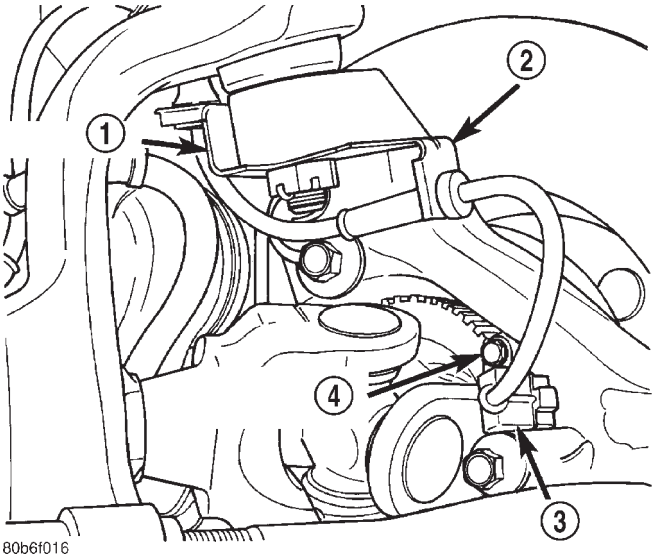

Fig. 1 Sensor Location

1 - BRACKET
2 - BRACKET
3 - WHEEL SPEED SENSOR
4 - MOUNTING BOLT

(3) Remove the sensor from the steering knuckle.

(4) Disengage the sensor wire from the brackets (Fig. 1) on the steering knuckle.

(5) Disconnect the sensor from the sensor harness (Fig. 2) and (Fig. 3).

(6) Remove the sensor and wire.

INSTALLATION

(1) Install the sensor on the steering knuckle.

(2) Apply Mopar Lock N' Seal or Loctite® 242 to the sensor mounting bolt. Use new sensor bolt if original bolt is worn or damaged.

(3) Install the sensor mounting bolt and tighten bolt to 12-14 N·m (106-124 in. lbs.).

(4) Engage the grommets on the sensor wire to the steering knuckle brackets.

(5) Connect the sensor wire to the harness connector.

(6) Check the sensor wire routing. Be sure the wire is clear of all chassis components and is not twisted or kinked at any spot.

(7) Remove the support and lower vehicle.

G-SWITCH (Continued)

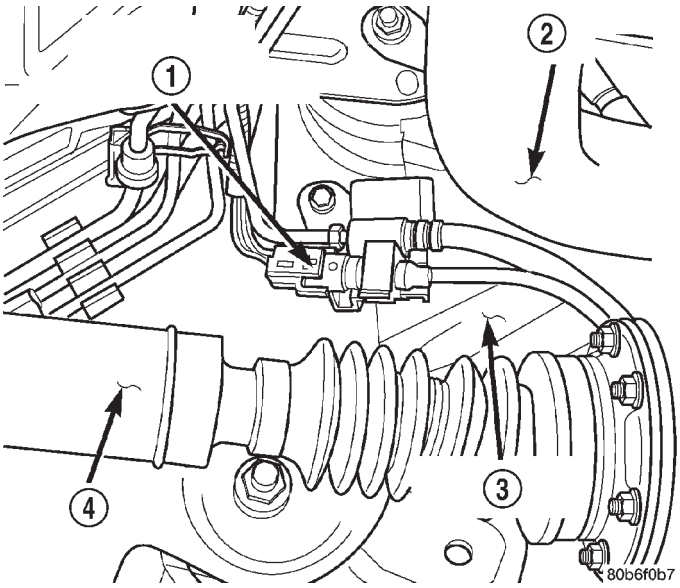

Fig. 2 Left Sensor Connector

1 - LEFT FRONT WHEEL SPEED SENSOR CONNECTOR
2 - ENGINE EXHAUST PIPE
3 - LEFT FRONT FRAME RAIL
4 - FRONT DRIVESHAFT

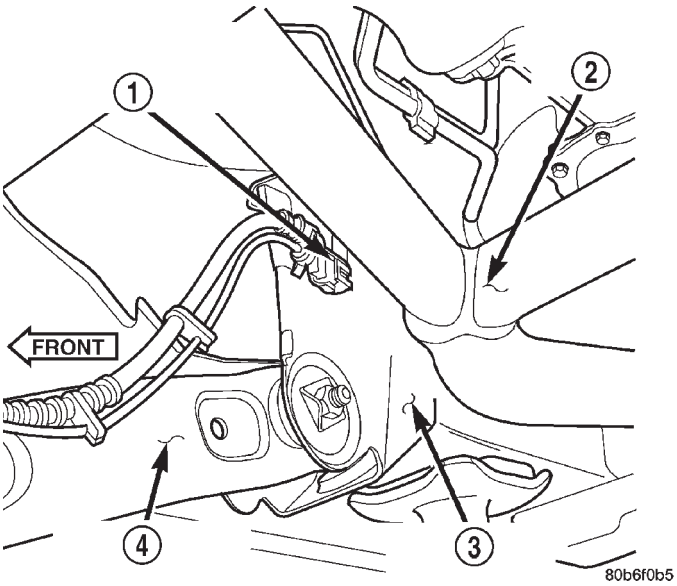

Fig. 3 Right Sensor Connector

1 - RIGHT FRONT WHEEL SPEED SENSOR CONNECTOR
2 - ENGINE EXHAUST Y-PIPE
3 - RIGHT FRONT FRAME RAIL
4 - RIGHT LOWER SUSPENSION ARM

G-SWITCH

DESCRIPTION

The G-switch (Fig. 4) is located under the rear seat. The switch has directional arrow and must be mounted with the arrow pointing towards the front of the vehicle.

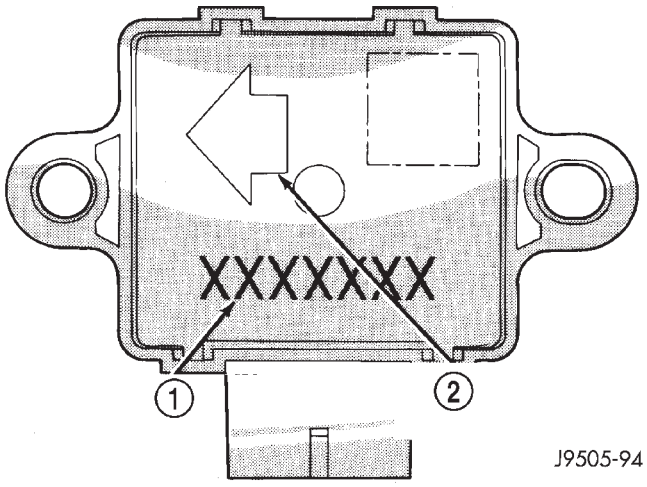

Fig. 4 G-Switch

1 - SWITCH PART NUMBER
2 - ARROW INDICATES FRONT OF SWITCH FOR PROPER MOUNTING

OPERATION

The switch is monitored by the CAB at all times. The switch contains three mercury switches which monitor vehicle deceleration rates (G-force). Sudden changes in deceleration rates trigger the switch, sending a signal to the CAB.

REMOVAL

(1) Fold the rear seat bottom assembly up for access to the switch.

(2) Lift up the carpeting and disconnect the switch harness (Fig. 5).

(3) Remove the switch mounting bolts and remove the switch.

INSTALLATION

CAUTION: The mercury switch (inside the G-Switch), will not function properly if the switch is installed incorrectly. Verify that the switch locating arrow is pointing to the front of the vehicle (Fig. 6).

G-SWITCH (Continued)

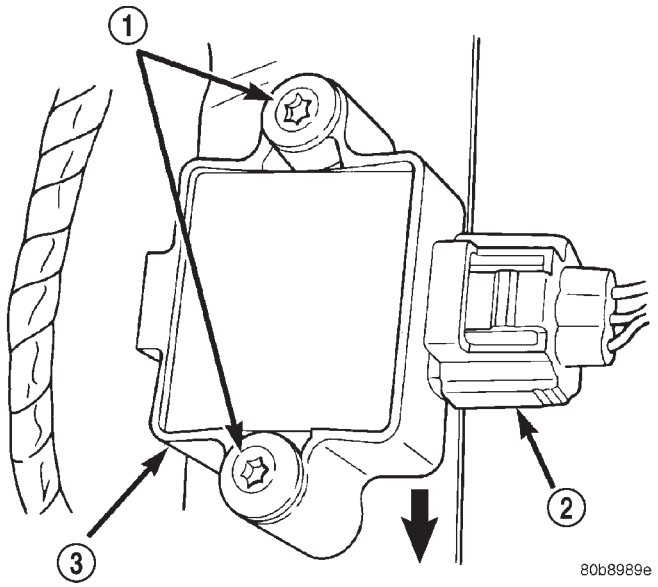

Fig. 5 G-Switch Mounting

1 - MOUNTING BOLTS
2 - CONNECTOR
3 - G-SWITCH

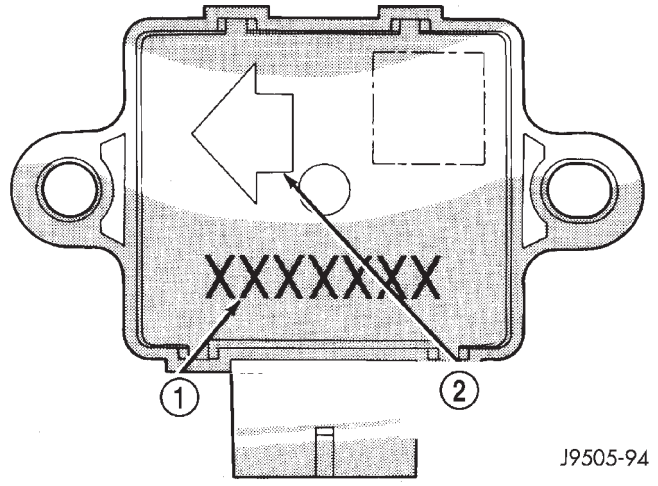

Fig. 6 G-Switch

1 - SWITCH PART NUMBER
2 - ARROW INDICATES FRONT OF SWITCH FOR PROPER MOUNTING

(1) Note the position of the locating arrow on the switch. Position the switch so the arrow faces forward.

(2) Install the switch and tighten the mounting bolts to 5.6 N·m (50 in. lbs.).

(3) Connect the harness to the switch. Be sure the harness connector is firmly seated.

(4) Place the carpet in position and fold the rear seat back down.

REAR WHEEL SPEED SENSOR

DESCRIPTION

A wheel speed sensor is used at each wheel. The front sensors are mounted to the steering knuckles. The rear sensors are mounted at the outboard end of the axle. Tone wheels are mounted to the outboard ends of the front and rear axle shafts. The gear type tone wheel serves as the trigger mechanism for each sensor.

OPERATION

The sensors convert wheel speed into a small digital signal. The CAB sends 12 volts to the sensors. The sensor has an internal magneto resistance bridge that alters the voltage and amperage of the signal circuit. This voltage and amperage is changed by magnetic induction when the toothed tone wheel passes the wheel speed sensor. This digital signal is sent to the CAB. The CAB measures the voltage and amperage of the digital signal for each wheel.

REMOVAL

(1) Raise and fold the rear seat forward. Then move the carpeting aside for access to the rear sensor connectors.

(2) Disconnect the rear sensor wire at the harness connectors (Fig. 7).

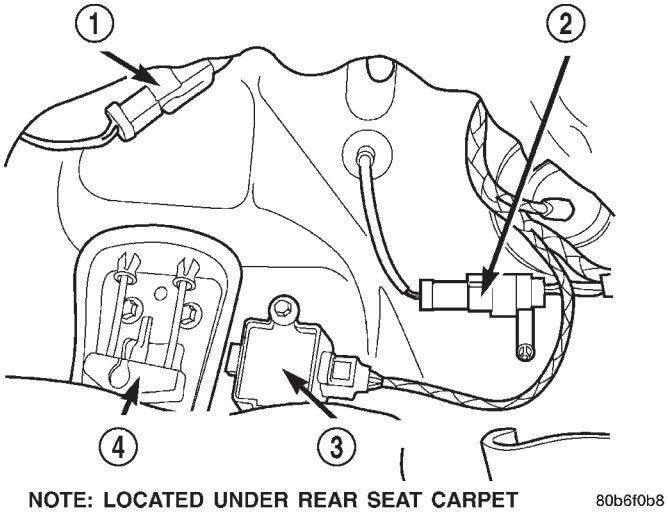

Fig. 7 Rear Sensor Connector

1 - RIGHT REAR WHEEL SPEED SENSOR CONNECTOR
2 - LEFT REAR WHEEL SPEED SENSOR CONNECTOR
3 - G-SWITCH SENSOR
4 - PARKING BRAKE CABLES

(3) Push the sensor wires and grommets through the floorpan holes.

(4) Raise and support the vehicle.

REAR WHEEL SPEED SENSOR (Continued)

(5) Disengage the sensor wire from the axle and the chassis brackets and from the brake line retainers.

(6) Remove the sensor mounting bolt from the rear brake backing plate. (Fig. 8).

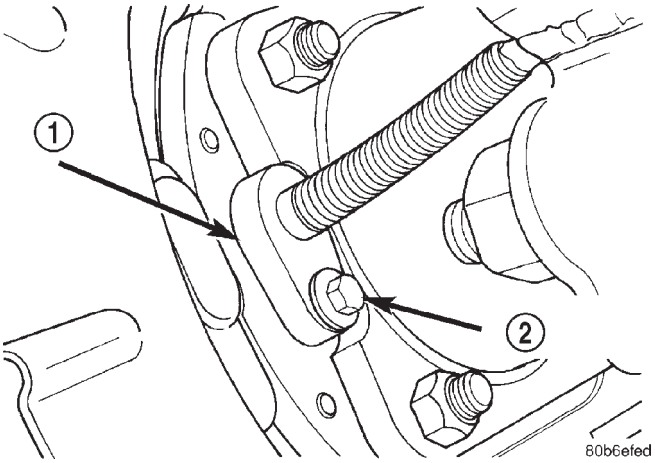

Fig. 8 Sensor Mounting Bolt

1 - WHEEL SPEED SENSOR
2 - MOUNTING BOLT

(7) Remove the sensor from the backing plate.

INSTALLATION

(1) Insert the sensor through the backing plate (Fig. 9).

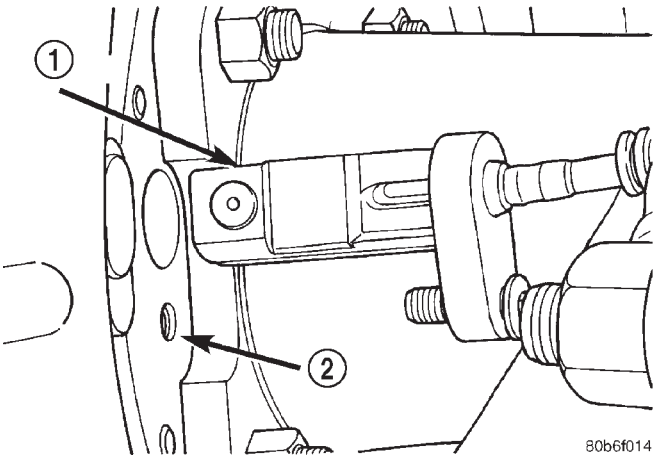

Fig. 9 Wheel Speed Sensor

1 - WHEEL SPEED SENSOR
2 - BACKING PLATE

(2) Apply Mopar Lock N' Seal or Loctite 242® to the original sensor bolt. Use a new bolt if the original is worn or damaged.

(3) Tighten the sensor bolt to 12-14 N·m (106-124 in. lbs.).

(4) Secure the sensor wire in the brackets and the retainers on the rear brake lines. Verify that the sensor wire is secure and clear of the rotating components.

(5) Route the sensor wires to the rear seat area.

(6) Feed the sensor wires the through floorpan access hole and seat the sensor grommets into the floorpan.

(7) Remove the support and lower the vehicle.

(8) Fold the rear seat and carpet forward for access to the sensor wires and connectors.

(9) Connect the sensor wires to the harness connectors.

(10) Reposition the carpet and fold the rear seat down.

HCU (HYDRAULIC CONTROL UNIT)

DESCRIPTION

The HCU consists of a valve body, pump motor, and wire harness.

OPERATION

Accumulators in the valve body store extra fluid released to the system for ABS mode operation. The pump is used to clear the accumulator of brake fluid and is operated by a DC type motor. The motor is controlled by the CAB.

The valves modulate brake pressure during antilock braking and are controlled by the CAB.

The HCU provides three channel pressure control to the front and rear brakes. One channel controls the rear wheel brakes in tandem. The two remaining channels control the front wheel brakes individually.

During antilock braking, the solenoid valves are opened and closed as needed. The valves are not static. They are cycled rapidly and continuously to modulate pressure and control wheel slip and deceleration.

During normal braking, the HCU solenoid valves and pump are not activated. The master cylinder and power booster operate the same as a vehicle without an ABS brake system.

During antilock braking, solenoid valve pressure modulation occurs in three stages, pressure increase, pressure hold, and pressure decrease. The valves are all contained in the valve body portion of the HCU.

PRESSURE DECREASE

The outlet valve is opened and the inlet valve is closed during the pressure decrease cycle.

A pressure decrease cycle is initiated when speed sensor signals indicate high wheel slip at one or more wheels. At this point, the CAB closes the inlet

HCU (HYDRAULIC CONTROL UNIT) (Continued)

then opens the outlet valve, which also opens the return circuit to the accumulators. Fluid pressure is allowed to bleed off (decrease) as needed to prevent wheel lock.

Once the period of high wheel slip has ended, the CAB closes the outlet valve and begins a pressure increase or hold cycle as needed.

PRESSURE HOLD

Both solenoid valves are closed in the pressure hold cycle. Fluid apply pressure in the control channel is maintained at a constant rate. The CAB maintains the hold cycle until sensor inputs indicate a pressure change is necessary.

PRESSURE INCREASE

The inlet valve is open and the outlet valve is closed during the pressure increase cycle. The pressure increase cycle is used to counteract unequal wheel speeds. This cycle controls re-application of fluid apply pressure due to changing road surfaces or wheel speed.

REMOVAL

(1) Remove the negative battery cable from the battery.

(2) Remove the air cleaner housing, (Refer to 9 - ENGINE/AIR INTAKE SYSTEM/AIR CLEANER HOUSING - REMOVAL).

(3) Pull the CAB harness connector release up and remove connector (Fig. 10).

(4) Remove the brake lines from the HCU.

(5) Remove the HCU/CAB side mounting bolt and the two rear mounting bolts. (Fig. 11).

(6) Remove the HCU/CAB assembly from the vehicle.

INSTALLATION

(1) Install HCU/CAB assembly into the mounting bracket and tighten mounting bolts to 12 N·m (9 ft. lbs.).

(2) Install the brake lines to the HCU and tighten to 16 N·m (12 ft. lbs.).

(3) Install CAB harness connector and push down connector release.

(4) Install air cleaner housing, (Refer to 9 - ENGINE/AIR INTAKE SYSTEM/AIR CLEANER HOUSING - INSTALLATION).

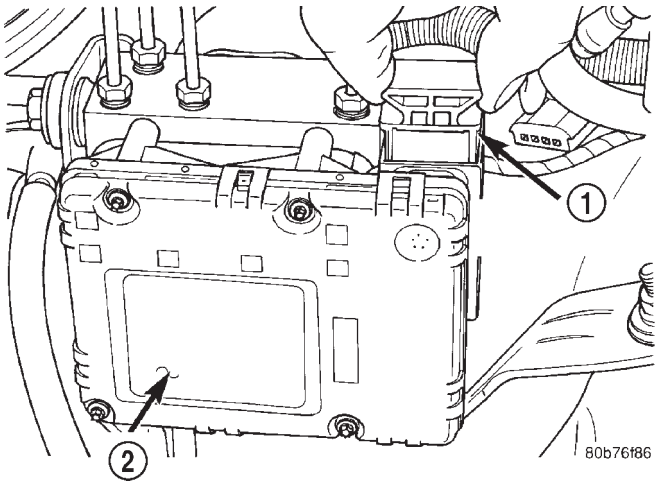

Fig. 10 CAB Connector Release

1 - CONNECTOR RELEASE
2 - CAB

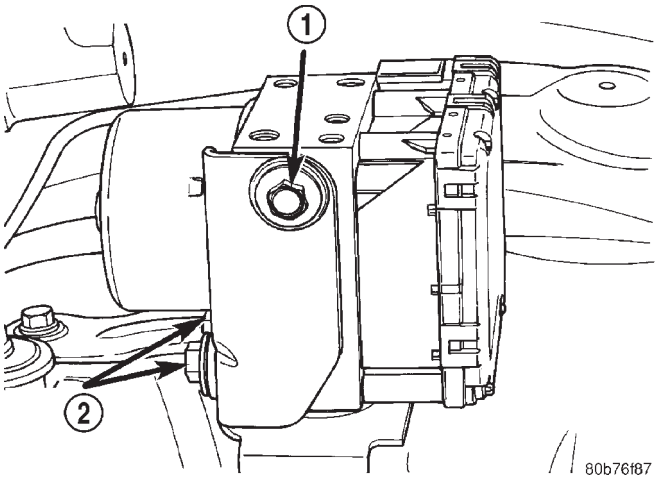

Fig. 11 HCU/CAB Assembly

1 - SIDE MOUNTING BOLT
2 - REAR MOUNTING BOLTS

(5) Install negative battery cable to the battery.

(6) Bleed base and ABS brake systems,(Refer to 5 - BRAKES - STANDARD PROCEDURE) OR (Refer to 5 - BRAKES - STANDARD PROCEDURE).

COOLING

TABLE OF CONTENTS

page

COOLING
DESCRIPTION 1
OPERATION 4
DIAGNOSIS AND TESTING 4
ON-BOARD DIAGNOSTICS (OBD) 4
PRELIMINARY CHECKS. 4
COOLING SYSTEM DIAGNOSIS CHART 5
COOLING SYSTEM - TESTING FOR LEAKS . . 12
COOLING SYSTEM - DEAERATION 13
STANDARD PROCEDURE 13
DRAINING COOLING SYSTEM - 4.7L. 13
REFILLING COOLING SYSTEM - 4.7L 14
DRAINING COOLING SYSTEM - 4.0L. 14
REFILLING COOLING SYSTEM - 4.0L 15
COOLING SYSTEM - REVERSE FLUSHING. . . 15
SPECIFICATIONS 16
SPECIAL TOOLS 16
ACCESSORY DRIVE 17
ENGINE 25
TRANSMISSION 55

COOLING

DESCRIPTION - COOLING SYSTEM 4.7L ENGINE

The cooling system consists of the following items:

- Hydraulic cooling fan and fan drive assembly
- Radiator
- Power steering oil cooler
- In-line hydraulic fluid filter
- Radiator pressure cap
- Thermostat
- Coolant reserve/overflow system
- Transmission oil cooler (if equipped with an automatic transmission)
- Coolant
- Water pump
- Hoses and hose clamps

DESCRIPTION—COOLING SYSTEM ROUTING 4.7L ENGINE

For cooling system routing refer to (Fig. 1).

COOLING (Continued)

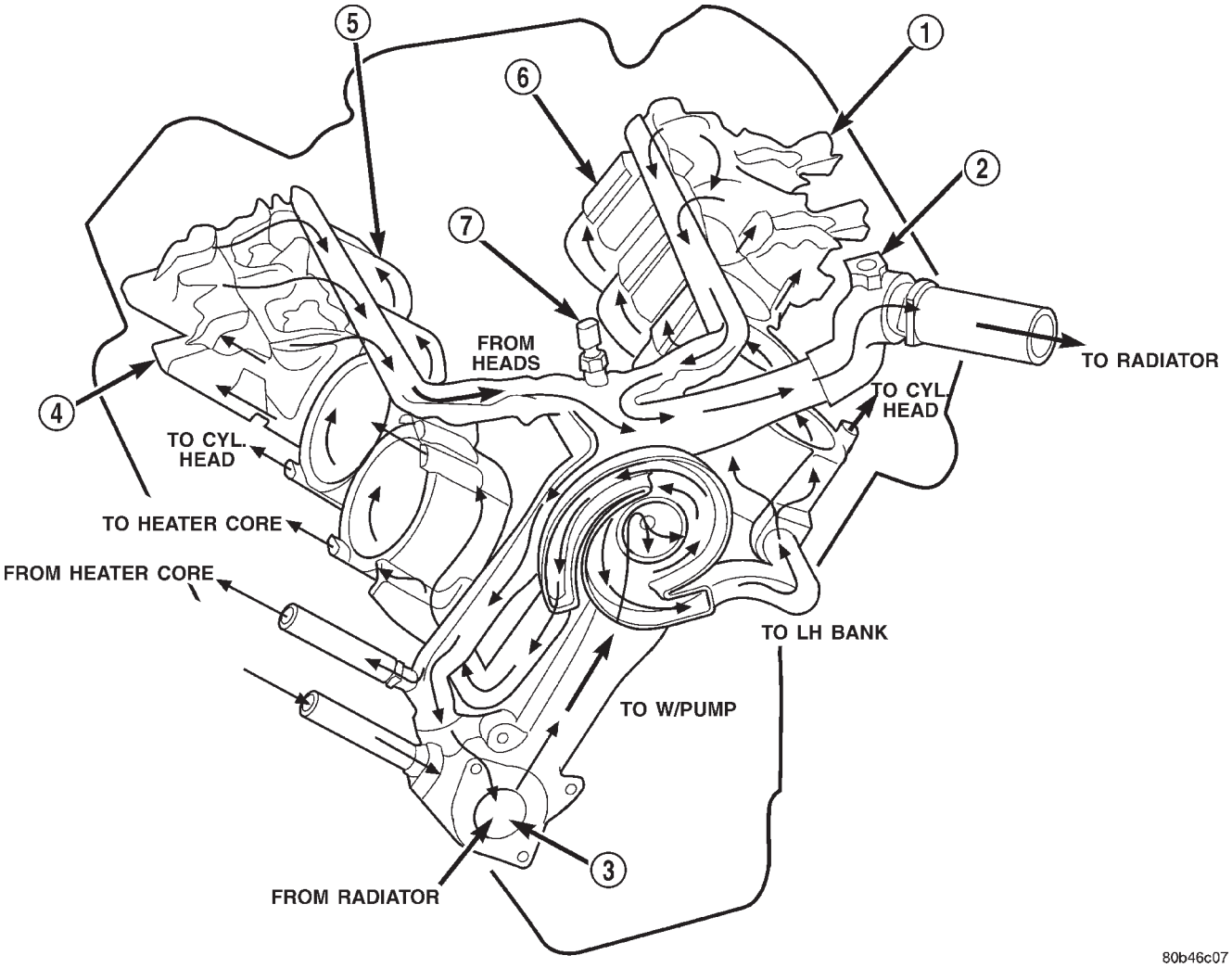

Fig. 1 Engine Cooling System 4.7L Engine

1 - LH CYL. HEAD
2 - BLEED
3 - THERMOSTAT LOCATION
4 - RH CYL. HEAD
5 - RH BANK CYL. BLOCK
6 - LH BANK CYL. BLOCK
7 - COOLANT TEMP. SENSOR

COOLING (Continued)

DESCRIPTION—COOLING SYSTEM 4.0L ENGINE

The cooling system consists of:

- A radiator
- Mechanical Cooling Fan
- Thermal viscous fan drive-Low disengaged
- Fan shroud (Fig. 2)
- Radiator pressure cap
- Thermostat
- Coolant reserve/overflow system
- Transmission oil cooler (if equipped with an automatic transmission)
- Coolant
- Water pump
- Hoses and hose clamps
- Accessory drive belt

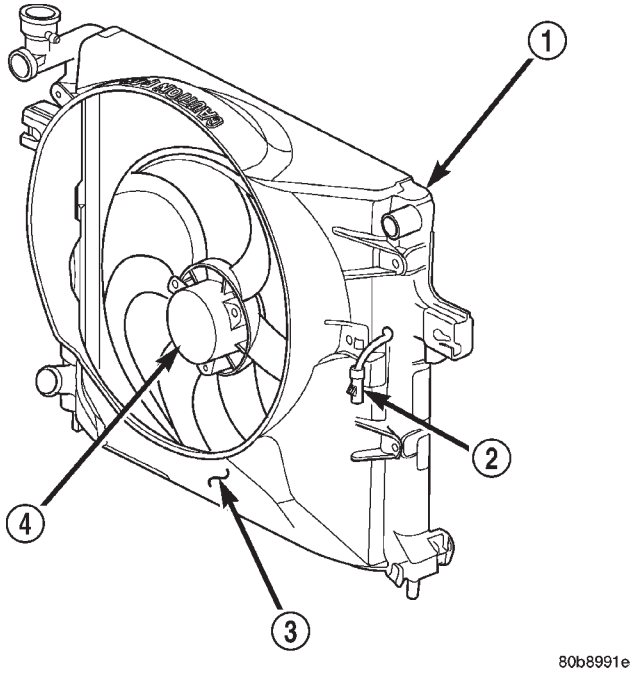

Fig. 2 Cooling Module with Electric Fan

1 - RADIATOR
2 - ELECTRIC COOLING FAN CONNECTOR
3 - FAN SHROUD
4 - ELECTRIC COOLING FAN

DESCRIPTION—COOLING SYSTEM ROUTING 4.0L ENGINE

For cooling system routing refer to (Fig. 3).

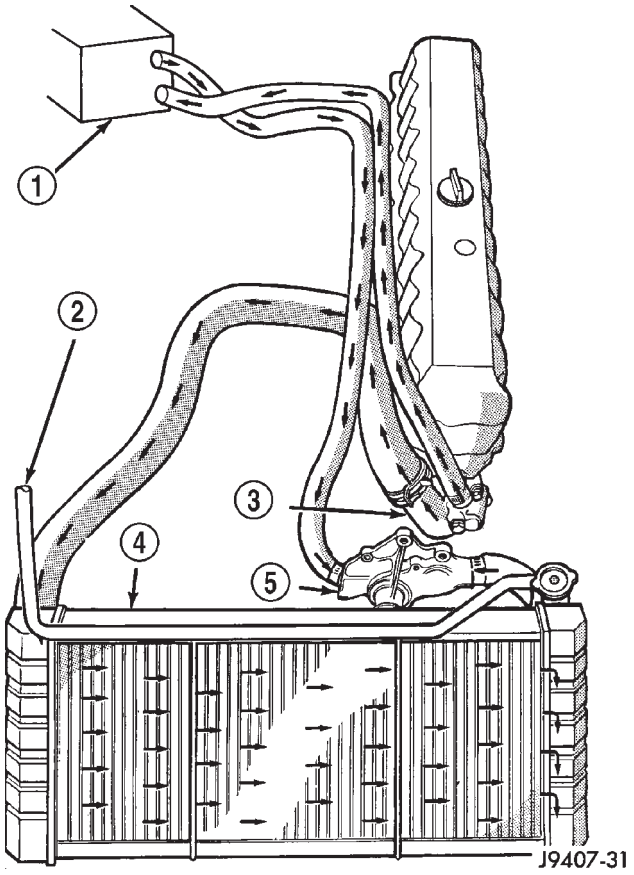

Fig. 3 Engine Cooling System—4.0L Engine—Typical

1 - HEATER CORE
2 - TO COOLANT RESERVE/OVERFLOW TANK
3 - THERMOSTAT HOUSING
4 - RADIATOR
5 - WATER PUMP

DESCRIPTION—HOSE CLAMPS

The cooling system utilizes both worm drive and spring type hose clamps. If a spring type clamp replacement is necessary, replace with the original Mopar® equipment spring type clamp.

COOLING (Continued)

CAUTION: A number or letter is stamped into the tongue of constant tension clamps. If replacement is necessary, use only a original equipment clamp with matching number or letter (Fig. 4).

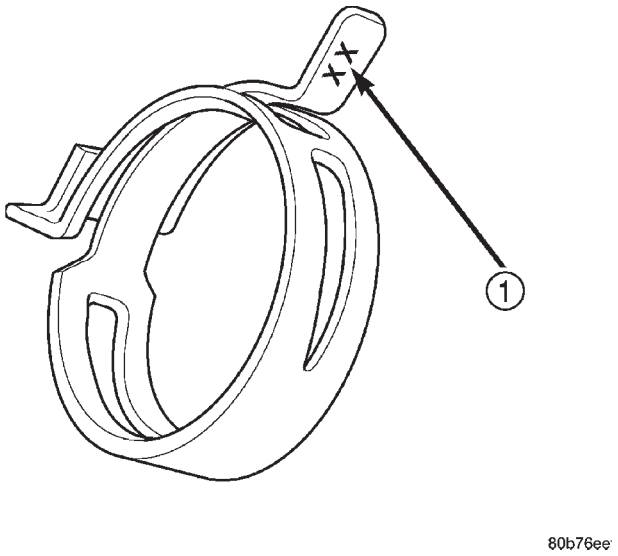

Fig. 4 Spring Clamp Size Location

1 - SPRING CLAMP SIZE LOCATION

OPERATION—COOLING SYSTEM

The cooling system regulates engine operating temperature. It allows the engine to reach normal operating temperature as quickly as possible. It also maintains normal operating temperature and prevents overheating.

The cooling system also provides a means of heating the passenger compartment and cooling the automatic transmission fluid (if equipped). The cooling system is pressurized and uses a centrifugal water pump to circulate coolant throughout the system.

OPERATION—HOSE CLAMPS

The worm type hose clamp uses a specified torque value to maintain proper tension on a hose connection.

The spring type hose clamp applies constant tension on a hose connection. To remove a spring type hose clamp, only use constant tension clamp pliers designed to compress the hose clamp.

DIAGNOSIS AND TESTING—ON-BOARD DIAGNOSTICS (OBD)

COOLING SYSTEM RELATED DIAGNOSTICS

The powertrain control module (PCM) has been programmed to monitor certain cooling system components:

- If the engine has remained cool for too long a period, such as with a stuck open thermostat, a Diagnostic Trouble Code (DTC) can be set.
- If an open or shorted condition has developed in the relay circuit controlling the electric radiator fan or fan control solenoid circuit controling the hydraulic fan, a Diagnostic Trouble Code (DTC) can be set.

If the problem is sensed in a monitored circuit often enough to indicated an actual problem, a DTC is stored. The DTC will be stored in the PCM memory for eventual display to the service technician. (Refer to 25 - EMISSIONS CONTROL - DESCRIPTION).

ACCESSING DIAGNOSTIC TROUBLE CODES

To read DTC's and to obtain cooling system data, (Refer to 25 - EMISSIONS CONTROL - DESCRIPTION).

ERASING TROUBLE CODES

After the problem has been repaired, use the DRB scan tool to erase a DTC. Refer to the appropriate Powertrain Diagnostic Procedures service information for operation of the DRB scan tool.

DIAGNOSIS AND TESTING—PRELIMINARY CHECKS

ENGINE COOLING SYSTEM OVERHEATING

Establish what driving conditions caused the complaint. Abnormal loads on the cooling system such as the following may be the cause:

- PROLONGED IDLE
- VERY HIGH AMBIENT TEMPERATURE
- SLIGHT TAIL WIND AT IDLE
- SLOW TRAFFIC
- TRAFFIC JAMS
- HIGH SPEED
- STEEP GRADES

Driving techniques that avoid overheating are:

- Idle with A/C off when temperature gauge is at end of normal range.
- Increase engine speed for more air flow is recommended.

(1) TRAILER TOWING:

Consult Trailer Towing section of owners manual. Do not exceed limits.

(2) AIR CONDITIONING; ADD-ON OR AFTER MARKET:

A maximum cooling package should have been ordered with vehicle if add-on or after market A/C is installed. If not, maximum cooling system components should be installed for model involved per manufacturer's specifications.

(3) RECENT SERVICE OR ACCIDENT REPAIR:

COOLING (Continued)

Determine if any recent service has been performed on vehicle that may effect cooling system. This may be:

- Engine adjustments (incorrect timing)
- Slipping engine accessory drive belt(s)
- Brakes (possibly dragging)
- Changed parts. Incorrect water pump, or pump rotating in wrong direction due to belt not correctly routed
- Reconditioned radiator or cooling system refilling (possibly under filled or air trapped in system).

NOTE: If investigation reveals none of the previous items as a cause for an engine overheating complaint, refer to following Cooling System Diagnosis charts.

These charts are to be used as a quick-reference only. Refer to the group text for information.

DIAGNOSIS AND TESTING—COOLING SYSTEM DIAGNOSIS CHART

COOLING SYSTEM DIAGNOSIS CHART

CONDITION	POSSIBLE CAUSES	CORRECTION
TEMPERATURE GAUGE READS LOW	1. Has a Diagnostic Trouble Code (DTC) been set indicating a stuck open thermostat?	1. Refer to (Refer to 25 - EMISSIONS CONTROL - DESCRIPTION) for On-Board Diagnostics and DTC information. Replace thermostat if necessary.
	2. Is the temperature sending unit connected?	2. Check the temperature sensor connector. (Refer to 7 - COOLING/ ENGINE/ENGINE COOLANT TEMP SENSOR - DESCRIPTION) . Repair connector if necessary.
	3. Is the temperature gauge operating OK?	3. Check gauge operation. . Repair as necessary.
	4. Coolant level low in cold ambient temperatures accompanied with poor heater performance.	4. Check coolant level in the coolant reserve/overflow tank and the radiator. Inspect system for leaks. Repair leaks as necessary.
	5. Improper operation of internal heater doors or heater controls.	5. Inspect heater and repair as necessary. (Refer to 24 - HEATING & AIR CONDITIONING - DIAGNOSIS AND TESTING)

COOLING (Continued)

CONDITION	POSSIBLE CAUSES	CORRECTION
TEMPERATURE GAUGE READS HIGH OR THE COOLANT WARNING LAMP ILLUMINATES. COOLANT MAY OR MAY NOT BE LOST OR LEAKING FROM THE COOLING SYSTEM	1. Trailer is being towed, a steep hill is being climbed, vehicle is operated in slow moving traffic, or engine is being idled with very high ambient (outside) temperatures and the air conditioning is on. Higher altitudes could aggravate these conditions.	1. This may be a temporary condition and repair is not necessary. Turn off the air conditioning and attempt to drive the vehicle without any of the previous conditions. Observe the temperature gauge. The gauge should return to the normal range. If the gauge does not return to the normal range, determine the cause for overheating and repair.
	2. Is the temperature gauge reading correctly?	2. Check gauge. Refer to Group 8E. Repair as necessary.
	3. Is the temperature warning illuminating unnecessarily?	3. Check warning lamp operation. Refer to Group 8E. Repair as necessary.
	4. Coolant low in coolant reserve/ overflow tank and radiator?	4. Check for coolant leaks and repair as necessary. (Refer to 7 - COOLING - DIAGNOSIS AND TESTING) .
	5. Pressure cap not installed tightly. If cap is loose, boiling point of coolant will be lowered. Also refer to the following Step 6.	5. Tighten cap
	6. Poor seals at the radiator cap.	6. (a) Check condition of cap and cap seals. (Refer to 7 - COOLING/ ENGINE/RADIATOR PRESSURE CAP - DIAGNOSIS AND TESTING) . (b) Check condition of radiator filler neck. If neck is bent or damaged, replace radiator.
	7. Coolant level low in radiator but not in coolant reserve/overflow tank. This means the radiator is not drawing coolant from the coolant reserve/overflow tank as the engine cools	7. (a) Check condition of radiator cap and cap seals. (Refer to 7 - COOLING/ENGINE/RADIATOR PRESSURE CAP - DIAGNOSIS AND TESTING) . (b) Check condition of radiator filler neck. If neck is bent or damaged, replace radiator. (c) Check condition of the hose from the radiator to the coolant tank. It should fit tight at both ends without any kinks or tears. Replace hose if necessary. (d) Check coolant reserve/overflow tank and tanks hoses for blockage. Repair as necessary.

COOLING (Continued)

CONDITION	POSSIBLE CAUSES	CORRECTION
	8. Incorrect coolant concentration	8. Check coolant. (Refer to 7 - COOLING/ENGINE/COOLANT - DESCRIPTION) for correct coolant/water mixture ratio.
	9. Coolant not flowing through system	9. Check for coolant flow at radiator filler neck with some coolant removed, engine warm and thermostat open. Coolant should be observed flowing through radiator. If flow is not observed, determine area of obstruction and repair as necessary.
	10. Radiator or A/C condenser fins are dirty or clogged.	10. Remove insects and debris. (Refer to 7 - COOLING/ENGINE/ RADIATOR - CLEANING) .
	11. Radiator core is corroded or plugged.	11. Have radiator re-cored or replaced.
	12. Aftermarket A/C installed without proper radiator.	12. Install proper radiator.
	13. Fuel or ignition system problems.	13. Refer to FUEL and /or IGNITION CONTROL for diagnosis.
	14. Dragging brakes.	14. Check and correct as necessary. (Refer to 5 - BRAKES - DIAGNOSIS AND TESTING) for correct procedures.
	15. Bug screen or cardboard is being used, reducing airflow.	15. Remove bug screen or cardboard.
	16. Thermostat partially or completely shut.	16. Check thermostat operation and replace as necessary. (Refer to 7 - COOLING/ENGINE/ENGINE COOLANT THERMOSTAT - DIAGNOSIS AND TESTING) .
	17. Viscous fan drive not operating properly.	17. Check fan drive operation and replace as necessary. (Refer to 7 - COOLING/ENGINE/FAN DRIVE VISCOUS CLUTCH - DIAGNOSIS AND TESTING) .
	18. Cylinder head gasket leaking.	18. Check for cylinder head gasket leaks. (Refer to 7 - COOLING - DIAGNOSIS AND TESTING) . For repair, (Refer to 9 - ENGINE/ CYLINDER HEAD - REMOVAL) .
	19. Heater core leaking.	19. Check heater core for leaks. (Refer to 24 - HEATING & AIR CONDITIONING/PLUMBING/ HEATER CORE - REMOVAL) . Repair as necessary.

COOLING (Continued)

CONDITION	POSSIBLE CAUSES	CORRECTION
	20. Hydraulic fan speed too low or inopertive.	20. Check for DTC code. Check fan operation speeds. Refer to fan speed operation table. Low power steering pump output. Refer to power steering pump dignosis - 4.7L engine.
TEMPERATURE GAUGE READING IS INCONSISTENT (FLUCTUATES, CYCLES OR IS ERRATIC)	1. During cold weather operation, with the heater blower in the high position, the gauge reading may drop slightly.	1. A normal condition. No correction is necessary.
	2. Temperature gauge or engine mounted gauge sensor defective or shorted. Also, corroded or loose wiring in this circuit.	2. Check operation of gauge and repair if necessary. Refer to Group 8E, Instrument Panel and Gauges.
	3. Gauge reading rises when vehicle is brought to a stop after heavy use (engine still running)	3. A normal condition. No correction is necessary. Gauge should return to normal range after vehicle is driven.
	4. Gauge reading high after re-starting a warmed up (hot) engine.	4. A normal condition. No correction is necessary. The gauge should return to normal range after a few minutes of engine operation.
	5. Coolant level low in radiator (air will build up in the cooling system causing the thermostat to open late).	5. Check and correct coolant leaks. (Refer to 7 - COOLING - DIAGNOSIS AND TESTING) .
	6. Cylinder head gasket leaking allowing exhaust gas to enter cooling system causing a thermostat to open late.	6. (a) Check for cylinder head gasket leaks. (Refer to 7 - COOLING - DIAGNOSIS AND TESTING) . (b) Check for coolant in the engine oil. Inspect for white steam emitting from the exhaust system. Repair as necessary.
	7. Water pump impeller loose on shaft.	7. Check water pump and replace as necessary. (Refer to 7 - COOLING/ENGINE/WATER PUMP - DIAGNOSIS AND TESTING) .
	8. Loose accessory drive belt. (water pump slipping)	8. (Refer to 7 - COOLING/ ACCESSORY DRIVE/DRIVE BELTS - DIAGNOSIS AND TESTING) . Check and correct as necessary.

COOLING (Continued)

CONDITION	POSSIBLE CAUSES	CORRECTION
	9. Air leak on the suction side of the water pump allows air to build up in cooling system causing thermostat to open late.	9. Locate leak and repair as necessary.
PRESSURE CAP IS BLOWING OFF STEAM AND/OR COOLANT TO COOLANT TANK. TEMPERATURE GAUGE READING MAY BE ABOVE NORMAL BUT NOT HIGH. COOLANT LEVEL MAY BE HIGH IN COOLANT RESERVE/ OVERFLOW TANK	1. Pressure relief valve in radiator cap is defective.	1. Check condition of radiator cap and cap seals. (Refer to 7 - COOLING/ENGINE/RADIATOR PRESSURE CAP - DIAGNOSIS AND TESTING) . Replace cap as necessary.
COOLANT LOSS TO THE GROUND WITHOUT PRESSURE CAP BLOWOFF. GAUGE READING HIGH OR HOT	1. Coolant leaks in radiator, cooling system hoses, water pump or engine.	1. Pressure test and repair as necessary. (Refer to 7 - COOLING - DIAGNOSIS AND TESTING) .
DETONATION OR PRE-IGNITION (NOT CAUSED BY IGNITION SYSTEM). GAUGE MAY OR MAY NOT BE READING HIGH	1. Engine overheating. 2. Freeze point of coolant not correct. Mixture is too rich or too lean.	1. Check reason for overheating and repair as necessary. 2. Check coolant concentration. (Refer to 7 - COOLING/ENGINE/ COOLANT - DESCRIPTION) and adjust ratio as required.
HOSE OR HOSES COLLAPSE WHILE ENGINE IS RUNNING	1. Vacuum created in cooling system on engine cool-down is not being relieved through coolant reserve/overflow system.	1. (a) Radiator cap relief valve stuck. (Refer to 7 - COOLING/ ENGINE/RADIATOR PRESSURE CAP - DIAGNOSIS AND TESTING) . Replace if necessary (b) Hose between coolant reserve/overflow tank and radiator is kinked. Repair as necessary. (c) Vent at coolant reserve/overflow tank is plugged. Clean vent and repair as necessary. (d) Reserve/overflow tank is internally blocked or plugged. Check for blockage and repair as necessary.

COOLING (Continued)

CONDITION	POSSIBLE CAUSES	CORRECTION
NOISY VISCOUS FAN/DRIVE	1. Fan blades loose - 4.0L.	1. Replace fan blade assembly. (Refer to 7 - COOLING/ENGINE/ RADIATOR FAN - REMOVAL)
	2. Fan blades striking a surrounding object.	2. Locate point of fan blade contact and repair as necessary.
	3. Air obstructions at radiator or air conditioning condenser.	3. Remove obstructions and/or clean debris or insects from radiator or A/C condenser.
	4. Thermal viscous fan drive has defective bearing - 4.0L	4. Replace fan drive. Bearing is not serviceable. (Refer to 7 - COOLING/ ENGINE/RADIATOR FAN - REMOVAL) .
INADEQUATE HEATER PERFORMANCE. THERMOSTAT FAILED IN OPEN POSITION	1. Has a Diagnostic trouble Code (DTC) been set?	1. (Refer to 25 - EMISSIONS CONTROL - DESCRIPTION) for correct procedures and replace thermostat if necessary
	2. Coolant level low	2. (Refer to 7 - COOLING - DIAGNOSIS AND TESTING) .
	3. Obstructions in heater hose/ fittings	3. Remove heater hoses at both ends and check for obstructions
	4. Heater hose kinked	4. Locate kinked area and repair as necessary
	5. Water pump is not pumping water to/through the heater core. When the engine is fully warmed up, both heater hoses should be hot to the touch. If only one of the hoses is hot, the water pump may not be operating correctly or the heater core may be plugged. Accessory drive belt may be slipping causing poor water pump operation.	5. (Refer to 7 - COOLING/ENGINE/ WATER PUMP - DIAGNOSIS AND TESTING) . If a slipping belt is detected, (Refer to 7 - COOLING/ ACCESSORY DRIVE/DRIVE BELTS - REMOVAL) . If heater core obstruction is detected, (Refer to 7 - COOLING - STANDARD PROCEDURE) for cooling system reverse flushing.
STEAM IS COMING FROM THE FRONT OF VEHICLE NEAR THE GRILL AREA WHEN WEATHER IS WET, ENGINE IS WARMED UP AND RUNNING, AND VEHICLE IS STATIONARY. TEMPERATURE GAUGE IS IN NORMAL RANGE	1. During wet weather, moisture (snow, ice or rain condensation) on the radiator will evaporate when the thermostat opens. This opening allows heated water into the radiator. When the moisture contacts the hot radiator, steam may be emitted. This usually occurs in cold weather with no fan or airflow to blow it away.	1. Occasional steam emitting from this area is normal. No repair is necessary.
COOLANT COLOR	1. Coolant color is not necessarily an indication of adequate corrosion or temperature protection. Do not rely on coolant color for determining condition of coolant.	1. (Refer to 7 - COOLING/ENGINE/ COOLANT - DESCRIPTION) for coolant concentration information. Adjust coolant mixture as necessary.

COOLING (Continued)

CONDITION	POSSIBLE CAUSES	CORRECTION
COOLANT LEVEL CHANGES IN COOLANT RESERVE/OVERFLOW TANK. TEMPERATURE GAUGE IS IN NORMAL RANGE	1. Level changes are to be expected as coolant volume fluctuates with engine temperature. If the level in the tank was between the FULL and ADD marks at normal operating temperature, the level should return to within that range after operation at elevated temperatures.	1. A normal condition. No repair is necessary.
	1. Fan control sensors inoperative.	1. Check for DTC's. Verify sensor readings.
	2. Fan control solenoid stuck ″on″.	2. Check fan operation speeds. Refer to fan speed operation table.
	3. Fan control solenoid harness damaged.	3. Check for DTC 1499. Repair as required.
	4. Transmission temperature too high.	4. Check for transmission over temp. DTC.
	5. Engine coolant temperature too high.	5. (a) Check coolant level. Correct level as required.
		(b) Thermostat stuck. Replace thermostat.
		(c) Water pump failed. Replace water pump.
		(d) Coolant flow restricted. Clean radiator.
		(e) Air flow over radiator obstructed.Remove obstruction.

COOLING (Continued)

DIAGNOSIS AND TESTING—COOLING SYSTEM TESTING FOR LEAKS

ULTRAVIOLET LIGHT METHOD

A leak detection additive is available through the parts department that can be added to cooling system. The additive is highly visible under ultraviolet light (black light). Pour one ounce of additive into cooling system. Place heater control unit in HEAT position. Start and operate engine until radiator upper hose is warm to touch. Aim the commercially available black light tool at components to be checked. If leaks are present, black light will cause additive to glow a bright green color.

The black light can be used in conjunction with a pressure tester to determine if any external leaks exist (Fig. 5).

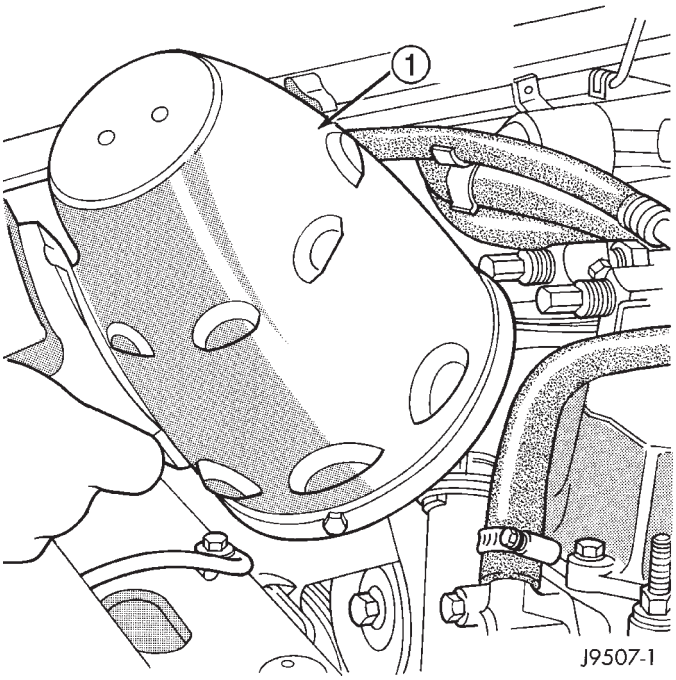

Fig. 5 Leak Detection Using Black Light—Typical

1 - TYPICAL BLACK LIGHT TOOL

PRESSURE TESTER METHOD

The engine should be at normal operating temperature. Recheck the system cold if cause of coolant loss is not located during the warm engine examination.

WARNING: HOT, PRESSURIZED COOLANT CAN CAUSE INJURY BY SCALDING.

Carefully remove radiator pressure cap from filler neck and check coolant level. Push down on cap to disengage it from stop tabs. Wipe inside of filler neck and examine lower inside sealing seat for nicks, cracks, paint, dirt and solder residue. Inspect radiator-to- reserve/overflow tank hose for internal obstructions. Insert a wire through the hose to be sure it is not obstructed.

Inspect cams on outside of filler neck. If cams are damaged, seating of pressure cap valve and tester seal will be affected.

Attach pressure tester (7700 or an equivalent) to radiator filler neck (Fig. 6).

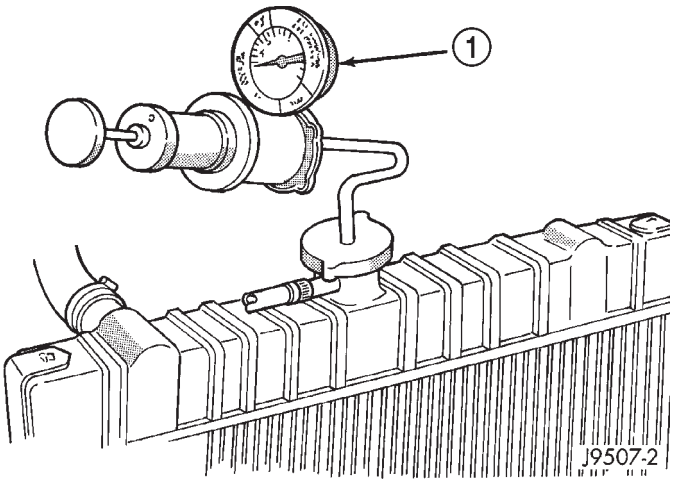

Fig. 6 Pressure Testing Cooling System—Typical

1 - TYPICAL COOLING SYSTEM PRESSURE TESTER

Operate tester pump to apply 103.4 kPa (15 psi) pressure to system. If hoses enlarge excessively or bulges while testing, replace as necessary. Observe gauge pointer and determine condition of cooling system according to following criteria:

Holds Steady: If pointer remains steady for two minutes, serious coolant leaks are not present in system. However, there could be an internal leak that does not appear with normal system test pressure. If it is certain that coolant is being lost and leaks cannot be detected, inspect for interior leakage or perform Internal Leakage Test.

Drops Slowly: Indicates a small leak or seepage is occurring. Examine all connections for seepage or slight leakage with a flashlight. Inspect radiator, hoses, gasket edges and heater. Seal small leak holes with a Sealer Lubricant (or equivalent). Repair leak holes and inspect system again with pressure applied.

Drops Quickly: Indicates that serious leakage is occurring. Examine system for external leakage. If leaks are not visible, inspect for internal leakage. Large radiator leak holes should be repaired by a reputable radiator repair shop.

COOLING (Continued)

INTERNAL LEAKAGE INSPECTION

Remove engine oil pan drain plug and drain a small amount of engine oil. If coolant is present in the pan, it will drain first because it is heavier than oil. An alternative method is to operate engine for a short period to churn the oil. After this is done, remove engine dipstick and inspect for water globules. Also inspect transmission dipstick for water globules and transmission fluid cooler for leakage.

WARNING: WITH RADIATOR PRESSURE TESTER TOOL INSTALLED ON RADIATOR, DO NOT ALLOW PRESSURE TO EXCEED 110 KPA (20 PSI). PRESSURE WILL BUILD UP QUICKLY IF A COMBUSTION LEAK IS PRESENT. TO RELEASE PRESSURE, ROCK TESTER FROM SIDE TO SIDE. WHEN REMOVING TESTER, DO NOT TURN TESTER MORE THAN 1/2 TURN IF SYSTEM IS UNDER PRESSURE.

Operate engine without pressure cap on radiator until thermostat opens. Attach a Pressure Tester to filler neck. If pressure builds up quickly it indicates a combustion leak exists. This is usually the result of a cylinder head gasket leak or crack in engine. Repair as necessary.

If there is not an immediate pressure increase, pump the Pressure Tester. Do this until indicated pressure is within system range of 110 kPa (16 psi). Fluctuation of gauge pointer indicates compression or combustion leakage into cooling system.

Because the vehicle is equipped with a catalytic converter, **do not** remove spark plug cables or short out cylinders to isolate compression leak.

If the needle on dial of pressure tester does not fluctuate, race engine a few times to check for an abnormal amount of coolant or steam. This would be emitting from exhaust pipe. Coolant or steam from exhaust pipe may indicate a faulty cylinder head gasket, cracked engine cylinder block or cylinder head.

A convenient check for exhaust gas leakage into cooling system is provided by a commercially available Block Leak Check tool. Follow manufacturers instructions when using this product.

COMBUSTION LEAKAGE TEST—WITHOUT PRESSURE TESTER

DO NOT WASTE reusable coolant. If solution is clean, drain coolant into a clean container for reuse.

WARNING: DO NOT REMOVE CYLINDER BLOCK DRAIN PLUGS OR LOOSEN RADIATOR DRAINCOCK WITH SYSTEM HOT AND UNDER PRESSURE. SERIOUS BURNS FROM COOLANT CAN OCCUR.

Drain sufficient coolant to allow thermostat removal. (Refer to 7 - COOLING/ENGINE/ENGINE COOLANT THERMOSTAT - REMOVAL). Remove accessory drive belt (Refer to 7 - COOLING/ACCESSORY DRIVE/DRIVE BELTS - REMOVAL).

Add coolant to radiator to bring level to within 6.3 mm (1/4 in) of top of thermostat housing.

CAUTION: Avoid overheating. Do not operate engine for an excessive period of time. Open draincock immediately after test to eliminate boil over.

Start engine and accelerate rapidly three times, to approximately 3000 rpm while observing coolant. If internal engine combustion gases are leaking into cooling system, bubbles will appear in coolant. If bubbles do not appear, internal combustion gas leakage is not present.

DIAGNOSIS AND TESTING—COOLING SYSTEM DEAERATION

As the engine operates, any air trapped in cooling system gathers under the radiator cap. The next time the engine is operated, thermal expansion of coolant will push any trapped air past radiator cap into the coolant reserve/overflow tank. Here it escapes to the atmosphere into the tank. When the engine cools down the coolant, it will be drawn from the reserve/overflow tank into the radiator to replace any removed air.

STANDARD PROCEDURES— DRAINING COOLING SYSTEM 4.7L ENGINE

WARNING: DO NOT REMOVE THE CYLINDER BLOCK DRAIN PLUGS (FIG. 7) OR LOOSEN THE RADIATOR DRAINCOCK WITH SYSTEM HOT AND UNDER PRESSURE. SERIOUS BURNS FROM COOLANT CAN OCCUR.

(1) DO NOT remove radiator cap first. With engine cold, raise vehicle on a hoist and locate radiator draincock.

NOTE: Radiator draincock is located on the left/lower side of radiator facing to rear of vehicle.

(2) Attach one end of a hose to the draincock. Put the other end into a clean container. Open draincock and drain coolant from radiator. This will empty the coolant reserve/overflow tank. The coolant does not have to be removed from the tank unless the system is being refilled with a fresh mixture. When tank is empty, remove radiator cap and continue draining cooling system.

COOLING (Continued)

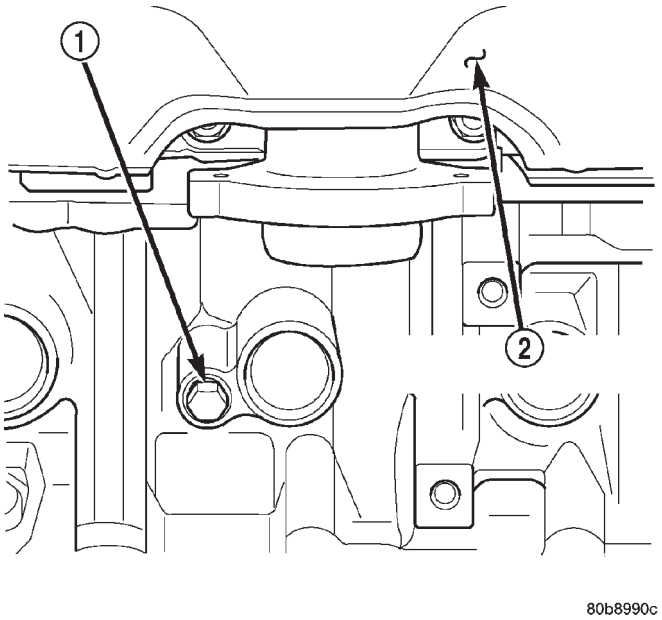

Fig. 7 Drain Plug—4.7L Engine

1 - CYLINDER BLOCK DRAIN PLUG
2 - EXHAUST MANIFOLD AND HEAT SHIELD

STANDARD PROCEDURES - REFILLING COOLING SYSTEM 4.7L ENGINE

(1) Tighten the radiator draincock and the cylinder block drain plug(s) (if removed).

CAUTION: Failure to purge air from the cooling system can result in an overheating condition and severe engine damage.

(2) Remove the cooling system bleed plug from the radiator upper hose inlet housing. (Fig. 8)Fill system using a 50/50 mixture of ethylene-glycol antifreeze and low mineral content water, until coolant begains coming out of the cooling system bleed hole. Install the cooling system bleed plug. Fill radiator to top and install radiator cap. Add sufficient coolant to the reserve/overflow tank to raise level to FULL mark.

(3) With heater control unit in the HEAT position, operate engine with radiator cap in place.

(4) After engine has reached normal operating temperature, shut engine off and allow it to cool. When engine is cooling down, coolant will be drawn into the radiator from the reserve/overflow tank.

(5) Add coolant to reserve/overflow tank as necessary. **Only add coolant to the reserve/overflow tank when the engine is cold. Coolant level in a warm engine will be higher due to thermal expansion.**

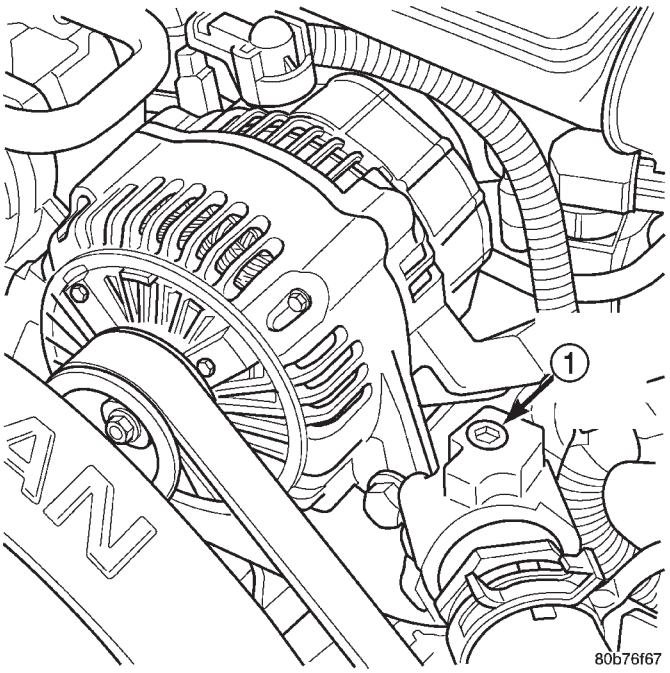

Fig. 8 Cooling System Bleed Plug—4.7L

1 - COOLING SYSTEM BLEED PLUG

STANDARD PROCEDURE—DRAINING COOLING SYSTEM - 4.0L ENGINE

WARNING: DO NOT REMOVE THE CYLINDER BLOCK DRAIN PLUGS OR LOOSEN THE RADIATOR DRAINCOCK WITH SYSTEM HOT AND UNDER PRESSURE. SERIOUS BURNS FROM COOLANT CAN OCCUR.

(1) DO NOT remove radiator cap first. With engine cold, raise vehicle on a hoist and locate radiator draincock.

NOTE: Radiator draincock is located on the right/lower side of radiator facing to rear of vehicle.

(2) Attach one end of a hose to the draincock. Put the other end into a clean container. Open draincock and drain coolant from radiator. This will empty the coolant reserve/overflow tank. The coolant does not have to be removed from the tank unless the system is being refilled with a fresh mixture. When tank is empty, remove radiator cap and continue draining cooling system.

To drain the engine of coolant, remove the cylinder block drain plug located on the side of cylinder block (Fig. 9).

COOLING (Continued)

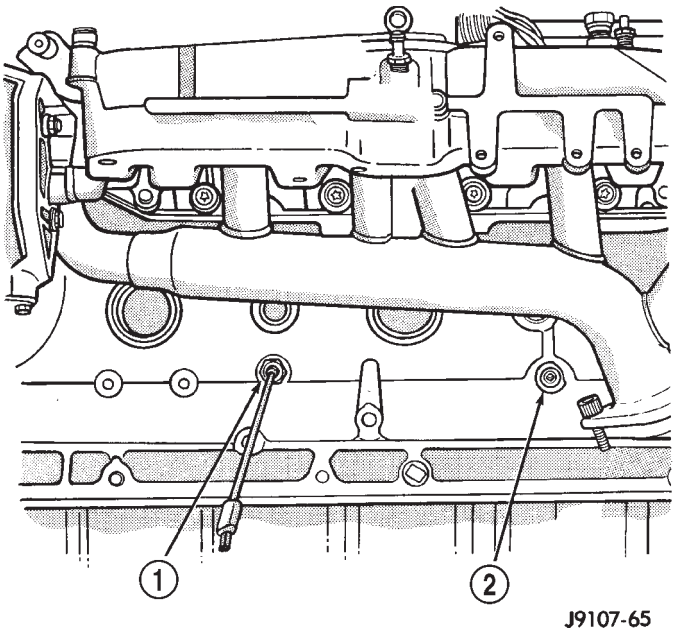

Fig. 9 Drain Plug—4.0L Engine

1 - COOLANT TEMPERATURE SENSOR
2 - BLOCK DRAIN PLUG

STANDARD PROCEDURE—REFILLING COOLING SYSTEM - 4.0L ENGINE

(1) Tighten the radiator draincock and the cylinder block drain plug(s) (if removed).

(2) Fill system using a 50/50 mixture of ethylene-glycol antifreeze and low mineral content water. Fill radiator to top and install radiator cap. Add sufficient coolant to the reserve/overflow tank to raise level to FULL mark.

(3) With heater control unit in the HEAT position, operate engine with radiator cap in place.

(4) After engine has reached normal operating temperature, shut engine off and allow it to cool. When engine is cooling down, coolant will be drawn into the radiator from the reserve/overflow tank.

(5) Add coolant to reserve/overflow tank as necessary. **Only add coolant to the reserve/overflow tank when the engine is cold. Coolant level in a warm engine will be higher due to thermal expansion.** To purge the cooling system of all air, this heat up/cool down cycle (adding coolant to cold engine) must be performed three times. Add necessary coolant to raise tank level to the FULL mark after each cool down period.

STANDARD PROCEDURE—COOLING SYSTEM (REVERSE FLUSHING)

CAUTION: The cooling system normally operates at 97-to-124 kPa (14- to-18 psi) pressure. Exceeding this pressure may damage the radiator or hoses.

Reverse flushing of the cooling system is the forcing of water through the cooling system. This is done using air pressure in the opposite direction of normal coolant flow. It is usually only necessary with very dirty systems with evidence of partial plugging.

CHEMICAL CLEANING

If visual inspection indicates the formation of sludge or scaly deposits, use a radiator cleaner (Mopar Radiator Kleen or equivalent) before flushing. This will soften scale and other deposits and aid the flushing operation.

CAUTION: Be sure instructions on the container are followed.

REVERSE FLUSHING RADIATOR

Disconnect the radiator hoses from the radiator fittings. Attach a section of radiator hose to the radiator bottom outlet fitting and insert the flushing gun. Connect a water supply hose and air supply hose to the flushing gun.

CAUTION: The cooling system normally operates at 97-to-124 kPa (14- to-18 psi) pressure. Exceeding this pressure may damage the radiator or hoses.

Allow the radiator to fill with water. When radiator is filled, apply air in short blasts allowing radiator to refill between blasts. Continue this reverse flushing until clean water flows out through rear of radiator cooling tube passages. For more information, refer to operating instructions supplied with flushing equipment. Have radiator cleaned more extensively by a radiator repair shop.

REVERSE FLUSHING ENGINE

Drain the cooling system. Remove the thermostat housing and thermostat. Install the thermostat housing. Disconnect the radiator upper hose from the radiator and attach the flushing gun to the hose. Disconnect the radiator lower hose from the water pump. Attach a lead away hose to the water pump inlet fitting.

CAUTION: Be sure that the heater control valve is closed (heat off). This is done to prevent coolant flow with scale and other deposits from entering the heater core.

Connect the water supply hose and air supply hose to the flushing gun. Allow the engine to fill with water. When the engine is filled, apply air in short blasts, allowing the system to fill between air blasts. Continue until clean water flows through the lead

COOLING (Continued)

away hose. For more information, refer to operating instructions supplied with flushing equipment.

Remove the lead away hose, flushing gun, water supply hose and air supply hose. Remove the thermostat housing and install thermostat. Install the thermostat housing with a replacement gasket. Refer to Thermostat Replacement. Connect the radiator hoses. Refill the cooling system with the correct anti-freeze/water mixture.

SPECIFICATIONS

TORQUE

DESCRIPTION	N·m	Ft. Lbs.	In. Lbs.
Automatic Belt Tensioner to Mounting Bracket—Bolt			
4.0L	28	—	250
4.7L	41	30	—
Automatic Belt Tensioner Pulley— Bolt (4.7L)	61	45	—
Block Heater—Bolt			
4.0L	4	—	32
4.7L	2	—	17
Fan Blade Assy. to Viscous Drive— Bolts 4.0L	23	—	200
Generator Mounting—Bolts 4.0L	57	42	—
Radiator Upper Isolator to Crossmember—Nuts	3	—	20
Radiator Upper Isolator to Radiator— Nuts	4	—	36
Radiator Brace—Bolts	10	—	90
Thermostat Housing—Bolts			
4.0L	22	16	—
4.7L	13	—	115
Upper Radiator Crossmember to			
Body—Bolts	10	—	90
Water Pump—Bolts			
4.0L	23	17	—
4.7L	54	40	—
Water Pump Pulley to Water Pump— Bolts 4.0L	28	—	250
High Pressure Inlet Hose to Hydraulic Fan Drive—1/2 inch Fitting	49	36	—
High Pressure Outlet Hose to Steering Gear—3/8 inch Fitting	29	21.5	—
Fan Shroud to Radiator Mounting Bolts	6	50	—

SPECIAL TOOLS

COOLING

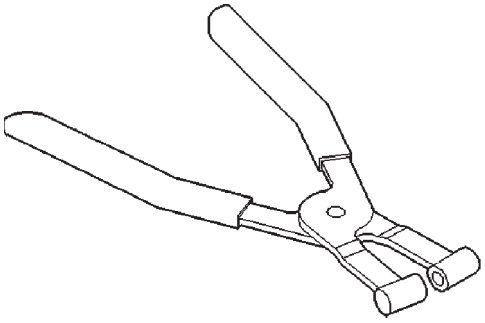

Pliers 6094

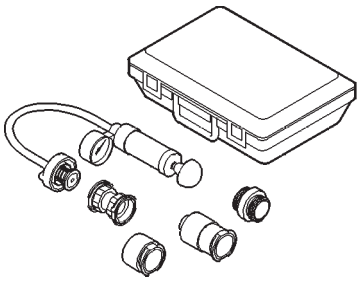

Pressure Tester 7700–A

ACCESSORY DRIVE

TABLE OF CONTENTS

	page
BELT TENSIONERS	
REMOVAL	17
INSTALLATION	18
DRIVE BELTS - 4.0L	
DIAGNOSIS AND TESTING	18
SERPENTINE DRIVE BELT DIAGNOSIS	18
REMOVAL	20
INSTALLATION	20
DRIVE BELTS - 4.7L	
DIAGNOSIS AND TESTING	21
SERPENTINE DRIVE BELT DIAGNOSIS	21
REMOVAL	23
INSTALLATION	23

BELT TENSIONERS

REMOVAL—4.7L ENGINE

(1) Remove accessory drive belt (Refer to 7 - COOLING/ACCESSORY DRIVE/DRIVE BELTS - REMOVAL).

(2) Remove tensioner assembly from engine front cover (Fig. 1).

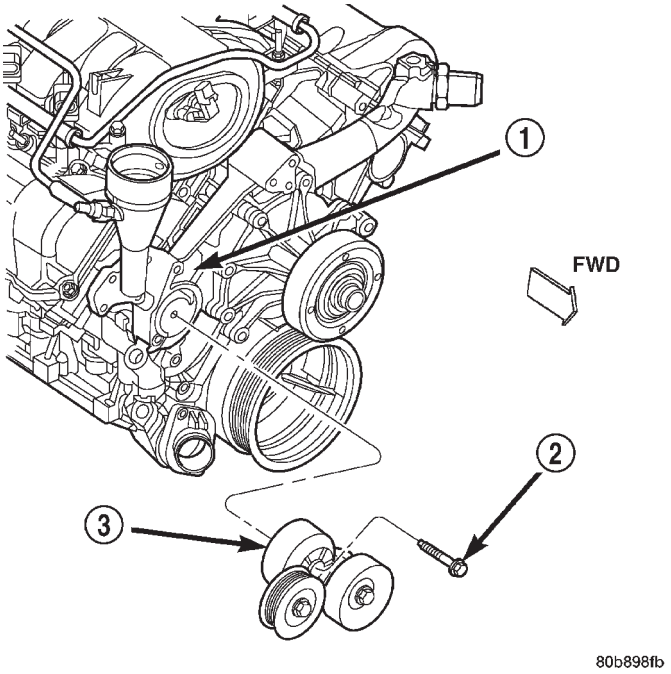

Fig. 1 Automatic Belt Tensioner

1 - TIMING CHAIN COVER
2 - BOLT TORQUE TO 41 N·m (30 FT LBS)
3 - AUTOMATIC BELT TENSIONER

WARNING: BECAUSE OF HIGH SPRING TENSION, DO NOT ATTEMPT TO DISASSEMBLE AUTOMATIC TENSIONER. UNIT IS SERVICED AS AN ASSEMBLY (EXCEPT FOR PULLEY ON TENSIONER).

(3) Remove pulley bolt. Remove pulley from tensioner.

REMOVAL—4.0L ENGINE

(1) Remove accessory drive belt (Refer to 7 - COOLING/ACCESSORY DRIVE/DRIVE BELTS - REMOVAL).

(2) Remove tensioner assembly from mounting bracket (Fig. 2).

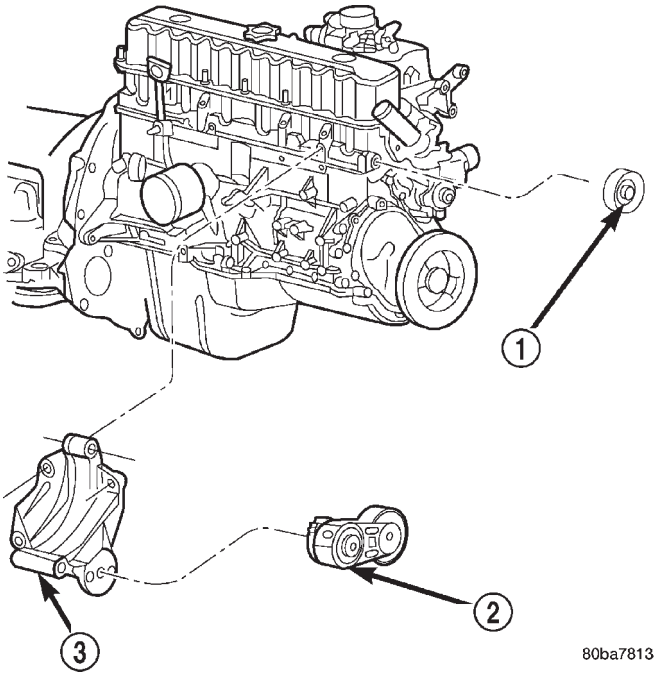

Fig. 2 Automatic Belt Tensioner

1 - IDLER PULLEY TIGHTEN TO 47 N·m (35 FT. LBS.)
2 - AUTOMATIC BELT TENSIONER
3 - GENERATOR MOUNTING BRACKET

BELT TENSIONERS (Continued)

WARNING: BECAUSE OF HIGH SPRING TENSION, DO NOT ATTEMPT TO DISASSEMBLE AUTOMATIC TENSIONER. UNIT IS SERVICED AS AN ASSEMBLY.

INSTALLATION—4.7L ENGINE

(1) Install pulley and pulley bolt to tensioner. Tighten bolt to 61 N·m (45 ft. lbs.) torque.

(2) An indexing slot is located on back of tensioner. Align this slot to the head of the bolt on the front cover. Install the mounting bolt. Tighten bolt to 41 N·m (30 ft. lbs.).

(3) Install drive belt (Refer to 7 - COOLING/ACCESSORY DRIVE/DRIVE BELTS - INSTALLATION) .

(4) Check belt indexing marks (Refer to 7 - COOLING/ACCESSORY DRIVE/DRIVE BELTS - INSTALLATION) .

INSTALLATION—4.0L ENGINE

(1) Install tensioner assembly to mounting bracket, align the two dowels on the tensioner with the mounting bracket and hand start the bolt. Tighten bolt to 28 N·m (250 in. lbs.).

CAUTION: To prevent damage to coil case, coil mounting bolts must be torqued.

(2) Install drive belt. (Refer to 7 - COOLING/ACCESSORY DRIVE/DRIVE BELTS - INSTALLATION) .

(3) Check belt indexing marks (Refer to 7 - COOLING/ACCESSORY DRIVE/DRIVE BELTS - INSTALLATION) .

DRIVE BELTS - 4.0L

DIAGNOSIS AND TESTING—SERPENTINE DRIVE BELT

When diagnosing serpentine drive belts, small cracks that run across ribbed surface of belt from rib to rib (Fig. 3), are considered normal. These are not a reason to replace belt. However, cracks running along a rib (not across) are **not** normal. Any belt with cracks running along a rib must be replaced (Fig. 3). Also replace belt if it has excessive wear, frayed cords or severe glazing.

Refer to for further belt diagnosis.

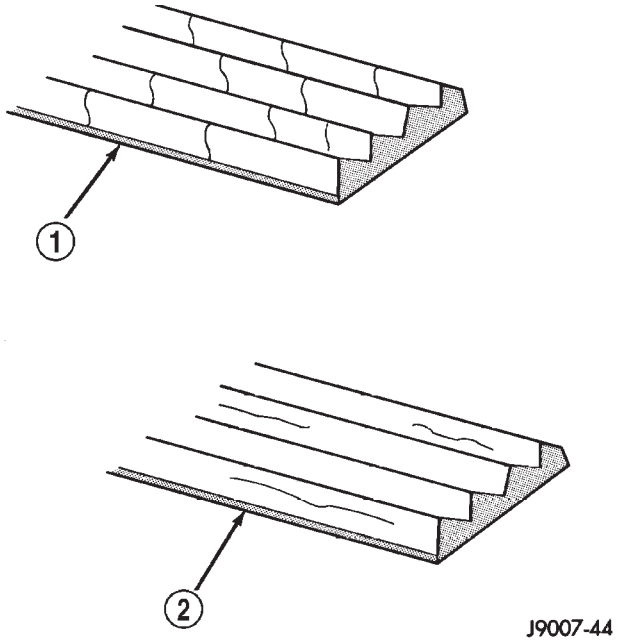

Fig. 3 Serpentine Accessory Drive Belt Wear Patterns

1 - NORMAL CRACKS BELT OK
2 - NOT NORMAL CRACKS REPLACE BELT

DRIVE BELTS - 4.0L (Continued)

SERPENTINE DRIVE BELT DIAGNOSIS CHART

CONDITION	POSSIBLE CAUSES	CORRECTION
RIB CHUNKING (ONE OR MORE RIBS HAS SEPARATED FROM BELT BODY)	1. Foreign objects imbedded in pulley grooves.	1. Remove foreign objects from pulley grooves. Replace belt.
	2. Installation damage.	2. Replace belt.
RIB OR BELT WEAR	1. Pulley(s) misaligned.	1. Align pulley(s).
	2. Abrasive environment.	2. Clean pulley(s). Replace belt if necessary.
	3. Rusted pulley(s).	3. Clean rust from pulley(s).
	4. Sharp or jagged pulley groove tips.	4. Replace pulley.
	5. Rubber deteriorated.	5. Replace belt.
LONGITUDINAL BELT CRACKING (CRACKS BETWEEN TWO RIBS)	1. Belt has mistracked from pulley groove.	1. Replace belt.
	2. Pulley groove tip has worn away rubber to tensile member.	2. Replace belt.
BELT SLIPS	1. Belt slipping because of insufficient tension.	1. Replace automatic belt tensioner.
	2. Belt routed incorrectly	2. Verify belt routing.
	3. Incorrect belt.	3. Replace belt.
	4. Belt or pulley subjected to substance (belt dressing, oil ethylene glycol) that has reduced friction.	4. Replace belt and clean pulleys.
	5. Driven component bearing failure.	5. Replace faulty component bearing.
	6. Belt glazed and hardened from heat and excessive slippage.	6. Replace belt.
“GROOVE JUMPING” (BELT DOES NOT MAINTAIN CORRECT POSITION ON PULLEY)	1. Belt tension either too high or too low.	1. Replace automatic belt tensioner.
	2. Belt routed incorrectly.	2. Verify belt routing.
	3. Incorrect belt.	3. Replace belt.
	4. Pulley(s) not within design tolerance.	4. Replace pulley(s).
	5. Foreign object(s) in grooves.	5. Remove foreign objects from grooves.
	6. Pulley misalignment.	6. Check and replace.
	7. Belt cord line is broken.	7. Replace belt.

DRIVE BELTS - 4.0L (Continued)

CONDITION	POSSIBLE CAUSES	CORRECTION
BELT BROKEN (NOTE: IDENTIFY AND CORRECT PROBLEM BEFORE NEW BELT IS INSTALLED)	1. Excessive tension.	1. Replace belt and automatic belt tensioner.
	2. Incorrect belt.	2. Replace belt.
	3. Tensile member damaged during belt installation.	3. Replace belt.
	4. Severe misalignment.	4. Check and replace.
	5. Bracket, pulley, or bearing failure.	5. Replace defective component and belt.
NOISE (OBJECTIONABLE SQUEAL, SQUEAK, OR RUMBLE IS HEARD OR FELT WHILE DRIVE BELT IS IN OPERATION)	1. Belt slippage.	1. Replace belt or automatic belt tensioner.
	2. Bearing noise.	2. Locate and repair.
	3. Belt misalignment.	3. Replace belt.
	4. Belt-to-pulley mismatch.	4. Install correct belt.

REMOVAL—4.0L ENGINE

NOTE: The belt routing schematics are published from the latest information available at the time of publication. If anything differs between these schematics and the Belt Routing Label, use the schematics on Belt Routing Label. This label is located in the engine compartment.

CAUTION: DO NOT LET TENSIONER ARM SNAP BACK TO THE FREEARM POSITION, SEVERE DAMAGE MAY OCCUR TO THE TENSIONER.

Belt tension is not adjustable. Belt adjustment is maintained by an automatic (spring load) belt tensioner.

(1) Disconnect negative battery cable from battery.

(2) Rotate belt tensioner until it contacts its stop. Remove belt, then slowly rotate the tensioner into the freearm position. (Fig. 4).

INSTALLATION—4.0L ENGINE

NOTE: The belt routing schematics are published from the latest information available at the time of publication. If anything differs between these schematics and the Belt Routing Label, use the schematics on Belt Routing Label. This label is located in the engine compartment.

Belt tension is not adjustable. Belt adjustment is maintained by an automatic (spring load) belt tensioner.

(1) Check condition of all pulleys.

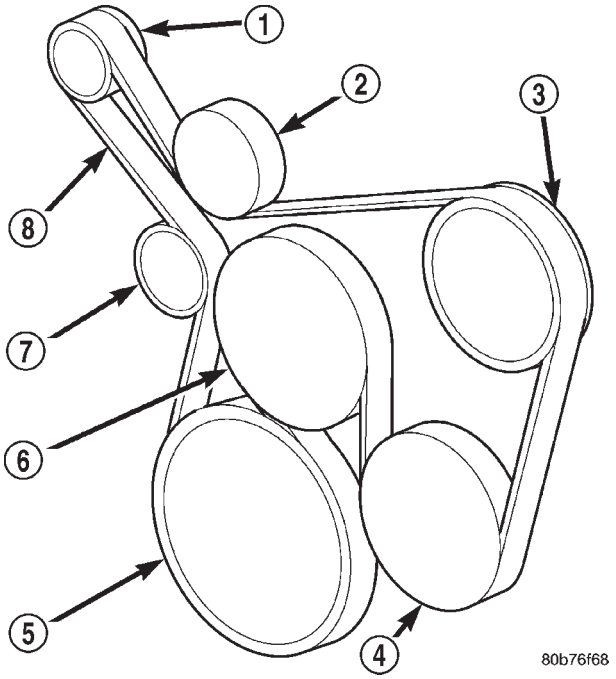

Fig. 4 Belt Routing—4.0L

1 - GENERATOR
2 - IDLER
3 - POWER STEERING
4 - A/C
5 - CRANKSHAFT
6 - WATER PUMP
7 - TENSIONER
8 - ACCESSORY DRIVE BELT

CAUTION: When installing the serpentine accessory drive belt, the belt MUST be routed correctly. If not, the engine may overheat due to the water pump rotating in the wrong direction (Fig. 4).

DRIVE BELTS - 4.0L (Continued)

(2) Install new belt (Fig. 4). Route the belt around all pulleys except the idler pulley. Rotate the tensioner arm until it contacts its stop position. Route the belt around the idler and slowly let the tensioner rotate into the belt. Make sure the belt is seated onto all pulleys.

(3) With the drive belt installed, inspect the belt wear indicator (Fig. 5). On 4.0L Engines, the indicator mark must be between the minimum and maximum marks. If the measurement exceedes this specification replace the serpentine accessory drive belt.

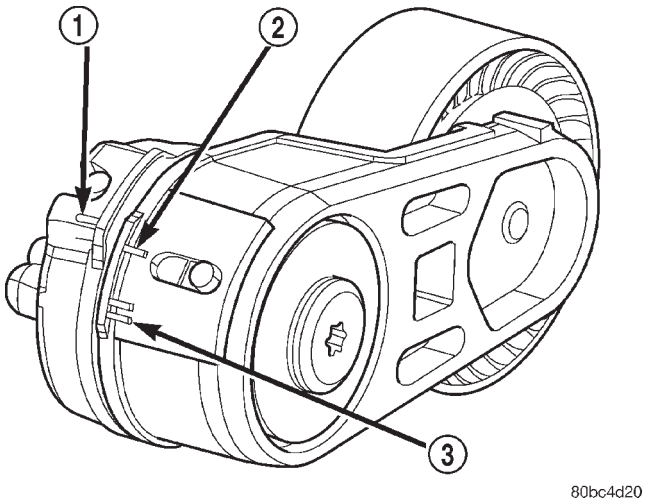

Fig. 5 Accessory Drive Belt Wear Indicator

1 - INDICATOR MARK
2 - MINIMUM TENSION MARK
3 - MAXIMUM TENSION MARK

DRIVE BELTS - 4.7L

DIAGNOSIS AND TESTING—SERPENTINE DRIVE BELT

When diagnosing serpentine drive belts, small cracks that run across ribbed surface of belt from rib to rib (Fig. 6), are considered normal. These are not a reason to replace belt. However, cracks running along a rib (not across) are **not** normal. Any belt with cracks running along a rib must be replaced (Fig. 6). Also replace belt if it has excessive wear, frayed cords or severe glazing.

Refer to for further belt diagnosis.

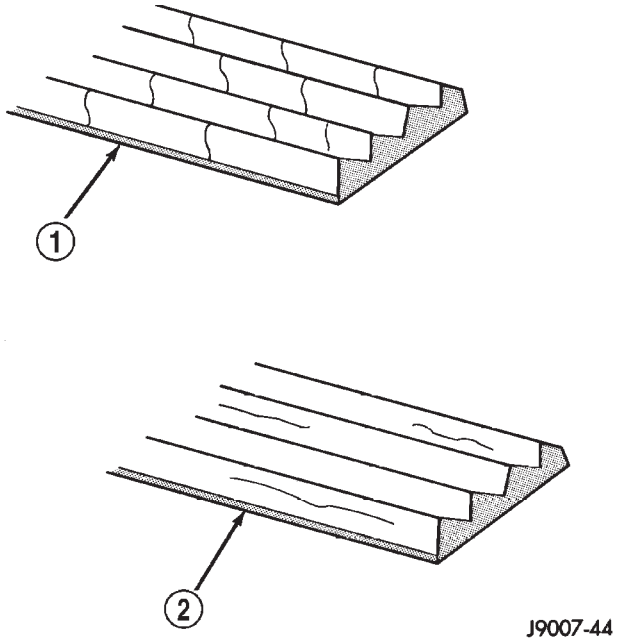

Fig. 6 Serpentine Accessory Drive Belt Wear Patterns

1 - NORMAL CRACKS BELT OK
2 - NOT NORMAL CRACKS REPLACE BELT

DRIVE BELTS - 4.7L (Continued)

SERPENTINE DRIVE BELT DIAGNOSIS CHART

CONDITION	POSSIBLE CAUSES	CORRECTION
RIB CHUNKING (ONE OR MORE RIBS HAS SEPARATED FROM BELT BODY)	1. Foreign objects imbedded in pulley grooves.	1. Remove foreign objects from pulley grooves. Replace belt.
	2. Installation damage.	2. Replace belt.
RIB OR BELT WEAR	1. Pulley(s) misaligned.	1. Align pulley(s).
	2. Abrasive environment.	2. Clean pulley(s). Replace belt if necessary.
	3. Rusted pulley(s).	3. Clean rust from pulley(s).
	4. Sharp or jagged pulley groove tips.	4. Replace pulley.
	5. Rubber deteriorated.	5. Replace belt.
LONGITUDINAL BELT CRACKING (CRACKS BETWEEN TWO RIBS)	1. Belt has mistracked from pulley groove.	1. Replace belt.
	2. Pulley groove tip has worn away rubber to tensile member.	2. Replace belt.
BELT SLIPS	1. Belt slipping because of insufficient tension.	1. Replace automatic belt tensioner.
	2. Belt routed incorrectly	2. Verify belt routing.
	3. Incorrect belt.	3. Replace belt.
	4. Belt or pulley subjected to substance (belt dressing, oil ethylene glycol) that has reduced friction.	4. Replace belt and clean pulleys.
	5. Driven component bearing failure.	5. Replace faulty component bearing.
	6. Belt glazed and hardened from heat and excessive slippage.	6. Replace belt.
“GROOVE JUMPING” (BELT DOES NOT MAINTAIN CORRECT POSITION ON PULLEY)	1. Belt tension either too high or too low.	1. Replace automatic belt tensioner.
	2. Belt routed incorrectly.	2. Verify belt routing.
	3. Incorrect belt.	3. Replace belt.
	4. Pulley(s) not within design tolerance.	4. Replace pulley(s).
	5. Foreign object(s) in grooves.	5. Remove foreign objects from grooves.
	6. Pulley misalignment.	6. Check and replace.
	7. Belt cord line is broken.	7. Replace belt.

DRIVE BELTS - 4.7L (Continued)

CONDITION	POSSIBLE CAUSES	CORRECTION
BELT BROKEN (NOTE: IDENTIFY AND CORRECT PROBLEM BEFORE NEW BELT IS INSTALLED)	1. Excessive tension.	1. Replace belt and automatic belt tensioner.
	2. Incorrect belt.	2. Replace belt.
	3. Tensile member damaged during belt installation.	3. Replace belt.
	4. Severe misalignment.	4. Check and replace.
	5. Bracket, pulley, or bearing failure.	5. Replace defective component and belt.
NOISE (OBJECTIONABLE SQUEAL, SQUEAK, OR RUMBLE IS HEARD OR FELT WHILE DRIVE BELT IS IN OPERATION)	1. Belt slippage.	1. Replace belt or automatic belt tensioner.
	2. Bearing noise.	2. Locate and repair.
	3. Belt misalignment.	3. Replace belt.
	4. Belt-to-pulley mismatch.	4. Install correct belt.

REMOVAL—4.7L ENGINE

NOTE: The belt routing schematics are published from the latest information available at the time of publication. If anything differs between these schematics and the Belt Routing Label, use the schematics on Belt Routing Label. This label is located in the engine compartment.

CAUTION: DO NOT LET TENSIONER ARM SNAP BACK TO THE FREEARM POSITION, SEVERE DAMAGE MAY OCCUR TO THE TENSIONER.

Belt tension is not adjustable. Belt adjustment is maintained by an automatic (spring load) belt tensioner.

(1) Disconnect negative battery cable from battery.

(2) Rotate belt tensioner until it contacts its stop. Remove belt, then slowly rotate the tensioner into the freearm position. (Fig. 7).

INSTALLATION—4.7L ENGINE

NOTE: The belt routing schematics are published from the latest information available at the time of publication. If anything differs between these schematics and the Belt Routing Label, use the schematics on Belt Routing Label. This label is located in the engine compartment.

Belt tension is not adjustable. Belt adjustment is maintained by an automatic (spring load) belt tensioner.

(1) Check condition of all pulleys.

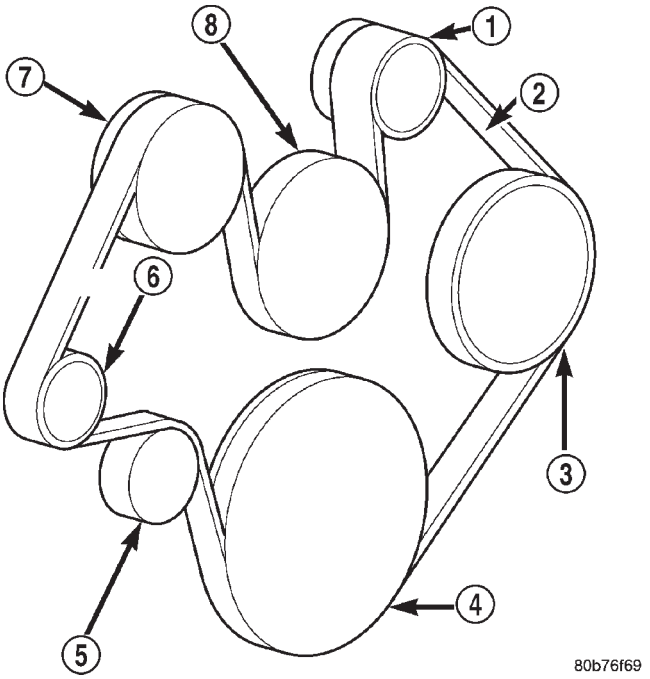

Fig. 7 Belt Routing—4.7L

1 - GENERATOR PULLEY
2 - ACCESSORY DRIVE BELT
3 - POWER STEERING PUMP PULLEY
4 - CRANKSHAFT PULLEY
5 - IDLER PULLEY
6 - TENSIONER
7 - A/C COMPRESSOR PULLEY
8 - WATER PUMP PULLEY

CAUTION: When installing the serpentine accessory drive belt, the belt MUST be routed correctly. If not, the engine may overheat due to the water pump rotating in the wrong direction (Fig. 7).

DRIVE BELTS - 4.7L (Continued)

(2) Install new belt (Fig. 7). Route the belt around all pulleys except the idler pulley. Rotate the tensioner arm until it contacts its stop position. Route the belt around the idler and slowly let the tensioner rotate into the belt. Make sure the belt is seated onto all pulleys.

(3) With the drive belt installed, inspect the belt wear indicator (Fig. 8). On 4.7L Engines the gap between the tang and the housing stop (measurement A) must not exceed 24 mm (.94 inches).

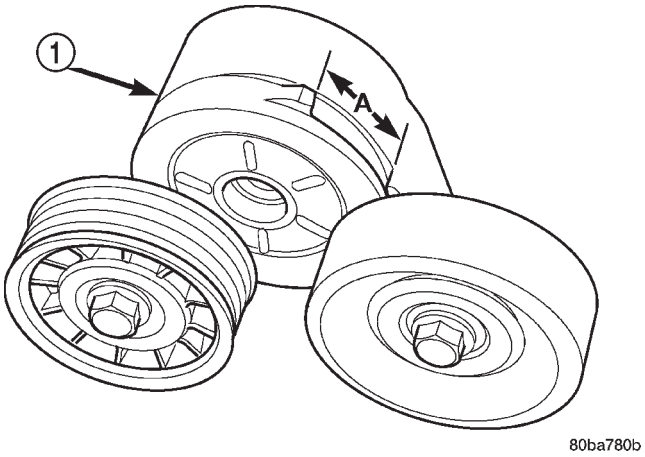

Fig. 8 Accessory Drive Belt Wear Indicator

1 - AUTOMATIC TENSIONER ASSEMBLY

ENGINE

TABLE OF CONTENTS

page

COOLANT
DESCRIPTION . . . 26
OPERATION . . . 26
COOLANT LEVEL SENSOR
REMOVAL . . . 26
INSTALLATION . . . 27
COOLANT RECOVERY PRESS CONTAINER
DESCRIPTION . . . 27
RADIATOR FAN - 4.7L
DESCRIPTION . . . 27
OPERATION . . . 28
REMOVAL . . . 28
CLEANING . . . 29
INSTALLATION . . . 29
RADIATOR FAN - 4.0L
DESCRIPTION . . . 31
REMOVAL . . . 31
CLEANING . . . 32
INSPECTION . . . 32
INSTALLATION . . . 32
ENGINE BLOCK HEATER
DESCRIPTION . . . 32
OPERATION . . . 33
DIAGNOSIS AND TESTING . . . 33
ENGINE BLOCK HEATER . . . 33
REMOVAL . . . 33
INSTALLATION . . . 34
ENGINE COOLANT TEMP SENSOR
DESCRIPTION . . . 35
OPERATION . . . 35
REMOVAL . . . 35
INSTALLATION . . . 36
ENGINE COOLANT THERMOSTAT
DESCRIPTION . . . 36
OPERATION . . . 36
DIAGNOSIS AND TESTING . . . 37
THERMOSTAT . . . 37
REMOVAL . . . 37
INSTALLATION . . . 38
FAN DRIVE VISCOUS CLUTCH - 4.0L
DESCRIPTION . . . 39
OPERATION . . . 40
DIAGNOSIS AND TESTING . . . 40
VISCOUS FAN DRIVE . . . 40
PWM FAN CONTROL MODULE - 4.0L
DESCRIPTION . . . 40
OPERATION . . . 40
REMOVAL . . . 41
INSTALLATION . . . 42
RADIATOR - 4.7L
DESCRIPTION . . . 42
REMOVAL . . . 42
CLEANING . . . 43
INSPECTION . . . 44
INSTALLATION . . . 44
RADIATOR - 4.0L
DESCRIPTION . . . 44
REMOVAL . . . 44
CLEANING . . . 46
INSPECTION . . . 46
INSTALLATION . . . 46
RADIATOR FAN MOTOR
DIAGNOSIS AND TESTING . . . 47
ELECTRIC COOLING FAN . . . 47
WATER PUMP - 4.7L
DESCRIPTION . . . 47
OPERATION . . . 47
DIAGNOSIS AND TESTING . . . 48
WATER PUMP . . . 48
REMOVAL . . . 48
CLEANING . . . 49
INSPECTION . . . 49
INSTALLATION . . . 49
WATER PUMP - 4.0L
DESCRIPTION . . . 49
DIAGNOSIS AND TESTING . . . 50
WATER PUMP . . . 50
REMOVAL . . . 50
CLEANING . . . 52
INSPECTION . . . 52
INSTALLATION . . . 52
RADIATOR PRESSURE CAP
DESCRIPTION . . . 52
OPERATION . . . 53
DIAGNOSIS AND TESTING . . . 53
RADIATOR CAP . . . 53
CLEANING . . . 53
INSPECTION . . . 53
WATER PUMP INLET TUBE
REMOVAL . . . 54
INSTALLATION . . . 54

COOLANT

DESCRIPTION

ETHYLENE-GLYCOL MIXTURES

CAUTION: Richer antifreeze mixtures cannot be measured with normal field equipment and can cause problems associated with 100 percent ethylene-glycol.

The required ethylene-glycol (antifreeze) and water mixture depends upon the climate and vehicle operating conditions. The recommended mixture of 50/50 ethylene-glycol and water will provide protection against freezing to -37 deg. C (-35 deg. F). The antifreeze concentration **must always** be a minimum of 44 percent, year-round in all climates. **If percentage is lower than 44 percent, engine parts may be eroded by cavitation, and cooling system components may be severely damaged by corrosion.** Maximum protection against freezing is provided with a 68 percent antifreeze concentration, which prevents freezing down to -67.7 deg. C (-90 deg. F). A higher percentage will freeze at a warmer temperature. Also, a higher percentage of antifreeze can cause the engine to overheat because the specific heat of antifreeze is lower than that of water.

Use of 100 percent ethylene-glycol will cause formation of additive deposits in the system, as the corrosion inhibitive additives in ethylene-glycol require the presence of water to dissolve. The deposits act as insulation, causing temperatures to rise to as high as 149 deg. C (300) deg. F). This temperature is hot enough to melt plastic and soften solder. The increased temperature can result in engine detonation. In addition, 100 percent ethylene-glycol freezes at 22 deg. C (-8 deg. F).

PROPYLENE-GLYCOL MIXTURES

It's overall effective temperature range is smaller than that of ethylene-glycol. The freeze point of 50/50 propylene-glycol and water is -32 deg. C (-26 deg. F). 5 deg. C higher than ethylene-glycol's freeze point. The boiling point (protection against summer boil-over) of propylene-glycol is 125 deg. C (257 deg. F) at 96.5 kPa (14 psi), compared to 128 deg. C (263 deg. F) for ethylene-glycol. Use of propylene-glycol can result in boil-over or freeze-up on a cooling system designed for ethylene-glycol. Propylene glycol also has poorer heat transfer characteristics than ethylene glycol. This can increase cylinder head temperatures under certain conditions.

Propylene-glycol/ethylene-glycol Mixtures can cause the destabilization of various corrosion inhibitors, causing damage to the various cooling system components. Also, once ethylene-glycol and propylene-glycol based coolants are mixed in the vehicle, conventional methods of determining freeze point will not be accurate. Both the refractive index and specific gravity differ between ethylene glycol and propylene glycol.

OPERATION

Coolant flows through the engine block absorbing the heat from the engine, then flows to the radiator where the cooling fins in the radiator transfers the heat from the coolant to the atmosphere. During cold weather the ethylene-glycol coolant prevents water present in the cooling system from freezing within temperatures indicated by mixture ratio of coolant to water.

COOLANT LEVEL SENSOR

REMOVAL

(1) Open Hood.

(2) Disconnect electrical connector from coolant level sensor.

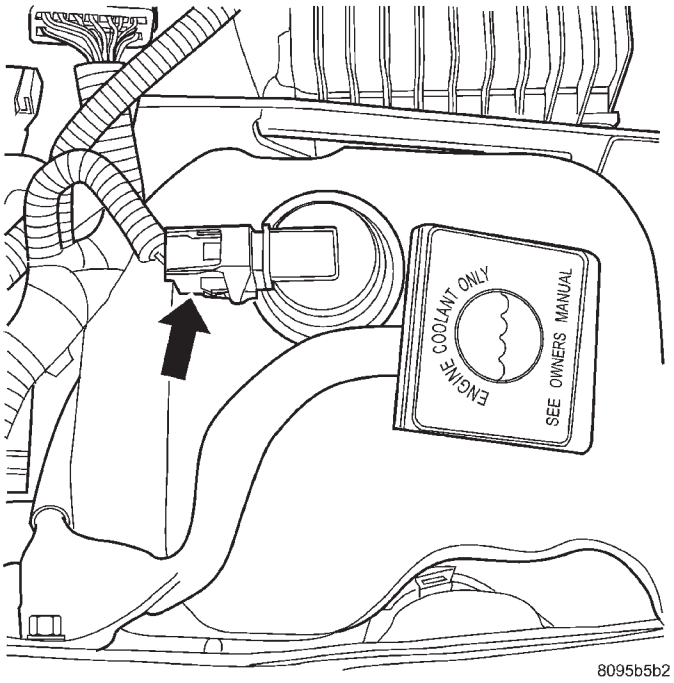

Fig. 1 Coolant Level Sensor Electrical Connector

(3) Pull coolant level sensor out of coolant recovery pressure container.

COOLANT LEVEL SENSOR (Continued)

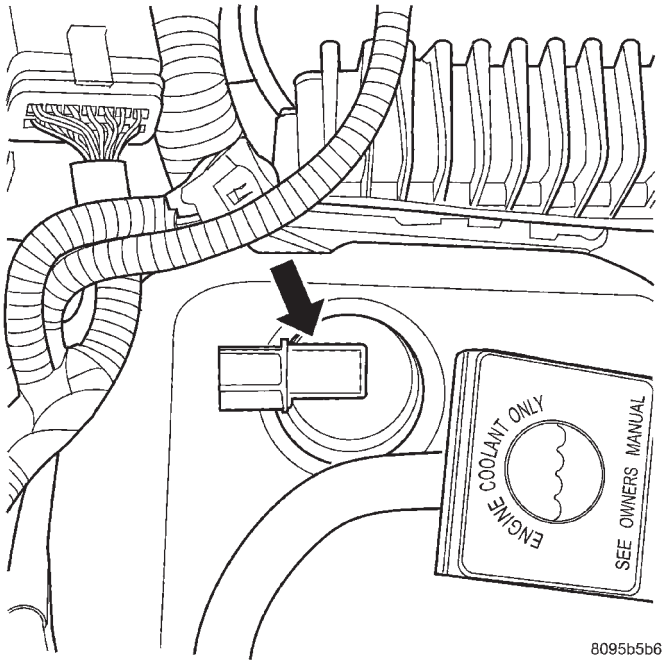

Fig. 2 Coolant Level Sensor Removal/Installation

INSTALLATION

NOTE: Make sure the coolant level sensor fully seats into the rubber grommet. Failure to do so may cause inaccurate coolant level readings and leaks.

(1) Position sensor into the coolant recovery pressure container (Fig. 1).

(2) Connect the coolant level sensor electrical connector (Fig. 2).

(3) Close hood.

COOLANT RECOVERY PRESS CONTAINER

DESCRIPTION

This system works along with the radiator pressure cap. This is done by using thermal expansion and contraction of the coolant to keep the coolant free of trapped air. It provides:

- A volume for coolant expansion and contraction.
- A convenient and safe method for checking/adjusting coolant level at atmospheric pressure. This is done without removing the radiator pressure cap.
- Some reserve coolant to the radiator to cover minor leaks and evaporation or boiling losses.

As the engine cools, a vacuum is formed in the cooling system of both the radiator and engine. Coolant will then be drawn from the coolant tank and returned to a proper level in the radiator.

The coolant reservoir/overflow system has a radiator mounted pressurized cap, an overflow tube and a plastic coolant reservoir/overflow tank (Fig. 3) mounted to the right inner fender.

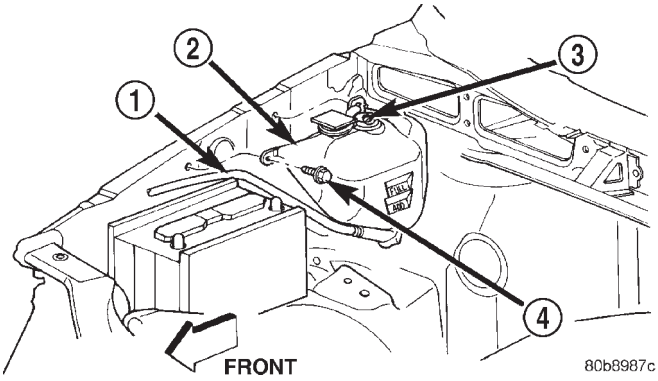

Fig. 3 Coolant Reservoir / Overflow Tank

1 - COOLANT OVERFLOW HOSE
2 - COOLANT RESERVOIR/OVERFLOW TANK
3 - COOLANT LEVEL SENSOR
4 - BOLT

RADIATOR FAN - 4.7L

DESCRIPTION

The hydraulic fan (Fig. 4) used on vehicles equipped the 4.7L engine, replaces both the electric fan and the engine driven mechanical fan. The hydraulic cooling fan is integral to the fan shroud and is located between the radiator and the engine.

The power steering pump supplies the hydraulic fluid and pressure to rotate the cooling fan blade, while the electrical part of the fan is controlled by the JTEC.

The hydraulic fan drive (motor) consists of the three major following components:

- Steering flow control valve
- Fan control valve
- Two stage G-rotor hydraulic drive

The hydraulic fan and drive is not serviceable. Therefore any failure of the fan blade, hydraulic fan drive or fan shroud requires replacement of the fan module because the fan blade and hydraulic fan drive are matched and balanced as a system and servicing either separately would disrupt this balance.

For hydraulic fluid routing information refer to (Fig. 5).

CAUTION: Do not attempt to service the hydraulic cooling fan or fan drive separately replace the cooling module as an assembly. Failure to do so may cause severe damage to the hydraulic cooling fan assembly.

RADIATOR FAN - 4.7L (Continued)

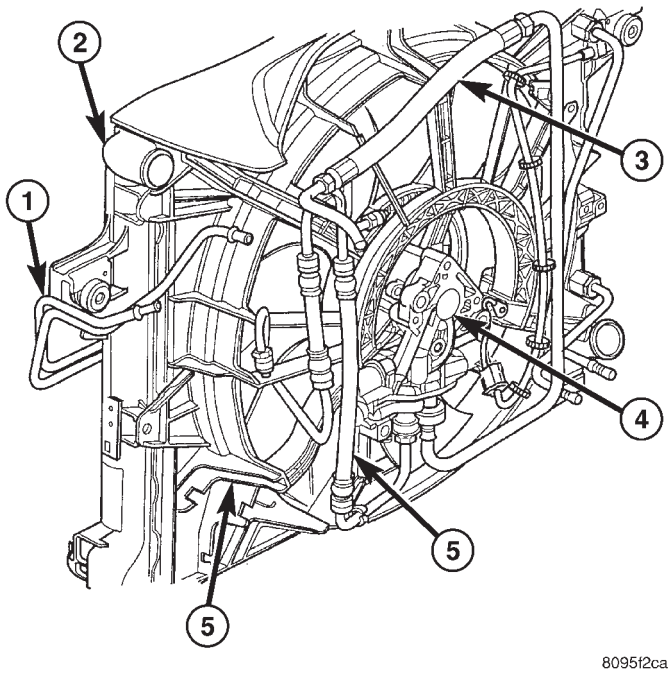

Fig. 4 Hydraulic Radiator Cooling Fan and Fan Drive

1 - POWER STEERING FLUID COOLER
2 - RADIATOR
3 - HIGH PRESSURE LINE FROM STEERING GEAR PUMP TO HYDRAULIC FAN MOTOR
4 - HYDRAULIC FAN MOTOR
5 - HIGH PRESSURE LINE FROM HYDRAULIC FAN MOTOR TO STEERING GEAR
6 - FAN SHROUD

OPERATION

The hydraulic radiator cooling fan used on the Grand Cherokee with the 4.7L engine replaces both the electric fan and the engine driven mechanical fan. The use of this hydraulic fan provides the 4.7L equipped Grand Cherokee with heavy trailer tow capability while at the same time reducing unnecessary power drain on both the engine and the vehicles electrical system.

HYDRAULIC FAN STRATEGY

The hydraulic radiator cooling fan is controlled by the JTEC. A PWM (Pulse With Modulated) signal from the JTEC controls the fan from 0 to 100% of the available fan speed. There are four inputs to the JTEC that determine what speed percentage of fan is required by the vehicle. These inputs are:

- Engine Coolant Temperature
- Transmission Oil Temperature
- Battery Temperature
- A/C System Pressure

By monitoring these four parameters, the JTEC can determine if cooling airflow is required. If airflow is required, the JTEC will slowly ramp up (speed up) the fan speed until the parameter(s) are under control. Once the temperature or pressure is reduced to within operating parameters the fan will ramp up, ramp down, or hold its speed to maintain the temperature / pressure requirements.

NOTE: Even if the JTEC is not requesting fan on operation the fan blade will spin between 100 and 500 RPM when the vehicle is at idle. This is due to a controlled minimum oil flow requirement through the fan drive motor.

RADIATOR COOLING FAN HYDRAULIC FLUID PATH

Hydraulic fluid is pumped through the power steering pump, from the pump the fluid travels though a high pressure delivery line to the fan drive motor. As fluid is diverted through the G-rotors, rotational motion is created as fluid moves from the high-pressure (inlet) side of the motor to the low-pressure (outlet) side. Fluid exiting the drive motor is divided into two paths. Path one continues through a high pressure delivery line to the vehicles steering gear to provide steering assist. and path two sends fluid back to the power steering pump through a low pressure line. Fluid exits the steering gear under low pressure and travels through a low pressure line to the in-line filter to filter out contaminants in the fluid. Fluid exits the in-line filter and continues through a low pressure line to the power steering fluid cooler to be cooled before being returned back the the power steering fluid reservoir (Fig. 5).

NOTE: There is a steering flow control valve located in the fan drive motor. This valve operates like the flow control valve found in the typical power steering pump. Because of the design of the valve steering assist can not be effected by the radiator cooling fan even during fan drive failure.

REMOVAL

(1) Raise vehicle on hoist.
(2) Drain cooling system. (Refer to 7 - COOLING - STANDARD PROCEDURE)

NOTE: The hydraulic fan drive is driven by the power steering pump. When removing lines or hoses from fan drive assembly use a drain pan to catch any power steering fluid that may exit the fan drive or the lines and hoses.

NOTE: When ever the high pressure line fittings are removed from the hydraulic fan drive the O-rings must be replaced.

RADIATOR FAN - 4.7L (Continued)

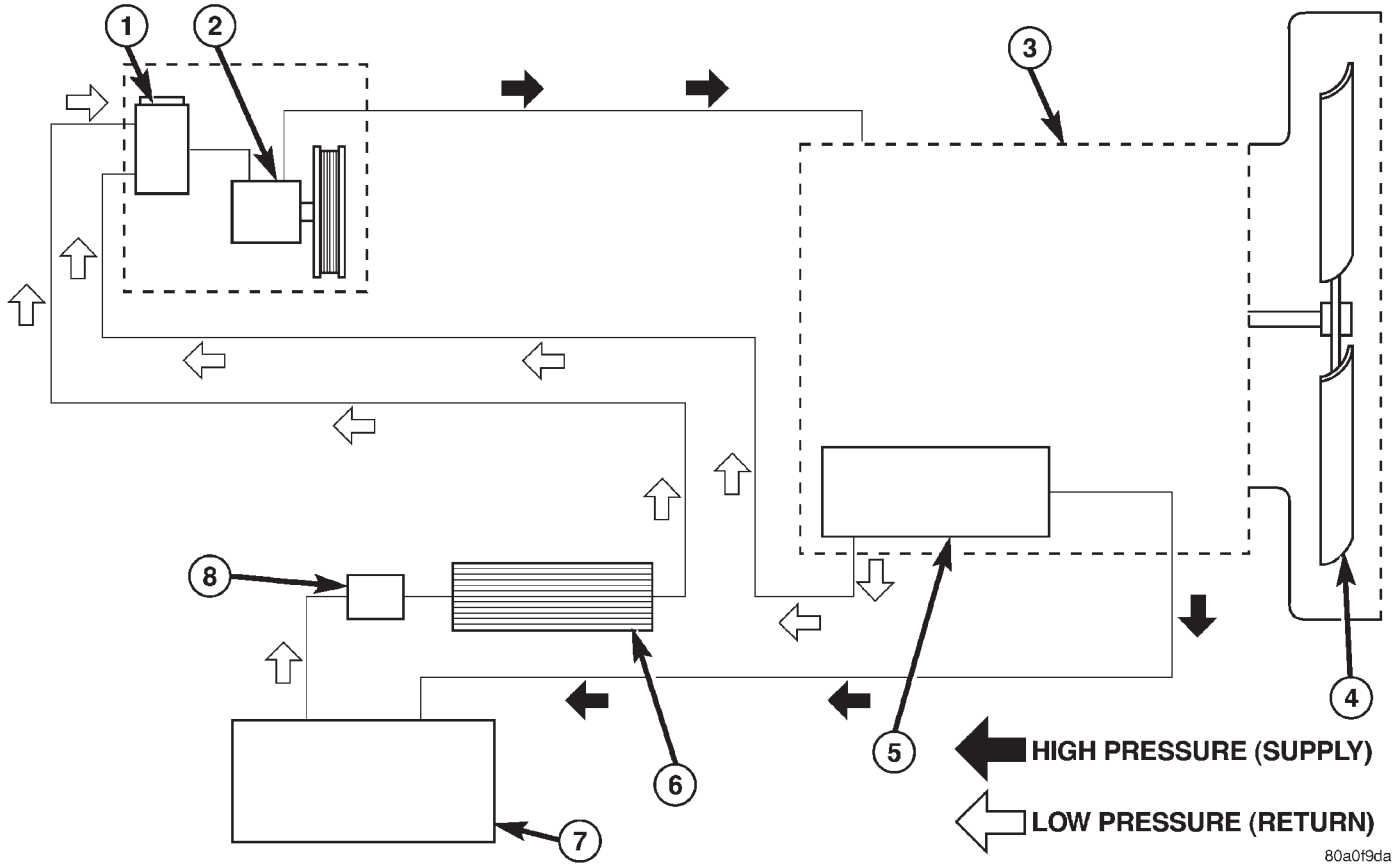

Fig. 5 Hydraulic Fan Fluid Flow Circuit

1 - POWER STEERING RESERVOIR
2 - POWER STEERING PUMP
3 - HYDRAULIC FAN DRIVE ASSEMBLY
4 - FAN BLADE
5 - HYDRAULIC FAN CONTROL SOLENOID
6 - POWER STEERING OIL COOLER
7 - STEERING GEAR
8 - POWER STEERING FLUID FILTER

(3) Disconnect two high pressure lines at hydraulic fan drive (Fig. 6). Remove and discard o-rings from line fittings.

(4) Disconnect low pressure return hose at hydraulic fan drive (Fig. 6).

NOTE: The lower mounting bolts can only be accessed from under vehicle.

(5) Remove two lower mounting bolts from the shroud (Fig. 8).

(6) Lower vehicle.

(7) Disconnect the electrical connector for the fan control solenoid.

(8) Disconnect the radiator upper hose at the radiator and position out of the way.

(9) Disconnect the power steering oil cooler filter hose and fluid return hose at the cooler (Fig. 7).

(10) Remove two upper mounting bolts from the shroud (Fig. 8).

(11) Remove the shroud and fan drive from vehicle.

CLEANING

Clean the fan blades using a mild soap and water. Do not use an abrasive to clean the blades.

INSTALLATION

CAUTION: There is an external ground wire connected to the hydraulic fan drive located at the electrical connector on the fan assembly. This ground MUST remain connected at all times. Failure to ensure ground wire is connected when engine is operating can cause severe damage to the JTEC module.

RADIATOR FAN - 4.7L (Continued)

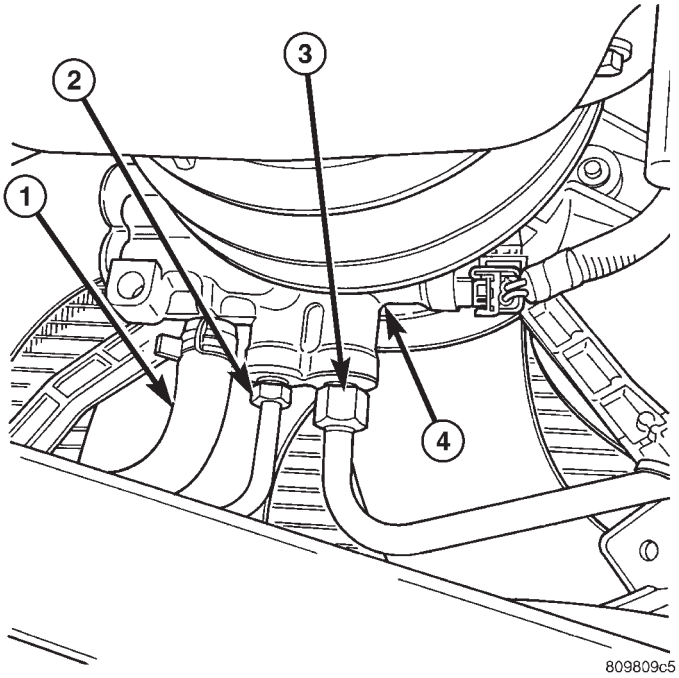

Fig. 6 Hydraulic Lines/Hoses and Electrical Connector

1 - LOW PRESSURE RETURN HOSE
2 - HIGH PRESSURE LINE (OUTLET)
3 - HIGH PRESSURE LINE (INLET)
4 - HYDRAULIC FAN DRIVE

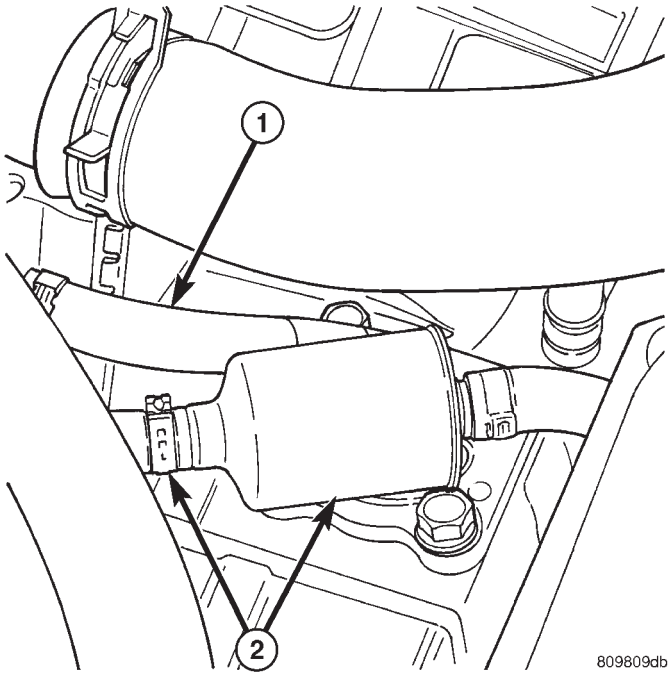

Fig. 7 Power Steering Cooler Filter and Hoses

1 - POWER STEERING COOLER RETURN HOSE
2 - POWER STEERING COOLER SUPPLY HOSE AND FILTER

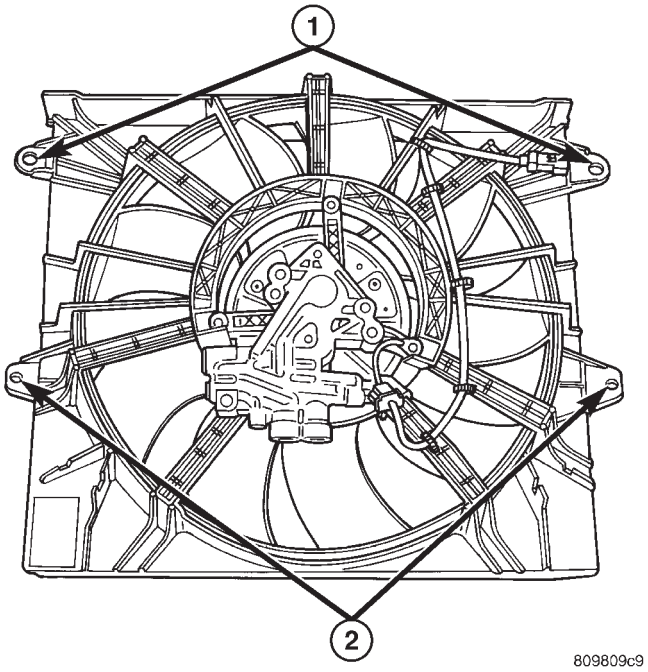

Fig. 8 Fan Shroud Mounting Bolt Locations

1 - FAN SHROUD UPPER MOUNTING BOLT LOCATIONS
2 - FAN SHROUD LOWER MOUNTING BOLT LOCATIONS

(1) Position fan drive and shroud in vehicle.
(2) Install fan shroud upper mounting bolts. Do not tighten at this time.
(3) Install radiator upper hose onto radiator.
(4) Connect power steering cooler hoses.
(5) Raise vehicle on hoist.
(6) Install fan shroud lower mounting bolts. Tighten to 6 N·m (50 in. lbs.).

NOTE: When ever the high pressure line fittings are removed from the hydraulic fan drive the o-rings located on the fittings must be replaced.

(7) Lubricate the o-rings on the fittings with power steering fluid then connect inlet and outlet high pressure lines to fan drive (Fig. 9). Tighten inlet line to 49 N·m (36 ft. lbs.) tighten outlet line to 29 N·m (21.5 ft. lbs.).
(8) Connect low pressure return hose to fan drive (Fig. 9).
(9) Lower vehicle.
(10) Install radiator upper hose.
(11) Connect electrical connector for hydraulic fan control solenoid.
(12) Tighten fan shroud upper mounting bolts to 6 N·m (50 in. lbs.).
(13) Refill cooling system (Refer to 7 - COOLING - STANDARD PROCEDURE).

RADIATOR FAN - 4.7L (Continued)

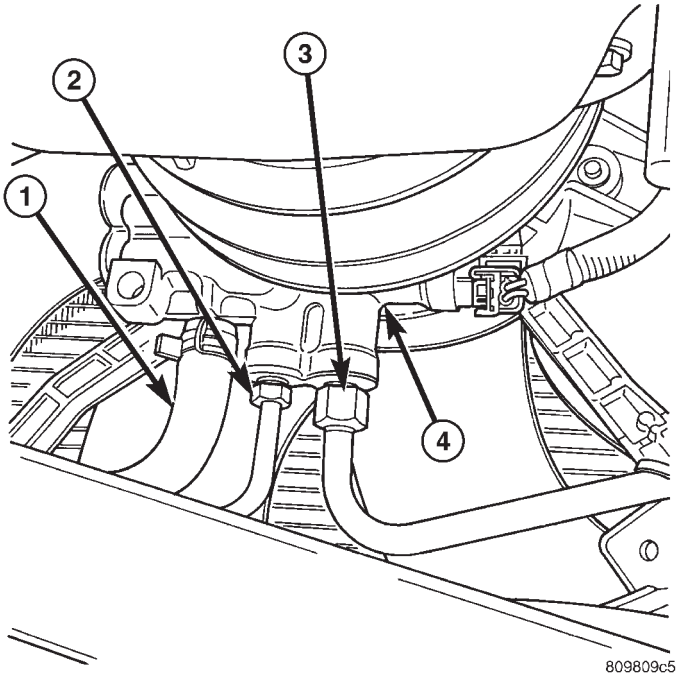

Fig. 9 Hydraulic Lines/Hoses and Electrical Connector

1 - LOW PRESSURE RETURN HOSE
2 - HIGH PRESSURE LINE (OUTLET)
3 - HIGH PRESSURE LINE (INLET)
4 - HYDRAULIC FAN DRIVE

CAUTION: Do not run engine with power steering fluid below the full mark in the reservoir. Sever damage to the hydraulic cooling fan or the engine can occur.

(14) Refill power steering fluid reservoir and bleed air from steering system (Refer to 19 - STEERING/ PUMP - STANDARD PROCEDURE).

(15) Run engine and check for leaks.

RADIATOR FAN - 4.0L

DESCRIPTION

The radiator cooling fan used on the 4.0L engine is an hybrid fan design. The hybrid fan system consist of a low speed viscous driven mechanical fan and a electrical fan (Fig. 10).

REMOVAL

(1) Disconnect negative battery cable from battery.

(2) The thermal viscous fan drive/fan blade assembly is attached (threaded) to water pump hub shaft. Remove fan blade/viscous fan drive assembly from water pump by turning mounting nut counterclockwise as viewed from front (Fig. 11). Threads on viscous fan drive are **RIGHT HAND.**

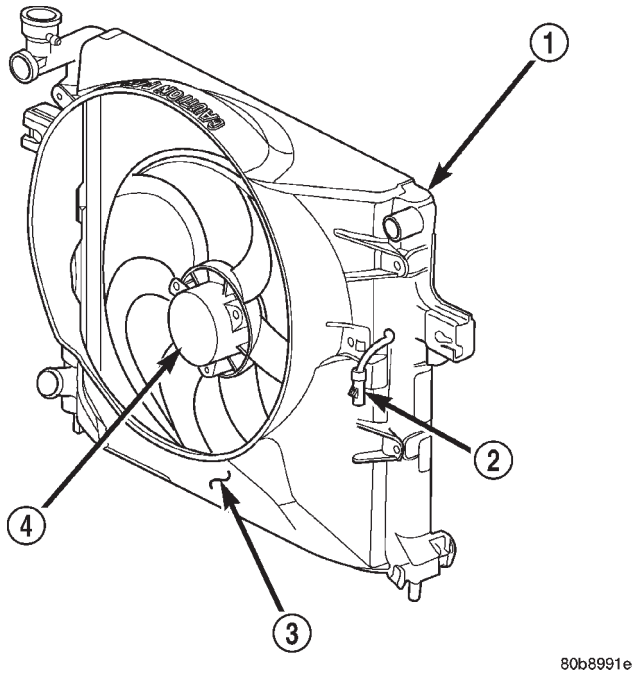

Fig. 10 Radiator Cooling Fan

1 - RADIATOR
2 - ELECTRIC COOLING FAN CONNECTOR
3 - FAN SHROUD
4 - ELECTRIC COOLING FAN

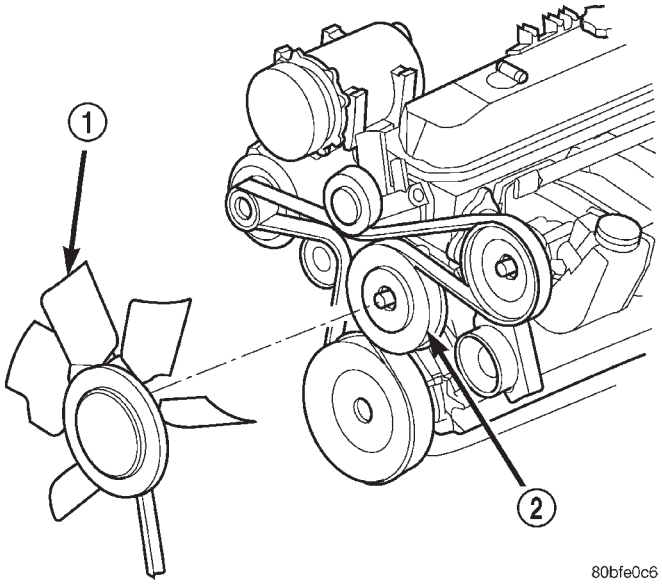

Fig. 11 Fan and Viscous Fan Drive

1 - FAN AND FAN DRIVE
2 - WATER PUMP PULLEY

(3) Do not attempt to remove fan/viscous fan drive assembly from vehicle at this time.

(4) Do not unbolt fan blade assembly from viscous fan drive at this time.

(5) Remove fan shroud-to-upper crossmember nuts.

RADIATOR FAN - 4.0L (Continued)

(6) Remove fan shroud and fan blade/viscous fan drive assembly as a complete unit from vehicle.

(7) After removing fan blade/viscous fan drive assembly, **do not** place viscous fan drive in horizontal position. If stored horizontally, silicone fluid in the viscous fan drive could drain into its bearing assembly and contaminate lubricant.

CAUTION: Do not remove water pump pulley-to-water pump bolts . This pulley is under belt tension.

(8) Remove four bolts securing fan blade assembly to viscous fan drive .

CLEANING

Clean the fan blades using a mild soap and water. Do not use an abrasive to clean the blades.

INSPECTION

WARNING: DO NOT ATTEMPT TO BEND OR STRAIGHTEN FAN BLADES IF FAN IS NOT WITHIN SPECIFICATIONS.

CAUTION: If fan blade assembly is replaced because of mechanical damage, water pump and viscous fan drive should also be inspected. These components could have been damaged due to excessive vibration.

(1) Remove fan blade assembly from viscous fan drive unit (four bolts).

(2) Lay fan on a flat surface with leading edge facing down. With tip of blade touching flat surface, replace fan if clearance between opposite blade and surface is greater than 2.0 mm (.090 inch). Rocking motion of opposite blades should not exceed 2.0 mm (.090 inch). Test all blades in this manner.

(3) Inspect fan assembly for cracks, bends, loose rivets or broken welds. Replace fan if any damage is found.

INSTALLATION

(1) Assemble fan blade to viscous fan drive. Tighten mounting bolts to 27 N·m (20 ft. lbs.) torque.

(2) Thread the fan and fan drive onto the water pump pulley.

CAUTION: When installing a serpentine accessory drive belt, the belt MUST be routed correctly. If not, the engine may overheat due to the water pump rotating in the wrong direction. (Refer to 7 - COOLING/ACCESSORY DRIVE/DRIVE BELTS - REMOVAL) for correct belt routing.

ENGINE BLOCK HEATER

DESCRIPTION—4.7L ENGINE

WARNING: DO NOT OPERATE ENGINE UNLESS BLOCK HEATER CORD HAS BEEN DISCONNECTED FROM POWER SOURCE AND SECURED IN PLACE. THE POWER CORD MUST BE SECURED IN ITS RETAINING CLIPS AND ROUTED AWAY FROM EXHAUST MANIFOLDS AND MOVING PARTS.

An optional engine block heater (Fig. 12) is available with all models. The heater is equipped with a power cord. The cord is attached to an engine compartment component with tie-straps. The heater warms the engine providing easier engine starting and faster warm-up in low temperatures. The heater is mounted in a core hole of the engine cylinder block in place of a freeze plug with the heating element immersed in engine coolant.

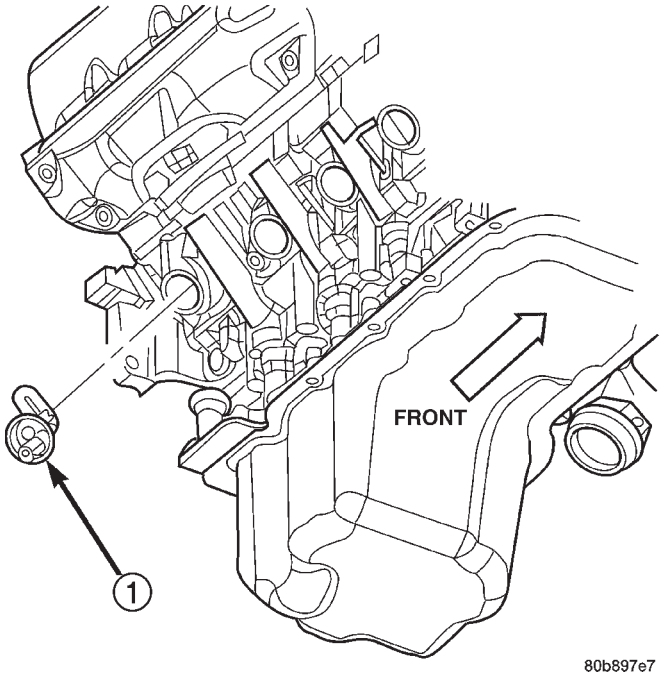

Fig. 12 Block Heater—4.7L

1 - ENGINE BLOCK HEATER

DESCRIPTION—4.0L ENGINE

WARNING: DO NOT OPERATE ENGINE UNLESS BLOCK HEATER CORD HAS BEEN DISCONNECTED FROM POWER SOURCE AND SECURED IN PLACE. THE POWER CORD MUST BE SECURED IN ITS RETAINING CLIPS AND ROUTED AWAY FROM EXHAUST MANIFOLDS AND MOVING PARTS.

ENGINE BLOCK HEATER (Continued)

An optional engine block heater (Fig. 13) is available with all models. The heater is equipped with a power cord. The cord is attached to an engine compartment component with tie-straps. The heater warms the engine providing easier engine starting and faster warm-up in low temperatures. The heater is mounted in a core hole of the engine cylinder block in place of a freeze plug with the heating element immersed in engine coolant.

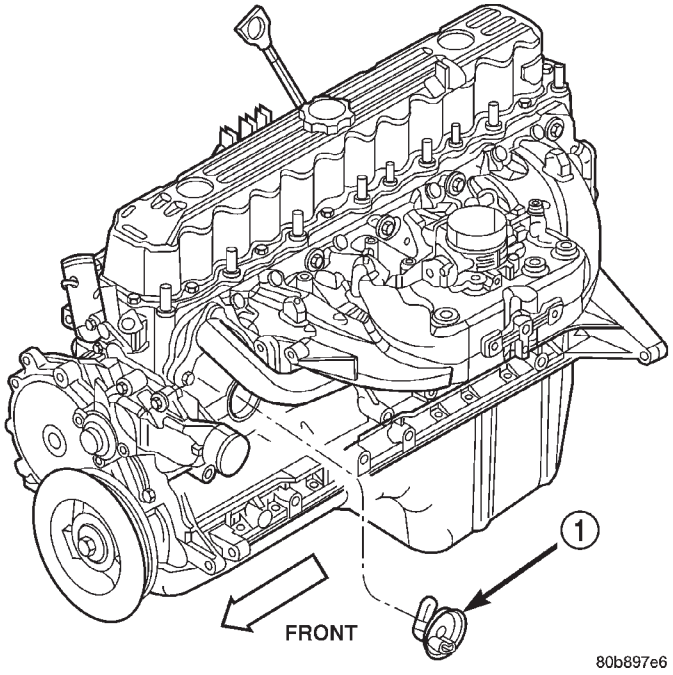

Fig. 13 Block Heater

1 - ENGINE BLOCK HEATER

OPERATION

Connecting the power cord to a grounded 110-120 volt AC electrical outlet with a grounded, three wire extension cord activates the heating element warming the engine coolant.

DIAGNOSIS AND TESTING—ENGINE BLOCK HEATER

If the unit does not operate (Fig. 14) (Fig. 15), possible causes can be either the power cord or the heater element. Test the power cord for continuity with a 110-volt voltmeter or 110-volt test light. Test heater element continuity with an ohmmeter or a 12-volt test light.

CAUTION: To prevent damage, the power cord must be secured in it's retainer clips and away from any components that may cause abrasion or damage, such as linkages, exhaust components, etc.

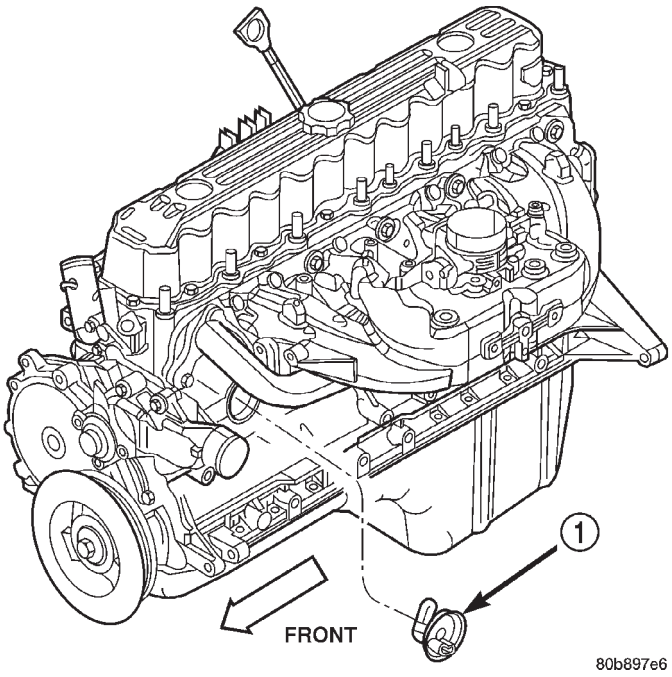

Fig. 14 Engine Block Heater 4.0L Engine

1 - ENGINE BLOCK HEATER

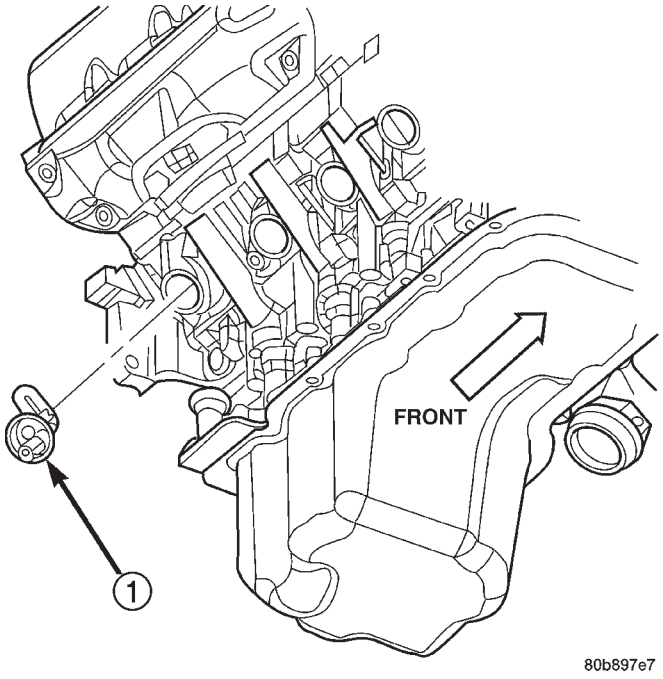

Fig. 15 Engine Block Heater 4.7L Engine

1 - ENGINE BLOCK HEATER

REMOVAL—4.7L ENGINE

(1) Disconnect negative battery cable from battery.

(2) Drain coolant from radiator (Refer to 7 - COOLING - STANDARD PROCEDURE).

(3) Raise vehicle.

ENGINE BLOCK HEATER (Continued)

(4) Remove engine cylinder block drain plug(s) located on the sides of cylinder block above the oil pan rail (Fig. 16).

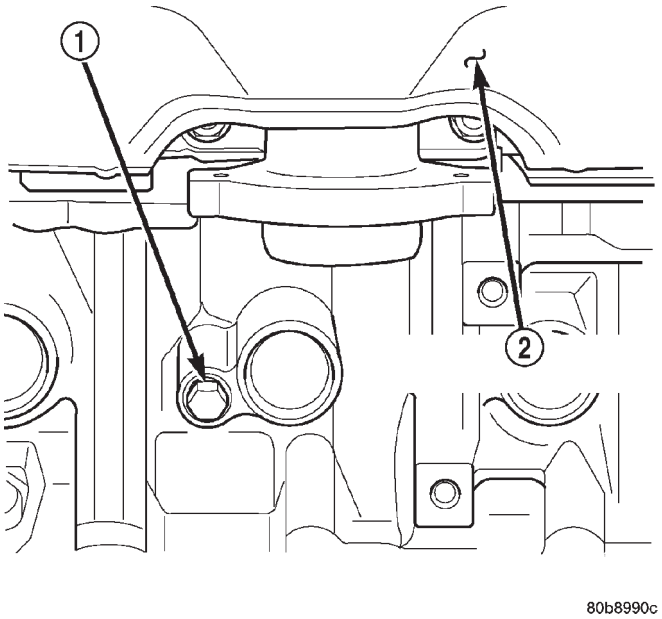

Fig. 16 Drain Plug - 4.7L Engine

1 - CYLINDER BLOCK DRAIN PLUG
2 - EXHAUST MANIFOLD AND HEAT SHIELD

(5) Remove power cord from block heater.

(6) Loosen screw at center of block heater. Remove heater assembly (Fig. 17).

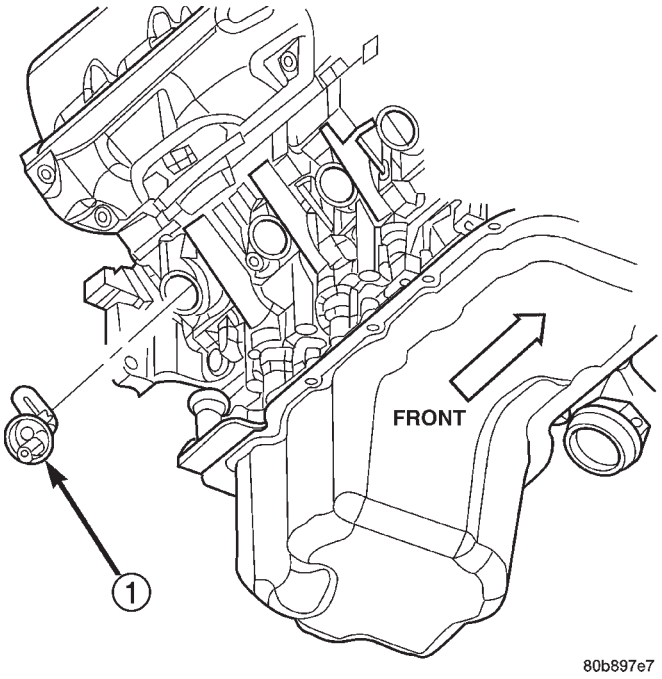

Fig. 17 Engine Block Heater - 4.7L

1 - ENGINE BLOCK HEATER

REMOVAL—4.0L ENGINE

(1) Disconnect negative battery cable from battery.

(2) Drain coolant from radiator (Refer to 7 - COOLING - STANDARD PROCEDURE).

(3) Raise vehicle.

(4) Remove engine cylinder block drain plug(s) located on the sides of cylinder block above the oil pan rail (Fig. 18).

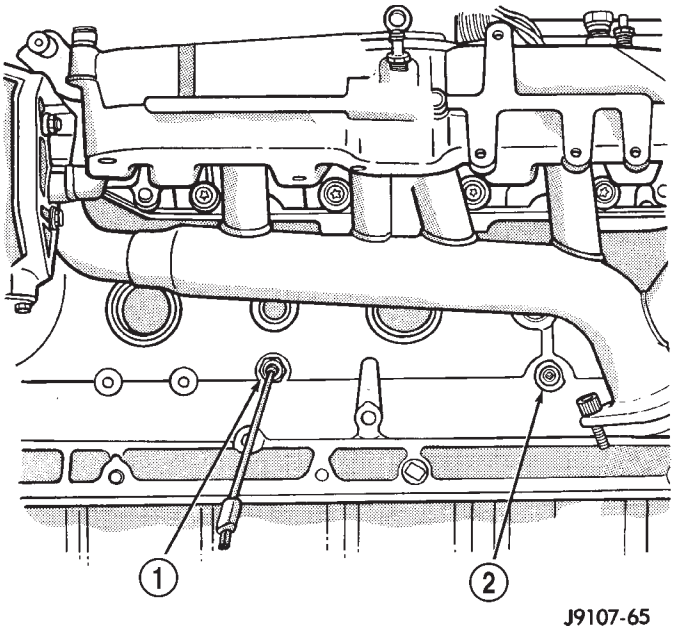

Fig. 18 Drain Plug

1 - COOLANT TEMPERATURE SENSOR
2 - BLOCK DRAIN PLUG

(5) Remove power cord from block heater.

(6) Loosen screw at center of block heater. Remove heater assembly (Fig. 19).

INSTALLATION—4.7L ENGINE

(1) Thoroughly clean cylinder block core hole and block heater seat.

(2) Insert block heater assembly with element loop pointing at twelve o'clock (Fig. 17).

(3) With block heater fully seated, tighten center screw to 2 N·m (17 in. lbs.) torque.

(4) Refill cooling system (Refer to 7 - COOLING - STANDARD PROCEDURE).

(5) Start and warm the engine. Check for leaks.

INSTALLATION—4.0L ENGINE

(1) Thoroughly clean cylinder block core hole and block heater seat.

(2) Insert block heater assembly with element loop pointing at twelve o'clock (Fig. 19).

(3) With block heater fully seated, tighten center screw to 2 N·m (17 in. lbs.) torque.

ENGINE BLOCK HEATER (Continued)

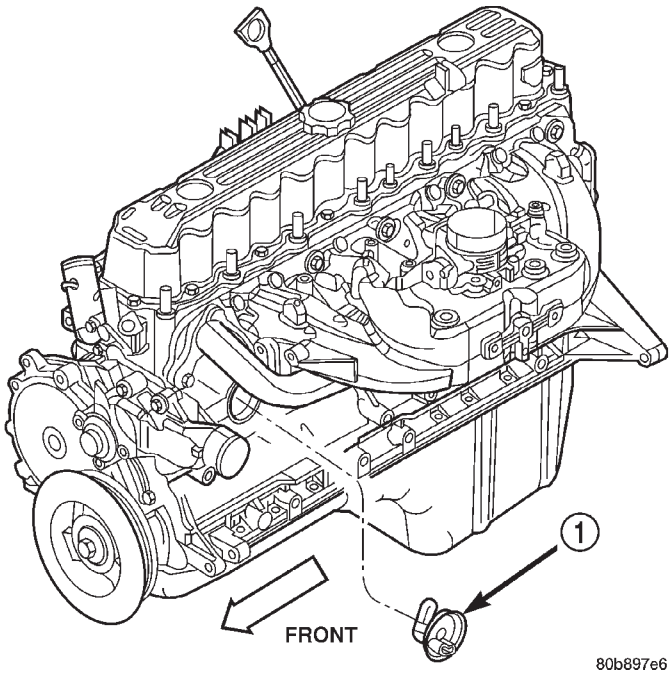

Fig. 19 Engine Block Heater

1 - ENGINE BLOCK HEATER

(4) Refill cooling system (Refer to 7 - COOLING - STANDARD PROCEDURE).

(5) Start and warm the engine. Check for leaks.

ENGINE COOLANT TEMP SENSOR

DESCRIPTION

The Engine Coolant Temperature (ECT) sensor is used to sense engine coolant temperature. The sensor protrudes into an engine water jacket.

The ECT sensor is a two-wire Negative Thermal Coefficient (NTC) sensor. Meaning, as engine coolant temperature increases, resistance (voltage) in the sensor decreases. As temperature decreases, resistance (voltage) in the sensor increases.

OPERATION

At key-on, the Powertrain Control Module (PCM) sends out a regulated 5 volt signal to the ECT sensor. The PCM then monitors the signal as it passes through the ECT sensor to the sensor ground (sensor return).

When the engine is cold, the PCM will operate in Open Loop cycle. It will demand slightly richer air-fuel mixtures and higher idle speeds. This is done until normal operating temperatures are reached.

The PCM uses inputs from the ECT sensor for the following calculations:

- for engine coolant temperature gauge operation through CCD or PCI (J1850) communications
- Injector pulse-width
- Spark-advance curves
- ASD relay shut-down times
- Idle Air Control (IAC) motor key-on steps
- Pulse-width prime-shot during cranking
- O2 sensor closed loop times
- Purge solenoid on/off times
- EGR solenoid on/off times (if equipped)
- Leak Detection Pump operation (if equipped)
- Radiator fan relay on/off times (if equipped)
- Target idle speed

REMOVAL—4.0L ENGINE

WARNING: HOT, PRESSURIZED COOLANT CAN CAUSE INJURY BY SCALDING. COOLING SYSTEM MUST BE PARTIALLY DRAINED BEFORE REMOVING THE ENGINE COOLANT TEMPERATURE (ECT) SENSOR. REFER TO GROUP 7, COOLING.

(1) Partially drain cooling system. (Refer to 7 - COOLING - STANDARD PROCEDURE).

(2) Disconnect electrical connector from ECT sensor (Fig. 20).

(3) Remove sensor from thermostat housing.

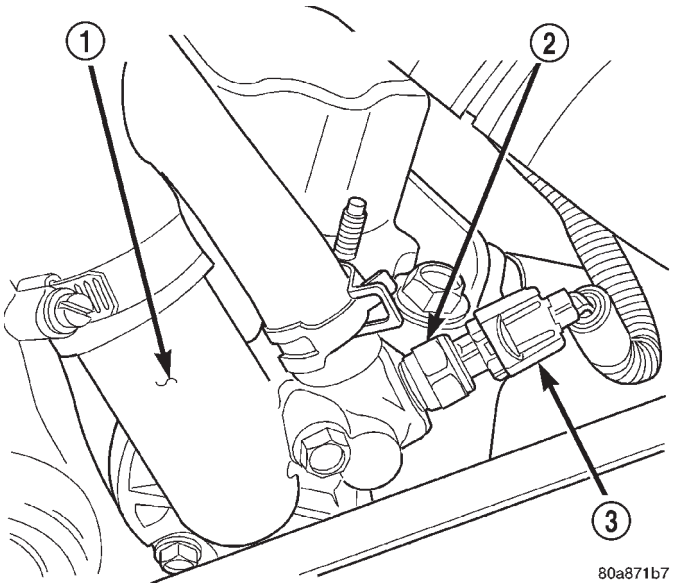

Fig. 20 Engine Coolant Temperature Sensor

1 - THERMOSTAT HOUSING
2 - ENGINE COOLANT TEMPERATURE SENSOR
3 - ELECTRICAL CONNECTOR

ENGINE COOLANT TEMP SENSOR (Continued)

REMOVAL—4.7L ENGINE

WARNING: HOT, PRESSURIZED COOLANT CAN CAUSE INJURY BY SCALDING. COOLING SYSTEM MUST BE PARTIALLY DRAINED BEFORE REMOVING THE ENGINE COOLANT TEMPERATURE (ECT) SENSOR. REFER TO GROUP 7, COOLING.

The ECT sensor is located near the front of the intake manifold (Fig. 21).

(1) Partially drain cooling system. (Refer to 7 - COOLING - STANDARD PROCEDURE).

(2) Disconnect electrical connector from ECT sensor.

(3) Remove sensor from intake manifold.

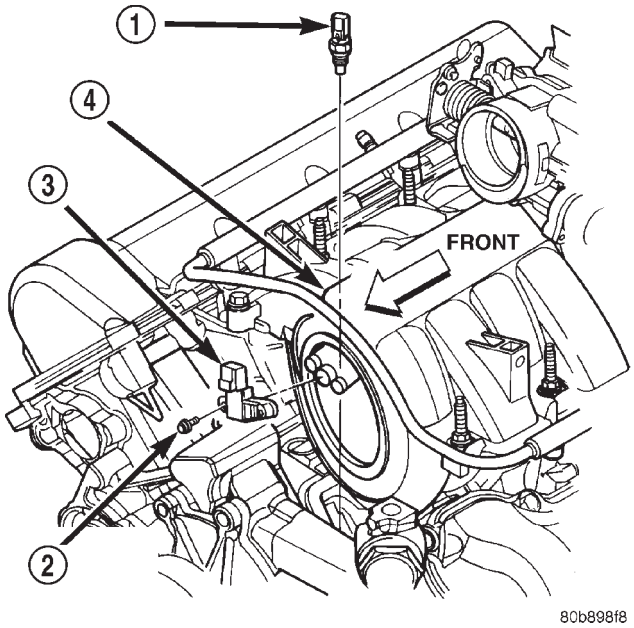

Fig. 21 Engine Coolant Temperature Sensor

1 - ECT SENSOR
2 - MOUNTING BOLTS (2)
3 - MAP SENSOR
4 - INTAKE MANIFOLD

INSTALLATION—4.0L ENGINE

(1) Install sensor.

(2) Tighten to 11 N·m (8 ft. lbs.) torque.

(3) Connect electrical connector to sensor.

(4) Replace any lost engine coolant. (Refer to 7 - COOLING - STANDARD PROCEDURE).

INSTALLATION—4.7L ENGINE

(1) Install sensor.

(2) Tighten to 11 N·m (8 ft. lbs.) torque.

(3) Connect electrical connector to sensor.

(4) Replace any lost engine coolant. (Refer to 7 - COOLING - STANDARD PROCEDURE).

ENGINE COOLANT THERMOSTAT

DESCRIPTION—4.7L ENGINE

CAUTION: Do not operate an engine without a thermostat, except for servicing or testing.

A pellet-type thermostat controls the operating temperature of the engine by controlling the amount of coolant flow to the radiator. On all engines the thermostat is closed below 195°F (90°C). Above this temperature, coolant is allowed to flow to the radiator. This provides quick engine warm up and overall temperature control. On the 4.7L engine the thermostat is designed to block the flow of the coolant bypass journal by 50% instead of completely blocking the flow. This design controls coolant temperature more accurately (Fig. 22).

The same thermostat is used for winter and summer seasons. An engine should not be operated without a thermostat, except for servicing or testing. Operating without a thermostat causes other problems. These are: longer engine warmup time, unreliable warmup performance, increased exhaust emissions and crankcase condensation. This condensation can result in sludge formation.

DESCRIPTION—4.0L ENGINE

CAUTION: Do not operate an engine without a thermostat, except for servicing or testing.

A pellet-type thermostat controls the operating temperature of the engine by controlling the amount of coolant flow to the radiator. On all engines the thermostat is closed below 195°F (90°C). Above this temperature, coolant is allowed to flow to the radiator. This provides quick engine warm up and overall temperature control. (Fig. 23).

The same thermostat is used for winter and summer seasons. An engine should not be operated without a thermostat, except for servicing or testing. Operating without a thermostat causes other problems. These are: longer engine warmup time, unreliable warmup performance, increased exhaust emissions and crankcase condensation. This condensation can result in sludge formation.

OPERATION

The wax pellet is located in a sealed container at the spring end of the thermostat. When heated, the pellet expands, overcoming closing spring tension and water pump pressure to force the valve to open.

ENGINE COOLANT THERMOSTAT (Continued)

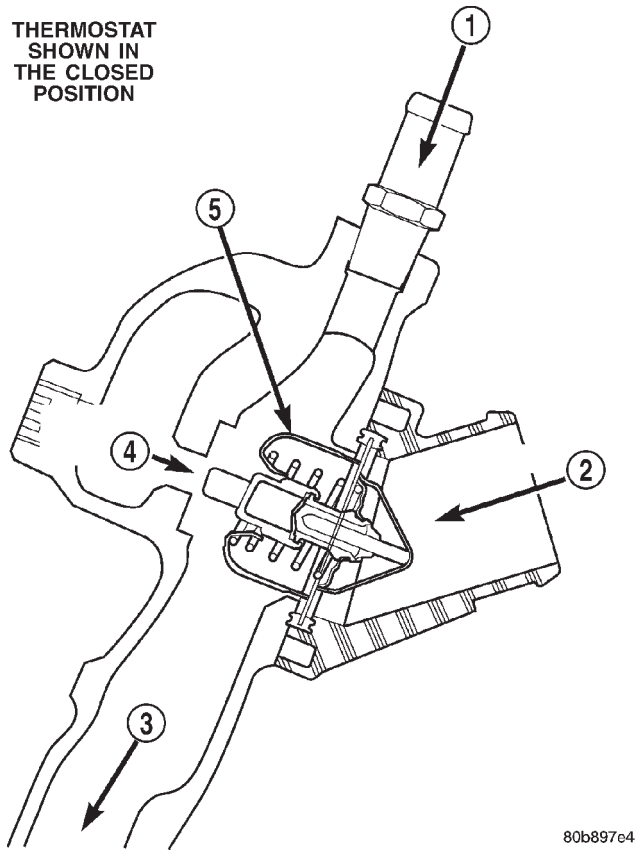

Fig. 22 Thermostat

1 - FROM HEATER
2 - FROM RADIATOR
3 - TO WATER PUMP
4 - ENGINE BYPASS
5 - THERMOSTAT

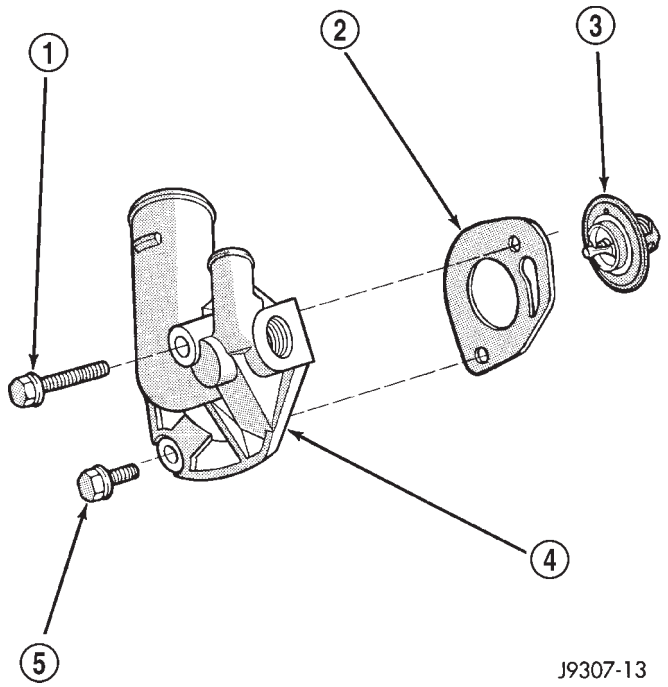

Fig. 23 Thermostat and Housing

1 - LONG BOLT
2 - GASKET
3 - THERMOSTAT
4 - THERMOSTAT HOUSING
5 - SHORT BOLT

DIAGNOSIS AND TESTING—THERMOSTAT

ON-BOARD DIAGNOSTICS

All models are equipped with On-Board Diagnostics for certain cooling system components.If the powertrain control module (PCM) detects low engine coolant temperature, it will record a Diagnostic Trouble Code (DTC). For other DTC numbers, (Refer to 25 - EMISSIONS CONTROL - DESCRIPTION).

The DTC can also be accessed through the DRB scan tool.

REMOVAL—4.0L ENGINE

WARNING: DO NOT LOOSEN THE RADIATOR DRAINCOCK WITH THE SYSTEM HOT AND PRESSURIZED. SERIOUS BURNS FROM THE COOLANT CAN OCCUR.

Do not waste reusable coolant. If the solution is clean, drain the coolant into a clean container for reuse.

(1) Drain the coolant from the radiator until the level is below the thermostat housing (Refer to 7 - COOLING - STANDARD PROCEDURE).

WARNING: CONSTANT TENSION HOSE CLAMPS ARE USED ON MOST COOLING SYSTEM HOSES. WHEN REMOVING OR INSTALLING, USE ONLY TOOLS DESIGNED FOR SERVICING THIS TYPE OF CLAMP, SUCH AS SPECIAL CLAMP TOOL (NUMBER 6094) (Fig. 52). SNAP-ON CLAMP TOOL (NUMBER HPC-20) MAY BE USED FOR LARGER CLAMPS. ALWAYS WEAR SAFETY GLASSES WHEN SERVICING CONSTANT TENSION CLAMPS.

CAUTION: A number or letter is stamped into the tongue of constant tension clamps. If replacement is necessary, use only an original equipment clamp with matching number or letter.

(2) Remove radiator upper hose and heater hose at thermostat housing.

(3) Disconnect wiring connector at engine coolant temperature sensor.

(4) Remove thermostat housing mounting bolts, thermostat housing, gasket and thermostat (Fig. 24). Discard old gasket.

(5) Clean the gasket mating surfaces.

ENGINE COOLANT THERMOSTAT (Continued)

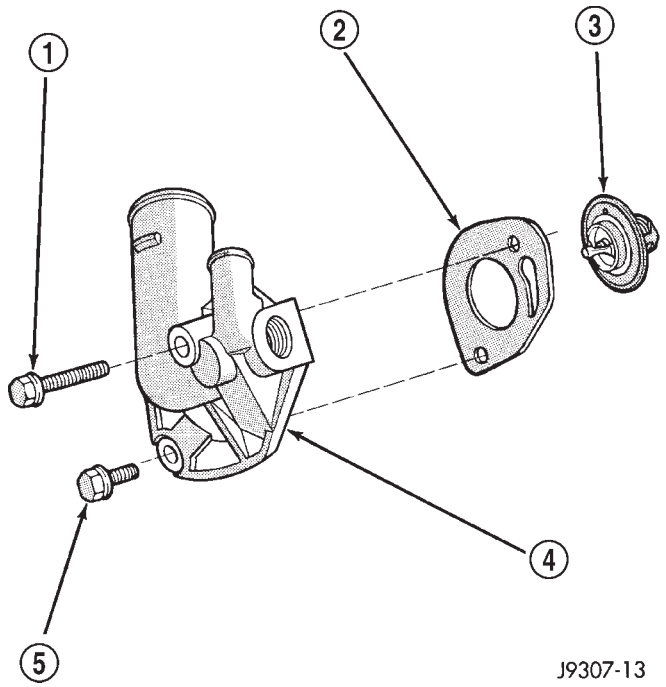

Fig. 24 Thermostat

1 - LONG BOLT
2 - GASKET
3 - THERMOSTAT
4 - THERMOSTAT HOUSING
5 - SHORT BOLT

REMOVAL—4.7L ENGINE

WARNING: DO NOT LOOSEN RADIATOR DRAIN-COCK WITH SYSTEM HOT AND PRESSURIZED. SERIOUS BURNS FROM COOLANT CAN OCCUR.

Do not waste reusable coolant. If solution is clean, drain coolant into a clean container for reuse.

If thermostat is being replaced, be sure that replacement is specified thermostat for vehicle model and engine type.

(1) Disconnect negative battery cable at battery.

(2) Drain cooling system (Refer to 7 - COOLING - STANDARD PROCEDURE).

(3) Raise vehicle on hoist.

(4) Remove splash shield.

(5) Remove lower radiator hose clamp and lower radiator hose at thermostat housing.

(6) Remove thermostat housing mounting bolts, thermostat housing and thermostat (Fig. 25).

INSTALLATION—4.0L ENGINE

(1) Install the replacement thermostat so that the pellet, which is encircled by a coil spring, faces the engine. All thermostats are marked on the outer flange to indicate the proper installed position.

(a) Observe the recess groove in the engine cylinder head (Fig. 26).

(b) Position thermostat in groove with arrow and air bleed hole on outer flange pointing up.

(2) Install replacement gasket and thermostat housing.

CAUTION: Tightening the thermostat housing unevenly or with the thermostat out of its recess, may result in a cracked housing.

(3) Tighten the housing bolts to 22 N·m (16 ft. lbs.) torque.

(4) Install hoses to thermostat housing.

(5) Install electrical connector to coolant temperature sensor.

(6) Be sure that the radiator draincock is tightly closed. Fill the cooling system to the correct level with the required coolant mixture (Refer to 7 - COOLING - STANDARD PROCEDURE).

(7) Start and warm the engine. Check for leaks.

INSTALLATION—4.7L ENGINE

(1) Clean mating areas of timing chain cover and thermostat housing.

(2) Install thermostat (spring side down) into recessed machined groove on timing chain cover (Fig. 25).

(3) Position thermostat housing on timing chain cover.

(4) Install two housing-to-timing chain cover bolts. Tighten bolts to 13 N·m (115 in. lbs.) torque.

CAUTION: Housing must be tightened evenly and thermostat must be centered into recessed groove in timimg chain cover. If not, it may result in a cracked housing, damaged timing chain cover threads or coolant leaks.

(5) Install lower radiator hose on thermostat housing.

(6) Install splash shield.

(7) Lower vehicle.

(8) Fill cooling system (Refer to 7 - COOLING - STANDARD PROCEDURE).

(9) Connect negative battery cable to battery.

(10) Start and warm the engine. Check for leaks.

ENGINE COOLANT THERMOSTAT (Continued)

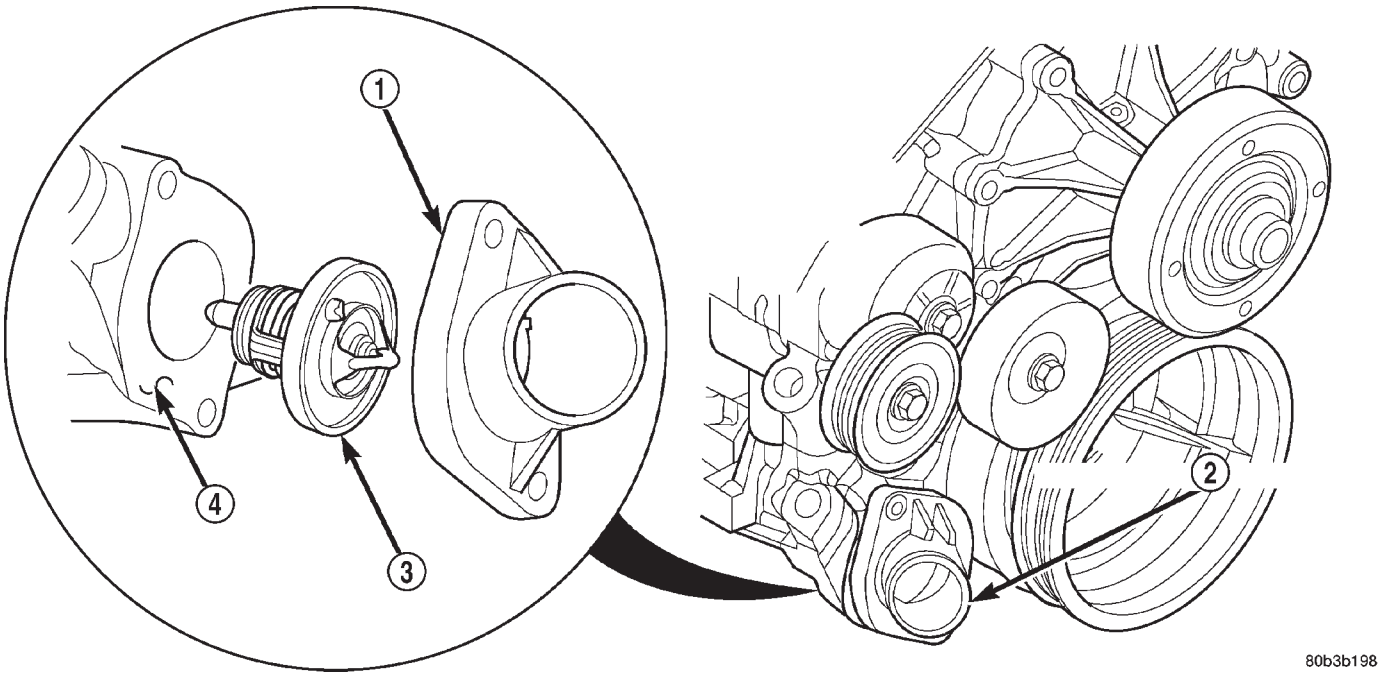

Fig. 25 Thermostat and Thermostat Housing

1 - THERMOSTAT HOUSING
2 - THERMOSTAT LOCATION
3 - THERMOSTAT AND GASKET
4 - TIMING CHAIN COVER

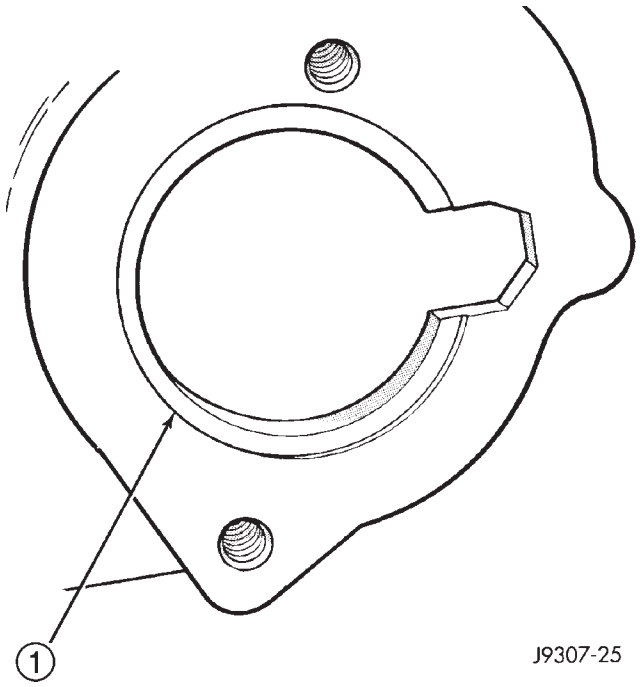

Fig. 26 Thermostat Recess

1 - GROOVE

FAN DRIVE VISCOUS CLUTCH - 4.0L

DESCRIPTION

CAUTION: Engines equipped with serpentine drive belts have reverse rotating fans and viscous fan drives. They are marked with the word REVERSE to designate their usage. Installation of the wrong fan or viscous fan drive can result in engine overheating.

CAUTION: If the viscous fan drive is replaced because of mechanical damage, the cooling fan blades should also be inspected. Inspect for fatigue cracks, loose blades, or loose rivets that could have resulted from excessive vibration. Replace fan blade assembly if any of these conditions are found. Also inspect water pump bearing and shaft assembly for any related damage due to a viscous fan drive malfunction.

The thermal viscous fan drive (Fig. 27) is a silicone-fluid-filled coupling used to connect the fan blades to the water pump shaft. The coupling allows

FAN DRIVE VISCOUS CLUTCH - 4.0L (Continued)

the fan to be driven in a normal manner. This is done at low engine speeds while limiting the top speed of the fan to a predetermined maximum level at higher engine speeds.

An electrical cooling fan located in the fan shroud aids in low speed cooling, It is designed to augment the viscous fan, However, it does not replace the viscous fan.

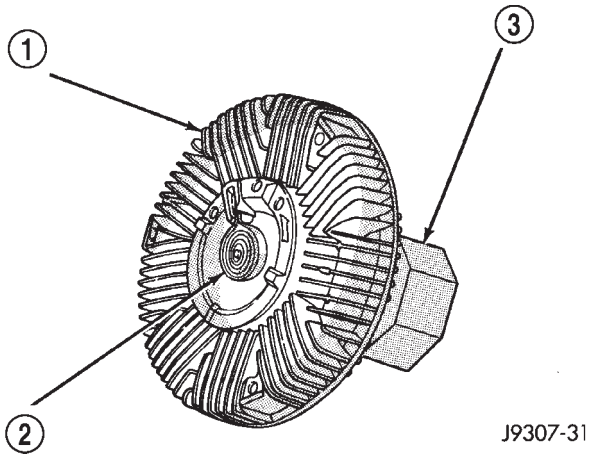

Fig. 27 Viscous Fan Drive

1 - VISCOUS FAN DRIVE
2 - THERMOSTATIC SPRING
3 - MOUNTING NUT TO WATER PUMP HUB

OPERATION

A thermostatic bimetallic spring coil is located on the front face of the viscous fan drive unit (Fig. 27) . This spring coil reacts to the temperature of the radiator discharge air. It engages the viscous fan drive for higher fan speed if the air temperature from the radiator rises above a certain point. Until additional engine cooling is necessary, **the fan will remain at a reduced rpm regardless of engine speed. Normally less than three hundred (300) rpm.**

Only when sufficient heat is present, will the viscous fan drive engage. This is when the air flowing through the radiator core causes a reaction to the bimetallic coil. It then increases fan speed to provide the necessary additional engine cooling.

Once the engine has cooled, the radiator discharge temperature will drop. The bimetallic coil again reacts and the fan speed is reduced to the previous disengaged speed.

DIAGNOSIS AND TESTING—VISCOUS FAN DRIVE

If the fan assembly free-wheels without drag (the fan blades will revolve more than five turns when spun by hand), replace the fan drive. This spin test must be performed when the engine is cool.

For the following test, the cooling system must be in good condition. It also will ensure against excessively high coolant temperature.

WARNING: BE SURE THAT THERE IS ADEQUATE FAN BLADE CLEARANCE BEFORE DRILLING.

(1) Drill a 3.18-mm (1/8-in) diameter hole in the top center of the fan shroud.

(2) Obtain a dial thermometer with an 8 inch stem (or equivalent). It should have a range of -18° to 105°C (0° to 220° F). Insert thermometer through the hole in the shroud. Be sure that there is adequate clearance from the fan blades.

(3) Connect a tachometer and an engine ignition timing light (timing light is to be used as a strobe light).

(4) Block the air flow through the radiator. Secure a sheet of plastic in front of the radiator (or air conditioner condenser). Use tape at the top to secure the plastic and be sure that the air flow is blocked.

(5) Be sure that the air conditioner (if equipped) is turned off.

WARNING: USE EXTREME CAUTION WHEN THE ENGINE IS OPERATING. DO NOT STAND IN A DIRECT LINE WITH THE FAN. DO NOT PUT YOUR HANDS NEAR THE PULLEYS, BELTS OR FAN. DO NOT WEAR LOOSE CLOTHING.

(6) Start the engine and operate at 2400 rpm. Within ten minutes the air temperature (indicated on the dial thermometer) should be up to 93° C (200° F). Fan drive **engagement** should have started to occur at between 91° to 96° C (195° to 205° F). Engagement is distinguishable by a definite **increase** in fan flow noise (roaring). The timing light also will indicate an increase in the speed of the fan.

(7) When the air temperature reaches 93° C (200° F), remove the plastic sheet. Fan drive **disengagement** should have started to occur at between 62° to 85° C (145° to 185° F). A definite **decrease** of fan flow noise (roaring) should be noticed. If not, replace the defective viscous fan drive unit.

PWM FAN CONTROL MODULE - 4.0L

DESCRIPTION

The pulse width modulated (PWM) radiator cooling fan relay is located behind the front bumper fascia below the right headlamp.

OPERATION

The PWM relay is used to control the speed of the electric radiator cooling fan. It allows for multiple fan

PWM FAN CONTROL MODULE - 4.0L (Continued)

speeds. This allows for improved fan noise and A/C performance, better engine cooling, and additional vehicle power.

PWM relay operation is controlled by the Powertrain Control Module (PCM). To operate the PWM relay, the PCM looks at inputs from:

- Engine coolant temperature
- Ambient temperature from the body controller
- Vehicle speed
- Transmission oil temperature
- A/C switch position (A/C request)

REMOVAL

The Pulse Width Modulated (PWM) cooling fan relay is located below the right headlamp behind the bumper fascia (Fig. 28).

(1) Remove front bumper and grill assembly.

(2) Remove 1 support bolt near front of reservoir (Fig. 28).

(3) Remove 2 reservoir mounting bolts.

(4) Remove reservoir from vehicle to gain access to vacuum hose (Fig. 29). Disconnect vacuum hose from reservoir fitting at rear of reservoir.

(5) Disconnect electrical connector at relay (Fig. 30).

(6) Remove 2 relay mounting bolts (Fig. 30) and remove relay.

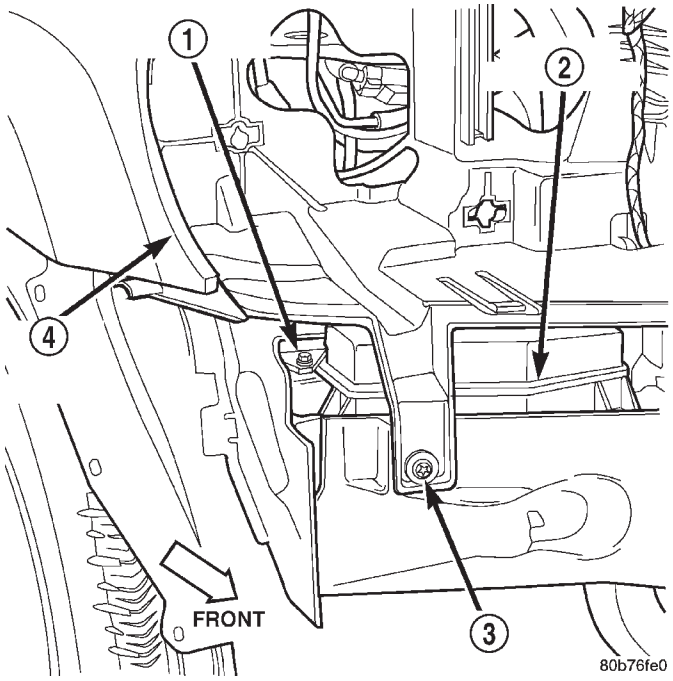

Fig. 28 Radiator Cooling Fan Relay Location

1 - RADIATOR FAN RELAY
2 - VACUUM RESERVOIR
3 - BOLT
4 - RIGHT FRONT FENDER

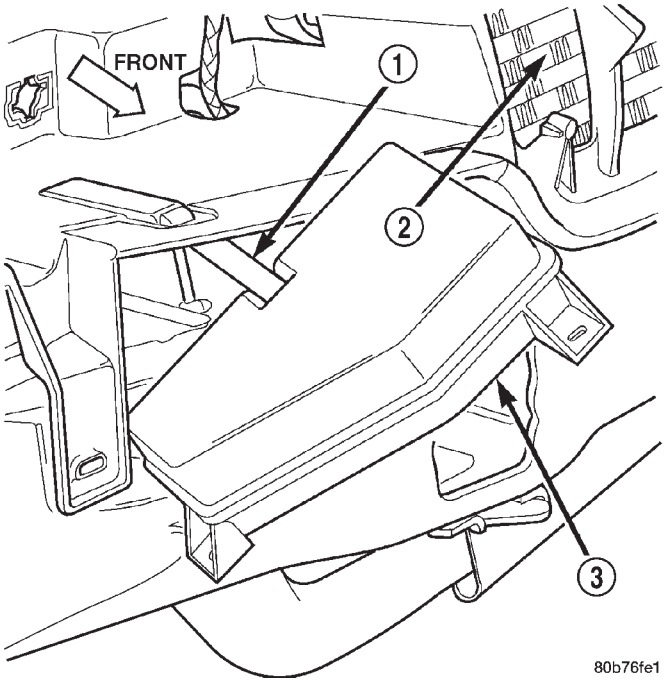

Fig. 29 Vacuum Reservoir Removal/Installation

1 - VACUUM HOSE
2 - RADIATOR
3 - VACUUM RESERVOIR

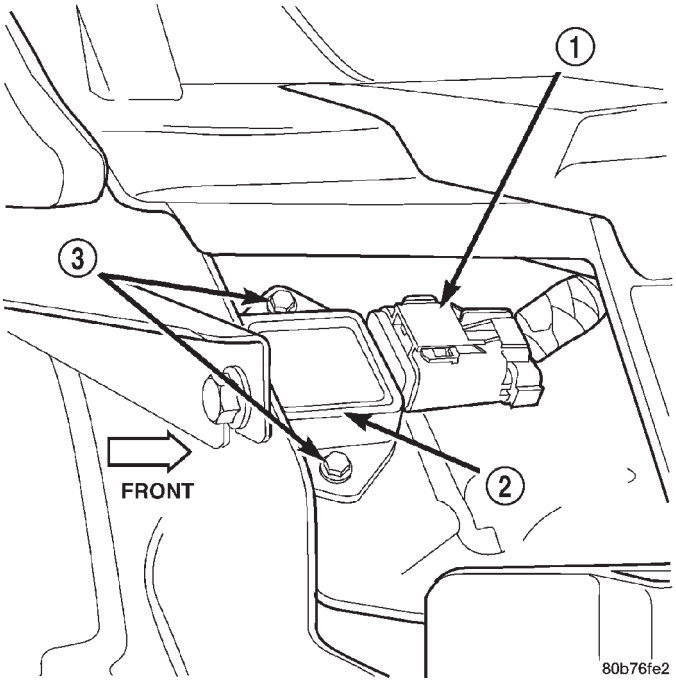

Fig. 30 Radiator Cooling Fan Relay Removal/ Installation

1 - ELECTRICAL CONNECTOR
2 - RADIATOR FAN RELAY
3 - MOUNTING BOLTS (2)

PWM FAN CONTROL MODULE - 4.0L (Continued)

INSTALLATION

(1) Position relay to body and install 2 bolts. Tighten bolts to 3 N·m (25 in. lbs.) torque.
(2) Connect electrical connector to relay.
(3) Connect vacuum hose to reservoir.
(4) Install reservoir and tighten 2 bolts to 3 N·m (25 in. lbs.) torque.
(5) Install front bumper and grill assembly.

RADIATOR - 4.7L

DESCRIPTION

All vehicles are equipped with a cross flow type radiator with plastic side tanks (Fig. 31).

Plastic tanks, while stronger than brass, are subject to damage by impact, such as from tools or wrenches. Handle radiator with care.

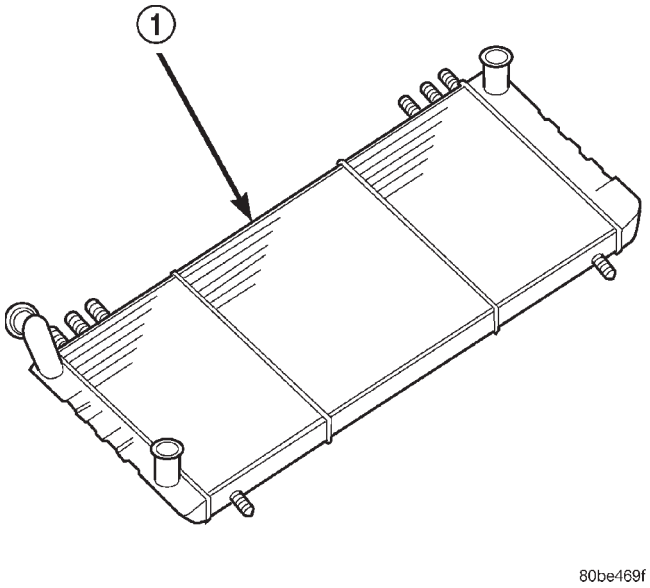

Fig. 31 Cross Flow Radiator—Typical

1 - RADIATOR

REMOVAL

WARNING: DO NOT REMOVE THE CYLINDER BLOCK DRAIN PLUGS OR LOOSEN THE RADIATOR DRAINCOCK WITH THE SYSTEM HOT AND UNDER PRESSURE. SERIOUS BURNS FROM COOLANT CAN OCCUR. REFER TO COOLING SYSTEM DRAINING.

Do not waste reusable coolant. If the solution is clean, drain the coolant into a clean container for reuse.

WARNING: CONSTANT TENSION HOSE CLAMPS ARE USED ON MOST COOLING SYSTEM HOSES. WHEN REMOVING OR INSTALLING, USE ONLY TOOLS DESIGNED FOR SERVICING THIS TYPE OF CLAMP, SUCH AS SPECIAL CLAMP TOOL (NUMBER 6094) (Fig. 32). SNAP-ON CLAMP TOOL (NUMBER HPC-20) MAY BE USED FOR LARGER CLAMPS. ALWAYS WEAR SAFETY GLASSES WHEN SERVICING CONSTANT TENSION CLAMPS.

CAUTION: A number or letter is stamped into the tongue of constant tension clamps (Fig. 33). If replacement is necessary, use only an original equipment clamp with matching number or letter.

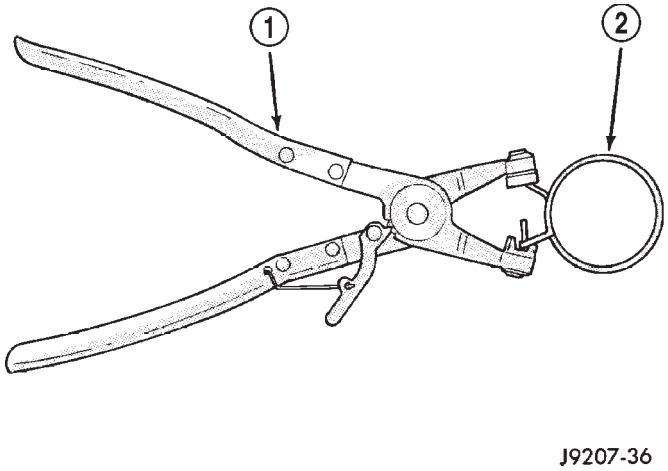

Fig. 32 Hose Clamp Tool—Typical

1 - HOSE CLAMP TOOL 6094
2 - HOSE CLAMP

CAUTION: When removing the radiator or A/C condenser for any reason, note the location of all radiator-to-body and radiator-to-A/C condenser rubber air seals (Fig. 34). These are used at the top, bottom and sides of the radiator and A/C condenser. To prevent overheating, these seals must be installed to their original positions.

(1) Disconnect the negative battery cable at battery.
(2) Drain coolant from radiator (Refer to 7 - COOLING - STANDARD PROCEDURE) .
(3) Remove the front grill (Refer to 23 - BODY/EXTERIOR/GRILLE - REMOVAL).
(4) Remove two radiator mounting bolts.
(5) Disconnect both transmission cooler lines from radiator.
(6) Disconnect electrical connector for the fan control solenoid.
(7) Disconnect the power steering cooler line from cooler and filter.
(8) Disconnect the radiator upper and lower hoses.
(9) Disconnect the overflow hose from radiator.
(10) Remove the air inlet duct at the grill.

RADIATOR - 4.7L (Continued)

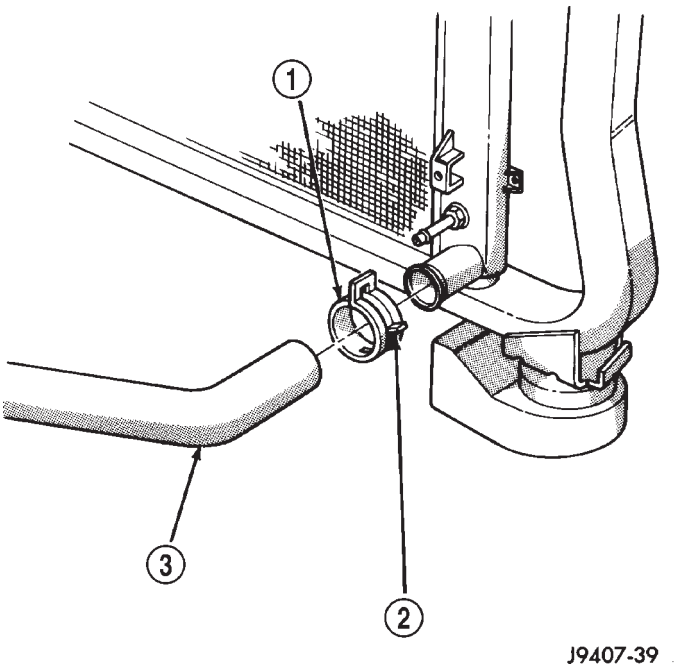

Fig. 33 Clamp Number/Letter Location—Typical

1 - TYPICAL CONSTANT TENSION HOSE CLAMP
2 - CLAMP NUMBER/LETTER LOCATION
3 - TYPICAL HOSE

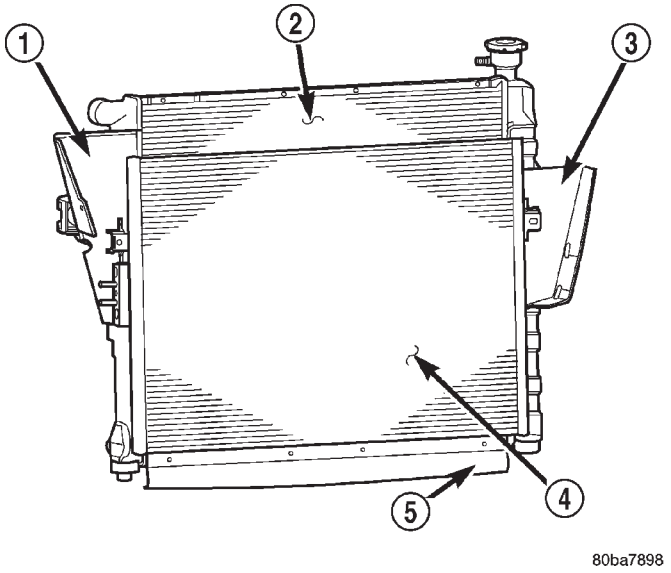

Fig. 34 Air Seals—Typical

1 - AIR DAM
2 - RADIATOR
3 - AIR DAM
4 - A/C CONDENSER
5 - AIR SEAL

(11) The lower part of radiator is equipped with two alignment dowel pins (Fig. 35). They are located on the bottom of radiator tank and fit into rubber grommets. These rubber grommets are pressed into the radiator lower crossmember.

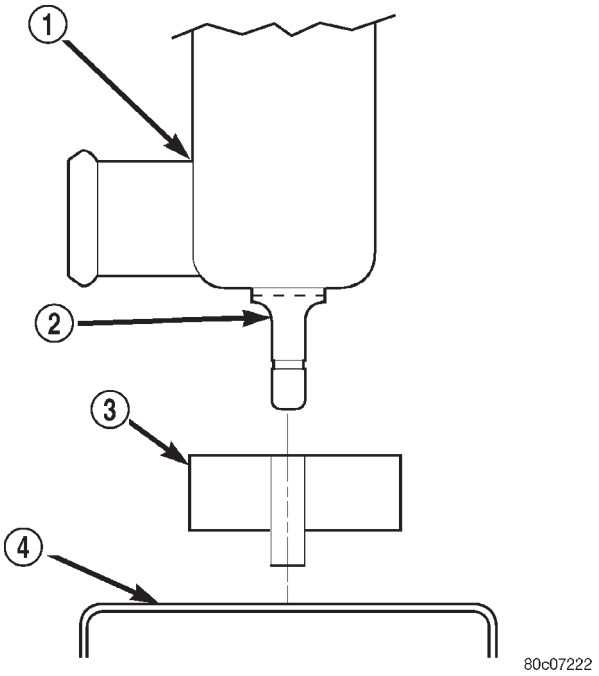

Fig. 35 Radiator Alignment Dowels

1 - RADIATOR
2 - ALIGNMENT DOWEL
3 - RADIATOR LOWER ISOLATOR
4 - RADIATOR LOWER CROSSMEMBER

WARNING: THE AIR CONDITIONING SYSTEM (IF EQUIPPED) IS UNDER A CONSTANT PRESSURE EVEN WITH THE ENGINE OFF. REFER TO REFRIGERANT WARNINGS IN, HEATING AND AIR CONDITIONING BEFORE HANDLING ANY AIR CONDITIONING COMPONENT.

NOTE: The radiator and radiator cooling fan can be removed as an assembly. It is not necessary to remove the cooling fan before removing or installing the radiator.

(12) Disconnect the two high pressure fluid lines at the hydraulic fan drive.

(13) Disconnect the low pressure return hose at the hydraulic fan drive.

(14) Gently lift up and remove radiator from vehicle. Be careful not to scrape the radiator fins against any other component. Also be careful not to disturb the air conditioning condenser (if equipped).

CLEANING

Clean radiator fins With the engine cold, apply cold water and compressed air to the back (engine side) of

RADIATOR - 4.7L (Continued)

the radiator to flush the radiator and/or A/C condenser of debris.

INSPECTION

The radiator cooling fins should be checked for damage or deterioration. Inspect cooling fins to make sure they are not bent or crushed, these areas result in reduced heat exchange causing the cooling system to operate at higher temperatures. Inspect the plastic end tanks for cracks, damage or leaks.

Inspect the radiator neck for damage or distortion.

INSTALLATION

CAUTION: Before installing the radiator or A/C condenser, be sure the radiator-to-body and radiator-to-A/C condenser rubber air seals (Fig. 34) are properly fastened to their original positions. These are used at the top, bottom and sides of the radiator and A/C condenser. To prevent overheating, these seals must be installed to their original positions.

(1) Equipped with air conditioning: Gently lower the radiator and fan shroud into the vehicle. Guide the two radiator alignment dowels through the holes in the rubber air seals first and then through the A/C support brackets (Fig. 35). Continue to guide the alignment dowels into the rubber grommets located in lower radiator crossmember. The holes in the L-shaped brackets (located on bottom of A/C condenser) must be positioned between bottom of rubber air seals and top of rubber grommets.

(2) Connect the radiator upper and lower hoses and hose clamps to radiator.

CAUTION: The tangs on the hose clamps must be positioned straight down.

(3) Install coolant reserve/overflow tank hose at radiator.

(4) Connect both transmission cooler lines at the radiator.

(5) Install both radiator mounting bolts.

(6) Install air inlet duct at grill.

(7) Attach electric connector for hydraulic fan control solenoid.

(8) Install the grill (Refer to 23 - BODY/EXTERIOR/GRILLE - INSTALLATION).

(9) Connect the two high pressure lines to the hydraulic fan drive. Tighten ½ in. pressure line fitting to 49 N·m (36 ft. lbs.). and the 3/8 in. pressure line fitting to 29 N·m (21.5 ft. lbs.).

(10) Connect the low pressure hose to the hydraulic fan drive. Position the spring clamp.

(11) Connect the power steering filter hoses to the filter. Install new hose clamps.

(12) Rotate the fan blades (by hand) and check for interference at fan shroud.

(13) Refill cooling system (Refer to 7 - COOLING - STANDARD PROCEDURE).

(14) Refill the power steering reservoir and bleed air from system (Refer to 19 - STEERING/PUMP - STANDARD PROCEDURE).

(15) Connect battery cable at battery.

(16) Start and warm engine. Check for leaks.

RADIATOR - 4.0L

DESCRIPTION

All vehicles are equipped with a cross flow type radiator with plastic side tanks (Fig. 36).

Plastic tanks, while stronger than brass, are subject to damage by impact, such as from tools or wrenches. Handle radiator with care.

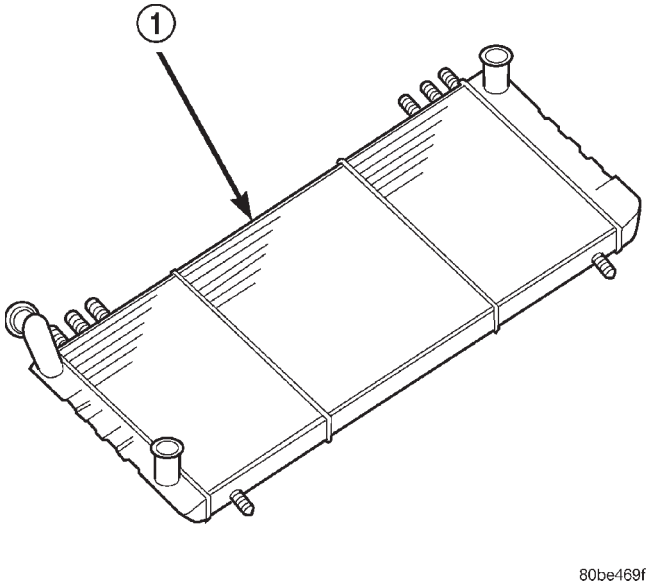

Fig. 36 Cross Flow Radiator—Typical

1 - RADIATOR

REMOVAL

WARNING: DO NOT REMOVE THE CYLINDER BLOCK DRAIN PLUGS OR LOOSEN THE RADIATOR DRAINCOCK WITH THE SYSTEM HOT AND UNDER PRESSURE. SERIOUS BURNS FROM COOLANT CAN OCCUR. REFER TO COOLING SYSTEM DRAINING.

Do not waste reusable coolant. If the solution is clean, drain the coolant into a clean container for reuse.

RADIATOR - 4.0L (Continued)

WARNING: CONSTANT TENSION HOSE CLAMPS ARE USED ON MOST COOLING SYSTEM HOSES. WHEN REMOVING OR INSTALLING, USE ONLY TOOLS DESIGNED FOR SERVICING THIS TYPE OF CLAMP, SUCH AS SPECIAL CLAMP TOOL (NUMBER 6094) (Fig. 37). SNAP-ON CLAMP TOOL (NUMBER HPC-20) MAY BE USED FOR LARGER CLAMPS. ALWAYS WEAR SAFETY GLASSES WHEN SERVICING CONSTANT TENSION CLAMPS.

CAUTION: A number or letter is stamped into the tongue of constant tension clamps (Fig. 38). If replacement is necessary, use only an original equipment clamp with matching number or letter.

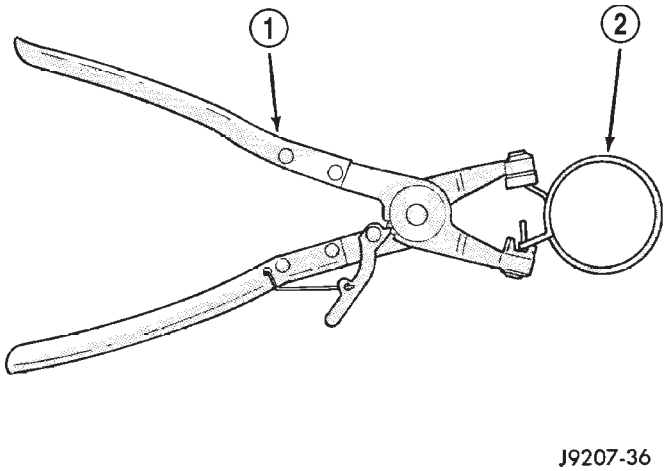

Fig. 37 Hose Clamp Tool - Typical

1 - HOSE CLAMP TOOL 6094
2 - HOSE CLAMP

CAUTION: When removing the radiator or A/C condenser for any reason, note the location of all radiator-to-body and radiator-to-A/C condenser rubber air seals (Fig. 39). These are used at the top, bottom and sides of the radiator and A/C condenser. To prevent overheating, these seals must be installed to their original positions.

(1) Disconnect the negative battery cable at battery.

(2) Drain coolant from radiator (Refer to 7 - COOLING - STANDARD PROCEDURE).

(3) Do not attempt to remove fan/viscous fan drive assembly from vehicle at this time.

(4) Remove the front grill (Refer to 23 - BODY/EXTERIOR/GRILLE - REMOVAL).

(5) Remove two radiator mounting bolts (Fig. 41).

(6) Disconnect both transmission cooler lines from radiator.

(7) Disconnect electric fan connector, then disconnect connector harness from shroud (Fig. 41).

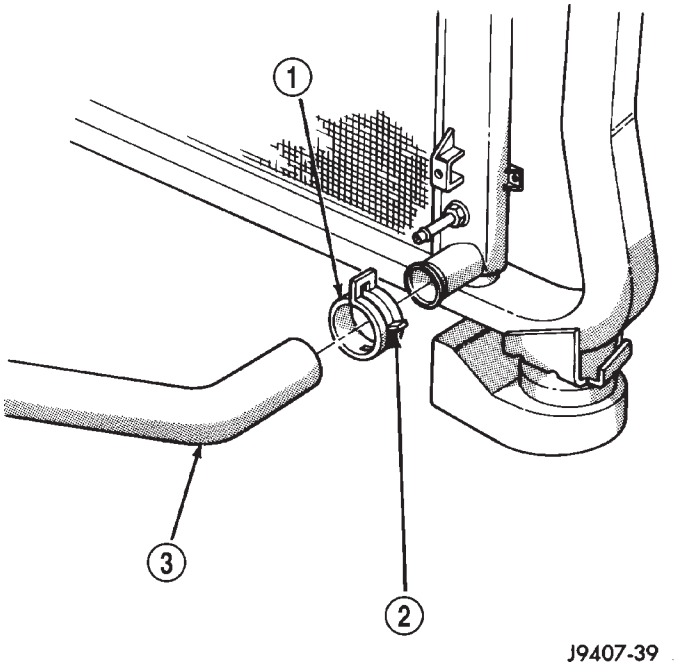

Fig. 38 Clamp Number/Letter Location - Typical

1 - TYPICAL CONSTANT TENSION HOSE CLAMP
2 - CLAMP NUMBER/LETTER LOCATION
3 - TYPICAL HOSE

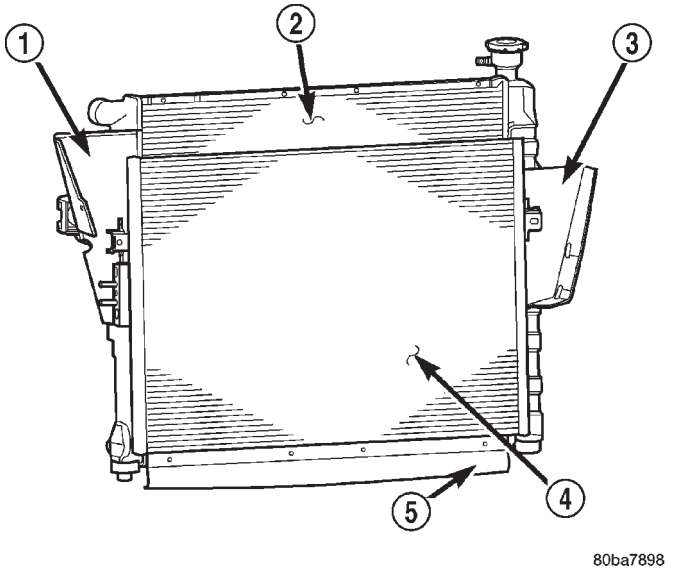

Fig. 39 Air Seals - Typical

1 - AIR DAM
2 - RADIATOR
3 - AIR DAM
4 - A/C CONDENSER
5 - AIR SEAL

(8) Disconnect the radiator upper and lower hoses (Fig. 41).

(9) Disconnect the overflow hose from radiator (Fig. 41).

RADIATOR - 4.0L (Continued)

(10) Remove the air inlet duct at the grill.

(11) The lower part of radiator is equipped with two alignment dowel pins (Fig. 40). They are located on the bottom of radiator tank and fit into rubber grommets. These rubber grommets are pressed into the radiator lower crossmember.

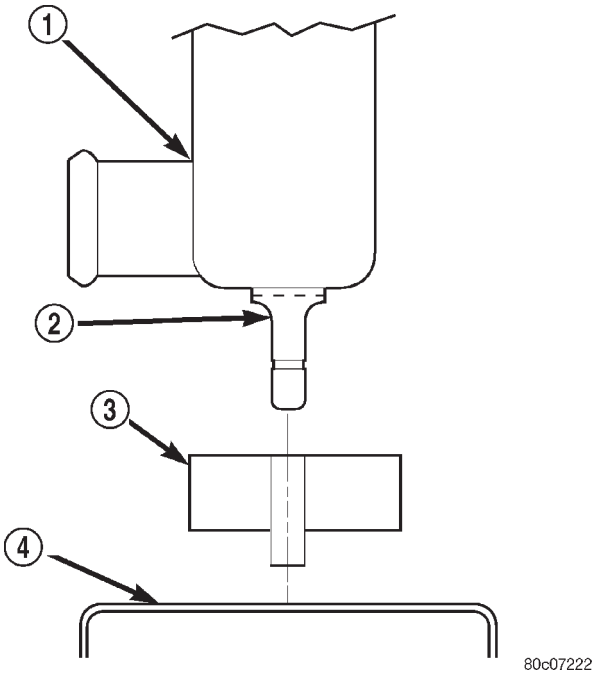

Fig. 40 Radiator Alignment Dowels

1 - RADIATOR
2 - ALIGNMENT DOWEL
3 - RADIATOR LOWER ISOLATOR
4 - RADIATOR LOWER CROSSMEMBER

WARNING: THE AIR CONDITIONING SYSTEM (IF EQUIPPED) IS UNDER A CONSTANT PRESSURE EVEN WITH THE ENGINE OFF. REFER TO REFRIGERANT WARNINGS IN GROUP 24, HEATING AND AIR CONDITIONING BEFORE HANDLING ANY AIR CONDITIONING COMPONENT.

(12) If equipped with an auxiliary automatic transmission oil cooler, use caution when removing radiator. The oil cooler lines are routed through a rubber air seal on the right side of radiator. Do not cut or tear this seal.

(13) Gently lift up and remove radiator from vehicle. Be careful not to scrape the radiator fins against any other component. Also be careful not to disturb the air conditioning condenser (if equipped).

CLEANING

Clean radiator fins With the engine cold, apply cold water and compressed air to the back (engine side) of the radiator to flush the radiator and/or A/C condenser of debris.

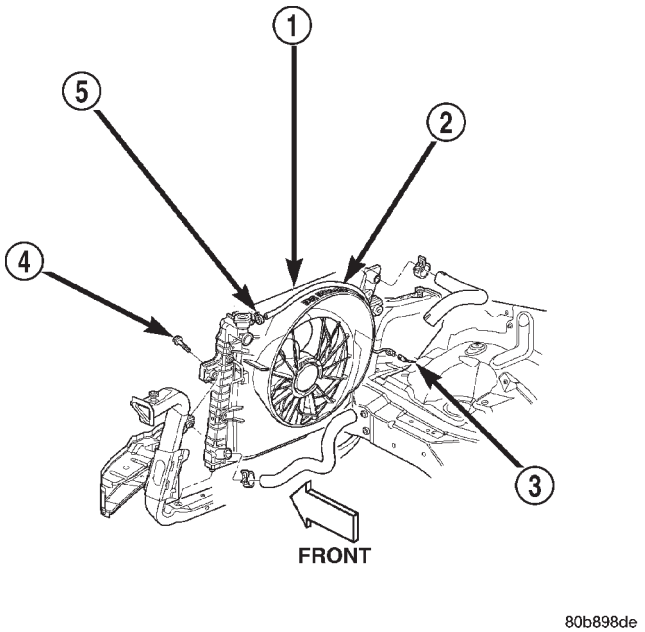

Fig. 41 Radiator, Shroud and Electric Fan

1 - RADIATOR/SHROUD/FAN ASSEMBLY
2 - OVER FLOW HOSE
3 - ELECTRIC FAN CONNECTOR
4 - RADIATOR MOUNTING BOLT(S)
5 - CLAMP

INSPECTION

The radiator cooling fins should be checked for damage or deterioration. Inspect cooling fins to make sure they are not bent or crushed, these areas result in reduced heat exchange causing the cooling system to operate at higher temperatures. Inspect the plastic end tanks for cracks, damage or leaks.

Inspect the radiator neck for damage or distortion.

INSTALLATION

CAUTION: Before installing the radiator or A/C condenser, be sure the radiator-to-body and radiator-to-A/C condenser rubber air seals (Fig. 34) are properly fastened to their original positions. These are used at the top, bottom and sides of the radiator and A/C condenser. To prevent overheating, these seals must be installed to their original positions.

(1) Equipped with air conditioning: Gently lower the radiator into the vehicle. Guide the two radiator alignment dowels through the holes in the rubber air seals first and then through the A/C support brackets (Fig. 35). Continue to guide the alignment dowels into the rubber grommets located in lower radiator crossmember. The holes in the L-shaped brackets (located on bottom of A/C condenser) must be posi-

RADIATOR - 4.0L (Continued)

tioned between bottom of rubber air seals and top of rubber grommets.

(2) Connect the radiator upper and lower hoses and hose clamps to radiator (Fig. 41).

CAUTION: The tangs on the hose clamps must be positioned straight down.

(3) Install coolant reserve/overflow tank hose at radiator (Fig. 41).

(4) Connect both transmission cooler lines at the radiator (Fig. 41).

(5) Install both radiator mounting bolts (Fig. 41).

(6) Install air inlet duct at grill.

(7) Attach electric fan harness to shroud, then connect harness to connector (Fig. 41).

(8) Install the grill (Refer to 23 - BODY/EXTERIOR/GRILLE - INSTALLATION).

(9) Install the fan/viscous fan drive assembly to the water pump.

(10) Rotate the fan blades (by hand) and check for interference at fan shroud.

(11) Be sure of at least 25 mm (1.0 inch) between tips of fan blades and fan shroud.

(12) Fill cooling system (Refer to 7 - COOLING - STANDARD PROCEDURE).

(13) Connect battery cable at battery.

(14) Start and warm engine. Check for leaks.

RADIATOR FAN MOTOR

DIAGNOSIS AND TESTING—ELECTRIC COOLING FAN

The powertrain control module (PCM) will enter a diagnostic trouble code (DTC) in memory if it detects a problem in the auxiliary cooling fan relay or circuit. (Refer to 25 - EMISSIONS CONTROL - DESCRIPTION).

If the electric cooling fan is inoperative, check the 15A fuse in the junction block and the 40A fuse in the Power Distribution Center (PDC) with a 12 volt test lamp or DVOM. Refer to the inside of the PDC cover for the exact location of the fuse. If fuses are okay, refer to ELECTRICAL for cooling fan and relay circuit schematic.

WATER PUMP - 4.7L

DESCRIPTION—WATER PUMP

A centrifugal water pump circulates coolant through the water jackets, passages, intake manifold, radiator core, cooling system hoses and heater core. The pump is driven from the engine crankshaft by a single serpentine drive belt.

The water pump impeller is pressed onto the rear of a shaft that rotates in bearings pressed into the housing. The housing has two small holes to allow seepage to escape. The water pump seals are lubricated by the antifreeze in the coolant mixture. No additional lubrication is necessary.

Both heater hoses are connected to fittings on the timing chain front cover. The water pump is also mounted directly to the timing chain cover and is equipped with a non serviceable integral pulley (Fig. 42).

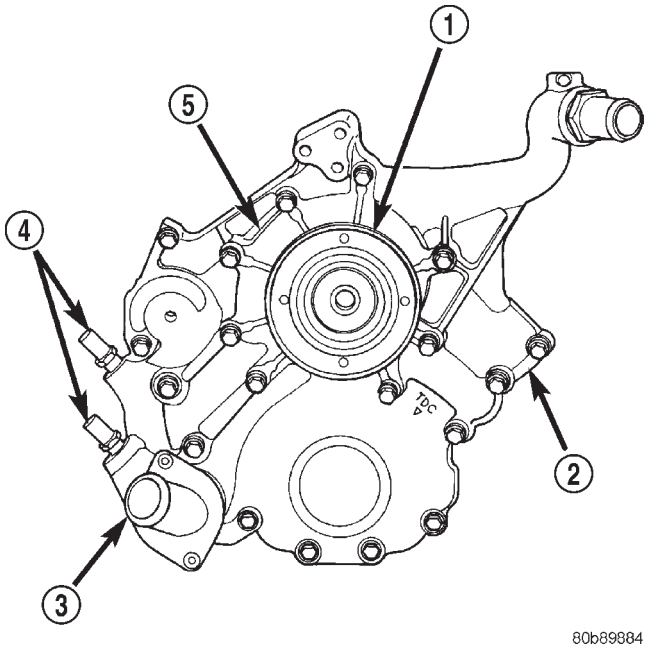

Fig. 42 Water Pump and Timing Chain Cover

1 - INTEGRAL WATER PUMP PULLEY
2 - TIMING CHAIN COVER
3 - THERMOSTAT HOUSING
4 - HEATER HOSE FITTINGS
5 - WATER PUMP

DESCRIPTION—WATER PUMP BYPASS

The 4.7L engine uses an internal water/coolant bypass system. The design uses galleries in the timing chain cover to circulate coolant during engine warm-up preventing the coolant from flowing through the radiator. The thermostat uses a stub shaft located at the rear of the thermostat (Fig. 43) to control flow through the bypass gallery.

OPERATION—WATER PUMP

A centrifugal water pump circulates coolant through the water jackets, passages, intake manifold, radiator core, cooling system hoses and heater core, this coolant absorbs the heat generated when the engine is running. The pump is driven by the engine crankshaft via a drive belt.

WATER PUMP - 4.7L (Continued)

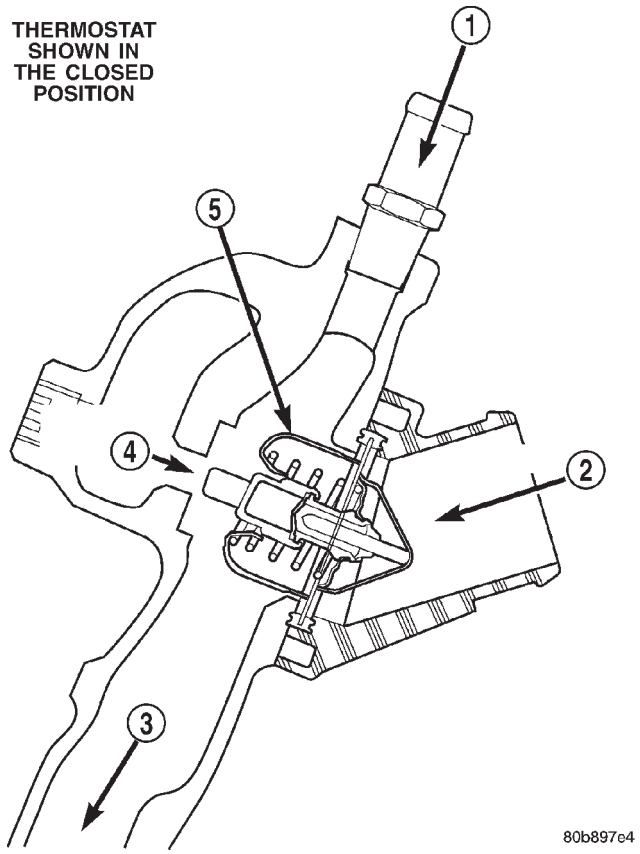

Fig. 43 Water/Coolant Bypass Flow and Thermostat

1 - FROM HEATER
2 - FROM RADIATOR
3 - TO WATER PUMP
4 - ENGINE BYPASS
5 - THERMOSTAT

OPERATION—WATER PUMP BYPASS

When the thermostat is in the closed position the bypass gallery is not obstructed allowing 100% flow. When the thermostat is in the open position the stub shaft enters the bypass gallery obstructing bypass coolant flow by 50%. This design allows the coolant to reach operating temperature quickly when cold, while adding extra cooling during normal temperature operation.

DIAGNOSIS AND TESTING—WATER PUMP

LOOSE IMPELLER - 4.0L and 4.7L

NOTE: Due to the design of the 4.0L and 4.7L engine water pumps, testing the pump for a loose impeller must be done by verifying coolant flow in the radiator. To accomplish this refer to the following procedure.

DO NOT WASTE reusable coolant. If solution is clean, drain coolant into a clean container for reuse.

(1) Drain coolant until the first row of cores is visible in the radiator (Refer to 7 - COOLING - STANDARD PROCEDURE) 4.7L Engine or (Refer to 7 - COOLING - STANDARD PROCEDURE) 4.0L Engine.

(2) Leaving the radiator cap off, start the engine. Run engine until thermostat opens.

(3) While looking into the radiator through the radiator fill neck, raise engine rpm to 2000 RPM. Observe the flow of coolant from the first row of cores.

(4) If there is no flow or very little flow visable, replace the water pump.

INSPECTING FOR INLET RESTRICTIONS

Inadequate heater performance may be caused by a metal casting restriction in the heater hose inlet.

DO NOT WASTE reusable coolant. If solution is clean, drain the coolant into a clean container for reuse.

WARNING: DO NOT LOOSEN THE RADIATOR DRAINCOCK WITH THE SYSTEM HOT AND UNDER PRESSURE. SERIOUS BURNS FROM THE COOLANT CAN OCCUR.

(1) Drain sufficient coolant from the radiator to decrease the level below the heater hose inlet. On 4.7L engines this requires complete draining.

(2) Remove the heater hose.

(3) Inspect the inlet for metal casting flash or other restrictions.

NOTE: On 4.0L engines remove the pump from the engine before removing restriction to prevent contamination of the coolant with debris. . On 4.7L engine remove the fitting from the timing chain cover, If the restriction is in the timing chain cover, remove the timing chain cover.

REMOVAL

The water pump on 4.7L engines is bolted directly to the engine timing chain case/cover.

A gasket is used as a seal between the water pump and timing chain case/cover.

The water pump can be removed without discharging the air conditioning system (if equipped).

(1) Disconnect negative battery cable from battery.

(2) Drain cooling system (Refer to 7 - COOLING - STANDARD PROCEDURE). Do not waste reusable coolant. If solution is clean, drain coolant into a clean container for reuse.

WATER PUMP - 4.7L (Continued)

WARNING: CONSTANT TENSION HOSE CLAMPS ARE USED ON MOST COOLING SYSTEM HOSES. WHEN REMOVING OR INSTALLING, USE ONLY TOOLS DESIGNED FOR SERVICING THIS TYPE OF CLAMP, SUCH AS SPECIAL CLAMP TOOL (NUMBER 6094). SNAP-ON CLAMP TOOL (NUMBER HPC-20) MAY BE USED FOR LARGER CLAMPS. ALWAYS WEAR SAFETY GLASSES WHEN SERVICING CONSTANT TENSION CLAMPS.

CAUTION: A number or letter is stamped into the tongue of constant tension clamps. If replacement is necessary, use only an original equipment clamp with matching number or letter.

(3) Remove accessory drive belt (Refer to 7 - COOLING/ACCESSORY DRIVE/DRIVE BELTS - REMOVAL).
(4) Remove lower radiator hose clamp and remove lower hose at water pump.
(5) Remove seven water pump mounting bolts and one stud bolt.

CAUTION: Do not pry water pump at timing chain case/cover. The machined surfaces may be damaged resulting in leaks.

(6) Remove water pump and gasket. Discard gasket.

CLEANING

Clean the gasket mating surface. Use caution not to damage the gasket sealing surface.

INSPECTION

Inspect the water pump assembly for cracks in the housing, Water leaks from shaft seal, Loose or rough turning bearing or Impeller rubbing either the pump body or timing chain case/cover.

INSTALLATION

(1) Clean gasket mating surfaces.
(2) Using a new gasket, position water pump and install mounting bolts as shown. (Fig. 44). Tighten water pump mounting bolts to 54 N·m (40 ft. lbs.) torque.
(3) Spin water pump to be sure that pump impeller does not rub against timing chain case/cover.
(4) Connect radiator lower hose to water pump.
(5) Install accessory drive belt (Refer to 7 - COOLING/ACCESSORY DRIVE/DRIVE BELTS - INSTALLATION).

CAUTION: When installing the serpentine accessory drive belt, belt must be routed correctly. If not, engine may overheat due to water pump rotating in wrong direction.

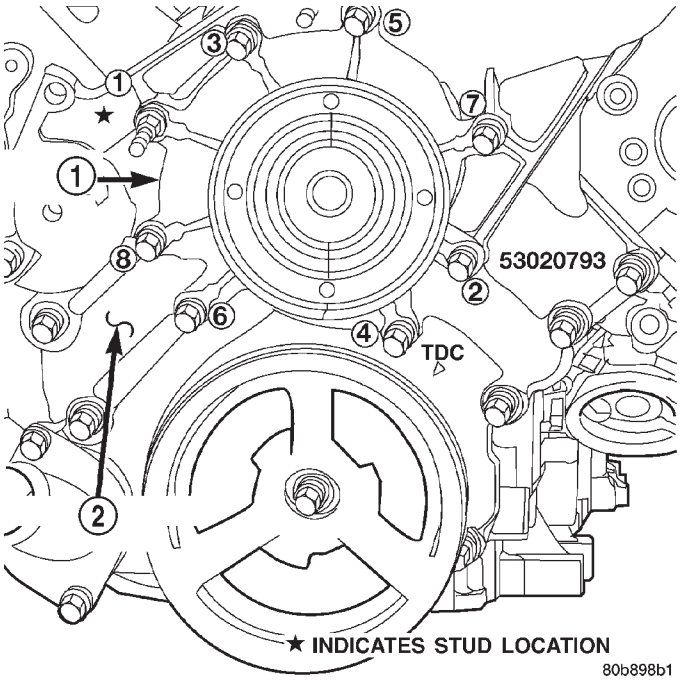

Fig. 44 Water Pump Installation

1 - WATER PUMP
2 - TIMING CHAIN COVER

(6) Refill cooling system (Refer to 7 - COOLING - STANDARD PROCEDURE).
(7) Connect negative battery cable.
(8) Start and warm the engine. Check for leaks.

WATER PUMP - 4.0L

DESCRIPTION

CAUTION: All 4.0L 6-cylinder engines are equipped with a reverse (counterclockwise) rotating water pump and thermal viscous fan drive assembly. REVERSE is stamped or imprinted on the cover of the viscous fan drive and inner side of the fan. The letter R is stamped into the back of the water pump impeller. Engines from previous model years, depending upon application, may have been equipped with a forward (clockwise) rotating water pump. Installation of the wrong water pump or viscous fan drive will cause engine over heating.

A centrifugal water pump circulates coolant through the water jackets, passages, intake manifold, radiator core, cooling system hoses and heater core. The pump is driven from the engine crankshaft by a single serpentine drive belt.

WATER PUMP - 4.0L (Continued)

The water pump impeller is pressed onto the rear of a shaft that rotates in bearings pressed into the housing. The housing has two small holes to allow seepage to escape. The water pump seals are lubricated by the antifreeze in the coolant mixture. No additional lubrication is necessary (Fig. 45).

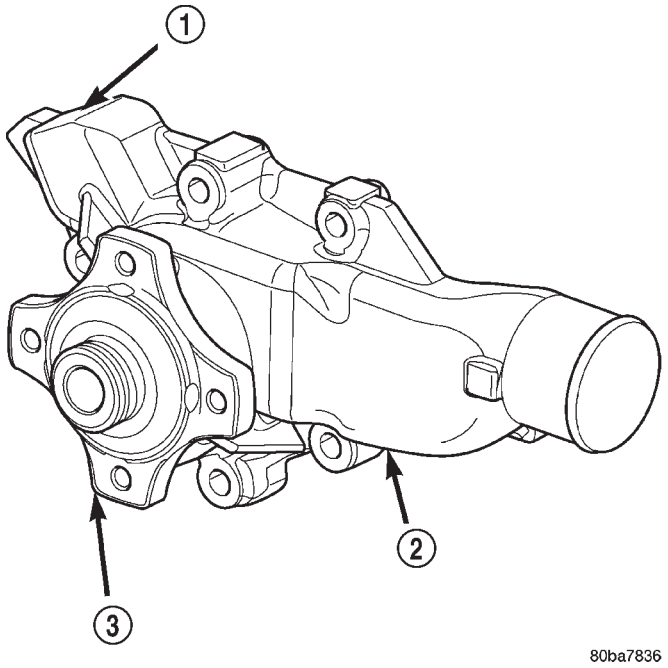

Fig. 45 Water Pump

1 - HEATER HOSE FITTING BORE
2 - WATER PUMP
3 - WATER PUMP HUB

DIAGNOSIS AND TESTING—WATER PUMP

LOOSE IMPELLER - 4.0L and 4.7L

NOTE: Due to the design of the 4.0L and 4.7L engine water pumps, testing the pump for a loose impeller must be done by verifying coolant flow in the radiator. To accomplish this refer to the following procedure.

DO NOT WASTE reusable coolant. If solution is clean, drain coolant into a clean container for reuse.

(1) Drain coolant until the first row of cores is visible in the radiator (Refer to 7 - COOLING - STANDARD PROCEDURE) 4.7L Engine or (Refer to 7 - COOLING - STANDARD PROCEDURE) 4.0L Engine.

(2) Leaving the radiator cap off, start the engine. Run engine until thermostat opens.

(3) While looking into the radiator through the radiator fill neck, raise engine rpm to 2000 RPM. Observe the flow of coolant from the first row of cores.

(4) If there is no flow or very little flow visable, replace the water pump.

INSPECTING FOR INLET RESTRICTIONS

Inadequate heater performance may be caused by a metal casting restriction in the heater hose inlet.

DO NOT WASTE reusable coolant. If solution is clean, drain the coolant into a clean container for reuse.

WARNING: DO NOT LOOSEN THE RADIATOR DRAINCOCK WITH THE SYSTEM HOT AND UNDER PRESSURE. SERIOUS BURNS FROM THE COOLANT CAN OCCUR.

(1) Drain sufficient coolant from the radiator to decrease the level below the heater hose inlet. On 4.7L engines this requires complete draining.

(2) Remove the heater hose.

(3) Inspect the inlet for metal casting flash or other restrictions.

NOTE: On 4.0L engines remove the pump from the engine before removing restriction to prevent contamination of the coolant with debris. . On 4.7L engine remove the fitting from the timing chain cover, If the restriction is in the timing chain cover, remove the timing chain cover.

REMOVAL

CAUTION: If the water pump is replaced because of mechanical damage, the fan blades and viscous fan drive should also be inspected. These components could have been damaged due to excessive vibration.

The water pump impeller is pressed on the rear of the pump shaft and bearing assembly. The water pump is serviced only as a complete assembly.

NOTE: The water pump can be replaced without discharging the A/C system.

WARNING: DO NOT REMOVE THE BLOCK DRAIN PLUG(S) OR LOOSEN RADIATOR DRAINCOCK WITH THE SYSTEM HOT AND UNDER PRESSURE. SERIOUS BURNS FROM COOLANT CAN OCCUR.

DO NOT WASTE reusable coolant. If the solution is clean, drain coolant into a clean container for reuse.

(1) Disconnect negative battery cable at battery.

(2) Drain the cooling system (Refer to 7 - COOLING - STANDARD PROCEDURE).

WATER PUMP - 4.0L (Continued)

(3) The thermal viscous fan drive is attached (threaded) to the water pump hub shaft. Remove fan/viscous fan drive assembly from water pump by turning mounting nut counterclockwise as viewed from front. Threads on viscous fan drive are **RIGHT HAND** Do not attempt to remove fan/viscous fan drive assembly from vehicle at this time.

(4) If water pump is being replaced, do not unbolt fan blade assembly from thermal viscous fan drive.

(5) Remove fan shroud-to-radiator nuts (Fig. 46). Do not attempt to remove fan shroud at this time.

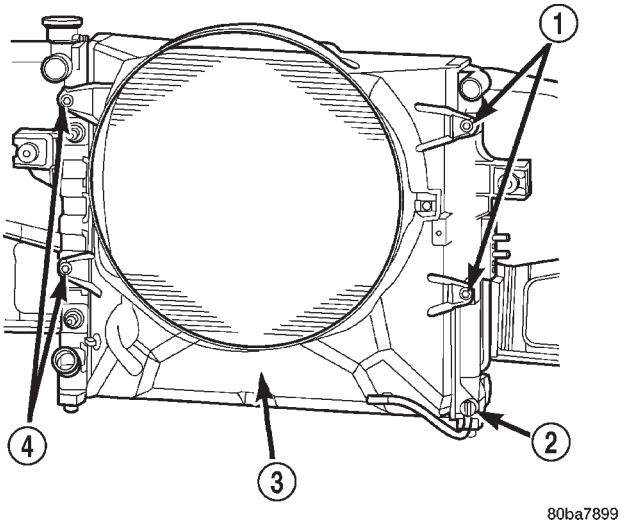

Fig. 46 Fan Shroud Mounting

1 - SHROUD FASTENERS
2 - DRAIN COCK
3 - RADIATOR FAN SHROUD
4 - SHROUD FASTENERS

(6) Remove fan shroud and fan blade/viscous fan drive assembly from vehicle as a complete unit.

(7) After removing fan blade/viscous fan drive assembly, **do not** place thermal viscous fan drive in horizontal position. If stored horizontally, silicone fluid in viscous fan drive could drain into its bearing assembly and contaminate lubricant.

Loosen but do not remove the water pump pulley mounting bolts.

Remove accessory drive belt (Refer to 7 - COOLING/ACCESSORY DRIVE/DRIVE BELTS - REMOVAL).

Remove the water pump pulley.

(8) Remove the idler pulley (located over the water pump).

WARNING: CONSTANT TENSION HOSE CLAMPS ARE USED ON MOST COOLING SYSTEM HOSES. WHEN REMOVING OR INSTALLING, USE ONLY TOOLS DESIGNED FOR SERVICING THIS TYPE OF CLAMP, SUCH AS SPECIAL CLAMP TOOL (NUMBER 6094) (Fig. 47) SNAP-ON CLAMP TOOL (NUMBER HPC-20) MAY BE USED FOR LARGER CLAMPS. ALWAYS WEAR SAFETY GLASSES WHEN SERVICING CONSTANT TENSION CLAMPS.

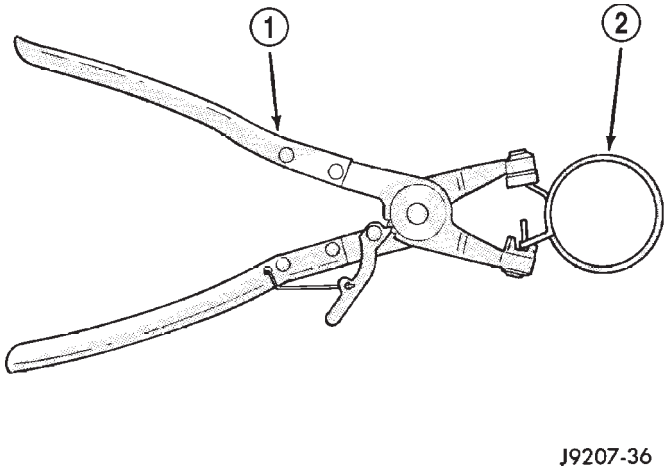

Fig. 47 Hose Clamp Tool - Typical

1 - HOSE CLAMP TOOL 6094
2 - HOSE CLAMP

CAUTION: A number or letter is stamped into the tongue of constant tension clamps (Fig. 48). If replacement is necessary, use only an original equipment clamp with matching number or letter.

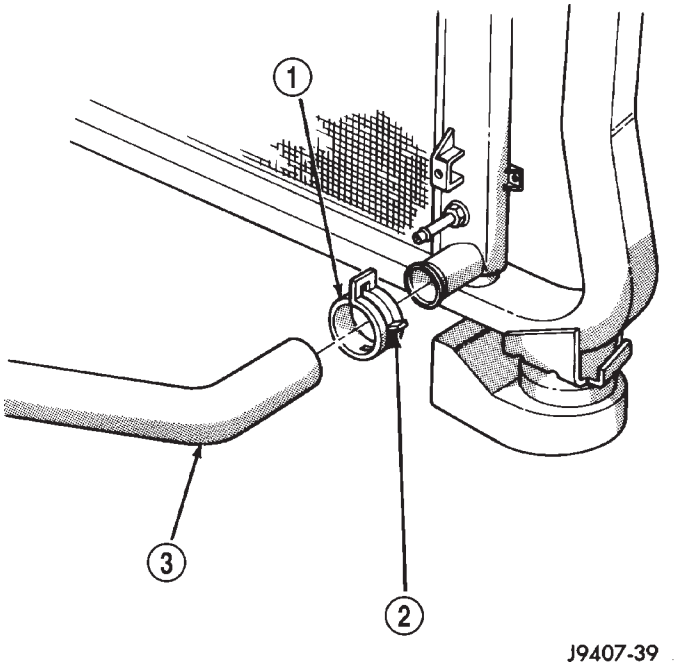

Fig. 48 Clamp - Typical

1 - TYPICAL CONSTANT TENSION HOSE CLAMP
2 - CLAMP NUMBER/LETTER LOCATION
3 - TYPICAL HOSE

(9) Remove lower radiator hose from water pump. Remove heater hose from water pump fitting.

WATER PUMP - 4.0L (Continued)

(10) Remove the five pump mounting bolts (Fig. 49) and remove pump from vehicle. Discard old gasket. Note that one of the five bolts is longer than the other bolts.

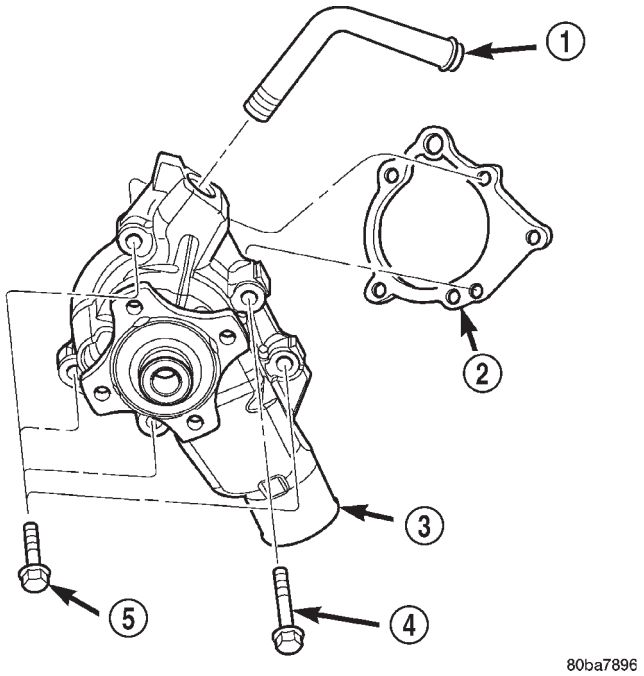

Fig. 49 Water Pump Remove/Install - Typical

1 - HEATER HOSE FITTING
2 - PUMP GASKET
3 - WATER PUMP
4 - LONG BOLT
5 - BOLTS (4) SHORT

(11) If pump is to be replaced, the heater hose fitting must be removed. Note position of fitting before removal.

CLEANING

Clean the gasket mating surface. Use caution not to damage the gasket sealing surface.

INSPECTION

Inspect the water pump assembly for cracks in the housing, Water leaks from shaft seal, Loose or rough turning bearing or Impeller rubbing either the pump body or timing chain case/cover.

INSTALLATION

CAUTION: If the water pump is replaced because of mechanical damage, the fan blades and viscous fan drive should also be inspected. These components could have been damaged due to excessive vibration.

(1) If pump is being replaced, install the heater hose fitting to the pump. Use a sealant on the fitting such as Mopar® Thread Sealant With Teflon. Refer to the directions on the package.

(2) Clean the gasket mating surfaces. If the original pump is used, remove any deposits or other foreign material. Inspect the cylinder block and water pump mating surfaces for erosion or damage from cavitation.

(3) Install the gasket and water pump. The silicone bead on the gasket should be facing the water pump. Also, the gasket is installed dry. Tighten mounting bolts to 30 N·m (22 ft. lbs.) torque. Rotate the shaft by hand to be sure it turns freely.

(4) Connect the radiator and heater hoses to the water pump.

(5) Position water pump pulley to water pump hub. Tighten bolts 28 N·m (250 in. lbs.).

Install the idler pulley. Tighten the bolt 47 N·m (35 ft. lbs.).

CAUTION: When installing the serpentine engine accessory drive belt, the belt MUST be routed correctly. If not, the engine may overheat due to the water pump rotating in the wrong direction. Refer to the Belt Removal and Installtion in this group for appropriate belt routing. You may also refer to the Belt Routing Label in the vehicle engine compartment.

Install accessory drive belt (Refer to 7 - COOLING/ACCESSORY DRIVE/DRIVE BELTS - INSTALLATION).

(6) Install fan blade and viscous fan drive onto water pump.

(7) Fill cooling system with coolant and check for leaks. (Refer to 7 - COOLING - STANDARD PROCEDURE).

(8) Connect battery cable to battery.

(9) Start and warm the engine. Check for leaks.

RADIATOR PRESSURE CAP

DESCRIPTION

All radiators are equipped with a pressure cap. (Fig. 50) This cap releases pressure at some point within a range of 124-to-145 kPa (18-to-21 psi). The pressure relief point (in pounds) is engraved on top of the cap

The cooling system will operate at pressures slightly above atmospheric pressure. This results in a higher coolant boiling point allowing increased radiator cooling capacity. The cap contains a spring-loaded pressure relief valve. This valve opens when system pressure reaches the release range of 124-to-145 kPa (18-to-21 psi).

RADIATOR PRESSURE CAP (Continued)

A rubber gasket seals the radiator filler neck. This is done to maintain vacuum during coolant cool-down and to prevent leakage when system is under pressure.

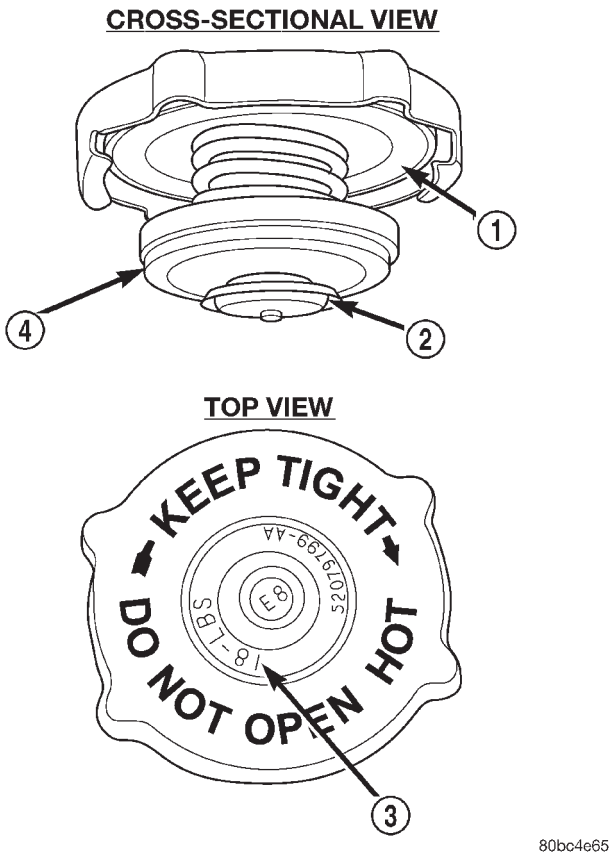

Fig. 50 Radiator Pressure Cap - Typical

1 - FILLER NECK SEAL
2 - VACUUM VENT VALVE
3 - PRESSURE RATING
4 - PRESSURE VALVE

OPERATION

A vent valve in the center of the cap will remain shut as long as the cooling system is pressurized. As the coolant cools, it contracts and creates a vacuum in cooling system. This causes the vacuum valve to open and coolant in reserve/overflow tank to be drawn through connecting hose into radiator. If the vacuum valve is stuck shut, or overflow hose is kinked, radiator hoses will collapse on cool-down.

DIAGNOSIS AND TESTING—RADIATOR PRESSURE CAP

Remove cap from radiator. Be sure that sealing surfaces are clean. Moisten rubber gasket with water and install the cap on pressure tester (tool 7700 or an equivalent) (Fig. 51).

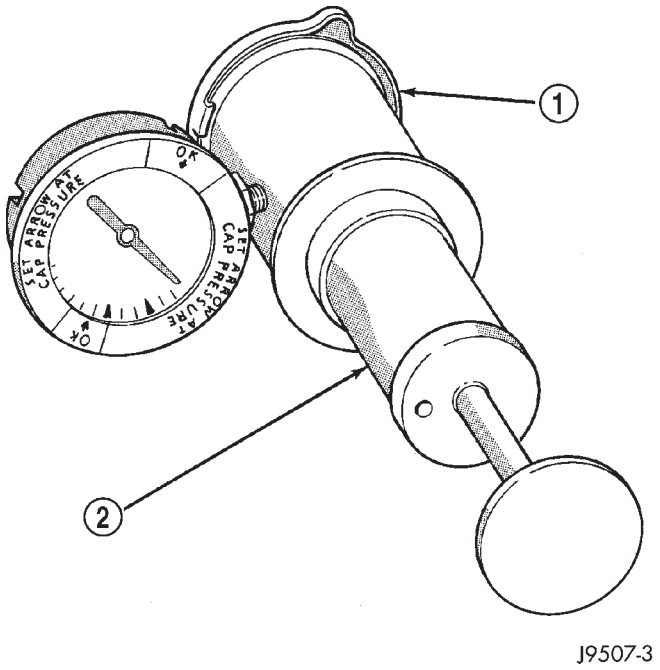

Fig. 51 Pressure Testing Radiator Pressure Cap—Typical

1 - PRESSURE CAP
2 - TYPICAL COOLING SYSTEM PRESSURE TESTER

Operate the tester pump and observe the gauge pointer at its highest point. The cap release pressure should be 124 to 145 kPa (18 to 21 psi). The cap is satisfactory when the pressure holds steady. It is also good if it holds pressure within the 124 to 145 kPa (18 to 21 psi) range for 30 seconds or more. If the pointer drops quickly, replace the cap.

CAUTION: Radiator pressure testing tools are very sensitive to small air leaks, which will not cause cooling system problems. A pressure cap that does not have a history of coolant loss should not be replaced just because it leaks slowly when tested with this tool. Add water to tool. Turn tool upside down and recheck pressure cap to confirm that cap needs replacement.

CLEANING

Clean the radiator pressure cap using a mild soap and water only.

INSPECTION

Visually inspect the pressure valve gasket on the cap. Replace cap if the gasket is swollen, torn or worn. Inspect the area around radiator filler neck for white deposits that indicate a leaking cap.

WATER PUMP INLET TUBE

REMOVAL

WARNING: CONSTANT TENSION HOSE CLAMPS ARE USED ON MOST COOLING SYSTEM HOSES. WHEN REMOVING OR INSTALLING, USE ONLY TOOLS DESIGNED FOR SERVICING THIS TYPE OF CLAMP, SUCH AS SPECIAL CLAMP TOOL (NUMBER 6094) (Fig. 52). SNAP-ON CLAMP TOOL (NUMBER HPC-20) MAY BE USED FOR LARGER CLAMPS. ALWAYS WEAR SAFETY GLASSES WHEN SERVICING CONSTANT TENSION CLAMPS.

CAUTION: A number or letter is stamped into the tongue of constant tension clamps (Fig. 53). If replacement is necessary, use only an original equipment clamp with matching number or letter.

(1) Partially drain cooling system .

(2) Do not waste reusable coolant. If solution is clean, drain coolant into a clean container for reuse.

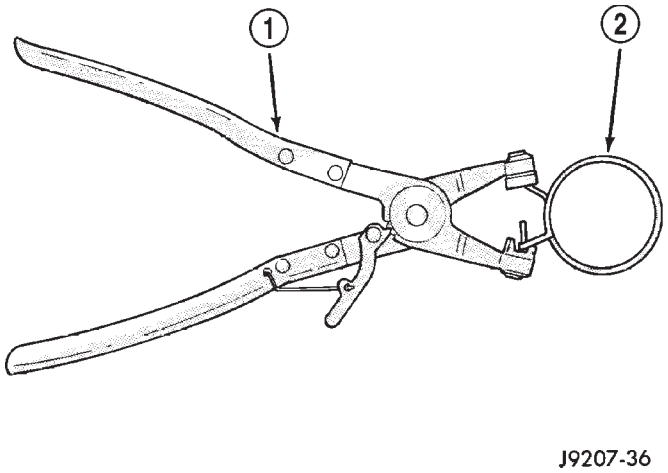

Fig. 52 Hose Clamp Tool—Typical

1 - HOSE CLAMP TOOL 6094
2 - HOSE CLAMP

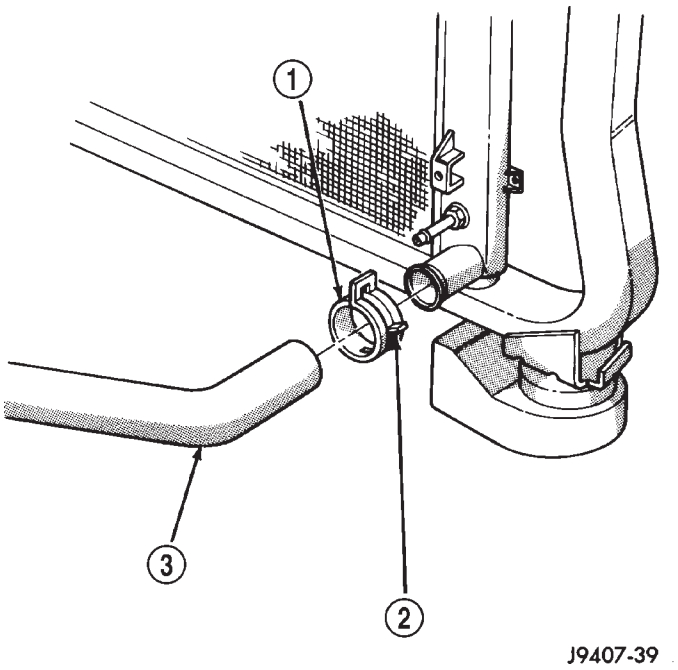

Fig. 53 Clamp Number/Letter Location

1 - TYPICAL CONSTANT TENSION HOSE CLAMP
2 - CLAMP NUMBER/LETTER LOCATION
3 - TYPICAL HOSE

(3) Loosen both bypass hose clamps (Fig. 52) and position to center of hose. Remove hose from vehicle.

INSTALLATION

(1) Position bypass hose clamps (Fig. 52) to center of hose.

(2) Install bypass hose to engine.

(3) Secure both hose clamps (Fig. 52).

(4) Refill cooling system .

(5) Start and warm the engine. Check for leaks.

TRANSMISSION

TABLE OF CONTENTS

page

TRANSMISSION
DIAGNOSIS AND TESTING 55
DIAGNOSIS & TESTING - TRANS OIL COOLER 55

page

TRANS COOLER
DESCRIPTION 56
STANDARD PROCEDURE 56
FLUSHING COOLERS AND TUBES 56

TRANSMISSION

DIAGNOSIS AND TESTING—TRANS OIL COOLER FLOW

To determine whether the transmission oil has proper flow through the oil cooler, perform the following procedure:

(1) Disconnect the “from cooler” line that connects to the transmission.

(2) Using Special Tool adaptors 6906-1-2 with a 3/8 in. transmission hose attached to one adapter, connect Special Tool 8392 flow meter in-series with the oil cooler flow circuit (Fig. 1).

(3) Start engine and observe the flow meter gauge. Refer to the following chart for specifications.

COOLER FLOW SPECIFICATION (Min.)	
2.6 LPM	(0.7 GPM)

(4) If oil flow is below minimum specifications, further diagnosis must be performed.

(a) Perform Oil Pump Volume Check. Refer to TRANSMISSION/TRANSAXLE for procedure.

(b) If oil pump volume is within specification, a possible restriction in the cooler lines or cooler has occurred.

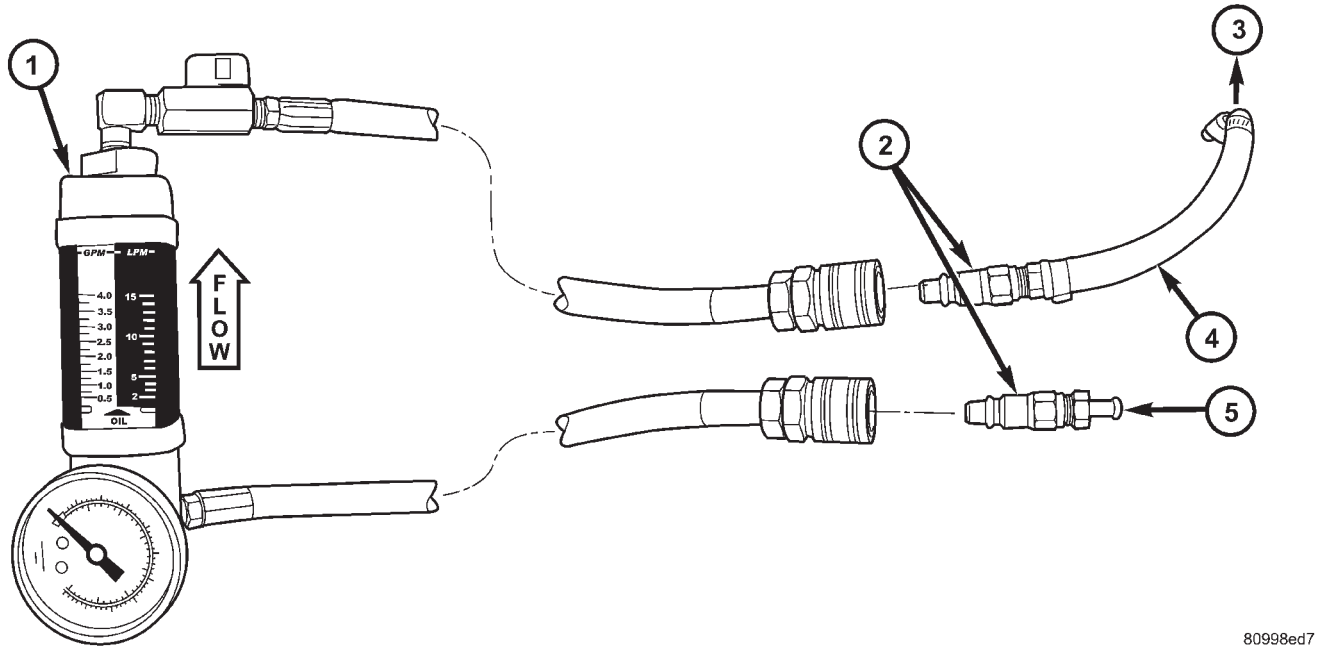

Fig. 1 Special Tool 8392

1 - 8392 FLOW/PRESSURE METER
2 - 6906-1-2 ADAPTERS
3 - CLAMP
4 - 3/8 IN. HOSE TO TRANSMISSION
5 - CONNECTION FOR 3/8 HOSE FROM COOLER

TRANSMISSION (Continued)

(c) If oil pump volume is not within specification, possible internal transmission restrictions, component wear or damage has occurred.

(d) If an oil cooler restriction is suspected, perform further inspections and flow meter testing by isolating components (i.e.lines, coolers). Refer to TRANSMISSION/TRANSAXLE.

(e) After a restriction is isolated, perform cooler flush procedure. (Refer to 7 - COOLING/TRANSMISSION - STANDARD PROCEDURE)

(f) Re-test cooler flow. If cooler flow does not meet minimum specification, replace component(s) as necessary.

TRANS COOLER

DESCRIPTION

An internal high capacity/high efficiency cooler is used on all vehicles these coolers are an oil-to-coolant type which consists of plates mounted in the radiator outlet tank (Fig. 31). Because the internal oil cooler is so efficient, no auxiliary oil cooler is offered The cooler is not servicable seperatly from the radiator.

STANDARD PROCEDURE - COOLER FLUSH USING TOOL 6906-B

When a transmission failure has contaminated the fluid, the oil cooler(s) must be flushed. The torque converter must also be replaced. This will insure that metal particles or sludged oil are not later transferred back into the reconditioned (or replaced) transmission.

The only recommended procedure for flushing coolers and lines is to use Tool 6906-B Cooler Flusher.

WARNING:
WEAR PROTECTIVE EYEWEAR THAT MEETS THE REQUIREMENTS OF OSHA AND ANSI Z87.1–1968. WEAR STANDARD INDUSTRIAL RUBBER GLOVES. KEEP LIGHTED CIGARETTES, SPARKS, FLAMES, AND OTHER IGNITION SOURCES AWAY FROM THE AREA TO PREVENT THE IGNITION OF COMBUSTIBLE LIQUIDS AND GASES. KEEP A CLASS (B) FIRE EXTINGUISHER IN THE AREA WHERE THE FLUSHER WILL BE USED.
KEEP THE AREA WELL VENTILATED.
DO NOT LET FLUSHING SOLVENT COME IN CONTACT WITH YOUR EYES OR SKIN: IF EYE CONTAMINATION OCCURS, FLUSH EYES WITH WATER FOR 15 TO 20 SECONDS. REMOVE CONTAMINATED CLOTHING AND WASH AFFECTED SKIN WITH SOAP AND WATER. SEEK MEDICAL ATTENTION.

(1) Remove cover plate filler plug on Tool 6906-B. Fill reservoir 1/2 to 3/4 full of fresh flushing solution. Flushing solvents are petroleum based solutions generally used to clean automatic transmission components. **DO NOT** use solvents containing acids, water, gasoline, or any other corrosive liquids.

(2) Reinstall filler plug on Tool 6906-B.

(3) Verify pump power switch is turned OFF. Connect red alligator clip to positive (+) battery post. Connect black (-) alligator clip to a good ground.

(4) Disconnect the cooler lines at the transmission.

NOTE: When flushing transmission cooler and lines, ALWAYS reverse flush.

NOTE: The converter drainback valve must be removed and an appropriate replacement hose installed to bridge the space between the transmission cooler line and the cooler fitting. Failure to remove the drainback valve will prevent reverse flushing the system. A suitable replacement hose can be found in the adapter kit supplied with the flushing tool.

(5) Connect the BLUE pressure line to the OUTLET (From) cooler line.

(6) Connect the CLEAR return line to the INLET (To) cooler line

(7) Turn pump ON for two to three minutes to flush cooler(s) and lines.

(8) Turn pump OFF.

(9) Disconnect CLEAR suction line from reservoir at cover plate. Disconnect CLEAR return line at cover plate, and place it in a drain pan.

(10) Turn pump ON for 30 seconds to purge flushing solution from cooler and lines. Turn pump OFF.

(11) Place CLEAR suction line into a one quart container of Mopar® ATF Plus 4, type 9602 automatic transmission fluid.

(12) Turn pump ON until all transmission fluid is removed from the one quart container and lines. This purges any residual cleaning solvent from the transmission cooler and lines. Turn pump OFF.

(13) Disconnect alligator clips from battery. Reconnect flusher lines to cover plate, and remove flushing adapters from cooler lines.

AUDIO

TABLE OF CONTENTS

page

AUDIO
DESCRIPTION . . . 1
OPERATION . . . 2
DIAGNOSIS AND TESTING . . . 3
AUDIO SYSTEM . . . 3
SPECIAL TOOLS . . . 5
AMPLIFIER
DESCRIPTION . . . 5
OPERATION . . . 5
DIAGNOSIS AND TESTING . . . 5
POWER AMPLIFIER . . . 5
REMOVAL . . . 5
INSTALLATION . . . 5
ANTENNA BODY & CABLE
DESCRIPTION . . . 6
OPERATION . . . 7
DIAGNOSIS AND TESTING . . . 7
ANTENNA . . . 7
REMOVAL . . . 9
INSTALLATION . . . 10
CD CHANGER
DESCRIPTION . . . 10
OPERATION . . . 11
DIAGNOSIS AND TESTING . . . 11
COMPACT DISC CHANGER . . . 11
REMOVAL . . . 12
INSTALLATION . . . 13

page

INSTRUMENT PANEL ANTENNA CABLE
INSTALLATION . . . 13
RADIO
DESCRIPTION . . . 14
OPERATION . . . 14
DIAGNOSIS AND TESTING . . . 14
RADIO RECEIVER . . . 14
REMOVAL . . . 15
INSTALLATION . . . 16
RADIO NOISE SUPPRESSION GROUND STRAP
DESCRIPTION . . . 16
REMOVAL . . . 16
INSTALLATION . . . 17
REMOTE SWITCHES
DESCRIPTION . . . 17
OPERATION . . . 18
DIAGNOSIS AND TESTING . . . 18
REMOTE RADIO SWITCH . . . 18
REMOVAL . . . 19
INSTALLATION . . . 20
SPEAKER
DESCRIPTION . . . 20
OPERATION . . . 20
DIAGNOSIS AND TESTING . . . 20
SPEAKER . . . 20
REMOVAL . . . 22
INSTALLATION . . . 22

AUDIO

DESCRIPTION

An audio system is standard factory-installed equipment on this model. The standard equipment audio system includes an AM/FM/cassette (RAS sales code) radio receiver, and speakers in six locations. Several combinations of radio receivers and speaker systems are offered as optional equipment on this model. The audio system uses an ignition switched source of battery current so that the system will only operate when the ignition switch is in the On or Accessory positions.

A Compact Disc (CD) changer with a ten disc magazine, remote radio switches with six functions mounted to the backs of the steering wheel spokes, and a memory system that automatically stores and recalls up to twenty radio station presets (ten AM and ten FM) and the last station listened to for two drivers are optional factory-installed equipment on this model. Refer to Electrical, Power Seats for more information on the memory system.

The audio system includes the following components:

- Antenna
- Compact disc changer (available with RBN sales code radio receivers only)
- Power amplifier (with premium speaker system only)
- Radio noise suppression components
- Radio receiver
- Remote radio switches
- Speakers

Certain functions and features of the audio system rely upon resources shared with other electronic modules in the vehicle over the Programmable Communications Interface (PCI) data bus network. The PCI data bus network allows the sharing of sensor information. This helps to reduce wire harness complexity, internal controller hardware, and component sensor current loads. At the same time, this system

provides increased reliability, enhanced diagnostics, and allows the addition of many new feature capabilities. For diagnosis of these electronic modules or of the PCI data bus network, the use of a DRB scan tool and the proper Diagnostic Procedures manual are recommended.

The other electronic modules that may affect audio system operation are as follows:

- **Body Control Module (BCM)** - (Refer to 8 - ELECTRICAL/ELECTRONIC CONTROL MODULES/BODY CONTROL/CENTRAL TIMER MODUL - DESCRIPTION) for more information.
- **Driver Door Module (DDM)** (Refer to 8 - ELECTRICAL/ELECTRONIC CONTROL MODULES/DRIVER DOOR MODULE - DESCRIPTION) for more information.
- **Passenger Door Module (PDM)** (Refer to 8 - ELECTRICAL/ELECTRONIC CONTROL MODULES/DRIVER DOOR MODULE - DESCRIPTION) for more information.

The audio system includes the following major components, which are described in further detail elsewhere in this service information:

- **Amplifier** - On models equipped with the optional premium speaker system, an audio power amplifier is located on the rear floor panel underneath the left end of the rear seat cushion in the passenger compartment.
- **Antenna Body and Cable** - The most visible component of the antenna body and cable are the antenna adapter and the antenna cap nut, which are located on the top of the right front fender panel of the vehicle, near the right end of the cowl plenum.
- **Antenna Mast** - The antenna mast is a metal rod that extends upward from the antenna body and cable on the top of the right front fender panel of the vehicle, near the right end of the cowl plenum.
- **Radio** - The radio for this model is located in the instrument panel center stack area, inboard of the instrument cluster and above the heater and air conditioner controls.
- **Radio Noise Suppression Ground Strap** - A radio noise suppression ground strap is installed between the rear of the engine cylinder head and the dash panel sheet metal in the engine compartment.
- **Speaker** - The standard speaker system includes four speakers in four locations, while the premium speaker system includes six speakers in six locations.

Hard wired circuitry connects the audio system components to each other through the electrical system of the vehicle. These hard wired circuits are integral to several wire harnesses, which are routed throughout the vehicle and retained by many different methods. These circuits may be connected to each other, to the vehicle electrical system and to the audio system components through the use of a combination of soldered splices, splice block connectors and many different types of wire harness terminal connectors and insulators. Refer to the appropriate wiring information in this service manual for complete standard and premium audio system circuit diagrams. The wiring information includes proper wire and connector repair procedures, further details on wire harness routing and retention, as well as pin-out and location views for the various wire harness connectors, splices, and grounds.

OPERATION

The audio system components are designed to provide audio entertainment and information through the reception, tuning and amplification of locally broadcast radio signals in both the Amplitude Modulating (AM) and Frequency Modulating (FM) commercial frequency ranges. Electromagnetic radio signals that are broadcast from a radio station induce electrical modulations into the audio system antenna mast. The antenna body and cable conduct these weak signals from the antenna mast to the radio. The radio then tunes and amplifies these weak signals into stronger electrical signals that are required in order to operate the audio system speakers. The speakers convert these electrical signals into air movement, which reproduces the sounds being broadcast by the radio station.

Some audio systems also offer the user the option of selecting from and listening to prerecorded audio cassette tapes, audio compact discs, or both. Regardless of the media type, the audio system components provide the user with the ability to electronically amplify and adjust the audio signals being reproduced by the speakers within the vehicle to suit the preferences of the vehicle occupants.

The audio system components operate on battery current received through a fuse in the Junction Block (JB) on a fused ignition switch output (run-acc) circuit so that the system will only operate when the ignition switch is in the On or Accessory positions.

On vehicles that are equipped with the optional remote radio switches, the BCM receives hard wired resistor multiplexed inputs from the remote radio switches. The programming in the BCM allows it to process those inputs and send the proper messages to the radio receiver over the PCI data bus to control the radio volume up or down, station seek up or down, preset station advance, and mode advance functions.

On vehicles equipped with the optional memory system, when the DDM receives a Driver 1 or Driver 2 memory recall input from the memory switch on the driver side front door trim panel or a memory recall message from the Remote Keyless Entry (RKE)

AUDIO (Continued)

receiver in the PDM, the DDM sends a memory recall message back to the radio receiver over the PCI data bus to recall the radio station presets and last station listened to information.

See the owner's manual in the vehicle glove box for more information on the features, use and operation of each of the available audio systems.

DIAGNOSIS AND TESTING - AUDIO SYSTEM

Refer to the appropriate wiring information. The wiring information includes wiring diagrams, proper wire and connector repair procedures, details of wire harness routing and retention, connector pin-out information and location views for the various wire harness connectors, splices and grounds.

WARNING: ON VEHICLES EQUIPPED WITH AIRBAGS, DISABLE THE AIRBAG SYSTEM BEFORE ATTEMPTING ANY STEERING WHEEL, STEERING COLUMN, OR INSTRUMENT PANEL COMPONENT DIAGNOSIS OR SERVICE. DISCONNECT AND ISOLATE THE BATTERY NEGATIVE (GROUND) CABLE, THEN WAIT TWO MINUTES FOR THE AIRBAG SYSTEM CAPACITOR TO DISCHARGE BEFORE PERFORMING FURTHER DIAGNOSIS OR SERVICE. THIS IS THE ONLY SURE WAY TO DISABLE THE AIRBAG SYSTEM. FAILURE TO TAKE THE PROPER PRECAUTIONS COULD RESULT IN ACCIDENTAL AIRBAG DEPLOYMENT AND POSSIBLE PERSONAL INJURY.

AUDIO SYSTEM DIAGNOSIS		
CONDITION	POSSIBLE CAUSES	CORRECTION
NO AUDIO	1. Fuse faulty.	1. Check radio fuse in Junction Block (JB) and Ignition-Off Draw (IOD) fuse in Power Distribution Center (PDC). Replace fuses, if required.
	2. Radio connector faulty.	2. Check for loose or corroded radio connector. Repair, if required.
	3. Wiring faulty.	3. Check for battery voltage at radio connector. Repair wiring, if required.
	4. Radio ground faulty.	4. Check for continuity between radio chassis and a known good ground. There should be continuity. Repair ground, if required.
	5. Radio faulty.	5. (Refer to 8 - ELECTRICAL/AUDIO/RADIO - DIAGNOSIS AND TESTING).
	6. Speakers faulty.	6. (Refer to 8 - ELECTRICAL/AUDIO/SPEAKER - DIAGNOSIS AND TESTING).
	7. Amplifier faulty (if equipped).	7. (Refer to 8 - ELECTRICAL/AUDIO/AMPLIFIER - DIAGNOSIS AND TESTING).
NO RADIO DISPLAY	1. Fuse faulty.	1. Check radio fuse in Junction Block (JB) and Ignition-Off Draw (IOD) fuse in Power Distribution Center (PDC). Replace fuses, if required.
	2. Radio connector faulty.	2. Check for loose or corroded radio connector. Repair, if required.
	3. Wiring faulty.	3. Check for battery voltage at radio connector. Repair wiring, if required.
	4. Radio ground faulty.	4. Check for continuity between radio chassis and a known good ground. There should be continuity. Repair ground, if required.
	5. Radio faulty.	5. (Refer to 8 - ELECTRICAL/AUDIO/RADIO - DIAGNOSIS AND TESTING).

AUDIO (Continued)

AUDIO SYSTEM DIAGNOSIS		
CONDITION	POSSIBLE CAUSES	CORRECTION
CLOCK WILL NOT KEEP SET TIME	1. Fuse faulty.	1. Check Ignition-Off Draw (IOD) fuse in the Power Distribution Center (PDC). Replace fuse, if required.
	2. Radio connector faulty.	2. Check for loose or corroded radio connector. Repair, if required.
	3. Wiring faulty.	3. Check for battery voltage at radio connector. Repair wiring, if required.
	4. Radio ground faulty.	4. Check for continuity between radio chassis and a known good ground. There should be continuity. Repair ground, if required.
	5. Radio faulty.	5. (Refer to 8 - ELECTRICAL/AUDIO/RADIO - DIAGNOSIS AND TESTING).
POOR RADIO RECEPTION	1. Antenna faulty.	1. (Refer to 8 - ELECTRICAL/AUDIO/ANTENNA BODY & CABLE - DIAGNOSIS AND TESTING).
	2. Radio ground faulty.	2. Check for continuity between radio chassis and a known good ground. There should be continuity. Repair ground, if required.
	3. Radio noise suppression faulty.	3. (Refer to 8 - ELECTRICAL/AUDIO/RADIO NOISE SUPPRESSION - DIAGNOSIS AND TESTING).
	4. Radio faulty.	4. (Refer to 8 - ELECTRICAL/AUDIO/RADIO - DIAGNOSIS AND TESTING).
NO/POOR TAPE OPERATION	1. Faulty tape.	1. Insert known good tape and test operation.
	2. Foreign objects behind tape door.	2. Remove foreign objects and test operation.
	3. Dirty cassette tape head.	3. Clean head with Mopar Cassette Head Cleaner.
	4. Faulty tape deck.	4. Exchange or replace radio, if required.
NO COMPACT DISC OPERATION	1. Faulty CD.	1. Insert known good CD and test operation.
	2. Foreign material on CD.	2. Clean CD and test operation.
	3. Condensation on CD or optics.	3. Allow temperature of vehicle interior to stabilize and test operation.
	4. Faulty CD player.	4. Exchange or replace radio, if required.
NO COMPACT DISC CHANGER OPERATION	1. Faulty CD.	1. Insert known good CD and test operation.
	2. Foreign material on CD.	2. Clean CD and test operation.
	3. Condensation on CD or optics.	3. Allow temperature of vehicle interior to stabilize and test operation.
	4. CD changer connector faulty.	4. Check for loose or corroded CD changer connections. Repair, if required.
	5. Wiring faulty.	5. Refer to Compact Disc Changer in the Diagnosis and Testing section of this group.

AUDIO (Continued)

AUDIO SYSTEM DIAGNOSIS		
CONDITION	POSSIBLE CAUSES	CORRECTION
	6. PCI data bus faulty.	6. Use DRB scan tool and the Diagnostic Procedures manual to test PCI data bus. Repair, if required.
	7. CD changer faulty.	7. Refer to Compact Disc Changer in the Diagnosis and Testing section of this group.

SPECIAL TOOLS

AUDIO SYSTEMS

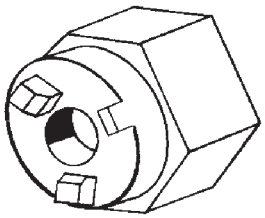

Antenna Nut Wrench C-4816

AMPLIFIER

DESCRIPTION

Models equipped with the Infinity premium speaker package have a separate power amplifier unit. This power amplifier is rated at 180 watts output. The power amplifier unit is mounted to the rear floor panel under the passenger side rear seat cushion. The power amplifier unit can be accessed for service by unlatching and tilting the passenger side rear seat cushion forward.

The power amplifier unit should be checked if there is no sound output noted from the speakers. For diagnosis of the power amplifier, (Refer to 8 - ELECTRICAL/AUDIO/SPEAKER - DIAGNOSIS AND TESTING). The power amplifier cannot be repaired or adjusted and, if faulty or damaged, the unit must be replaced.

OPERATION

The power amplifier is energized by a fused 12 volt output from the radio receiver whenever the radio is turned on. The power amplifier receives the sound signal inputs for four speaker channels from the radio receiver, then sends the amplified speaker outputs for each of those channels to the six Infinity speakers. For complete circuit diagrams, refer to the appropriate wiring information. The wiring information includes wiring diagrams, proper wire and connector repair procedures, details of wire harness routing and retention, connector pin-out information and location views for the various wire harness connectors, splices and grounds.

DIAGNOSIS AND TESTING

The power amplifier unit should be checked if there is no sound output noted from the speakers. For diagnosis of the power amplifier, (Refer to 8 - ELECTRICAL/AUDIO/SPEAKER - DIAGNOSIS AND TESTING). For complete circuit diagrams, refer to the appropriate wiring information. The wiring information includes wiring diagrams, proper wire and connector repair procedures, details of wire harness routing and retention, connector pin-out information and location views for the various wire harness connectors, splices and grounds.

REMOVAL

(1) Disconnect and isolate the battery negative cable.

(2) Unlatch and lift the right rear seat cushion to the upright position.

(3) Disconnect the two right body wire harness connectors from the connector receptacles on the right end of the power amplifier (Fig. 1).

(4) Remove the three nuts that secure the power amplifier to the three studs on the floor panel.

(5) Remove the power amplifier from the three floor panel studs.

INSTALLATION

(1) Position the power amplifier onto the three floor panel studs.

(2) Install and tighten the three nuts that secure the power amplifier to the three studs on the floor panel. Tighten the nuts to 11.8 N·m (105 in. lbs.).

(3) Reconnect the two right body wire harness connectors to the connector receptacles on the right end of the power amplifier.

(4) Lower the right rear seat cushion to the floor panel.

(5) Reconnect the battery negative cable.

AMPLIFIER (Continued)

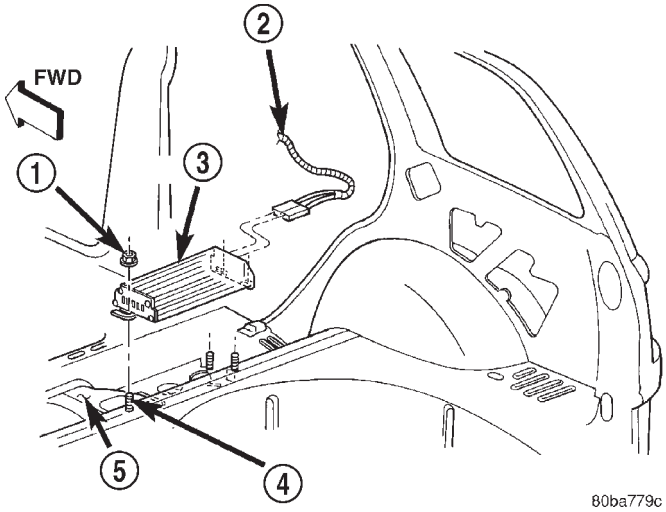

Fig. 1 Power Amplifier Remove/Install

1 - NUT (3)
2 - RIGHT BODY WIRE HARNESS
3 - AMPLIFIER
4 - STUD (3)
5 - RIGHT REAR FLOOR PANEL

ANTENNA BODY & CABLE

DESCRIPTION

The antenna body and cable are not readily visible in their installed positions in the vehicle (Fig. 2). The most visible component of the antenna body and cable are the antenna adapter and the antenna cap nut, which are located on the top of the right front fender panel of the vehicle, near the right end of the cowl plenum. The antenna body and cable are secured below the fender panel by the antenna cap nut through a prefabricated and dedicated mounting hole in the top of the right front fender. The primary coaxial antenna cable is then routed beneath the fender sheet metal and through a prefabricated and dedicated cable entry hole in the right cowl side panel into the interior of the vehicle. Inside the vehicle, the primary coaxial cable is connected to a secondary instrument panel antenna coaxial cable with an in-line connector that is located behind the right end of the instrument panel. The secondary coaxial cable is then routed behind the instrument panel to the back of the radio. Vehicles ordered with the radio delete option have a molded plastic plug installed in the antenna mounting hole on the right front fender, and a plastic plug installed in the cable entry hole of the right cowl side panel in place of the antenna body and cable.

The factory-installed radio antenna body and cable consists of the following components:

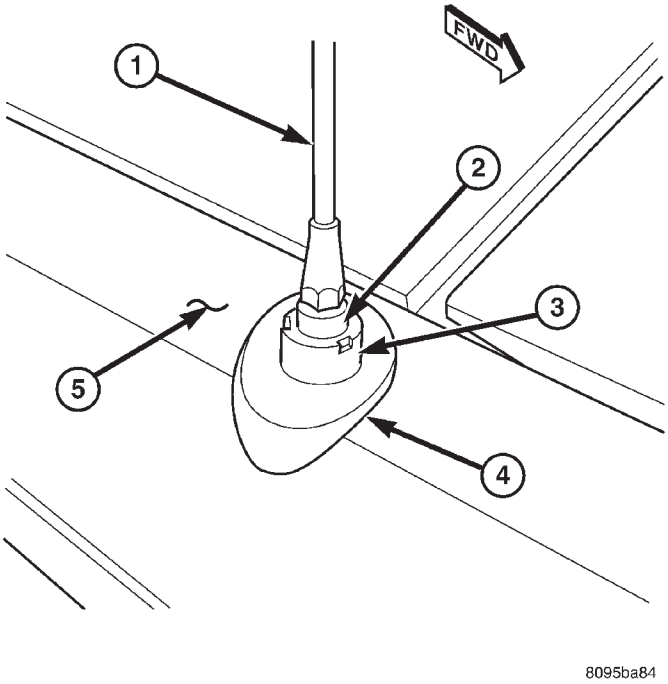

Fig. 2 Antenna Body and Cable

1 - MAST
2 - BODY & CABLE
3 - CAP NUT
4 - ADAPTER
5 - RIGHT FRONT FENDER

- **Antenna adapter** - The antenna adapter is sometimes also referred to as the antenna bezel or escutcheon.
- **Antenna body** - The die cast white metal antenna body is the mating structure between the antenna mast and the primary antenna coaxial cable.
- **Antenna cable** - This vehicle uses a two-piece antenna coaxial cable. The primary antenna cable is integral to the antenna body, and the secondary antenna cable connects the primary cable to the radio.
- **Antenna cap nut** - The antenna cap nut is a special, bright-plated threaded fastener that captures the antenna adapter and retains the antenna body to the fender sheet metal.

The components of the radio antenna body and cable cannot be adjusted or repaired. All factory-installed radios automatically compensate for radio antenna trim. Therefore, no antenna trimmer adjustment is required or possible after replacing the antenna body and cable or the radio. If an antenna body and cable component is damaged or faulty, it must be replaced. Other than the primary antenna cable, which is integral to the antenna body, the indi-

ANTENNA BODY & CABLE (Continued)

vidual components of the antenna are available for service replacement.

OPERATION

The antenna body and cable connects the antenna mast to the radio. The radio antenna is an electromagnetic circuit component used to capture radio frequency signals that are broadcast by local commercial radio stations in both the Amplitude Modulating (AM) and Frequency Modulating (FM) frequency ranges. These electromagnetic radio frequency signals induce small electrical modulations into the antenna as they move past the mast. The antenna body transfers the weak electromagnetic radio waves induced into the rigid antenna mast into the center conductor of the flexible primary antenna coaxial cable. The braided outer shield of the antenna coaxial cable is grounded through both the antenna body and the radio chassis, effectively shielding the radio waves as they are conducted to the radio. The radio then tunes and amplifies the weak radio signals into stronger electrical signals in order to operate the audio system speakers.

The antenna body includes an integral flange that mates with and grounds the antenna body to the underside of the fender panel sheet metal. Above the fender panel, the antenna body has a short nipple that is externally threaded to accept the antenna cap nut. Inside the nipple is a plastic insulator tube, and inside this insulator is an internally threaded metal receptacle that accepts the adapter stud on the bottom of the antenna mast. The antenna adapter serves as an above fender interface to mount and secure the antenna body to the vehicle. The antenna adapter is a black molded plastic component that provides a functional transition between the top of the fender and the antenna cap nut, while concealing the edges of the antenna mounting hole and protecting the painted finish of the fender from marring as the antenna cap nut is tightened. The adapter is installed over and shrouds the threaded nipple of the antenna body, which is installed from under and protrudes through the top of the mounting hole in the fender. The antenna cap nut is installed on top of the antenna adapter and tightened onto the external threads of the antenna body nipple to effectively secure and ground the antenna body to the fender. Three notches on the outer circumference of the cap nut are engaged by matching projections of an antenna nut wrench (Special Tool C-4816) to facilitate the removal and installation of this special fastener. Proper tightening of the antenna cap nut is critical to ensuring proper grounding of the antenna body to the fender sheet metal, which is necessary for clear radio signal reception.

A short length of coaxial cable serves as the primary antenna cable. The center conductor of the cable is connected to the antenna mast receptacle. The outer wire mesh of the cable is connected to and grounded through the antenna body. One end of the primary antenna cable is securely crimped to the lower end of the antenna body, while the opposite end features a simple push/pull-type male coaxial cable connector that serves as the in-line connector to the instrument panel (secondary) antenna coaxial cable. The primary coaxial cable includes a grommet that seals the cable to an entry hole in the right cowl side outer panel where the cable passes into the passenger compartment of the vehicle. The secondary antenna cable has a push/pull-type male coaxial cable connector on the radio end, and a push/pull-type female coaxial cable connector on the opposite end, which serves as the in-line connector to the primary antenna cable. In the passenger compartment the primary cable is routed to the lower right side of the instrument panel, where it is connected to the secondary instrument panel antenna cable. The instrument panel antenna cable is routed near the instrument panel wire harness through the instrument panel to the radio and is secured to the instrument panel structural support with small metal push-on retainers. This two-piece antenna cable arrangement allows the instrument panel or the antenna body and cable to be removed or installed without disturbing the radio.

DIAGNOSIS AND TESTING - ANTENNA

The following four tests are used to diagnose the antenna with an ohmmeter:

- **Test 1** - Mast to ground test
- **Test 2** - Tip-of-mast to tip-of-conductor test
- **Test 3** - Body ground to battery ground test
- **Test 4** - Body ground to antenna coaxial cable shield test.

WARNING: ON VEHICLES EQUIPPED WITH AIRBAGS, DISABLE THE AIRBAG SYSTEM BEFORE ATTEMPTING ANY STEERING WHEEL, STEERING COLUMN, OR INSTRUMENT PANEL COMPONENT DIAGNOSIS OR SERVICE. DISCONNECT AND ISOLATE THE BATTERY NEGATIVE (GROUND) CABLE, THEN WAIT TWO MINUTES FOR THE AIRBAG SYSTEM CAPACITOR TO DISCHARGE BEFORE PERFORMING FURTHER DIAGNOSIS OR SERVICE. THIS IS THE ONLY SURE WAY TO DISABLE THE AIRBAG SYSTEM. FAILURE TO TAKE THE PROPER PRECAUTIONS COULD RESULT IN ACCIDENTAL AIRBAG DEPLOYMENT AND POSSIBLE PERSONAL INJURY.

ANTENNA BODY & CABLE (Continued)

The ohmmeter test lead connections for each test are shown in the illustration (Fig. 3).

NOTE: This model has a two-piece antenna coaxial cable. Tests 2 and 4 must be conducted in two steps to isolate an antenna cable problem. First, test the primary antenna cable (integral to the antenna body and cable) from the coaxial cable connector under the right end of the instrument panel near the right cowl side inner panel to the antenna body. Then, test the secondary antenna cable (instrument panel antenna cable) from the coaxial cable connector under the right end of the instrument panel near the right cowl side inner panel to the coaxial cable connector at the radio.

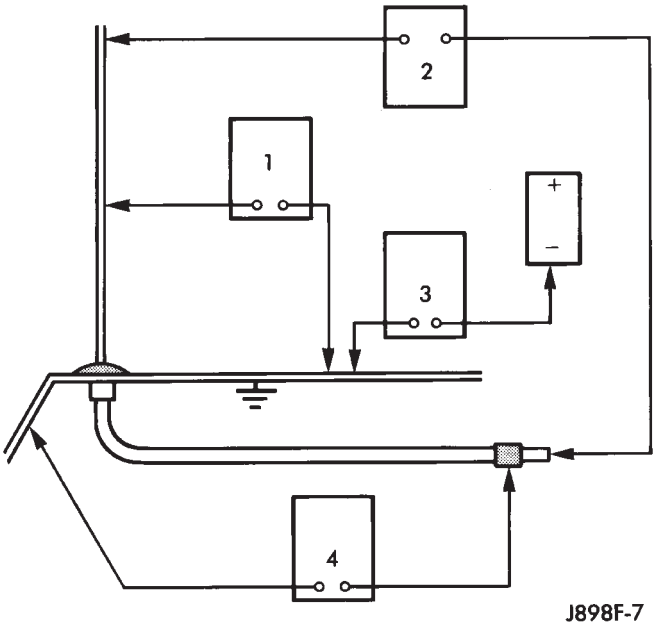

Fig. 3 Antenna Tests - Typical

TEST 1

Test 1 determines if the antenna mast is insulated from ground. Proceed as follows:

(1) Disconnect and isolate the antenna coaxial cable connector under the right end of the instrument panel near the right cowl side inner panel.

(2) Touch one ohmmeter test lead to the tip of the antenna mast. Touch the other test lead to the antenna cap nut. Check the ohmmeter reading for continuity.

(3) There should be no continuity. If OK, go to Test 2. If not OK, replace the faulty antenna body and cable.

TEST 2

Test 2 checks the antenna conductor components for an open circuit. This test should be performed first on the entire antenna circuit, from the antenna mast to the center conductor of the coaxial cable connector at the radio. If an open circuit is detected, each of the three antenna conductor components (antenna mast, antenna body and primary cable unit, instrument panel antenna secondary cable) should be isolated and tested individually to locate the exact component that is the source of the open circuit. To begin this test, proceed as follows:

(1) Disconnect the instrument panel (secondary) antenna cable coaxial connector from the back of the radio.

(2) Touch one ohmmeter test lead to the tip of the antenna mast. Touch the other test lead to the center conductor pin of the instrument panel antenna cable coaxial connector for the radio. Check the ohmmeter reading for continuity.

(3) There should be continuity. The ohmmeter should register only a fraction of an ohm resistance. High or infinite resistance indicates a damaged or open antenna conductor. If OK, go to Test 3. If not OK, isolate and test each of the individual antenna conductor components. Replace only the faulty antenna conductor component.

TEST 3

Test 3 checks the condition of the vehicle body ground connection. To begin this test, proceed as follows:

(1) This test must be performed with the battery positive cable disconnected from the battery. Disconnect and isolate both battery cables, negative cable first.

(2) Reconnect the battery negative cable.

(3) Touch one ohmmeter test lead to a good clean ground point on the vehicle fender. Touch the other test lead to the battery negative terminal post. Check the ohmmeter reading for continuity.

(4) There should be continuity. The ohmmeter should register less than one ohm resistance. High or infinite resistance indicates a loose, corroded, or damaged connection between the battery negative terminal and the vehicle body. If OK, go to Test 4. If not OK, check the battery negative cable connection to the vehicle body and the radio noise suppression ground strap connections to the engine and the vehicle body for being loose or corroded. Clean or tighten these connections as required.

TEST 4

Test 4 checks the condition of the connection between the antenna coaxial cable shield and the vehicle body ground as follows:

(1) Disconnect and isolate the antenna coaxial cable connector under the right end of the instrument panel near the right cowl side inner panel.

(2) Touch one ohmmeter test lead to a good clean ground point on the vehicle fender. Touch the other

ANTENNA BODY & CABLE (Continued)

test lead to the outer crimp on the antenna coaxial cable connector under the right end of the instrument panel near the right cowl side inner panel. Check the ohmmeter reading for continuity.

(3) There should be continuity. The ohmmeter should register less than one ohm resistance. High or infinite resistance indicates a loose, corroded, or damaged connection between the antenna body and the vehicle body or between the antenna body and the antenna coaxial cable shield. If not OK, clean the antenna body to fender mating surfaces and tighten the antenna cap nut to specifications.

(4) Check the resistance again with an ohmmeter. If the resistance is still more then one ohm, replace the faulty antenna body and cable.

ANTENNA BASE AND LEAD

WARNING: ON VEHICLES EQUIPPED WITH AIRBAGS, REFER TO ELECTRICAL, RESTRAINTS BEFORE ATTEMPTING ANY STEERING WHEEL, STEERING COLUMN, OR INSTRUMENT PANEL COMPONENT DIAGNOSIS OR SERVICE. FAILURE TO TAKE THE PROPER PRECAUTIONS COULD RESULT IN ACCIDENTAL AIRBAG DEPLOYMENT AND POSSIBLE PERSONAL INJURY.

REMOVAL

(1) Disconnect and isolate the battery negative cable.

(2) Remove the scuff plate from the right front door sill. (Refer to 23 - BODY/INTERIOR/DOOR SILL SCUFF PLATE - REMOVAL) for the procedures.

(3) Remove the trim panel from the right inner cowl side.(Refer to 23 - BODY/INTERIOR/COWL TRIM - REMOVAL) for the procedures.

(4) Reach under the passenger side of the instrument panel near the right cowl side inner panel to disconnect the antenna coaxial cable connector by pulling it apart while twisting the metal connector halves (Fig. 4). Do not pull on the cable.

(5) Remove the lower rear half of the inner liner from the right front fender wheel house. (Refer to 23 - BODY/EXTERIOR/FRONT FENDER - REMOVAL) for the procedures.

(6) Reach through the rear of the right front fender wheel house opening to access and unseat the antenna lead grommet from the hole in the right cowl side outer panel.

(7) Pull the antenna lead coaxial cable and connector out of the passenger compartment and into the right front fender wheel house through the hole in the right cowl side outer panel.

(8) Unscrew the antenna mast from the antenna base (Fig. 5).

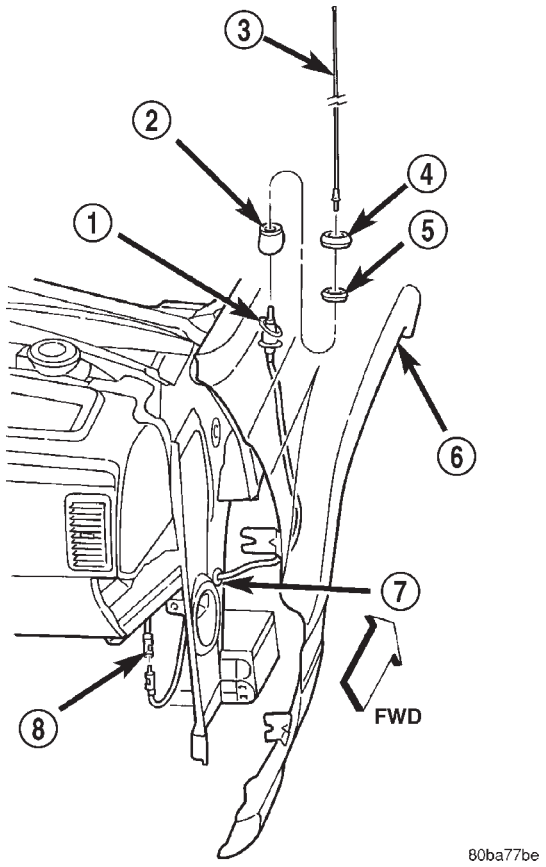

Fig. 4 Antenna Base and Lead Remove/Install

1 - BASE AND LEAD
2 - ESCUTCHEON
3 - MAST
4 - SHROUD
5 - CAP NUT
6 - RIGHT FRONT FENDER
7 - GROMMET
8 - CONNECTOR

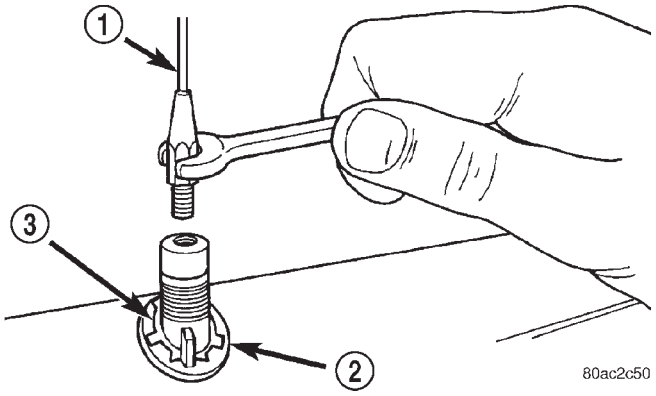

Fig. 5 Antenna Mast Remove/Install - Typical

1 - ANTENNA MAST
2 - ADAPTER
3 - CAP NUT

ANTENNA BODY & CABLE (Continued)

(9) Remove the plastic shroud from the antenna base cap nut.

(10) Remove the antenna base cap nut using an antenna nut wrench (Special Tool C-4816) (Fig. 6).

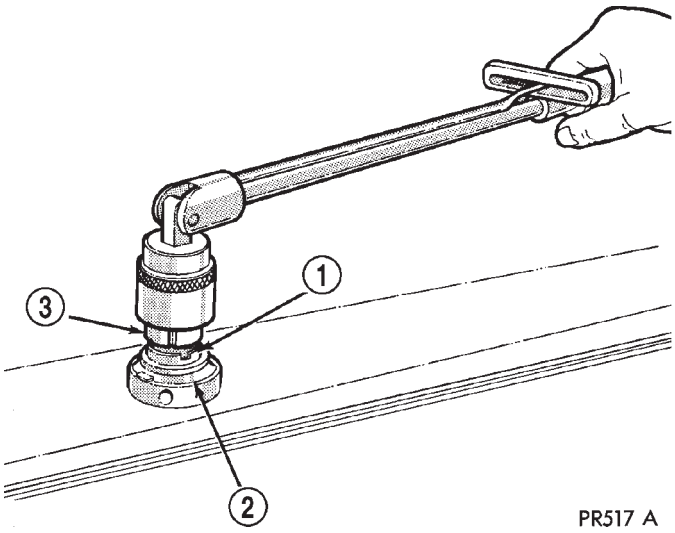

Fig. 6 Antenna Base Cap Nut Remove/Install - Typical

1 - CAP NUT
2 - ANTENNA ADAPTER
3 - TOOL

(11) Remove the antenna escutcheon from the antenna base on the top of the right front fender.

(12) Lower the antenna base from the mounting hole in the top of the right front fender.

(13) Remove the antenna base and lead from the rear of the right front fender wheel house opening.

INSTALLATION

(1) Position the antenna base and lead into the rear of the right front fender wheel house opening.

(2) Insert the antenna base into the mounting hole in the top of the right front fender.

(3) Install the antenna escutcheon onto the antenna base on the top of the right front fender.

(4) Install and tighten the antenna base cap nut using an antenna nut wrench (Special Tool C-4816). Tighten the cap nut to 6.8 N·m (60 in. lbs.).

(5) Install the plastic shroud onto the antenna base cap nut.

(6) Install and tighten the antenna mast onto the antenna base. Tighten the antenna mast to 3.3 N·m (30 in. lbs.).

(7) Reach through the rear of the right front fender wheel house opening to access and insert the antenna lead coaxial cable and connector into the passenger compartment through the hole in the right cowl side outer panel.

(8) From the right front fender wheel house, seat the antenna lead grommet into the hole in the right cowl side outer panel.

(9) Install the lower rear half of the inner liner into the right front fender wheel house. (Refer to 23 - BODY/EXTERIOR/FRONT FENDER - INSTALLATION) for the procedures.

(10) Reach under the passenger side of the instrument panel near the right cowl side inner panel to reconnect the antenna coaxial cable connector halves.

(11) Install the trim panel onto the right inner cowl side. (Refer to 23 - BODY/INTERIOR/COWL TRIM - INSTALLATION) for the procedures.

(12) Install the scuff plate onto the right front door sill. (Refer to 23 - BODY/INTERIOR/DOOR SILL SCUFF PLATE - INSTALLATION) for the procedures.

(13) Reconnect the battery negative cable.

CD CHANGER

DESCRIPTION

A factory-installed Compact Disc (CD) changer featuring a ten-CD magazine is an available option on this model when it is also equipped with the premium speaker package and a radio receiver including the CD controls feature. The CD changer is mounted in the cargo area of the passenger compartment on the right rear quarter panel. It is concealed behind a molded plastic bin with an integral hinged and latching lid that matches the interior trim of the vehicle.

The CD changer is connected to a take out from the right body wire harness and receives both ground and radio-switched battery current through the radio receiver. The controls on the radio receiver operate the CD changer through messages sent over the Programmable Communications Interface (PCI) data bus network. The two-channel audio outputs of the CD changer are hard wired back to the radio receiver, which then outputs the signal through four channels to the power amplifier. For diagnosis of the messaging functions of the radio receiver and the CD changer, or of the PCI data bus, a DRB scan tool and the proper Diagnostic Procedures manual are required.

The CD changer can only be serviced by an authorized radio repair station. See the latest Warranty Policies and Procedures manual for a current listing of authorized radio repair stations. Refer to the appropriate wiring information. The wiring information includes wiring diagrams, proper wire and connector repair procedures, details of wire harness routing and retention, connector pin-out information

CD CHANGER (Continued)

and location views for the various wire harness connectors, splices and grounds.

OPERATION

The CD changer will only operate when the ignition switch is in the On or Accessory positions, and the radio is turned on. For more information on the features, loading procedures and radio control functions for the operation of the CD changer, see the owner's manual in the vehicle glove box.

DIAGNOSIS AND TESTING

Following are tests that will help to diagnose the hard wired components and circuits of the Compact Disc (CD) changer unit. However, these tests may not prove conclusive in the diagnosis of this unit. In order to obtain conclusive testing of the CD changer unit, the Programmable Communications Interface (PCI) data bus network, the CD changer unit, the radio receiver unit and any other electronic modules that provide inputs to, or receive outputs from the audio system must be checked.

The most reliable, efficient, and accurate means to diagnose the CD changer messaging functions requires the use of a DRB scan tool and the proper Diagnostic Procedures manual. The DRB scan tool can provide confirmation that the PCI data bus is functional, that all of the electronic modules in the vehicle are sending and receiving the proper messages on the PCI data bus, and that the CD changer and the radio receiver are receiving the proper PCI messages to perform their audio system functions.

For complete circuit diagrams, refer to the appropriate wiring information. The wiring information includes wiring diagrams, proper wire and connector repair procedures, details of wire harness routing and retention, connector pin-out information and location views for the various wire harness connectors, splices and grounds.

WARNING: ON VEHICLES EQUIPPED WITH AIRBAGS, REFER TO ELECTRICAL, RESTRAINTS BEFORE ATTEMPTING ANY STEERING WHEEL, STEERING COLUMN, OR INSTRUMENT PANEL COMPONENT DIAGNOSIS OR SERVICE. FAILURE TO TAKE THE PROPER PRECAUTIONS COULD RESULT IN ACCIDENTAL AIRBAG DEPLOYMENT AND POSSIBLE PERSONAL INJURY.

COMPACT DISC CHANGER INOPERATIVE

(1) Turn the ignition switch to the On position. Turn the radio receiver on and check its operation. If OK, go to Step 2. If not OK, (Refer to 8 - ELECTRICAL/AUDIO/RADIO - OPERATION).

(2) Turn the ignition switch to the Off position. Disconnect and isolate the battery negative cable. Disconnect the right body wire harness connector from the CD changer connector receptacle. Check for continuity between the power ground (Z17) circuit of the right body wire harness connector for the CD changer and a good ground. There should be continuity. If OK, go to Step 3. If not OK, repair the open power ground circuit to the radio receiver as required.

(3) Reconnect the battery negative cable. Check for battery voltage at the B(+) circuit cavity of the right body wire harness connector for the CD changer. If OK, go to Step 4. If not OK, go to Step 5.

(4) Turn the ignition switch to the On position. Check for battery voltage at the ignition switch output circuit cavity of the right body wire harness connector for the CD changer. If OK, use a DRB scan tool and the proper Diagnostic Procedures manual for further diagnosis. If not OK, go to Step 6.

(5) Disconnect and isolate the battery negative cable. Remove the radio receiver from the instrument panel. Disconnect the DIN cable connector (C4) from the radio receiver, but do not disconnect the other wire harness connectors. Reconnect the battery negative cable. Check for battery voltage at the B(+) circuit cavity of the DIN connector receptacle on the radio receiver. If OK, repair the open B(+) circuit to the CD changer as required. If not OK, check for a shorted B(+) circuit to the CD changer and repair as required, then replace the faulty radio receiver.

(6) Turn the ignition switch to the Off position. Disconnect and isolate the battery negative cable. Remove the radio receiver from the instrument panel. Disconnect the DIN cable connector (C4) from the radio receiver, but do not disconnect the other wire harness connectors. Reconnect the battery negative cable. Turn the ignition switch to the On position. Check for battery voltage at the ignition switch output circuit cavity of the DIN connector receptacle on the radio receiver. If OK, repair the open ignition switch output circuit to the CD changer as required. If not OK, check for a shorted ignition switch output circuit to the CD changer and repair as required, then replace the faulty radio receiver.

NO SOUND OR ONLY ONE CHANNEL SOUND FROM CD

(1) Turn the ignition switch to the On position. Turn the radio receiver on and check its audio output operation. If OK, go to Step 2. If not OK, (Refer to 8 - ELECTRICAL/AUDIO/SPEAKER - OPERATION).

(2) Disconnect and isolate the battery negative cable. Disconnect the right body wire harness connector from the CD changer connector receptacle. Remove the radio receiver from the instrument panel. Disconnect the DIN cable connector (C4) from the radio receiver. Check for continuity between the

CD CHANGER (Continued)

audio ground (Z4) circuit cavity of the right body wire harness connector for the CD changer and a good ground. There should be no continuity. If OK, go to Step 3. If not OK, repair the shorted audio ground (Z4) circuit as required.

(3) Check for continuity between the audio ground (Z4) circuit cavity of the right body wire harness connector for the CD changer and the audio ground (Z4) circuit pin of the DIN cable connector for the radio receiver. There should be continuity. If OK, go to Step 4. If not OK, repair the open audio ground (Z4) circuit as required.

(4) Check for continuity between the audio out right circuit cavity of the right body wire harness connector for the CD changer and a good ground. There should be no continuity. If OK, go to Step 5. If not OK, repair the shorted audio out right circuit as required.

(5) Check for continuity between the audio out right circuit cavity of the right body wire harness connector for the CD changer and the audio out right circuit pin of the DIN cable connector for the radio receiver. There should be continuity. If OK, go to Step 6. If not OK, repair the open audio out right circuit as required.

(6) Check for continuity between the audio out left circuit cavity of the right body wire harness connector for the CD changer and a good ground. There should be no continuity. If OK, go to Step 7. If not OK, repair the shorted audio out left circuit as required.

(7) Check for continuity between the audio out left circuit cavity of the right body wire harness connector for the CD changer and the audio out left circuit pin of the DIN cable connector for the radio receiver. There should be continuity. If OK, replace the faulty CD change. If not OK, repair the open audio out left circuit as required.

REMOVAL

(1) Disconnect and isolate the battery negative cable.

(2) Release the latch and open the lid of the compact disc changer storage bin on the right side quarter trim panel (Fig. 7).

(3) Remove the two screws that secure the top of compact disc changer storage bin to the right side quarter trim panel.

(4) Grasp the bottom of the compact disc changer storage bin firmly with both hands and lift it upwards to disengage the four hook formations that secure the bin from the right side quarter trim panel.

(5) Remove the compact disc changer storage bin from the right side quarter trim panel.

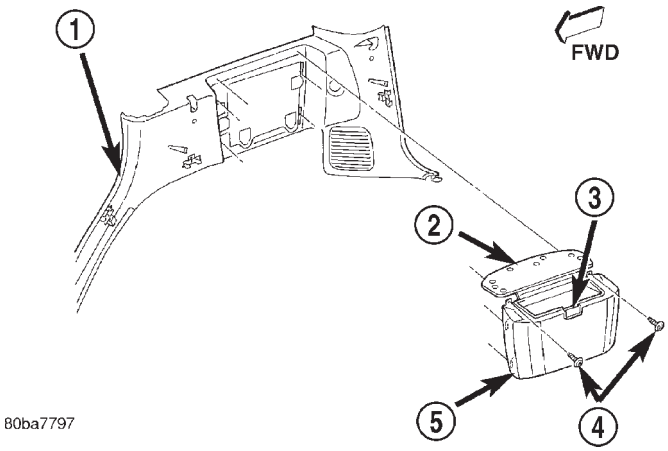

Fig. 7 Compact Disc Changer Storage Bin Remove/ Install

1 - RIGHT SIDE QUARTER TRIM PANEL
2 - LID
3 - LATCH
4 - SCREW (2)
5 - CD CHANGER STORAGE BIN

(6) Disconnect the right body wire harness connector from the connector receptacle on the forward end of the compact disc changer (Fig. 8).

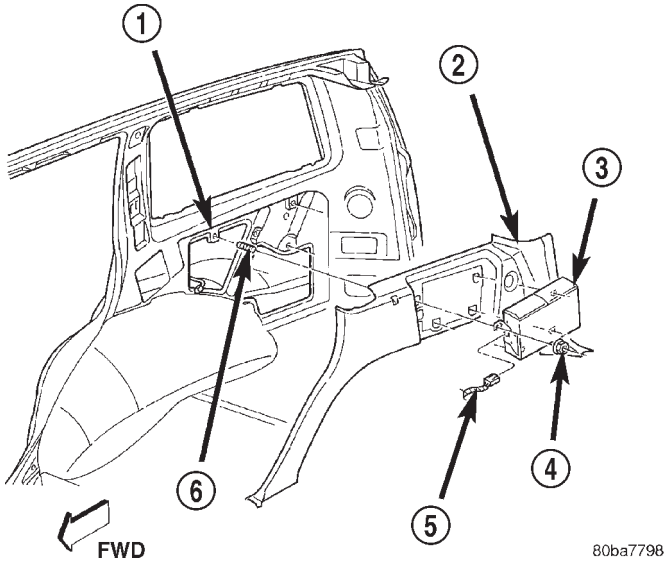

Fig. 8 Compact Disc Changer Remove/Install

1 - RIGHT SIDE QUARTER INNER PANEL
2 - RIGHT SIDE QUARTER TRIM PANEL
3 - COMPACT DISC CHANGER
4 - NUT (4)
5 - RIGHT BODY WIRE HARNESS
6 - STUD (4)

(7) Remove the four nuts that secure the compact disc changer to the four studs on the right side quarter inner panel.

CD CHANGER (Continued)

(8) Remove the compact disc changer from the right side quarter inner panel.

INSTALLATION

(1) Position the compact disc changer onto the four studs on the right side quarter inner panel.

(2) Install and tighten the four nuts that secure the compact disc changer to the four studs on the right side quarter inner panel. Tighten the nuts to 6.8 N·m (60 in. lbs.).

(3) Reconnect the right body wire harness connector to the connector receptacle on the forward end of the compact disc changer.

(4) Position the compact disc changer storage bin onto the right side quarter trim panel.

(5) Align the four hook formations on the compact disc changer storage bin with the slots in the right side quarter trim panel.

(6) Using both hands push the compact disc changer storage bin firmly and evenly toward the right side quarter trim panel far enough to engage the hooks on the bin with the slots in the panel.

(7) Using both hands push the compact disc changer storage bin firmly and evenly downward far enough to align the screw holes in the bin with the mounting holes in the right side quarter trim panel.

(8) Install and tighten the two screws that secure the top of the compact disc changer storage bin to the right side quarter trim panel. Tighten the screws to 1.7 N·m (15 in. lbs.).

(9) Close the lid of the compact disc changer storage bin.

(10) Reconnect the battery negative cable.

INSTRUMENT PANEL ANTENNA CABLE

REMOVAL

WARNING: ON VEHICLES EQUIPPED WITH AIRBAGS, REFER TO ELECTRICAL, RESTRAINTS BEFORE ATTEMPTING ANY STEERING WHEEL, STEERING COLUMN, OR INSTRUMENT PANEL COMPONENT DIAGNOSIS OR SERVICE. FAILURE TO TAKE THE PROPER PRECAUTIONS COULD RESULT IN ACCIDENTAL AIRBAG DEPLOYMENT AND POSSIBLE PERSONAL INJURY.

(1) Disconnect and isolate the battery negative cable.

(2) Remove the scuff plate from the right front door sill. (Refer to 23 - BODY/INTERIOR/DOOR SILL SCUFF PLATE - REMOVAL) for the procedures.

(3) Remove the trim panel from the right inner cowl side. (Refer to 23 - BODY/INTERIOR/COWL TRIM - REMOVAL) for the procedures.

(4) Reach under the passenger side of the instrument panel near the right cowl side inner panel to disconnect the antenna coaxial cable connector by pulling it apart while twisting the metal connector halves. Do not pull on the cable.

(5) Disengage the antenna cable retainer from the mounting hole in the wire harness mounting tab under the passenger side end of the instrument panel.

(6) Remove the radio receiver from the instrument panel. (Refer to 8 - ELECTRICAL/AUDIO/RADIO - REMOVAL) for the procedures.

(7) Remove the passenger side airbag module from the instrument panel. (Refer to 8 - ELECTRICAL/RESTRAINTS/PASSENGER AIRBAG - REMOVAL) for the procedures.

(8) Disengage the antenna cable retainer from the mounting hole in the top of the radio mount on the instrument panel structural duct (Fig. 9).

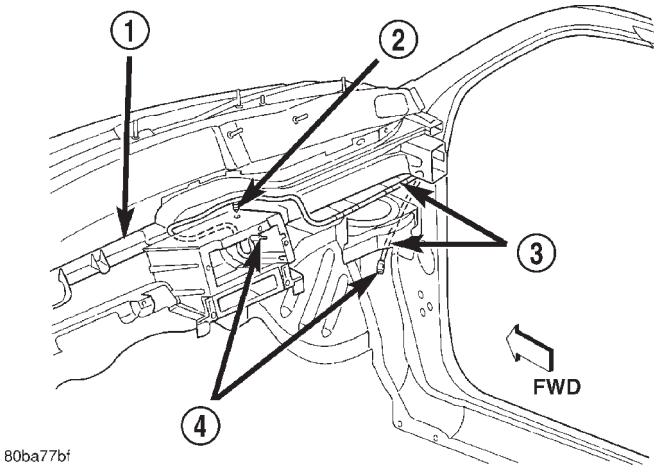

Fig. 9 Instrument Panel Antenna Cable Routing

1 - INSTRUMENT PANEL STRUCTURAL DUCT
2 - RETAINER
3 - COAXIAL CABLE
4 - COAXIAL CABLE CONNECTORS

(9) Disengage the antenna cable from the locator tabs on the top of the instrument panel structural duct above the glove box opening.

(10) Remove the antenna cable from the instrument panel.

INSTALLATION

(1) Position the antenna cable onto the instrument panel.

(2) Engage the antenna cable with the locator tabs on the top of the instrument panel structural duct above the glove box opening.

INSTRUMENT PANEL ANTENNA CABLE (Continued)

(3) Engage the antenna cable retainer into the mounting hole in the top of the radio mount on the instrument panel structural duct.

(4) Install the passenger side airbag module onto the instrument panel. (Refer to 8 - ELECTRICAL/RESTRAINTS/PASSENGER AIRBAG - INSTALLATION) for the procedures.

(5) Install the radio receiver onto the instrument panel. (Refer to 8 - ELECTRICAL/AUDIO/RADIO - INSTALLATION) for the procedures.

(6) Engage the antenna cable retainer into the mounting hole in the wire harness mounting tab under the passenger side end of the instrument panel.

(7) Reach under the passenger side of the instrument panel near the right cowl side inner panel to reconnect the antenna coaxial cable connector halves.

(8) Install the trim panel onto the right inner cowl side. (Refer to 23 - BODY/INTERIOR/COWL TRIM - INSTALLATION) for the procedures.

(9) Install the scuff plate onto the right front door sill. (Refer to 23 - BODY/INTERIOR/DOOR SILL SCUFF PLATE - INSTALLATION) for the procedures.

(10) Reconnect the battery negative cable.

RADIO

DESCRIPTION

Available factory-installed radio receivers for this model include an AM/FM/cassette (RAS sales code), an AM/FM/cassette/3-band graphic equalizer with CD changer control feature (RBN sales code), or an AM/FM/CD/cassette/3-band graphic equalizer (RAZ sales code). All factory-installed radio receivers, except the RAS sales code, can communicate on the Programmable Communications Interface (PCI) data bus network through a separate wire harness connector. All factory-installed receivers are stereo Electronically Tuned Radios (ETR) and include an electronic digital clock function.

These radio receivers can only be serviced by an authorized radio repair station. See the latest Warranty Policies and Procedures manual for a current listing of authorized radio repair stations.

All factory-installed radios are readily identifiable by a three-digit alphabetical sales code, which is imprinted on the face plate lens just below a Pentastar logo (Fig. 10).

All vehicles are equipped with an Ignition-Off Draw (IOD) fuse that is removed when the vehicle is shipped from the factory. This fuse feeds various accessories that require battery current when the ignition switch is in the Off position, including the clock. The IOD fuse is removed to prevent battery discharge during vehicle storage.

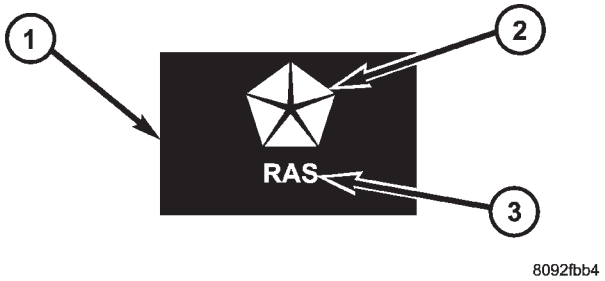

Fig. 10 Radio Sales Code - Typical

1 - FACE PLATE
2 - LOGO
3 - SALES CODE

When removing or installing the IOD fuse, it is important that the ignition switch be in the Off position. Failure to place the ignition switch in the Off position can cause the radio display to become scrambled when the IOD fuse is removed and replaced. Removing and replacing the IOD fuse again, with the ignition switch in the Off position, will correct the scrambled display condition.

The IOD fuse should be checked if the radio or clock displays are inoperative. The IOD fuse is located in the Power Distribution Center (PDC). Refer to the fuse layout label on the underside of the PDC cover for IOD fuse identification and location.

OPERATION

The radio receiver operates on ignition switched battery current that is available only when the ignition switch is in the On or Accessory positions. The electronic digital clock function of the radio operates on fused battery current supplied through the IOD fuse, regardless of the ignition switch position.

For more information on the features, setting procedures, and control functions for each of the available factory-installed radio receivers, see the owner's manual in the vehicle glove box. For complete circuit diagrams, refer to the appropriate wiring information. The wiring information includes wiring diagrams, proper wire and connector repair procedures, details of wire harness routing and retention, connector pin-out information and location views for the various wire harness connectors, splices and grounds.

DIAGNOSIS AND TESTING

If the vehicle is equipped with the optional remote radio switches located on the steering wheel and the problem being diagnosed is related to one of the symptoms listed below, be certain to check the remote radio switches and circuits. (Refer to 8 -

RADIO (Continued)

ELECTRICAL/AUDIO/REMOTE SWITCHES - OPERATION).

- Stations changing with no remote radio switch input
- Radio memory presets not working properly
- Volume changes with no remote radio switch input
- Remote radio switch buttons taking on other functions
- CD player skipping tracks
- Mode (AM, FM, CD, CD changer) changes with no remote radio switch input
- Remote radio switch inoperative.

For complete circuit diagrams, refer to the appropriate wiring information. The wiring information includes wiring diagrams, proper wire and connector repair procedures, details of wire harness routing and retention, connector pin-out information and location views for the various wire harness connectors, splices and grounds.

WARNING: ON VEHICLES EQUIPPED WITH AIRBAGS, REFER TO ELECTRICAL, RESTRAINTS BEFORE ATTEMPTING ANY STEERING WHEEL, STEERING COLUMN, OR INSTRUMENT PANEL COMPONENT DIAGNOSIS OR SERVICE. FAILURE TO TAKE THE PROPER PRECAUTIONS COULD RESULT IN ACCIDENTAL AIRBAG DEPLOYMENT AND POSSIBLE PERSONAL INJURY.

CAUTION: The speaker output of the radio receiver is a “floating ground” system. Do not allow any speaker lead to short to ground, as damage to the radio receiver may result.

(1) Check the fused B(+) fuse in the junction block. If OK, go to Step 2. If not OK, repair the shorted circuit or component as required and replace the faulty fuse.

(2) Check for battery voltage at the fused B(+) fuse in the junction block. If OK, go to Step 3. If not OK, repair the open fused B(+) circuit to the Power Distribution Center (PDC) fuse as required.

(3) Check the fused ignition switch output (acc/run) fuse in the junction block. If OK, go to Step 4. If not OK, repair the shorted circuit or component as required and replace the faulty fuse(s).

(4) Turn the ignition switch to the On position. Check for battery voltage at the fused ignition switch output (acc/run) fuse in the junction block. If OK, go to Step 5. If not OK, repair the open fused ignition switch output (acc/run) circuit to the ignition switch as required.

(5) Turn the ignition switch to the Off position. Disconnect and isolate the battery negative cable. Remove the radio receiver from the instrument panel, but do not disconnect the wire harness connectors. Check for continuity between the radio receiver chassis and a good ground. There should be continuity. If OK, go to Step 6. If not OK, repair the open ground circuit to ground as required.

(6) Test the radio receiver antenna. (Refer to 8 - ELECTRICAL/AUDIO/ANTENNA BODY & CABLE - DIAGNOSIS AND TESTING). If OK, go to Step 7. If not OK, replace the faulty antenna or coaxial cable as required.

(7) Connect the battery negative cable. Turn the ignition switch to the On position. Check for battery voltage at the fused ignition switch output (acc/run) circuit cavity of the left (gray) radio wire harness connector. If OK, go to Step 8. If not OK, repair the open fused ignition switch output (acc/run) circuit to the junction block fuse as required.

(8) Turn the ignition switch to the Off position. Check for battery voltage at the fused B(+) circuit cavity of the left (gray) radio wire harness connector. If OK, replace the faulty radio receiver. If not OK, repair the open fused B(+) circuit to the junction block fuse as required.

REMOVAL

WARNING: ON VEHICLES EQUIPPED WITH AIRBAGS, REFER TO ELECTRICAL, RESTRAINTS BEFORE ATTEMPTING ANY STEERING WHEEL, STEERING COLUMN, OR INSTRUMENT PANEL COMPONENT DIAGNOSIS OR SERVICE. FAILURE TO TAKE THE PROPER PRECAUTIONS COULD RESULT IN ACCIDENTAL AIRBAG DEPLOYMENT AND POSSIBLE PERSONAL INJURY.

(1) Disconnect and isolate the battery negative cable.

(2) Remove the center upper bezel from the instrument panel.(Refer to 23 - BODY/INSTRUMENT PANEL - REMOVAL).

(3) Remove the four screws that secure the radio receiver to the instrument panel (Fig. 11).

(4) Pull the radio receiver out from the instrument panel far enough to access the instrument panel wire harness connectors and the antenna coaxial cable connector.

(5) Disconnect the instrument panel wire harness connectors and the antenna coaxial cable connector from the receptacles on the rear of the radio receiver.

(6) Remove the radio receiver from the instrument panel.

RADIO (Continued)

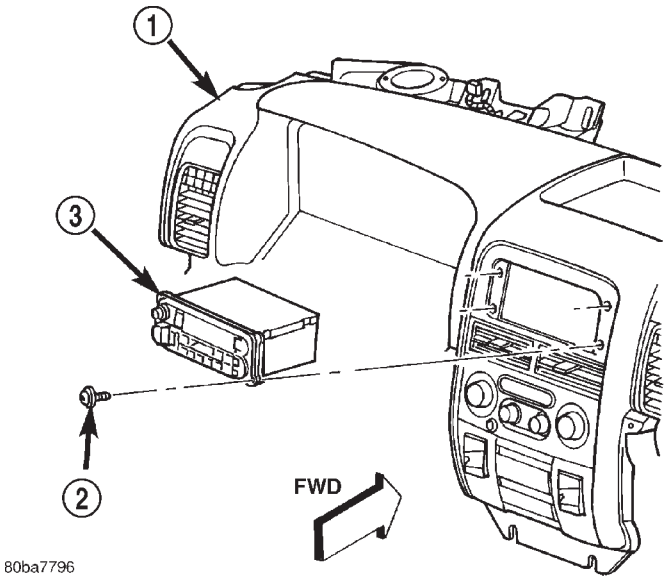

Fig. 11 Radio Remove/Install

1 - INSTRUMENT PANEL
2 - SCREW (4)
3 - RADIO RECEIVER

INSTALLATION

WARNING: ON VEHICLES EQUIPPED WITH AIRBAGS, REFER TO ELECTRICAL, RESTRAINTS BEFORE ATTEMPTING ANY STEERING WHEEL, STEERING COLUMN, OR INSTRUMENT PANEL COMPONENT DIAGNOSIS OR SERVICE. FAILURE TO TAKE THE PROPER PRECAUTIONS COULD RESULT IN ACCIDENTAL AIRBAG DEPLOYMENT AND POSSIBLE PERSONAL INJURY.

(1) Position the radio receiver to the instrument panel.

(2) Reconnect the instrument panel wire harness connectors and the antenna coaxial cable connector to the receptacles on the rear of the radio receiver.

(3) Position the radio receiver into the mounting hole in the instrument panel.

(4) Install and tighten the four screws that secure the radio receiver to the instrument panel. Tighten the screws to 2.2 N·m (20 in. lbs.).

(5) Install the center upper bezel onto the instrument panel. (Refer to 23 - BODY/INSTRUMENT PANEL - INSTALLATION) for the procedures.

(6) Reconnect the battery negative cable.

RADIO NOISE SUPPRESSION GROUND STRAP

DESCRIPTION

Radio Frequency Interference (RFI) and Electro-Magnetic Interference (EMI) noise suppression is accomplished primarily through circuitry internal to the radio receivers. These internal suppression devices are only serviced as part of the radio receiver.

External suppression devices that are used on this vehicle to control RFI or EMI noise include the following:

- Radio antenna base ground
- Radio receiver chassis ground wire or strap
- Engine-to-body ground strap(s)
- Exhaust system-to-body and transmission ground strap (4.7L engines only)
- Resistor-type spark plugs
- Radio suppression-type secondary ignition wiring.

For more information on the spark plugs and secondary ignition components, refer to Ignition System in Ignition System.

REMOVAL - ENGINE-TO-BODY GROUND STRAP

(1) Remove the screw that secures the engine-to-body ground strap eyelet to the lower plenum panel (Fig. 12) or (Fig. 13).

(2) On models with a 4.0L engine, remove the nut that secures the engine-to-body ground strap eyelet to the stud on the right rear side of the engine cylinder head.

(3) On models with a 4.7L engine, remove the two nuts that secure the engine-to-body ground strap eyelets to the studs on the right and left rear sides of the engine intake manifold.

(4) Remove the engine-to-body ground strap eyelet(s) from the stud(s) on the engine.

(5) Remove the engine-to-body ground strap from the engine compartment.

REMOVAL - EXHAUST-TO-BODY GROUND STRAP

(1) Raise and support vehicle.

(2) Remove fasteners from exhaust, crossmember and transmission/transfer case.

(3) Remove the ground strap.

RADIO NOISE SUPPRESSION GROUND STRAP (Continued)

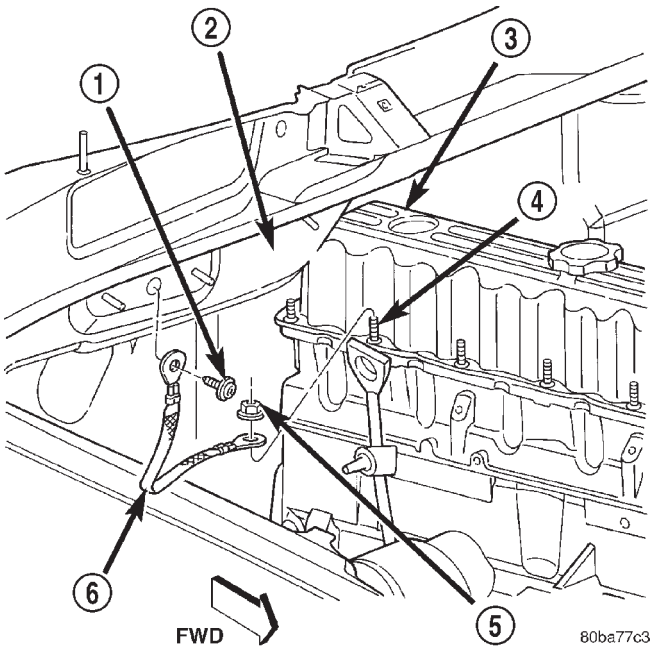

Fig. 12 Engine-To-Body Ground Strap Remove/ Install - 4.0L Engine

1 - SCREW
2 - LOWER PLENUM PANEL
3 - ENGINE
4 - STUD
5 - NUT
6 - GROUND STRAP

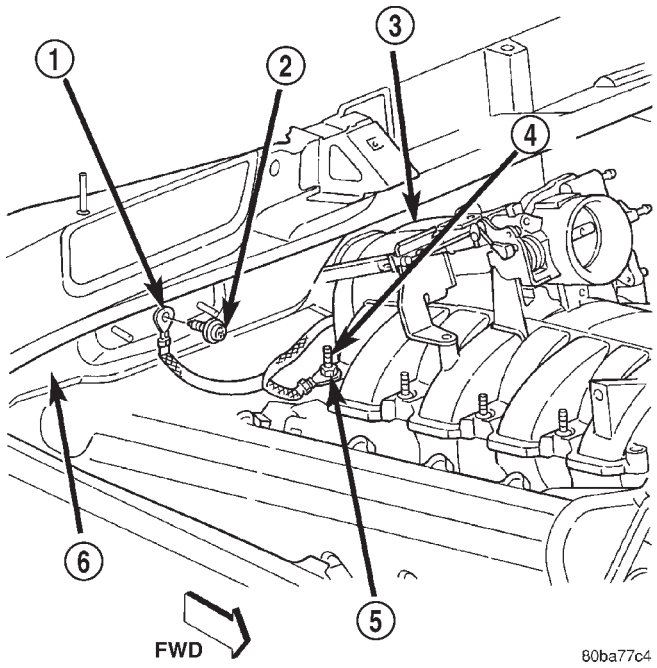

Fig. 13 Engine-To-Body Ground Strap Remove/ Install - 4.7L Engine

1 - GROUND STRAP
2 - SCREW
3 - ENGINE
4 - STUD (2)
5 - NUT (2)
6 - LOWER PLENUM PANEL

INSTALLATION - ENGINE TO BODY GROUND STRAP

(1) Position the engine-to-body ground strap into the engine compartment.

(2) Install the engine-to-body ground strap eyelet(s) onto the stud(s) on the engine.

(3) On models with a 4.0L engine, install and tighten the nut that secures the engine-to-body ground strap eyelet to the stud on the right rear side of the engine cylinder head. Tighten the nut to 5.6 N·m (50 in. lbs.).

(4) On models with a 4.7L engine, install and tighten the two nuts that secure the engine-to-body ground strap eyelets to the studs on the right and left rear sides of the engine intake manifold. Tighten the nuts to 11.3 N·m (100 in. lbs.).

(5) Install and tighten the screw that secures the engine-to-body ground strap eyelet to the lower plenum panel. Tighten the screw to 4.5 N·m (40 in. lbs.).

INSTALLATION - EXHAUST-TO-BODY GROUND STRAP

(1) Install the ground strap to the exhaust, cross-member and transmission/transfer case.

(2) Install the fasteners.

(3) Lower the vehicle.

REMOTE SWITCHES

DESCRIPTION

Remote radio control switches are included on models equipped with the optional leather-wrapped steering wheel. The two rocker-type switch units (Fig. 14) are mounted in the upper spoke covers of the rear (instrument panel side) steering wheel trim cover. The switch unit on the left side is the seek switch and has seek up, seek down, and preset station advance switch functions. The switch unit on the right side is the volume control switch and has volume up, volume down, and mode advance switch functions.

The two remote radio switch units are each retained in a mounting hole located on opposite sides of the rear steering wheel trim cover by four integral snap features. A plastic bracket on the back of each switch unit provides additional support for the unit by extending towards the center of the steering wheel where it is clamped between the steering wheel armature and the steering wheel rear trim

REMOTE SWITCHES (Continued)

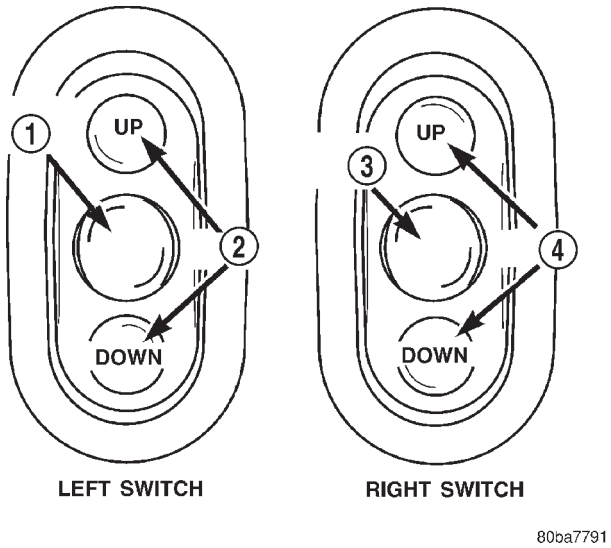

Fig. 14 Remote Radio Switches

1 - PRESET ADVANCE
2 - SEEK
3 - MODE ADVANCE
4 - VOLUME

cover mounting boss by the trim cover mounting screw.

The two remote radio switch units share a common steering wheel wire harness with the vehicle speed control switches. The steering wheel wire harness is connected to the instrument panel wire harness through the clockspring. (Refer to 8 - ELECTRICAL/ RESTRAINTS/CLOCKSPRING - DESCRIPTION) for more information on this component.

For complete circuit diagrams, refer to the appropriate wiring information. The wiring information includes wiring diagrams, proper wire and connector repair procedures, details of wire harness routing and retention, connector pin-out information and location views for the various wire harness connectors, splices and grounds.

OPERATION

The six switches in the two remote radio switch units are normally open, resistor multiplexed momentary switches that are hard wired to the Body Control Module (BCM) through the clockspring. The BCM sends a five volt reference signal to both switch units on one circuit, and senses the status of all of the switches by reading the voltage drop on a second circuit.

When the BCM senses an input (voltage drop) from any one of the remote radio switches, it sends the proper switch status messages on the Programmable Communication Interface (PCI) data bus network to the radio receiver. The electronic circuitry within the radio receiver is programmed to respond to these remote radio switch status messages by adjusting the radio settings as requested. For diagnosis of the BCM or the PCI data bus, the use of a DRB scan tool and the proper Diagnostic Procedures manual are recommended.

For more information on the features and control functions for each of the remote radio switches, see the owner's manual in the vehicle glove box.

DIAGNOSIS AND TESTING

For complete circuit diagrams, refer to the appropriate wiring information. The wiring information includes wiring diagrams, proper wire and connector repair procedures, details of wire harness routing and retention, connector pin-out information and location views for the various wire harness connectors, splices and grounds.

WARNING: ON VEHICLES EQUIPPED WITH AIRBAGS, REFER TO ELECTRICAL, RESTRAINTS BEFORE ATTEMPTING ANY STEERING WHEEL, STEERING COLUMN, OR INSTRUMENT PANEL COMPONENT DIAGNOSIS OR SERVICE. FAILURE TO TAKE THE PROPER PRECAUTIONS COULD RESULT IN ACCIDENTAL AIRBAG DEPLOYMENT AND POSSIBLE PERSONAL INJURY.

(1) Disconnect and isolate the battery negative cable. Remove the remote radio switch(es) (Fig. 15) from the steering wheel.

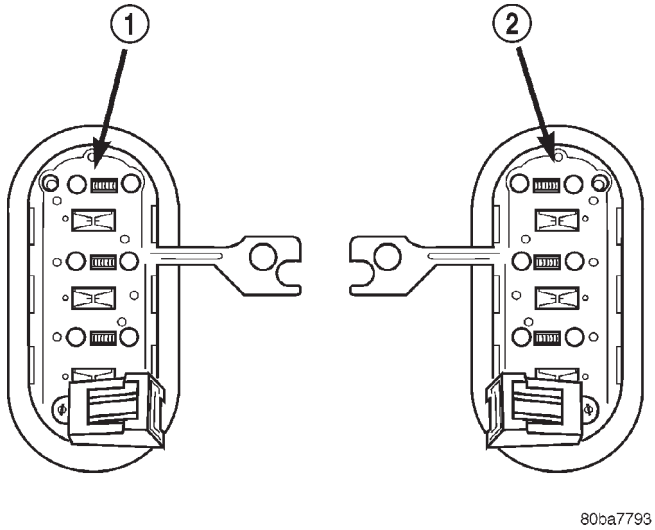

Fig. 15 Remote Radio Switches

1 - BLACK (LEFT) SWITCH
2 - WHITE (RIGHT) SWITCH

(2) Use an ohmmeter to check the switch resistances as shown in the Remote Radio Switch Test chart. If the remote radio switch resistances check OK, go to Step 3. If not OK, replace the faulty switch.

REMOTE SWITCHES (Continued)

Remote Radio Switch Test		
Switch	Switch Position	Resistance
Right (White)	Volume Up	1.210 Kilohms
Right (White)	Volume Down	3.010 Kilohms
Right (White)	Mode Advance	0.0511 Kilohms
Left (Black)	Seek Up	0.261 Kilohms
Left (Black)	Seek Down	0.681 Kilohms
Left (Black)	Pre-Set Station Advance	0.162 Kilohms

(3) Reconnect the battery negative cable. Turn the ignition switch to the On position. Check for 5 volts at the radio control mux circuit cavities of the steering wheel wire harness connectors for both remote radio switches. If OK, go to Step 4. If not OK, repair the open or shorted radio control mux circuit to the Body Control Module (BCM) as required.

(4) Disconnect and isolate the battery negative cable. Disconnect the 22-way instrument panel wire harness connector from the BCM. Check for continuity between the remote radio switch ground circuit cavities of the steering wheel wire harness connectors for both remote radio switches and a good ground. There should be no continuity. If OK, go to Step 5. If not OK, repair the shorted remote radio switch ground circuit to the BCM as required.

(5) Check for continuity between the remote radio switch ground circuit cavities of the steering wheel wire harness connectors for both remote radio switches and the 22-way instrument panel wire harness connector for the BCM. There should be continuity. If OK, refer to the proper Diagnostic Procedures manual to test the BCM and the PCI data bus. If not OK, repair the open remote radio switch ground circuit as required.

REMOVAL

WARNING: ON VEHICLES EQUIPPED WITH AIRBAGS, REFER TO ELECTRICAL, RESTRAINTS BEFORE ATTEMPTING ANY STEERING WHEEL, STEERING COLUMN, OR INSTRUMENT PANEL COMPONENT DIAGNOSIS OR SERVICE. FAILURE TO TAKE THE PROPER PRECAUTIONS COULD RESULT IN ACCIDENTAL AIRBAG DEPLOYMENT AND POSSIBLE PERSONAL INJURY.

(1) Disconnect and isolate the battery negative cable.

(2) Remove the driver side airbag module from the steering wheel. (Refer to 8 - ELECTRICAL/RESTRAINTS/DRIVER AIRBAG - REMOVAL) for the procedures.

(3) Remove the speed control switch located on the same side of the steering wheel as the remote radio switch that is being serviced. Refer to Electrical, Speed Control for the procedures.

(4) Disconnect the steering wheel wire harness connector from the connector receptacle of the remote radio switch (Fig. 16).

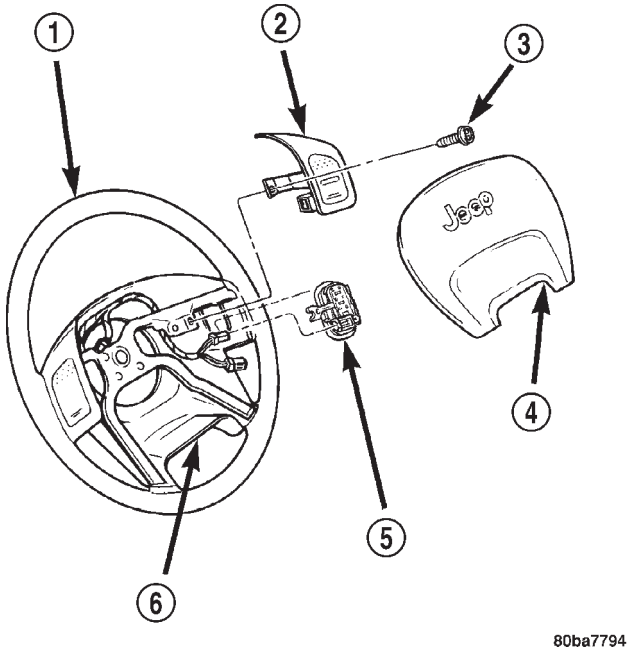

Fig. 16 Remote Radio Switches Remove/Install

1 - STEERING WHEEL
2 - SPEED CONTROL SWITCH
3 - SCREW
4 - DRIVER SIDE AIRBAG MODULE
5 - REMOTE RADIO SWITCH
6 - REAR TRIM COVER

(5) From the inside of the steering wheel rear trim cover, press firmly and evenly outward on the back of the switch to disengage the four snap features that secure the switch to the inside of the mounting hole.

(6) From the outside of the steering wheel rear trim cover, remove the remote radio switch from the trim cover mounting hole.

REMOTE SWITCHES (Continued)

INSTALLATION

WARNING: ON VEHICLES EQUIPPED WITH AIRBAGS, REFER TO ELECTRICAL, RESTRAINTS BEFORE ATTEMPTING ANY STEERING WHEEL, STEERING COLUMN, OR INSTRUMENT PANEL COMPONENT DIAGNOSIS OR SERVICE. FAILURE TO TAKE THE PROPER PRECAUTIONS COULD RESULT IN ACCIDENTAL AIRBAG DEPLOYMENT AND POSSIBLE PERSONAL INJURY.

(1) Position the remote radio switch to the mounting hole on the outside of the steering wheel rear trim cover. Be certain that the connector receptacle is oriented toward the bottom of the switch and pointed toward the center of the steering wheel.

(2) Press firmly and evenly on the remote radio switch until each of the switch snap features is fully engaged in the mounting hole of the steering wheel rear trim cover.

(3) Reconnect the steering wheel wire harness connector to the connector receptacle of the remote radio switch.

(4) Install the speed control switch onto the steering wheel. Refer to Electrical, Speed Control for the procedures.

(5) Install the driver side airbag module onto the steering wheel. (Refer to 8 - ELECTRICAL/RESTRAINTS/DRIVER AIRBAG - INSTALLATION) for the procedures.

(6) Reconnect the battery negative cable.

SPEAKER

DESCRIPTION

STANDARD

The standard equipment speaker system includes speakers in six locations. One 6.4 centimeter (2.50 inch) diameter tweeter is installed on each end of the instrument panel top pad. One 15.2 by 22.9 centimeter (6 by 9 inch) full-range speaker is located in each front door. There is also one full-range 16.5 centimeter (6.5 inch) diameter full-range speaker located in each rear door.

PREMIUM

The optional premium speaker system features six Infinity model speakers in six locations. Each of the standard speakers is replaced with Infinity model speakers. One 6.4 centimeter (2.50 inch) diameter Infinity tweeter is installed on each end of the instrument panel top pad. One 15.2 by 22.9 centimeter (6 by 9 inch) Infinity woofer is located in each front door. There is also one full-range 16.5 centimeter (6.5 inch) diameter Infinity full-range speaker located in each rear door. The premium speaker system also includes an additional Infinity power amplifier. The total available power of the premium speaker system is about 180 watts.

OPERATION

STANDARD

Each of the two tweeters and four full-range speakers used in the standard speaker system is driven by the amplifier that is integral to the factory-installed radio receiver. For complete circuit diagrams, refer to the appropriate wiring information. The wiring information includes wiring diagrams, proper wire and connector repair procedures, details of wire harness routing and retention, connector pin-out information and location views for the various wire harness connectors, splices and grounds.

PREMIUM

The six Infinity speakers used in the premium speaker system are all driven by the radio receiver through an Infinity power amplifier. For complete circuit diagrams, refer to the appropriate wiring information. The wiring information includes wiring diagrams, proper wire and connector repair procedures, details of wire harness routing and retention, connector pin-out information and location views for the various wire harness connectors, splices and grounds.

DIAGNOSIS AND TESTING

For complete circuit diagrams, refer to the appropriate wiring information. The wiring information includes wiring diagrams, proper wire and connector repair procedures, details of wire harness routing and retention, connector pin-out information and location views for the various wire harness connectors, splices and grounds.

WARNING: ON VEHICLES EQUIPPED WITH AIRBAGS, REFER TO ELECTRICAL, RESTRAINTS BEFORE ATTEMPTING ANY STEERING WHEEL, STEERING COLUMN, OR INSTRUMENT PANEL COMPONENT DIAGNOSIS OR SERVICE. FAILURE TO TAKE THE PROPER PRECAUTIONS COULD RESULT IN ACCIDENTAL AIRBAG DEPLOYMENT AND POSSIBLE PERSONAL INJURY.

CAUTION: The speaker output of the radio is a “floating ground” system. Do not allow any speaker lead to short to ground, as damage to the radio may result.

(1) Turn the ignition switch to the On position. Turn the radio receiver on. Adjust the balance and

SPEAKER (Continued)

fader controls to check the performance of each individual speaker. Note the speaker locations that are not performing correctly. Go to Step 2.

(2) Turn the radio receiver off. Turn the ignition switch to the Off position. Disconnect and isolate the battery negative cable. Remove the radio receiver from the instrument panel. If the vehicle is equipped with the Infinity speaker package, also disconnect the wire harness connectors at the power amplifier. Check both the speaker feed (+) circuit and return (–) circuit cavities for the inoperative speaker location(s) at the radio receiver wire harness connectors for continuity to ground. In each case, there should be no continuity. If OK, go to Step 3. If not OK, repair the shorted speaker feed (+) and/or return (–) circuit(s) to the speaker as required.

(3) If the vehicle is equipped with the Infinity speaker package, go to Step 6. If the vehicle is equipped with the standard speaker system, check the resistance between the speaker feed (+) circuit and return (–) circuit cavities of the radio receiver wire harness connectors for the inoperative speaker location(s). The meter should read between 2 and 12 ohms (speaker resistance). If OK, go to Step 4. If not OK, go to Step 5.

(4) Install a known good radio receiver. Connect the battery negative cable. Turn the ignition switch to the On position. Turn on the radio receiver and test the speaker operation. If OK, replace the faulty radio receiver. If not OK, turn the radio receiver off, turn the ignition switch to the Off position, disconnect and isolate the battery negative cable, remove the test radio receiver, and go to Step 5.

(5) Disconnect the wire harness connector at the inoperative speaker. Check for continuity between the speaker feed (+) circuit cavities of the radio receiver wire harness connector and the speaker wire harness connector. Repeat the check between the speaker return (–) circuit cavities of the radio receiver wire harness connector and the speaker wire harness connector. In each case, there should be continuity. If OK, replace the faulty speaker. If not OK, repair the open speaker feed (+) and/or return (–) circuit(s) as required.

(6) For each inoperative speaker location, check for continuity between the speaker feed (+) circuit cavities of the radio receiver wire harness connectors and the power amplifier wire harness connectors. Repeat the check for each inoperative speaker location between the speaker return (–) circuit cavities of the radio receiver wire harness connectors and the power amplifier wire harness connectors. In each case, there should be continuity. If OK, go to Step 7. If not OK, repair the open speaker feed (+) and/or return (–) circuit(s) as required.

(7) Check for continuity between the two ground circuit cavities of the power amplifier wire harness connector and a good ground. There should be continuity. If OK, go to Step 8. If not OK, repair the open ground circuit(s) to ground as required.

(8) Check the fused B(+) fuse for the power amplifier in the junction block. If OK, go to Step 9. If not OK, repair the shorted circuit or component as required and replace the faulty fuse.

(9) Install the radio receiver. Connect the battery negative cable. Check for battery voltage at the fused B(+) fuse for the power amplifier in the junction block. If OK, go to Step 10. If not OK, repair the open fused B(+) circuit to the Power Distribution Center (PDC) fuse as required.

(10) Check for battery voltage at the two fused B(+) circuit cavities of the power amplifier wire harness connector. If OK, go to Step 11. If not OK, repair the open fused B(+) circuit(s) to the power amplifier fuse in the junction block as required.

(11) Turn the ignition switch to the On position. Turn the radio receiver on. Check for battery voltage at the enable signal to amplifier circuit cavity of the power amplifier wire harness connector. If OK, go to Step 12. If not OK, repair the open enable signal to amplifier circuit to the radio receiver as required.

(12) Turn the radio receiver off. Turn the ignition switch to the Off position. Disconnect and isolate the battery negative cable. For each inoperative speaker location, check both the amplified feed (+) circuit and the amplified return (–) circuit cavities of the power amplifier wire harness connectors for continuity to ground. In each case there should be no continuity. If OK, go to Step 13. If not OK, repair the shorted amplified feed (+) and/or amplified return (–) circuit(s) to the speaker as required.

(13) For each inoperative speaker location, check the resistance between the amplified feed (+) circuit and the amplified return (–) circuit cavities of the power amplifier wire harness connectors. The meter should read between 2 and 12 ohms (speaker resistance). If OK, replace the faulty power amplifier. If not OK, go to Step 14.

(14) Disconnect the speaker wire harness connector at the inoperative speaker. Check for continuity between the amplified feed (+) circuit cavities of the speaker wire harness connector and the power amplifier wire harness connector. Repeat the check between the amplified return (–) circuit cavities of the speaker wire harness connector and the power amplifier wire harness connector. In each case there should be continuity. If OK, replace the faulty speaker. If not OK, repair the open amplified feed (+) and/or amplified return (–) circuit(s) as required.

SPEAKER (Continued)

REAR DOOR SPEAKER

REMOVAL

(1) Disconnect and isolate the battery negative cable.

(2) Remove the trim panel from the rear door. (Refer to 23 - BODY/DOORS - REAR/TRIM PANEL - REMOVAL) for the procedures.

(3) Remove the three screws that secure the speaker to the rear door inner panel (Fig. 17).

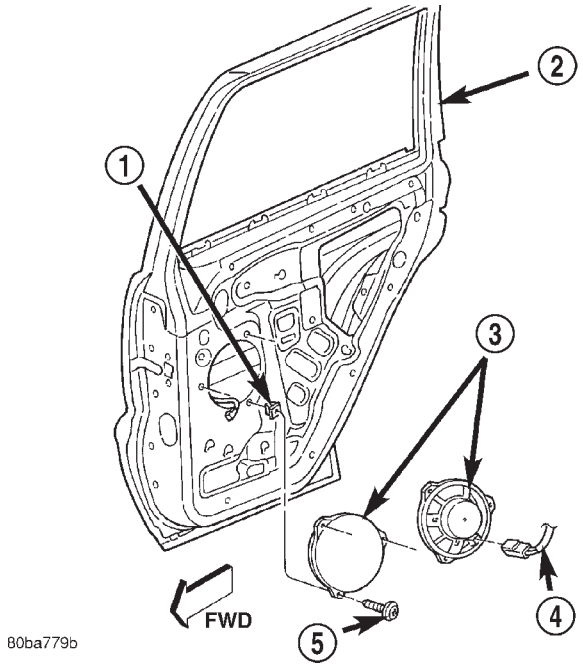

Fig. 17 Rear Door Speaker Remove/Install

1 - PLASTIC NUT (3)
2 - REAR DOOR
3 - REAR DOOR SPEAKER
4 - REAR DOOR WIRE HARNESS
5 - SCREW (3)

(4) Pull the speaker away from the rear door inner panel far enough to access the rear door wire harness connector.

(5) Disconnect the rear door wire harness connector from the speaker connector receptacle.

(6) Remove the speaker from the rear door inner panel.

INSTRUMENT PANEL SPEAKER

REMOVAL

(1) Disconnect and isolate the battery negative cable.

(2) Remove the top cover from the instrument panel. (Refer to 23 - BODY/INSTRUMENT PANEL/ INSTRUMENT PANEL TOP COVER - REMOVAL).

(3) Disconnect the instrument panel wire harness connector from the speaker wire harness connector (Fig. 18).

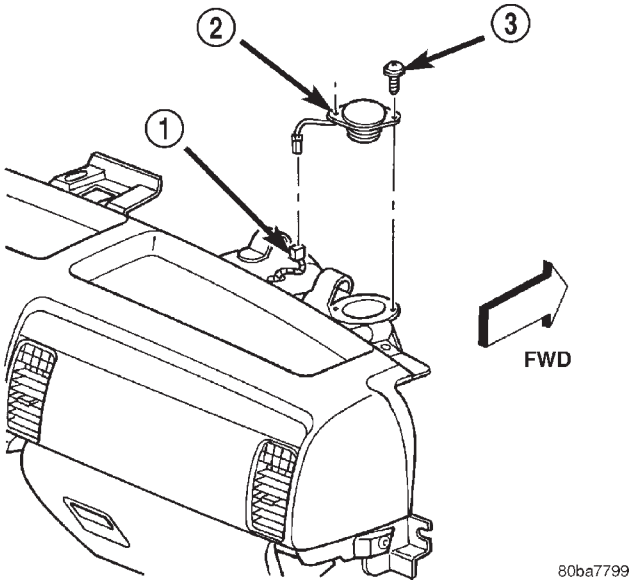

Fig. 18 Instrument Panel Speaker Remove/Install

1 - INSTRUMENT PANEL WIRE HARNESS
2 - INSTRUMENT PANEL SPEAKER
3 - SCREW (2)

(4) Remove the two screws that secure the speaker to the top of the instrument panel.

(5) Remove the speaker from the top of instrument panel.

FRONT DOOR SPEAKER

REMOVAL

(1) Disconnect and isolate the battery negative cable.

(2) Remove the trim panel from the front door. (Refer to 23 - BODY/DOOR - FRONT/TRIM PANEL - REMOVAL) for the procedures.

(3) Remove the four screws that secure the speaker to the front door inner panel (Fig. 19).

(4) Pull the speaker away from the front door inner door panel far enough to access the front door wire harness connector.

(5) Disconnect the front door wire harness connector from the speaker connector receptacle.

(6) Remove the speaker from the front door inner panel.

INSTALLATION - REAR DOOR SPEAKER

(1) Position the speaker to the rear door inner panel.

(2) Reconnect the rear door wire harness connector to the speaker connector receptacle.

SPEAKER (Continued)

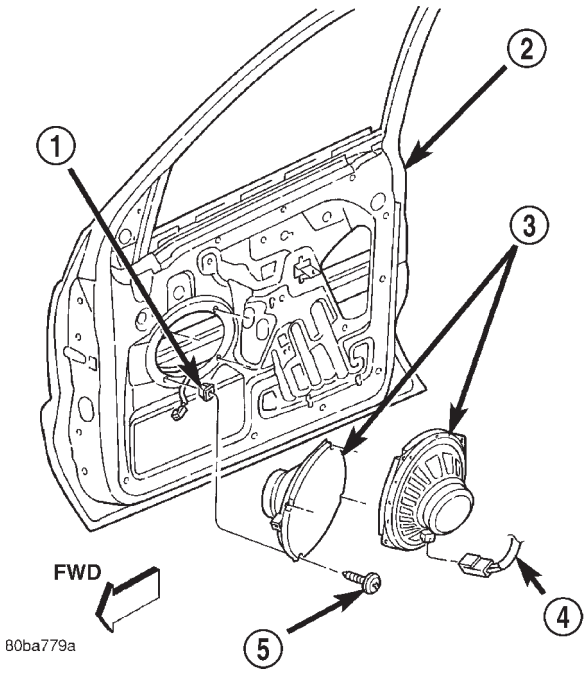

Fig. 19 Front Door Speaker Remove/Install

1 - PLASTIC NUT (4)
2 - FRONT DOOR
3 - FRONT DOOR SPEAKER
4 - FRONT DOOR WIRE HARNESS
5 - SCREW (4)

(3) Position the speaker onto the rear door inner panel.

(4) Install and tighten the three screws that secure the speaker to the rear door inner panel. Tighten the screws to 2.2 N·m (20 in. lbs.).

(5) Install the trim panel onto the rear door. (Refer to 23 - BODY/DOORS - REAR/TRIM PANEL - INSTALLATION) for the procedures.

(6) Reconnect the battery negative cable.

INSTALLATION - INSTRUMENT PANEL SPEAKER

(1) Position the speaker onto the top of the instrument panel.

(2) Install and tighten the two screws that secure the speaker to the top of the instrument panel. Tighten the screws to 2.2 N·m (20 in. lbs.).

(3) Reconnect the instrument panel wire harness connector to the speaker wire harness connector.

(4) Install the top cover onto the instrument panel. (Refer to 23 - BODY/INSTRUMENT PANEL/INSTRUMENT PANEL TOP COVER - INSTALLATIONl for the procedures.

(5) Reconnect the battery negative cable.

INSTALLATION - FRONT DOOR SPEAKER

(1) Position the speaker to the front door inner panel.

(2) Reconnect the front door wire harness connector to the speaker connector receptacle.

(3) Position the speaker onto the front door inner door panel.

(4) Install and tighten the four screws that secure the speaker to the front door inner panel. Tighten the screws to 2.2 N·m (20 in. lbs.).

(5) Install the trim panel onto the front door. (Refer to 23 - BODY/DOOR - FRONT/TRIM PANEL - INSTALLATION) for the procedures.

(6) Reconnect the battery negative cable.

CHIME/BUZZER

TABLE OF CONTENTS

	page
CHIME WARNING SYSTEM	
DESCRIPTION	1
OPERATION	2
DIAGNOSIS AND TESTING	3
CHIME WARNING SYSTEM	3

CHIME WARNING SYSTEM

DESCRIPTION

A chime warning system is standard factory-installed equipment on this model (Fig. 1). The chime warning system uses a single chime tone generator that is integral to the Body Control Module (BCM) to provide an audible indication of various vehicle conditions that may require the attention of the vehicle operator. The chime warning system includes the following major components, which are described in further detail elsewhere in this service manual:

- **Body Control Module** - The Body Control Module (BCM) is located on the Junction Block (JB) underneath the driver side end of the instrument panel. The BCM contains an integral chime tone generator, integrated circuitry, a central processing unit and the programming to provide all of the proper chime warning system features based upon the monitored inputs. The BCM circuitry monitors hard wired switch inputs, as well as message inputs received from other vehicle electronic modules on the Programmable Communications Interface (PCI) data bus network.

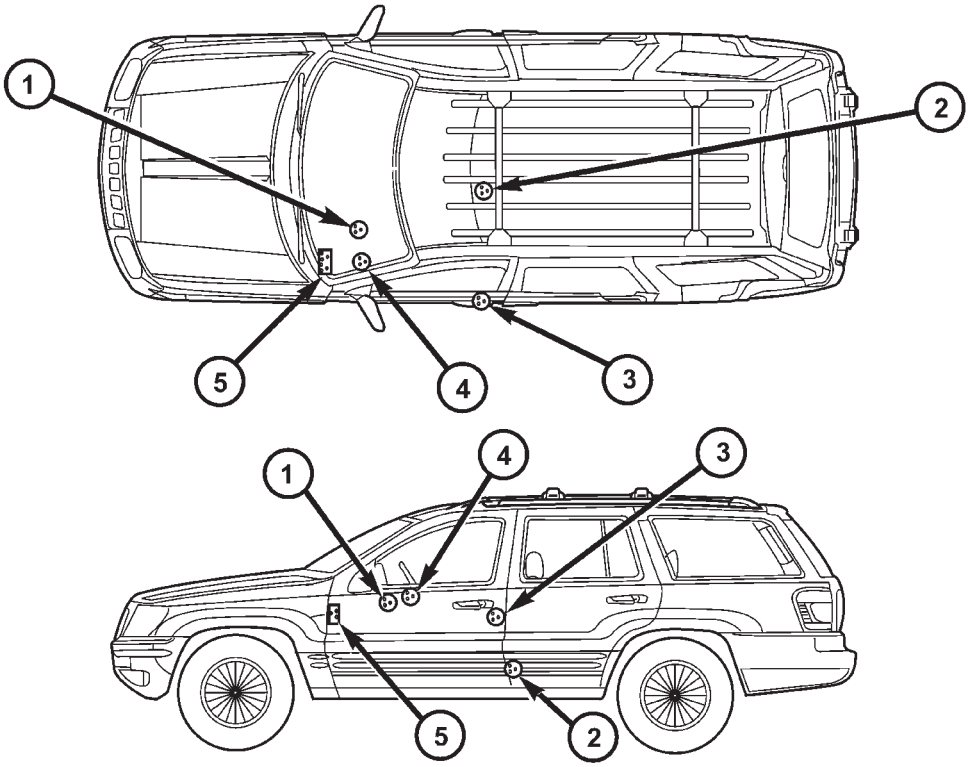

Fig. 1 Chime Warning System

1 - IGNITION SWITCH
2 - SEAT BELT SWITCH
3 - DOOR AJAR SWITCH
4 - HEADLAMP SWITCH
5 - BODY CONTROL MODULE

CHIME WARNING SYSTEM (Continued)

• **Door Ajar Switch** - A door ajar switch is integral to the driver side front door latch. This switch provides an input to the chime warning system indicating whether the driver side front door is open or closed.

• **Headlamp Switch** - The headlamp switch is integral to the left multi-function switch on the left side of the steering column. The headlamp switch provides an input to the chime warning system indicating when the exterior lamps are turned On or Off.

• **Ignition Switch** - A key-in ignition switch is integral to the ignition switch. The key-in ignition switch provides an input to the chime warning system indicating whether a key is present in the ignition lock cylinder.

• **Seat Belt Switch** - A seat belt switch is integral to the driver side front seat belt buckle-half unit. The seat belt switch provides an input to the chime warning system indicating whether the driver side front seat belt is fastened.

Hard wired circuitry connects many of the chime warning system components to each other through the electrical system of the vehicle. These hard wired circuits are integral to several wire harnesses, which are routed throughout the vehicle and retained by many different methods. These circuits may be connected to each other, to the vehicle electrical system and to the chime warning system components through the use of a combination of soldered splices, splice block connectors, and many different types of wire harness terminal connectors and insulators. Refer to the appropriate wiring information. The wiring information includes wiring diagrams, proper wire and connector repair procedures, further details on wire harness routing and retention, as well as pin-out and location views for the various wire harness connectors, splices and grounds.

The BCM chime warning system circuitry and the integral chime tone generator cannot be adjusted or repaired. If the BCM or the chime tone generator are damaged or faulty, the BCM unit must be replaced.

OPERATION

The chime warning system is designed to provide an audible output as an indication of various conditions that may require the attention or awareness of the vehicle operator. The chime warning system components operate on battery current received through the Ignition-Off Draw (IOD) fuse in the Power Distribution Center (PDC) on a non-switched fused B(+) circuit so that the system may operate regardless of the ignition switch position.

The chime warning system provides an audible indication to the vehicle operator under the following conditions:

• **Fasten Seat Belt Warning** - The Body Control Module (BCM) chime tone generator will generate repetitive chime tones at a slow rate to announce that a hard wired input from the seat belt switch indicates that the driver side front seat belt is not fastened with the ignition switch in the On position. Unless the driver side front seat belt is fastened, the chimes will continue to sound for a duration of about six seconds each time the ignition switch is turned to the On position or until the driver side front seat belt is fastened, whichever occurs first.

• **Head/Park Lights-On Warning** - The BCM chime tone generator will generate repetitive chime tones at a fast rate to announce that a Programmable Communications Interface (PCI) data bus driver door ajar message received from the Driver Door Module (DDM), along with hard wired inputs from the headlamp switch (left multi-function switch) and the ignition switch, indicate that the exterior lamps are turned On with the driver side front door opened and the ignition switch in the Off position. The chimes will continue to sound until the exterior lamps are turned Off, the driver side front door is closed, or the ignition switch is turned to the On position, whichever occurs first.

• **Key-In-Ignition Warning** - The BCM chime tone generator will generate repetitive chime tones at a fast rate to announce that a PCI data bus driver door ajar message received from the DDM, along with hard wired inputs from the key-in-ignition switch (ignition switch) and the ignition switch, indicate that the key is in the ignition lock cylinder with the driver side front door opened and the ignition switch in the Off position. The chimes will continue to sound until the key is removed from the ignition lock cylinder, the driver side front door is closed, or the ignition switch is turned to the On position, whichever occurs first.

• **Overspeed Warning** - The BCM chime tone generator will generate repetitive chime tones at a slow rate to announce that a PCI data bus vehicle speed message received from the Powertrain Control Module (PCM) indicates that the vehicle speed is above 120 kilometers-per-hour (75 miles-per-hour). The chimes will continue to sound until the vehicle speed message indicates that the vehicle speed is below 120 kilometers-per-hour (75 miles-per-hour). This feature is only enabled on a BCM that has been programmed with a Middle East Gulf Coast Country (GCC) country code.

• **Tactile Beep Support** - The BCM chime tone generator will generate a single beep tone each time a PCI data bus tactile beep request message is received from the Electronic Vehicle Information Center (EVIC) or the Sentry Key Immobilizer Module (SKIM). This beep tone provides an audible confirma-

CHIME WARNING SYSTEM (Continued)

tion that an EVIC button was completely depressed, or that the optional Sentry Key Immobilizer System (SKIS) is in the "Customer Learn" mode, which is used for programming additional sentry key transponders.

- **Warning Beep Support** - The BCM chime tone generator will generate a short series of beep tones each time a PCI data bus warning beep request message is received from the EVIC or the Electro-Mechanical Instrument Cluster (EMIC). These beep tones provide an audible alert to the vehicle operator that supplements certain visual warning indications displayed by the EVIC and/or the EMIC.

The BCM provides chime service for all available features in the chime warning system. The BCM relies upon its internal programming and hard wired inputs from the headlamp switch (left multi-function switch), and the key-in ignition switch (ignition switch) to provide chime service for the head/park lights-on reminder and the key-in ignition reminder. For seat belt reminder chime service, the BCM uses a hard wired input from the driver seat belt switch on the seat belt switch sense circuit. The BCM relies upon electronic message inputs received from other electronic modules over the PCI data bus network to provide chime service for all of the remaining chime warning system features.

Upon receiving the proper inputs, the BCM activates the integral chime tone generator to provide the audible chime tone to the vehicle operator. The chime tone generator in the BCM is capable of producing single short beeps, a short series of beeps, or repeated chime tones at two different rates, slow or fast. The slow chime rate is about fifty chime tones per minute, while the fast chime rate is about 180 chime tones per minute. The internal programming of the BCM determines the priority of each chime tone request input that is received, as well as the rate and duration of each chime tone that is to be generated.

The hard wired chime warning system inputs to the BCM, as well as other hard wired circuits for this system may be diagnosed and tested using conventional diagnostic tools and procedures. However, conventional diagnostic methods may not prove conclusive in the diagnosis of the BCM or the PCI data bus network. The most reliable, efficient and accurate means to diagnose the BCM and the PCI data bus network inputs for the chime warning system requires the use of a DRBIII® scan tool and the appropriate diagnostic information. See the owner's manual in the vehicle glove box for more information on the features provided by the chime warning system.

DIAGNOSIS AND TESTING - CHIME WARNING SYSTEM

Refer to the appropriate wiring information. The wiring information includes wiring diagrams, proper wire and connector repair procedures, further details on wire harness routing and retention, as well as pin-out and location views for the various wire harness connectors, splices and grounds. The hard wired chime warning system inputs to the Body Control Module (BCM), as well as other hard wired circuits for this system may be diagnosed and tested using conventional diagnostic tools and procedures. However, conventional diagnostic methods may not prove conclusive in the diagnosis of the instrument cluster or the Programmable Communications Interface (PCI) data bus network. The most reliable, efficient and accurate means to diagnose the BCM and the PCI data bus network inputs for the chime warning system requires the use of a DRBIII® scan tool and the appropriate diagnostic information.

WARNING: ON VEHICLES EQUIPPED WITH AIRBAGS, DISABLE THE AIRBAG SYSTEM BEFORE ATTEMPTING ANY STEERING WHEEL, STEERING COLUMN, OR INSTRUMENT PANEL COMPONENT DIAGNOSIS OR SERVICE. DISCONNECT AND ISOLATE THE BATTERY NEGATIVE (GROUND) CABLE, THEN WAIT TWO MINUTES FOR THE AIRBAG SYSTEM CAPACITOR TO DISCHARGE BEFORE PERFORMING FURTHER DIAGNOSIS OR SERVICE. THIS IS THE ONLY SURE WAY TO DISABLE THE AIRBAG SYSTEM. FAILURE TO TAKE THE PROPER PRECAUTIONS COULD RESULT IN ACCIDENTAL AIRBAG DEPLOYMENT AND POSSIBLE PERSONAL INJURY.

CHIME WARNING SYSTEM (Continued)

CONDITION	POSSIBLE CAUSES	CORRECTION
NO SEAT BELT WARNING CHIME WITH SEAT BELT UNBUCKLED, BUT OTHER CHIME FEATURES OK	1. Seat belt switch ground circuit open.	1. Check for continuity between the ground circuit cavity of the wire harness connector for the seat belt switch and a good ground. Repair the ground circuit, if required.
	2. Seat belt switch sense circuit open.	2. Check for continuity between the seat belt switch sense circuit cavities of the wire harness connector for the seat belt switch and the body wire harness junction block C1 connector. Repair the seat belt switch sense circuit, if required.
	3. Faulty seat belt switch.	3. Check for continuity between the ground circuit cavity and the seat belt switch sense circuit cavity of the seat belt switch pigtail wire connector. There should be continuity with the seat belt unbuckled. Replace the faulty seat belt, if required.
SEAT BELT WARNING CHIME WITH SEAT BELT BUCKLED	1. Seat belt switch sense circuit shorted.	1. With the wire harness connector for the seat belt switch and the body wire harness junction block C1 connector disconnected, there should be no continuity between the seat belt switch sense circuit and a good ground. Repair the seat belt switch sense circuit, if required.
	2. Faulty seat belt switch.	2. Check for continuity between the ground circuit cavity and the seat belt switch sense circuit cavity of the seat belt switch pigtail wire connector. There should be no continuity with the seat belt buckled. Replace the faulty seat belt, if required.
NO KEY-IN IGNITION OR HEADLAMPS-ON WARNING CHIME WITH DRIVER SIDE FRONT DOOR OPEN	1. Faulty door ajar switch or circuits.	1. Check that interior lights illuminate with driver door open. If not OK, repair the interior lighting system as required.
	2. Faulty headlamp switch (left multi-function switch) or circuits.	2. Check for proper exterior lighting operation. If not OK, repair the exterior lighting system as required.
	3. Key-in ignition switch sense circuit open.	3. Check for continuity between the key-in ignition switch sense circuit cavities of the instrument panel wire harness C2 connector for the ignition switch and the body wire harness C1 connector for the junction block. Repair the key-in ignition switch sense circuit, if required.
	4. Faulty ignition switch.	4. Check for continuity between the two terminals in the ignition switch C2 connector receptacle. There should be continuity with a key in the ignition lock cylinder. Replace the faulty ignition switch, if required.
CHIME SOUNDS WITH DRIVER SIDE FRONT DOOR OPEN	1. Key-in ignition switch sense circuit shorted.	1. Disconnect the instrument panel wire harness C2 connector for the ignition switch and the body wire harness C1 connector for the junction block. There should be no continuity between the key-in ignition switch sense circuit cavity of the instrument panel wire harness C2 connector for the ignition switch and a good ground. Repair the key-in ignition switch sense circuit, if required.

CHIME WARNING SYSTEM (Continued)

CONDITION	POSSIBLE CAUSES	CORRECTION
	2. Faulty ignition switch.	2. Check for continuity between the two terminals in the ignition switch C2 connector receptacle. There should be no continuity with the key removed from the ignition lock cylinder. Replace the faulty ignition switch, if required.
NO CHIMES AT ALL TIMES	1. Faulty Body Control Module (BCM).	1. Use a DRBIII® scan tool and refer to the appropriate diagnostic information. Replace the faulty BCM, if required.

ELECTRONIC CONTROL MODULES

TABLE OF CONTENTS

	page
ELECTRONIC CONTROL MODULES	
STANDARD PROCEDURE	1
PCM/SKIM PROGRAMMING	1
BODY CONTROL/CENTRAL TIMER MODULE	
DESCRIPTION	2
OPERATION	4
DIAGNOSIS AND TESTING	6
BODY CONTROL MODULE	6
REMOVAL	6
INSTALLATION	7
COMMUNICATION	
DESCRIPTION	7
OPERATION	8
CONTROLLER ANTILOCK BRAKE	
DESCRIPTION	9
OPERATION	9
REMOVAL	9
INSTALLATION	9
DATA LINK CONNECTOR	
DESCRIPTION	10
OPERATION	10
DOOR MODULE	
DESCRIPTION	10
OPERATION	11
DIAGNOSIS AND TESTING	12
DOOR MODULE	12
REMOVAL	13
INSTALLATION	13
MEMORY HEATED SEAT/MIRROR MODULE	
DESCRIPTION	14
OPERATION	14
DIAGNOSIS AND TESTING	14
HEATED SEAT MODULE	14
REMOVAL	15
INSTALLATION	15
POWERTRAIN CONTROL MODULE	
DESCRIPTION	15
OPERATION	18
REMOVAL	20
INSTALLATION	21
SENTRY KEY IMMOBILIZER MODULE	
DESCRIPTION	21
OPERATION	21
REMOVAL	22
INSTALLATION	23
TRANSMISSION CONTROL MODULE	
DESCRIPTION	23
OPERATION	23
STANDARD PROCEDURE	26
QUICK LEARN	26

ELECTRONIC CONTROL MODULES

STANDARD PROCEDURE - PCM/SKIM PROGRAMMING

NOTE: Before replacing the PCM for a failed driver, control circuit, or ground circuit, be sure to check the related component/circuit integrity for failures not detected due to a double fault in the circuit. Most PCM driver/control circuit failures are caused by internal component failures (i.e. relays and solenoids) and shorted circuits (i.e. pull-ups, drivers, and switched circuits). These failures are difficult to detect when a double fault has occurred and only one DTC has been set.

When a PCM (JTEC) and the SKIM are replaced at the same time, perform the following steps in order:

(1) Program the new PCM (JTEC).

(2) Program the new SKIM.

(3) Replace all ignition keys and program them to the new SKIM.

PROGRAMMING THE PCM (JTEC)

The SKIS Secret Key is an ID code that is unique to each SKIM. This code is programmed and stored in the SKIM, the PCM, and the ignition key transponder chip(s). When replacing the PCM, it is necessary to program the secret key into the new PCM using the DRB III® scan tool. Perform the following steps to program the secret key into the PCM.

(1) Turn the ignition switch to the On position (transmission in Park/Neutral).

(2) Use the DRB III® and select THEFT ALARM, SKIM, then MISCELLANEOUS.

(3) Select PCM REPLACED (GAS ENGINE).

(4) Enter secured access mode by entering the vehicle four-digit PIN.

(5) Select ENTER to update PCM VIN.

NOTE: If three attempts are made to enter secure access mode using an incorrect PIN, secured access mode will be locked out for one hour. To exit this lockout mode, turn the ignition switch to the ON position for one hour, then enter the correct PIN. (Ensure all accessories are turned off. Also monitor the battery state and connect a battery charger if necessary).

(6) Press ENTER to transfer the secret key (the SKIM will send the secret key to the PCM).

(7) Press Page Back to get to the Select System menu and select ENGINE, MISCELLANEOUS, and SRI MEMORY CHECK.

(8) The DRB III® will ask, "Is odometer reading between XX and XX?" Select the YES or NO button on the DRB III®. If NO is selected, the DRB III® will read, "Enter Odometer Reading (From I.P. odometer)". Enter the odometer reading from the instrument cluster and press ENTER.

PROGRAMMING THE SKIM

(1) Turn the ignition switch to the On position (transmission in Park/Neutral).

(2) Use the DRB III® and select THEFT ALARM, SKIM, then MISCELLANEOUS.

(3) Select PCM REPLACED (GAS ENGINE).

(4) Program the vehicle four-digit PIN into SKIM.

(5) Select COUNTRY CODE and enter the correct country.

NOTE: Be sure to enter the correct country code. If the incorrect country code is programmed into SKIM, it cannot be changed and the SKIM must be replaced.

(6) Select YES to update VIN (the SKIM will learn the VIN from the PCM).

(7) Press ENTER to transfer the secret key (the PCM will send the secret key to the SKIM).

(8) Program ignition keys to the SKIM.

NOTE: If the PCM and the SKIM are replaced at the same time, all vehicle ignition keys will need to be replaced and programmed to the new SKIM.

PROGRAMMING IGNITION KEYS TO THE SKIM

(1) Turn the ignition switch to the On position (transmission in Park/Neutral).

(2) Use the DRB III® and select THEFT ALARM, SKIM, then MISCELLANEOUS.

(3) Select PROGRAM IGNITION KEY'S.

(4) Enter secured access mode by entering the vehicle four-digit PIN.

NOTE: A maximum of eight keys can be learned to each SKIM. Once a key is learned to a SKIM it (the key) cannot be transferred to another vehicle.

(5) Obtain ignition keys to be programmed from the customer (8 keys maximum).

(6) Using the DRB III®, erase all ignition keys by selecting MISCELLANEOUS, and ERASE ALL CURRENT IGN. KEYS.

(7) Program all of the ignition keys.

If ignition key programming is unsuccessful, the DRB III® will display one of the following messages:

- **Programming Not Attempted** - The DRB III® attempts to read the programmed key status and there are no keys programmed into SKIM memory.
- **Programming Key Failed (Possible Used Key From Wrong Vehicle)** - SKIM is unable to program an ignition key transponder due to one of the following:
  - The ignition key transponder is faulty.
  - The ignition key transponder is or has been already programmed to another vehicle.
- **8 Keys Already Learned, Programming Not Done** - The SKIM transponder ID memory is full.
- **Learned Key In Ignition** - The ID for the ignition key transponder currently in the ignition lock cylinder is already programmed in SKIM memory.

BODY CONTROL/CENTRAL TIMER MODULE

DESCRIPTION

A Body Control Module (BCM) is concealed below the driver side end of the instrument panel in the passenger compartment, where it is secured to the dash panel side of the Junction Block (JB) with four screws (Fig. 1). The BCM is enclosed in a molded plastic housing with two integral external connector receptacles that connect it to the vehicle electrical system through two take outs with connectors from the instrument panel wire harness. The BCM also has an integral interface connector concealed on the back side of the unit that joins it through a connector receptacle that is integral to the JB housing to the circuitry within the JB. Two locator channels or ramps molded into the lower edge of the BCM housing are designed to guide the mounting latches of the instrument panel fuse cover to the two mounting slots in the lower forward-facing surface of the BCM housing.

The BCM utilizes integrated circuitry and information carried on the Programmable Communications Interface (PCI) data bus network along with many hard wired inputs to monitor many sensor and switch inputs throughout the vehicle. In response to

BODY CONTROL/CENTRAL TIMER MODULE (Continued)

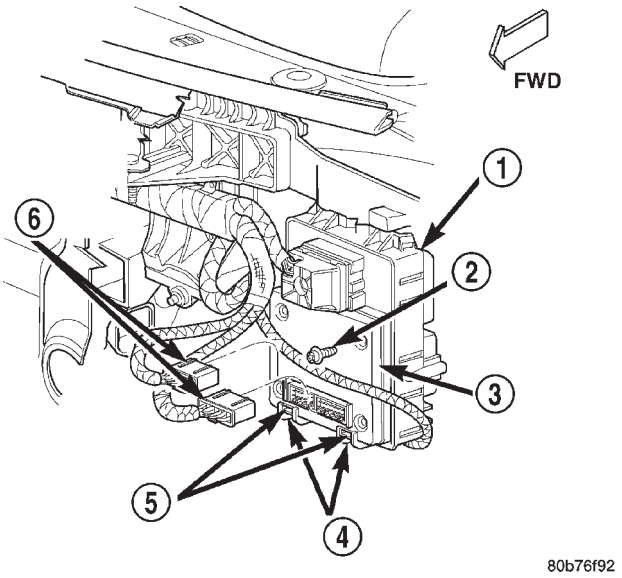

Fig. 1 Body Control Module

1 - JUNCTION BLOCK
2 - SCREWS (4)
3 - BODY CONTROL MODULE
4 - FUSE COVER LOCATOR CHANNELS
5 - FUSE COVER MOUNTING SLOTS
6 - INSTRUMENT PANEL WIRE HARNESS CONNECTORS

those inputs, the internal circuitry and programming of the BCM allow it to control and integrate many electronic functions and features of the vehicle through both hard wired outputs and the transmission of electronic message outputs to other electronic modules in the vehicle over the PCI data bus. The electronic functions and features that the BCM supports or controls include the following:

- **A/C Select Switch Status** - The BCM monitors and transmits the status of the A/C switch on both manual heater-A/C and Automatic Zone Control (AZC) equipped vehicles.
- **Accessory Delay Control** - The BCM provides an accessory delay feature that allows operation of the power windows or power sunroof for a timed interval following ignition Off.
- **Ambient Temperature Data** - The BCM monitors and transmits the ambient temperature sensor input data.
- **Automatic Headlamps** - The BCM monitors an ambient light sensor to provide an automatic headlamps feature for vehicles equipped with this option.
- **Cargo Lamp Disable** - The BCM provides a cargo lamp disable feature.
- **Chimes** - The BCM provides chime service through an integral chime tone generator. This includes a programmable low fuel warning chime.
- **Courtesy Lamps** - The BCM provides courtesy lamp control with a theater-style fade-to-off feature and transmits the status of the system.
- **Customer Programmable Features** - The BCM provides support for the customer programmable features function of the Electronic Vehicle Information Center (EVIC).
- **Exterior Lamp Load Shedding** - The BCM provides a battery saver feature which will automatically turn off exterior lamps that remain on after a timed interval.
- **Exterior Lamp Status** - The BCM monitors the status of the park lamp, head lamp, and fog lamp relays.
- **Exterior Lighting Control** - The BCM provides exterior lamp control for standard head and park lamps, as well as optional automatic headlamps, optional fog lamps, and Daytime Running Lamps (DRL) for vehicles sold in Canada.
- **Fluid Level Status of Washer and Coolant Reservoirs** - The BCM monitors and transmits the status of the washer fluid level switch and the coolant level sensor inputs.
- **Fuel Economy and Distance to Empty Calculations** - The BCM calculates and transmits the fuel economy and Distance To Empty (DTE) data.
- **Gulf Coast Country Overspeed Warning** - The BCM provides an audible overspeed warning feature used for vehicles sold in Middle East Gulf Coast Countries (GCC).
- **Headlamps On With Wipers** - The BCM provides an automatic headlamps on with wipers turned on feature for models with the optional automatic headlamps. This is a programmable feature.
- **Headlamp Time Delay** - The BCM provides a headlamp time delay feature with programmable delay intervals.
- **Heated Rear Glass Control** - The BCM provides control and timer functions for the heated rear glass feature and transmits the system status.
- **Heated Seat Switch Status** - The BCM monitors and transmits the status of both the driver and passenger heated seat switches.
- **Ignition On/Off Timer** - The BCM monitors and transmits the elapsed ignition On timer data and monitors the ignition Off time.
- **Ignition Switch Position Status** - The BCM monitors and transmits the status of the ignition switch.
- **Illuminated Entry** - The BCM provides a timed illuminated entry feature and transmits the system status.
- **Instrument Panel Dimming** - The BCM controls the illumination intensity of all instrument panel lighting.
- **Intermittent Wipe and Low Speed Wiper Control** - The BCM provides low speed front wiper system control with intermittent wipe, mist, and wipe-after-wash features.

BODY CONTROL/CENTRAL TIMER MODULE (Continued)

- **Key-In-Ignition Switch Status** - The BCM monitors and transmits the status of the key-in-ignition switch (ignition switch).
- **Panic Mode** - The BCM provides support for the RKE system panic mode feature.
- **Parade Mode** - The BCM provides a parade mode (also known as funeral mode) that allows the interior Vacuum Fluorescent Displays (VFD) to be illuminated at full intensity while driving in daylight with the exterior lamps On.
- **Reading Lamp/Glove Box Lamp Load Shedding**- The BCM provides a battery saver feature that will automatically turn off reading lamps or a glove box lamp that remain on after a timed interval.
- **Rear Door and Liftgate Ajar Status** - The BCM monitors and transmits the status of the rear door, liftgate, and liftgate flip-up glass ajar switches.
- **Rear Fog Lamp Control** - The BCM provides control for the optional rear fog lamps used for vehicles sold in some markets.
- **Remote Radio Switch Interface** - The BCM monitors and transmits the status of the optional remote radio switches.
- **Seat Belt Switch Status** - The BCM monitors and transmits the status of the driver side front seat belt switch.
- **Speed Sensitive Intermittent Wipe Control** - The BCM provides the speed sensitive intermittent wipe feature.
- **Vacuum Fluorescent Display Synchronization** - The BCM transmits panel lamp intensity data which allows Vacuum Fluorescent Display (VFD) modules to coordinate their lighting intensity.
- **Vehicle Theft Alarm** - The BCM provides control of the optional Vehicle Theft Alarm features.
- **Wiper System Status** - The BCM monitors the front wiper motor park switch status.

Hard wired circuitry connects the BCM to the electrical system of the vehicle. These hard wired circuits are integral to several wire harnesses, which are routed throughout the vehicle and retained by many different methods. These circuits may be connected to each other, to the vehicle electrical system and to the BCM through the use of a combination of soldered splices, splice block connectors, and many different types of wire harness terminal connectors and insulators. Refer to the appropriate wiring information. The wiring information includes wiring diagrams, proper wire and connector repair procedures, further details on wire harness routing and retention, as well as pin-out and location views for the various wire harness connectors, splices and grounds.

The BCM for this model is serviced only as a complete unit. Many of the electronic features in the vehicle controlled or supported by the BCM are programmable using either the Electronic Vehicle Information Center (EVIC) user interface, or the DRBIII® scan tool. In addition, the BCM software is Flash compatible, which means it can be reprogrammed using Flash reprogramming procedures. However, if any of the BCM hardware components is damaged or faulty, the entire BCM unit must be replaced. A BCM can only be repaired by or replaced through an authorized electronic warranty repair station. Refer to the latest version of the Warranty Policies and Procedures manual for a current listing of authorized electronic repair stations.

OPERATION

The Body Control Module (BCM) is designed to control and integrate many of the electronic features and functions of the vehicle. The microprocessor-based BCM hardware and software monitors many hard wired switch and sensor inputs as well as those resources it shares with other electronic modules in the vehicle through its communication over the PCI data bus network. The internal programming and all of these inputs allow the BCM microprocessor to determine the tasks it needs to perform and their priorities, as well as both the standard and optional features that it should provide. The BCM programming then performs those tasks and provides those features through both PCI data bus communication with other electronic modules and through hard wired low current outputs to a number of relays. These relays provide the BCM with the ability to control numerous high current accessory systems in the vehicle.

The BCM circuitry operates on battery current received through fuses in the Junction Block (JB) on a non-switched fused B(+) circuit, a fused ignition switch output (start-run) circuit, and a fused ignition switch output (run-accessory) circuit. This arrangement allows the BCM to provide some features regardless of the ignition switch position, while other features will operate only with the ignition switch in the Accessory, On, and/or Start positions. The BCM circuitry is grounded through five separate ground circuits, three located in the BCM C1 connector and take out of the instrument panel wire harness, and two located in the JB C3 connector and take out of the instrument panel wire harness. These ground circuits receive ground through a single wire take out with an eyelet terminal connector of the instrument panel wire harness that is secured by a nut to a ground stud located on the floor panel transmission tunnel beneath the center floor console, just forward of the Airbag Control Module (ACM).

The BCM monitors its own internal circuitry as well as many of its input and output circuits, and will store a Diagnostic Trouble Code (DTC) in electronic memory for any failure it detects. These DTCs

BODY CONTROL/CENTRAL TIMER MODULE (Continued)

can be retrieved and diagnosed using a DRBIII® scan tool. Refer to the appropriate diagnostic information.

HARD WIRED INPUTS

The hard wired inputs to the BCM include the following:

- A/C switch signal
- Ambient temperature sensor signal
- Body control module flash enable
- Coolant level switch sense
- Door ajar switch sense (two circuits - one left rear, and one right rear)
- Driver seat heater switch mux
- Fog lamp switch sense
- Fused B(+)
- Fused ignition switch output (run-acc)
- Fused ignition switch output (st-run)
- Ground (five circuits - two Z1, and three Z2)
- Hazard switch sense
- Headlamp switch mux
- High beam switch sense
- Hood ajar switch sense (export)
- Key-in ignition switch sense
- Liftgate ajar switch sense
- Liftgate courtesy disable
- Liftgate flip-up ajar switch sense
- Panel lamps dimmer signal
- Park lamp relay output
- Passenger seat heater switch mux
- PCI bus
- Radio control mux
- Rear window defogger switch sense
- Seat belt switch sense
- Ultralight sensor signal
- Washer fluid switch sense
- Washer pump switch sense
- Windshield wiper switch mux
- Wiper park switch sense

HARD WIRED OUTPUTS

The hard wired outputs of the BCM include the following:

- Ambient temperature sensor return
- Courtesy lamp driver (three circuits - two M2, and one M20)
- Courtesy lamp load shed
- Fog lamp relay control
- Headlamp switch return
- High beam relay control
- Horn relay control
- Low beam relay control
- Panel lamps driver (five circuits)
- Park lamp relay control
- Park lamp relay output
- PCI bus
- Radio control mux return
- Rear window defogger relay control
- Seat heater switch sensor ground
- Sunroof delay relay control
- VTSS indicator driver
- Ultralight sensor return
- Windshield wiper switch return
- Wiper on/off relay control

MESSAGING

The BCM uses the following messages received from other electronic modules over the PCI data bus:

- Accessory Delay Control (DDM/PDM)
- Battery Temperature (PCM)
- Chime Request (EMIC, EVIC, SKIM)
- Cylinder Lock Switch Status (DDM)
- Door Ajar Status/Front Doors (DDM/PDM)
- Door Lock Status (DDM/PDM)
- Engine Model (PCM)
- Engine RPM (PCM)
- Engine Temperature (PCM)
- English/Metric Default (EMIC)
- Fuel Tank Level (PCM)
- Fuel Used/Injector Pulses (PCM)
- Panic Control (PDM)
- Programmable Features Preferences/Audible & Optical Chirps/Headlamp Delay (EVIC)
- RKE Status (PDM)
- Vehicle Identification Number (PCM)
- Vehicle Speed (PCM)

The BCM provides the following messages to other electronic modules over the PCI data bus:

- A/C Switch Status (PCM)
- Ambient Temperature Data (AZC/EVIC/PCM)
- Average/Instantaneous Fuel Economy (EVIC)
- Country Code (EMIC)
- Courtesy Lamp Status (DDM/PDM)
- Distance To Empty (EVIC)
- Elapsed Ignition On Timer (EVIC)
- English/Metric Status (EMIC)
- Front & Rear Door Ajar Status (EVIC)
- Front & Rear Fog Lamp Status (EMIC)
- Heated Seat Switch Status (HSM/MHSM)
- High Beam Status (EMIC)
- Ignition Off Timer (EVIC)
- Ignition Switch Position (DDM/PDM)
- Key-In Ignition Status (DDM/PDM)
- Low Beam Status (EMIC)
- Panel Lamp Status (AZC/EMIC/Radio)
- Rear Window Defogger Relay Status (DDM/PDM)
- Remote Radio Switch Status (Radio)
- Seatbelt Status (EMIC/MHSM/MSM)

BODY CONTROL/CENTRAL TIMER MODULE (Continued)

DIAGNOSIS AND TESTING - BODY CONTROL MODULE

The hard wired inputs to and outputs from the Body Control Module (BCM) may be diagnosed and tested using conventional diagnostic tools and procedures. Refer to the appropriate wiring information. The wiring information includes wiring diagrams, proper wire and connector repair procedures, further details on wire harness routing and retention, as well as pin-out and location views for the various wire harness connectors, splices and grounds.

However, conventional diagnostic methods may not prove conclusive in the diagnosis of the BCM. In order to obtain conclusive testing of the BCM, the Programmable Communications Interface (PCI) data bus network and all of the electronic modules that provide inputs to or receive outputs from the BCM must also be checked. The most reliable, efficient, and accurate means to diagnose the BCM, the PCI data bus network, and the electronic modules that provide inputs to or receive outputs from the BCM requires the use of a DRBIII® scan tool and the appropriate diagnostic information. The DRBIII® scan tool can provide confirmation that the PCI data bus network is functional, that all of the electronic modules are sending and receiving the proper messages over the PCI data bus, and that the BCM is receiving the proper hard wired inputs and responding with the proper hard wired outputs needed to perform its many functions.

WARNING: ON VEHICLES EQUIPPED WITH AIRBAGS, DISABLE THE AIRBAG SYSTEM BEFORE ATTEMPTING ANY STEERING WHEEL, STEERING COLUMN, OR INSTRUMENT PANEL COMPONENT DIAGNOSIS OR SERVICE. DISCONNECT AND ISOLATE THE BATTERY NEGATIVE (GROUND) CABLE, THEN WAIT TWO MINUTES FOR THE AIRBAG SYSTEM CAPACITOR TO DISCHARGE BEFORE PERFORMING FURTHER DIAGNOSIS OR SERVICE. THIS IS THE ONLY SURE WAY TO DISABLE THE AIRBAG SYSTEM. FAILURE TO TAKE THE PROPER PRECAUTIONS COULD RESULT IN ACCIDENTAL AIRBAG DEPLOYMENT AND POSSIBLE PERSONAL INJURY.

REMOVAL

WARNING: ON VEHICLES EQUIPPED WITH AIRBAGS, DISABLE THE AIRBAG SYSTEM BEFORE ATTEMPTING ANY STEERING WHEEL, STEERING COLUMN, OR INSTRUMENT PANEL COMPONENT DIAGNOSIS OR SERVICE. DISCONNECT AND ISOLATE THE BATTERY NEGATIVE (GROUND) CABLE, THEN WAIT TWO MINUTES FOR THE AIRBAG SYSTEM CAPACITOR TO DISCHARGE BEFORE PERFORMING FURTHER DIAGNOSIS OR SERVICE. THIS IS THE ONLY SURE WAY TO DISABLE THE AIRBAG SYSTEM. FAILURE TO TAKE THE PROPER PRECAUTIONS COULD RESULT IN ACCIDENTAL AIRBAG DEPLOYMENT AND POSSIBLE PERSONAL INJURY.

(1) Disconnect and isolate the battery negative cable.

(2) Remove the instrument panel fuse cover from the bottom of the Junction Block (JB) and Body Control Module (BCM) unit. (Refer to 8 - ELECTRICAL/ POWER DISTRIBUTION/FUSE COVER - REMOVAL).

(3) Reach under the instrument panel and behind the JB to access and disconnect the two instrument panel wire harness connectors for the BCM from the BCM connector receptacles (Fig. 2).

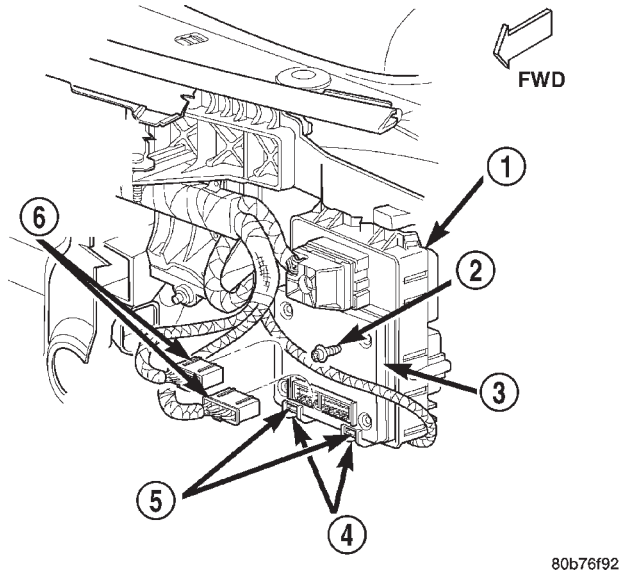

Fig. 2 Body Control Module Remove/Install

1 - JUNCTION BLOCK
2 - SCREWS (4)
3 - BODY CONTROL MODULE
4 - FUSE COVER LOCATOR CHANNELS
5 - FUSE COVER MOUNTING SLOTS
6 - INSTRUMENT PANEL WIRE HARNESS CONNECTORS

(4) Remove the four screws (Torx T-20) that secure the BCM to the JB.

(5) Pull the BCM straight out to wards the dash panel far enough to disconnect the integral BCM to JB connector.

(6) Remove the BCM from under the instrument panel.

BODY CONTROL/CENTRAL TIMER MODULE (Continued)

INSTALLATION

WARNING: ON VEHICLES EQUIPPED WITH AIRBAGS, DISABLE THE AIRBAG SYSTEM BEFORE ATTEMPTING ANY STEERING WHEEL, STEERING COLUMN, OR INSTRUMENT PANEL COMPONENT DIAGNOSIS OR SERVICE. DISCONNECT AND ISOLATE THE BATTERY NEGATIVE (GROUND) CABLE, THEN WAIT TWO MINUTES FOR THE AIRBAG SYSTEM CAPACITOR TO DISCHARGE BEFORE PERFORMING FURTHER DIAGNOSIS OR SERVICE. THIS IS THE ONLY SURE WAY TO DISABLE THE AIRBAG SYSTEM. FAILURE TO TAKE THE PROPER PRECAUTIONS COULD RESULT IN ACCIDENTAL AIRBAG DEPLOYMENT AND POSSIBLE PERSONAL INJURY.

(1) Position the Body Control Module (BCM) to its mounting location on the Junction Block (JB) (Fig. 3).

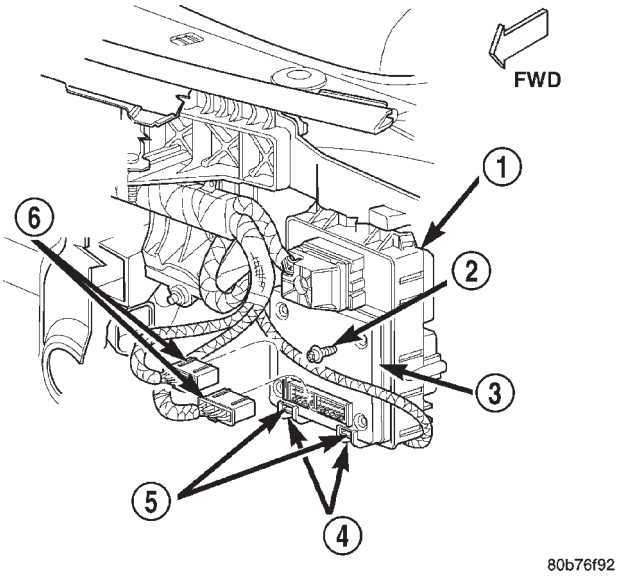

Fig. 3 Body Control Module Remove/Install

1 - JUNCTION BLOCK
2 - SCREWS (4)
3 - BODY CONTROL MODULE
4 - FUSE COVER LOCATOR CHANNELS
5 - FUSE COVER MOUNTING SLOTS
6 - INSTRUMENT PANEL WIRE HARNESS CONNECTORS

(2) Align the terminal pins of the BCM integral connector with the connector receptacle on the JB.

(3) Firmly and evenly squeeze the BCM and the JB together until the integral connector is fully engaged.

(4) Install and tighten the four screws that secure the BCM to the JB. Tighten the screws to 2.2 N·m (20 in. lbs.).

(5) Reconnect the two instrument panel wire harness connectors for the BCM to the BCM connector receptacles.

(6) Reinstall the instrument panel fuse cover to the bottom of the BCM and JB unit. (Refer to 8 - ELECTRICAL/POWER DISTRIBUTION/FUSE COVER - INSTALLATION).

(7) Reconnect the battery negative cable.

COMMUNICATION

DESCRIPTION

The DaimlerChrysler Programmable Communication Interface (PCI) data bus system is a single wire multiplex system used for vehicle communications on many DaimlerChrysler Corporation vehicles. Multiplexing is a system that enables the transmission of several messages over a single channel or circuit. All DaimlerChrysler vehicles use this principle for communication between various microprocessor-based electronic control modules. The PCI data bus exceeds the Society of Automotive Engineers (SAE) J1850 Standard for Class B Multiplexing.

Many of the electronic control modules in a vehicle require information from the same sensing device. In the past, if information from one sensing device was required by several controllers, a wire from each controller needed to be connected in parallel to that sensor. In addition, each controller utilizing analog sensors required an Analog/Digital (A/D) converter in order to ″read″ these sensor inputs. Multiplexing reduces wire harness complexity, sensor current loads and controller hardware because each sensing device is connected to only one controller, which reads and distributes the sensor information to the other controllers over the data bus. Also, because each controller on the data bus can access the controller sensor inputs to every other controller on the data bus, more function and feature capabilities are possible.

In addition to reducing wire harness complexity, component sensor current loads and controller hardware, multiplexing offers a diagnostic advantage. A multiplex system allows the information flowing between controllers to be monitored using a diagnostic scan tool. The DaimlerChrysler system allows an electronic control module to broadcast message data out onto the bus where all other electronic control modules can ″hear″ the messages that are being sent. When a module hears a message on the data bus that it requires, it relays that message to its microprocessor. Each module ignores the messages on the data bus that are being sent to other electronic control modules.

COMMUNICATION (Continued)

OPERATION

Data exchange between modules is achieved by serial transmission of encoded data over a single wire broadcast network. The wire colors used for the PCI data bus circuits are yellow with a violet tracer, or violet with a yellow tracer, depending upon the application. The PCI data bus messages are carried over the bus in the form of Variable Pulse Width Modulated (VPWM) signals. The PCI data bus speed is an average 10.4 Kilo-bits per second (Kbps). By comparison, the prior two-wire Chrysler Collision Detection (CCD) data bus system is designed to run at 7.8125 Kbps.

The voltage network used to transmit messages requires biasing and termination. Each module on the PCI data bus system provides its own biasing and termination. Each module (also referred to as a node) terminates the bus through a terminating resistor and a terminating capacitor. There are two types of nodes on the bus. The dominant node terminates the bus through a 1 KW resistor and a 3300 pF capacitor. The Powertrain Control Module (PCM) is the only dominant node for the PCI data bus system. A standard node terminates the bus through an 11 KW resistor and a 330 pF capacitor.

The modules bias the bus when transmitting a message. The PCI bus uses low and high voltage levels to generate signals. Low voltage is around zero volts and the high voltage is about seven and one-half volts. The low and high voltage levels are generated by means of variable-pulse width modulation to form signals of varying length. The Variable Pulse Width Modulation (VPWM) used in PCI bus messaging is a method in which both the state of the bus and the width of the pulse are used to encode bit information. A ″zero″ bit is defined as a short low pulse or a long high pulse. A ″one″ bit is defined as a long low pulse or a short high pulse. A low (passive) state on the bus does not necessarily mean a zero bit. It also depends upon pulse width. If the width is short, it stands for a zero bit. If the width is long, it stands for a one bit. Similarly, a high (active) state does not necessarily mean a one bit. This too depends upon pulse width. If the width is short, it stands for a one bit. If the width is long, it stands for a zero bit.

In the case where there are successive zero or one data bits, both the state of the bus and the width of the pulse are changed alternately. This encoding scheme is used for two reasons. First, this ensures that only one symbol per transition and one transition per symbol exists. On each transition, every transmitting module must decode the symbol on the bus and begin timing of the next symbol. Since timing of the next symbol begins with the last transition detected on the bus, all of the modules are re-synchronized with each symbol. This ensures that there are no accumulated timing errors during PCI data bus communication.

The second reason for this encoding scheme is to guarantee that the zero bit is the dominant bit on the bus. When two modules are transmitting simultaneously on the bus, there must be some form of arbitration to determine which module will gain control. A data collision occurs when two modules are transmitting different messages at the same time. When a module is transmitting on the bus, it is reading the bus at the same time to ensure message integrity. When a collision is detected, the module that transmitted the one bit stops sending messages over the bus until the bus becomes idle.

Each module is capable of transmitting and receiving data simultaneously. The typical PCI bus message has the following four components:

- **Message Header** - One to three bytes in length. The header contains information identifying the message type and length, message priority, target module(s) and sending module.
- **Data Byte(s)** - This is the actual message that is being sent.
- **Cyclic Redundancy Check (CRC) Byte** - This byte is used to detect errors during a message transmission.
- **In-Frame Response (IFR) byte(s)** - If a response is required from the target module(s), it can be sent during this frame. This function is described in greater detail in the following paragraph.

The IFR consists of one or more bytes, which are transmitted during a message. If the sending module requires information to be received immediately, the target module(s) can send data over the bus during the original message. This allows the sending module to receive time-critical information without having to wait for the target module to access the bus. After the IFR is received, the sending module broadcasts an End of Frame (EOF) message and releases control of the bus.

The PCI data bus can be monitored using the DRBIII® scan tool. It is possible, however, for the bus to pass all DRBIII® tests and still be faulty if the voltage parameters are all within the specified range and false messages are being sent.

CONTROLLER ANTILOCK BRAKE

DESCRIPTION

The CAB is mounted to the HCU and operates the ABS system (Fig. 4) separate from other vehicle electrical circuits.

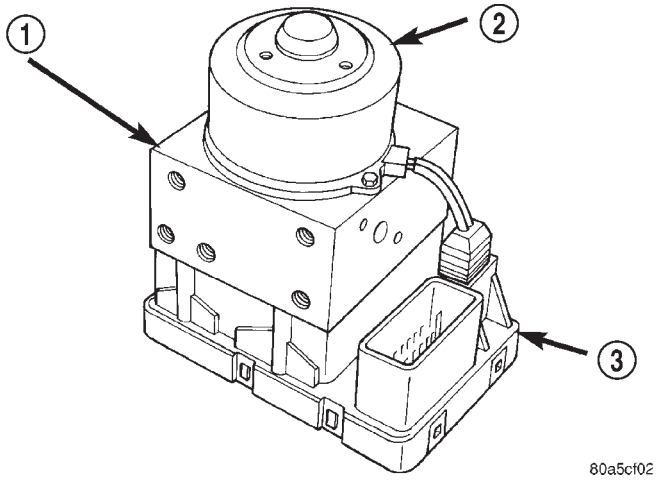

Fig. 4 Controller Antilock Brakes

1 - HCU
2 - MOTOR
3 - CAB

OPERATION

The CAB voltage source is through the ignition switch in the RUN position. The CAB contains dual microprocessors. A logic block in each microprocessor receives identical sensor signals. These signals are processed and compared simultaneously. The CAB contains a self check program that illuminates the ABS warning light when a system fault is detected. Faults are stored in a diagnostic program memory and are accessible with the DRB scan tool. ABS faults remain in memory until cleared, or until after the vehicle is started approximately 50 times. Stored faults are **not** erased if the battery is disconnected. (Fig. 4)

REMOVAL

(1) Remove negative battery cable from the battery.

(2) Remove air cleaner housing,(Refer to 9 - ENGINE/AIR INTAKE SYSTEM/AIR CLEANER HOUSING - REMOVAL) OR (Refer to 9 - ENGINE/AIR INTAKE SYSTEM/AIR CLEANER HOUSING - REMOVAL) .

(3) Pull CAB harness connector release up and remove connector (Fig. 5).

(4) Remove pump motor connector.

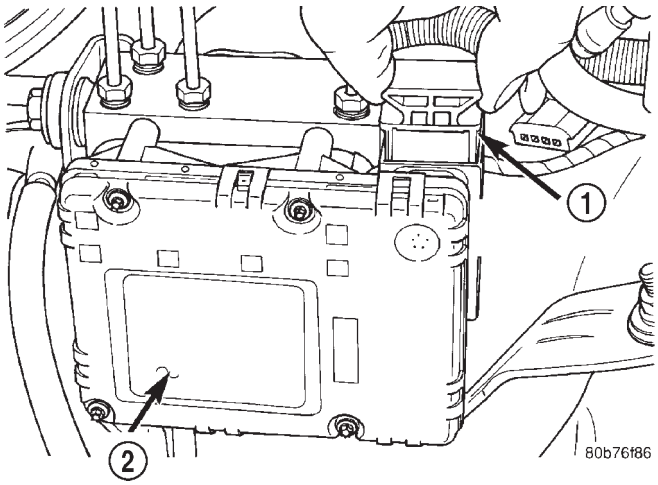

Fig. 5 CAB Connector Release

1 - CONNECTOR RELEASE
2 - CAB

(5) Remove CAB mounting bolts (Fig. 6) and remove the CAB from the HCU.

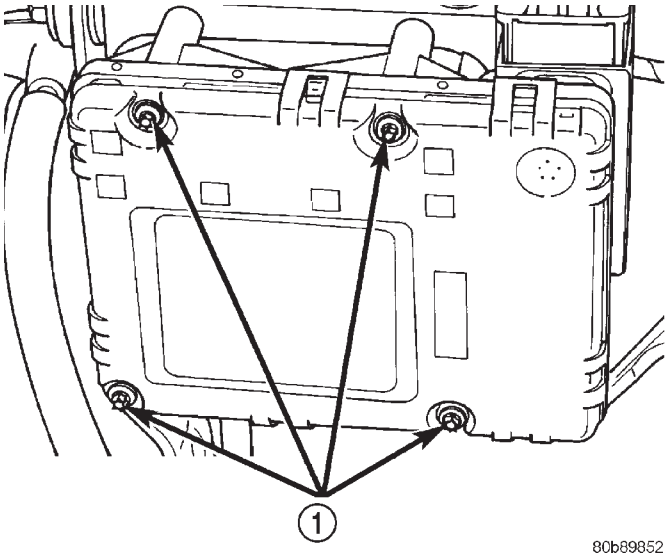

Fig. 6 CAB Mounting Bolts

1 - MOUNTING BOLTS

INSTALLATION

(1) Install the CAB onto the HCU and tighten mounting bolts to 1.8 N·m (16 in. lbs.).

(2) Install pump motor connector.

(3) Install CAB harness connector and push down connector release.

(4) Install air cleaner housing,(Refer to 9 - ENGINE/AIR INTAKE SYSTEM/AIR CLEANER HOUSING - INSTALLATION) OR (Refer to 9 - ENGINE/AIR INTAKE SYSTEM/AIR CLEANER HOUSING - INSTALLATION).

(5) Install negative battery cable to the battery.

DATA LINK CONNECTOR

DESCRIPTION - DATA LINK CONNECTOR

The data link connector is located at the lower edge of the instrument panel near the steering column.

OPERATION - DATA LINK CONNECTOR

The 16–way data link connector (diagnostic scan tool connector) links the Diagnostic Readout Box (DRB) scan tool or the Mopar Diagnostic System (MDS) with the Powertrain Control Module (PCM).

DOOR MODULE

DESCRIPTION

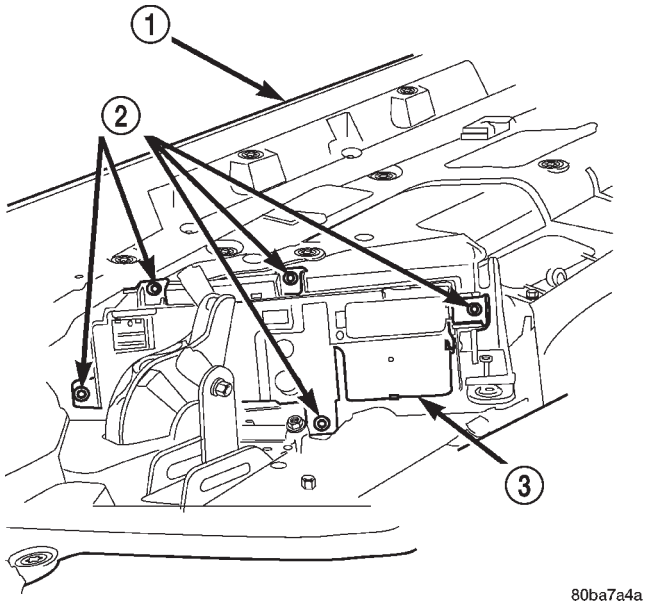

Fig. 7 Door Module

1 - FRONT DOOR TRIM PANEL
2 - SCREW (5)
3 - DOOR MODULE

A door module is concealed behind the trim panel of each front door (Fig. 7). The only visible components of the door modules are the integral power window and power lock switches. The switches and their respective switch bezels are located forward of the door pull cup found in the arm rest of each front door trim panel. The module on the driver side is referred to as the Driver Door Module (DDM), while the module on the passenger side is the Passenger Door Module (PDM). Each door module houses both the front power lock and power window switches. In addition to the power window and power lock switches for its own door, the DDM also houses individual switches for each passenger door power window, a power window lockout switch, the power mirror switch, and the optional power foldaway mirror switch used in vehicles sold in some markets. Each door module is secured to the back of the trim panel with five screws. The circuitry of each door module is enclosed within a molded plastic housing with two integral external connector receptacles that connect the modules to the vehicle electrical system through two take outs with connectors from the door wire harnesses. The DDM has a third connector receptacle that accepts the pigtail wire connector of the memory switch on models equipped with the optional memory system.

The DDM and PDM each utilize integrated circuitry and information carried on the Programmable Communications Interface (PCI) data bus network along with many hard wired inputs to monitor many sensor and switch inputs throughout the vehicle. The PDM also receives inputs through an integral Radio Frequency (RF) Remote Keyless Entry (RKE) receiver. In response to all of those inputs, the internal circuitry and programming of the DDM and PDM allow them to control and integrate many electronic functions and features of the vehicle through both hard wired outputs and the transmission of electronic message outputs to other electronic modules in the vehicle over the PCI data bus. The electronic functions and features that the door modules support or control include the following:

- **Automatic Door Lock** - The two door modules work in concert to provide an automatic door lock feature (also known as rolling door locks) which locks the doors when the vehicle is moving. This is a programmable feature.
- **Automatic Door Unlock On Exit** - The two door modules work in concert to provide an automatic door unlock on exit feature which will unlock all the doors if they were locked via the automatic door lock feature after the vehicle has stopped moving and the driver door is opened. This is a programmable feature.
- **Customer Programmable Features** - Each door module provides support for certain customer programmable features.
- **Cylinder Lock Switch Status** - The DDM monitors and transmits the status of the cylinder lock switch on the driver side front door lock cylinder.
- **Door Courtesy Lamp Control** - Each door module provides control of its own optional front door-mounted courtesy lamp.
- **Door Lock Inhibit** - Each door module provides a door lock inhibit feature which prevents the doors from being locked with a power lock switch if

DOOR MODULE (Continued)

the key was left in the ignition and a front door is open.

- **Express-Down Window** - The DDM provides an express-down feature (also known as auto-down or one-touch down) for the driver side front door window only.
- **Extended Window Operation** - Both door modules provide an extended power window operation feature that allows operation of the power windows for a timed interval following ignition Off.
- **Front Door Ajar Switch Status** - Each door module monitors and transmits the status of its own front door ajar switch.
- **Heated Mirrors** - Each door module provides support and control for its own optional heated outside rear view mirror.
- **Illuminated Entry** - Each door module supports an illuminated entry feature through its own optional front door-mounted courtesy lamp.
- **Memory Mirrors** - Each door module provides support and control for its own optional memory outside rear view mirror.
- **Memory Switch** - The DDM monitors the status of the optional memory switch and controls the illumination of the memory switch Light Emitting Diode (LED) indicator and illumination lamps.
- **Memory System** - The DDM transmits memory set and recall messages based upon inputs from the memory switch. If the optional RKE linked to memory feature is enabled, the DDM will also transmit memory recall messages based upon memory requests received from the Remote Keyless Entry (RKE) system in the PDM. Certain memory system features are programmable.
- **Power Foldaway Mirrors** - Each door module provides support for the optional power foldaway outside mirrors used for vehicles sold in some markets. The DDM also houses the control switch for this system.
- **Power Lock Control** - The DDM provides control for the driver side front door power lock motor, while the PDM provides control for the power lock motors of the three remaining doors and the liftgate.
- **Power Lock Switch Status** - Each door module monitors and transmits the status of its own integral power lock switch.
- **Power Window Control** - Each door module provides control for both the front and rear door power window motors and the rear door power window switches on the same side of the vehicle.
- **Power Window Switch Status** - The DDM monitors and transmits the status of its integral passenger side front and rear power window switches.
- **Remote Keyless Entry** - The PDM monitors and transmits the status of the Remote Keyless Entry (RKE) system and provides support for the RKE Lock (with the optional horn chirp and park lamp flash features), Unlock (with the optional RKE unlock sequence feature of one press driver door/two press all doors, or one press all doors, and the optional RKE unlock link to memory recall request feature), and Panic Mode functions. The optional RKE features are programmable.
- **Switch Illumination** - Each door module provides control of the power window and power lock switch illumination for the front and rear doors on the same side of the vehicle. The DDM provides control of the power mirror switch and window lockout switch illumination.
- **Window Lockout** - The DDM monitors and transmits the status of its integral window lockout switch to provide the power window lockout feature and coordinate power window switch knob illumination.

Hard wired circuitry connects the door modules to the electrical system of the vehicle. These hard wired circuits are integral to several wire harnesses, which are routed throughout the vehicle and retained by many different methods. These circuits may be connected to each other, to the vehicle electrical system and to the BCM through the use of a combination of soldered splices, splice block connectors, and many different types of wire harness terminal connectors and insulators. Refer to the appropriate wiring information. The wiring information includes wiring diagrams, proper wire and connector repair procedures, further details on wire harness routing and retention, as well as pin-out and location views for the various wire harness connectors, splices and grounds.

The door modules are serviced only as complete units. Many of the electronic features in the vehicle controlled or supported by the door modules are programmable using either the Electronic Vehicle Information Center (EVIC) user interface, or the DRBIII® scan tool. If a door module is damaged or faulty, the entire door module unit must be replaced.

OPERATION

The Driver Door Module (DDM) and Passenger Door Module (PDM) are designed to control and integrate many of the electronic features and functions of the vehicle. The microprocessor-based DDM and PDM hardware and software monitors integral and hard wired external switch inputs as well as those resources it shares with other electronic modules in the vehicle through its communication over the PCI data bus network. The internal programming and all of these inputs allow the DDM or PDM microprocessor to determine the tasks it needs to perform and their priorities, as well as both the standard and optional features that it should provide. The DDM or PDM programming then performs those tasks and

DOOR MODULE (Continued)

provides those features through both PCI data bus communication with other electronic modules and through hard wired outputs.

The DDM and PDM circuitry operates on battery current received through a fuse in the Power Distribution Center (PDC) on a non-switched fused B(+) circuit so that these modules can operate regardless of the ignition switch position. The DDM and PDM circuitry is grounded through a single wire take out with an eyelet terminal connector of the body wire harness that is secured under a ground screw located on the back of the front seat crossmember beneath the right front seat.

The DDM and PDM can be diagnosed using a DRBIII® scan tool. Refer to the appropriate diagnostic information.

HARD WIRED INPUTS

The hard wired inputs to the door modules include the following:

- Door ajar switch sense
- Driver door key cylinder switch sense (DDM)
- Fused B(+)
- Ground
- Memory switch mux (DDM)
- Mirror horizontal position signal
- Mirror vertical position signal
- PCI bus

HARD WIRED OUTPUTS

The hard wired outputs of the door modules include the following:

- Courtesy lamp driver
- Courtesy lamp ground
- Diagnostic out (DDM)
- Door/liftgate lock driver
- Door/liftgate unlock driver
- Door switch illumination (rear power window)
- Front window driver (down)
- Front window driver (up)
- Memory set indicator driver (DDM)
- Memory switch return (DDM)
- Mirror common driver
- Mirror heater ground
- Mirror heater 12V supply
- Rear window driver (down)
- Rear window driver (up)
- Mirror horizontal driver
- Mirror sensor ground
- Mirror vertical driver
- PCI bus
- Switch illumination driver (memory - DDM)

MESSAGING

The door modules use the following messages received from other electronic modules over the PCI data bus:

- Accessory Delay Control (BCM)
- Courtesy Lamp Status (BCM)
- Door Ajar Status/Rear Doors (BCM)
- Door Lock Status (DDM/PDM)
- Ignition Switch Position (BCM)
- Key-In Ignition Status (BCM)
- Programmable Features Preferences/Auto Lock/Auto Unlock/RKE Unlock Sequence/RKE Link to Memory (EVIC)
- Memory Recall (DDM)
- Rear Window Defogger Relay Status (BCM)
- Vehicle Speed (PCM)

The door modules provide the following messages to other electronic modules over the PCI data bus:

- Cylinder Lock Switch Status (BCM)
- Door Ajar Status/Front Doors (BCM/DDM/PDM)
- Door Lock Status (DDM/PDM)
- Memory Recall (PDM/MHSM/MSM/Radio)
- Memory Set Switch Status (PDM/MHSM/MSM/Radio)
- Panic Control (BCM)
- Power Window Switch Status (PDM)
- RKE Status (BCM/DDM)
- Window Lockout Switch Status (PDM)

DIAGNOSIS AND TESTING - DOOR MODULE

WARNING: ON VEHICLES EQUIPPED WITH AIRBAGS, DISABLE THE AIRBAG SYSTEM BEFORE ATTEMPTING ANY STEERING WHEEL, STEERING COLUMN, OR INSTRUMENT PANEL COMPONENT DIAGNOSIS OR SERVICE. DISCONNECT AND ISOLATE THE BATTERY NEGATIVE (GROUND) CABLE, THEN WAIT TWO MINUTES FOR THE AIRBAG SYSTEM CAPACITOR TO DISCHARGE BEFORE PERFORMING FURTHER DIAGNOSIS OR SERVICE. THIS IS THE ONLY SURE WAY TO DISABLE THE AIRBAG SYSTEM. FAILURE TO TAKE THE PROPER PRECAUTIONS COULD RESULT IN ACCIDENTAL AIRBAG DEPLOYMENT AND POSSIBLE PERSONAL INJURY.

The hard wired inputs to and outputs from the Driver Door Module (DDM) or the Passenger Door Module (PDM) may be diagnosed and tested using conventional diagnostic tools and procedures. It is suggested that the proper operation of the inoperative power window motor, power door lock motor, power liftgate lock motor, power mirror motors, or heated mirror grid be confirmed using jumper wires to bypass the door module. Remember, the DDM circuitry controls the output to the driver side front door power lock motor, the PDM circuitry controls the output to the power lock motors for the remaining doors and the liftgate, and both door modules control the output to each of the power windows and mirrors on its own side of the vehicle. If the inoper-

DOOR MODULE (Continued)

ative component operates when the door module is bypassed, check the circuits between the component and the door module, as well as the fused B(+) and ground circuits of the door module for shorts or opens. If the inoperative component and each of these circuits check OK, replace the door module with a known good unit. Refer to the appropriate wiring information. The wiring information includes wiring diagrams, proper wire and connector repair procedures, further details on wire harness routing and retention, as well as pin-out and location views for the various wire harness connectors, splices and grounds.

These conventional diagnostic methods may not prove conclusive in the diagnosis of the DDM or the PDM. In order to obtain conclusive testing of these modules, the Programmable Communications Interface (PCI) data bus network and all of the electronic modules that provide inputs to or receive outputs from the door modules must also be checked. The most reliable, efficient, and accurate means to diagnose the DDM, the PDM, the PCI data bus network, and the electronic modules that provide inputs to or receive outputs from the door modules requires the use of a DRBIII® scan tool and the appropriate diagnostic information. The DRBIII® scan tool can provide confirmation that the PCI data bus network is functional, that all of the electronic modules are sending and receiving the proper messages over the PCI data bus, and that the DDM or PDM is receiving the proper hard wired inputs and responding with the proper hard wired outputs needed to perform its many functions.

REMOVAL

(1) Disconnect and isolate the battery negative cable.

(2) Remove the trim panel from the front door. (Refer to 23 - BODY/DOOR - FRONT/TRIM PANEL - REMOVAL).

(3) Remove the five screws that secure the door module to the back of the front door trim panel (Fig. 8).

(4) Remove the door module from the front door trim panel.

INSTALLATION

(1) Position the door module onto the front door trim panel.

(2) Install and tighten the five screws that secure the door module to the back of the front door trim panel (Fig. 9). Tighten the screws to 2.2 N·m (20 in. lbs.).

(3) Reinstall the trim panel onto the front door. (Refer to 23 - BODY/DOOR - FRONT/TRIM PANEL - INSTALLATION).

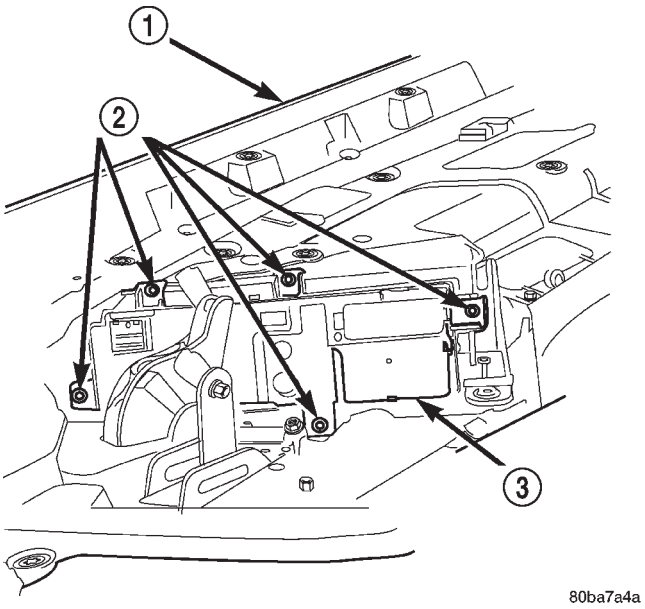

Fig. 8 Door Module Remove/Install

1 - FRONT DOOR TRIM PANEL
2 - SCREW (5)
3 - DOOR MODULE

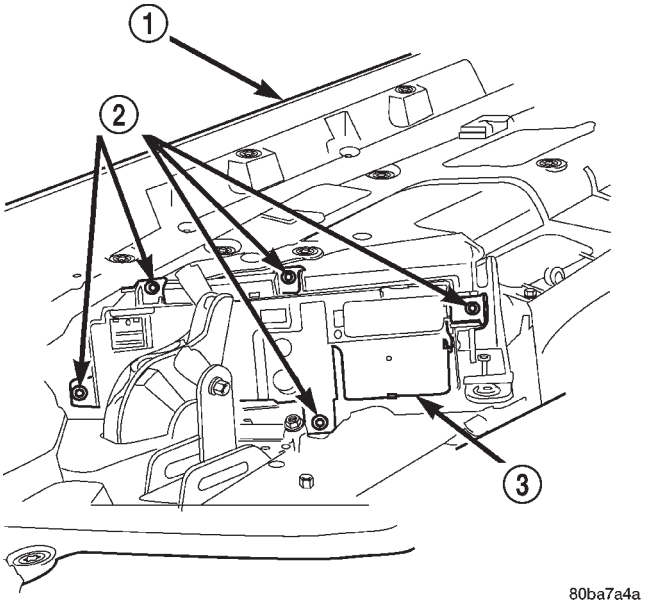

Fig. 9 Door Module Remove/Install

1 - FRONT DOOR TRIM PANEL
2 - SCREW (5)
3 - DOOR MODULE

(4) Reconnect the battery negative cable.

MEMORY HEATED SEAT/ MIRROR MODULE

DESCRIPTION

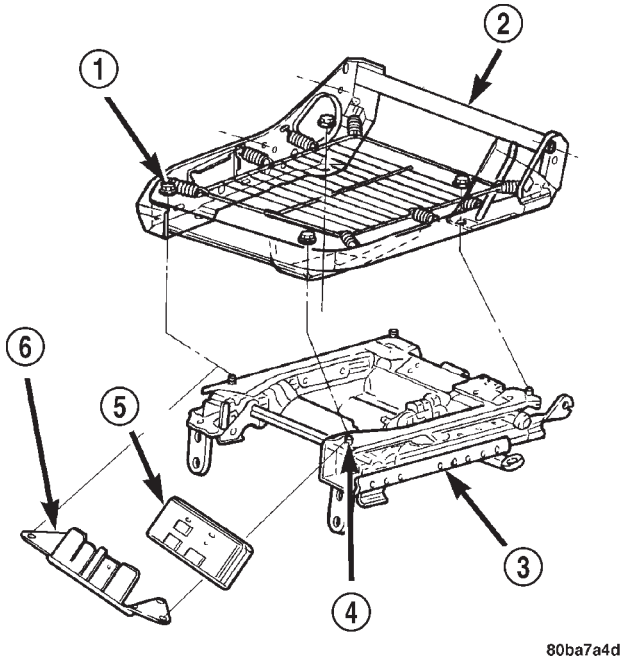

Fig. 10 Heated Seat Module Remove/Install

1 - NUT (4)
2 - SEAT CUSHION FRAME
3 - POWER SEAT TRACK
4 - STUD (4)
5 - MODULE
6 - BRACKET

There are two different electronic modules that can be used in the optional heated seat system. The Heated Seat Module (HSM) is used on vehicles that are not equipped with the optional Memory System. The Memory Heated Seat Module (MHSM) is used on vehicles that are equipped with the optional Memory System and the optional heated seat system. A third electronic module, the Memory Seat Module (MSM), is used on vehicles equipped with the Memory System without the optional heated seat system. Refer to **Memory System** in Power Seat Systems for more information on the memory system option.

All three modules are packaged in an identical molded plastic housing which is mounted on a bracket that is located between the power seat track and the seat cushion frame under the forward edge of the driver side front seat cushion (Fig. 10). The HSM or MHSM is used to control all of the heated seat system functions for both front seats. The HSM or MHSM contains a central processing unit and interfaces with other electronic modules in the vehicle on the Programmable Communications Interface (PCI) data bus network.

For diagnosis of the HSM, MHSM or the PCI data bus, a DRB® scan tool and the proper Diagnostic Procedures manual are recommended. The HSM or MHSM cannot be repaired and, if faulty or damaged, it must be replaced.

OPERATION

The MSM receives hard wired inputs from the power seat switch and the potentiometers on each of the driver side power seat motors. The MSM receives messages over the PCI data bus from the Driver Door Module (DDM) (memory switch status), the Powertrain Control Module (PCM) (vehicle speed status), and the Body Control Module (seat belt switch status). The programming in the MSM allows it to process the information from these inputs and send control outputs to each of the driver side power seat motors. The MSM will prevent the seat memory recall function from being initiated if the driver side seat belt is buckled, if the transmission gear selector lever is not in the Park or Neutral positions, or if the vehicle is moving.

DIAGNOSIS & TESTING - HEATED SEAT MODULE

Before testing the heated seat module, test the heated seat switch, the heated seat elements, and the heated seat sensor. Refer to **Heated Seat Switch**, **Heated Seat Element** and **Heated Seat Sensor** in the Diagnosis and Testing section of this group. If testing of the heated seat switch, elements, and sensor reveals no problems, proceed as follows. For complete circuit diagrams, refer to **Power Seat Premium I/III** in Wiring Diagrams.

(1) Disconnect and isolate the battery negative cable. Disconnect both power seat wire harness connectors from the Heated Seat Module (HSM) or Memory Heated Seat Module (MHSM). Check for continuity between each of the two Z1 ground circuit cavities of the C2 power seat wire harness connector for the HSM or MHSM and a good ground. There should be continuity. If OK, go to Step 2. If not OK, repair the open ground circuit to ground as required.

(2) Check for continuity between the Z2 ground circuit cavity of the C1 power seat wire harness connector for the HSM or MHSM and a good ground. There should be continuity. If OK, go to Step 3. If not OK, repair the open ground circuit to ground as required.

(3) Reconnect the battery negative cable. Check for battery voltage at each of the two fused B(+) circuit cavities of the C2 power seat wire harness connector for the HSM or MHSM. If OK, use a DRB® scan tool and the proper Diagnostic Procedures manual to test

MEMORY HEATED SEAT/MIRROR MODULE (Continued)

the HSM or MHSM. If not OK, repair the open fused B(+) circuit to the power seat circuit breaker in the junction block as required.

REMOVAL

(1) Disconnect and isolate the battery negative cable.

(2) Remove the driver side front bucket seat from the power seat track unit. Refer to **Bucket Seat Track Adjuster** in Body for the procedure.

(3) Lift the heated seat module and its mounting bracket off of the two forward studs on the upper mounting rails of the power seat track and move the unit away from the seat far enough to access the power seat wire harness connectors (Fig. 11).

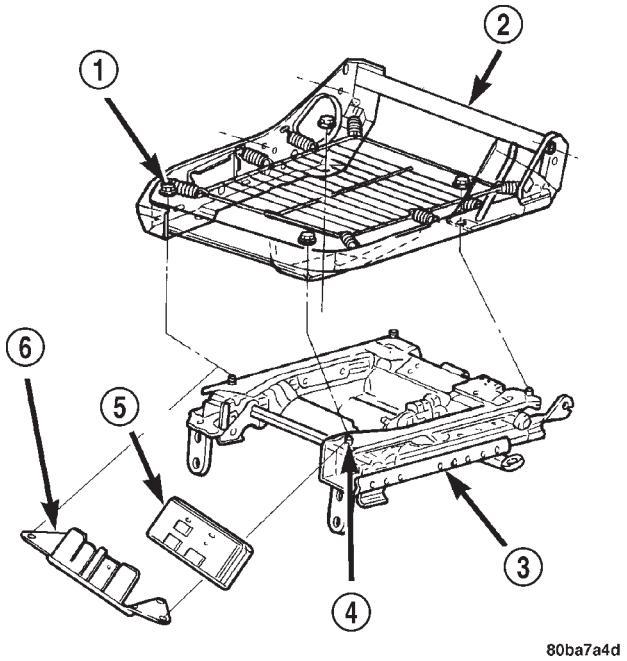

Fig. 11 Heated Seat Module Remove/Install

1 - NUT (4)
2 - SEAT CUSHION FRAME
3 - POWER SEAT TRACK
4 - STUD (4)
5 - MODULE
6 - BRACKET

(4) Disconnect the two power seat wire harness connectors from the heated seat module connector receptacles.

(5) There are two snap clips that are molded into the lower side of the heated seat module which help to secure the module to the riser portion of the stepped mounting bracket. Using a trim stick or another suitable wide flat-bladed tool, gently pry each of the two snap clips while pulling the module away from the mounting bracket.

(6) Slide the heated seat module off of the two mounting bracket slide tabs.

INSTALLATION

(1) Slide the heated seat module onto the two mounting bracket slide tabs. Be certain that the two snap clips that are molded into the lower side of the heated seat module are fully engaged in the holes in riser portion of the stepped mounting bracket.

(2) Position the heated seat module and mounting bracket unit to the front of the power seat track unit.

(3) Reconnect the two power seat wire harness connectors to the heated seat module connector receptacles.

(4) Position the heated seat module mounting bracket over the two forward studs on the upper mounting rails of the power seat track.

(5) Install the driver side front bucket seat onto the power seat track unit. Refer to **Bucket Seat Track Adjuster** in Body for the procedure.

(6) Reconnect the battery negative cable.

NOTE: If the vehicle is equipped with the optional Memory System, following installation, it will be necessary to initialize the Memory Heated Seat Module (MHSM). In order to function properly, the MHSM must "learn" the sensor values of each of the power seat motor position transducers in each of the adjuster hard stop positions. This is done by performing the "Reset Guard Band" procedure using a DRB® scan tool and the proper Diagnostic Procedures manual.

WARNING: THE "RESET GUARD BAND" PROCEDURE WILL CAUSE THE DRIVER SIDE FRONT SEAT TO AUTOMATICALLY ADJUST TO EACH OF ITS TRAVEL LIMITS. BE CERTAIN THAT NO ONE IS SEATED IN THE VEHICLE AND THAT THERE IS NOTHING IN THE VEHICLE THAT WILL OBSTRUCT SEAT MOVEMENT. FAILURE TO OBSERVE THIS WARNING COULD RESULT IN PERSONAL INJURIES AND/OR VEHICLE DAMAGE.

POWERTRAIN CONTROL MODULE

DESCRIPTION - PCM

The Powertrain Control Module (PCM) is located in the engine compartment (Fig. 12). The PCM is referred to as JTEC.

POWERTRAIN CONTROL MODULE (Continued)

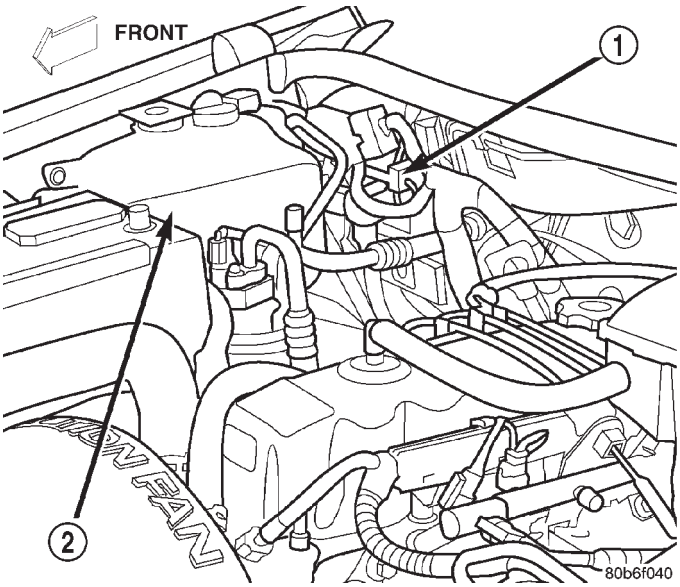

Fig. 12 PCM Location

1 - PCM
2 - COOLANT TANK

MODES OF OPERATION

As input signals to the Powertrain Control Module (PCM) change, the PCM adjusts its response to the output devices. For example, the PCM must calculate different injector pulse width and ignition timing for idle than it does for wide open throttle (WOT).

The PCM will operate in two different modes: **Open Loop and Closed Loop**.

During Open Loop modes, the PCM receives input signals and responds only according to preset PCM programming. Input from the oxygen (O2S) sensors is not monitored during Open Loop modes.

During Closed Loop modes, the PCM will monitor the oxygen (O2S) sensors input. This input indicates to the PCM whether or not the calculated injector pulse width results in the ideal air-fuel ratio. This ratio is 14.7 parts air-to-1 part fuel. By monitoring the exhaust oxygen content through the O2S sensor, the PCM can fine tune the injector pulse width. This is done to achieve optimum fuel economy combined with low emission engine performance.

The fuel injection system has the following modes of operation:

- Ignition switch ON
- Engine start-up (crank)
- Engine warm-up
- Idle
- Cruise
- Acceleration
- Deceleration
- Wide open throttle (WOT)
- Ignition switch OFF

The ignition switch On, engine start-up (crank), engine warm-up, acceleration, deceleration and wide open throttle modes are Open Loop modes. The idle and cruise modes, (with the engine at operating temperature) are Closed Loop modes.

IGNITION SWITCH (KEY-ON) MODE

This is an Open Loop mode. When the fuel system is activated by the ignition switch, the following actions occur:

- The PCM pre-positions the idle air control (IAC) motor.
- The PCM determines atmospheric air pressure from the MAP sensor input to determine basic fuel strategy.
- The PCM monitors the engine coolant temperature sensor input. The PCM modifies fuel strategy based on this input.
- Intake manifold air temperature sensor input is monitored.
- Throttle position sensor (TPS) is monitored.
- The auto shutdown (ASD) relay is energized by the PCM for approximately three seconds.
- The fuel pump is energized through the fuel pump relay by the PCM. The fuel pump will operate for approximately three seconds unless the engine is operating or the starter motor is engaged.
- The O2S sensor heater element is energized via the O2S relays. The O2S sensor input is not used by the PCM to calibrate air-fuel ratio during this mode of operation.

ENGINE START-UP MODE

This is an Open Loop mode. The following actions occur when the starter motor is engaged.

The PCM receives inputs from:

- Battery voltage
- Engine coolant temperature sensor
- Crankshaft position sensor
- Intake manifold air temperature sensor
- Manifold absolute pressure (MAP) sensor
- Throttle position sensor (TPS)
- Starter motor relay
- Camshaft position sensor signal

The PCM monitors the crankshaft position sensor. If the PCM does not receive a crankshaft position sensor signal within approximately 3 seconds of cranking the engine, it will shut down the fuel injection system.

The fuel pump is activated by the PCM through the fuel pump relay.

Voltage is applied to the fuel injectors with the ASD relay via the PCM. The PCM will then control the injection sequence and injector pulse width by turning the ground circuit to each individual injector on and off.

POWERTRAIN CONTROL MODULE (Continued)

The PCM determines the proper ignition timing according to input received from the crankshaft position sensor.

ENGINE WARM-UP MODE

This is an Open Loop mode. During engine warm-up, the PCM receives inputs from:

- Battery voltage
- Crankshaft position sensor
- Engine coolant temperature sensor
- Intake manifold air temperature sensor
- Manifold absolute pressure (MAP) sensor
- Throttle position sensor (TPS)
- Camshaft position sensor signal
- Park/neutral switch (gear indicator signal—auto. trans. only)
- Air conditioning select signal (if equipped)
- Air conditioning request signal (if equipped)

Based on these inputs the following occurs:

- Voltage is applied to the fuel injectors with the ASD relay via the PCM. The PCM will then control the injection sequence and injector pulse width by turning the ground circuit to each individual injector on and off.
- The PCM adjusts engine idle speed through the idle air control (IAC) motor and adjusts ignition timing.
- The PCM operates the A/C compressor clutch through the clutch relay. This is done if A/C has been selected by the vehicle operator and requested by the A/C thermostat.
- When engine has reached operating temperature, the PCM will begin monitoring O2S sensor input. The system will then leave the warm-up mode and go into closed loop operation.

IDLE MODE

When the engine is at operating temperature, this is a Closed Loop mode. At idle speed, the PCM receives inputs from:

- Air conditioning select signal (if equipped)
- Air conditioning request signal (if equipped)
- Battery voltage
- Crankshaft position sensor
- Engine coolant temperature sensor
- Intake manifold air temperature sensor
- Manifold absolute pressure (MAP) sensor
- Throttle position sensor (TPS)
- Camshaft position sensor signal
- Battery voltage
- Park/neutral switch (gear indicator signal—auto. trans. only)
- Oxygen sensors

Based on these inputs, the following occurs:

- Voltage is applied to the fuel injectors with the ASD relay via the PCM. The PCM will then control injection sequence and injector pulse width by turning the ground circuit to each individual injector on and off.
- The PCM monitors the O2S sensor input and adjusts air-fuel ratio by varying injector pulse width. It also adjusts engine idle speed through the idle air control (IAC) motor.
- The PCM adjusts ignition timing by increasing and decreasing spark advance.
- The PCM operates the A/C compressor clutch through the clutch relay. This happens if A/C has been selected by the vehicle operator and requested by the A/C thermostat.

CRUISE MODE

When the engine is at operating temperature, this is a Closed Loop mode. At cruising speed, the PCM receives inputs from:

- Air conditioning select signal (if equipped)
- Air conditioning request signal (if equipped)
- Battery voltage
- Engine coolant temperature sensor
- Crankshaft position sensor
- Intake manifold air temperature sensor
- Manifold absolute pressure (MAP) sensor
- Throttle position sensor (TPS)
- Camshaft position sensor signal
- Park/neutral switch (gear indicator signal—auto. trans. only)
- Oxygen (O2S) sensors

Based on these inputs, the following occurs:

- Voltage is applied to the fuel injectors with the ASD relay via the PCM. The PCM will then adjust the injector pulse width by turning the ground circuit to each individual injector on and off.
- The PCM monitors the O2S sensor input and adjusts air-fuel ratio. It also adjusts engine idle speed through the idle air control (IAC) motor.
- The PCM adjusts ignition timing by turning the ground path to the coil on and off.
- The PCM operates the A/C compressor clutch through the clutch relay. This happens if A/C has been selected by the vehicle operator and requested by the A/C thermostat.

ACCELERATION MODE

This is an Open Loop mode. The PCM recognizes an abrupt increase in throttle position or MAP pressure as a demand for increased engine output and vehicle acceleration. The PCM increases injector pulse width in response to increased throttle opening.

DECELERATION MODE

When the engine is at operating temperature, this is an Open Loop mode. During hard deceleration, the PCM receives the following inputs.

POWERTRAIN CONTROL MODULE (Continued)

- Air conditioning select signal (if equipped)
- Air conditioning request signal (if equipped)
- Battery voltage
- Engine coolant temperature sensor
- Crankshaft position sensor
- Intake manifold air temperature sensor
- Manifold absolute pressure (MAP) sensor
- Throttle position sensor (TPS)
- Camshaft position sensor signal
- Park/neutral switch (gear indicator signal—auto. trans. only)
- Vehicle speed

If the vehicle is under hard deceleration with the proper rpm and closed throttle conditions, the PCM will ignore the oxygen sensor input signal. The PCM will enter a fuel cut-off strategy in which it will not supply a ground to the injectors. If a hard deceleration does not exist, the PCM will determine the proper injector pulse width and continue injection.

Based on the above inputs, the PCM will adjust engine idle speed through the idle air control (IAC) motor.

The PCM adjusts ignition timing by turning the ground path to the coil on and off.

WIDE OPEN THROTTLE MODE

This is an Open Loop mode. During wide open throttle operation, the PCM receives the following inputs.

- Battery voltage
- Crankshaft position sensor
- Engine coolant temperature sensor
- Intake manifold air temperature sensor
- Manifold absolute pressure (MAP) sensor
- Throttle position sensor (TPS)
- Camshaft position sensor signal

During wide open throttle conditions, the following occurs:

- Voltage is applied to the fuel injectors with the ASD relay via the PCM. The PCM will then control the injection sequence and injector pulse width by turning the ground circuit to each individual injector on and off. The PCM ignores the oxygen sensor input signal and provides a predetermined amount of additional fuel. This is done by adjusting injector pulse width.
- The PCM adjusts ignition timing by turning the ground path to the coil on and off.

IGNITION SWITCH OFF MODE

When ignition switch is turned to OFF position, the PCM stops operating the injectors, ignition coil, ASD relay and fuel pump relay.

DESCRIPTION - 5 VOLT SUPPLIES

Two different Powertrain Control Module (PCM) five volt supply circuits are used; primary and secondary.

DESCRIPTION - IGNITION CIRCUIT SENSE

This circuit ties the ignition switch to the Powertrain Control Module (PCM).

DESCRIPTION - POWER GROUNDS

The Powertrain Control Module (PCM) has 2 main grounds. Both of these grounds are referred to as power grounds. All of the high-current, noisy, electrical devices are connected to these grounds as well as all of the sensor returns. The sensor return comes into the sensor return circuit, passes through noise suppression, and is then connected to the power ground.

The power ground is used to control ground circuits for the following PCM loads:

- Generator field winding
- Fuel injectors
- Ignition coil(s)
- Certain relays/solenoids
- Certain sensors

DESCRIPTION - SENSOR RETURN

The Sensor Return circuits are internal to the Powertrain Control Module (PCM).

Sensor Return provides a low–noise ground reference for all engine control system sensors. Refer to Power Grounds for more information.

OPERATION - PCM

(1) Also refer to Modes of Operation.

The PCM operates the fuel system. The PCM is a pre-programmed, triple microprocessor digital computer. It regulates ignition timing, air-fuel ratio, emission control devices, charging system, certain transmission features, speed control, air conditioning compressor clutch engagement and idle speed. The PCM can adapt its programming to meet changing operating conditions.

The PCM receives input signals from various switches and sensors. Based on these inputs, the PCM regulates various engine and vehicle operations through different system components. These components are referred to as Powertrain Control Module (PCM) Outputs. The sensors and switches that provide inputs to the PCM are considered Powertrain Control Module (PCM) Inputs.

The PCM adjusts ignition timing based upon inputs it receives from sensors that react to: engine rpm, manifold absolute pressure, engine coolant temperature, throttle position, transmission gear selec-

POWERTRAIN CONTROL MODULE (Continued)

tion (automatic transmission), vehicle speed and the brake switch.

The PCM adjusts idle speed based on inputs it receives from sensors that react to: throttle position, vehicle speed, transmission gear selection, engine coolant temperature and from inputs it receives from the air conditioning clutch switch and brake switch.

Based on inputs that it receives, the PCM adjusts ignition coil dwell. The PCM also adjusts the generator charge rate through control of the generator field and provides speed control operation.

NOTE: PCM Inputs:

- A/C request
- Auto shutdown (ASD) sense
- Battery temperature
- Battery voltage
- Brake switch
- J1850 bus circuits
- Camshaft position sensor signal
- Crankshaft position sensor
- Data link connections for DRB scan tool
- Engine coolant temperature sensor
- Five volts (primary)
- Five volts (secondary)
- Fuel level
- Generator (battery voltage) output
- Ignition circuit sense (ignition switch in on/off/crank/run position)
- Intake manifold air temperature sensor
- Leak detection pump (switch) sense (if equipped)
- Manifold absolute pressure (MAP) sensor
- Oil pressure
- Overdrive/override switch
- Oxygen sensors
- Park/neutral switch (auto. trans. only)
- Power ground
- Sensor return
- Signal ground
- Speed control multiplexed single wire input
- Throttle position sensor
- Transmission governor pressure sensor
- Transmission temperature sensor
- Vehicle speed (from ABS module)

NOTE: PCM Outputs:

- A/C clutch relay
- Auto shutdown (ASD) relay
- J1850 (+/-) circuits for: speedometer, voltmeter, fuel gauge, oil pressure gauge/lamp, engine temp. gauge and speed control warn. lamp
- Data link connection for DRB scan tool
- EGR valve control solenoid (if equipped)
- EVAP canister purge solenoid
- Fuel injectors
- Fuel pump relay
- Generator field driver (-)
- Generator field driver (+)
- Generator lamp (if equipped)
- Idle air control (IAC) motor
- Ignition coil
- Leak detection pump
- Malfunction indicator lamp (Check engine lamp). Driven through J1850 circuits.
- Overdrive indicator lamp (if equipped). Driven through J1850 circuits.
- Oxygen sensor heater relays (if equipped).
- Radiator cooling fan relay (pulse width modulated)
- Speed control source
- Speed control vacuum solenoid
- Speed control vent solenoid
- Tachometer (if equipped). Driven through J1850 circuits.
- Transmission convertor clutch circuit
- Transmission 3–4 shift solenoid
- Transmission relay
- Transmission temperature lamp (if equipped)
- Transmission variable force solenoid

OPERATION - 5 VOLT SUPPLIES

Primary 5–volt supply:

- supplies the required 5 volt power source to the Crankshaft Position (CKP) sensor.
- supplies the required 5 volt power source to the Camshaft Position (CMP) sensor.
- supplies a reference voltage for the Manifold Absolute Pressure (MAP) sensor.
- supplies a reference voltage for the Throttle Position Sensor (TPS) sensor.

Secondary 5–volt supply:

- supplies the required 5 volt power source to the oil pressure sensor.
- supplies the required 5 volt power source for the Vehicle Speed Sensor (VSS) (if equipped).
- supplies the 5 volt power source to the transmission pressure sensor (if equipped with an RE automatic transmission).

OPERATION - IGNITION CIRCUIT SENSE

The ignition circuit sense input tells the PCM the ignition switch has energized the ignition circuit.

Battery voltage is also supplied to the PCM through the ignition switch when the ignition is in the RUN or START position. This is referred to as the ″ignition sense″ circuit and is used to ″wake up″ the PCM. Voltage on the ignition input can be as low as 6 volts and the PCM will still function. Voltage is supplied to this circuit to power the PCM's 8-volt regulator and to allow the PCM to perform fuel, ignition and emissions control functions.

POWERTRAIN CONTROL MODULE (Continued)

REMOVAL

USE THE DRB SCAN TOOL TO REPROGRAM THE NEW POWERTRAIN CONTROL MODULE (PCM) WITH THE VEHICLES ORIGINAL IDENTIFICATION NUMBER (VIN) AND THE VEHICLES ORIGINAL MILEAGE. IF THIS STEP IS NOT DONE, A DIAGNOSTIC TROUBLE CODE (DTC) MAY BE SET.

The PCM is located on the cowl panel in right/rear side of engine compartment (Fig. 13).

The PCM is located on the cowl panel in right/rear side of engine compartment (Fig. 13).

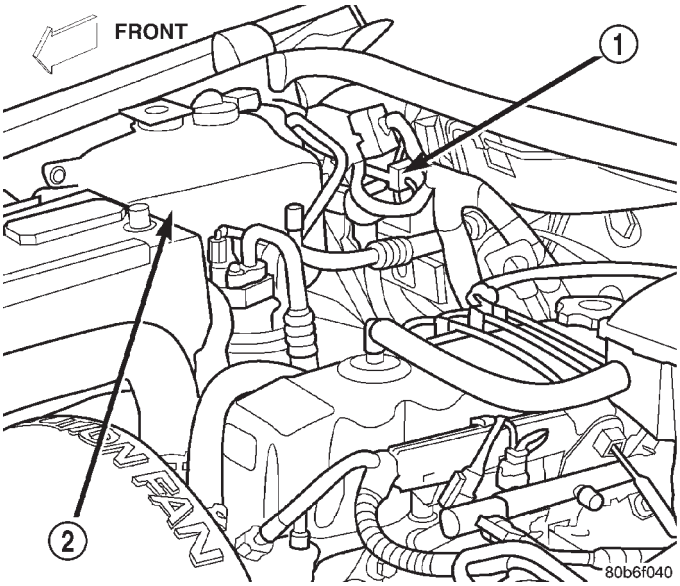

Fig. 13 Powertrain Control Module (PCM) Location

1 - PCM
2 - COOLANT TANK

To avoid possible voltage spike damage to PCM, ignition key must be off, and negative battery cable must be disconnected before unplugging PCM connectors.

(1) Disconnect negative battery cable at battery.

(2) If equipped, remove Transmission Control Module (TCM).

(3) Remove coolant reserve/overflow tank.

(4) Remove cover over electrical connectors. Cover snaps onto PCM.

(5) Carefully unplug three 32–way connectors at PCM.

(6) Remove three PCM bracket-to-body mounting nuts (Fig. 14).

(7) Remove PCM/PCM bracket assembly from vehicle.

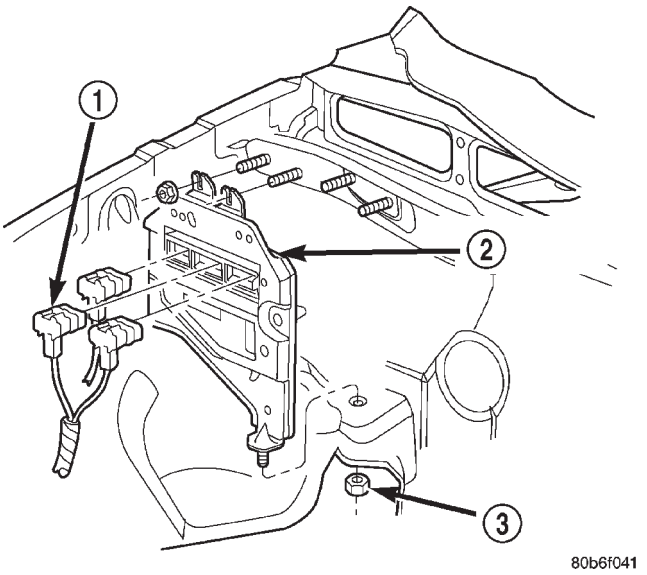

Fig. 14 Powertrain Control Module (PCM) 32–Way Connectors

1 - 3 32–WAY CONNECTORS
2 - PCM/BRACKET ASSEMBLY
3 - BRACKET NUTS (3)

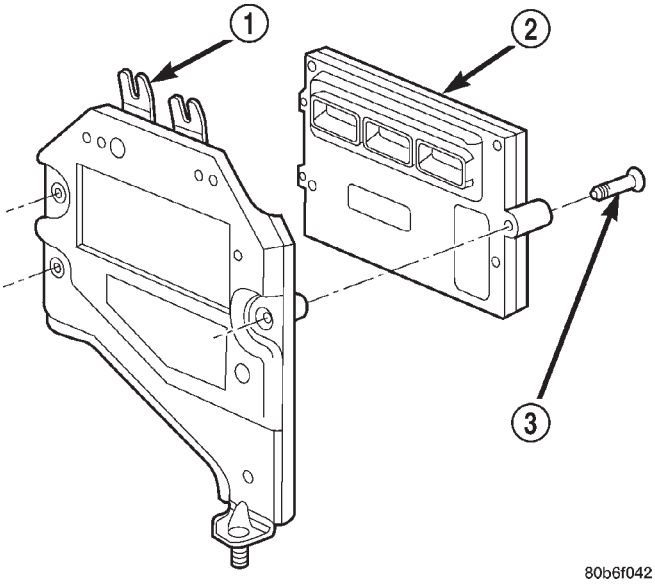

Fig. 15 Powertrain Control Module (PCM) Mounting Bracket

1 - PCM BRACKET
2 - PCM
3 - PCM-TO-BRACKET SCREWS (3)

(8) Remove 3 PCM-to-PCM bracket bolts (screws) (Fig. 15).

POWERTRAIN CONTROL MODULE (Continued)

INSTALLATION

USE THE DRB SCAN TOOL TO REPROGRAM THE NEW POWERTRAIN CONTROL MODULE (PCM) WITH THE VEHICLES ORIGINAL IDENTIFICATION NUMBER (VIN) AND THE VEHICLES ORIGINAL MILEAGE. IF THIS STEP IS NOT DONE, A DIAGNOSTIC TROUBLE CODE (DTC) MAY BE SET.

The PCM is located on the cowl panel in right/rear side of engine compartment (Fig. 13).

(1) Check pins in three 32–way electrical connectors for damage. Repair as necessary.

(2) Install PCM to its mounting bracket. Tighten three mounting bolts to 3 N·m (25 in. lbs.) torque.

(3) Install PCM/PCM bracket to body. Install 3 nuts and tighten 9 N·m (80 in. lbs.) torque.

(4) Install three 32–way connectors.

(5) Install cover over electrical connectors. Cover snaps onto PCM.

(6) Install coolant reserve/overflow tank.

(7) If equipped, install Transmission Control Module (TCM).

(8) Connect negative cable to battery.

(9) Use the DRB scan tool to reprogram new PCM with vehicles original Identification Number (VIN) and original vehicle mileage.

SENTRY KEY IMMOBILIZER MODULE

DESCRIPTION

The Sentry Key Immobilizer Module (SKIM) is the primary component of the Sentry Key Immobilizer System (SKIS) (Fig. 16). The SKIM is located on the underside of the steering column, below the ignition lock cylinder housing and is concealed beneath the steering column shrouds. The molded black plastic housing for the SKIM has an integral molded plastic halo-like antenna ring that extends from one side. When the SKIM is properly installed on the steering column, the antenna ring is oriented around the circumference of the ignition lock cylinder housing. A single integral connector receptacle containing six terminal pins is located on the opposite end of the SKIM housing from the antenna ring. A molded plastic mounting tab that is integral to the SKIM housing has a hole in the center through which a screw passes to secure the unit to the underside of the steering column. The SKIM is connected to the vehicle electrical system through a single take out and connector of the instrument panel wire harness.

The SKIM cannot be adjusted or repaired. If faulty or damaged, the entire SKIM unit must be replaced.

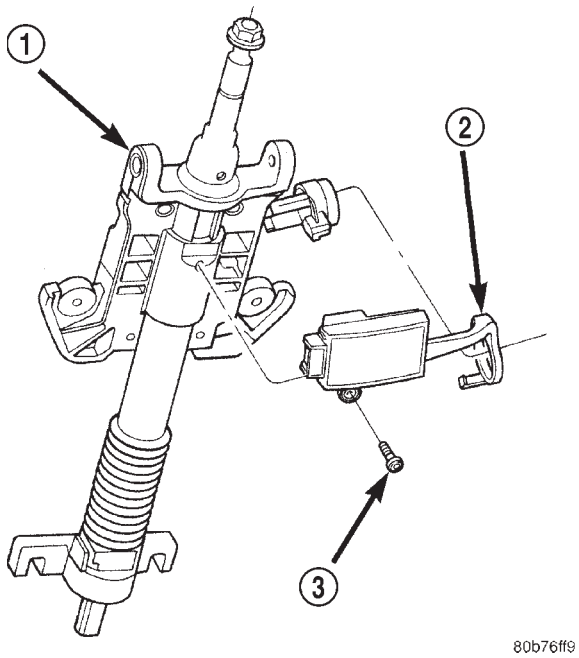

Fig. 16 Sentry Key Immobilizer Module

1 - STEERING COLUMN
2 - SKIM
3 - MOUNTING SCREW

OPERATION

The Sentry Key Immobilizer Module (SKIM) contains a Radio Frequency (RF) transceiver and a microprocessor. The SKIM transmits RF signals to, and receives RF signals from the Sentry Key transponder through a tuned antenna enclosed within the molded plastic antenna ring integral to the SKIM housing. If this antenna ring is not mounted properly around the ignition lock cylinder housing, communication problems between the SKIM and the transponder may arise. These communication problems will result in Sentry Key transponder-related faults. The SKIM also communicates over the Programmable Communications Interface (PCI) data bus with the Powertrain Control Module (PCM), the ElectroMechanical Instrument Cluster (EMIC), the Body Control Module (BCM), and/or the DRBIII® scan tool.

The SKIM retains in memory the ID numbers of any Sentry Key transponder that is programmed into it. A maximum of eight Sentry Key transponders can be programmed into the SKIM. For added system security, each SKIM is programmed with a unique Secret Key code. This code is stored in memory, sent over the CCD data bus to the PCM, and is encoded to the transponder of every Sentry Key that is programmed into the SKIM. Therefore, the Secret Key code is a common element that is found in every component of the Sentry Key Immobilizer System (SKIS). Another security code, called a PIN, is used to gain

SENTRY KEY IMMOBILIZER MODULE (Continued)

access to the SKIM Secured Access Mode. The Secured Access Mode is required during service to perform the SKIS initialization and Sentry Key transponder programming procedures. The SKIM also stores the Vehicle Identification Number (VIN) in its memory, which it learns through a CCD data bus message from the PCM during SKIS initialization.

In the event that a SKIM replacement is required, the Secret Key code can be transferred to the new SKIM from the PCM using the DRBIII® scan tool and the SKIS initialization procedure. Proper completion of the SKIS initialization will allow the existing Sentry Keys to be programmed into the new SKIM so that new keys will not be required. In the event that the original Secret Key code cannot be recovered, SKIM replacement will also require new Sentry Keys. The DRBIII® scan tool will alert the technician during the SKIS initialization procedure if new Sentry Keys are required.

When the ignition switch is turned to the On position, the SKIM transmits an RF signal to the transponder in the ignition key. The SKIM then waits for an RF signal response from the transponder. If the response received identifies the key as valid, the SKIM sends a valid key message to the PCM over the CCD data bus. If the response received identifies the key as invalid, or if no response is received from the key transponder, the SKIM sends an invalid key message to the PCM. The PCM will enable or disable engine operation based upon the status of the SKIM messages. It is important to note that the default condition in the PCM is an invalid key; therefore, if no message is received from the SKIM by the PCM, the engine will be disabled and the vehicle immobilized after two seconds of running.

The SKIM also sends indicator light status messages to the EMIC over the PCI data bus to tell the EMIC how to operate the SKIS indicator. This indicator light status message tells the EMIC to turn the indicator on for about three seconds each time the ignition switch is turned to the On position as a bulb test. After completion of the bulb test, the SKIM sends indicator light status messages to the EMIC to turn the indicator off, turn the indicator on, or to flash the indicator on and off. If the SKIS indicator lamp flashes or stays on solid after the bulb test, it signifies a SKIS fault. If the SKIM detects a system malfunction and/or the SKIS has become inoperative, the SKIS indicator will stay on solid. If the SKIM detects an invalid key or if a key transponder-related fault exists, the SKIS indicator will flash. If the vehicle is equipped with the Customer Learn transponder programming feature, the SKIM will also send messages to the EMIC to flash the SKIS indicator lamp, and to the BCM to generate a single audible chime tone whenever the Customer Learn programming mode is being utilized. (Refer to 8 - ELECTRICAL/VEHICLE THEFT SECURITY - STANDARD PROCEDURE - SENTRY KEY TRANSPONDER PROGRAMMING).

The SKIS performs a self-test each time the ignition switch is turned to the On position, and will store fault information in the form of Diagnostic Trouble Codes (DTC's) in SKIM memory if a system malfunction is detected. The SKIM can be diagnosed, and any stored DTC's can be retrieved using a DRBIII® scan tool. Refer to the appropriate diagnostic information.

REMOVAL

WARNING: ON VEHICLES EQUIPPED WITH AIRBAGS, DISABLE THE AIRBAG SYSTEM BEFORE ATTEMPTING ANY STEERING WHEEL, STEERING COLUMN, OR INSTRUMENT PANEL COMPONENT DIAGNOSIS OR SERVICE. DISCONNECT AND ISOLATE THE BATTERY NEGATIVE (GROUND) CABLE, THEN WAIT TWO MINUTES FOR THE AIRBAG SYSTEM CAPACITOR TO DISCHARGE BEFORE PERFORMING FURTHER DIAGNOSIS OR SERVICE. THIS IS THE ONLY SURE WAY TO DISABLE THE AIRBAG SYSTEM. FAILURE TO TAKE THE PROPER PRECAUTIONS COULD RESULT IN ACCIDENTAL AIRBAG DEPLOYMENT AND POSSIBLE PERSONAL INJURY.

(1) Disconnect and isolate the battery negative cable.

(2) Remove the steering column opening cover from the instrument panel. (Refer to 23 - BODY/INSTRUMENT PANEL/STEERING COLUMN OPENING COVER - REMOVAL).

(3) Disconnect the instrument panel wire harness connector for the Sentry Key Immobilizer Module (SKIM) from the SKIM connector receptacle.

(4) Remove the one screw that secures the SKIM to the bottom of the steering column housing between the ignition switch and the ignition lock cylinder (Fig. 17).

(5) Pull the lower right side of the fixed column shroud away from the ignition lock cylinder far enough to disengage the antenna ring of the SKIM from around the ignition lock cylinder housing.

(6) Remove the SKIM from the steering column.

SENTRY KEY IMMOBILIZER MODULE (Continued)

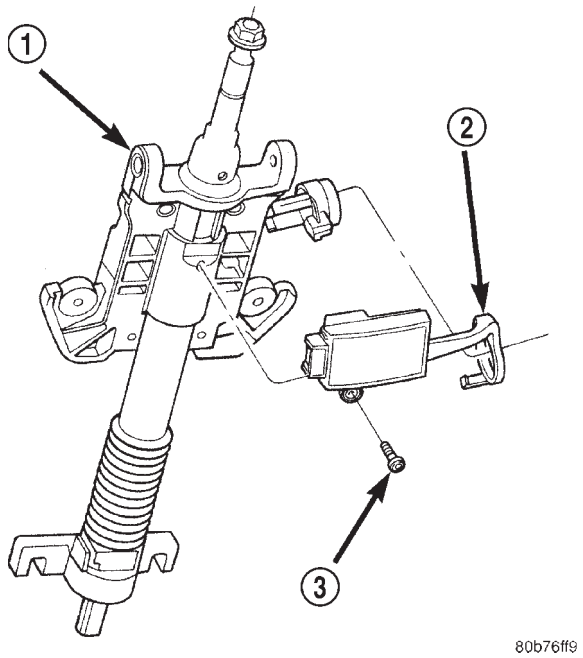

Fig. 17 Sentry Key Immobilizer Module Remove/ Install

1 - STEERING COLUMN
2 - SKIM
3 - MOUNTING SCREW

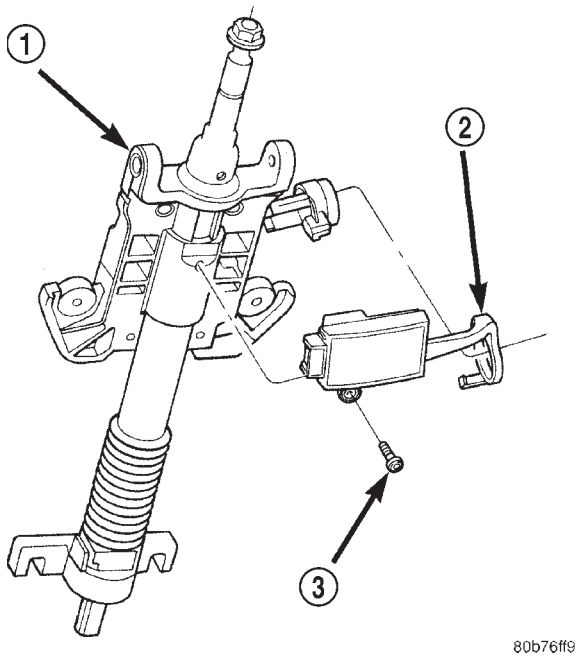

Fig. 18 Sentry Key Immobilizer Module Remove/ Install

1 - STEERING COLUMN
2 - SKIM
3 - MOUNTING SCREW

INSTALLATION

WARNING: ON VEHICLES EQUIPPED WITH AIRBAGS, DISABLE THE AIRBAG SYSTEM BEFORE ATTEMPTING ANY STEERING WHEEL, STEERING COLUMN, OR INSTRUMENT PANEL COMPONENT DIAGNOSIS OR SERVICE. DISCONNECT AND ISOLATE THE BATTERY NEGATIVE (GROUND) CABLE, THEN WAIT TWO MINUTES FOR THE AIRBAG SYSTEM CAPACITOR TO DISCHARGE BEFORE PERFORMING FURTHER DIAGNOSIS OR SERVICE. THIS IS THE ONLY SURE WAY TO DISABLE THE AIRBAG SYSTEM. FAILURE TO TAKE THE PROPER PRECAUTIONS COULD RESULT IN ACCIDENTAL AIRBAG DEPLOYMENT AND POSSIBLE PERSONAL INJURY.

(1) Position the SKIM to the underside of the steering column (Fig. 18).

(2) Pull the lower right side of the fixed column shroud away from the ignition lock cylinder far enough to engage the antenna ring of the SKIM around the ignition lock cylinder housing.

(3) Install and tighten the one screw that secures the SKIM to the bottom of the steering column housing between the ignition switch and the ignition lock cylinder. Tighten the screw to 3.4 N·m (30 in lbs.).

(4) Reconnect the instrument panel wire harness connector for the SKIM to the SKIM connector receptacle.

(5) Reinstall the steering column opening cover onto the instrument panel. (Refer to 23 - BODY/INSTRUMENT PANEL/STEERING COLUMN OPENING COVER - INSTALLATION).

(6) Reconnect the battery negative cable.

TRANSMISSION CONTROL MODULE

DESCRIPTION

The Transmission Control Module (TCM) is located in the engine compartment on the right (passenger) side and is mounted to the inner fender (Fig. 19).

OPERATION

The Transmission Control Module (TCM) is the controlling unit for all electronic operations of the transmission. The TCM receives information regarding vehicle operation from both direct and indirect inputs, and selects the operational mode of the transmission. Direct inputs are hardwired to, and used specifically by the TCM. Indirect inputs originate from other components/modules, and are shared with the TCM via the vehicle communication bus.

TRANSMISSION CONTROL MODULE (Continued)

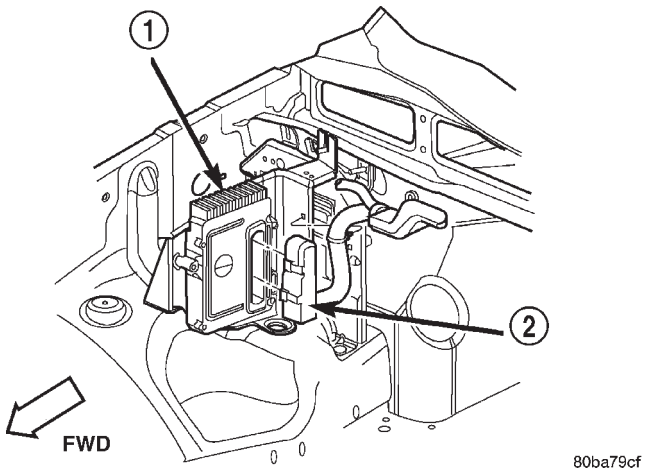

Fig. 19 Transmission Control Module Location

1 - TRANSMISSION CONTROL MODULE (TCM)
2 - 60–WAY CONNECTOR

Some examples of **direct inputs** to the TCM are:
- Battery (B+) voltage
- Ignition "ON" voltage
- Transmission Control Relay (Switched B+)
- Throttle Position Sensor
- Crankshaft Position Sensor
- Transmission Range Sensor
- Pressure Switches
- Transmission Temperature Sensor
- Input Shaft Speed Sensor
- Output Shaft Speed Sensor
- Line Pressure Sensor

Some examples of **indirect inputs** to the TCM are:
- Engine/Body Identification
- Manifold Pressure
- Target Idle
- Torque Reduction Confirmation
- Engine Coolant Temperature
- Ambient/Battery Temperature
- DRB® Scan Tool Communication

Based on the information received from these various inputs, the TCM determines the appropriate shift schedule and shift points, depending on the present operating conditions and driver demand. This is possible through the control of various direct and indirect outputs.

Some examples of TCM **direct outputs** are:
- Transmission Control Relay
- Solenoids
- Torque Reduction Request

Some examples of TCM **indirect outputs** are:
- Transmission Temperature (to PCM)
- PRNDL Position (to BCM)

In addition to monitoring inputs and controlling outputs, the TCM has other important responsibilities and functions:
- Storing and maintaining Clutch Volume Indexes (CVI)
- Storing and selecting appropriate Shift Schedules
- System self-diagnostics
- Diagnostic capabilities (with DRB® scan tool)

NOTE: If the TCM has been replaced, the "Quick Learn Procedure" must be performed. (Refer to 8 - ELECTRICAL/ELECTRONIC CONTROL MODULES/ TRANSMISSION CONTROL MODULE - STANDARD PROCEDURE)

BATTERY FEED

A fused, direct battery feed to the TCM is used for continuous power. This battery voltage is necessary to retain adaptive learn values in the TCM's RAM (Random Access Memory). When the battery (B+) is disconnected, this memory is lost. When the battery (B+) is restored, this memory loss is detected by the TCM and a Diagnostic Trouble Code (DTC) is set.

CLUTCH VOLUME INDEXES (CVI)

An important function of the TCM is to monitor Clutch Volume Indexes (CVI). CVIs represent the volume of fluid needed to compress a clutch pack.

The TCM monitors gear ratio changes by monitoring the Input and Output Speed Sensors. The Input, or Turbine Speed Sensor sends an electrical signal to the TCM that represents input shaft rpm. The Output Speed Sensor provides the TCM with output shaft speed information.

By comparing the two inputs, the TCM can determine transmission gear position. This is important to the CVI calculation because the TCM determines CVIs by monitoring how long it takes for a gear change to occur (Fig. 20).

TRANSMISSION CONTROL MODULE (Continued)

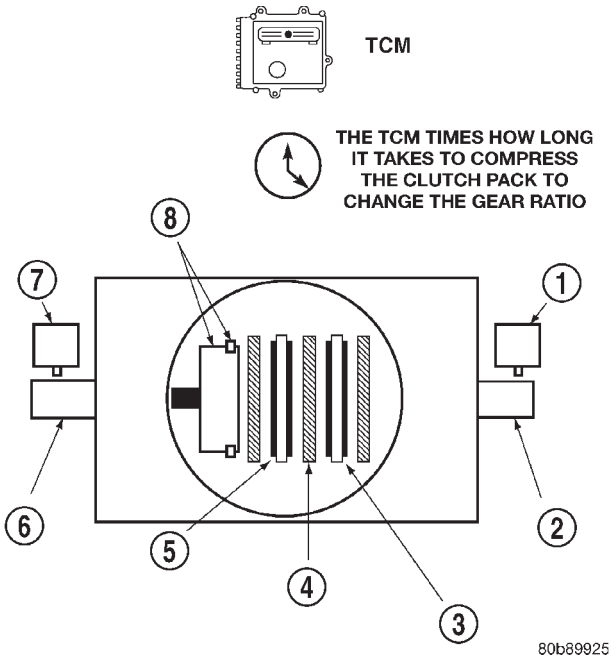

Fig. 20 Example of CVI Calculation

1 - OUTPUT SPEED SENSOR
2 - OUTPUT SHAFT
3 - CLUTCH PACK
4 - SEPARATOR PLATE
5 - FRICTION DISCS
6 - INPUT SHAFT
7 - INPUT SPEED SENSOR
8 - PISTON AND SEAL

Gear ratios can be determined by using the DRB® Scan Tool and reading the Input/Output Speed Sensor values in the "Monitors" display. Gear ratio can be obtained by dividing the Input Speed Sensor value by the Output Speed Sensor value.

For example, if the input shaft is rotating at 1000 rpm and the output shaft is rotating at 500 rpm, then the TCM can determine that the gear ratio is 2:1. In direct drive (3rd gear), the gear ratio changes to 1:1. The gear ratio changes as clutches are applied and released. By monitoring the length of time it takes for the gear ratio to change following a shift request, the TCM can determine the volume of fluid used to apply or release a friction element.

The volume of transmission fluid needed to apply the friction elements are continuously updated for adaptive controls. As friction material wears, the volume of fluid need to apply the element increases.

Certain mechanical problems within the input clutch assembly (broken return springs, out of position snap rings, excessive clutch pack clearance, improper assembly, etc.) can cause inadequate or out-of-range element volumes. Also, defective Input/Output Speed Sensors and wiring can cause these conditions. The following chart identifies the appropriate clutch volumes and when they are monitored/updated:

CLUTCH VOLUMES		
Clutch	**When Updated**	**Proper Clutch Volume**
L/R	2-1 or 3-1 downshift	45 to 134
2C	3-2 kickdown shift	25 to 85
OD	2-3 upshift	30 to 100
4C	3-4 upshift	30 to 85
UD	4-3 kickdown shift	30 to 100

SHIFT SCHEDULES

As mentioned earlier, the TCM has programming that allows it to select a variety of shift schedules. Shift schedule selection is dependent on the following:

- Shift lever position
- Throttle position
- Engine load
- Fluid temperature
- Software level

As driving conditions change, the TCM appropriately adjusts the shift schedule. Refer to the following chart to determine the appropriate operation expected, depending on driving conditions.

TRANSMISSION CONTROL MODULE (Continued)

Schedule	Condition	Expected Operation
Extreme Cold	Oil temperature below -16° F	-Park, Reverse, Neutral and 1st and 3rd gear only in D position, 2nd gear only in Manual 2 or L -No EMCC
Super Cold	Oil temperature between -12° F and 10° F	- Delayed 2-3 upshift - Delayed 3-4 upshift - Early 4-3 coastdown shift - High speed 4-2, 3-2, 2-1 kickdown shifts are prevented -Shifts at high throttle openings willl be early. - No EMCC
Cold	Oil temperature between 10° F and 36° F	-Shift schedule is the same as Super Cold except that the 2-3 upshifts are not delayed.
Warm	Oil temperature 40° F and 80° F	- Normal operation (upshift, kickdowns, and coastdowns) - No EMCC
Hot	Oil temperature above 80° F and 240° F	- Normal operation (upshift, kickdowns, and coastdowns) - Normal EMCC operation
Overheat	Oil temperature above 240° F or engine coolant temperature above 244° F	- Delayed 2-3 upshift - Delayed 3-4 upshift - 3rd gear FEMCC from 30-48 mph - 3rd gear PEMCC above 35 mph - Above 25 mph the torque converter will not unlock unless the throttle is closed or if a wide open throttle 2nd PEMCC to 1 kickdown is made

STANDARD PROCEDURES - TCM QUICK LEARN

The quick learn procedure requires the use of the DRB scan tool.

This program allows the electronic transmission system to recalibrate itself. This will provide the best possible transmission operation. The quick learn procedure should be performed if any of the following procedures are performed:

- Transmission Assembly Replacement
- Transmission Control Module Replacement
- Solenoid Pack Replacement
- Clutch Plate and/or Seal Replacement
- Valve Body Replacement or Recondition

To perform the Quick Learn Procedure, the following conditions must be met:

- The brakes must be applied
- The engine speed must be above 500 rpm
- The throttle angle (TPS) must be less than 3 degrees
- The shift lever position must stay until prompted to shift to overdrive
- The shift lever position must stay in overdrive after the Shift to Overdrive prompt until the DRB indicates the procedure is complete
- The calculated oil temperature must be above 60° and below 200°

ENGINE SYSTEMS

TABLE OF CONTENTS

page

BATTERY SYSTEM 1
CHARGING 28
STARTING 33

BATTERY SYSTEM

TABLE OF CONTENTS

page

BATTERY SYSTEM
DESCRIPTION 1
OPERATION 2
DIAGNOSIS AND TESTING 2
BATTERY SYSTEM 2
CLEANING 5
INSPECTION 5
SPECIFICATIONS 6
BATTERY
DESCRIPTION 7
OPERATION 8
DIAGNOSIS AND TESTING 8
BATTERY 8
STANDARD PROCEDURE 9
CHECKING BATTERY ELECTROLYTE LEVEL 9
BATTERY CHARGING 9
BUILT- IN INDICATOR TEST 12
HYDROMETER TEST 13
OPEN-CIRCUIT VOLTAGE TEST 14
LOAD TEST 15
IGNITION-OFF DRAW TEST 16
REMOVAL 17
INSTALLATION 18
BATTERY HOLDDOWN
DESCRIPTION 19
OPERATION 19
REMOVAL 19
INSTALLATION 19
BATTERY CABLE
DESCRIPTION 20
OPERATION 21
DIAGNOSIS AND TESTING 21
BATTERY CABLE 21
REMOVAL 23
INSTALLATION 23
BATTERY TRAY
DESCRIPTION 25
OPERATION 25
REMOVAL 25
INSTALLATION 26
THERMAL GUARD
DESCRIPTION 26
OPERATION 26
REMOVAL 26
INSTALLATION 27

BATTERY SYSTEM

DESCRIPTION

A single 12-volt battery system is standard factory-installed equipment on this model. All of the components of the battery system are located within the engine compartment of the vehicle. The service information for the battery system in this vehicle covers the following related components, which are covered in further detail elsewhere in this service manual:

- **Battery** - The storage battery provides a reliable means of storing a renewable source of electrical energy within the vehicle.
- **Battery Cable** - The battery cables connect the battery terminal posts to the vehicle electrical system.
- **Battery Holddown** - The battery holddown hardware secures the battery in the battery tray in the engine compartment.
- **Battery Thermoguard** - The battery thermoguard insulates the battery to protect it from engine compartment temperature extremes.

BATTERY SYSTEM (Continued)

- **Battery Tray** - The battery tray provides a secure mounting location in the vehicle for the battery and an anchor point for the battery holddown hardware.

For battery system maintenance schedules and jump starting procedures, see the owner's manual in the vehicle glove box. Optionally, refer to Lubrication and Maintanance for the recommended battery maintenance schedules and for the proper battery jump starting procedures. While battery charging can be considered a maintenance procedure, the battery charging procedures and related information are located in the standard procedures section of this service manual. This was done because the battery must be fully-charged before any battery system diagnosis or testing procedures can be performed. Refer to Standard procedures for the proper battery charging procedures.

OPERATION

The battery system is designed to provide a safe, efficient, reliable and mobile means of producing, delivering and storing electrical energy. This electrical energy is required to operate the engine starting system, as well as to operate many of the other vehicle accessory systems for limited durations while the engine and/or the charging system are not operating. The battery system is also designed to provide a reserve of electrical energy to supplement the charging system for short durations while the engine is running and the electrical current demands of the vehicle exceed the output of the charging system. In addition to producing, delivering, and storing electrical energy for the vehicle, the battery system serves as a capacitor and voltage stabilizer for the vehicle electrical system. It absorbs most abnormal or transient voltages caused by the switching of any of the electrical components or circuits in the vehicle.

DIAGNOSIS AND TESTING - BATTERY SYSTEM

The battery, starting, and charging systems in the vehicle operate with one another and must be tested as a single complete system. In order for the engine to start and the battery to charge properly, all of the components that are used in these systems must perform within specifications. It is important that the battery, starting, and charging systems be thoroughly tested and inspected any time a battery needs to be charged or replaced. The cause of abnormal battery discharge, overcharging or early battery failure must be diagnosed and corrected before a battery is replaced and before a vehicle is returned to service. The service information for these systems has been separated within this service manual to make it easier to locate the specific information you are seeking. However, when attempting to diagnose any of these systems, it is important that you keep their interdependency in mind.

The diagnostic procedures used for the battery, starting, and charging systems include the most basic conventional diagnostic methods, to the more sophisticated On-Board Diagnostics (OBD) built into the Powertrain Control Module (PCM). Use of an induction-type milliampere ammeter, a volt/ohmmeter, a battery charger, a carbon pile rheostat (load tester) and a 12-volt test lamp may be required. All OBD-sensed systems are monitored by the PCM. Each monitored circuit is assigned a Diagnostic Trouble Code (DTC). The PCM will store a DTC in electronic memory for any failure it detects. Refer to Charging System for the proper charging system onboard diagnostic test procedures.

BATTERY SYSTEM (Continued)

BATTERY SYSTEM DIAGNOSIS		
CONDITION	POSSIBLE CAUSES	CORRECTION
THE BATTERY SEEMS WEAK OR DEAD WHEN ATTEMPTING TO START THE ENGINE.	1. The battery has an incorrect size or rating for this vehicle.	1. Refer to Battery Specifications for the proper size and rating. Replace an incorrect battery, as required.
	2. The battery is physically damaged.	2. Inspect the battery for loose terminal posts or a cracked and leaking case. Replace the damaged battery, as required.
	3. The battery terminal connections are loose or corroded.	3. Refer to Battery Cable for the proper cable diagnosis and testing procedures. Clean and tighten the battery terminal connections, as required.
	4. The battery is discharged.	4. Determine the battery state-of-charge. Refer to Standard Procedures for the proper test procedures. Charge the faulty battery, as required.
	5. The electrical system ignition-off draw is excessive.	5. Refer to Standard Procedures for the proper test procedures. Repair the faulty electrical system, as required.
	6. The battery is faulty.	6. Determine the battery cranking capacity. Refer to Standard Procedures for the test procedures. Replace the faulty battery, as required.
	7. The starting system is faulty.	7. Determine if the starting system is performing to specifications. Refer to Starting System for the proper starting system diagnosis and testing procedures. Repair the faulty starting system, as required.
	8. The charging system is faulty.	8. Determine if the charging system is performing to specifications. Refer to Charging System for the proper charging system diagnosis and testing procedures. Repair the faulty charging system, as required.

BATTERY SYSTEM (Continued)

BATTERY SYSTEM DIAGNOSIS		
CONDITION	POSSIBLE CAUSES	CORRECTION
THE BATTERY STATE OF CHARGE CANNOT BE MAINTAINED.	1. The battery has an incorrect size or rating for this vehicle.	1. Refer to Battery Specifications for the proper specifications. Replace an incorrect battery, as required.
	2. The battery terminal connections are loose or corroded.	2. Refer to Battery Cable for the proper cable diagnosis and testing procedures. Clean and tighten the battery terminal connections, as required.
	3. The generator drive belt is slipping.	3. Refer to Cooling System for the proper accessory drive belt diagnosis and testing procedures. Replace or adjust the faulty generator drive belt, as required.
	4. The electrical system ignition-off draw is excessive.	4. Refer to Standard Procedures for the proper test procedures. Repair the faulty electrical system, as required.
	5. The battery is faulty.	5. Determine the battery cranking capacity. Refer to Standard Procedures for the proper test procedures. Replace the faulty battery, as required.
	6. The starting system is faulty.	6. Determine if the starting system is performing to specifications. Refer to Starting System for the proper starting system diagnosis and testing procedures. Repair the faulty starting system, as required.
	7. The charging system is faulty.	7. Determine if the charging system is performing to specifications. Refer to Charging System for the proper charging system diagnosis and testing procedures. Repair the faulty charging system, as required.
	8. Electrical loads exceed the output of the charging system.	8. Inspect the vehicle for aftermarket electrical equipment which might cause excessive electrical loads.
	9. Slow driving or prolonged idling with high-amperage draw systems in use.	9. Advise the vehicle operator, as required.
THE BATTERY WILL NOT ACCEPT A CHARGE.	1. The battery is faulty.	1. Refer to Standard Procedures for the proper battery charging procedures. Charge or replace the faulty battery, as required.

ABNORMAL BATTERY DISCHARGING

Any of the following conditions can result in abnormal battery discharging:

- Corroded or loose battery posts and terminal clamps.
- A loose or worn generator drive belt.
- Electrical loads that exceed the output of the charging system. This can be due to equipment installed after manufacture, or repeated short trip use.
- Slow driving speeds (heavy traffic conditions) or prolonged idling, with high-amperage draw systems in use.
- A faulty circuit or component causing excessive ignition-off draw.
- A faulty or incorrect charging system component. Refer to Charging System for the proper charging system diagnosis and testing procedures.

BATTERY SYSTEM (Continued)

- A faulty or incorrect starting system component. Refer to Starting System for the proper starting system diagnosis and testing procedures.
- A faulty or incorrect battery. Refer to Standard Procedures for the proper battery diagnosis and testing procedures. Refer to Battery System Specifications for the proper specifications.

CLEANING

The following information details the recommended cleaning procedures for the battery and related components. In addition to the maintenance schedules found in this service manual and the owner's manual, it is recommended that these procedures be performed any time the battery or related components must be removed for vehicle service.

(1) Clean the battery cable terminal clamps of all corrosion. Remove any corrosion using a wire brush or a post and terminal cleaning tool, and a sodium bicarbonate (baking soda) and warm water cleaning solution (Fig. 1).

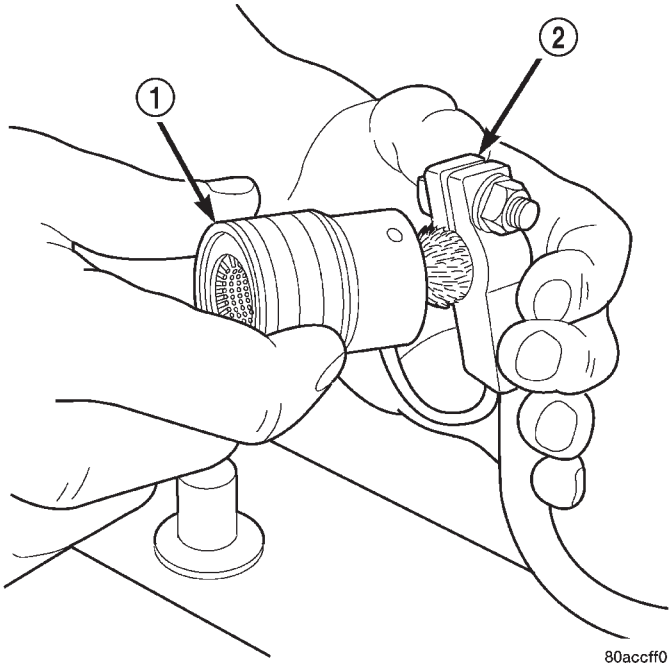

Fig. 1 Clean Battery Cable Terminal Clamp - Typical

1 - TERMINAL BRUSH
2 - BATTERY CABLE

(2) Clean the battery tray and battery holddown hardware of all corrosion. Remove any corrosion using a wire brush and a sodium bicarbonate (baking soda) and warm water cleaning solution. Paint any exposed bare metal.

(3) If the removed battery is to be reinstalled, clean the outside of the battery case and the top cover with a sodium bicarbonate (baking soda) and warm water cleaning solution using a stiff bristle parts cleaning brush to remove any acid film (Fig. 2). Rinse the battery with clean water. Ensure that the cleaning solution does not enter the battery cells through the vent holes. If the battery is being replaced, refer to Battery Specifications for the factory-installed battery specifications. Confirm that the replacement battery is the correct size and has the correct ratings for the vehicle.

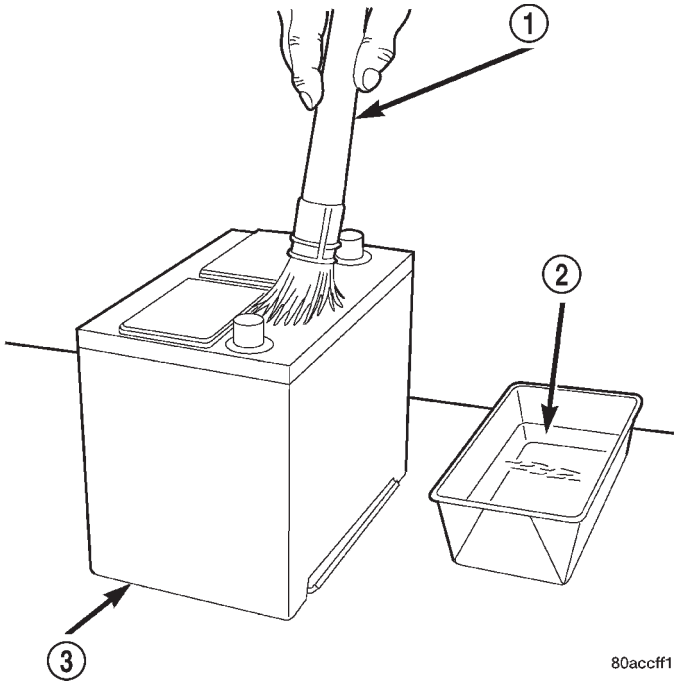

Fig. 2 Clean Battery - Typical

1 - CLEANING BRUSH
2 - WARM WATER AND BAKING SODA SOLUTION
3 - BATTERY

(4) Clean the battery thermal guard with a sodium bicarbonate (baking soda) and warm water cleaning solution using a stiff bristle parts cleaning brush to remove any acid film.

(5) Clean any corrosion from the battery terminal posts with a wire brush or a post and terminal cleaner, and a sodium bicarbonate (baking soda) and warm water cleaning solution (Fig. 3).

INSPECTION

The following information details the recommended inspection procedures for the battery and related components. In addition to the maintenance schedules found in this service manual and the owner's manual, it is recommended that these procedures be performed any time the battery or related components must be removed for vehicle service.

(1) Inspect the battery cable terminal clamps for damage. Replace any battery cable that has a damaged or deformed terminal clamp.

BATTERY SYSTEM (Continued)

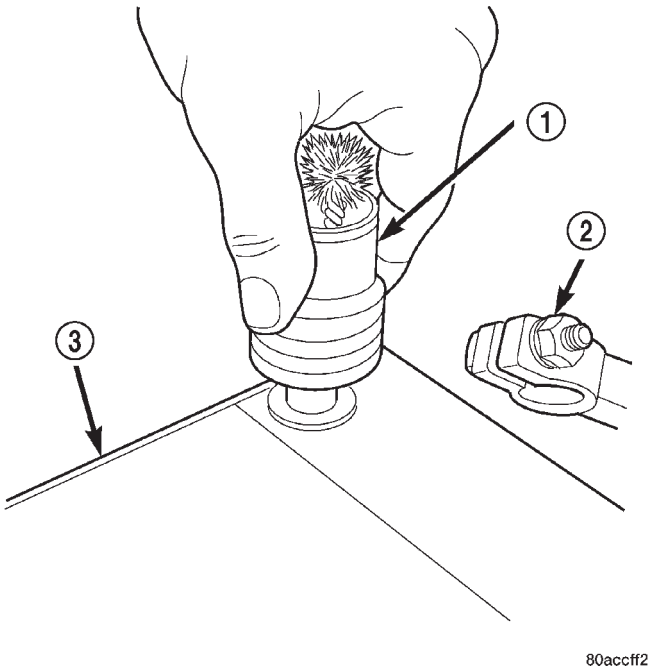

Fig. 3 Clean Battery Terminal Post - Typical

1 - TERMINAL BRUSH
2 - BATTERY CABLE
3 - BATTERY

(2) Inspect the battery tray and battery holddown hardware for damage. Replace any damaged parts.

(3) Slide the thermal guard off of the battery case. Inspect the battery case for cracks or other damage that could result in electrolyte leaks. Also, check the battery terminal posts for looseness. Batteries with damaged cases or loose terminal posts must be replaced.

(4) Inspect the battery thermal guard for tears, cracks, deformation or other damage. Replace any battery thermal guard that has been damaged.

(5) Inspect the electrolyte level in the battery. Use a putty knife or another suitable wide flat-bladed tool to pry the cell caps off (Fig. 4). **DO NOT USE A SCREWDRIVER.** Add distilled water to each battery cell until the liquid reaches the bottom of the vent well or one centimeter above the battery plates. **DO NOT OVERFILL THE BATTERY CELLS.**

(6) Inspect the battery built-in test indicator sight glass for an indication of the battery condition. If the battery is discharged, charge as required. Refer to Standard Procedures for the proper battery built-in indicator test procedures. Also refer to Standard Procedures for the proper battery charging procedures.

SPECIFICATIONS

The battery Group Size number, the Cold Cranking Amperage (CCA) rating, and the Reserve Capacity

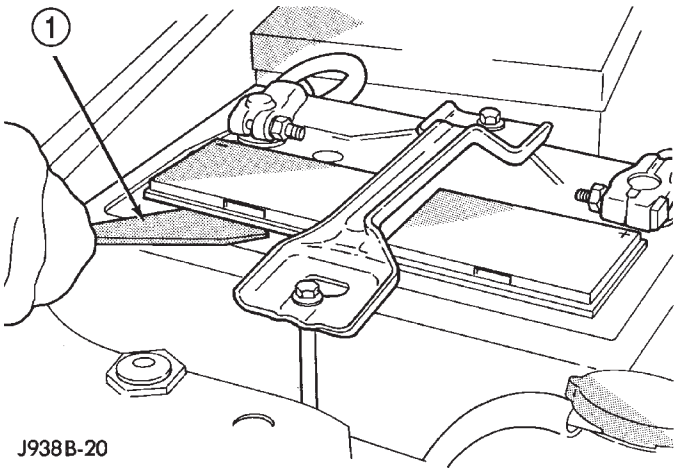

Fig. 4 Removing Battery Cell Caps - Typical

1 - PUTTY KNIFE

(RC) rating or Ampere-Hours (AH) rating can be found on the original equipment battery label. Be certain that a replacement battery has the correct Group Size number, as well as CCA, and RC or AH ratings that equal or exceed the original equipment specification for the vehicle being serviced. Battery sizes and ratings are discussed in more detail below.

- **Group Size** - The outside dimensions and terminal placement of the battery conform to standards established by the Battery Council International (BCI). Each battery is assigned a BCI Group Size number to help identify a correctly-sized replacement.
- **Cold Cranking Amperage** - The Cold Cranking Amperage (CCA) rating specifies how much current (in amperes) the battery can deliver for thirty seconds at -18° C (0° F). Terminal voltage must not fall below 7.2 volts during or after the thirty second discharge period. The CCA required is generally higher as engine displacement increases, depending also upon the starter current draw requirements.
- **Reserve Capacity** - The Reserve Capacity (RC) rating specifies the time (in minutes) it takes for battery terminal voltage to fall below 10.5 volts, at a discharge rate of 25 amperes. RC is determined with the battery fully-charged at 26.7° C (80° F). This rating estimates how long the battery might last after a charging system failure, under minimum electrical load.
- **Ampere-Hours** - The Ampere-Hours (AH) rating specifies the current (in amperes) that a battery can deliver steadily for twenty hours, with the voltage in the battery not falling below 10.5 volts. This rating is also sometimes identified as the twenty-hour discharge rating.

BATTERY SYSTEM (Continued)

BATTERY CLASSIFICATIONS & RATINGS					
Part Number	BCI Group Size Classification	Cold Cranking Amperage	Reserve Capacity	Ampere - Hours	Load Test Amperage
56041113	65	625	120 Minutes	69	300

BATTERY

DESCRIPTION

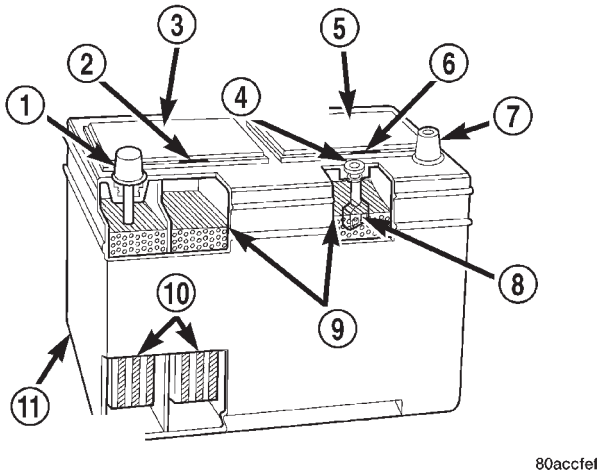

Fig. 5 Low-Maintenance Battery - Typical

A large capacity, low-maintenance storage battery (Fig. 5) is standard factory-installed equipment on this model. Male post type terminals made of a soft lead material protrude from the top of the molded plastic battery case to provide the means for connecting the battery to the vehicle electrical system. The battery positive terminal post is visibly larger in diameter than the negative terminal post, for easy identification. The letters **POS** and **NEG** are also molded into the top of the battery case adjacent to their respective positive and negative terminal posts for additional identification confirmation. Refer to **Battery Cables** in the index of this service manual for the location of more information on the battery cables that connect the battery to the vehicle electrical system.

This battery is designed to provide a safe, efficient and reliable means of storing electrical energy in a chemical form. This means of energy storage allows the battery to produce the electrical energy required to operate the engine starting system, as well as to operate many of the other vehicle accessory systems for limited durations while the engine and/or the charging system are not operating. The battery is made up of six individual cells that are connected in series. Each cell contains positively charged plate groups that are connected with lead straps to the positive terminal post, and negatively charged plate groups that are connected with lead straps to the negative terminal post. Each plate consists of a stiff mesh framework or grid coated with lead dioxide (positive plate) or sponge lead (negative plate). Insulators or plate separators made of a non-conductive material are inserted between the positive and negative plates to prevent them from contacting or shorting against one another. These dissimilar metal plates are submerged in a sulfuric acid and water solution called an electrolyte.

Some factory-installed batteries have a built-in test indicator (hydrometer). The color visible in the sight glass of the indicator will reveal the battery condition. For more information on the use of the built-in test indicator, refer to **Standard Procedures The factory-installed low-maintenance battery has removable battery cell caps.** Distilled water can be added to this battery. The battery is not sealed and has vent holes in the cell caps. The chemical composition of the metal coated plates within the low-maintenance battery reduces battery gassing and water loss, at normal charge and discharge rates. Therefore, the battery should not require additional water in normal service. If the electrolyte level in this battery does become low, distilled water must be added. However, rapid loss of electrolyte can be caused by an overcharging condition. Be certain to diagnose the charging system after replenishing the water in the battery for a low electrolyte condition and before returning the vehicle to service. Refer to **Charging System** for additional information.

For battery maintenance schedules and jump starting procedures, see the owner's manual in the vehicle glove box. Optionally, refer to **Maintenance Schedules** and **Jump Starting, Towing and Hoisting** in the index of this service manual for the location of the recommended battery maintenance schedules and the proper battery jump starting procedures. While battery charging can be considered a maintenance procedure, the battery charging procedures and information are located in the service procedures section of this service manual. This was done because the battery must be fully-charged before any battery diagnosis or testing procedures can be performed. Refer to **Standard Procedures** in the index of this service manual for the location of the proper battery charging procedures.

The battery Group Size number, the Cold Cranking Amperage (CCA) rating, and the Reserve Capacity (RC) rating or Ampere-Hours (AH) rating can be found on the original equipment battery label. Be

BATTERY (Continued)

certain that a replacement battery has the correct Group Size number, as well as CCA, and RC or AH ratings that equal or exceed the original equipment specification for the vehicle being serviced. Refer to **Battery Specifications** in this group for the location of the proper factory-installed battery specifications. Battery sizes and ratings are discussed in more detail below.

Group Size

- The outside dimensions and terminal placement of the battery conform to standards established by the Battery Council International (BCI). Each battery is assigned a BCI Group Size number to help identify a correctly-sized replacement.

Cold Cranking Amperage

- The Cold Cranking Amperage (CCA) rating specifies how much current (in amperes) the battery can deliver for thirty seconds at -18° C (0° F). Terminal voltage must not fall below 7.2 volts during or after the thirty second discharge period. The CCA required is generally higher as engine displacement increases, depending also upon the starter current draw requirements.

Reserve Capacity

- The Reserve Capacity (RC) rating specifies the time (in minutes) it takes for battery terminal voltage to fall below 10.5 volts, at a discharge rate of 25 amperes. RC is determined with the battery fully-charged at 26.7° C (80° F). This rating estimates how long the battery might last after a charging system failure, under minimum electrical load.

Ampere-Hours

- The Ampere-Hours (AH) rating specifies the current (in amperes) that a battery can deliver steadily for twenty hours, with the voltage in the battery not falling below 10.5 volts. This rating is also sometimes identified as the twenty-hour discharge rating.

OPERATION

The battery is designed to store electrical energy in a chemical form. When an electrical load is applied to the terminals of the battery, an electrochemical reaction occurs. This reaction causes the battery to discharge electrical current from its terminals. As the battery discharges, a gradual chemical change takes place within each cell. The sulfuric acid in the electrolyte combines with the plate materials, causing both plates to slowly change to lead sulfate. At the same time, oxygen from the positive plate material combines with hydrogen from the sulfuric acid, causing the electrolyte to become mainly water. The chemical changes within the battery are caused by the movement of excess or free electrons between the positive and negative plate groups. This movement of electrons produces a flow of electrical current through the load device attached to the battery terminals.

As the plate materials become more similar chemically, and the electrolyte becomes less acid, the voltage potential of each cell is reduced. However, by charging the battery with a voltage higher than that of the battery itself, the battery discharging process is reversed. Charging the battery gradually changes the sulfated lead plates back into sponge lead and lead dioxide, and the water back into sulfuric acid. This action restores the difference in the electron charges deposited on the plates, and the voltage potential of the battery cells. For a battery to remain useful, it must be able to produce high-amperage current over an extended period. A battery must also be able to accept a charge, so that its voltage potential may be restored.

The battery is vented to release excess hydrogen gas that is created when the battery is being charged or discharged. However, even with these vents, hydrogen gas can collect in or around the battery. If hydrogen gas is exposed to flame or sparks, it may ignite. If the electrolyte level is low, the battery may arc internally and explode. If the battery is equipped with removable cell caps, add distilled water whenever the electrolyte level is below the top of the plates. If the battery cell caps cannot be removed, the battery must be replaced if the electrolyte level becomes low.

DIAGNOSIS AND TESTING - BATTERY

The battery must be completely charged and the top, posts and terminal clamps should be properly cleaned and inspected before diagnostic procedures are performed. Refer to Battery System Cleaning for the proper cleaning procedures, and Battery System Inspection for the proper battery inspection procedures. Refer to Standard Procedures for the proper battery charging procedures.

WARNING: IF THE BATTERY SHOWS SIGNS OF FREEZING, LEAKING OR LOOSE POSTS, DO NOT TEST, ASSIST-BOOST, OR CHARGE. THE BATTERY MAY ARC INTERNALLY AND EXPLODE. PERSONAL INJURY AND/OR VEHICLE DAMAGE MAY RESULT.

WARNING: EXPLOSIVE HYDROGEN GAS FORMS IN AND AROUND THE BATTERY. DO NOT SMOKE, USE FLAME, OR CREATE SPARKS NEAR THE BATTERY. PERSONAL INJURY AND/OR VEHICLE DAMAGE MAY RESULT.

BATTERY (Continued)

WARNING: THE BATTERY CONTAINS SULFURIC ACID, WHICH IS POISONOUS AND CAUSTIC. AVOID CONTACT WITH THE SKIN, EYES, OR CLOTHING. IN THE EVENT OF CONTACT, FLUSH WITH WATER AND CALL A PHYSICIAN IMMEDIATELY. KEEP OUT OF THE REACH OF CHILDREN.

WARNING: IF THE BATTERY IS EQUIPPED WITH REMOVABLE CELL CAPS, BE CERTAIN THAT EACH OF THE CELL CAPS ARE IN PLACE AND TIGHT BEFORE THE BATTERY IS RETURNED TO SERVICE. PERSONAL INJURY AND/OR VEHICLE DAMAGE MAY RESULT FROM LOOSE OR MISSING CELL CAPS.

The condition of a battery is determined by two criteria:

- **State-Of-Charge** - This can be determined by checking the specific gravity of the battery electrolyte (built-in indicator test or hydrometer test), or by checking the battery voltage (open-circuit voltage test).
- **Cranking Capacity** - This can be determined by performing a battery load test, which measures the ability of the battery to supply high-amperage current.

First, determine the battery state-of-charge. This can be done in one of three ways. If the battery has a built-in test indicator, perform the built-in indicator test to determine the state-of-charge. If the battery has no built-in test indicator but does have removable cell caps, perform the hydrometer test to determine the state-of-charge. If the battery cell caps are not removable, or a hydrometer is not available, perform the open-circuit voltage test to determine the state-of-charge.

Second, determine the battery cranking capacity by performing a load test. The battery must be charged before proceeding with a load test if:

- The battery built-in test indicator has a black or dark color visible.
- The temperature corrected specific gravity of the battery electrolyte is less than 1.235.
- The battery open-circuit voltage is less than 12.4 volts.

A battery that will not accept a charge is faulty, and must be replaced. Further testing is not required. A fully-charged battery must be load tested to determine its cranking capacity. A battery that is fully-charged, but does not pass the load test, is faulty and must be replaced.

NOTE: Completely discharged batteries may take several hours to accept a charge. Refer to Standard Procedures for the proper battery charging procedures.

A battery is fully-charged when:

- All battery cells are gassing freely during charging.
- A green color is visible in the sight glass of the battery built-in test indicator.
- Three corrected specific gravity tests, taken at one-hour intervals, indicate no increase in the specific gravity of the battery electrolyte.
- Open-circuit voltage of the battery is 12.4 volts or greater.

STANDARD PROCEDURE - CHECKING BATTERY ELECTROLYTE LEVEL

The following procedure can be used to check the electrolyte level in the battery.

(1) Remove the battery caps (Fig. 6).

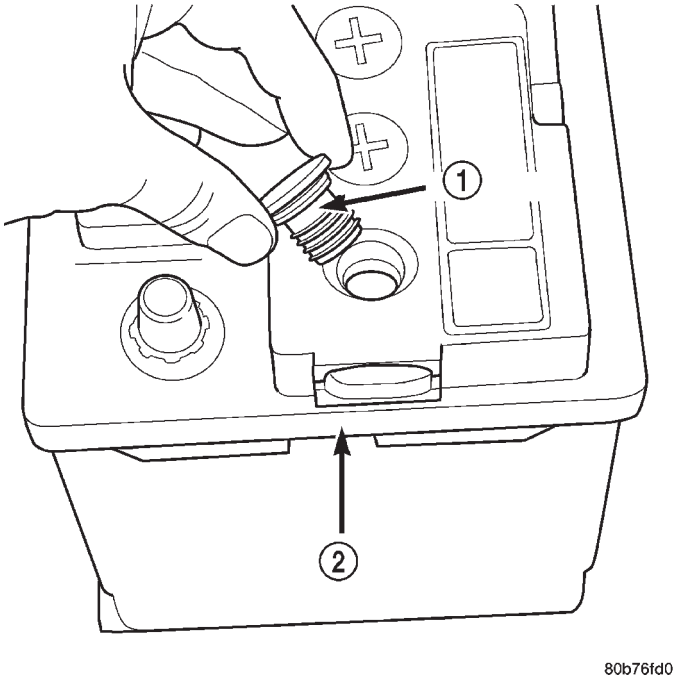

Fig. 6 Battery Caps - Export Battery

1 - BATTERY CAP
2 - BATTERY

(2) Look through the battery cap holes to determine the level of the electrolyte in the battery (Fig. 7). The electrolyte should be approximately 1 centimeter above the battery plates or until the hook inside the battery cap holes is covered.

(3) Add only distilled water until the electrolyte level is approx. one centimeter above the plates.

STANDARD PROCEDURE - BATTERY CHARGING

Battery charging is the means by which the battery can be restored to its full voltage potential. A battery is fully-charged when:

BATTERY (Continued)

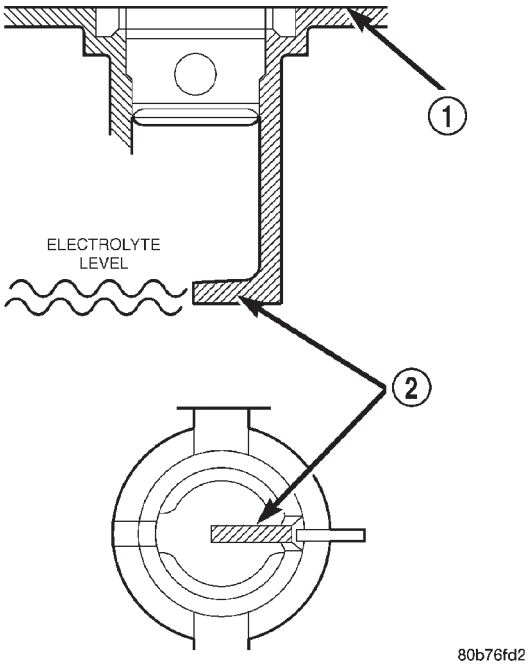

Fig. 7 Hook Inside Battery Cap Holes - Export Battery

1 - BATTERY SURFACE COVER
2 - HOOK

- All of the battery cells are gassing freely during battery charging.
- A green color is visible in the sight glass of the battery built-in test indicator.
- Three hydrometer tests, taken at one-hour intervals, indicate no increase in the temperature-corrected specific gravity of the battery electrolyte.
- Open-circuit voltage of the battery is 12.4 volts or above.

WARNING: NEVER EXCEED TWENTY AMPERES WHEN CHARGING A COLD (-1° C [30° F] OR LOWER) BATTERY. THE BATTERY MAY ARC INTERNALLY AND EXPLODE. PERSONAL INJURY AND/OR VEHICLE DAMAGE MAY RESULT.

WARNING: IF THE BATTERY SHOWS SIGNS OF FREEZING, LEAKING, LOOSE POSTS, DO NOT TEST, ASSIST-BOOST, OR CHARGE. THE BATTERY MAY ARC INTERNALLY AND EXPLODE. PERSONAL INJURY AND/OR VEHICLE DAMAGE MAY RESULT.

WARNING: EXPLOSIVE HYDROGEN GAS FORMS IN AND AROUND THE BATTERY. DO NOT SMOKE, USE FLAME, OR CREATE SPARKS NEAR THE BATTERY. PERSONAL INJURY AND/OR VEHICLE DAMAGE MAY RESULT.

WARNING: THE BATTERY CONTAINS SULFURIC ACID, WHICH IS POISONOUS AND CAUSTIC. AVOID CONTACT WITH THE SKIN, EYES, OR CLOTHING. IN THE EVENT OF CONTACT, FLUSH WITH WATER AND CALL A PHYSICIAN IMMEDIATELY. KEEP OUT OF THE REACH OF CHILDREN.

WARNING: IF THE BATTERY IS EQUIPPED WITH REMOVABLE CELL CAPS, BE CERTAIN THAT EACH OF THE CELL CAPS IS IN PLACE AND TIGHT BEFORE THE BATTERY IS RETURNED TO SERVICE. PERSONAL INJURY AND/OR VEHICLE DAMAGE MAY RESULT FROM LOOSE OR MISSING CELL CAPS.

CAUTION: Always disconnect and isolate the battery negative cable before charging a battery. Do not exceed sixteen volts while charging a battery. Damage to the vehicle electrical system components may result.

CAUTION: Battery electrolyte will bubble inside the battery case during normal battery charging. Electrolyte boiling or being discharged from the battery vents indicates a battery overcharging condition. Immediately reduce the charging rate or turn off the charger to evaluate the battery condition. Damage to the battery may result from overcharging.

CAUTION: The battery should not be hot to the touch. If the battery feels hot to the touch, turn off the charger and let the battery cool before continuing the charging operation. Damage to the battery may result.

Some battery chargers are equipped with polarity-sensing circuitry. This circuitry protects the battery charger and the battery from being damaged if they are improperly connected. If the battery state-of-charge is too low for the polarity-sensing circuitry to detect, the battery charger will not operate. This makes it appear that the battery will not accept charging current. See the instructions provided by the manufacturer of the battery charger for details on how to bypass the polarity-sensing circuitry.

After the battery has been charged to 12.4 volts or greater, perform a load test to determine the battery cranking capacity. Refer to Standard Procedures for the proper battery load test procedures. If the battery will endure a load test, return the battery to service. If the battery will not endure a load test, it is faulty and must be replaced.

BATTERY (Continued)

Clean and inspect the battery hold downs, tray, terminals, posts, and top before completing battery service. Refer to Battery System Cleaning for the proper battery system cleaning procedures, and Battery System Inspection for the proper battery system inspection procedures.

CHARGING A COMPLETELY DISCHARGED BATTERY

The following procedure should be used to recharge a completely discharged battery. Unless this procedure is properly followed, a good battery may be needlessly replaced.

(1) Measure the voltage at the battery posts with a voltmeter, accurate to 1/10 (0.10) volt (Fig. 8). If the reading is below ten volts, the battery charging current will be low. It could take some time before the battery accepts a current greater than a few milliamperes. Such low current may not be detectable on the ammeters built into many battery chargers.

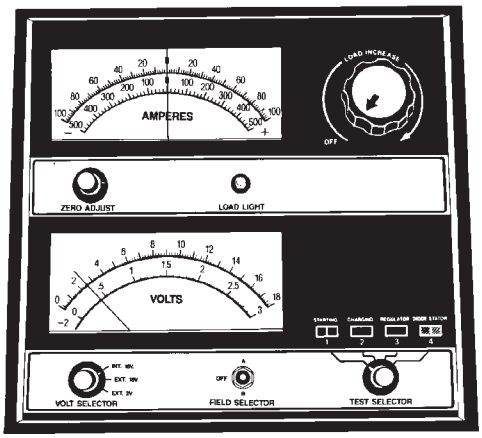

Fig. 8 Voltmeter - Typical

(2) Disconnect and isolate the battery negative cable. Connect the battery charger leads. Some battery chargers are equipped with polarity-sensing circuitry. This circuitry protects the battery charger and the battery from being damaged if they are improperly connected. If the battery state-of-charge is too low for the polarity-sensing circuitry to detect, the battery charger will not operate. This makes it appear that the battery will not accept charging current. See the instructions provided by the manufacturer of the battery charger for details on how to bypass the polarity-sensing circuitry.

(3) Battery chargers vary in the amount of voltage and current they provide. The amount of time required for a battery to accept measurable charging current at various voltages is shown in the Charge Rate Table. If the charging current is still not measurable at the end of the charging time, the battery is faulty and must be replaced. If the charging current is measurable during the charging time, the battery may be good and the charging should be completed in the normal manner.

CHARGE RATE TABLE	
Voltage	Hours
16.0 volts maximum	up to 4 hours
14.0 to 15.9 volts	up to 8 hours
13.9 volts or less	up to 16 hours

CHARGING TIME REQUIRED

The time required to charge a battery will vary, depending upon the following factors:

- **Battery Capacity** - A completely discharged heavy-duty battery requires twice the charging time of a small capacity battery.
- **Temperature** - A longer time will be needed to charge a battery at -18° C (0° F) than at 27° C (80° F). When a fast battery charger is connected to a cold battery, the current accepted by the battery will be very low at first. As the battery warms, it will accept a higher charging current rate (amperage).
- **Charger Capacity** - A battery charger that supplies only five amperes will require a longer charging time. A battery charger that supplies twenty amperes or more will require a shorter charging time.
- **State-Of-Charge** - A completely discharged battery requires more charging time than a partially discharged battery. Electrolyte is nearly pure water in a completely discharged battery. At first, the charging current (amperage) will be low. As the battery charges, the specific gravity of the electrolyte will gradually rise.

The Battery Charging Time Table gives an indication of the time required to charge a typical battery at room temperature based upon the battery state-of-charge and the charger capacity.

BATTERY CHARGING TIME TABLE			
Charging Amperage	5 Amps	10 Amps	20 Amps
Open Circuit Voltage	Hours Charging @ 21° C (70° F)		
12.25 to 12.49	6 hours	3 hours	1.5 hours
12.00 to 12.24	10 hours	5 hours	2.5 hours
10.00 to 11.99	14 hours	7 hours	3.5 hours
Below 10.00	18 hours	9 hours	4.5 hours

BATTERY (Continued)

STANDARD PROCEDURE - BUILT-IN INDICATOR TEST

An indicator (hydrometer) built into the top of the battery case provides visual information for battery testing (Fig. 9). Like a hydrometer, the built-in indicator measures the specific gravity of the battery electrolyte. The specific gravity of the electrolyte reveals the battery state-of-charge; however, it will not reveal the cranking capacity of the battery. A load test must be performed to determine the battery cranking capacity. Refer to Standard Procedures for the proper battery load test procedures.

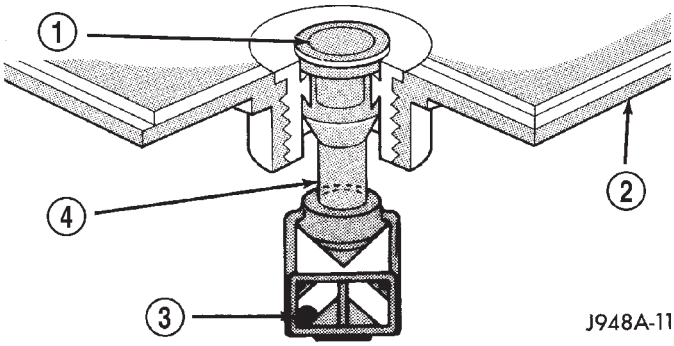

Fig. 9 Built-In Indicator

1 - SIGHT GLASS
2 - BATTERY TOP
3 - GREEN BALL
4 - PLASTIC ROD

WARNING: IF THE BATTERY SHOWS SIGNS OF FREEZING, LEAKING OR LOOSE POSTS, DO NOT TEST, ASSIST-BOOST, OR CHARGE. THE BATTERY MAY ARC INTERNALLY AND EXPLODE. PERSONAL INJURY AND/OR VEHICLE DAMAGE MAY RESULT.

WARNING: EXPLOSIVE HYDROGEN GAS FORMS IN AND AROUND THE BATTERY. DO NOT SMOKE, USE FLAME, OR CREATE SPARKS NEAR THE BATTERY. PERSONAL INJURY AND/OR VEHICLE DAMAGE MAY RESULT.

WARNING: THE BATTERY CONTAINS SULFURIC ACID, WHICH IS POISONOUS AND CAUSTIC. AVOID CONTACT WITH THE SKIN, EYES, OR CLOTHING. IN THE EVENT OF CONTACT, FLUSH WITH WATER AND CALL A PHYSICIAN IMMEDIATELY. KEEP OUT OF THE REACH OF CHILDREN.

WARNING: IF THE BATTERY IS EQUIPPED WITH REMOVABLE CELL CAPS, BE CERTAIN THAT EACH OF THE CELL CAPS IS IN PLACE AND TIGHT BEFORE THE BATTERY IS RETURNED TO SERVICE. PERSONAL INJURY AND/OR VEHICLE DAMAGE MAY RESULT FROM LOOSE OR MISSING CELL CAPS.

Before testing, visually inspect the battery for any damage (a cracked case or cover, loose posts, etc.) that would cause the battery to be faulty. In order to obtain correct indications from the built-in indicator, it is important that the battery be level and have a clean sight glass. Additional light may be required to view the indicator. **Do not use open flame as a source of additional light.**

To read the built-in indicator, look into the sight glass and note the color of the indication (Fig. 10). The battery condition that each color indicates is described in the following list:

- **Green** - Indicates 75% to 100% battery state-of-charge. The battery is adequately charged for further testing or return to service. If the starter will not crank for a minimum of fifteen seconds with a fully-charged battery, the battery must be load tested. Refer to Standard Procedures for the proper battery load test procedures.
- **Black or Dark** - Indicates 0% to 75% battery state-of-charge. The battery is inadequately charged and must be charged until a green indication is visible in the sight glass (12.4 volts or more), before the battery is tested further or returned to service. Refer to Standard Procedures for the proper battery charging procedures. Also refer to Diagnosis and Testing for more information on the possible causes of the discharged battery condition.
- **Clear or Bright** - Indicates a low battery electrolyte level. The electrolyte level in the battery is below the built-in indicator. A maintenance-free battery with non-removable cell caps must be replaced if the electrolyte level is low. Water must be added to a low-maintenance battery with removable cell caps before it is charged. Refer to Standard Procedures for the proper battery filling procedures. A low electrolyte level may be caused by an overcharging condition. Refer to Charging System for the proper charging system diagnosis and testing procedures.

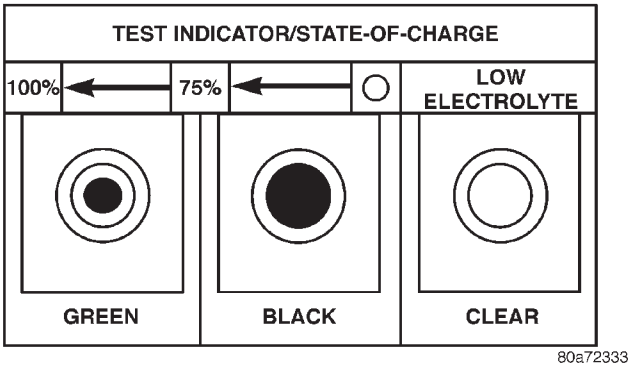

Fig. 10 Built-In Indicator Sight Glass Chart

BATTERY (Continued)

STANDARD PROCEDURE - HYDROMETER TEST

The hydrometer test reveals the battery state-of-charge by measuring the specific gravity of the electrolyte. **This test cannot be performed on maintenance-free batteries with non-removable cell caps.** If the battery has non-removable cell caps, refer to Diagnosis and Testing for alternate methods of determining the battery state-of-charge.

Specific gravity is a comparison of the density of the battery electrolyte to the density of pure water. Pure water has a specific gravity of 1.000, and sulfuric acid has a specific gravity of 1.835. Sulfuric acid makes up approximately 35% of the battery electrolyte by weight, or 24% by volume. In a fully-charged battery the electrolyte will have a temperature-corrected specific gravity of 1.260 to 1.290. However, a specific gravity of 1.235 or above is satisfactory for the battery to be load tested and/or returned to service.

WARNING: IF THE BATTERY SHOWS SIGNS OF FREEZING, LEAKING OR LOOSE POSTS, DO NOT TEST, ASSIST-BOOST, OR CHARGE. THE BATTERY MAY ARC INTERNALLY AND EXPLODE. PERSONAL INJURY AND/OR VEHICLE DAMAGE MAY RESULT.

WARNING: EXPLOSIVE HYDROGEN GAS FORMS IN AND AROUND THE BATTERY. DO NOT SMOKE, USE FLAME, OR CREATE SPARKS NEAR THE BATTERY. PERSONAL INJURY AND/OR VEHICLE DAMAGE MAY RESULT.

WARNING: THE BATTERY CONTAINS SULFURIC ACID, WHICH IS POISONOUS AND CAUSTIC. AVOID CONTACT WITH THE SKIN, EYES, OR CLOTHING. IN THE EVENT OF CONTACT, FLUSH WITH WATER AND CALL A PHYSICIAN IMMEDIATELY. KEEP OUT OF THE REACH OF CHILDREN.

WARNING: IF THE BATTERY IS EQUIPPED WITH REMOVABLE CELL CAPS, BE CERTAIN THAT EACH OF THE CELL CAPS IS IN PLACE AND TIGHT BEFORE THE BATTERY IS RETURNED TO SERVICE. PERSONAL INJURY AND/OR VEHICLE DAMAGE MAY RESULT FROM LOOSE OR MISSING CELL CAPS.

Before testing, visually inspect the battery for any damage (a cracked case or cover, loose posts, etc.) that would cause the battery to be faulty. Then remove the battery cell caps and check the electrolyte level. Add distilled water if the electrolyte level is below the top of the battery plates. Refer to Battery System Cleaning for the proper battery inspection procedures.

See the instructions provided by the manufacturer of the hydrometer for recommendations on the correct use of the hydrometer that you are using. Remove only enough electrolyte from the battery cell so that the float is off the bottom of the hydrometer barrel with pressure on the bulb released. To read the hydrometer correctly, hold it with the top surface of the electrolyte at eye level (Fig. 11).

CAUTION: Exercise care when inserting the tip of the hydrometer into a battery cell to avoid damaging the plate separators. Damaged plate separators can cause early battery failure.

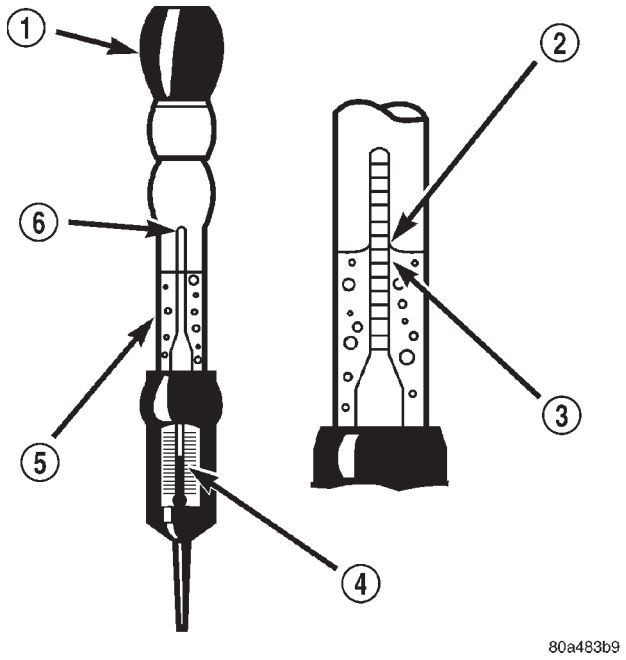

Fig. 11 Hydrometer - Typical

1 - BULB
2 - SURFACE COHESION
3 - SPECIFIC GRAVITY READING
4 - TEMPERATURE READING
5 - HYDROMETER BARREL
6 - FLOAT

Hydrometer floats are generally calibrated to indicate the specific gravity correctly only at 26.7° C (80° F). When testing the specific gravity at any other temperature, a correction factor is required. The correction factor is approximately a specific gravity value of 0.004, which may also be identified as four points of specific gravity. For each 5.5° C above 26.7° C (10° F above 80° F), add four points. For each 5.5° C below 26.7° C (10° F below 80° F), subtract four points. Always correct the specific gravity for temperature variation.

BATTERY (Continued)

EXAMPLE: A battery is tested at -12.2° C (10° F) and has a specific gravity of 1.240. Determine the actual specific gravity as follows:

(1) Determine the number of degrees above or below 26.7° C (80° F):**26.6° C - -12.2° C = 38.8° C (80° F - 10° F = 70° F)**

(2) Divide the result from Step 1 by 5.5° C (10° F):**38.8° C ÷ 5.5° C = 7 (70° F ÷ 10° F = 7)**

(3) Multiply the result from Step 2 by the temperature correction factor (0.004):**7 X 0.004 = 0.028**

(4) The temperature at testing was below 26.7° C (80° F); therefore, the temperature correction factor is subtracted:**1.240 - 0.028 = 1.212**

(5) The corrected specific gravity of the battery cell in this example is 1.212.

Test the specific gravity of the electrolyte in each battery cell. If the specific gravity of all cells is above 1.235, but the variation between cells is more than fifty points (0.050), the battery should be replaced. If the specific gravity of one or more cells is less than 1.235, charge the battery at a rate of approximately five amperes. Continue charging the battery until three consecutive specific gravity tests, taken at one-hour intervals, are constant. If the cell specific gravity variation is more than fifty points (0.050) at the end of the charge period, replace the battery.

When the specific gravity of all cells is above 1.235, and the cell variation is less than fifty points (0.050), the battery may be load tested to determine its cranking capacity. Refer to Standard Procedures for the proper battery load test procedures.

STANDARD PROCEDURE - OPEN-CIRCUIT VOLTAGE TEST

A battery open-circuit voltage (no load) test will show the state-of-charge of a battery. This test can be used in place of the hydrometer test when a hydrometer is not available, or for maintenance-free batteries with non-removable cell caps.

WARNING: IF THE BATTERY SHOWS SIGNS OF FREEZING, LEAKING OR LOOSE POSTS, DO NOT TEST, ASSIST-BOOST, OR CHARGE. THE BATTERY MAY ARC INTERNALLY AND EXPLODE. PERSONAL INJURY AND/OR VEHICLE DAMAGE MAY RESULT.

WARNING: EXPLOSIVE HYDROGEN GAS FORMS IN AND AROUND THE BATTERY. DO NOT SMOKE, USE FLAME, OR CREATE SPARKS NEAR THE BATTERY. PERSONAL INJURY AND/OR VEHICLE DAMAGE MAY RESULT.

WARNING: THE BATTERY CONTAINS SULFURIC ACID, WHICH IS POISONOUS AND CAUSTIC. AVOID CONTACT WITH THE SKIN, EYES, OR CLOTHING. IN THE EVENT OF CONTACT, FLUSH WITH WATER AND CALL A PHYSICIAN IMMEDIATELY. KEEP OUT OF THE REACH OF CHILDREN.

WARNING: IF THE BATTERY IS EQUIPPED WITH REMOVABLE CELL CAPS, BE CERTAIN THAT EACH OF THE CELL CAPS IS IN PLACE AND TIGHT BEFORE THE BATTERY IS RETURNED TO SERVICE. PERSONAL INJURY AND/OR VEHICLE DAMAGE MAY RESULT FROM LOOSE OR MISSING CELL CAPS.

Before proceeding with this test, completely charge the battery. Refer to Standard Procedures for the proper battery charging procedures.

(1) Before measuring the open-circuit voltage, the surface charge must be removed from the battery. Turn on the headlamps for fifteen seconds, then allow up to five minutes for the battery voltage to stabilize.

(2) Disconnect and isolate both battery cables, negative cable first.

(3) Using a voltmeter connected to the battery posts (see the instructions provided by the manufacturer of the voltmeter), measure the open-circuit voltage (Fig. 12).

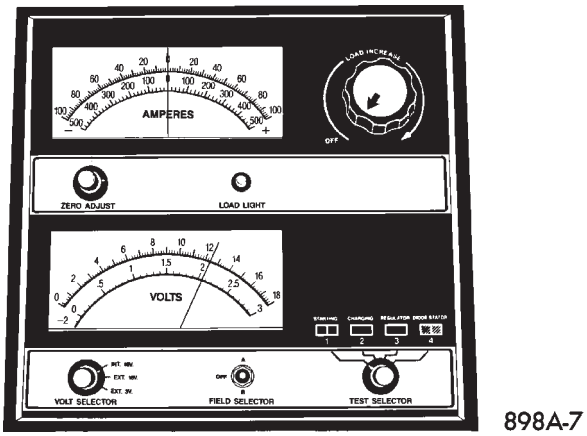

Fig. 12 Testing Open-Circuit Voltage - Typical

See the Open-Circuit Voltage Table. This voltage reading will indicate the battery state-of-charge, but will not reveal its cranking capacity. If a battery has an open-circuit voltage reading of 12.4 volts or greater, it may be load tested to reveal its cranking capacity. Refer to Standard Procedures for the proper battery load test procedures.

BATTERY (Continued)

OPEN CIRCUIT VOLTAGE TABLE	
Open Circuit Voltage	Charge Percentage
11.7 volts or less	0%
12.0 volts	25%
12.2 volts	50%
12.4 volts	75%
12.6 volts or more	100%

STANDARD PROCEDURE - LOAD TEST

A battery load test will verify the battery cranking capacity. The test is based on the Cold Cranking Amperage (CCA) rating of the battery. To determine the battery CCA rating, see the label affixed to the battery case or refer to Battery Specifications for the proper factory-installed specifications.

WARNING: IF THE BATTERY SHOWS SIGNS OF FREEZING, LEAKING OR LOOSE POSTS, DO NOT TEST, ASSIST-BOOST, OR CHARGE. THE BATTERY MAY ARC INTERNALLY AND EXPLODE. PERSONAL INJURY AND/OR VEHICLE DAMAGE MAY RESULT.

WARNING: EXPLOSIVE HYDROGEN GAS FORMS IN AND AROUND THE BATTERY. DO NOT SMOKE, USE FLAME, OR CREATE SPARKS NEAR THE BATTERY. PERSONAL INJURY AND/OR VEHICLE DAMAGE MAY RESULT.

WARNING: THE BATTERY CONTAINS SULFURIC ACID, WHICH IS POISONOUS AND CAUSTIC. AVOID CONTACT WITH THE SKIN, EYES, OR CLOTHING. IN THE EVENT OF CONTACT, FLUSH WITH WATER AND CALL A PHYSICIAN IMMEDIATELY. KEEP OUT OF THE REACH OF CHILDREN.

WARNING: IF THE BATTERY IS EQUIPPED WITH REMOVABLE CELL CAPS, BE CERTAIN THAT EACH OF THE CELL CAPS IS IN PLACE AND TIGHT BEFORE THE BATTERY IS RETURNED TO SERVICE. PERSONAL INJURY AND/OR VEHICLE DAMAGE MAY RESULT FROM LOOSE OR MISSING CELL CAPS.

Before proceeding with this test, completely charge the battery. Refer to Standard Procedures for the proper battery charging procedures.

(1) Disconnect and isolate both battery cables, negative cable first. The battery top and posts should be clean. Refer to Battery System Cleaning for the proper cleaning procedures.

(2) Connect a suitable volt-ammeter-load tester (Fig. 13) to the battery posts (Fig. 14). See the instructions provided by the manufacturer of the tester you are using. Check the open-circuit voltage (no load) of the battery. Refer to Standard Procedures for the proper battery open-circuit voltage test procedures. The battery open-circuit voltage must be 12.4 volts or greater.

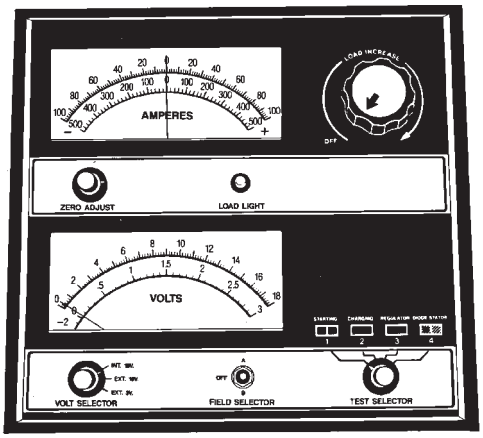

Fig. 13 Volt-Ammeter-Load Tester - Typical

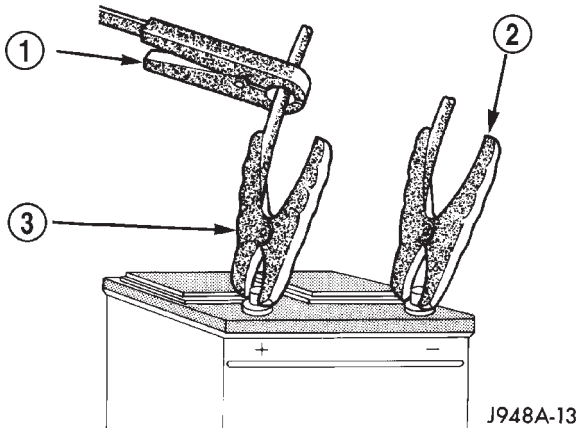

Fig. 14 Volt-Ammeter-Load

1 - INDUCTION AMMETER CLAMP
2 - NEGATIVE CLAMP
3 - POSITIVE CLAMP

(3) Rotate the load control knob (carbon pile rheostat) to apply a 300 ampere load to the battery for fifteen seconds, then return the control knob to the Off position (Fig. 15). This will remove the surface charge from the battery.

(4) Allow the battery to stabilize to open-circuit voltage. It may take up to five minutes for the battery voltage to stabilize.

(5) Rotate the load control knob to maintain a load equal to 50% of the CCA rating of the battery (Fig. 16). After fifteen seconds, record the loaded voltage reading, then return the load control knob to the Off position.

(6) The voltage drop will vary with the battery temperature at the time of the load test. The battery

BATTERY (Continued)

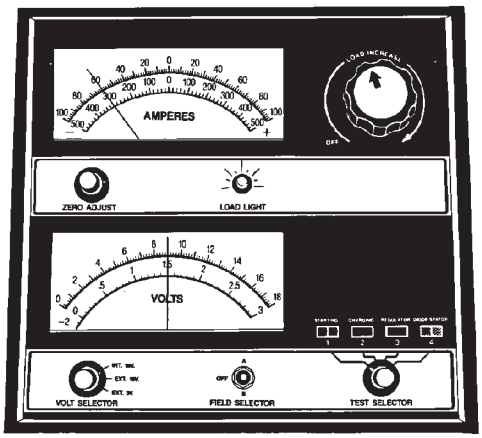

898A-10

Fig. 15 Remove Surface Charge from Battery

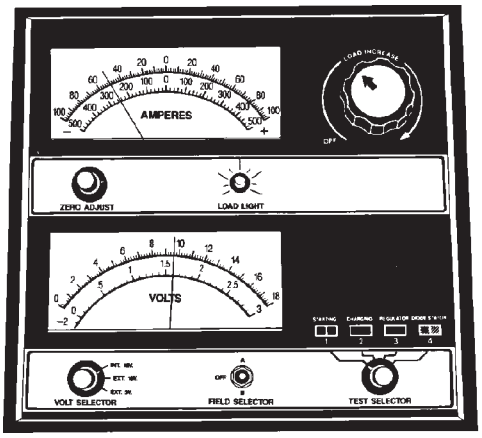

898A-11

Fig. 16 Load 50% CCA Rating - Note Voltage - Typical

temperature can be estimated by using the ambient temperature during the past several hours. If the battery has been charged, boosted, or loaded a few minutes prior to the test, the battery will be somewhat warmer. See the Load Test Temperature Table for the proper loaded voltage reading.

LOAD TEST TEMPERATURE TABLE		
Minimum Voltage	Temperature	
	°F	°C
9.6 volts	70° and above	21° and above
9.5 volts	60°	16°
9.4 volts	50°	10°
9.3 volts	40°	4°
9.1 volts	30°	-1°
8.9 volts	20°	-7°
8.7 volts	10°	-12°
8.5 volts	0°	-18°

(7) If the voltmeter reading falls below 9.6 volts, at a minimum battery temperature of 21° C (70° F), the battery is faulty and must be replaced.

STANDARD PROCEDURE - IGNITION-OFF DRAW TEST

The term Ignition-Off Draw (IOD) identifies a normal condition where power is being drained from the battery with the ignition switch in the Off position. A normal vehicle electrical system will draw from five to thirty-five milliamperes (0.005 to 0.035 ampere) with the ignition switch in the Off position, and all non-ignition controlled circuits in proper working order. Up to thirty-five milliamperes are needed to enable the memory functions for the Powertrain Control Module (PCM), digital clock, electronically tuned radio, and other modules which may vary with the vehicle equipment.

A vehicle that has not been operated for approximately twenty days, may discharge the battery to an inadequate level. When a vehicle will not be used for twenty days or more (stored), remove the IOD fuse from the Power Distribution Center (PDC). This will reduce battery discharging.

Excessive IOD can be caused by:

- Electrical items left on.
- Faulty or improperly adjusted switches.
- Faulty or shorted electronic modules and components.
- An internally shorted generator.
- Intermittent shorts in the wiring.

If the IOD is over thirty-five milliamperes, the problem must be found and corrected before replacing a battery. In most cases, the battery can be charged and returned to service after the excessive IOD condition has been corrected.

(1) Verify that all electrical accessories are off. Turn off all lamps, remove the ignition key, and close all doors. If the vehicle is equipped with an illuminated entry system or an electronically tuned radio, allow the electronic timer function of these systems to automatically shut off (time out). This may take up to three minutes. See the Electronic Module Ignition-Off Draw Table for more information.

BATTERY (Continued)

ELECTRONIC MODULE IGNITION-OFF DRAW (IOD) TABLE			
Module	Time Out? (If Yes, Interval And Wake-Up Input)	IOD	IOD After Time Out
Radio	No	1 to 3 milliamperes	N/A
Audio Power Amplifier	No	up to 1 milliampere	N/A
Body Control Module (BCM)	No	5.90 milliamperes (max.)	N/A
Powertrain Control Module (PCM)	No	0.95 milliampere	N/A
Transmission Control Module (TCM) 4.7L w/45RFE	YES (20 minutes, ignition on)	130 milliamperes	0.64 milliampere
ElectroMechanical Instrument Cluster (EMIC)	No	0.44 milliampere	N/A
Combination Flasher	No	0.08 milliampere	N/A

(2) Determine that the underhood lamp is operating properly, then disconnect the lamp wire harness connector or remove the lamp bulb.

(3) Disconnect the battery negative cable.

(4) Set an electronic digital multi-meter to its highest amperage scale. Connect the multi-meter between the disconnected battery negative cable terminal clamp and the battery negative terminal post. Make sure that the doors remain closed so that the illuminated entry system is not activated. The multi-meter amperage reading may remain high for up to three minutes, or may not give any reading at all while set in the highest amperage scale, depending upon the electrical equipment in the vehicle. The multi-meter leads must be securely clamped to the battery negative cable terminal clamp and the battery negative terminal post. If continuity between the battery negative terminal post and the negative cable terminal clamp is lost during any part of the IOD test, the electronic timer function will be activated and all of the tests will have to be repeated.

(5) After about three minutes, the high-amperage IOD reading on the multi-meter should become very low or nonexistent, depending upon the electrical equipment in the vehicle. If the amperage reading remains high, remove and replace each fuse or circuit breaker in the Power Distribution Center (PDC) and then in the Junction Block (JB), one at a time until the amperage reading becomes very low, or nonexistent. Refer to the appropriate wiring information in this service manual for complete PDC and JB fuse, circuit breaker, and circuit identification. This will isolate each circuit and identify the circuit that is the source of the high-amperage IOD. If the amperage reading remains high after removing and replacing each fuse and circuit breaker, disconnect the wire harness from the generator. If the amperage reading now becomes very low or nonexistent, refer to Charging System for the proper charging system diagnosis and testing procedures. After the high-amperage IOD has been corrected, switch the multi-meter to progressively lower amperage scales and, if necessary, repeat the fuse and circuit breaker remove-and-replace process to identify and correct all sources of excessive IOD. It is now safe to select the lowest milliampere scale of the multi-meter to check the low-amperage IOD.

CAUTION: Do not open any doors, or turn on any electrical accessories with the lowest milliampere scale selected, or the multi-meter may be damaged.

(6) Observe the multi-meter reading. The low-amperage IOD should not exceed thirty-five milliamperes (0.035 ampere). If the current draw exceeds thirty-five milliamperes, isolate each circuit using the fuse and circuit breaker remove-and-replace process in Step 5. The multi-meter reading will drop to within the acceptable limit when the source of the excessive current draw is disconnected. Repair this circuit as required; whether a wiring short, incorrect switch adjustment, or a component failure is at fault.

REMOVAL

(1) Turn the ignition switch to the Off position. Be certain that all electrical accessories are turned off.

BATTERY (Continued)

(2) Loosen the battery negative cable terminal clamp pinch-bolt hex nut.

(3) Disconnect the battery negative cable terminal clamp from the battery negative terminal post. If necessary, use a battery terminal puller to remove the terminal clamp from the battery post (Fig. 17).

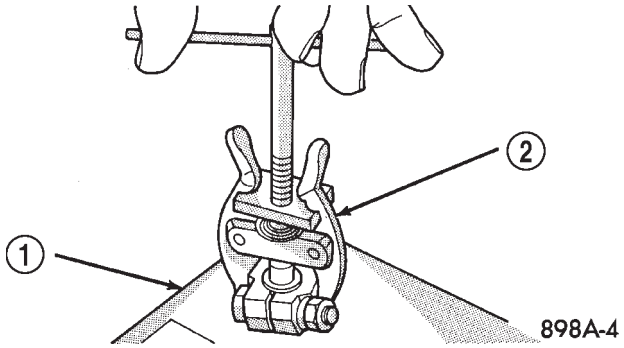

Fig. 17 Remove Battery Cable Terminal Clamp - Typical

1 - BATTERY
2 - BATTERY TERMINAL PULLER

(4) Loosen the battery positive cable terminal clamp pinch-bolt hex nut.

(5) Disconnect the battery positive cable terminal clamp from the battery positive terminal post. If necessary, use a battery terminal puller to remove the terminal clamp from the battery post.

(6) Remove the battery hold downs from the battery. Refer to **Battery Hold Downs**

WARNING: WEAR A SUITABLE PAIR OF RUBBER GLOVES (NOT THE HOUSEHOLD TYPE) WHEN REMOVING A BATTERY BY HAND. SAFETY GLASSES SHOULD ALSO BE WORN. IF THE BATTERY IS CRACKED OR LEAKING, THE ELECTROLYTE CAN BURN THE SKIN AND EYES.

(7) Remove the battery and the battery thermal guard from the battery tray as a unit.

(8) Remove the battery thermal guard from the battery case. Refer to **Battery Thermal Guard**

INSTALLATION

(1) Clean and inspect the battery. Refer to **Battery**

(2) Reinstall the battery thermal guard onto the battery case. Refer to **Battery Thermal Guard**

(3) Position the battery and the battery thermal guard onto the battery tray as a unit. Ensure that the battery positive and negative terminal posts are correctly positioned. The battery cable terminal clamps must reach the correct battery terminal post without stretching the cables (Fig. 18) or (Fig. 19).

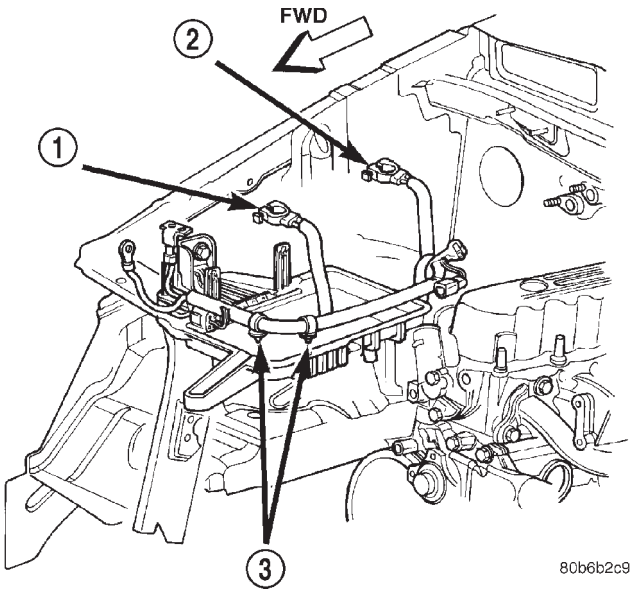

Fig. 18 Battery Cables - 4.0L Engine

1 - BATTERY POSITIVE CABLE
2 - BATTERY NEGATIVE CABLE
3 - CLIPS

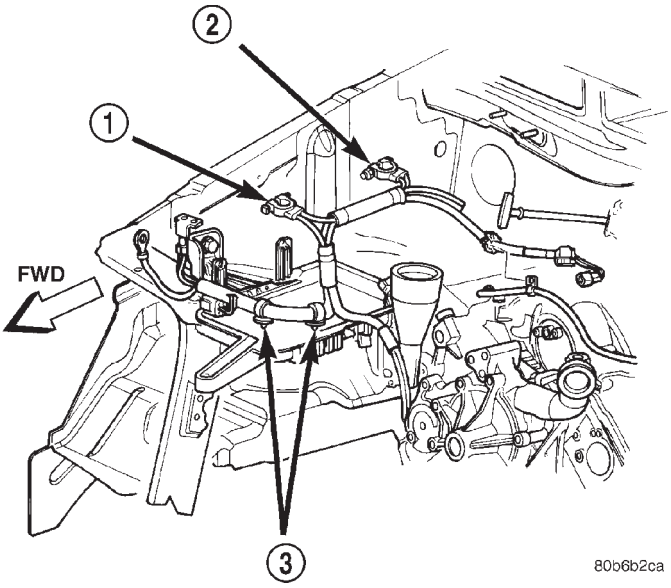

Fig. 19 Battery Cables - 4.7L Engine

1 - BATTERY POSITIVE CABLE
2 - BATTERY NEGATIVE CABLE
3 - CLIPS

(4) Reinstall the battery hold downs onto the battery. Refer to **Battery Hold Downs**

CAUTION: Be certain that the battery cable terminal clamps are connected to the correct battery terminal posts. Reverse battery polarity may damage electrical components of the vehicle.

BATTERY (Continued)

(5) Clean the battery cable terminal clamps and the battery terminal posts. Refer to **Battery**

(6) Reconnect the battery positive cable terminal clamp to the battery positive terminal post. Tighten the terminal clamp pinch-bolt hex nut to 6.8 N·m (60 in. lbs.).

(7) Reconnect the battery negative cable terminal clamp to the battery negative terminal post. Tighten the terminal clamp pinch-bolt hex nut to 6.8 N·m (60 in. lbs.).

(8) Apply a thin coating of petroleum jelly or chassis grease to the exposed surfaces of the battery cable terminal clamps and the battery terminal posts.

BATTERY HOLDDOWN

DESCRIPTION

The battery hold down hardware (Fig. 20) a molded plastic lip that is integral to the outboard edge of the battery tray and support unit, a molded plastic hold down bracket, a single hex screw with a coned washer and a U-nut.

When installing a battery into the battery tray, be certain that the hold down hardware is properly installed and that the fasteners are tightened to the proper specifications. Improper hold down fastener tightness, whether too loose or too tight, can result in damage to the battery, the vehicle or both. Refer to **Battery Hold Downs** in the index of this service manual for the location of the proper battery hold down installation procedures, including the proper hold down fastener tightness specifications.

OPERATION

The battery holddown secures the battery in the battery tray. This holddown is designed to prevent battery movement during the most extreme vehicle operation conditions. Periodic removel and lubrication of the battery holddown hardware is recomended to prevent hardware seizure at a later date.

NOTE: Never operate a vehicle without a battery holddown device properly installed. Damage to the vehicle, components and battery could result.

REMOVAL

All of the battery hold down hardware can be serviced without removal of the battery or the battery tray and support unit.

(1) Turn the ignition switch to the Off position. Be certain that all electrical accessories are turned off.

(2) Loosen the battery negative cable terminal clamp pinch-bolt hex nut.

(3) Disconnect the battery negative cable terminal clamp from the battery negative terminal post. If necessary, use a battery terminal puller to remove the terminal clamp from the battery post.

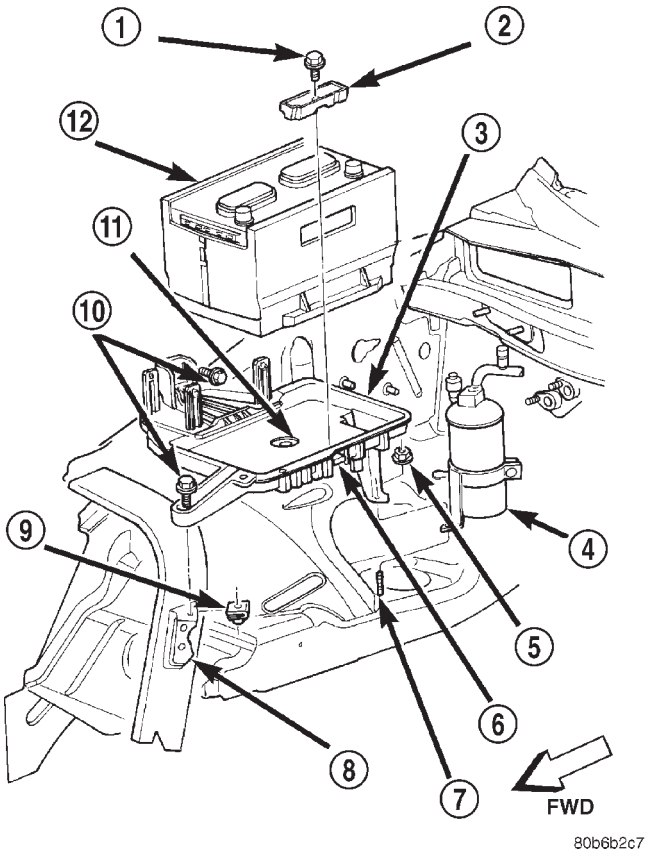

Fig. 20 Battery Hold Downs

1 - SCREW
2 - HOLD DOWN BRACKET
3 - BATTERY SUPPORT
4 - ACCUMULATOR
5 - NUT
6 - U-NUT
7 - STUD
8 - RADIATOR SUPPORT BRACKET
9 - U-NUT
10 - SCREW
11 - BATTERY TEMPERATURE SENSOR
12 - BATTERY AND THERMAL GUARD

(4) Remove the screw with washer that secures the battery hold down bracket to the U-nut on the inboard side of the battery tray and support unit (Fig. 21).

(5) Remove the battery hold down bracket from the battery tray and support unit.

INSTALLATION

All of the battery hold down hardware can be serviced without removal of the battery or the battery tray and support unit.

(1) Clean and inspect the battery hold down hardware. Refer to **Battery** in the index of this service

BATTERY HOLDDOWN (Continued)

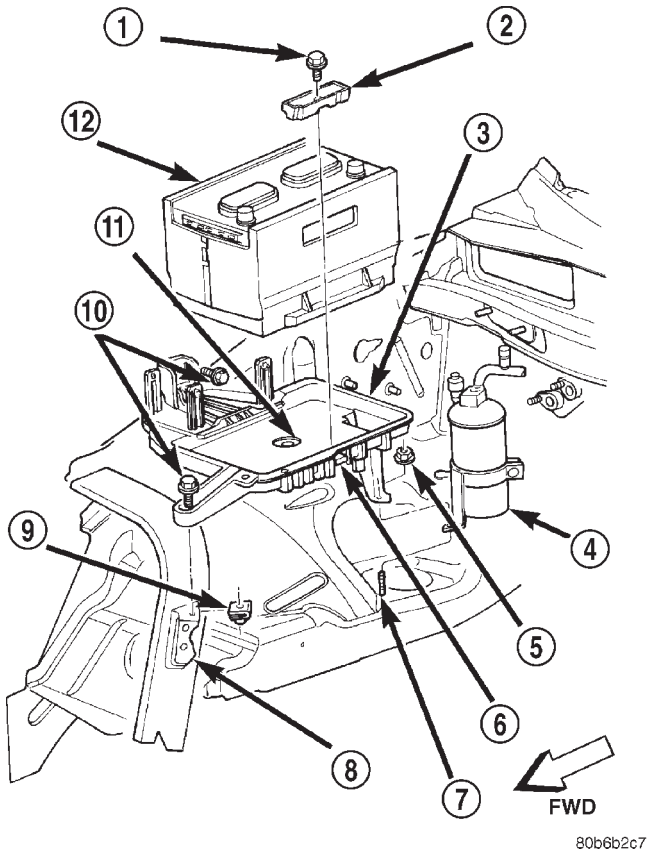

Fig. 21 Battery Hold Downs Remove/Install

1 - SCREW
2 - HOLD DOWN BRACKET
3 - BATTERY SUPPORT
4 - ACCUMULATOR
5 - NUT
6 - U-NUT
7 - STUD
8 - RADIATOR SUPPORT BRACKET
9 - U-NUT
10 - SCREW
11 - BATTERY TEMPERATURE SENSOR
12 - BATTERY AND THERMAL GUARD

manual for the location of the proper battery hold down hardware cleaning and inspection procedures.

(2) Be certain that the battery is properly positioned in the battery tray and support unit. The ledge on the outboard side of the battery case must be engaged under the lip on the outboard side of the battery tray and support unit.

(3) Position the battery hold down bracket over the ledge on the inboard side of the battery case in the battery tray and support unit. Be certain that the ledge on the bottom of the hold down bracket is oriented towards the inboard side of the battery case. Proper hold down bracket orientation may also be determined by noting the direction of the arrow-like formations of the molded reinforcing ribs on the top of the hold down bracket. These arrows should be pointed towards the battery.

(4) Install and tighten the screw that secures the battery hold down bracket to the U-nut on the inboard side of the battery tray and support unit. Tighten thew screw to 3.4 N·m (30 in. lbs.).

(5) Reconnect the battery negative cable terminal clamp to the battery negative terminal post. Tighten the terminal clamp pinch-bolt hex nut to 8.4 N·m (75 in. lbs.).

BATTERY CABLE

DESCRIPTION

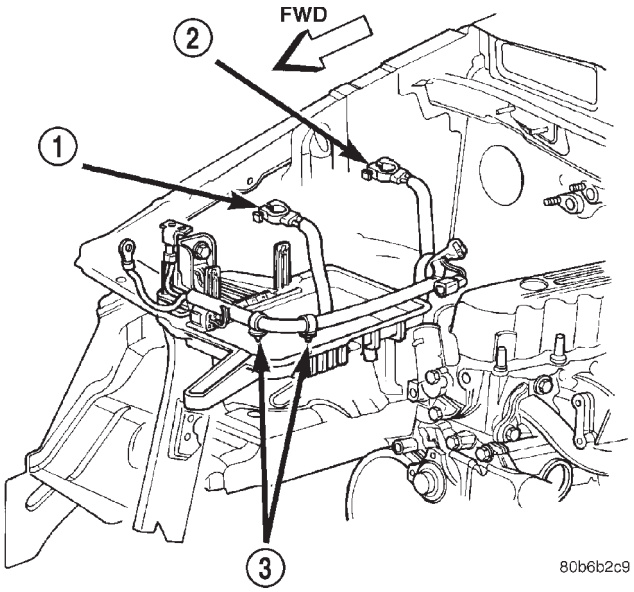

Fig. 22 Battery Cables - 4.0L Engine

1 - BATTERY POSITIVE CABLE
2 - BATTERY NEGATIVE CABLE
3 - CLIPS

The battery cables (Fig. 22) or (Fig. 23) are large gauge, stranded copper wires sheathed within a heavy plastic or synthetic rubber insulating jacket. The wire used in the battery cables combines excellent flexibility and reliability with high electrical current carrying capacity. Refer to **Wiring Diagrams** in the index of this service manual for the location of the proper battery cable wire gauge information.

A clamping type female battery terminal made of soft lead is die cast onto one end of the battery cable wire. A square headed pinch-bolt and hex nut are installed at the open end of the female battery terminal clamp. Large eyelet type terminals are crimped onto the opposite end of the battery cable wire and then solder-dipped. The battery positive cable wires have a red insulating jacket to provide visual identification and feature a larger female battery terminal

BATTERY CABLE (Continued)

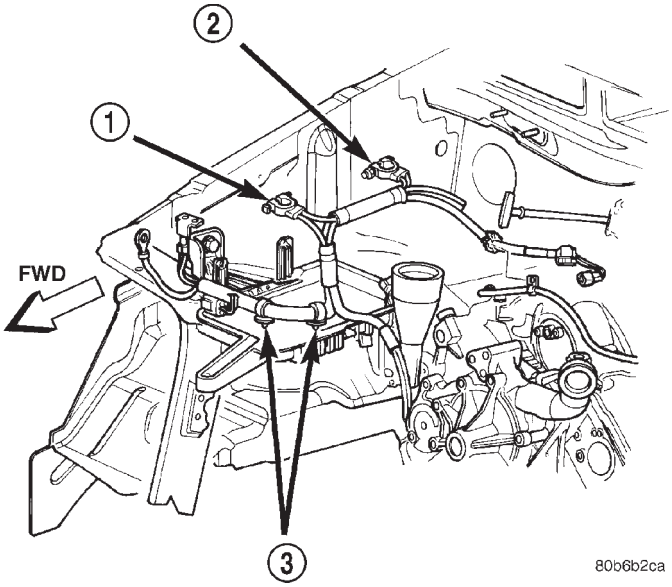

Fig. 23 Battery Cables - 4.7L Engine

1 - BATTERY POSITIVE CABLE
2 - BATTERY NEGATIVE CABLE
3 - CLIPS

clamp to allow connection to the larger battery positive terminal post. The battery negative cable wires have a black insulating jacket and a smaller female battery terminal clamp.

The battery cables cannot be repaired and, if damaged or faulty they must be replaced. Both the battery positive and negative cables are available for service replacement only as a unit with the battery wire harness, which may include portions of the wiring circuits for the generator and other components on some models. Refer to **Wiring Diagrams** in the index of this service manual for the location of more information on the various wiring circuits included in the battery wire harness for the vehicle being serviced.

OPERATION

The battery cables connect the battery terminal posts to the vehicle electrical system. These cables also provide a path back to the battery for electrical current generated by the charging system for restoring the voltage potential of the battery. The female battery terminal clamps on the ends of the battery cable wires provide a strong and reliable connection of the battery cable to the battery terminal posts. The terminal pinch bolts allow the female terminal clamps to be tightened around the male terminal posts on the top of the battery. The eyelet terminals secured to the opposite ends of the battery cable wires from the female battery terminal clamps provide secure and reliable connection of the battery cables to the vehicle electrical system.

The battery positive cable terminal clamp is die cast onto the ends of two wires. One wire has an eyelet terminal that connects the battery positive cable to the B(+) terminal stud of the Power Distribution Center (PDC), and the other wire has an eyelet terminal that connects the battery positive cable to the B(+) terminal stud of the engine starter motor solenoid. The battery negative cable terminal clamp is also die cast onto the ends of two wires. One wire has an eyelet terminal that connects the battery negative cable to the vehicle powertrain through a stud on the right side of the engine cylinder block. The other wire has an eyelet terminal that connects the battery negative cable to the vehicle body through a ground screw on the right front fender inner shield, near the battery.

DIAGNOSIS AND TESTING - BATTERY CABLE

A voltage drop test will determine if there is excessive resistance in the battery cable terminal connections or the battery cable. If excessive resistance is found in the battery cable connections, the connection point should be disassembled, cleaned of all corrosion or foreign material, then reassembled. Following reassembly, check the voltage drop for the battery cable connection and the battery cable again to confirm repair.

When performing the voltage drop test, it is important to remember that the voltage drop is giving an indication of the resistance between the two points at which the voltmeter probes are attached. **EXAMPLE:** When testing the resistance of the battery positive cable, touch the voltmeter leads to the battery positive cable terminal clamp and to the battery positive cable eyelet terminal at the starter solenoid B(+) terminal stud. If you probe the battery positive terminal post and the battery positive cable eyelet terminal at the starter solenoid B(+) terminal stud, you are reading the combined voltage drop in the battery positive cable terminal clamp-to-terminal post connection and the battery positive cable.

VOLTAGE DROP TEST

WARNING: IF THE BATTERY SHOWS SIGNS OF FREEZING, LEAKING, LOOSE POSTS, DO NOT TEST, ASSIST-BOOST, OR CHARGE. THE BATTERY MAY ARC INTERNALLY AND EXPLODE. PERSONAL INJURY AND/OR VEHICLE DAMAGE MAY RESULT.

WARNING: EXPLOSIVE HYDROGEN GAS FORMS IN AND AROUND THE BATTERY. DO NOT SMOKE, USE FLAME, OR CREATE SPARKS NEAR THE BATTERY. PERSONAL INJURY AND/OR VEHICLE DAMAGE MAY RESULT.

BATTERY CABLE (Continued)

WARNING: THE BATTERY CONTAINS SULFURIC ACID, WHICH IS POISONOUS AND CAUSTIC. AVOID CONTACT WITH THE SKIN, EYES, OR CLOTHING. IN THE EVENT OF CONTACT, FLUSH WITH WATER AND CALL A PHYSICIAN IMMEDIATELY. KEEP OUT OF THE REACH OF CHILDREN.

WARNING: IF THE BATTERY IS EQUIPPED WITH REMOVABLE CELL CAPS, BE CERTAIN THAT EACH OF THE CELL CAPS IS IN PLACE AND TIGHT BEFORE THE BATTERY IS RETURNED TO SERVICE. PERSONAL INJURY AND/OR VEHICLE DAMAGE MAY RESULT FROM LOOSE OR MISSING CELL CAPS.

The following operation will require a voltmeter accurate to 1/10 (0.10) volt. Before performing this test, be certain that the following procedures are accomplished:

- The battery is fully-charged and load tested. Refer to Standard Procedures for the proper battery charging and load test procedures.
- Fully engage the parking brake.
- If the vehicle is equipped with an automatic transmission, place the gearshift selector lever in the Park position. If the vehicle is equipped with a manual transmission, place the gearshift selector lever in the Neutral position and block the clutch pedal in the fully depressed position.
- Verify that all lamps and accessories are turned off.
- To prevent the engine from starting, remove the Automatic Shut Down (ASD) relay. The ASD relay is located in the Power Distribution Center (PDC), in the engine compartment. See the fuse and relay layout label affixed to the underside of the PDC cover for ASD relay identification and location.

(1) Connect the positive lead of the voltmeter to the battery negative terminal post. Connect the negative lead of the voltmeter to the battery negative cable terminal clamp (Fig. 24). Rotate and hold the ignition switch in the Start position. Observe the voltmeter. If voltage is detected, correct the poor connection between the battery negative cable terminal clamp and the battery negative terminal post.

(2) Connect the positive lead of the voltmeter to the battery positive terminal post. Connect the negative lead of the voltmeter to the battery positive cable terminal clamp (Fig. 25). Rotate and hold the ignition switch in the Start position. Observe the voltmeter. If voltage is detected, correct the poor connection between the battery positive cable terminal clamp and the battery positive terminal post.

(3) Connect the voltmeter to measure between the battery positive cable terminal clamp and the starter solenoid B(+) terminal stud (Fig. 26). Rotate and hold the ignition switch in the Start position. Observe the voltmeter. If the reading is above 0.2 volt, clean and tighten the battery positive cable eyelet terminal connection at the starter solenoid B(+) terminal stud. Repeat the test. If the reading is still above 0.2 volt, replace the faulty battery positive cable.

(4) Connect the voltmeter to measure between the battery negative cable terminal clamp and a good clean ground on the engine block (Fig. 27). Rotate and hold the ignition switch in the Start position. Observe the voltmeter. If the reading is above 0.2 volt, clean and tighten the battery negative cable eyelet terminal connection to the engine block. Repeat the test. If the reading is still above 0.2 volt, replace the faulty battery negative cable.

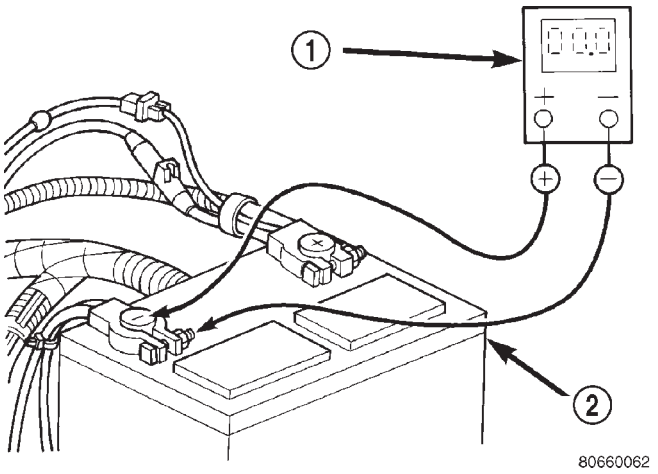

Fig. 24 Test Battery Negative Connection Resistance - Typical

1 - VOLTMETER
2 - BATTERY

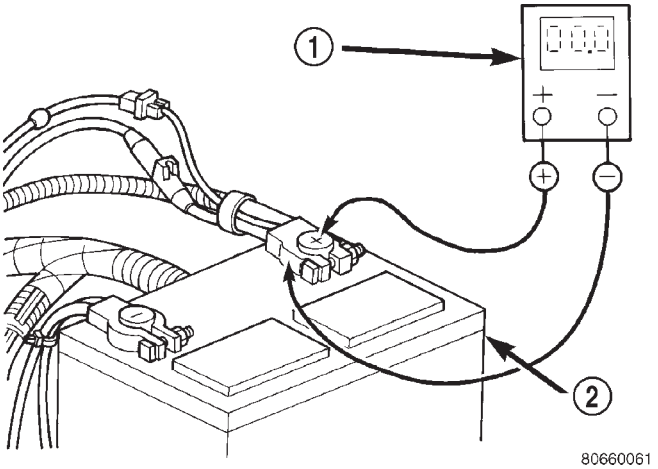

Fig. 25 Test Battery Positive Connection Resistance - Typical

1 - VOLTMETER
2 - BATTERY

BATTERY CABLE (Continued)

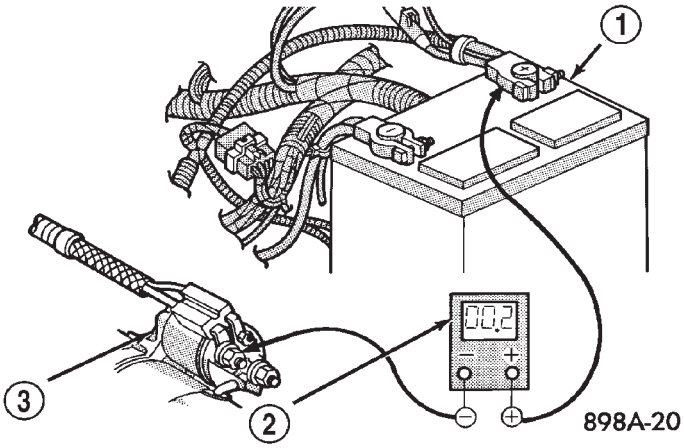

Fig. 26 Test Battery Positive Cable Resistance - Typical

1 - BATTERY
2 - VOLTMETER
3 - STARTER MOTOR

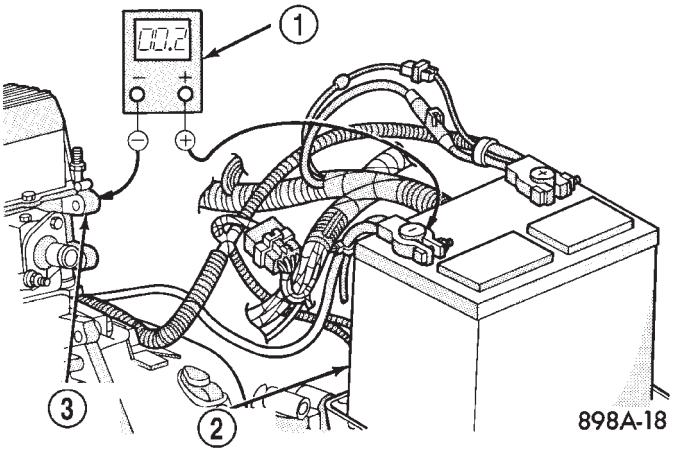

Fig. 27 Test Ground Circuit Resistance - Typical

1 - VOLTMETER
2 - BATTERY
3 - ENGINE GROUND

REMOVAL

Both the battery negative cable and the battery positive cable are serviced in the battery wire harness. If either battery cable is damaged or faulty, the battery wire harness unit must be replaced.

(1) Turn the ignition switch to the Off position. Be certain that all electrical accessories are turned off.

(2) Loosen the battery negative cable terminal clamp pinch-bolt hex nut.

(3) Disconnect the battery negative cable terminal clamp from the battery negative terminal post. If necessary, use a battery terminal puller to remove the terminal clamp from the battery post.

(4) Loosen the battery positive cable terminal clamp pinch-bolt hex nut.

(5) Disconnect the battery positive cable terminal clamp from the battery positive terminal post. If necessary, use a battery terminal puller to remove the terminal clamp from the battery post.

(6) Unlatch and open the cover on the Power Distribution Center (PDC).

(7) Remove the two nuts that secure the battery positive cable and generator output cable eyelet terminal to the B(+) terminal studs in the PDC.

(8) Remove the battery positive cable and generator output cable eyelet terminal from the B(+) terminal studs in the PDC.

(9) Disconnect the battery wire harness connector from the right headlamp and dash wire harness connector located near the front of the battery.

(10) Remove the screw that secures the battery negative cable eyelet terminal to the inner fender shield near the front of the battery.

(11) On models with the 4.7L engine, remove the nut that secures the battery harness clip to the stud on the right side of the intake manifold and remove the clip from the stud.

(12) Unlatch and remove the cover from the generator output terminal stud housing on the back of the generator.

(13) Remove the nut that secures the generator output cable eyelet terminal to the generator output terminal stud.

(14) Remove the generator output cable eyelet terminal from the generator output terminal stud.

(15) Disconnect the battery wire harness connector from the generator field terminal connector receptacle on the back of the generator.

(16) Remove the screw that secures the battery negative cable ground eyelet terminal to the right side of the engine block.

(17) Remove the nut that secures the battery positive cable eyelet terminal to the B(+) terminal stud on the starter solenoid.

(18) Remove the battery positive cable eyelet terminal from the B(+) terminal stud on the starter solenoid.

(19) Disconnect the battery wire harness connector from the connector receptacle on the starter solenoid.

(20) Remove the battery wire harness from the engine compartment.

INSTALLATION

Both the battery negative cable and the battery positive cable are serviced in the battery wire harness. If either battery cable is damaged or faulty, the battery wire harness unit must be replaced.

(1) Clean and inspect the battery cable terminal clamps and the battery terminal posts. Refer to **Bat-**

BATTERY CABLE (Continued)

tery in the index of this service manual for the location of the proper battery cable terminal clamp and battery terminal post cleaning and inspection procedures.

(2) Position the battery wire harness into the engine compartment (Fig. 28) or (Fig. 29).

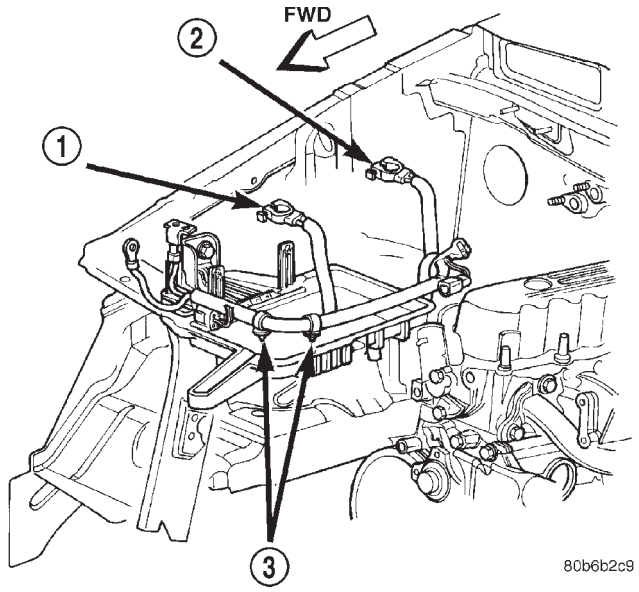

Fig. 28 Battery Cables - 4.0L Engine

1 - BATTERY POSITIVE CABLE
2 - BATTERY NEGATIVE CABLE
3 - CLIPS

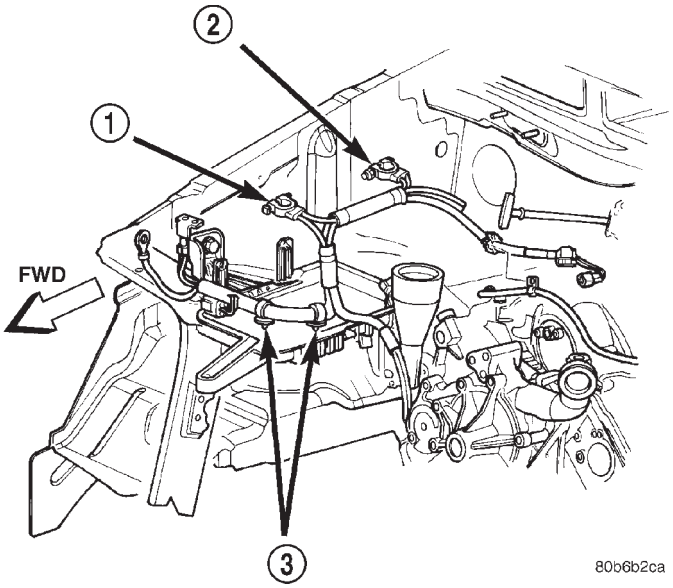

Fig. 29 Battery Cables - 4.7L Engine

1 - BATTERY POSITIVE CABLE
2 - BATTERY NEGATIVE CABLE
3 - CLIPS

(3) Reconnect the battery wire harness connector to the connector receptacle on the starter solenoid.

(4) Install the battery positive cable eyelet terminal onto the B(+) terminal stud on the starter solenoid.

(5) Install and tighten the nut that secures the battery positive cable eyelet terminal to the B(+) terminal stud on the starter solenoid. Tighten the nut to 11.3 N·m (100 in. lbs.).

(6) Install and tighten the screw that secures the battery negative cable ground eyelet terminal to the right side of the engine block. Tighten the screw to 10.2 N·m (90 in. lbs.) for 4.0L engines, or 13.0 N·m (115 in. lbs.) for 4.7L engines.

(7) Reconnect the battery wire harness connector to the generator field terminal connector receptacle on the back of the generator.

(8) Install the generator output cable eyelet terminal onto the generator output terminal stud.

(9) Install and tighten the nut that secures the generator output cable eyelet terminal to the generator output terminal stud. Tighten the nut to 10.7 N·m (95 in. lbs.).

(10) Position the cover for the generator output terminal stud housing onto the back of the generator and snap it into place.

(11) On models with the 4.7L engine, install the battery harness clip onto the stud on the right side of the intake manifold, then install and tighten the nut that secures the clip to the stud. Tighten the nut to 11.3 N·m (100 in. lbs.).

(12) Install and tighten the screw that secures the battery negative cable eyelet terminal to the inner fender shield near the front of the battery. Tighten the screw to 28.2 N·m (250 in. lbs.).

(13) Reconnect the battery wire harness connector to the right headlamp and dash wire harness connector located near the front of the battery.

(14) Install the battery positive cable and generator output cable eyelet terminal onto the PDC B(+) terminal studs.

(15) Install and tighten the two nuts that secure the battery positive cable and generator output cable eyelet terminal to the PDC B(+) terminal studs. Tighten the nuts to 11.3 N·m (100 in. lbs.).

(16) Close and latch the PDC cover.

(17) Reconnect the battery positive cable terminal clamp to the battery positive terminal post. Tighten the terminal clamp pinch-bolt hex nut to 6.8 N·m (60 in. lbs.).

(18) Reconnect the battery negative cable terminal clamp to the battery negative terminal post. Tighten the terminal clamp pinch-bolt hex nut to 6.8 N·m (60 in. lbs.).

BATTERY CABLE (Continued)

(19) Apply a thin coating of petroleum jelly or chassis grease to the exposed surfaces of the battery cable terminal clamps and the battery terminal posts.

BATTERY TRAY

DESCRIPTION

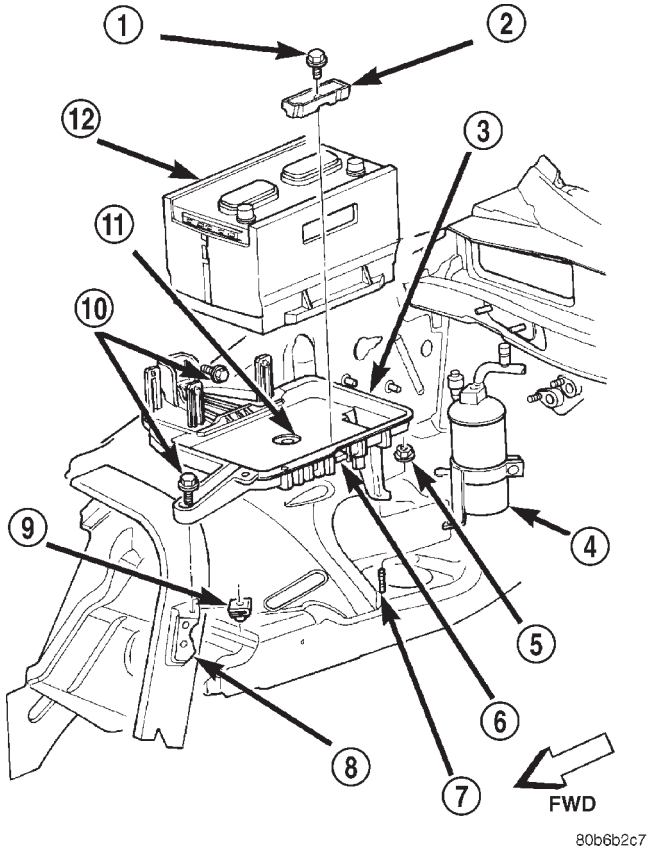

Fig. 30 Battery Tray and Support

1 - SCREW
2 - HOLD DOWN BRACKET
3 - BATTERY SUPPORT
4 - ACCUMULATOR
5 - NUT
6 - U-NUT
7 - STUD
8 - RADIATOR SUPPORT BRACKET
9 - U-NUT
10 - SCREW
11 - BATTERY TEMPERATURE SENSOR
12 - BATTERY AND THERMAL GUARD

The battery is mounted in a molded plastic battery tray and support unit (Fig. 30) located in the right front corner of the engine compartment. The battery tray and support unit is secured at the rear with a nut to a stud on the front wheelhouse inner panel, at the outboard side with a screw to the side cowl reinforcement panel, and at the front with a screw through a U-nut on a bracket of the radiator support.

The battery tray and support unit also includes three upright stanchions that are molded into the outboard side of the unit. These stanchions support the Power Distribution Center (PDC). Refer to **Power Distribution Center** in the index of this service manual for the location of more information on the PDC mounting.

A hole in the bottom of the battery tray is fitted with a battery temperature sensor. Refer to **Battery Temperature Sensor** in the index of this service manual for the location of more information on the battery temperature sensor. Refer to **Battery Hold Downs** in the index of this service manual for the location of more information on the battery hold down hardware.

OPERATION

The battery tray provides a secure mounting location and supports the battery. On some vehicles, the battery tray also provides the anchor point/s for the battery holddown hardware. The battery tray and the battery holddown hardware combine to secure and stabilize the battery in the engine compartment, which prevents battery movement during vehicle operation. Unrestrained battery movement during vehicle operation could result in damage to the vehicle, the battery, or both.

REMOVAL

(1) Remove the battery from the battery tray. Refer to **Battery** in this group for the location of the proper battery removal procedures.

(2) Remove the Power Distribution Center (PDC) from the stanchions on the outboard side of the battery tray and support unit. Refer to **Power Distribution Center** in Power Distribution for the location of the proper PDC removal procedures.

(3) Remove the one screw that secures the front of the battery tray and support unit to the bracket on the right side of the radiator support (Fig. 31).

(4) Remove the one screw that secures the outboard side of the battery tray and support unit to the right fender side cowl reinforcement.

(5) Remove the one nut that secures the rear of the battery tray and support unit to the stud on the right fender front wheelhouse inner panel.

(6) Remove the battery temperature sensor from the battery tray. Refer to **Battery Temperature Sensor** in the index of this service manual for the location of the proper battery temperature sensor removal procedures.

(7) Remove the battery tray and support unit from the right front corner of the engine compartment.

BATTERY TRAY (Continued)

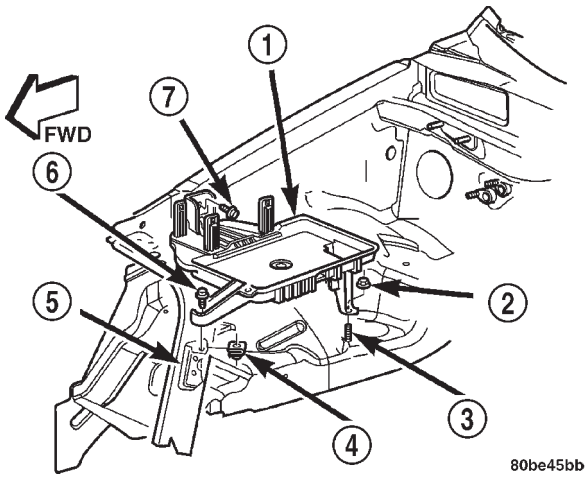

Fig. 31 Battery Tray and Support Remove/Install

1 - BATTERY TRAY AND SUPPORT
2 - NUT (1)
3 - STUD
4 - U-NUT (1)
5 - RADIATOR SUPPORT BRACKET
6 - SCREW (1)
7 - SCREW (1)

INSTALLATION

(1) Clean and inspect the battery tray and support unit. Refer to **Battery** in the index of this service manual for the location of the proper battery tray and support unit cleaning and inspection procedures.

(2) Install the battery temperature sensor onto the battery tray. Refer to **Battery Temperature Sensor** in the index of this service manual for the location of the proper battery temperature sensor installation procedures.

(3) Position the battery tray and support unit into the right front corner of the engine compartment. Be certain that no hoses or wire harnesses are trapped or pinched by the installation of the tray.

(4) Install and tighten the one nut that secures the rear of the battery tray and support unit to the stud on the right fender front wheelhouse inner panel. Tighten the nut to 7.3 N·m (65 in. lbs.).

(5) Install and tighten the one screw that secures the outboard side of the battery tray and support unit to the right fender side cowl reinforcement. Tighten the screw to 8.1 N·m (72 in. lbs.).

(6) Install and tighten the one screw that secures the front of the battery tray and support unit to the bracket on the right side of the radiator support. Tighten the screw to 8.1 N·m (72 in. lbs.).

(7) Install the Power Distribution Center (PDC) onto the stanchions on the outboard side of the battery tray and support unit. Refer to **Power Distribution Center** in the index of this service manual for the location of the proper PDC installation procedures.

(8) Install the battery onto the battery tray. Refer to **Battery** in the index of this service manual for the location of the proper battery installation procedures.

THERMAL GUARD

DESCRIPTION

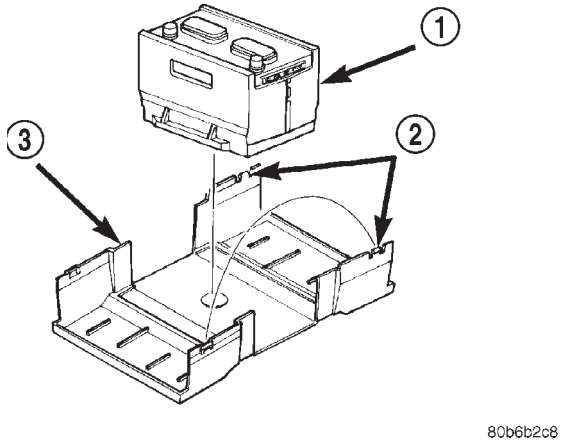

Fig. 32 Battery Thermal guard

1 - BATTERY
2 - LATCHES
3 - THERMAL GUARD

A two-piece molded plastic clam shell-type thermal guard unit (Fig. 32) encloses all four sides of the battery case. A single molded latch on each end of the thermal guard secures the unit around the battery. The thermal guard can only be removed or installed over the battery with the battery removed from the battery tray and support unit.

OPERATION

The thermal guard protects the battery from engine compartment temperature extremes. The temperature of the battery can affect battery performance. The air trapped between the plastic plies of the thermal guard create a dead air space, which helps to insulate the sides of the battery case from the air temperature found in the surrounding engine compartment.

REMOVAL

(1) Remove the battery and the battery thermal guard from the battery tray as a unit. Refer to **Battery** in the index of this service manual for the location of the proper battery removal procedures.

THERMAL GUARD (Continued)

(2) Carefully release the latch on each end of the battery thermal guard and remove the thermal guard from the battery (Fig. 33).

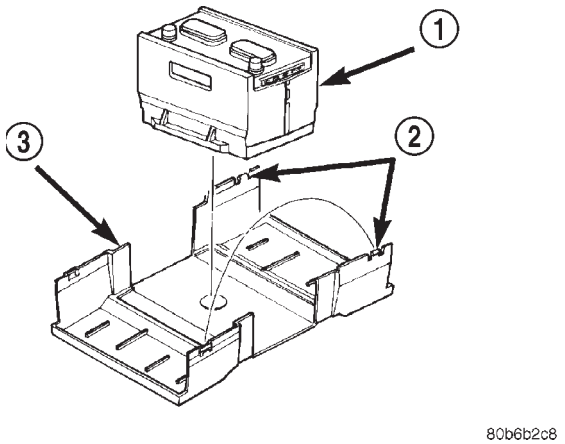

Fig. 33 Battery Thermal Guard Remove/Install

1 - BATTERY
2 - LATCHES
3 - THERMAL GUARD

INSTALLATION

(1) Clean and inspect the battery thermal guard. Refer to **Battery** in the index of this service manual for the location of the proper battery thermal guard cleaning and inspection procedures.

(2) Position the two halves of the battery thermal guard on opposite sides of the battery.

(3) Carefully align the two halves of the battery thermal guard, then push them together until the latches on each end of the thermal guard are fully engaged.

(4) Install the battery and the battery thermal guard into the battery tray as a unit. Refer to **Battery** in the index of this service manual for the location of the proper battery installation procedures.

CHARGING

TABLE OF CONTENTS

page

CHARGING
DESCRIPTION 28
OPERATION. 28
DIAGNOSIS AND TESTING 28
CHARGING SYSTEM 28
SPECIFICATIONS 29
BATTERY TEMPERATURE SENSOR
DESCRIPTION 30
OPERATION. 30
REMOVAL 30
INSTALLATION. 30
GENERATOR
DESCRIPTION 30
OPERATION. 30
REMOVAL 31
INSTALLATION. 31
VOLTAGE REGULATOR
DESCRIPTION 32
OPERATION. 32

CHARGING

DESCRIPTION

The charging system consists of:

- Generator
- Electronic Voltage Regulator (EVR) circuitry within the Powertrain Control Module (PCM)
- Ignition switch (refer to 8, Ignition System for information)
- Battery (refer to 8, Battery for information)
- Battery temperature sensor
- Generator Lamp (if equipped)
- Check Gauges Lamp (if equipped)
- Voltmeter (refer to 8, Instrument Panel and Gauges for information)
- Wiring harness and connections (refer to 8, Wiring for information)

OPERATION

The charging system is turned on and off with the ignition switch. The system is on when the engine is running and the ASD relay is energized. When the ASD relay is on, voltage is supplied to the ASD relay sense circuit at the PCM. This voltage is connected through the PCM and supplied to one of the generator field terminals (Gen. Source +) at the back of the generator.

The amount of DC current produced by the generator is controlled by the EVR (field control) circuitry contained within the PCM. This circuitry is connected in series with the second rotor field terminal and ground.

A battery temperature sensor, located in the battery tray housing, is used to sense battery temperature. This temperature data, along with data from monitored line voltage, is used by the PCM to vary the battery charging rate. This is done by cycling the ground path to control the strength of the rotor magnetic field. The PCM then compensates and regulates generator current output accordingly.

All vehicles are equipped with On-Board Diagnostics (OBD). All OBD-sensed systems, including EVR (field control) circuitry, are monitored by the PCM. Each monitored circuit is assigned a Diagnostic Trouble Code (DTC). The PCM will store a DTC in electronic memory for certain failures it detects. Refer to Diagnostic Trouble Codes in; Powertrain Control Module; Electronic Control Modules for more DTC information.

The Check Gauges Lamp (if equipped) monitors: **charging system voltage,** engine coolant temperature and engine oil pressure. If an extreme condition is indicated, the lamp will be illuminated. This is done as reminder to check the three gauges. The signal to activate the lamp is sent via the CCD bus circuits. The lamp is located on the instrument panel. Refer to 8, Instrument Panel and Gauges for additional information.

DIAGNOSIS AND TESTING - CHARGING SYSTEM

The following procedures may be used to diagnose the charging system if:

- the generator lamp (if equipped) is illuminated with the engine running
- the voltmeter (if equipped) does not register properly
- an undercharged or overcharged battery condition occurs.

Remember that an undercharged battery is often caused by:

- accessories being left on with the engine not running

CHARGING (Continued)

• a faulty or improperly adjusted switch that allows a lamp to stay on. Refer to Ignition-Off Draw Test in 8, Battery for more information.

INSPECTION

The Powertrain Control Module (PCM) monitors critical input and output circuits of the charging system, making sure they are operational. A Diagnostic Trouble Code (DTC) is assigned to each input and output circuit monitored by the On-Board Diagnostic (OBD) system. Some charging system circuits are checked continuously, and some are checked only under certain conditions.

Refer to Diagnostic Trouble Codes in; Powertrain Control Module; Electronic Control Modules for more DTC information. This will include a complete list of DTC's including DTC's for the charging system.

To perform a complete test of the charging system, refer to the appropriate Powertrain Diagnostic Procedures service manual and the DRB® scan tool. Perform the following inspections before attaching the scan tool.

(1) Inspect the battery condition. Refer to 8, Battery for procedures.

(2) Inspect condition of battery cable terminals, battery posts, connections at engine block, starter solenoid and relay. They should be clean and tight. Repair as required.

(3) Inspect all fuses in both the fuseblock and Power Distribution Center (PDC) for tightness in receptacles. They should be properly installed and tight. Repair or replace as required.

(4) Inspect generator mounting bolts for tightness. Replace or tighten bolts if required. Refer to the Generator Removal/Installation section of this group for torque specifications.

(5) Inspect generator drive belt condition and tension. Tighten or replace belt as required. Refer to Belt Tension Specifications in 7, Cooling System.

(6) Inspect automatic belt tensioner (if equipped). Refer to 7, Cooling System for information.

(7) Inspect generator electrical connections at generator field, battery output, and ground terminal (if equipped). Also check generator ground wire connection at engine (if equipped). They should all be clean and tight. Repair as required.

SPECIFICATIONS

GENERATOR RATINGS - GAS POWERED

TYPE	PART NUMBER	RATED SAE AMPS	ENGINES	MINIMUM TEST AMPS
BOSCH	56041322	136	4.0L 6-Cylinder	100
DENSO	56041324	136	4.7L V-8	100

TORQUE - GAS POWERED

DESCRIPTION	N-m	Ft. Lbs.	In. Lbs.
Generator Mounting Bolts-4.0L	55	41	
Generator Vertical Mounting Bolt-4.7L	40	29	
Generator (long) Horizontal Mounting Bolt-4.7L	55	41	
Generator (short) Horizontal Mounting Bolt-4.7L	55	41	
Generator B+ Terminal Nut	11		95

BATTERY TEMPERATURE SENSOR

DESCRIPTION

The Battery Temperature Sensor (BTS) is attached to the battery tray located under the battery.

OPERATION

The BTS is used to determine the battery temperature and control battery charging rate. This temperature data, along with data from monitored line voltage, is used by the PCM to vary the battery charging rate. System voltage will be higher at colder temperatures and is gradually reduced at warmer temperatures.

The PCM sends 5 volts to the sensor and is grounded through the sensor return line. As temperature increases, resistance in the sensor decreases and the detection voltage at the PCM increases.

The BTS is also used for OBD II diagnostics. Certain faults and OBD II monitors are either enabled or disabled, depending upon BTS input (for example, disable purge and enable Leak Detection Pump (LDP) and O2 sensor heater tests). Most OBD II monitors are disabled below 20 degrees F.

REMOVAL

The battery temperature sensor is located under the vehicle battery (Fig. 1) and is attached to a mounting hole on the battery tray.

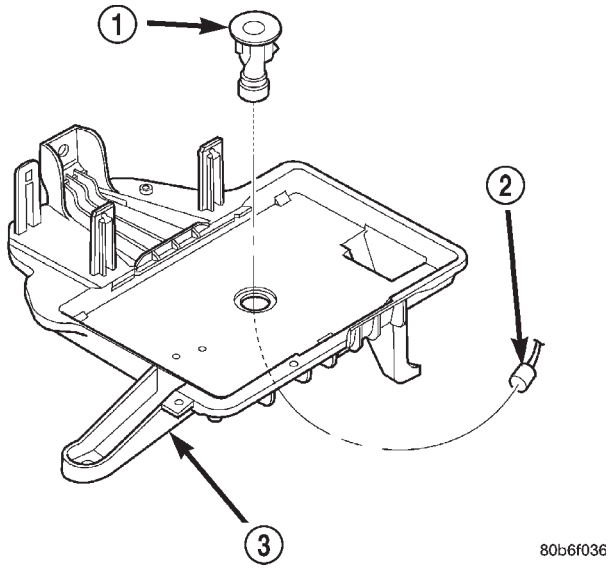

Fig. 1 Battery Temperature Sensor Location

1 - BATTERY TEMPERATURE SENSOR
2 - ENGINE WIRE HARNESS
3 - BATTERY TRAY

The battery temperature sensor is located under the vehicle battery (Fig. 1) and is attached to a mounting hole on the battery tray.

(1) Remove battery. Refer to Group 8A, Battery for procedures.

(2) Remove battery tray.

(3) Pull sensor up from battery tray and disconnect engine wire harness.

(4) Remove sensor from battery tray.

INSTALLATION

The battery temperature sensor is located under the vehicle battery (Fig. 1) and is attached to a mounting hole on the battery tray.

(1) Position sensor into mounting hole and attach wiring harness.

(2) Press sensor into top of battery tray.

(3) Install battery. Refer to Group 8A, Battery for procedures.

GENERATOR

DESCRIPTION

The generator is belt-driven by the engine using a serpentine type drive belt. It is serviced only as a complete assembly. If the generator fails for any reason, the entire assembly must be replaced.

OPERATION

As the energized rotor begins to rotate within the generator, the spinning magnetic field induces a current into the windings of the stator coil. Once the generator begins producing sufficient current, it also provides the current needed to energize the rotor.

The Y type stator winding connections deliver the induced AC current to 3 positive and 3 negative diodes for rectification. From the diodes, rectified DC current is delivered to the vehicle electrical system through the generator battery terminal.

Although the generators appear the same externally, different generators with different output ratings are used on this vehicle. Be certain that the replacement generator has the same output rating and part number as the original unit. Refer to Generator Ratings in the Specifications section at the back of this group for amperage ratings and part numbers.

Noise emitting from the generator may be caused by: worn, loose or defective bearings; a loose or defective drive pulley; incorrect, worn, damaged or misadjusted fan drive belt; loose mounting bolts; a misaligned drive pulley or a defective stator or diode.

GENERATOR (Continued)

REMOVAL

WARNING: DISCONNECT NEGATIVE CABLE FROM BATTERY BEFORE REMOVING BATTERY OUTPUT WIRE (B+ WIRE) FROM GENERATOR. FAILURE TO DO SO CAN RESULT IN INJURY OR DAMAGE TO ELECTRICAL SYSTEM.

(1) Disconnect negative battery cable at battery.

(2) Remove generator drive belt. Refer to Cooling System for procedure.

(3) Unsnap cable protector cover from B+ mounting stud (Fig. 2).

(4) Disconnect (unsnap) 2–wire field connector at rear of generator (Fig. 2).

(5) Remove generator mounting bolts (Fig. 3) or (Fig. 4).

(6) Remove generator from vehicle.

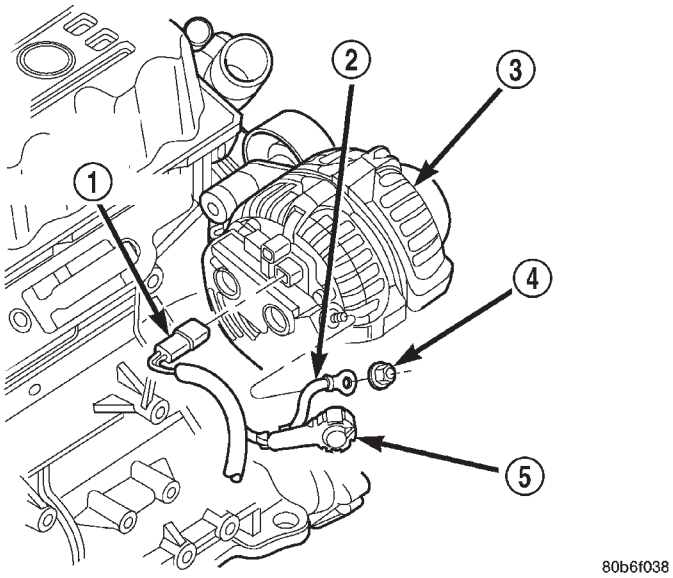

Fig. 2 Generator B+ Cable and Field Wire Connections (Typical—4.0L Engine Shown)

1 - FIELD WIRE CONNECTOR
2 - B+ CABLE
3 - GENERATOR
4 - B+ CABLE MOUNTING NUT
5 - CABLE PROTECTOR

INSTALLATION

(1) Position generator to engine and install mounting bolts.

(2) Tighten generator mounting bolts as follows:

- Vertical mounting bolt 4.7L engine—40 N·m (29 ft. lbs.)
- Long horizontal mounting bolt 4.7L engine—55 N·m (41 ft. lbs.)
- Short horizontal mounting bolt 4.7L engine—55 N·m (41 ft. lbs.)

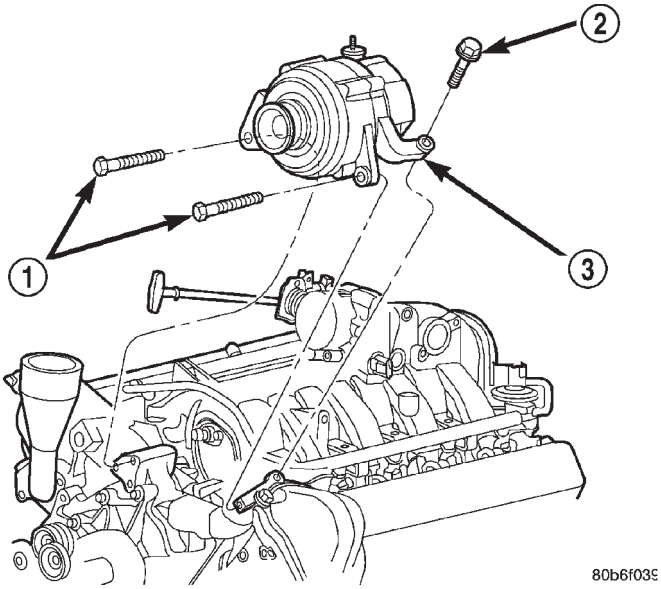

Fig. 3 Remove/Install Generator—4.7L V-8 Engine

1 - LOWER BOLTS
2 - REAR BOLT
3 - GENERATOR

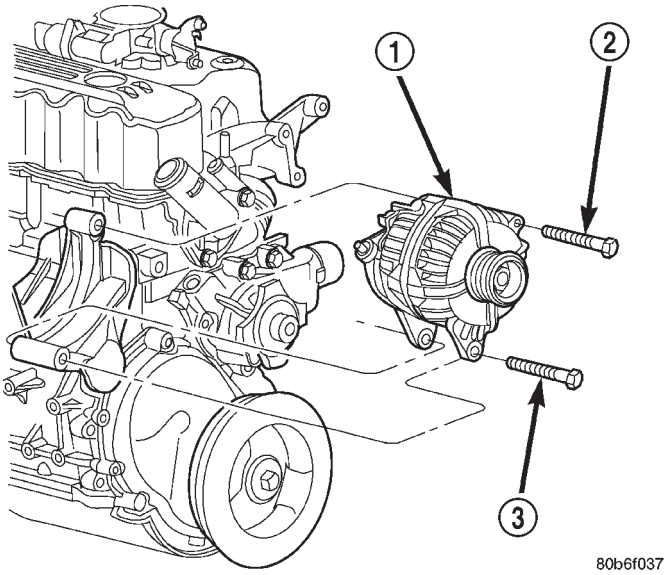

Fig. 4 Remove/Install Generator—4.0L 6–Cylinder Engine

1 - GENERATOR
2 - UPPER BOLT
3 - LOWER BOLT

- Generator mounting bolts 4.0L engine—55 N·m (41 ft. lbs.)
- B+ terminal nut—11 N·m (95 in. lbs.)

(3) Snap 2–wire field connector into rear of generator.

(4) Snap cable protector cover to B+ mounting stud.

GENERATOR (Continued)

CAUTION: Never force a belt over a pulley rim using a screwdriver. The synthetic fiber of the belt can be damaged.

CAUTION: When installing a serpentine accessory drive belt, the belt MUST be routed correctly. The water pump will be rotating in the wrong direction if the belt is installed incorrectly, causing the engine to overheat. Refer to belt routing label in engine compartment, or refer to Belt Schematics in 7, Cooling System.

(5) Install generator drive belt. Refer to 7, Cooling System for procedure.

(6) Install negative battery cable to battery.

VOLTAGE REGULATOR

DESCRIPTION

The Electronic Voltage Regulator (EVR) is not a separate component. It is actually a voltage regulating circuit located within the Powertrain Control Module (PCM). The EVR is not serviced separately. If replacement is necessary, the PCM must be replaced.

OPERATION

The amount of DC current produced by the generator is controlled by EVR circuitry contained within the PCM. This circuitry is connected in series with the generators second rotor field terminal and its ground.

Voltage is regulated by cycling the ground path to control the strength of the rotor magnetic field. The EVR circuitry monitors system line voltage (B+) and battery temperature (refer to Battery Temperature Sensor for more information). It then determines a target charging voltage. If sensed battery voltage is 0.5 volts or lower than the target voltage, the PCM grounds the field winding until sensed battery voltage is 0.5 volts above target voltage. A circuit in the PCM cycles the ground side of the generator field up to 100 times per second (100Hz), but has the capability to ground the field control wire 100% of the time (full field) to achieve the target voltage. If the charging rate cannot be monitored (limp-in), a duty cycle of 25% is used by the PCM in order to have some generator output. Also refer to Charging System Operation for additional information.

STARTING

TABLE OF CONTENTS

page

STARTING
DESCRIPTION 33
OPERATION. 34
DIAGNOSIS AND TESTING 34
STARTING SYSTEM. 34
SPECIFICATIONS 39
STARTER MOTOR
DESCRIPTION 39
OPERATION. 39
DIAGNOSIS AND TESTING 40
STARTER MOTOR 40
REMOVAL 40
INSTALLATION. 41
STARTER MOTOR RELAY
DESCRIPTION 42
OPERATION. 42
DIAGNOSIS AND TESTING 42
STARTER RELAY 42
REMOVAL 43
INSTALLATION. 44

STARTING

DESCRIPTION

An electrically operated engine starting system is standard factory-installed equipment on this model. The starting system is designed to provide the vehicle operator with a convenient, efficient and reliable means of cranking and starting the internal combustion engine used to power the vehicle and all of its accessory systems from within the safe and secure confines of the passenger compartment. See the owner's manual in the vehicle glove box for more information and instructions on the recommended use and operation of the factory-installed starting system.

The starting system consists of the following components:

- Battery
- Starter relay
- Starter motor (including an integral starter solenoid)
- Ignition switch
- Park/neutral position switch
- Wire harnesses and connections (including the battery cables).

This group provides complete service information for the starter motor and the starter relay. Complete service information for the other starting system components can be located as follows:

- Refer to **Battery** in the proper section of Group 8A - Battery for complete service information for the battery.
- Refer to **Ignition Switch and Key Lock Cylinder** in the proper section of Group 8D - Ignition System for complete service information for the ignition switch.
- Refer to **Park/Neutral Position Switch** in the proper section of Group 21 - Transmission for complete service information for the park/neutral position switch.
- Refer to the proper section of **Group 8W - Wiring Diagrams** for complete service information and circuit diagrams for the starting system wiring components.

Group 8A covers the Battery, Group 8B covers the Starting Systems, and Group 8C covers the Charging System. We have separated these systems to make it easier to locate the information you are seeking within this Service Manual. However, when attempting to diagnose any of these systems, it is important that you keep their interdependency in mind.

The battery, starting, and charging systems in the vehicle operate with one another, and must be tested as a complete system. In order for the vehicle to start and charge properly, all of the components that are used in these systems must perform within specifications.

The diagnostic procedures used in each of these groups include the most basic conventional diagnostic methods, to the more sophisticated On-Board Diagnostics (OBD) built into the Powertrain Control Module (PCM). Use of an induction-type milliampere ammeter, volt/ohmmeter, battery charger, carbon pile rheostat (load tester), and 12-volt test lamp may be required.

All OBD-sensed systems are monitored by the PCM. Each monitored circuit is assigned a Diagnostic Trouble Code (DTC). The PCM will store a DTC in electronic memory for any failure it detects. Refer to **On-Board Diagnostic Test For Charging System** in the Diagnosis and Testing section of Group 8C - Charging System for more information.

STARTING (Continued)

OPERATION

The starting system components form two separate circuits. A high-amperage feed circuit that feeds the starter motor between 150 and 350 amperes, and a low-amperage control circuit that operates on less than 20 amperes. The high-amperage feed circuit components include the battery, the battery cables, the contact disc portion of the starter solenoid, and the starter motor. The low-amperage control circuit components include the ignition switch, the park/neutral position switch, the starter relay, the electromagnetic windings of the starter solenoid, and the connecting wire harness components.

Battery voltage is supplied through the low-amperage control circuit to the coil battery terminal of the starter relay when the ignition switch is turned to the momentary Start position. The park/neutral position switch is installed in series between the starter relay coil ground terminal and ground. This normally open switch prevents the starter relay from being energized and the starter motor from operating unless the automatic transmission gear selector is in the Neutral or Park positions.

When the starter relay coil is energized, the normally open relay contacts close. The relay contacts connect the relay common feed terminal to the relay normally open terminal. The closed relay contacts energize the starter solenoid coil windings.

The energized solenoid pull-in coil pulls in the solenoid plunger. The solenoid plunger pulls the shift lever in the starter motor. This engages the starter overrunning clutch and pinion gear with the starter ring gear on the automatic transmission torque converter drive plate.

As the solenoid plunger reaches the end of its travel, the solenoid contact disc completes the high-amperage starter feed circuit and energizes the solenoid plunger hold-in coil. Current now flows between the solenoid battery terminal and the starter motor, energizing the starter.

Once the engine starts, the overrunning clutch protects the starter motor from damage by allowing the starter pinion gear to spin faster than the pinion shaft. When the driver releases the ignition switch to the On position, the starter relay coil is de-energized. This causes the relay contacts to open. When the relay contacts open, the starter solenoid plunger hold-in coil is de-energized.

When the solenoid plunger hold-in coil is de-energized, the solenoid plunger return spring returns the plunger to its relaxed position. This causes the contact disc to open the starter feed circuit, and the shift lever to disengage the overrunning clutch and pinion gear from the starter ring gear.

DIAGNOSIS AND TESTING - STARTING SYSTEM

The battery, starting, and charging systems operate with one another, and must be tested as a complete system. In order for the vehicle to start and charge properly, all of the components involved in these systems must perform within specifications.

Group 8A covers the Battery, Group 8B covers the Starting Systems, and Group 8C covers the Charging System. We have separated these systems to make it easier to locate the information you are seeking within this Service Manual. However, when attempting to diagnose any of these systems, it is important that you keep their interdependency in mind.

The diagnostic procedures used in these groups include the most basic conventional diagnostic methods, to the more sophisticated On-Board Diagnostics (OBD) built into the Powertrain Control Module (PCM). Use of an induction-type milliampere ammeter, volt/ohmmeter, battery charger, carbon pile rheostat (load tester), and 12-volt test lamp may be required.

All OBD-sensed systems are monitored by the PCM. Each monitored circuit is assigned a Diagnostic Trouble Code (DTC). The PCM will store a DTC in electronic memory for any failure it detects. Refer to **On-Board Diagnostic Test For Charging System** in the Diagnosis and Testing section of Group 8C - Charging System for more information.

STARTING (Continued)

Starting System Diagnosis		
CONDITION	POSSIBLE CAUSE	CORRECTION
STARTER FAILS TO OPERATE.	1. Battery discharged or faulty.	1. Refer to Battery in the Diagnosis and Testing section of Group 8A - Battery. Charge or replace the battery, if required.
	2. Starting circuit wiring faulty.	2. Refer to Starting System in Group 8W - Wiring Diagrams. Test and repair the starter feed and/or control circuits, if required.
	3. Starter relay faulty.	3. Refer to Starter Relay in the Diagnosis and Testing section of this group. Replace the starter relay, if required.
	4. Ignition switch faulty.	4. Refer to Ignition Switch and Key Lock Cylinder in the Diagnosis and Testing section of Group 8D - Ignition System. Replace the ignition switch, if required.
	5. Park/Neutral position switch faulty or misadjusted.	5. Refer to Park/Neutral Position Switch in the Diagnosis and Testing section of Group 21 - Transmission. Replace the park/neutral position switch, if required.
	6. Starter solenoid faulty.	6. Refer to Starter Motor in the Diagnosis and Testing section of this group. Replace the starter motor assembly, if required.
	7. Starter motor faulty.	7. If all other starting system components and circuits test OK, replace the starter motor assembly.
STARTER ENGAGES, FAILS TO TURN ENGINE.	1. Battery discharged or faulty.	1. Refer to Battery in the Diagnosis and Testing section of Group 8A - Battery. Charge or replace the battery, if required.
	2. Starting circuit wiring faulty.	2. Refer to Starting System in Group 8W - Wiring Diagrams. Test and repair the starter feed and/or control circuits, if required.
	3. Starter motor faulty.	3. If all other starting system components and circuits test OK, replace the starter motor assembly.
	4. Engine seized.	4. Refer to Engine Diagnosis in the Diagnosis and Testing section of Group 9 - Engine.
STARTER ENGAGES, SPINS OUT BEFORE ENGINE STARTS.	1. Starter ring gear faulty.	1. Refer to Starter Motor in the Removal and Installation section of this group. Remove the starter motor to inspect the starter ring gear. Replace the starter ring gear, if required.
	2. Starter motor faulty.	2. If all other starting system components and circuits test OK, replace the starter motor assembly.
STARTER DOES NOT DISENGAGE.	1. Starter motor improperly installed.	1. Refer to Starter Motor in the Removal and Installation section of this group. Tighten the starter mounting hardware to the correct tightness specifications.
	2. Starter relay faulty.	2. Refer to Starter Relay in the Diagnosis and Testing section of this group. Replace the starter relay, if required.
	3. Ignition switch faulty.	3. Refer to Ignition Switch and Key Lock Cylinder in the Diagnosis and Testing section of Group 8D - Ignition System. Replace the ignition switch, if required.
	4. Starter motor faulty.	4. If all other starting system components and circuits test OK, replace the starter motor assembly.

STARTING (Continued)

INSPECTION

For complete circuit diagrams, refer to **Starting System** in the Contents of Group 8W - Wiring Diagrams. Before removing any unit from the starting system for repair or diagnosis, perform the following inspections:

WARNING: ON VEHICLES EQUIPPED WITH AIRBAGS, REFER TO GROUP 8M - PASSIVE RESTRAINT SYSTEMS BEFORE ATTEMPTING ANY STEERING WHEEL, STEERING COLUMN, OR INSTRUMENT PANEL COMPONENT DIAGNOSIS OR SERVICE. FAILURE TO TAKE THE PROPER PRECAUTIONS COULD RESULT IN ACCIDENTAL AIRBAG DEPLOYMENT AND POSSIBLE PERSONAL INJURY.

- **Battery** - Visually inspect the battery for indications of physical damage and loose or corroded cable connections. Determine the state-of-charge and cranking capacity of the battery. Charge or replace the battery, if required. Refer to **Battery** in the proper section of Group 8A - Battery for complete service information for the battery.
- **Ignition Switch** - Visually inspect the ignition switch for indications of physical damage and loose or corroded wire harness connections. Refer to **Ignition Switch and Key Lock Cylinder** in the proper section of Group 8D - Ignition System for complete service information for the ignition switch.
- **Park/Neutral Position Switch** - Visually inspect the park/neutral position switch for indications of physical damage and loose or corroded wire harness connections. Refer to **Park/Neutral Position Switch** in the proper section of Group 21 - Transmission for complete service information for the park/neutral position switch.
- **Starter Relay** - Visually inspect the starter relay for indications of physical damage and loose or corroded wire harness connections.
- **Starter Motor** - Visually inspect the starter motor for indications of physical damage and loose or corroded wire harness connections.
- **Starter Solenoid** - Visually inspect the starter solenoid for indications of physical damage and loose or corroded wire harness connections.
- **Wiring** - Visually inspect the wire harnesses for damage. Repair or replace any faulty wiring, as required. Refer to the proper section of **Group 8W - Wiring Diagrams** for complete service information and circuit diagrams for the starting system wiring components.

TESTING

COLD CRANKING TEST

For complete circuit diagrams, refer to **Starting System** in the Contents of Group 8W - Wiring Diagrams. The battery must be fully-charged and load-tested before proceeding. Refer to **Battery** in the Diagnosis and Testing section of Group 8A - Battery for the procedures.

(1) Connect a suitable volt-ampere tester to the battery terminals (Fig. 1). See the instructions provided by the manufacturer of the volt-ampere tester being used.

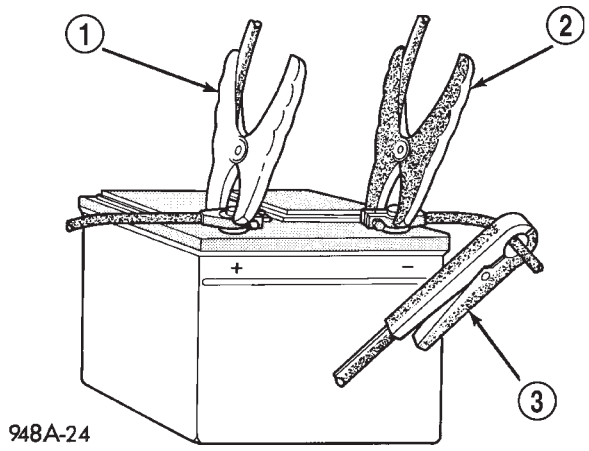

Fig. 1 Volts-Amps Tester Connections - Typical

1 - POSITIVE CLAMP
2 - NEGATIVE CLAMP
3 - INDUCTION AMMETER CLAMP

(2) Fully engage the parking brake.

(3) Place the automatic transmission gearshift selector lever in the Park position.

(4) Verify that all lamps and accessories are turned off.

(5) To prevent the engine from starting, remove the Automatic ShutDown (ASD) relay. The ASD relay is located in the Power Distribution Center (PDC), in the engine compartment. Refer to the fuse and relay layout label affixed to the underside of the PDC cover for ASD relay identification and location.

(6) Rotate and hold the ignition switch in the Start position. Note the cranking voltage and current (amperage) draw readings shown on the volt-ampere tester.

(a) If the voltage reads below 9.6 volts, refer to **Starter Motor** in the Diagnosis and Testing section of this group. If the starter motor is OK, refer

STARTING (Continued)

to **Engine Diagnosis** in the Diagnosis and Testing section of Group 9 - Engine for further testing of the engine. If the starter motor is not OK, replace the faulty starter motor.

(b) If the voltage reads above 9.6 volts and the current (amperage) draw reads below specifications, refer to **Feed Circuit Test** in this section.

(c) If the voltage reads 12.5 volts or greater and the starter motor does not turn, refer to **Control Circuit Testing** in this section.

(d) If the voltage reads 12.5 volts or greater and the starter motor turns very slowly, refer to **Feed Circuit Test** in this section.

NOTE: A cold engine will increase the starter current (amperage) draw reading, and reduce the battery voltage reading.

FEED CIRCUIT TEST

The starter feed circuit test (voltage drop method) will determine if there is excessive resistance in the high-amperage feed circuit. For complete circuit diagrams, refer to **Starting System** in the Contents of Group 8W - Wiring Diagrams.

When performing these tests, it is important to remember that the voltage drop is giving an indication of the resistance between the two points at which the voltmeter probes are attached.

Example: When testing the resistance of the battery positive cable, touch the voltmeter leads to the battery positive cable clamp and the cable connector at the starter solenoid. If you probe the battery positive terminal post and the cable connector at the starter solenoid, you are reading the combined voltage drop in the battery positive cable clamp-to-terminal post connection and the battery positive cable.

The following operation will require a voltmeter accurate to 1/10 (0.10) volt. Before performing the tests, be certain that the following procedures are accomplished:

- Battery is fully-charged and load-tested. Refer to **Battery** in the Diagnosis and Testing section of Group 8A - Battery for the procedures.
- Fully engage the parking brake.
- Place the automatic transmission gearshift selector lever in the Park position.
- Verify that all lamps and accessories are turned off.
- To prevent the engine from starting, remove the Automatic ShutDown (ASD) relay. The ASD relay is located in the Power Distribution Center (PDC), in the engine compartment. Refer to the fuse and relay layout label affixed to the underside of the PDC cover for ASD relay identification and location.

(1) Connect the positive lead of the voltmeter to the battery negative terminal post. Connect the negative lead of the voltmeter to the battery negative cable clamp (Fig. 2). Rotate and hold the ignition switch in the Start position. Observe the voltmeter. If voltage is detected, correct the poor contact between the cable clamp and the terminal post.

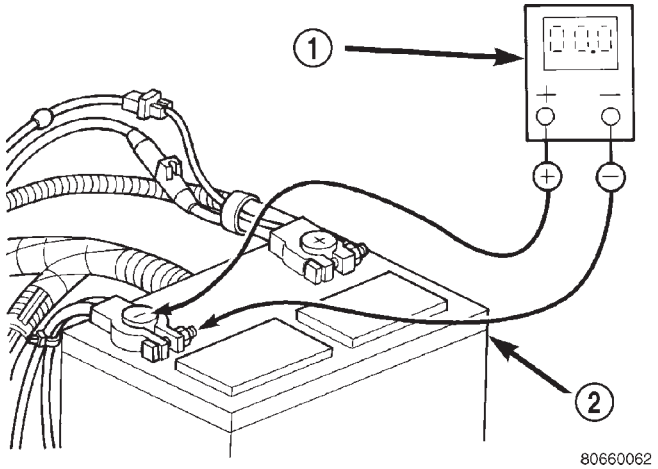

Fig. 2 Test Battery Negative Connection Resistance - Typical

1 - VOLTMETER
2 - BATTERY

(2) Connect the positive lead of the voltmeter to the battery positive terminal post. Connect the negative lead of the voltmeter to the battery positive cable clamp (Fig. 3). Rotate and hold the ignition switch in the Start position. Observe the voltmeter. If voltage is detected, correct the poor contact between the cable clamp and the terminal post.

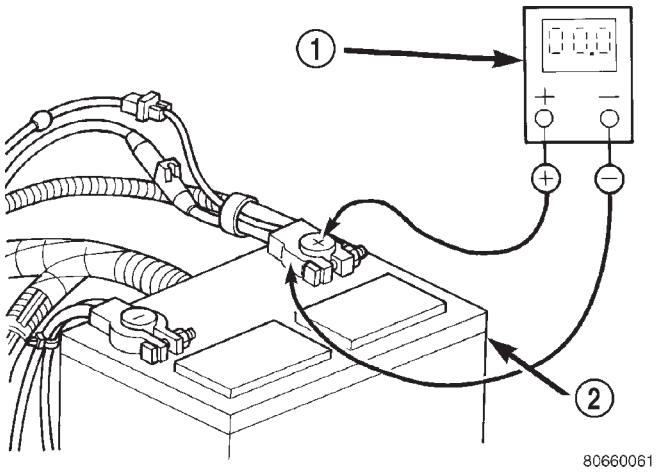

Fig. 3 Test Battery Positive Connection Resistance - Typical

1 - VOLTMETER
2 - BATTERY

(3) Connect the voltmeter to measure between the battery positive terminal post and the starter sole-

STARTING (Continued)

noid battery terminal stud (Fig. 4). Rotate and hold the ignition switch in the Start position. Observe the voltmeter. If the reading is above 0.2 volt, clean and tighten the battery cable connection at the solenoid. Repeat the test. If the reading is still above 0.2 volt, replace the faulty battery positive cable.

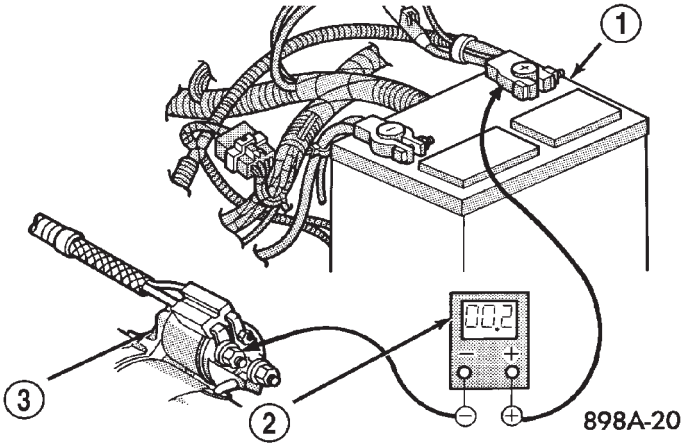

Fig. 4 Test Battery Positive Cable Resistance - Typical

1 - BATTERY
2 - VOLTMETER
3 - STARTER MOTOR

(4) Connect the voltmeter to measure between the battery negative terminal post and a good clean ground on the engine block (Fig. 5). Rotate and hold the ignition switch in the Start position. Observe the voltmeter. If the reading is above 0.2 volt, clean and tighten the battery negative cable attachment on the engine block. Repeat the test. If the reading is still above 0.2 volt, replace the faulty battery negative cable.

(5) Connect the positive lead of the voltmeter to the starter housing. Connect the negative lead of the voltmeter to the battery negative terminal post (Fig. 6). Rotate and hold the ignition switch in the Start position. Observe the voltmeter. If the reading is above 0.2 volt, correct the poor starter to engine block ground contact.

If the resistance tests detect no feed circuit problems, refer to **Starter Motor** in the Diagnosis and Testing section of this group.

CONTROL CIRCUIT TESTING

The starter control circuit components should be tested in the order in which they are listed, as follows:

- **Starter Relay** - Refer to **Starter Relay** in the Diagnosis and Testing section of this group for the procedures.

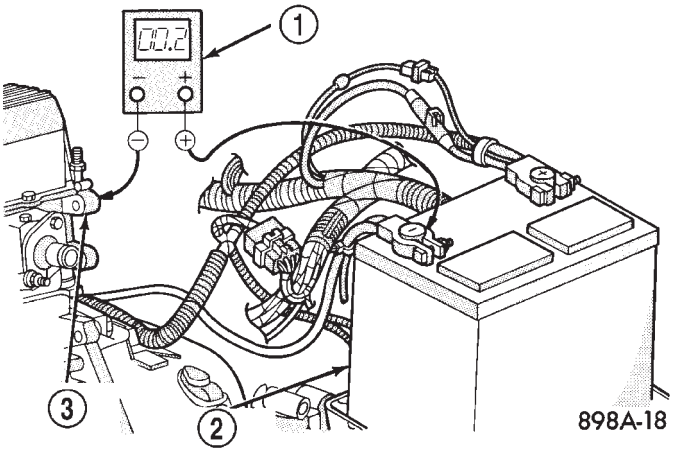

Fig. 5 Test Ground Circuit

1 - VOLTMETER
2 - BATTERY
3 - ENGINE GROUND

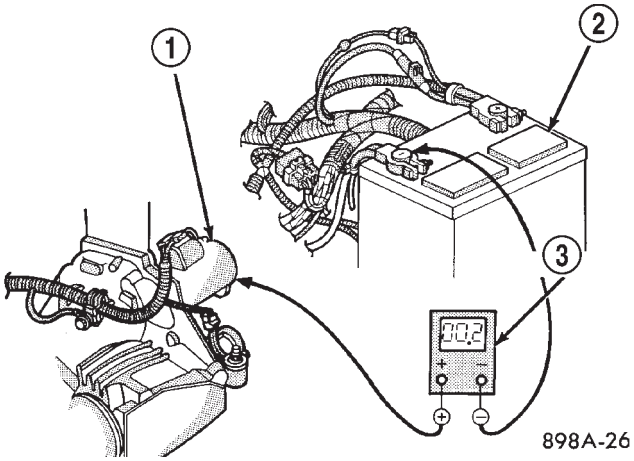

Fig. 6 Test Starter Ground - Typical

1 - STARTER MOTOR
2 - BATTERY
3 - VOLTMETER

- **Starter Solenoid** - Refer to **Starter Motor** in the Diagnosis and Testing section of this group for the procedures.
- **Ignition Switch** - Refer to **Ignition Switch and Key Lock Cylinder** in the Diagnosis and Testing section of Group 8D - Ignition System for the procedures.
- **Park/Neutral Position Switch** - Refer to **Park/Neutral Position Switch** in the Diagnosis and Testing section of Group 21 - Transmission for the procedures.
- **Wire harnesses and connections** - Refer to **Starting System** in the Contents of Group 8W - Wiring Diagrams for complete circuit diagrams.

SPECIFICATIONS

TORQUE - STARTER

DESCRIPTION	N-m	Ft. Lbs.	In. Lbs.
Stater Motor (B+) Terminal (Diesel)	27	20	—
Stater Motor (B+) Terminal (Except Diesel)	11.3	—	100
Starter Motor Retaining Bolts (Diesel)	27	20	—
Starter Motor Retaining Bolt (Forward Facing 4.0L)	41	30	—
Starter Motor Retaining Bolt (Forward Facing 4.7L)	54	40	—
Starter Motor Retaining Bolt (Rearward Facing 4.7L)	54	40	—

STARTER MOTOR - GAS POWERED

Starter Motor and Solenoid	
Manufacturer	Mitsubishi
Engine Application	4.0L/4.7L
Power Rating	1.4 Kilowatt (1.9 Horsepower)
Voltage	12 Volts
Number of Fields	4
Number of Poles	4
Number of Brushes	4
Drive Type	Planetary Gear Reduction
Free Running Test Voltage	11.2 Volts
Free Running Test Maximum Amperage Draw	90 Amperes
Free Running Test Minimum Speed	2400 rpm
Solenoid Closing Maximum Voltage Required	7.8 Volts
*Cranking Amperage Draw Test	160 Amperes
*Test at operating temperature. Cold engine, tight (new) engine, or heavy oil will increase starter amperage draw.	

STARTER MOTOR

DESCRIPTION

The starter motors used for both the 4.0L and the 4.7L engines available in this model are very similar, but are not interchangeable. Both starter motors are mounted with two screws to the automatic transmission torque converter housing and are located on the right side of the engine.

Each of these starter motors incorporates several of the same features to create a reliable, efficient, compact, lightweight and powerful unit. The electric motors of both starters feature four electromagnetic field coils wound around four pole shoes, and four brushes contact the motor commutator. Both starter motors are rated at 1.4 kilowatts (about 1.9 horsepower) output at 12 volts.

Both of these starter motors are serviced only as a unit with their starter solenoids, and cannot be repaired. If either component is faulty or damaged, the entire starter motor and starter solenoid unit must be replaced.

OPERATION

These starter motors are equipped with a planetary gear reduction (intermediate transmission) system. The planetary gear reduction system consists of a gear that is integral to the output end of the electric motor armature shaft that is in continual engagement with a larger gear that is splined to the input end of the starter pinion gear shaft. This feature makes it possible to reduce the dimensions of the starter. At the same time, it allows higher armature rotational speed and delivers increased torque

STARTER MOTOR (Continued)

through the starter pinion gear to the starter ring gear.

The starter motors for both engines are activated by an integral heavy duty starter solenoid switch mounted to the overrunning clutch housing. This electromechanical switch connects and disconnects the feed of battery voltage to the starter motor and actuates a shift fork that engages and disengages the starter pinion gear with the starter ring gear.

Both starter motors use an overrunning clutch and starter pinion gear unit to engage and drive a starter ring gear that is integral to the torque converter drive plate mounted on the rear crankshaft flange.

DIAGNOSIS AND TESTING - STARTER MOTOR

Correct starter motor operation can be confirmed by performing the following free running bench test. This test can only be performed with the starter motor removed from the vehicle. Refer to **Starting System** in the Specifications section of this group for the starter motor specifications.

(1) Remove the starter motor from the vehicle. Refer to **Starter Motor** in the Removal and Installation section of this group for the procedures.

(2) Mount the starter motor securely in a soft-jawed bench vise. The vise jaws should be clamped on the mounting flange of the starter motor. Never clamp on the starter motor by the field frame.

(3) Connect a suitable volt-ampere tester and a 12-volt battery to the starter motor in series, and set the ammeter to the 100 ampere scale. See the instructions provided by the manufacturer of the volt-ampere tester being used.

(4) Install a jumper wire from the solenoid terminal to the solenoid battery terminal. The starter motor should operate. If the starter motor fails to operate, replace the faulty starter motor assembly.

(5) Adjust the carbon pile load of the tester to obtain the free running test voltage. Refer to **Starting System** in the Specifications section of this group for the starter motor free running test voltage specifications.

(6) Note the reading on the ammeter and compare this reading to the free running test maximum amperage draw. Refer to **Starting System** in the Specifications section of this group for the starter motor free running test maximum amperage draw specifications.

(7) If the ammeter reading exceeds the maximum amperage draw specification, replace the faulty starter motor assembly.

STARTER SOLENOID

This test can only be performed with the starter motor removed from the vehicle.

(1) Remove the starter motor from the vehicle. Refer to **Starter Motor** in the Removal and Installation section of this group for the procedures.

(2) Disconnect the wire from the solenoid field coil terminal.

(3) Check for continuity between the solenoid terminal and the solenoid field coil terminal with a continuity tester (Fig. 7). There should be continuity. If OK, go to Step 4. If not OK, replace the faulty starter motor assembly.

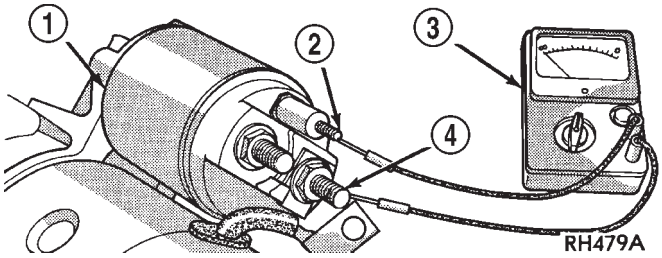

Fig. 7 Continuity Test Between Solenoid Terminal and Field Coil Terminal - Typical

1 - SOLENOID
2 - SOLENOID TERMINAL
3 - OHMMETER
4 - FIELD COIL TERMINAL

(4) Check for continuity between the solenoid terminal and the solenoid case (Fig. 8). There should be continuity. If not OK, replace the faulty starter motor assembly.

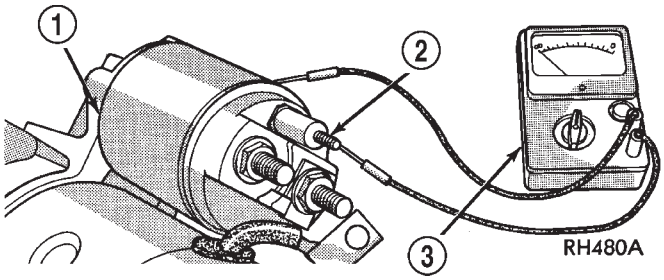

Fig. 8 Continuity Test Between Solenoid Terminal

1 - SOLENOID
2 - SOLENOID TERMINAL
3 - OHMMETER

REMOVAL

(1) Disconnect and isolate the battery negative cable.

(2) Raise and support the vehicle.

(3) Remove the lower (forward facing) mounting screw securing the starter motor to the automatic transmission torque converter housing (Fig. 9) or (Fig. 10).

(4) While supporting the starter motor with one hand, use the other hand to remove the upper (rear

STARTER MOTOR (Continued)

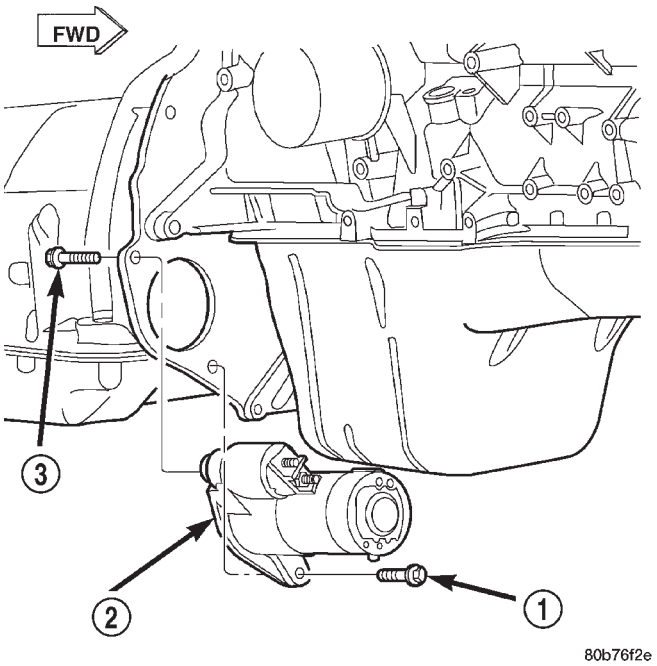

Fig. 9 Starter Motor Remove/Install - 4.0L Engine

1 - SCREW
2 - STARTER MOTOR
3 - SCREW

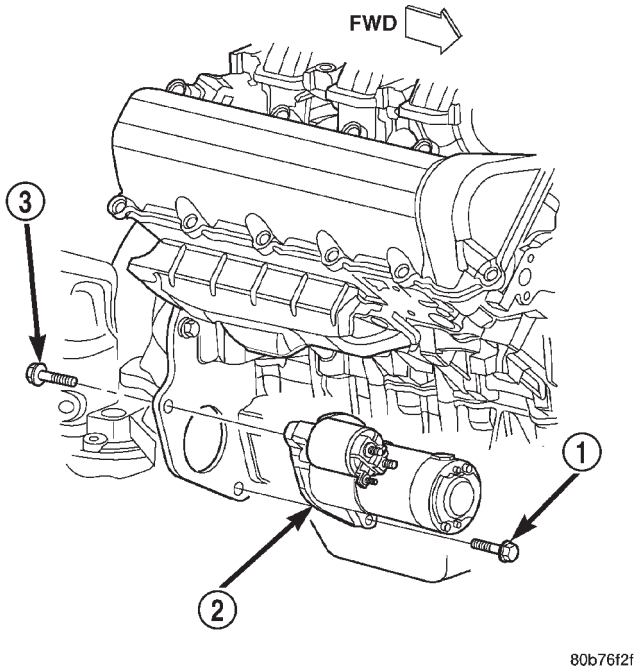

Fig. 10 Starter Motor Remove/Install - 4.7L Engine

1 - SCREW
2 - STARTER MOTOR
3 - SCREW

facing) mounting screw securing the starter motor to the automatic transmission torque converter housing.

(5) Lower the starter motor from the front of the automatic transmission torque converter housing far enough to access and remove the nut that secures the battery cable eyelet to the solenoid battery terminal (Fig. 11) or (Fig. 12). Always support the starter motor during this process, do not let the starter motor hang from the wire harness.

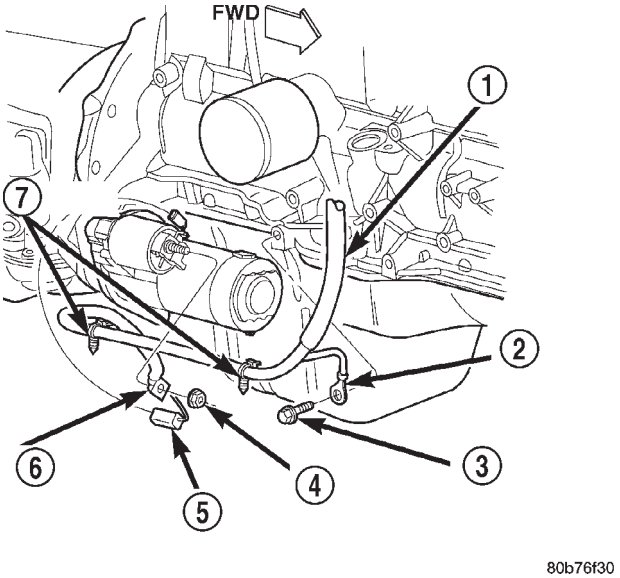

Fig. 11 Starter Wire Harness Remove/Install - 4.0L Engine

1 - BATTERY, STARTER AND GENERATOR WIRE HARNESS
2 - GROUND EYELET
3 - SCREW
4 - NUT
5 - SOLENOID TERMINAL CONNECTOR
6 - SOLENOID BATTERY TERMINAL EYELET
7 - RETAINERS

(6) Remove the battery cable eyelet from the solenoid battery terminal. Always support the starter motor during this process, do not let the starter motor hang from the wire harness.

(7) Disconnect the solenoid terminal wire harness connector from the connector receptacle on the starter solenoid. Always support the starter motor during this process, do not let the starter motor hang from the wire harness.

(8) Remove the starter motor from the engine compartment.

INSTALLATION

(1) Position the starter motor in the engine compartment.

(2) Reconnect the solenoid terminal wire harness connector to the connector receptacle on the starter solenoid. Always support the starter motor during this process, do not let the starter motor hang from the wire harness.

STARTER MOTOR (Continued)

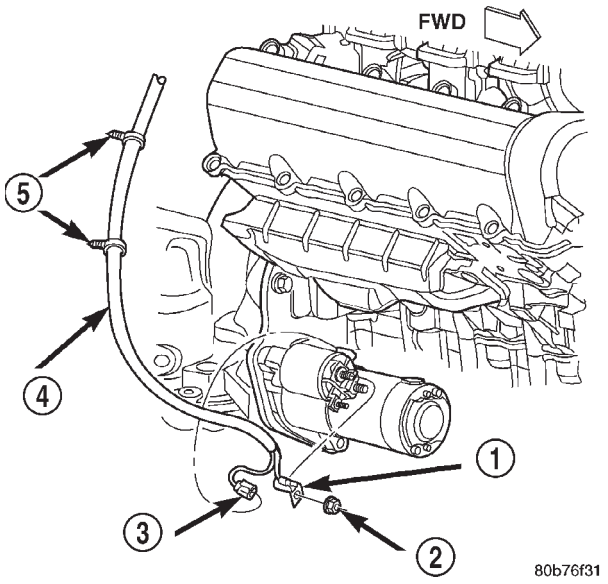

Fig. 12 Starter Wire Harness Remove/Install - 4.7L Engine

1 - SOLENOID BATTERY TERMINAL EYELET
2 - NUT
3 - SOLENOID TERMINAL CONNECTOR
4 - BATTERY STARTER AND GENERATOR WIRE HARNESS
5 - RETAINERS

(3) Install the battery cable eyelet onto the solenoid battery terminal. Always support the starter motor during this process, do not let the starter motor hang from the wire harness.

(4) Install and tighten the nut that secures the battery cable eyelet to the solenoid battery terminal. Tighten the nut to 11.3 N·m (100 in. lbs.). Always support the starter motor during this process, do not let the starter motor hang from the wire harness.

(5) Position the starter motor to the front of the automatic transmission torque converter housing and loosely install both the upper and lower mounting screws.

(6) Tighten the lower (forward facing) starter motor mounting screw. On 4.0L engines, tighten the screw to 41 N·m (30 ft. lbs.). On 4.7L engines, tighten the screw to 54 N·m (40 ft. lbs.).

(7) Tighten the upper (rearward facing) starter mounting screw. Tighten the screw to 54 N·m (40 ft. lbs.).

(8) Lower the vehicle.

(9) Reconnect the battery negative cable.

STARTER MOTOR RELAY

DESCRIPTION

The starter relay is an electromechanical device that switches battery current to the pull-in coil of the starter solenoid when the ignition switch is turned to the Start position. The starter relay is located in the Power Distribution Center (PDC), in the engine compartment. See the fuse and relay layout label affixed to the inside surface of the PDC cover for starter relay identification and location.

The starter relay is a International Standards Organization (ISO) micro-relay. Relays conforming to the ISO specifications have common physical dimensions, current capacities, terminal patterns, and terminal functions. The ISO micro-relay terminal functions are the same as a conventional ISO relay. However, the ISO micro-relay terminal pattern (or footprint) is different, the current capacity is lower, and the physical dimensions are smaller than those of the conventional ISO relay.

The starter relay cannot be repaired or adjusted and, if faulty or damaged, it must be replaced.

OPERATION

The ISO relay consists of an electromagnetic coil, a resistor or diode, and three (two fixed and one movable) electrical contacts. The movable (common feed) relay contact is held against one of the fixed contacts (normally closed) by spring pressure. When the electromagnetic coil is energized, it draws the movable contact away from the normally closed fixed contact, and holds it against the other (normally open) fixed contact.

When the electromagnetic coil is de-energized, spring pressure returns the movable contact to the normally closed position. The resistor or diode is connected in parallel with the electromagnetic coil in the relay, and helps to dissipate voltage spikes that are produced when the coil is de-energized.

DIAGNOSIS AND TESTING - STARTER RELAY

The starter relay (Fig. 13) is located in the Power Distribution Center (PDC), in the engine compartment. Refer to the fuse and relay layout label affixed to the underside of the PDC cover for starter relay identification and location. For complete circuit diagrams, refer to **Starting System** in the Contents of Group 8W - Wiring Diagrams.

STARTER MOTOR RELAY (Continued)

(1) Remove the starter relay from the PDC. Refer to **Starter Relay** in the Removal and Installation section of this group for the procedures.

(2) A relay in the de-energized position should have continuity between terminals 87A and 30, and no continuity between terminals 87 and 30. If OK, go to Step 3. If not OK, replace the faulty relay.

(3) Resistance between terminals 85 and 86 (electromagnet) should be 75 ± 5 ohms. If OK, go to Step 4. If not OK, replace the faulty relay.

(4) Connect a battery to terminals 85 and 86. There should now be continuity between terminals 30 and 87, and no continuity between terminals 87A and 30. If OK, perform the Relay Circuit Test that follows. If not OK, replace the faulty relay.

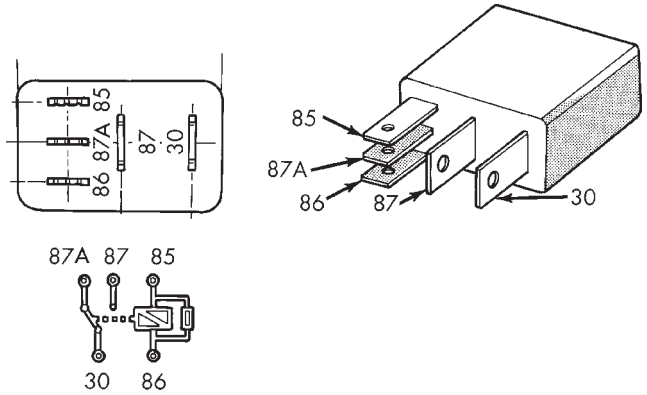

Fig. 13 Starter Relay

30 - COMMON FEED
85 - COIL GROUND
86 - COIL BATTERY
87 - NORMALLY OPEN
87A - NORMALLY CLOSED

RELAY CIRCUIT TEST

(1) The relay common feed terminal cavity (30) is connected to battery voltage and should be hot at all times. If OK, go to Step 2. If not OK, repair the open circuit to the fuse in the PDC as required.

(2) The relay normally closed terminal (87A) is connected to terminal 30 in the de-energized position, but is not used for this application. Go to Step 3.

(3) The relay normally open terminal (87) is connected to the common feed terminal (30) in the energized position. This terminal supplies battery voltage to the starter solenoid field coils. There should be continuity between the cavity for relay terminal 87 and the starter solenoid terminal at all times. If OK, go to Step 4. If not OK, repair the open circuit to the starter solenoid as required.

(4) The coil battery terminal (86) is connected to the electromagnet in the relay. It is energized when the ignition switch is held in the Start position. Check for battery voltage at the cavity for relay terminal 86 with the ignition switch in the Start position, and no voltage when the ignition switch is released to the On position. If OK, go to Step 5. If not OK, check for an open or short circuit to the ignition switch and repair, if required. If the circuit to the ignition switch is OK, refer to **Ignition Switch and Key Lock Cylinder** in the Diagnosis and Testing section of Group 8D - Ignition System for testing of the ignition switch.

(5) The coil ground terminal (85) is connected to the electromagnet in the relay. It is grounded through the park/neutral position switch only when the gearshift selector lever is in the Park or Neutral positions. Check for continuity to ground at the cavity for relay terminal 85. If not OK, check for an open or short circuit to the park/neutral position switch and repair, if required. If the circuit to the park/neutral position switch is OK, refer to **Park/Neutral Position Switch** in the Diagnosis and Testing section of Group 21 - Transmission for testing of the park/neutral position switch.

REMOVAL

(1) Disconnect and isolate the battery negative cable.

(2) Remove the cover from the Power Distribution Center (PDC) (Fig. 14).

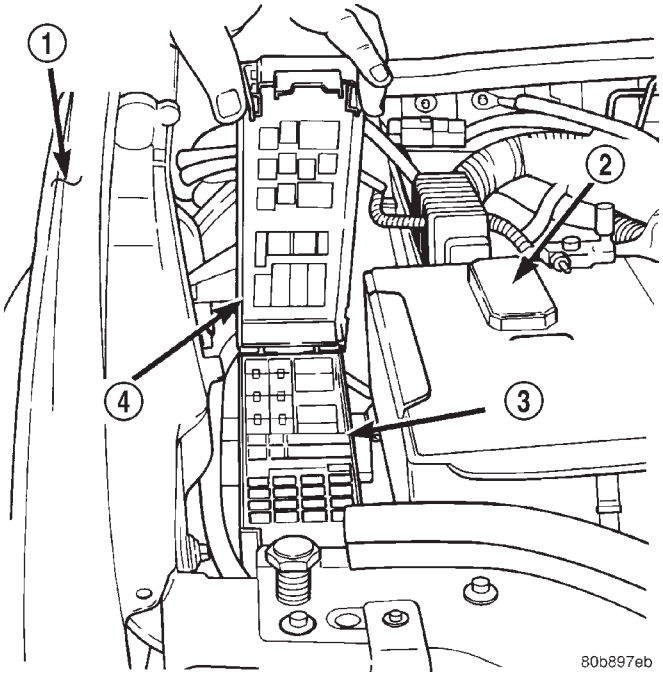

Fig. 14 Power Distribution Center

1 - RIGHT FENDER
2 - BATTERY
3 - POWER DISTRIBUTION CENTER
4 - COVER

STARTER MOTOR RELAY (Continued)

(3) See the fuse and relay layout label affixed to the underside of the PDC cover for starter relay identification and location.

(4) Remove the starter relay from the PDC.

INSTALLATION

(1) See the fuse and relay layout label affixed to the underside of the PDC cover for the proper starter relay location.

(2) Position the starter relay in the proper receptacle in the PDC.

(3) Align the starter relay terminals with the terminal cavities in the PDC receptacle.

(4) Push down firmly on the starter relay until the terminals are fully seated in the terminal cavities in the PDC receptacle.

(5) Install the cover onto the PDC.

(6) Reconnect the battery negative cable.

HEATED SYSTEMS

TABLE OF CONTENTS

page

HEATED MIRRORS 1
HEATED SEAT SYSTEM 3
HEATED GLASS 13

HEATED MIRRORS

TABLE OF CONTENTS

page

HEATED MIRRORS
DESCRIPTION 1
OPERATION 1
DIAGNOSIS AND TESTING 1
HEATED MIRRORS 1

HEATED MIRRORS

DESCRIPTION

Electrically heated outside rear view mirrors are optional equipment on this model. These mirrors feature an electric heating grid located behind the mirror glass of each power operated outside rear view mirror. These heating grids consist of a single resistor wire routed in a grid-like pattern and captured between two thin sheets of plastic. When electrical current is passed through the resistor wire, it produces enough heat energy to clear the outside mirror glass of ice, snow or fog. Battery current is directed to the outside mirror heating grid only when the rear window defogger switch is in the On position.

If the outside mirror heating grids and the rear window heating grid are all inoperative, (Refer to 8 - ELECTRICAL/HEATED GLASS - DIAGNOSIS AND TESTING - WINDOW DEFOGGER). If the outside mirror heating grids are inoperative, but the rear window heating grid is operating as designed, (Refer to 8 - ELECTRICAL/HEATED MIRRORS - DIAGNOSIS AND TESTING)

The heating grid behind each outside mirror glass cannot be repaired and, if faulty or damaged, the entire power mirror unit must be replaced. Refer to Power Mirrors for the procedures.

OPERATION

The outside mirror heating grids are energized and de-energized by the Driver Door Module (DDM) and the Passenger Door Module (PDM) based upon the rear window defogger switch status. The Body Control Module (BCM) monitors the rear window defogger switch. When the BCM receives an input from the switch, it sends a defogger switch status message to the DDM and the PDM over the Programmable Communications Interface data bus. The DDM and PDM respond to the defogger switch status messages by energizing or de-energizing the battery current feed to their respective outside rear view mirror heating grids.

DIAGNOSIS AND TESTING - HEATED MIRRORS

For circuit descriptions and diagrams, (Refer to Appropriate Wiring Information).

(1) If both mirror heaters are inoperative, check for proper operation of the Rear Window Defogger System. (Refer to 8 - ELECTRICAL/HEATED GLASS - DIAGNOSIS AND TESTING - WINDOW DEFOGGER). If Rear Window Defogger System operates correctly, or if only one mirror heater is inoperative, go to Step 2.

(2) Disconnect and isolate the battery negative cable. Remove the front door trim panel on the side of the inoperative mirror heater. Go to Step 3.

(3) Disconnect the door wire harness connector from the door module connector receptacle. Check for continuity between the mirror heater 12 volt supply, and the mirror heater ground. There should be continuity. If OK, go to Step 4. If not OK, check for continuity of the individual circuits between the power mirror and the door module, and of the mirror heater grid right at the power mirror.

HEATED MIRRORS (Continued)

(4) Use a DRB III® and (Refer to Appropriate Diagnostic Information) to test the door module and the PCI data bus.

HEATED SEAT SYSTEM

TABLE OF CONTENTS

	page
HEATED SEAT SYSTEM	
DESCRIPTION	3
OPERATION	4
DIAGNOSIS AND TESTING	4
HEATED SEAT SYSTEM	4
DRIVER HEATED SEAT SWITCH	
DESCRIPTION	5
OPERATION	5
DIAGNOSIS AND TESTING	5
HEATED SEAT SWITCH	5
REMOVAL	6
INSTALLATION	7
HEATED SEAT ELEMENT	
DESCRIPTION	7
OPERATION	7
DIAGNOSIS AND TESTING	7
HEATED SEAT ELEMENT	7
HEATED SEAT SENSOR	
DIAGNOSIS AND TESTING	9
HEATED SEAT SENSOR	9
PASSENGER HEATED SEAT SWITCH	
DESCRIPTION	10
OPERATION	10
DIAGNOSIS AND TESTING	10
HEATED SEAT SWITCH	10
REMOVAL	11
INSTALLATION	12

HEATED SEAT SYSTEM

DESCRIPTION

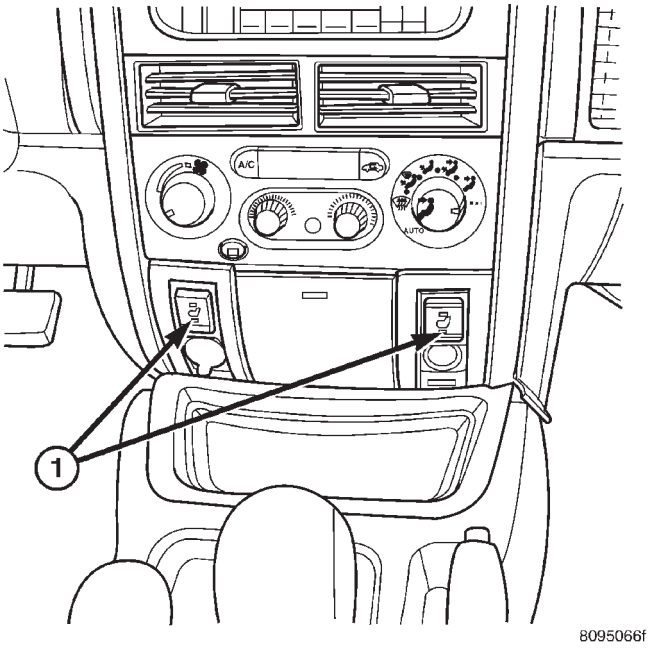

Fig. 1 HEATED SEAT SWITCHES

1 - SEAT HEATER SWITCHES

Individually controlled driver and passenger side electrically heated front seats are available factory-installed optional equipment on this model, when it is also equipped with the power seat option. The heated seat system allows both the driver and the front seat passenger the option to select one of two seat heating ranges, Low or High, or to turn the individual seat heaters Off using the heated seat switches located in the center lower bezel near the bottom of the instrument panel center stack (Fig. 1). The heated seat switch circuit operates on ignition switched battery current supplied through a fuse in the junction block, only when the ignition switch is in the On position.

This group covers the following components of the heated seat system:

- Heated seat elements and sensors
- Heated seat module (or memory heated seat module)
- Heated seat switches.

The heated seat system also relies upon resources shared with other electronic modules in the vehicle over the Programmable Communications Interface (PCI) data bus network. The PCI data bus network allows the sharing of sensor information. This helps to reduce wire harness complexity, internal controller hardware, and component sensor current loads. At the same time, this system provides increased reliability, enhanced diagnostics, and allows the addition of many new feature capabilities. For diagnosis of these electronic modules or of the PCI data bus network, the use of a DRB III® scan tool and the proper Diagnostic Procedures manual are recommended.

The electronic modules that may affect heated seat system operation are as follows:

- **Body Control Module (BCM)** - Refer to **Body Control Module** in Electronic Control Modules for more information.

HEATED SEAT SYSTEM (Continued)

- **Heated Seat Module (HSM)** - Refer to **Heated Seat Module** in Electronic Control Modules for more information.
- **Memory Heated Seat Module (MHSM)** - If the vehicle is equipped with the Memory System, refer to **Memory Seat Module** in Electronic Control Modules for more information.

Refer to **Power Seats Premium I/III** in the Contents of Wiring Diagrams for complete circuit diagrams. Following are general descriptions of the major components in the heated seat system.

OPERATION

The heated seat system will only operate when the ignition switch is in the On position, and the surface temperature at the front seat heating element sensors is below the designed temperature set points of the system. The heated seat system will not operate in ambient temperatures greater than about 41° C (105° F). The front seat heating elements and sensors are hard wired to the Heated Seat Module (HSM) or the Memory Heated Seat Module (MHSM).

The heated seat switches are hard wired to the Body Control Module (BCM). The BCM monitors the heated seat switch inputs, then sends heated seat switch status messages to the HSM or MHSM over the Programmable Communications Interface (PCI) data bus. The HSM or MHSM contains the control logic for the heated seat system. The HSM or MHSM responds to the heated seat switch status messages, ignition switch status messages, and the front seat heating element sensor inputs by controlling the output to the front seat heating elements through integral solid-state relays.

When a seat heater is turned on, the sensor located on the seat cushion electric heater element provides the HSM or MHSM with an input indicating the surface temperature of the seat cushion. If the surface temperature input is below the temperature set point for the selected Low or High heated seat switch position, the HSM or MHSM energizes the integral solid-state relay, which supplies battery current to the heating elements in the seat cushion and back. When the sensor input indicates the correct temperature set point has been achieved, the HSM or MHSM de-energizes the solid-state relay. The HSM or MHSM will continue to cycle the solid-state relay as needed to maintain the temperature set point.

The HSM or MHSM and the seat heater elements operate on non-switched battery current supplied through the power seat circuit breaker in the junction block. However, the HSM or MHSM will automatically turn off the heating elements if it detects an open in the sensor circuit, a short in the heating element circuit causing an excessive current draw, or when the ignition switch is turned to the Off position.

See the owner's manual in the vehicle glove box for more information on the features, use and operation of the heated seat system.

DIAGNOSIS & TESTING - HEATED SEAT SYSTEM

Following are tests that will help to diagnose the components and circuits that are hard wired inputs or outputs of the heated seat system. However, these tests may not prove conclusive in the diagnosis of this system. In order to obtain conclusive testing of the heated seat system, the Programmable Communications Interface (PCI) data bus network and all of the electronic modules that provide inputs to, or receive outputs from the heated seat system components must be checked.

The most reliable, efficient, and accurate means to diagnose the heated seat system requires the use of a DRB scan tool and the proper Diagnostic Procedures manual. The DRB III® scan tool can provide confirmation that the PCI data bus is functional, that all of the electronic modules are sending and receiving the proper messages on the PCI data bus, and that the Heated Seat Module (HSM) or Memory Heated Seat Module (MHSM) is receiving the proper hard wired inputs and relaying the proper hard wired outputs to perform its heated seat system functions.

For complete circuit diagrams, refer to **Power Seats Premium I/III** in Wiring Diagrams.

NOTE: DO NOT ATTEMPT TO SWAP MEMORY OR NON-MEMORY HEATED SEAT MODULES FROM ONE VEHICLE TO ANOTHER. MOST OF THESE MODULES ARE VEHICLE FEATURE SPECIFIC AND THEREFORE NOT INTERCHANGEABLE. ALWAYS USE THE CORRECT PART NUMBERED MODULE WHEN DIAGNOSING OR REPLACING A MODULE.

WARNING: ON VEHICLES EQUIPPED WITH AIRBAGS, REFER TO RESTRAINTS BEFORE ATTEMPTING ANY STEERING WHEEL, STEERING COLUMN, OR INSTRUMENT PANEL COMPONENT DIAGNOSIS OR SERVICE. FAILURE TO TAKE THE PROPER PRECAUTIONS COULD RESULT IN ACCIDENTAL AIRBAG DEPLOYMENT AND POSSIBLE PERSONAL INJURY.

PRELIMINARY TEST

Before testing the individual components in the heated seat system, check the following:

- If the heated seat switch LED indicators do not light with the ignition switch in the On position and the heated seat switch in the Low or High position,

HEATED SEAT SYSTEM (Continued)

check the fused ignition switch output (run) fuse in the junction block. If OK, refer to **Heated Seat Switch** in the Diagnosis and Testing section of this group. If not OK, repair the shorted circuit or component as required and replace the faulty fuse.

- If the heated seat switch LED indicators light, but the heating elements do not heat, check the power seat circuit breaker in the junction block. If OK, refer to **Heated Seat Element** in the Diagnosis and Testing section of this group. If not OK, replace the faulty power seat circuit breaker.

DRIVER HEATED SEAT SWITCH

DESCRIPTION

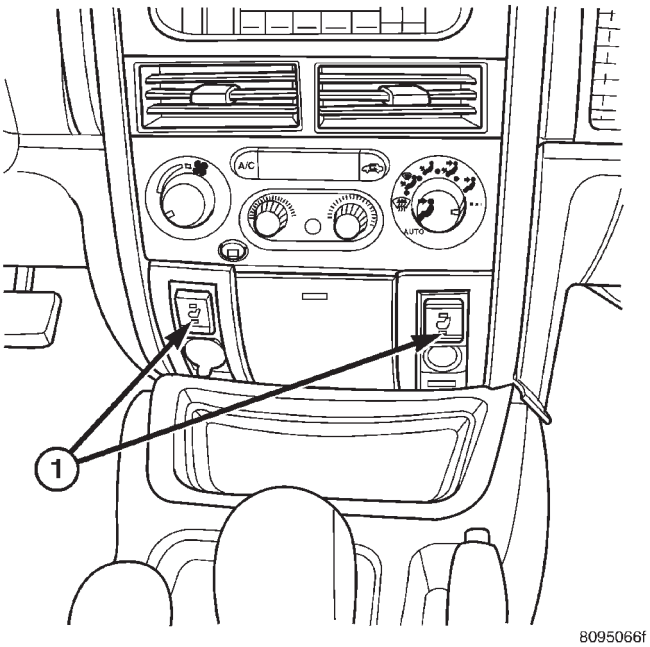

Fig. 2 HEATED SEAT SWITCHES

1 - SEAT HEATER SWITCHES

The heated seat switches are mounted in the instrument panel center lower bezel (Fig. 2), which is located near the bottom of the instrument panel center stack. The two three-position rocker-type switches, one switch for each front seat, provide a resistor multiplexed signal to the Body Control Module (BCM) through separate hard wired circuits. Each switch has an Off, Low, and High position so that both the driver and the front seat passenger can select a preferred seat heating mode. Each switch has two Light-Emitting Diodes (LED), one each for the Low position and the High position, which light to indicate that the heater for the seat that the switch controls is turned on. Each switch is also back lit by a replaceable incandescent bulb.

The heated seat switches and their LEDs cannot be repaired. If either switch or LED is faulty or damaged, the entire switch unit must be replaced. The incandescent switch illumination bulb and bulb holder units are available for service replacement.

OPERATION

There are three positions that can be selected with each of the heated seat switches: Off, Low, or High. When the top of the switch rocker is fully depressed, the High position is selected and the high position LED indicator illuminates. When the bottom of the switch rocker is fully depressed, the Low position is selected and the low position LED indicator illuminates. When the switch rocker is moved to its neutral position, Off is selected and both LED indicators are extinguished.

Both switches provide separate resistor multiplexed hard wire inputs to the BCM to indicate the selected switch position. The BCM monitors the switch inputs and sends heated seat switch status messages to the Heated Seat Module (HSM) or the Memory Heated Seat Module (MHSM) over the Programmable Communications Interface (PCI) data bus. The HSM or MHSM responds to the heated seat switch status messages by controlling the output to the seat heater elements of the selected seat. The Low heat position set point is about 36° C (97° F), and the High heat position set point is about 41° C (105° F).

DIAGNOSIS & TESTING - HEATED SEAT SWITCH

For complete circuit diagrams, refer to **Power Seats Premium I/III** in the Contents of Wiring Diagrams.

WARNING: ON VEHICLES EQUIPPED WITH AIRBAGS, REFER TO RESTRAINTS BEFORE ATTEMPTING ANY STEERING WHEEL, STEERING COLUMN, OR INSTRUMENT PANEL COMPONENT DIAGNOSIS OR SERVICE. FAILURE TO TAKE THE PROPER PRECAUTIONS COULD RESULT IN ACCIDENTAL AIRBAG DEPLOYMENT AND POSSIBLE PERSONAL INJURY.

(1) Check the fused ignition switch output (run) fuse in the junction block. If OK, go to Step 2. If not OK, repair the shorted circuit or component as required and replace the faulty fuse.

(2) Turn the ignition switch to the On position. Check for battery voltage at the fused ignition switch output (run) fuse in the junction block. If OK, go to Step 3. If not OK, repair the open fused ignition

DRIVER HEATED SEAT SWITCH (Continued)

switch output (run) circuit to the ignition switch as required.

(3) Disconnect and isolate the battery negative cable. Remove the lower center bezel from the instrument panel and disconnect the instrument panel wire harness connectors from both heated seat switch connector receptacles. Check for continuity between the ground circuit cavity of the instrument panel wire harness connector for the inoperative heated seat switch(es) and a good ground. There should be continuity. If OK, go to Step 4. If not OK, repair the open ground circuit to ground as required.

(4) Reconnect the battery negative cable. Turn the ignition switch to the On position. Check for battery voltage at the fused ignition switch output (run) circuit cavity of the instrument panel wire harness connector for the inoperative heated seat switch(es). If OK, turn the ignition switch to the Off position, disconnect and isolate the battery negative cable, and go to Step 5. If not OK, repair the open fused ignition switch output (run) circuit to the junction block fuse as required.

(5) Test the heated seat switch(es) (Fig. 3) as shown in the Heated Seat Switch Test chart. If OK, go to Step 6. If not OK, replace the faulty heated seat switch(es).

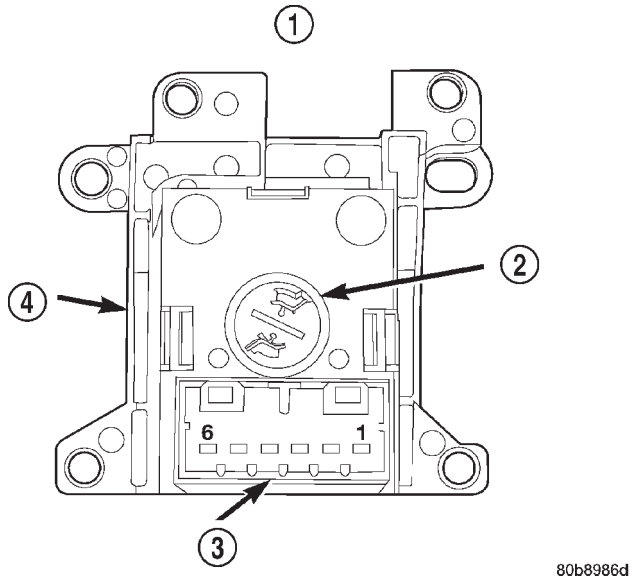

Fig. 3 Heated Seat Switch

1 - LEFT SHOWN (RIGHT TYPICAL)
2 - ILLUMINATION LAMP
3 - CONNECTOR RECEPTACLE
4 - HEATED SEAT SWITCH

HEATED SEAT SWITCH TEST		
SWITCH POSITION	RESISTANCE BETWEEN	RESISTANCE (OHMS)
Off	Pin 1 & 6	55
Low	Pin 1 & 6	1430
High	Pin 1 & 6	365
All resistance values are ±1%.		

(6) Disconnect the 22-way instrument panel wire harness connector from the Body Control Module (BCM) connector receptacle. Check for continuity between the seat heater switch sensor ground circuit cavity of the instrument panel wire harness connector for the inoperative heated seat switch(es) and a good ground. There should be no continuity. If OK, go to Step 7. If not OK, repair the shorted seat heater switch sensor ground circuit as required.

(7) Check for continuity between the seat heater switch sensor ground circuit cavities of the instrument panel wire harness connector for the in operative heated seat switch(es) and the 22-way instrument panel wire harness connector for the BCM. There should be continuity. If OK, go to Step 8. If not OK, repair the open seat heater switch sensor ground circuit as required.

(8) Check for continuity between the seat heater switch mux circuit cavity of the instrument panel wire harness connector for the inoperative heated seat switch and a good ground. There should be no continuity. If OK, go to Step 9. If not OK, repair the shorted seat heater switch mux circuit as required.

(9) Check for continuity between the seat heater switch mux circuit cavity of the instrument panel wire harness connector for the inoperative heated seat switch and the 22-way instrument panel wire harness connector for the BCM. There should be continuity. If OK, use a DRB III® scan tool and the proper Diagnostic Procedures manual to test the BCM. If not OK, repair the open seat heater switch mux circuit as required.

REMOVAL

WARNING: ON VEHICLES EQUIPPED WITH AIRBAGS, REFER TO RESTRAINTS BEFORE ATTEMPTING ANY STEERING WHEEL, STEERING COLUMN, OR INSTRUMENT PANEL COMPONENT DIAGNOSIS OR SERVICE. FAILURE TO TAKE THE PROPER PRECAUTIONS COULD RESULT IN ACCIDENTAL AIRBAG DEPLOYMENT AND POSSIBLE PERSONAL INJURY.

(1) Disconnect and isolate the battery negative cable.

DRIVER HEATED SEAT SWITCH (Continued)

(2) Remove the center lower bezel from the instrument panel. Refer to **Instrument Panel Center Lower Bezel** in Body for the procedure.

(3) Remove the four screws that secure the heated seat switch to the back of the instrument panel center lower bezel (Fig. 4).

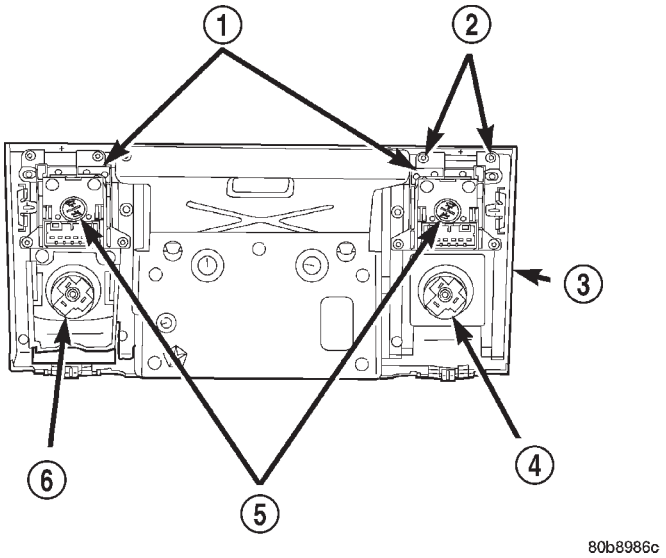

Fig. 4 Heated Seat Switch Remove/Install

1 - HEATED SEAT SWITCHES
2 - SCREWS (4)
3 - CENTER LOWER BEZEL
4 - CIGAR LIGHTER
5 - ILLUMINATION LAMPS
6 - POWER OUTLET

(4) Remove the heated seat switch from the back of the instrument panel center lower bezel.

INSTALLATION

WARNING: ON VEHICLES EQUIPPED WITH AIRBAGS, REFER TO RESTRAINTS BEFORE ATTEMPTING ANY STEERING WHEEL, STEERING COLUMN, OR INSTRUMENT PANEL COMPONENT DIAGNOSIS OR SERVICE. FAILURE TO TAKE THE PROPER PRECAUTIONS COULD RESULT IN ACCIDENTAL AIRBAG DEPLOYMENT AND POSSIBLE PERSONAL INJURY.

(1) Position the heated seat switch onto the back of the instrument panel center lower bezel.

(2) Install and tighten the four screws that secure the heated seat switch to the back of the instrument panel center lower bezel. Tighten the screws to 1.5 N·m (13 in. lbs.).

(3) Install the center lower bezel onto the instrument panel. Refer to **Instrument Panel Center Lower Bezel** in Body for the procedure.

(4) Reconnect the battery negative cable.

HEATED SEAT ELEMENT

DESCRIPTION

The heated seat system includes two seat heating elements in each front seat, one for the seat cushion and the other for the seat back. Two types of heated seat elements are offered. All Laredo models use two resistor wire heating elements for each seat that are connected in series with the Heated Seat Module (HSM). All Limited models use two carbon fiber mesh heating elements for each seat that are connected in parallel with the Memory Heated Seat Module (MHSM). The temperature sensor is a Negative Temperature Coefficient (NTC) thermistor. One temperature sensor is used for each seat, and it is located on the seat cushion heating element for all models.

The seat heating elements are sewn into the seat cushion cover trim and seat back cover trim units. The heated seat elements and the temperature sensor cannot be adjusted or repaired and, if faulty or damaged, the seat cushion cover trim unit or seat back cover trim unit must be replaced. Refer to **Bucket Seat Cushion Cover** or **Bucket Seat Back Cover** in the Removal and Installation section of Body for the seat cushion cover trim and seat back cover trim service procedures.

OPERATION

The heated seat elements resist the flow of electrical current. When battery current is passed through the elements, the energy lost by the resistance of the elements to the current flow is released in the form of heat. The temperature sensor is a NTC thermistor. When the temperature of the seat cushion cover rises, the resistance of the sensor decreases. The HSM or MHSM supplies a five-volt current to one side of each sensor, and monitors the voltage drop through the sensor on a return circuit. The MSM or MHSM uses this temperature sensor input to monitor the temperature of the seat, and regulates the current flow to the seat heating elements accordingly.

DIAGNOSIS & TESTING - HEATED SEAT ELEMENT

Two types of heated seat elements are offered, which require two different testing methods. All Laredo models use resistor wire heating elements for each seat that are connected in series with the Heated Seat Module (HSM) or the Memory Heated Seat Module (MHSM). All Limited models use carbon fiber mesh heating elements for each seat that are connected in parallel with the HSM or the MHSM. For complete circuit diagrams, refer to **Power Seats Premium I/III** in Wiring Diagrams.

HEATED SEAT ELEMENT (Continued)

RESISTOR WIRE ELEMENT

(1) Disconnect and isolate the battery negative cable. Disconnect the 4-way heated seat cushion element wire harness connector from the power seat wire harness. The power seat wire harness connectors for the seat cushion and seat back heating elements are secured to a bracket located under the rear edge of the seat cushion frame.

(2) Check for continuity between the seat heater B(+) driver circuit cavity of the 4-way heated seat cushion element wire harness connector and the seat cushion frame. There should be no continuity. If OK, go to Step 3. If not OK, replace the faulty seat cushion cover trim and element unit.

(3) Check for continuity between the seat heater B(+) driver circuit and the heated seat driver circuit cavities of the 4-way heated seat cushion element wire harness connector. There should be continuity. If OK, go to Step 4. If not OK, replace the faulty seat cushion cover trim and element unit.

(4) Disconnect the C2 connector of the power seat wire harness from the Heated Seat Module (HSM) or Memory Heated Seat Module (MHSM) connector receptacle. Check for continuity between the seat heater B(+) driver circuit cavity of the 4-way power seat wire harness connector for the heated seat cushion element and the seat cushion frame. There should be no continuity. If OK, go to Step 5. If not OK, repair the shorted seat heater B(+) driver circuit as required.

(5) Check for continuity between the seat heater B(+) driver circuit cavities of the 4-way power seat wire harness connector for the heated seat cushion element and the C2 power seat wire harness connector for the HSM or MHSM. There should be continuity. If OK, go to Step 6. If not OK, repair the open seat heater B(+) driver circuit as required.

(6) Disconnect the 2-way heated seat back element wire harness connector from the power seat wire harness. The power seat wire harness connectors for the seat cushion heating element and the seat back heating element are secured to a bracket located under the rear edge of the seat cushion frame.

(7) Check for continuity between the heated seat driver circuit cavity of the 2-way power seat wire harness connector for the heated seat back element and the seat cushion frame. There should be no continuity. If OK, go to Step 8. If not OK, repair the shorted heated seat driver circuit as required.

(8) Check for continuity between the heated seat driver circuit cavities of the 2-way power seat wire harness connector for the heated seat back element and the 4-way power seat wire harness connector for the heated seat cushion element. There should be continuity. If OK, go to Step 9. If not OK, repair the open heated seat driver circuit as required.

(9) Check for continuity between the heated seat driver circuit cavity of the 2-way heated seat back element wire harness connector and the seat cushion frame. There should be no continuity. If OK, go to Step 10. If not OK, replace the faulty seat back cover trim and element unit.

(10) Check for continuity between the driver seat heater ground circuit cavity of the 2-way power seat wire harness connector for the heated seat back element and the seat cushion frame. There should be no continuity. If OK, go to Step 11. If not OK, repair the shorted driver seat heater ground circuit as required.

(11) Check for continuity between the driver seat heater ground circuit cavities of the 2-way power seat wire harness connector for the heated seat back element and the C2 power seat wire harness connector for the HSM or MHSM. There should be continuity. If OK, refer to **Heated Seat Sensor** in the Diagnosis and Testing section of this group. If not OK, repair the open driver seat heater ground circuit as required.

CARBON FIBER ELEMENT

(1) If both the seat cushion and seat back elements fail to heat, go to Step 2. If only the seat back element fails to heat, go to Step 11. If only a portion of the heated seat cushion element fails to heat, replace the faulty seat cushion cover trim and element unit.

(2) Disconnect and isolate the battery negative cable. Disconnect the green 2-way heated seat jumper wire harness connector from the power seat wire harness. The power seat wire harness connector for the heated seat jumper is secured to a bracket located under the rear edge of the seat cushion frame. Check for continuity between the two cavities in the heated seat jumper half of the green wire harness connector. There should be continuity. If OK, to Step 3. If not OK, repair the open jumper circuit as required.

(3) Check for continuity between one cavity in the heated seat jumper half of the green wire harness connector and the seat back frame. There should be no continuity. If OK, go to Step 4. If not OK, repair the shorted jumper circuit as required.

(4) Disconnect the C2 connector of the power seat wire harness from the Heated Seat Module (HSM) or Memory Heated Seat Module (MHSM) connector receptacle. Check for continuity between the ground circuit cavities in the C2 connector and the power seat wire harness half of the 2-way green heated seat jumper wire harness connector. There should be continuity. If OK, go to Step 5. If not OK, repair the open ground circuit as required.

(5) Check for continuity between the ground circuit (Z1) cavities in the C2 connector and a good ground. There should be no continuity. If OK, go to

HEATED SEAT ELEMENT (Continued)

Step 6. If not OK, repair the shorted ground circuit (Z1) as required.

(6) Disconnect the 4-way heated seat element wire harness connector from the power seat wire harness. The 4-way heated seat element wire harness connector is secured next to the 2-way green heated seat jumper wire harness connector on a bracket located under the rear edge of the seat cushion frame. Check for continuity between the heated seat driver circuit cavities in the power seat wire harness halves of the 2-way green heated seat jumper wire harness connector and the 4-way heated seat element wire harness connector. There should be continuity. If OK, go to Step 7. If not OK, repair the open heated seat driver circuit as required.

(7) Check for continuity between the heated seat driver circuit cavity in the power seat wire harness half of the 2-way green heated seat jumper wire harness connector and a good ground. There should be no continuity. If OK, go to Step 8. If not OK, repair the shorted heated seat driver circuit as required.

(8) Check for continuity between the seat heater B(+) driver circuit cavities in the power seat wire harness half of the 4-way heated seat element wire harness connector and the C2 HSM or MHSM wire harness connector. There should be continuity. If OK, go to Step 9. If not OK, repair the open seat heater B(+) driver circuit as required.

(9) Check for continuity between the seat heater B(+) driver circuit cavity in the power seat wire harness half of the 4-way heated seat element wire harness connector and a good ground. There should be no continuity. If OK, go to Step 10. If not OK, repair the shorted seat heater B(+) driver circuit as required.

(10) Check the total heated seat element resistance between the heated seat driver circuit and the seat heater B(+) driver circuit cavities in the heated seat element half of the 4-way heated seat element wire harness connector. The resistance should be about 2.20 ohms ± 10%. If OK, refer to **Heated Seat Sensor** in the Diagnosis and Testing section of this group. If not OK, go to Step 11.

(11) Disconnect the black 2-way heated seat back element wire harness connector from the heated seat cushion element wire harness. The black 2-way heated seat back element wire harness connector is tucked under the seat cushion trim cover located near the rear edge of the seat cushion frame. Check the resistance of the heated seat back element between the two cavities in the seat back half of the black 2-way heated seat back element wire harness connector. The resistance should be about 5.51 ohms ± 10%. If OK, go to Step 12. If not OK, replace the faulty seat back cover trim and element unit.

(12) With the black 2-way heated seat back element wire harness connector still disconnected from the heated seat cushion element wire harness connector, check the resistance of the heated seat cushion elements between the heated seat driver circuit and the seat heater B(+) driver circuit cavities in the heated seat element half of the 4-way heated seat element wire harness connector. The resistance should be about 3.67 ohms ± 10%. If OK, refer to **Heated Seat Sensor** in the Diagnosis and Testing section of this group. If not OK, replace the faulty seat cushion cover trim and element unit.

HEATED SEAT SENSOR

DIAGNOSIS & TESTING - HEATED SEAT SENSOR

For complete circuit diagrams, refer to **Power Seats Premium I/III** in Wiring Diagrams.

(1) Disconnect and isolate the battery negative cable. Disconnect the 4-way heated seat cushion element wire harness connector from the power seat wire harness. The power seat wire harness connectors for the seat cushion and seat back heating elements are secured to a bracket located under the rear edge of the seat cushion frame.

(2) Check for continuity between the seat sensor 5V supply circuit cavity of the 4-way heated seat cushion element wire harness connector and the seat cushion frame. There should be no continuity. If OK, go to Step 3. If not OK, replace the faulty seat cushion cover trim and element unit.

(3) Using an ohmmeter, check the resistance between the seat sensor 5V supply circuit and the seat temperature sensor input circuit cavities of the 4-way heated seat cushion element wire harness connector. The sensor resistance should be between 14 kilohms at 15° C (60° F) and 5 kilohms at 30° C (85° F). If OK, go to Step 4. If not OK, replace the faulty seat cushion cover trim and element unit.

(4) Disconnect the C1 connector of the power seat wire harness from the Heated Seat Module (HSM) or Memory Heated Seat Module (MHSM) connector receptacle. Check for continuity between the seat sensor 5V supply circuit cavity of the 4-way power seat wire harness connector for the heated seat cushion element and the seat cushion frame. There should be no continuity. If OK, go to Step 5. If not OK, repair the shorted seat sensor 5V supply circuit as required.

(5) Check for continuity between the seat sensor 5V supply circuit cavities of the 4-way power seat wire harness connector for the heated seat cushion element and the C1 power seat wire harness connector for the HSM or MHSM. There should be continu-

HEATED SEAT SENSOR (Continued)

ity. If OK, go to Step 6. If not OK, repair the open seat sensor 5V supply circuit as required.

(6) Check for continuity between the seat temperature sensor input circuit cavity of the 4-way power seat wire harness connector for the heated seat cushion element and the seat cushion frame. There should be no continuity. If OK, go to Step 7. If not OK, repair the shorted seat temperature sensor input circuit as required.

(7) Check for continuity between the seat temperature sensor input circuit cavities of the 4-way power seat wire harness connector for the heated seat cushion element and the C1 power seat wire harness connector for the HSM or MHSM. There should be continuity. If OK, refer to **Heated Seat Module** in the Diagnosis and Testing section of this group. If not OK, repair the open seat temperature sensor input circuit as required.

PASSENGER HEATED SEAT SWITCH

DESCRIPTION

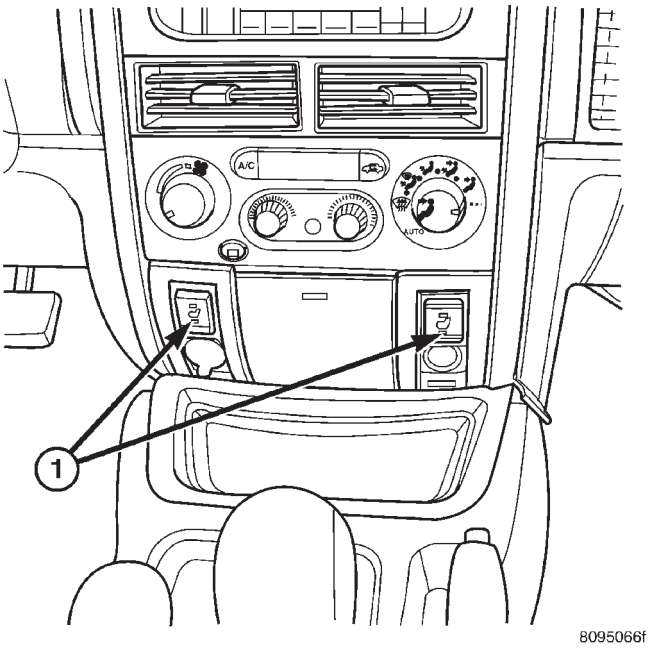

Fig. 5 HEATED SEAT SWITCHES

1 - SEAT HEATER SWITCHES

The heated seat switches are mounted in the instrument panel center lower bezel (Fig. 5), which is located near the bottom of the instrument panel center stack. The two three-position rocker-type switches, one switch for each front seat, provide a resistor multiplexed signal to the Body Control Module (BCM) through separate hard wired circuits. Each switch has an Off, Low, and High position so that both the driver and the front seat passenger can select a preferred seat heating mode. Each switch has two Light-Emitting Diodes (LED), one each for the Low position and the High position, which light to indicate that the heater for the seat that the switch controls is turned on. Each switch is also back lit by a replaceable incandescent bulb.

The heated seat switches and their LEDs cannot be repaired. If either switch or LED is faulty or damaged, the entire switch unit must be replaced. The incandescent switch illumination bulb and bulb holder units are available for service replacement.

OPERATION

There are three positions that can be selected with each of the heated seat switches: Off, Low, or High. When the top of the switch rocker is fully depressed, the High position is selected and the high position LED indicator illuminates. When the bottom of the switch rocker is fully depressed, the Low position is selected and the low position LED indicator illuminates. When the switch rocker is moved to its neutral position, Off is selected and both LED indicators are extinguished.

Both switches provide separate resistor multiplexed hard wire inputs to the BCM to indicate the selected switch position. The BCM monitors the switch inputs and sends heated seat switch status messages to the Heated Seat Module (HSM) or the Memory Heated Seat Module (MHSM) over the Programmable Communications Interface (PCI) data bus. The HSM or MHSM responds to the heated seat switch status messages by controlling the output to the seat heater elements of the selected seat. The Low heat position set point is about 36° C (97° F), and the High heat position set point is about 41° C (105° F).

DIAGNOSIS & TESTING - HEATED SEAT SWITCH

For complete circuit diagrams, refer to **Power Seats Premium I/III** in the Contents of Wiring Diagrams.

WARNING: ON VEHICLES EQUIPPED WITH AIRBAGS, REFER TO RESTRAINTS BEFORE ATTEMPTING ANY STEERING WHEEL, STEERING COLUMN, OR INSTRUMENT PANEL COMPONENT DIAGNOSIS OR SERVICE. FAILURE TO TAKE THE PROPER PRECAUTIONS COULD RESULT IN ACCIDENTAL AIRBAG DEPLOYMENT AND POSSIBLE PERSONAL INJURY.

PASSENGER HEATED SEAT SWITCH (Continued)

(1) Check the fused ignition switch output (run) fuse in the junction block. If OK, go to Step 2. If not OK, repair the shorted circuit or component as required and replace the faulty fuse.

(2) Turn the ignition switch to the On position. Check for battery voltage at the fused ignition switch output (run) fuse in the junction block. If OK, go to Step 3. If not OK, repair the open fused ignition switch output (run) circuit to the ignition switch as required.

(3) Disconnect and isolate the battery negative cable. Remove the lower center bezel from the instrument panel and disconnect the instrument panel wire harness connectors from both heated seat switch connector receptacles. Check for continuity between the ground circuit cavity of the instrument panel wire harness connector for the inoperative heated seat switch(es) and a good ground. There should be continuity. If OK, go to Step 4. If not OK, repair the open ground circuit to ground as required.

(4) Reconnect the battery negative cable. Turn the ignition switch to the On position. Check for battery voltage at the fused ignition switch output (run) circuit cavity of the instrument panel wire harness connector for the inoperative heated seat switch(es). If OK, turn the ignition switch to the Off position, disconnect and isolate the battery negative cable, and go to Step 5. If not OK, repair the open fused ignition switch output (run) circuit to the junction block fuse as required.

(5) Test the heated seat switch(es) (Fig. 6) as shown in the Heated Seat Switch Test chart. If OK, go to Step 6. If not OK, replace the faulty heated seat switch(es).

HEATED SEAT SWITCH TEST		
SWITCH POSITION	RESISTANCE BETWEEN	RESISTANCE (OHMS)
Off	Pin 1 & 6	55
Low	Pin 1 & 6	1430
High	Pin 1 & 6	365
All resistance values are ±1%.		

(6) Disconnect the 22-way instrument panel wire harness connector from the Body Control Module (BCM) connector receptacle. Check for continuity between the seat heater switch sensor ground circuit cavity of the instrument panel wire harness connector for the inoperative heated seat switch(es) and a good ground. There should be no continuity. If OK, go to Step 7. If not OK, repair the shorted seat heater switch sensor ground circuit as required.

(7) Check for continuity between the seat heater switch sensor ground circuit cavities of the instrument panel wire harness connector for the in operative heated seat switch(es) and the 22-way instrument panel wire harness connector for the BCM. There should be continuity. If OK, go to Step 8. If not OK, repair the open seat heater switch sensor ground circuit as required.

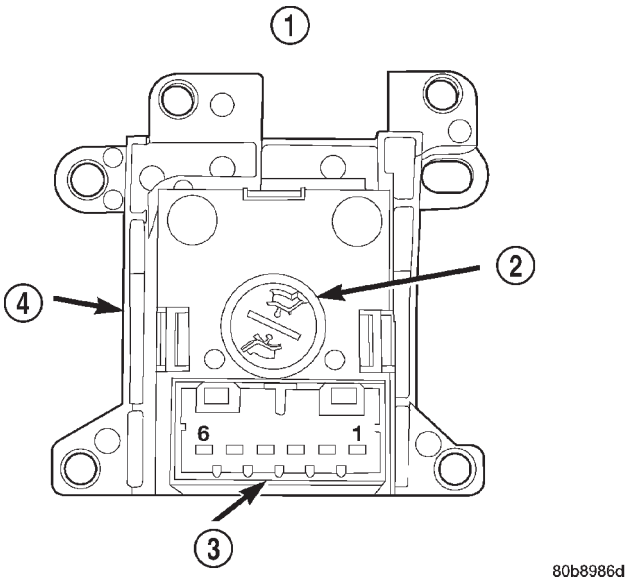

Fig. 6 Heated Seat Switch

1 - LEFT SHOWN (RIGHT TYPICAL)
2 - ILLUMINATION LAMP
3 - CONNECTOR RECEPTACLE
4 - HEATED SEAT SWITCH

(8) Check for continuity between the seat heater switch mux circuit cavity of the instrument panel wire harness connector for the inoperative heated seat switch and a good ground. There should be no continuity. If OK, go to Step 9. If not OK, repair the shorted seat heater switch mux circuit as required.

(9) Check for continuity between the seat heater switch mux circuit cavity of the instrument panel wire harness connector for the inoperative heated seat switch and the 22-way instrument panel wire harness connector for the BCM. There should be continuity. If OK, use a DRB III® scan tool and the proper Diagnostic Procedures manual to test the BCM. If not OK, repair the open seat heater switch mux circuit as required.

REMOVAL

WARNING: ON VEHICLES EQUIPPED WITH AIRBAGS, REFER TO RESTRAINTS BEFORE ATTEMPTING ANY STEERING WHEEL, STEERING COLUMN, OR INSTRUMENT PANEL COMPONENT DIAGNOSIS OR SERVICE. FAILURE TO TAKE THE PROPER PRECAUTIONS COULD RESULT IN ACCIDENTAL AIRBAG DEPLOYMENT AND POSSIBLE PERSONAL INJURY.

PASSENGER HEATED SEAT SWITCH (Continued)

(1) Disconnect and isolate the battery negative cable.

(2) Remove the center lower bezel from the instrument panel. Refer to **Instrument Panel Center Lower Bezel** in Body for the procedure.

(3) Remove the four screws that secure the heated seat switch to the back of the instrument panel center lower bezel (Fig. 7).

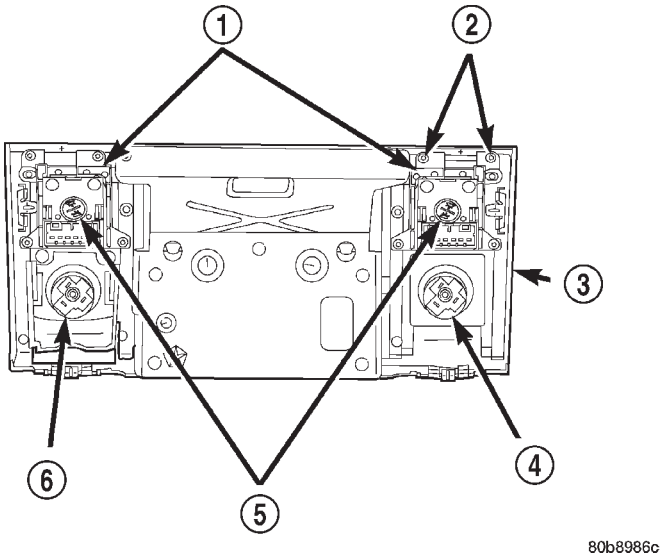

Fig. 7 Heated Seat Switch Remove/Install

1 - HEATED SEAT SWITCHES
2 - SCREWS (4)
3 - CENTER LOWER BEZEL
4 - CIGAR LIGHTER
5 - ILLUMINATION LAMPS
6 - POWER OUTLET

(4) Remove the heated seat switch from the back of the instrument panel center lower bezel.

INSTALLATION

WARNING: ON VEHICLES EQUIPPED WITH AIRBAGS, REFER TO RESTRAINTS BEFORE ATTEMPTING ANY STEERING WHEEL, STEERING COLUMN, OR INSTRUMENT PANEL COMPONENT DIAGNOSIS OR SERVICE. FAILURE TO TAKE THE PROPER PRECAUTIONS COULD RESULT IN ACCIDENTAL AIRBAG DEPLOYMENT AND POSSIBLE PERSONAL INJURY.

(1) Position the heated seat switch onto the back of the instrument panel center lower bezel.

(2) Install and tighten the four screws that secure the heated seat switch to the back of the instrument panel center lower bezel. Tighten the screws to 1.5 N·m (13 in. lbs.).

(3) Install the center lower bezel onto the instrument panel. Refer to **Instrument Panel Center Lower Bezel** in Body for the procedure.

(4) Reconnect the battery negative cable.

HEATED GLASS

TABLE OF CONTENTS

page

HEATED GLASS
DESCRIPTION 13
OPERATION. 13
DIAGNOSIS AND TESTING 14
WINDOW DEFOGGER 14
REAR WINDOW DEFOGGER GRID
DESCRIPTION 15
OPERATION. 15
DIAGNOSIS AND TESTING 15
REAR WINDOW DEFOGGER GRID 15
STANDARD PROCEDURE 15
REAR GLASS HEATING GRID REPAIR 15
REAR WINDOW DEFOGGER RELAY
DESCRIPTION 16
OPERATION. 17
DIAGNOSIS AND TESTING 17
REAR WINDOW DEFOGGER RELAY 17
REMOVAL 18
INSTALLATION. 18
REAR WINDOW DEFOGGER SWITCH
DESCRIPTION 18
OPERATION. 19
DIAGNOSIS AND TESTING 19
REAR WINDOW DEFOGGER SWITCH. 19
REMOVAL 19

HEATED GLASS

DESCRIPTION - REAR WINDOW DEFOGGER

An electrically heated rear window defogger is standard factory-installed equipment on this model. Electrically heated outside rear view mirrors are available facory-installed optional equipment. When the rear window defogger system is turned on, electric heater grids on the liftgate flip-up glass and behind both outside rear view mirror glasses are energized. These electric heater grids produce heat to help clear the rear window glass and the outside rear view mirrors of ice, snow, or fog. The rear window defogger system control circuit uses ignition switched battery current, so the system will only operate when the ignition switch is in the On position.

This group covers the following components of the rear window defogger system:

- Rear glass heating grid
- Rear window defogger relay
- Rear window defogger switch.

Certain functions and features of the rear window defogger system rely upon resources shared with other electronic modules in the vehicle over the Programmable Communications Interface (PCI) data bus network. The PCI data bus network allows the sharing of sensor information. This helps to reduce wire harness complexity, internal controller hardware, and component sensor current loads. At the same time, this system provides increased reliability, enhanced diagnostics, and allows the addition of many new feature capabilities. For diagnosis of these electronic modules or of the PCI data bus network, use a DRB III® scan tool and (Refer to Appropriate Diagnostic Information).

The other electronic modules that may affect proper system operation are:

- **Body Control Module (BCM)** - Refer to Electronic Control Modules for more information.
- **Driver Door Module (DDM)** - Refer to Electronic Control Modules for more information.
- **Passenger Door Module (PDM)** - Refer to Electronic Control Modules for more information.

OPERATION - REAR WINDOW DEFOGGER

The rear window defogger system is controlled by a momentary switch that is integral to the a/c heater control located in the center stack area of the instrument panel. A Light-Emitting Diode (LED) in the switch button will light to indicate when the rear window defogger system is turned on. The BCM, which contains the rear window defogger system timer and control logic, monitors the status of the defogger switch through a hard-wired input. The BCM then sends control outputs through a hard wired circuit to energize or de-energize the defogger relay.

The electrically heated outside rear view mirror heating grids are also controlled by the rear window defogger switch. When the BCM receives an input from the switch, it sends a defogger switch status message to the DDM and the PDM over the PCI data bus. The DDM and PDM respond to the defogger switch status messages by energizing or de-energizing the battery current feed to their respective outside rear view mirror heating grids.

HEATED GLASS (Continued)

The rear window defogger system will be automatically turned off after a programmed time interval of about ten minutes. After the initial time interval has expired, if the defogger switch is turned on again during the same ignition cycle, the defogger system will automatically turn off after about five minutes. The defogger system will automatically shut off if the ignition switch is turned to the Off position, or it can be turned off manually by depressing the rear window defogger switch again.

See the owner's manual in the vehicle glove box for more information on the features, use and operation of the rear window defogger system.

DIAGNOSIS AND TESTING - WINDOW DEFOGGER

WARNING: ON VEHICLES EQUIPPED WITH AIRBAGS, DISABLE THE AIRBAG SYSTEM BEFORE ATTEMPTING ANY STEERING WHEEL, STEERING COLUMN, OR INSTRUMENT PANEL COMPONENT DIAGNOSIS OR SERVICE. DISCONNECT AND ISOLATE THE BATTERY NEGATIVE (GROUND) CABLE, THEN WAIT TWO MINUTES FOR THE AIRBAG SYSTEM CAPACITOR TO DISCHARGE BEFORE PERFORMING FURTHER DIAGNOSIS OR SERVICE. THIS IS THE ONLY SURE WAY TO DISABLE THE AIRBAG SYSTEM. FAILURE TO TAKE THE PROPER PRECAUTIONS COULD RESULT IN AN ACCIDENTAL AIRBAG DEPLOYMENT AND POSSIBLE PERSONAL INJURY.

For complete circuit diagrams, refer to Appropriate Wiring Information. The operation of the electrically heated rear window defogger system can be confirmed in one of the following manners:

- Turn the ignition switch to the On position. While monitoring the instrument panel voltmeter, depress the rear window defogger switch to the On position. When the rear window defogger switch is turned On, a distinct voltmeter needle deflection should be noted.
- Turn the ignition switch to the On position. Depress the rear window defogger switch to the On position. The rear window defogger operation can be checked by feeling the rear window or outside rear view mirror glass. A distinct difference in temperature between the grid lines and the adjacent clear glass or the mirror glass can be detected within three to four minutes of operation.
- Using a 12-volt DC voltmeter, contact the rear glass heating grid terminal A (right side) with the negative lead, and terminal B (left side) with the positive lead (Fig. 1). The voltmeter should read battery voltage.

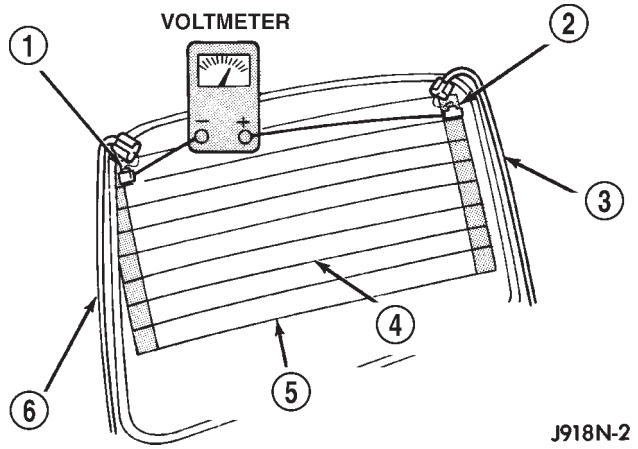

Fig. 1 REAR WINDOW GLASS GRID TEST

1 - TERMINAL "A"
2 - TERMINAL "B"
3 - FEED WIRE
4 - MID-POINT "C" (TYPICAL)
5 - HEATED REAR WINDOW DEFOGGER GRID
6 - GROUND WIRE

The above checks will confirm rear window defogger system operation. Illumination of the rear window defogger switch LED indicator means that there is battery current available at the output of the rear window defogger relay, but does not confirm that battery current is reaching the rear glass heating grid lines.

If the rear window defogger system does not operate, the problem should be isolated in the following manner:

(1) Confirm that the ignition switch is in the On position.

(2) Ensure that the rear glass heating grid feed and ground terminals are connected to the glass. Confirm that the ground wire has continuity to ground.

(3) Check the fused B(+) fuse in the Power Distribution Center (PDC). The fuse must be tight in its receptacles and all electrical connections must be secure.

When the above steps have been completed and the rear glass heating grid is still inoperative, one or more of the following is faulty:

- Rear window defogger switch
- Rear window defogger relay
- Body Control Module (BCM)
- Rear window grid lines (all grid lines would have to be broken or one of the feed wires disconnected for the entire system to be inoperative).

When the above steps have been completed and the heated mirror glass heating grid is still inoperative, one or more of the following is faulty:

- Body Control Module (BCM)

HEATED GLASS (Continued)

- Programmable Communications Interface (PCI) data bus
- Driver Door Module (DDM) or Passenger Door Module (PDM)
- Outside rear view mirror heating grids.

If turning the rear window defogger system on produces a severe voltmeter deflection, check for a short circuit between the rear window defogger relay output and the rear glass heating grid.

REAR WINDOW DEFOGGER GRID

DESCRIPTION

The electrically heated rear window glass is standard equipment on this model. The liftgate flip-up glass has two electrically conductive vertical bus bars and a series of horizontal grid lines made of a silver-ceramic material, which is baked on and bonded to the inside surface of the glass. These grid lines and the bus bars comprise a parallel electrical circuit. A spade type terminal near the top of each bus bar accept the connectors from the two coiled liftgate wire harness take outs.

The grid lines and bus bars are highly resistant to abrasion. However, it is possible for an open circuit to occur in an individual grid line, resulting in no current flow through the line. The grid lines can be damaged or scraped off with sharp instruments. Care should be taken when cleaning the glass or removing foreign materials, decals, or stickers from the glass. Normal glass cleaning solvents or hot water used with rags or toweling is recommended.

A repair kit is available to repair the grid lines and bus bars, or to reinstall the heated glass terminals. (Refer to 8 - ELECTRICAL/HEATED GLASS/REAR WINDOW DEFOGGER GRID - STANDARD PROCEDURE)

OPERATION

The rear glass heating grid is energized and de-energized by the rear window defogger relay. The Body Control Module (BCM) monitors the rear window defogger switch. When the BCM receives an input from the switch, it energizes or de-energizes the rear window defogger relay through a hard wired control output. The rear defogger relay switches fused battery current to the rear window grid lines through the bus bars. The grid lines heat the rear window glass to clear the surface of ice, snow or fog. Protection for the rear glass heating grid circuit is provided by a fuse in the Power Distribution Center (PDC).

DIAGNOSIS AND TESTING - REAR WINDOW DEFOGGER GRID

For complete circuit diagrams, refer to the Appropriate Wiring Information. To detect breaks in the rear glass heating grid lines, the following procedure is required:

(1) Turn the ignition switch to the On position. Turn the rear window defogger system on. The rear window defogger switch LED indicator should light. If OK, go to Step 2. If not OK, (Refer to 8 - ELECTRICAL/HEATED GLASS/REAR WINDOW DEFOGGER RELAY - DIAGNOSIS AND TESTING).

(2) Using a 12-volt DC voltmeter, contact the rear glass heating grid vertical bus bar on the right side of the vehicle with the negative lead. With the positive lead, contact the rear glass heating grid vertical bus bar on the left side of the vehicle. The voltmeter should read battery voltage. If OK, go to Step 3. If not OK, repair the open rear window defogger relay output circuit to the rear window defogger relay as required.

(3) With the positive voltmeter lead still contacting the rear glass heating grid vertical bus bar on the left side of the vehicle, move the negative lead of the voltmeter to a good body ground point. The voltage reading should not change. If OK, go to Step 4. If not OK, repair the ground circuit to ground as required.

(4) Connect the negative lead of the voltmeter to the right side bus bar and touch each grid line at midpoint C with the positive lead (Fig. 2). A reading of approximately six volts indicates a line is good. A reading of zero volts indicates a break in the grid line between midpoint C and the left side rear glass heating grid bus bar. A reading of ten to fourteen volts indicates a break between midpoint C and the right side rear heating grid bus bar. Move the positive lead on the grid line towards the break and the voltage reading will change as soon as the break is crossed.

STANDARD PROCEDURE - REAR GLASS HEATING GRID REPAIR

Repair of the rear glass heating grid lines, bus bars, and terminals can be accomplished using a Mopar Rear Window Defogger Repair Kit (Part Number 4267922) or equivalent.

REAR WINDOW DEFOGGER GRID (Continued)

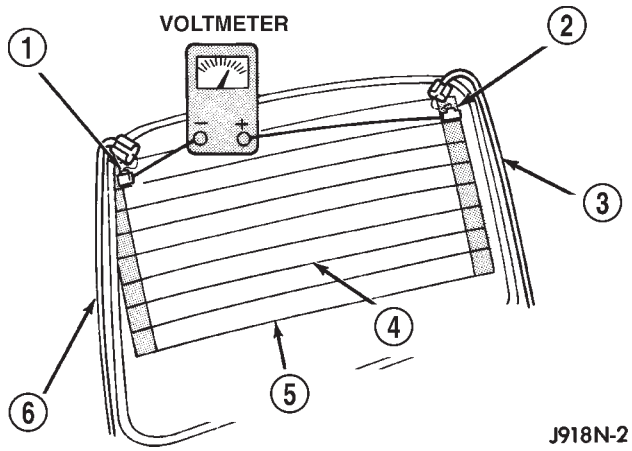

Fig. 2 REAR WINDOW GLASS GRID TEST

1 - TERMINAL "A"
2 - TERMINAL "B"
3 - FEED WIRE
4 - MID-POINT "C" (TYPICAL)
5 - HEATED REAR WINDOW DEFOGGER GRID
6 - GROUND WIRE

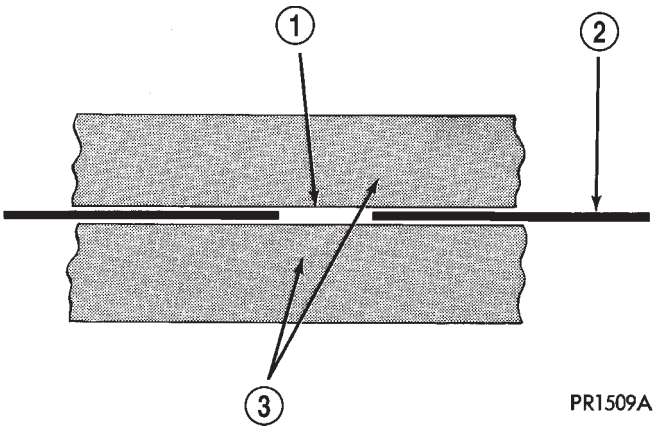

Fig. 3 GRID LINE REPAIR

1 - BREAK
2 - GRID LINE
3 - MASKING TAPE

WARNING: MATERIALS CONTAINED IN THE REPAIR KIT MAY CAUSE SKIN OR EYE IRRITATION. THE KIT CONTAINS EPOXY RESIN AND AMINE TYPE HARDENER, WHICH ARE HARMFUL IF SWALLOWED. AVOID CONTACT WITH THE SKIN AND EYES. FOR SKIN CONTACT, WASH THE AFFECTED AREAS WITH SOAP AND WATER. FOR CONTACT WITH THE EYES, FLUSH WITH PLENTY OF WATER. DO NOT TAKE INTERNALLY. IF TAKEN INTERNALLY, INDUCE VOMITING AND CALL A PHYSICIAN IMMEDIATELY. USE WITH ADEQUATE VENTILATION. DO NOT USE NEAR FIRE OR FLAME. CONTAINS FLAMMABLE SOLVENTS. KEEP OUT OF THE REACH OF CHILDREN.

(1) Mask the repair area on the inside of the rear glass so that the conductive epoxy can be applied neatly. Extend the epoxy application onto the rear glass heating grid bus bar or grid line on each side of the break (Fig. 3).

(2) Follow the instructions in the repair kit for preparing the damaged area.

(3) Remove the package separator clamp and mix the two conductive epoxy components thoroughly within the packaging. Fold the package in half and cut the center corner to dispense the epoxy.

(4) For rear glass heating grid line repairs, mask the area to be repaired with masking tape or a template.

(5) Apply the epoxy through the slit in the masking tape or template. Overlap both ends of the break by at least 19 millimeters (0.75 inch).

(6) For a rear glass heating grid terminal replacement, mask the adjacent areas so the epoxy can be extended onto the adjacent grid line as well as onto the bus bar. Apply a thin layer of epoxy to the area where the terminal was previously fastened and onto the adjacent grid line.

(7) Apply a thin layer of conductive epoxy to the terminal and place it in the proper location on the rear glass heating grid bus bar. To prevent the terminal from moving while the epoxy is curing, it must be wedged or clamped.

(8) Carefully remove the masking tape or template.

CAUTION: Do not allow the glass surface to exceed 204° C (400° F) or the glass may fracture.

(9) Allow the epoxy to cure for 24 hours at room temperature, or use a heat gun with a 260° to 371° C (500° to 700° F) range for fifteen minutes. Hold the heat gun approximately 25.4 centimeters (10 inches) from the repair.

(10) After the conductive epoxy is properly cured, remove the wedge or clamp from the terminal. Do not attach the wire harness connectors until the curing process is complete.

(11) Check the operation of the rear glass heating grid.

REAR WINDOW DEFOGGER RELAY

DESCRIPTION

The rear window defogger relay is an electromechanical device that switches fused battery current to the rear glass heating grid and the Light-Emitting Diode (LED) indicator of the rear window defogger switch, when the Body Control Module (BCM) rear

REAR WINDOW DEFOGGER RELAY (Continued)

window defogger timer and logic circuitry grounds the relay coil. The rear window defogger relay is located in the junction block, under the left end of the instrument panel in the passenger compartment.

The rear window defogger relay is a International Standards Organization (ISO) relay. Relays conforming to the ISO specifications have common physical dimensions, current capacities, terminal patterns, and terminal functions.

The rear window defogger relay cannot be repaired or adjusted and, if faulty or damaged, it must be replaced.

OPERATION

The ISO relay consists of an electromagnetic coil, a resistor or diode, and three (two fixed and one movable) electrical contacts. The movable (common feed) relay contact is held against one of the fixed contacts (normally closed) by spring pressure. When the electromagnetic coil is energized, it draws the movable contact away from the normally closed fixed contact, and holds it against the other (normally open) fixed contact.

When the electromagnetic coil is de-energized, spring pressure returns the movable contact to the normally closed position. The resistor or diode is connected in parallel with the electromagnetic coil in the relay, and helps to dissipate voltage spikes that are produced when the coil is de-energized.

DIAGNOSIS AND TESTING - REAR WINDOW DEFOGGER RELAY

WARNING: ON VEHICLES EQUIPPED WITH AIRBAGS, DISABLE THE AIRBAG SYSTEM BEFORE ATTEMPTING ANY STEERING WHEEL, STEERING COLUMN, OR INSTRUMENT PANEL COMPONENT DIAGNOSIS OR SERVICE. DISCONNECT AND ISOLATE THE BATTERY NEGATIVE (GROUND) CABLE, THEN WAIT TWO MINUTES FOR THE AIRBAG SYSTEM CAPACITOR TO DISCHARGE BEFORE PERFORMING FURTHER DIAGNOSIS OR SERVICE. THIS IS THE ONLY SURE WAY TO DISABLE THE AIRBAG SYSTEM. FAILURE TO TAKE THE PROPER PRECAUTIONS COULD RESULT IN AN ACCIDENTAL AIRBAG DEPLOYMENT AND POSSIBLE PERSONAL INJURY.

RELAY TEST

The rear window defogger relay (Fig. 4) is located in the junction block, under the left end of the instrument panel in the passenger compartment. Remove the rear window defogger relay from the junction block to perform the following tests:

(1) A relay in the de-energized position should have continuity between terminals 87A and 30, and no continuity between terminals 87 and 30. If OK, go to Step 2. If not OK, replace the faulty relay.

(2) Resistance between terminals 85 and 86 (electromagnet) should be 75 ± 10 ohms. If OK, go to Step 3. If not OK, replace the faulty relay.

(3) Connect a battery to terminals 85 and 86. There should now be continuity between terminals 30 and 87, and no continuity between terminals 87A and 30. If OK, refer to the **Relay Circuit Test**. If not OK, replace the faulty relay.

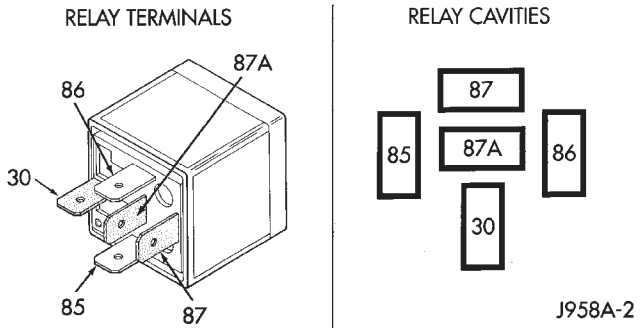

Fig. 4 REAR WINDOW DEFOGGER RELAY

TERMINAL LEGEND

NUMBER	IDENTIFICATION
30	COMMON FEED
85	COIL GROUND
86	COIL BATTERY
87	NORMALLY OPEN
87A	NORMALLY CLOSED

RELAY CIRCUIT TEST

(1) The relay common feed terminal cavity (30) is connected to battery voltage and should be hot at all times. If OK, go to Step 2. If not OK, repair the open fused B(+) circuit to the Power Distribution Center (PDC) fuse as required.

(2) The relay normally closed terminal (87A) is connected to terminal 30 in the de-energized position, but is not used for this application. Go to Step 3.

(3) The relay normally open terminal (87) is connected to the common feed terminal (30) in the energized position. This terminal supplies battery voltage to the rear glass heating grid and to the fuse in the junction block that feeds the rear window defogger switch LED indicator. There should be continuity between the cavity for relay terminal 87 and the rear glass heating grid and the rear window defogger switch LED indicator at all times. If OK, go to Step

REAR WINDOW DEFOGGER RELAY (Continued)

4. If not OK, repair the open rear window defogger relay output circuit as required.

(4) The coil battery terminal (86) is connected to the electromagnet in the relay. It is connected to battery voltage and should be hot at all times. Check for battery voltage at the cavity for relay terminal 86. If OK, go to Step 5. If not OK, repair the open fused B(+) circuit to the PDC fuse as required.

(5) The coil ground terminal (85) is connected to the electromagnet in the relay. This terminal is provided with ground by the Body Control Module (BCM) rear window defogger timer and logic circuitry to energize the defogger relay. There should be continuity to the rear window defogger relay control circuit cavity of the 22-way instrument panel wire harness connector for the BCM. If OK, use a DRB scan tool and refer to the Appropriate Diagnostic Information to test the BCM. If not OK, repair the open rear window defogger relay control circuit as required.

REMOVAL

WARNING: ON VEHICLES EQUIPPED WITH AIRBAGS, DISABLE THE AIRBAG SYSTEM BEFORE ATTEMPTING ANY STEERING WHEEL, STEERING COLUMN, OR INSTRUMENT PANEL COMPONENT DIAGNOSIS OR SERVICE. DISCONNECT AND ISOLATE THE BATTERY NEGATIVE (GROUND) CABLE, THEN WAIT TWO MINUTES FOR THE AIRBAG SYSTEM CAPACITOR TO DISCHARGE BEFORE PERFORMING FURTHER DIAGNOSIS OR SERVICE. THIS IS THE ONLY SURE WAY TO DISABLE THE AIRBAG SYSTEM. FAILURE TO TAKE THE PROPER PRECAUTIONS COULD RESULT IN AN ACCIDENTAL AIRBAG DEPLOYMENT AND POSSIBLE PERSONAL INJURY.

(1) Disconnect and isolate the battery negative cable.

(2) Remove the steering column opening cover from the instrument panel. Refer to Instrument Panel System for the procedures.

(3) The rear window defogger relay is located on the right side of the combination flasher in the junction block (Fig. 5).

(4) Remove the rear window defogger relay from the junction block.

INSTALLATION

(1) Position the rear window defogger relay in the proper receptacle in the junction block.

(2) Align the rear window defogger relay terminals with the terminal cavities in the junction block receptacle.

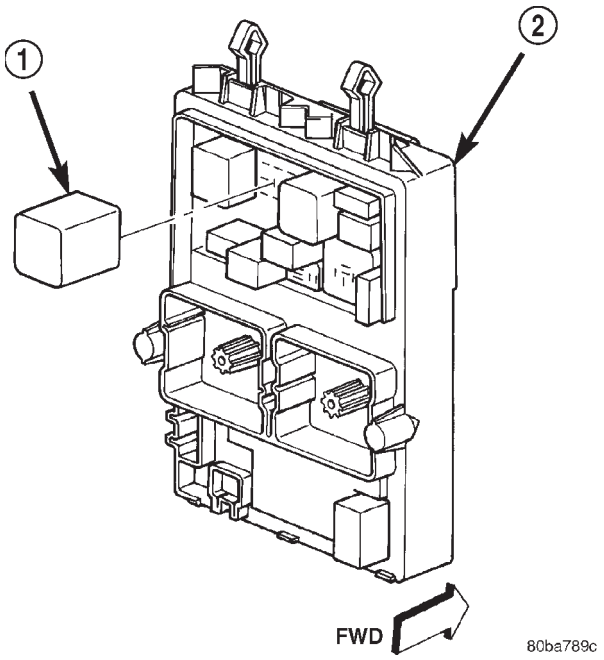

Fig. 5 JUNCTION BLOCK

1 - COMBINATION FLASHER
2 - JUNCTION BLOCK

(3) Push in firmly on the rear window defogger relay until the terminals are fully seated in the terminal cavities in the junction block receptacle.

(4) Install the steering column opening cover onto the instrument panel. Refer to Instrument Panel System for the procedures.

(5) Reconnect the battery negative cable.

REAR WINDOW DEFOGGER SWITCH

DESCRIPTION

The rear window defogger switch is integral to the a/c heater control, which is located in the instrument panel center stack below the radio receiver. This momentary switch provides a hard wired ground signal to the Body Control Module (BCM) each time it is depressed. A Light Emitting Diode (LED) in the push button for the rear window defogger switch illuminates to indicate when the rear window defogger system is turned on.

The rear window defogger switch and the rear window defogger switch LED indicator cannot be repaired and, if faulty or damaged, the entire a/c heater control must be replaced. (Refer to 24 - HEATING & AIR CONDITIONING/CONTROLS/A/C HEATER CONTROL - REMOVAL)

REAR WINDOW DEFOGGER SWITCH (Continued)

OPERATION

When the rear window defogger switch push button is depressed, it momentarily closes the rear window defogger switch sense circuit for the BCM to ground. The BCM monitors the rear window defogger switch sense circuit. Each time the BCM rear window defogger timer and logic circuitry sees another input from the switch, it toggles a control output to the rear window defogger relay. Energizing the rear window defogger relay provides electrical current to the rear window defogger grid and to the LED indicator in the switch, which lights to indicate when the defogger system is turned on. A dedicated fuse in the junction block protects the rear window defogger relay output circuit to the LED indicator.

DIAGNOSIS AND TESTING - REAR WINDOW DEFOGGER SWITCH

For complete circuit diagrams, refer to the Appropriate Wiring Information.

WARNING: ON VEHICLES EQUIPPED WITH AIRBAGS, DISABLE THE AIRBAG SYSTEM BEFORE ATTEMPTING ANY STEERING WHEEL, STEERING COLUMN, OR INSTRUMENT PANEL COMPONENT DIAGNOSIS OR SERVICE. DISCONNECT AND ISOLATE THE BATTERY NEGATIVE (GROUND) CABLE, THEN WAIT TWO MINUTES FOR THE AIRBAG SYSTEM CAPACITOR TO DISCHARGE BEFORE PERFORMING FURTHER DIAGNOSIS OR SERVICE. THIS IS THE ONLY SURE WAY TO DISABLE THE AIRBAG SYSTEM. FAILURE TO TAKE THE PROPER PRECAUTIONS COULD RESULT IN AN ACCIDENTAL AIRBAG DEPLOYMENT AND POSSIBLE PERSONAL INJURY.

(1) Disconnect and isolate the battery negative cable. Remove the a/c heater control from the instrument panel and disconnect the 11-way (manual temperature control) or 16-way (automatic zone control) instrument panel wire harness connector from the a/c heater control receptacle.

(2) Check for continuity between the ground circuit cavity of the 11-way or 16-way instrument panel wire harness connector for the a/c heater control and a good ground. There should be continuity. If OK, go to Step 3. If not OK, repair the open ground circuit to ground as required.

(3) Connect two jumper wires to the a/c heater control 11-way or 16-way connector receptacle. Connect one jumper from the ground circuit terminal in the 11-way or 16-way a/c heater control connector receptacle to a good ground. Connect the other jumper from the fused rear window defogger relay output circuit terminal of the 11-way or 16-way connector receptacle to a 12-volt battery feed. The rear window defogger switch LED indicator should light. If OK, go to Step 4. If not OK, replace the faulty a/c heater control.

(4) Check for continuity between the ground circuit and rear window defogger switch sense circuit terminals of the 11-way or 16-way a/c heater control connector receptacle. There should be momentary continuity as the rear window defogger switch push button is depressed, and then no continuity. If OK, go to Step 5. If not OK, replace the faulty a/c heater control.

(5) Disconnect the 22-way instrument panel wire harness connector from the Body Control Module (BCM) connector receptacle. Check for continuity between the rear window defogger switch sense circuit cavity of the 11-way or 16-way instrument panel wire harness connector for the a/c heater control and a good ground. There should be no continuity. If OK, go to Step 6. If not OK, repair the shorted rear window defogger switch sense circuit as required.

(6) Check for continuity between the rear window defogger switch sense circuit cavities of the 11-way or 16-way instrument panel wire harness connector for the a/c heater control and the 22-way instrument panel wire harness connector for the BCM. There should be continuity. If OK, refer to (Refer to 8 - ELECTRICAL/HEATED GLASS/REAR WINDOW DEFOGGER RELAY - DIAGNOSIS AND TESTING).

REMOVAL

WARNING: ON VEHICLES EQUIPPED WITH AIRBAGS, DISABLE THE AIRBAG SYSTEM BEFORE ATTEMPTING ANY STEERING WHEEL, STEERING COLUMN, OR INSTRUMENT PANEL COMPONENT DIAGNOSIS OR SERVICE. DISCONNECT AND ISOLATE THE BATTERY NEGATIVE (GROUND) CABLE, THEN WAIT TWO MINUTES FOR THE AIRBAG SYSTEM CAPACITOR TO DISCHARGE BEFORE PERFORMING FURTHER DIAGNOSIS OR SERVICE. THIS IS THE ONLY SURE WAY TO DISABLE THE AIRBAG SYSTEM. FAILURE TO TAKE THE PROPER PRECAUTIONS COULD RESULT IN AN ACCIDENTAL AIRBAG DEPLOYMENT AND POSSIBLE PERSONAL INJURY.

(Refer to 24 - HEATING & AIR CONDITIONING/CONTROLS/A/C HEATER CONTROL - REMOVAL)

HORN

TABLE OF CONTENTS

page

HORN SYSTEM
DESCRIPTION 1
OPERATION 2
DIAGNOSIS AND TESTING 2
HORN SYSTEM 2
HORN
DESCRIPTION 3
OPERATION 3
DIAGNOSIS AND TESTING 3
DIAGNOSIS AND TESTING - HORN 3
REMOVAL 4
INSTALLATION 4
HORN RELAY
DESCRIPTION 4
OPERATION 5
DIAGNOSIS AND TESTING 5
HORN RELAY 5
REMOVAL 6
INSTALLATION 6
HORN SWITCH
DESCRIPTION 6
OPERATION 6
DIAGNOSIS AND TESTING 6
DIAGNOSIS AND TESTING - HORN SWITCH 6
REMOVAL 7
INSTALLATION 8

HORN SYSTEM

DESCRIPTION

A dual-note electric horn system is standard factory-installed equipment on this model. The standard equipment horn system features one low-note horn unit and one high-note horn unit. The horn system allows the vehicle operator to provide an audible warning of the presence or approach of the vehicle to pedestrians and the drivers of other vehicles in near proximity. The horn system uses a non-switched source of battery current so that the system will remain functional, regardless of the ignition switch position.

The horn system can also be activated by the Body Control Module (BCM). The BCM is programmed to activate the horns in order to provide the following features:

- Remote Keyless Entry (RKE) system lock request audible verification (customer programmable)
- RKE system panic mode audible alert
- Vehicle Theft Security System (VTSS) audible alarm.

This vehicle also offers several customer programmable features, which allows the selection of several optional electronic features to suit individual preferences. Refer to Overhead Console for more information on the customer programmable feature options. Customer programmable feature options affecting the horn system include:

- **Sound Horn on Lock** - Allows the option of having the horn sound a short chirp as an audible verification that the RKE system received a valid Lock request from the RKE transmitter, or having no audible verification.

The horn system includes the following components:

- Clockspring
- Horns
- Horn relay
- Horn switch

Certain functions and features of the horn system rely upon resources shared with other electronic modules in the vehicle over the Programmable Communications Interface (PCI) data bus network. The PCI data bus network allows the sharing of sensor information. This helps to reduce wire harness complexity, internal controller hardware, and component sensor current loads. At the same time, this system provides increased reliability, enhanced diagnostics, and allows the addition of many new feature capabilities. For diagnosis of these electronic modules or of the PCI data bus network, the use of a DRB scan tool and the proper Diagnostic Procedures manual are recommended.

The other electronic modules that may affect horn system operation are as follows:

- **Body Control Module (BCM)** (Refer to 8 - ELECTRICAL/ELECTRONIC CONTROL MODULES/BODY CONTROL/CENTRAL TIMER MODUL - DESCRIPTION) for more information.
- **Electronic Vehicle Information Center (EVIC)** (Refer to 8 - ELECTRICAL/OVERHEAD CONSOLE/ELECTRONIC VEHICLE INFO CENTER - DESCRIPTION) for more information.

(Refer to 8 - ELECTRICAL/RESTRAINTS/CLOCKSPRING - DESCRIPTION) for more information on

HORN SYSTEM (Continued)

this component. Refer to the appropriate wiring information. The wiring information includes wiring diagrams, proper wire and connector repair procedures, details of wire harness routing and retention, connector pin-out information and location views for the various wire harness connectors, splices and grounds. Following are general descriptions of the remaining major components in the horn system.

OPERATION

The horn system is activated by a horn switch concealed beneath the driver side airbag module trim cover in the center of the steering wheel. Depressing the center of the driver side airbag module trim cover closes the horn switch. Closing the horn switch activates the horn relay. The activated horn relay then switches the battery current needed to energize the horns.

The BCM can also activate the horn system by energizing the horn relay through a single hard wired output circuit. The BCM energizes and de-energizes the horn relay in response to internal programming as well as message inputs received over the Programmable Communications Interface (PCI) data bus network. The BCM can energize the horn relay for a single chirp (RKE lock request), or for extended operation (RKE panic mode and VTSS alarm mode).

Refer to the owner's manual in the vehicle glove box for more information on the features, use and operation of the horn system.

DIAGNOSIS AND TESTING

In most cases, any problem involving continually sounding horns can be quickly alleviated by removing the horn relay from the Power Distribution Center (PDC). Refer to Horn Relay for the proper removal procedure. Refer to the appropriate wiring information. The wiring information includes wiring diagrams, proper wire and connector repair procedures, further details on wire harness routing and retention, as well as pin-out and location views for the various wire harness connectors, splices and grounds.

WARNING: ON VEHICLES EQUIPPED WITH AIRBAGS, DISABLE THE AIRBAG SYSTEM BEFORE ATTEMPTING ANY STEERING WHEEL, STEERING COLUMN, OR INSTRUMENT PANEL COMPONENT DIAGNOSIS OR SERVICE. DISCONNECT AND ISOLATE THE BATTERY NEGATIVE (GROUND) CABLE, THEN WAIT TWO MINUTES FOR THE AIRBAG SYSTEM CAPACITOR TO DISCHARGE BEFORE PERFORMING FURTHER DIAGNOSIS OR SERVICE. THIS IS THE ONLY SURE WAY TO DISABLE THE AIRBAG SYSTEM. FAILURE TO TAKE THE PROPER PRECAUTIONS COULD RESULT IN ACCIDENTAL AIRBAG DEPLOYMENT AND POSSIBLE PERSONAL INJURY.

HORN SYSTEM (Continued)

HORN SYSTEM DIAGNOSIS		
CONDITION	POSSIBLE CAUSES	CORRECTION
BOTH HORNS INOPERATIVE	1. Faulty fuse.	1. Check the fuses in the Power Distribution Center (PDC) and the Junction Block (JB). Replace the fuse and repair the shorted circuit or component, if required.
	2. Faulty horn relay.	2. Refer to Horn Relay for the proper horn relay diagnosis and testing procedures. Replace the horn relay or repair the open horn relay circuit, if required.
	3. Faulty horn switch.	3. Refer to Horn Switch for the proper horn switch diagnosis and testing procedures. Replace the horn switch or repair the open horn switch circuit, if required.
	4. Faulty horns.	4. Refer to Horn for the proper horn diagnosis and testing procedures. Replace the horns or repair the open horn circuit, if required.
ONE HORN INOPERATIVE	1. Faulty horn.	1. Refer to Horn for the proper horn diagnosis and testing procedures. Replace the horn or repair the open horn circuit, if required.
HORN SOUNDS CONTINUOUSLY	1. Faulty horn relay.	1. Refer to Horn Relay for the proper horn relay diagnosis and testing procedures. Replace the horn relay or repair the shorted horn relay control circuit, if required.
	2. Faulty horn switch.	2. Refer to Horn Switch for the proper horn switch diagnosis and testing procedures. Replace the horn switch or repair the shorted horn switch circuit, if required.

HORN

DESCRIPTION

The dual electromagnetic diaphragm-type horns are standard equipment on this model. Both horns are secured to a mounting bracket. The mounting bracket is secured with a screw to the back side of the right extension of the radiator closure assembly, just ahead of the right front wheel house and below the front wheel house extension. The two horns are connected in parallel. Each horn is grounded through its wire harness connector and circuit to an eyelet secured to the right inner fender shield near the battery, and receives battery feed through the closed contacts of the horn relay.

The horns cannot be repaired or adjusted and, if faulty or damaged, they must be individually replaced.

OPERATION

Within the two halves of the molded plastic horn housing are a flexible diaphragm, a plunger, an electromagnetic coil and a set of contact points. The diaphragm is secured in suspension around its perimeter by the mating surfaces of the horn housing. The plunger is secured to the center of the diaphragm and extends into the center of the electromagnet. The contact points control the current flow through the electromagnet.

When the horn is energized, electrical current flows through the closed contact points to the electromagnet. The resulting electromagnetic field draws the plunger and diaphragm toward it until that movement mechanically opens the contact points. When the contact points open, the electromagnetic field collapses allowing the plunger and diaphragm to return to their relaxed positions and closing the contact points again. This cycle continues repeating at a very rapid rate producing the vibration and movement of air that creates the sound that is directed through the horn outlet.

DIAGNOSIS AND TESTING

Refer to the appropriate wiring information. The wiring information includes wiring diagrams, proper wire and connector repair procedures, details of wire harness routing and retention, connector pin-out information and location views for the various wire harness connectors, splices and grounds.

HORN (Continued)

(1) Disconnect the wire harness connector(s) from the horn connector receptacle(s). Measure the resistance between the ground circuit cavity of the horn(s) wire harness connector(s) and a good ground. There should be no measurable resistance. If OK, go to Step 2. If not OK, repair the open ground circuit to ground as required.

(2) Check for battery voltage at the horn relay output circuit cavity of the horn(s) wire harness connector(s). There should be zero volts. If OK, go to Step 3. If not OK, repair the shorted horn relay output circuit or replace the faulty horn relay as required.

(3) Depress the horn switch. There should now be battery voltage at the horn relay output circuit cavity of the horn(s) wire harness connector(s). If OK, replace the faulty horns. If not OK, repair the open horn relay output circuit to the horn relay as required.

REMOVAL

(1) Disconnect and isolate the battery negative cable.

(2) Raise and support the vehicle.

(3) Remove the lower front half of the inner liner from the right front fender wheel house. (Refer to 23 - BODY/EXTERIOR/FRONT FENDER - REMOVAL).

(4) Reach through the front of the right front fender wheel house opening to access and disconnect the two right headlamp and dash wire harness connectors from the horn connector receptacles (Fig. 1). Be certain to disengage the connector lock tabs before disconnecting them from the horn connector receptacles.

(5) Remove the screw that secures the horn mounting bracket to the right extension of the radiator closure assembly.

(6) Remove both horns and the mounting bracket from the right extension of the radiator closure assembly as a unit.

INSTALLATION

(1) Position both horns and the mounting bracket onto the right extension of the radiator closure assembly as a unit.

(2) Install and tighten the screw that secures the horn mounting bracket to the right extension of the radiator closure assembly. Tighten the screw to 11.3 N·m (100 in. lbs.).

(3) Reconnect the two right headlamp and dash wire harness connectors to the horn connector receptacles. Be certain to engage the connector lock tabs after reconnecting them to the horn connector receptacles.

(4) Install the lower front half of the inner liner to the right front fender wheel house. (Refer to 23 - BODY/EXTERIOR/FRONT FENDER - INSTALLATION) for the procedure.

(5) Lower the vehicle.

(6) Reconnect the battery negative cable.

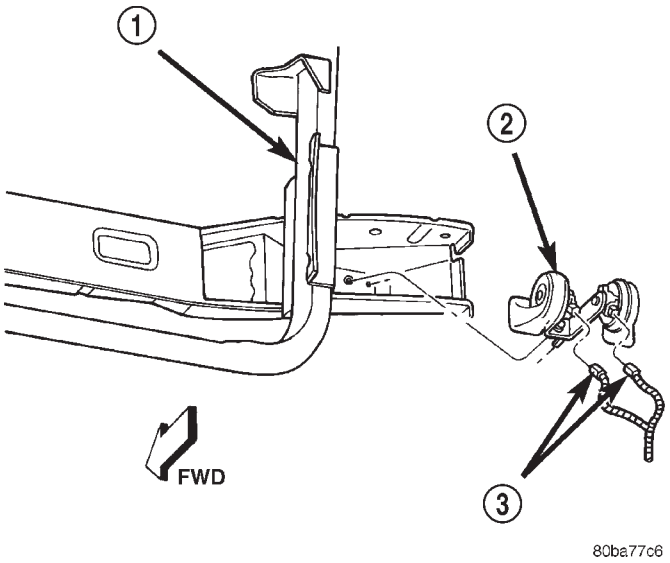

Fig. 1 Horns Remove/Install

1 - RADIATOR CLOSURE ASSEMBLY
2 - HORNS AND MOUNTING BRACKET
3 - RIGHT HEADLAMP AND DASH WIRE HARNESS CONNECTORS

HORN RELAY

DESCRIPTION

The horn relay is a electromechanical device that switches battery current to the horn when the horn switch grounds the relay coil. The horn relay is located in the Power Distribution Center (PDC) in the engine compartment. If a problem is encountered with a continuously sounding horn, it can usually be quickly resolved by removing the horn relay from the PDC until further diagnosis is completed. See the fuse and relay layout label affixed to the inside surface of the PDC cover for horn relay identification and location.

The horn relay is a International Standards Organization (ISO) micro-relay. Relays conforming to the ISO specifications have common physical dimensions, current capacities, terminal patterns, and terminal functions. The ISO micro-relay terminal functions are the same as a conventional ISO relay. However, the ISO micro-relay terminal pattern (or footprint) is different, the current capacity is lower, and the physical dimensions are smaller than those of the conventional ISO relay.

HORN RELAY (Continued)

The horn relay cannot be repaired or adjusted and, if faulty or damaged, it must be replaced.

OPERATION

The ISO relay consists of an electromagnetic coil, a resistor or diode, and three (two fixed and one movable) electrical contacts. The movable (common feed) relay contact is held against one of the fixed contacts (normally closed) by spring pressure. When the electromagnetic coil is energized, it draws the movable contact away from the normally closed fixed contact, and holds it against the other (normally open) fixed contact.

When the electromagnetic coil is de-energized, spring pressure returns the movable contact to the normally closed position. The resistor or diode is connected in parallel with the electromagnetic coil in the relay, and helps to dissipate voltage spikes that are produced when the coil is de-energized.

DIAGNOSIS AND TESTING

The horn relay (Fig. 2) is located in the Power Distribution Center (PDC) between the battery and the right inner fender shield on the passenger side of the engine compartment. If a problem is encountered with a continuously sounding horn, it can usually be quickly resolved by removing the horn relay from the PDC until further diagnosis is completed. See the fuse and relay layout label affixed to the inside surface of the PDC cover for horn relay identification and location. For complete circuit diagrams, refer to the appropriate wiring information. The wiring information includes wiring diagrams, proper wire and connector repair procedures, details of wire harness routing and retention, connector pin-out information and location views for the various wire harness connectors, splices and grounds.

WARNING: ON VEHICLES EQUIPPED WITH AIRBAGS, REFER TO ELECTRICAL, RESTRAINTS BEFORE ATTEMPTING ANY STEERING WHEEL, STEERING COLUMN, OR INSTRUMENT PANEL COMPONENT DIAGNOSIS OR SERVICE. FAILURE TO TAKE THE PROPER PRECAUTIONS COULD RESULT IN ACCIDENTAL AIRBAG DEPLOYMENT AND POSSIBLE PERSONAL INJURY.

(1) Remove the horn relay from the PDC. (Refer to 8 - ELECTRICAL/HORN/HORN RELAY - REMOVAL) for the procedures.

(2) A relay in the de-energized position should have continuity between terminals 87A and 30, and no continuity between terminals 87 and 30. If OK, go to Step 3. If not OK, replace the faulty relay.

(3) Resistance between terminals 85 and 86 (electromagnet) should be 75 ± 5 ohms. If OK, go to Step 4. If not OK, replace the faulty relay.

(4) Connect a battery to terminals 85 and 86. There should now be continuity between terminals 30 and 87, and no continuity between terminals 87A and 30. If OK, perform the Relay Circuit Test that follows. If not OK, replace the faulty relay.

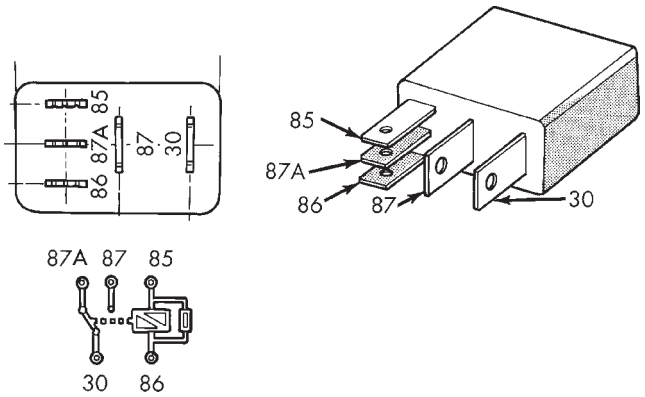

Fig. 2 Horn Relay

30 - COMMON FEED
85 - COIL GROUND
86 - COIL BATTERY
87 - NORMALLY OPEN
87A - NORMALLY CLOSED

RELAY CIRCUIT TEST

(1) The relay common feed terminal cavity (30) is connected to battery voltage and should be hot at all times. If OK, go to Step 2. If not OK, repair the open circuit to the fuse in the PDC as required.

(2) The relay normally closed terminal (87A) is connected to terminal 30 in the de-energized position, but is not used for this application. Go to Step 3.

(3) The relay normally open terminal (87) is connected to the common feed terminal (30) in the energized position. This terminal supplies battery voltage to the horn(s). There should be continuity between the cavity for relay terminal 87 and the horn relay output circuit cavity of each horn wire harness connector at all times. If OK, go to Step 4. If not OK, repair the open circuit to the horn(s) as required.

(4) The coil battery terminal (86) is connected to the electromagnet in the relay. It is connected to battery voltage and should be hot at all times. Check for battery voltage at the cavity for relay terminal 86. If OK, go to Step 5. If not OK, repair the open circuit to the fuse in the PDC as required.

(5) The coil ground terminal (85) is connected to the electromagnet in the relay. It is grounded through the horn switch when the horn switch is depressed. The horn relay coil ground terminal can also be grounded by the Body Control Module (BCM) in response to certain inputs related to the RKE system or the Vehicle Theft Security System. Check for continuity to ground at the cavity for relay terminal 85. There should be

HORN RELAY (Continued)

continuity with the horn switch depressed, and no continuity with the horn switch released. If not OK, (Refer to 8 - ELECTRICAL/HORN/HORN SWITCH - DIAGNOSIS AND TESTING).

REMOVAL

(1) Disconnect and isolate the battery negative cable.

(2) Remove the cover from the Power Distribution Center (PDC) (Fig. 3) .

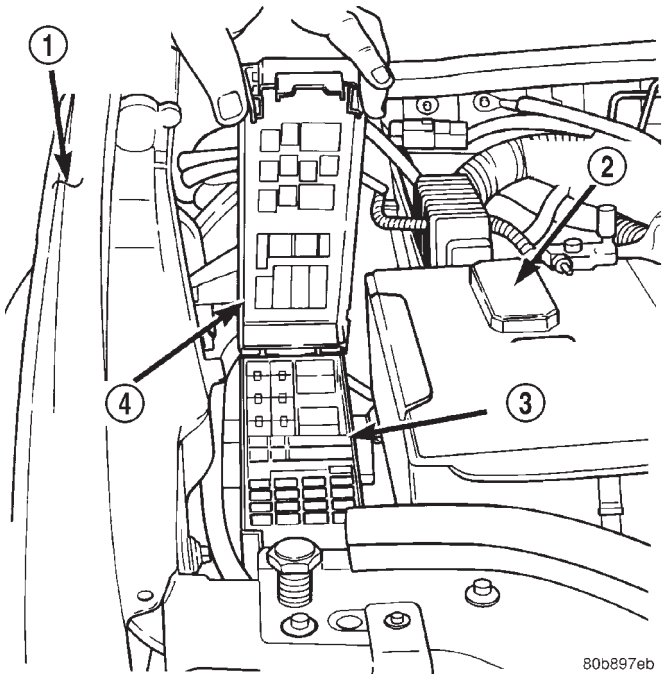

Fig. 3 Power Distribution Center

1 - RIGHT FENDER
2 - BATTERY
3 - POWER DISTRIBUTION CENTER
4 - COVER

(3) See the fuse and relay layout label affixed to the underside of the PDC cover for horn relay identification and location.

(4) Remove the horn relay from the PDC.

INSTALLATION

(1) See the fuse and relay layout label affixed to the underside of the PDC cover for the proper horn relay location.

(2) Position the horn relay in the proper receptacle in the PDC.

(3) Align the horn relay terminals with the terminal cavities in the PDC receptacle.

(4) Push down firmly on the horn relay until the terminals are fully seated in the terminal cavities in the PDC receptacle.

(5) Install the cover onto the PDC.

(6) Reconnect the battery negative cable.

HORN SWITCH

DESCRIPTION

A center-blow, normally open, resistive membrane-type horn switch is secured in a plastic tray that is inserted in a pocket sewn on the front of the driver side airbag retainer strap. The horn switch is concealed behind the driver side airbag module trim cover in the center of the steering wheel. The switch consists of two plastic membranes, one that is flat and one that is slightly convex. These two membranes are secured to each other around the perimeter. Inside the switch, the centers of the facing surfaces of these membranes each has a grid made with an electrically conductive material applied to it. One of the grids is connected to a circuit that provides it with continuity to ground at all times. The grid of the other membrane is connected to the horn relay control circuit.

The steering wheel and steering column must be properly grounded in order for the horn switch to function properly. The horn switch and plastic tray are serviced as a unit. If the horn switch is damaged or faulty, or if the driver side airbag is deployed, the horn switch and tray must be replaced as a unit.

OPERATION

When the center area of the driver side airbag trim cover is depressed, the electrically conductive grids on the facing surfaces of the horn switch membranes contact each other, closing the switch circuit. The completed horn switch circuit provides a ground for the control coil side of the horn relay, which activates the relay. When the horn switch is released, the resistive tension of the convex membrane separates the two electrically conductive grids and opens the switch circuit.

DIAGNOSIS AND TESTING

For complete circuit diagrams, refer to the appropriate wiring information. The wiring information includes wiring diagrams, proper wire and connector repair procedures, details of wire harness routing and retention, connector pin-out information and location views for the various wire harness connectors, splices and grounds.

WARNING: ON VEHICLES EQUIPPED WITH AIRBAGS, REFER TO ELECTRICAL, RESTRAINTS BEFORE ATTEMPTING ANY STEERING WHEEL, STEERING COLUMN, OR INSTRUMENT PANEL COMPONENT DIAGNOSIS OR SERVICE. FAILURE TO TAKE THE PROPER PRECAUTIONS COULD RESULT IN ACCIDENTAL AIRBAG DEPLOYMENT AND POSSIBLE PERSONAL INJURY.

HORN SWITCH (Continued)

(1) Disconnect and isolate the battery negative cable. Remove the steering column opening cover from the instrument panel.

(2) Check for continuity between the metal steering column jacket and a good ground. There should be continuity. If OK, go to Step 3. If not OK, refer to Steering, Column for proper installation of the steering column.

(3) Remove the driver side airbag module from the steering wheel. Disconnect the horn switch wire harness connectors from the driver side airbag module.

(4) Remove the horn relay from the Power Distribution Center (PDC). Check for continuity between the steering column half of the horn switch feed wire harness connector and a good ground. There should be no continuity. If OK, go to Step 5. If not OK, repair the shorted horn relay control circuit to the horn relay in the PDC as required.

(5) Check for continuity between the steering column half of the horn switch feed wire harness connector and the horn relay control circuit cavity for the horn relay in the PDC. There should be continuity. If OK, go to Step 6. If not OK, repair the open horn relay control circuit to the horn relay in the PDC as required.

(6) Check for continuity between the horn switch feed wire and the horn switch ground wire on the driver side airbag module. There should be no continuity. If OK, go to Step 7. If not OK, replace the faulty horn switch.

(7) Depress the center of the driver side airbag module trim cover and check for continuity between the horn switch feed wire and the horn switch ground wire on the driver side airbag module. There should now be continuity. If not OK, replace the faulty horn switch.

REMOVAL

WARNING:

- **ON VEHICLES EQUIPPED WITH AIRBAGS, REFER TO ELECTRICAL, RESTRAINTS BEFORE ATTEMPTING ANY STEERING WHEEL, STEERING COLUMN, OR INSTRUMENT PANEL COMPONENT DIAGNOSIS OR SERVICE. FAILURE TO TAKE THE PROPER PRECAUTIONS COULD RESULT IN ACCIDENTAL AIRBAG DEPLOYMENT AND POSSIBLE PERSONAL INJURY.**
- **THE HORN SWITCH IS INTEGRAL TO THE DRIVER SIDE AIRBAG MODULE. SERVICE OF THIS COMPONENT SHOULD BE PERFORMED ONLY BY CHRYSLER-TRAINED AND AUTHORIZED DEALER SERVICE TECHNICIANS. FAILURE TO TAKE THE PROPER PRECAUTIONS OR TO FOLLOW THE PROPER PROCEDURES COULD RESULT IN ACCIDENTAL, INCOMPLETE, OR IMPROPER AIRBAG DEPLOYMENT AND POSSIBLE OCCUPANT INJURIES.**

(1) Disconnect and isolate the battery negative cable.

(2) Remove the trim cover from the driver side airbag module. (Refer to 8 - ELECTRICAL/RESTRAINTS/DRIVER AIRBAG - REMOVAL) for the procedure.

(3) Remove the horn switch and tray as a unit from the pouch on the retaining strap of the driver side airbag module (Fig. 4).

HORN SWITCH (Continued)

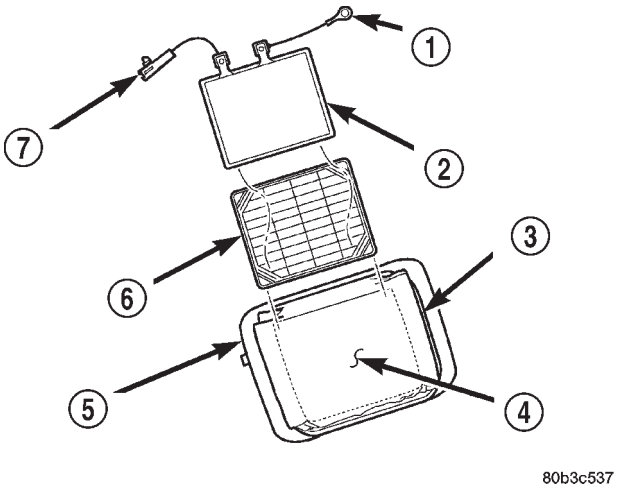

Fig. 4 Horn Switch Remove/Install

1 - HORN SWITCH GROUND WIRE EYELET
2 - HORN SWITCH
3 - AIRBAG RETAINING STRAP
4 - POUCH
5 - DRIVER SIDE AIRBAG MODULE (TRIM COVER REMOVED)
6 - TRAY
7 - HORN SWITCH FEED WIRE CONNECTOR

INSTALLATION

WARNING:

• ON VEHICLES EQUIPPED WITH AIRBAGS, REFER TO ELECTRICAL, RESTRAINTS BEFORE ATTEMPTING ANY STEERING WHEEL, STEERING COLUMN, OR INSTRUMENT PANEL COMPONENT DIAGNOSIS OR SERVICE. FAILURE TO TAKE THE PROPER PRECAUTIONS COULD RESULT IN ACCIDENTAL AIRBAG DEPLOYMENT AND POSSIBLE PERSONAL INJURY.

• THE HORN SWITCH IS INTEGRAL TO THE DRIVER SIDE AIRBAG MODULE. SERVICE OF THIS COMPONENT SHOULD BE PERFORMED ONLY BY CHRYSLER-TRAINED AND AUTHORIZED DEALER SERVICE TECHNICIANS. FAILURE TO TAKE THE PROPER PRECAUTIONS OR TO FOLLOW THE PROPER PROCEDURES COULD RESULT IN ACCIDENTAL, INCOMPLETE, OR IMPROPER AIRBAG DEPLOYMENT AND POSSIBLE OCCUPANT INJURIES.

(1) Install the horn switch and tray as a unit into the pouch on the retaining strap of the driver side airbag module. Be certain that the tray is facing the airbag module, that the horn switch is facing the trim cover, that the horn switch feed wire is on the left, and that the horn switch ground wire is on the right.

(2) Install the trim cover onto the driver side airbag module. (Refer to 8 - ELECTRICAL/RESTRAINTS/DRIVER AIRBAG - INSTALLATION) for the procedure.

(3) Reconnect the battery negative cable.

IGNITION CONTROL

TABLE OF CONTENTS

page

IGNITION CONTROL
DESCRIPTION 1
OPERATION 1
SPECIFICATIONS 2
AUTO SHUT DOWN RELAY
DESCRIPTION 3
OPERATION 3
REMOVAL 3
INSTALLATION 4
CAMSHAFT POSITION SENSOR
DESCRIPTION 4
OPERATION 4
REMOVAL 5
INSTALLATION 7
COIL RAIL
DESCRIPTION 8
OPERATION 9
REMOVAL 9
INSTALLATION 10

page

IGNITION COIL
DESCRIPTION 10
OPERATION 10
REMOVAL 11
INSTALLATION 12
IGNITION COIL CAPACITOR
DESCRIPTION 12
OPERATION 12
REMOVAL 13
INSTALLATION 13
SPARK PLUG
DESCRIPTION 13
OPERATION 13
DIAGNOSIS AND TESTING 13
SPARK PLUG CONDITIONS 13
REMOVAL 16
CLEANING 16
INSTALLATION 16

IGNITION CONTROL

DESCRIPTION

Two different ignition systems are used. One type of system is for the 4.0L 6–cylinder engine. The other is for the 4.7L V-8 engine.

OPERATION

The 4.0L 6–cylinder engine uses a one-piece coil rail containing three independent coils. Although cylinder firing order is the same as 4.0L engines of previous years, spark plug firing is not. The 3 coils dual-fire the spark plugs on cylinders 1–6, 2–5 and/or 3–4. When one cylinder is being fired (on compression stroke), the spark to the opposite cylinder is being wasted (on exhaust stroke). The one-piece coil bolts directly to the cylinder head. Rubber boots seal the secondary terminal ends of the coils to the top of all 6 spark plugs. One electrical connector (located at the rear end of the coil rail) is used for all three coils.

The 4.7L V-8 engine uses 8 dedicated and individually fired coil for each spark plug. Each coil is mounted directly to the top of each spark plug. A separate electrical connector is used for each coil.

Because of coil design, spark plug cables (secondary cables) are not used on either engine. A **distributor is not used** with either the 4.0L or 4.7L engines.

The ignition system is controlled by the powertrain control module (PCM) on all engines.

The ignition system consists of:

- Spark Plugs
- Ignition Coil(s)
- Powertrain Control Module (PCM)
- Crankshaft Position Sensor
- Camshaft Position Sensor
- The MAP, TPS, IAC and ECT also have an effect on the control of the ignition system.

SPECIFICATIONS

ENGINE FIRING ORDER—4.0L 6-CYLINDER ENGINE

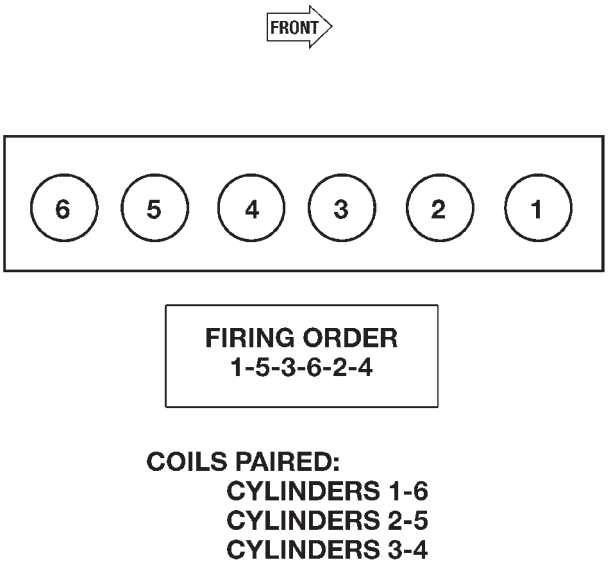

80b6f045

ENGINE FIRING ORDER—4.7L V-8 ENGINE

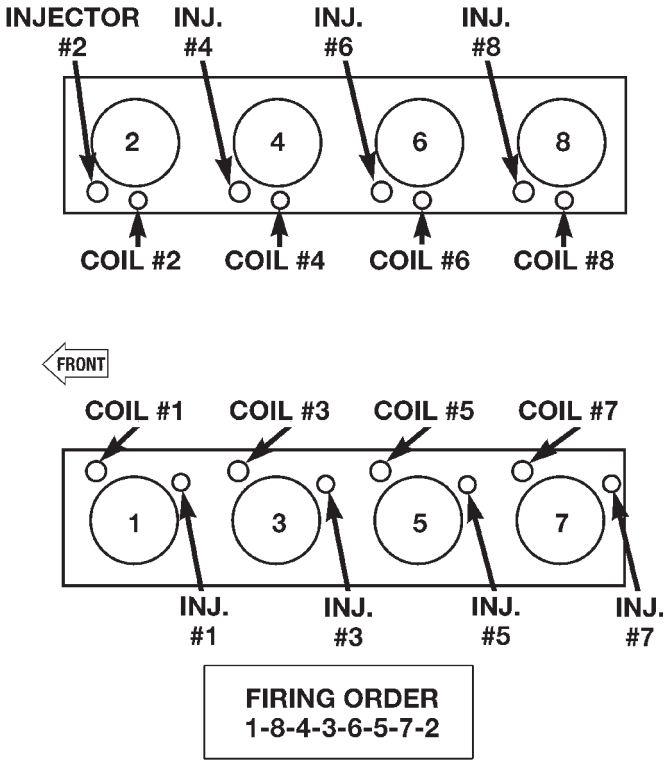

80b6f043

IGNITION COIL RESISTANCE—4.0L ENGINE

PRIMARY RESISTANCE 21-27°C (70-80°F)
0.71 - 0.88 Ohms

IGNITION COIL RESISTANCE—4.7L V-8 ENGINE

PRIMARY RESISTANCE 21-27°C (70-80°F)	SECONDARY RESISTANCE 21-27°C (70-80°F)
0.6 - 0.9 Ohms	6,000 - 9,000 Ohms

IGNITION TIMING

All ignition timing functions are controlled by the Powertrain Control Module (PCM). Mechanical adjustments are not needed and can't be made.

On the 4.0L 6–cylinder engine, do not attempt to rotate the oil pump drive to adjust timing. This adjustment is used for fuel synchronization after camshaft position sensor replacement.

SPECIFICATIONS (Continued)

SPARK PLUGS

ENGINE	PLUG TYPE	ELECTRODE GAP
4.0L 6-CYL.	RC12ECC	0.89 mm (.035 in.)
4.7L V-8	RC12MCC4	1.01 mm (.040 in.)

TORQUE - IGNITION SYSTEM

DESCRIPTION	N-m	Ft. Lbs.	In. Lbs.
Crankshaft Position Sensor Bolts—4.0L Engine	7		60
Crankshaft Position Sensor Bolt—4.7L V-8 Engine	28	21	
Camshaft Position Sensor–to–base bolts—4.0L Engine	2		15
Camshaft Position Sensor Bolt—4.7L V-8 Engine	12		106
Oil Pump Drive Hold-down Bolt—4.0L Engine	23	17	
Ignition Coil Rail Mounting Bolts—4.0L Engine	29		250
Ignition Coil Mounting Nut—4.7L V-8 Engine	8		70
Spark Plugs—4.0L Engine	35-41	26-30	
Spark Plugs—4.7L V-8 Engine	27	20	

AUTO SHUT DOWN RELAY

DESCRIPTION

The 5–pin, 12–volt, Automatic Shutdown (ASD) relay is located in the Power Distribution Center (PDC). Refer to label on PDC cover for relay location.

OPERATION - PCM OUTPUT

The ASD relay supplies battery voltage (12+ volts) to the fuel injectors and ignition coil(s). With certain emissions packages it also supplies 12–volts to the oxygen sensor heating elements.

The ground circuit for the coil within the ASD relay is controlled by the Powertrain Control Module (PCM). The PCM operates the ASD relay by switching its ground circuit on and off.

The ASD relay will be shut–down, meaning the 12–volt power supply to the ASD relay will be de-activated by the PCM if:

- the ignition key is left in the ON position. This is if the engine has not been running for approximately 1.8 seconds.
- there is a crankshaft position sensor signal to the PCM that is lower than pre-determined values.

OPERATION - ASD SENSE - PCM INPUT

A 12 volt signal at this input indicates to the PCM that the ASD has been activated. The relay is used to connect the oxygen sensor heater element, ignition coil and fuel injectors to 12 volt + power supply.

This input is used only to sense that the ASD relay is energized. If the Powertrain Control Module (PCM) does not see 12 volts at this input when the ASD should be activated, it will set a Diagnostic Trouble Code (DTC).

REMOVAL

The ASD relay is located in the Power Distribution Center (PDC) (Fig. 1). Refer to label on PDC cover for relay location.

(1) Remove PDC cover.
(2) Remove relay from PDC.

AUTO SHUT DOWN RELAY (Continued)

(3) Check condition of relay terminals and PDC connector terminals for damage or corrosion. Repair if necessary before installing relay.

(4) Check for pin height (pin height should be the same for all terminals within the PDC connector). Repair if necessary before installing relay.

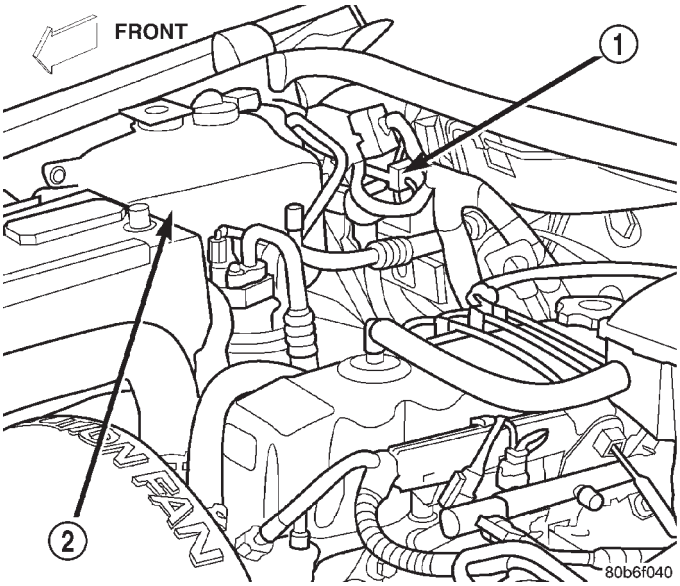

Fig. 1 Power Distribution Center (PDC) Location

1 - PCM
2 - COOLANT TANK

INSTALLATION

The ASD relay is located in the Power Distribution Center (PDC) (Fig. 1). Refer to label on PDC cover for relay location.

(1) Install relay to PDC.

(2) Install cover to PDC.

CAMSHAFT POSITION SENSOR

DESCRIPTION - 4.0L

The Camshaft Position Sensor (CMP) on the 4.0L 6–cylinder engine is bolted to the top of the oil pump drive shaft assembly (Fig. 2). The sensor and drive shaft assembly is located on the right side of the engine near the oil filter (Fig. 3).

DESCRIPTION - 4.7L

The Camshaft Position Sensor (CMP) on the 4.7L V–8 engine is bolted to the front/top of the right cylinder head (Fig. 4).

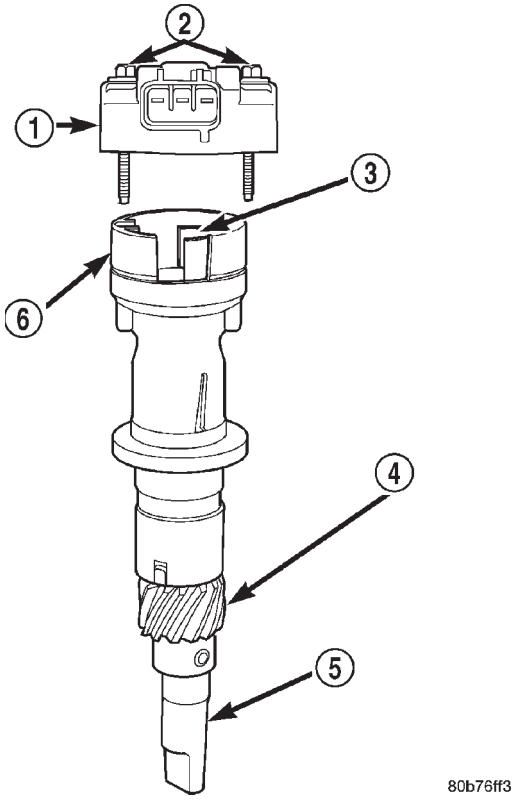

Fig. 2 CMP and Oil Pump Drive Shaft—4.0L Engine

1 - CAMSHAFT POSITION SENSOR
2 - MOUNTING BOLTS (2)
3 - PULSE RING
4 - DRIVE GEAR (TO CAMSHAFT)
5 - OIL PUMP DRIVESHAFT
6 - SENSOR BASE (OIL PUMP DRIVESHAFT ASSEMBLY)

OPERATION - 4.0L

The CMP sensor contains a hall effect device called a sync signal generator to generate a fuel sync signal. This sync signal generator detects a rotating pulse ring (shutter) on the oil pump drive shaft (Fig. 2). The pulse ring rotates 180 degrees through the sync signal generator. Its signal is used in conjunction with the crankshaft position sensor to differentiate between fuel injection and spark events. It is also used to synchronize the fuel injectors with their respective cylinders.

When the leading edge of the pulse ring (shutter) enters the sync signal generator, the following occurs: The interruption of magnetic field causes the voltage to switch high resulting in a sync signal of approximately 5 volts.

When the trailing edge of the pulse ring (shutter) leaves the sync signal generator, the following occurs: The change of the magnetic field causes the sync signal voltage to switch low to 0 volts.

CAMSHAFT POSITION SENSOR (Continued)

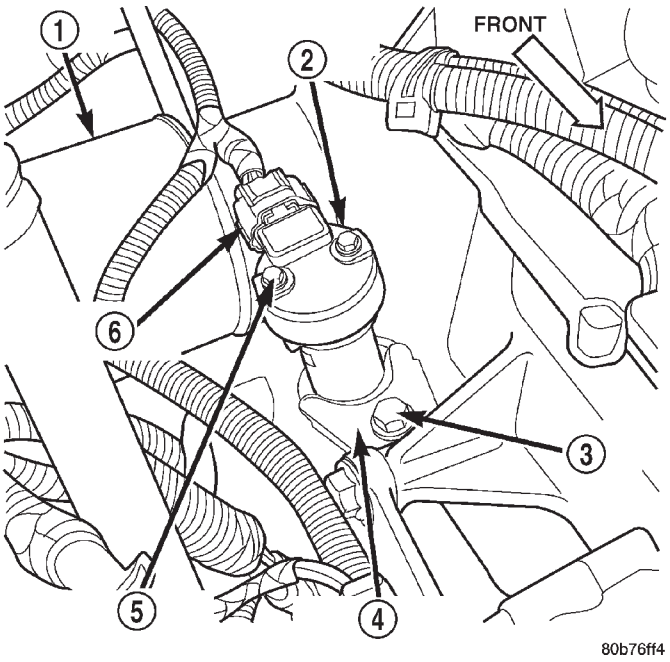

Fig. 3 CMP Location—4.0L Engine

1 - OIL FILTER
2 - CAMSHAFT POSITION SENSOR
3 - CLAMP BOLT
4 - HOLD-DOWN CLAMP
5 - MOUNTING BOLTS (2)
6 - ELEC. CONNECTOR

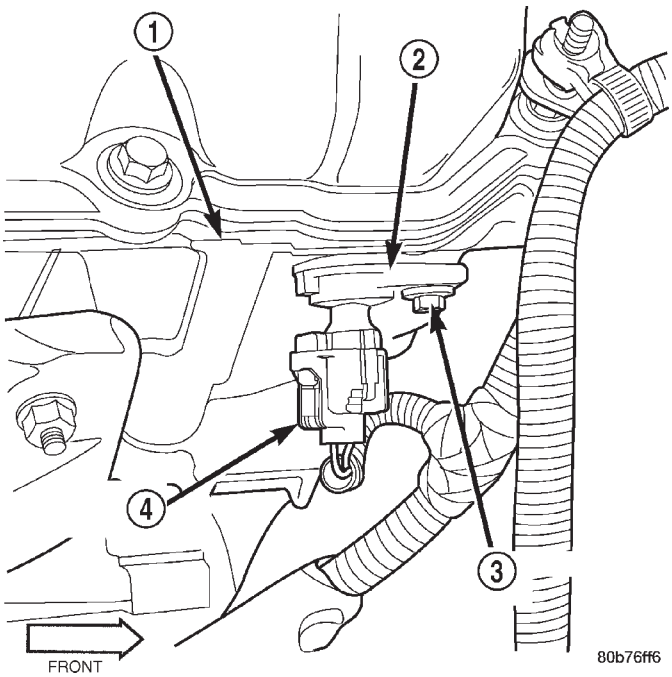

Fig. 4 CMP Location—4.7L Engine

1 - RIGHT CYLINDER HEAD
2 - CAMSHAFT POSITION SENSOR
3 - MOUNTING BOLT
4 - ELEC. CONNECTOR

OPERATION - 4.7L

The CMP sensor contains a hall effect device called a sync signal generator to generate a fuel sync signal. This sync signal generator detects notches located on a tonewheel. The tonewheel is located at the front of the camshaft for the right cylinder head (Fig. 5). As the tonewheel rotates, the notches pass through the sync signal generator. The pattern of the notches (viewed counter-clockwise from front of engine) is: 1 notch, 2 notches, 3 notches, 3 notches, 2 notches 1 notch, 3 notches and 1 notch. The signal from the CMP sensor is used in conjunction with the crankshaft position sensor to differentiate between fuel injection and spark events. It is also used to synchronize the fuel injectors with their respective cylinders.

REMOVAL - 4.0L

The Camshaft Position Sensor (CMP) on the 4.0L 6–cylinder engine is bolted to the top of the oil pump drive shaft assembly (Fig. 6). The sensor and drive shaft assembly is located on the right side of the engine near the oil filter (Fig. 7).

The rotational position of oil pump drive determines fuel synchronization only. It does not determine ignition timing.

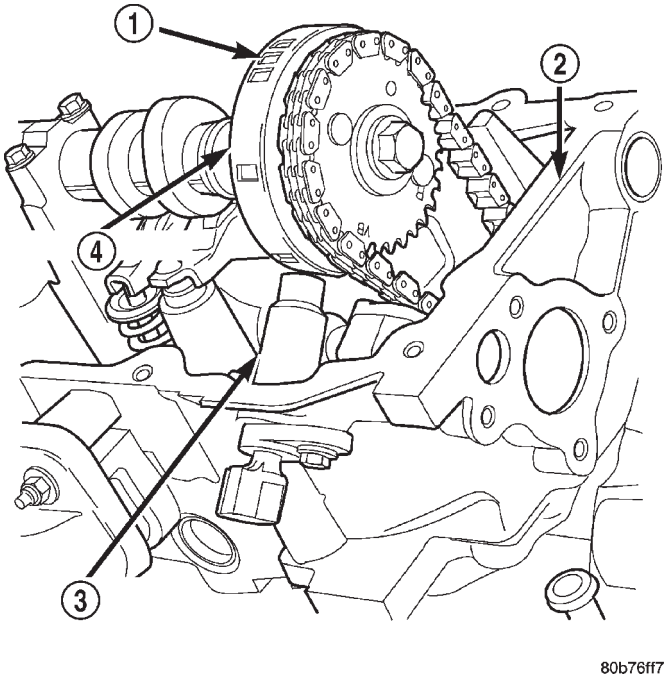

Fig. 5 CMP Sensor and Tonewheel—4.7L Engine

1 - NOTCHES
2 - RIGHT CYLINDER HEAD
3 - CAMSHAFT POSITION SENSOR
4 - TONEWHEEL

CAMSHAFT POSITION SENSOR (Continued)

NOTE: Do not attempt to rotate the oil pump drive to modify ignition timing.

Two different procedures are used for removal and installation. The first procedure will detail removal and installation of the sensor only. The second procedure will detail removal and installation of the sensor and oil pump drive shaft assembly. The second procedure is to be used if the engine has been disassembled.

An internal oil seal is used in the drive shaft housing that prevents engine oil at the bottom of the sensor. The seal is not serviceable.

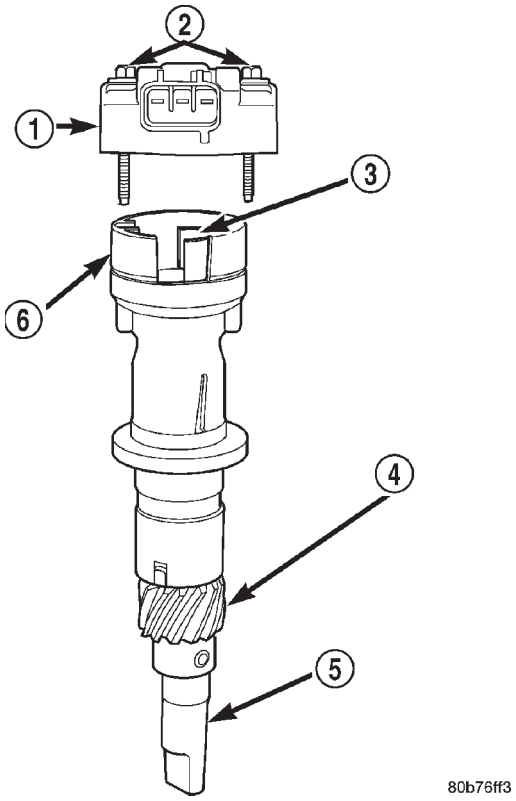

Fig. 6 CMP and Oil Pump Drive Shaft - 4.0L Engine

1 - CAMSHAFT POSITION SENSOR
2 - MOUNTING BOLTS (2)
3 - PULSE RING
4 - DRIVE GEAR (TO CAMSHAFT)
5 - OIL PUMP DRIVESHAFT
6 - SENSOR BASE (OIL PUMP DRIVESHAFT ASSEMBLY)

SENSOR ONLY - 4.0L

(1) Disconnect electrical connector at CMP sensor (Fig. 7).

(2) Remove 2 sensor mounting bolts (Fig. 6) or (Fig. 7).

(3) Remove sensor from oil pump drive.

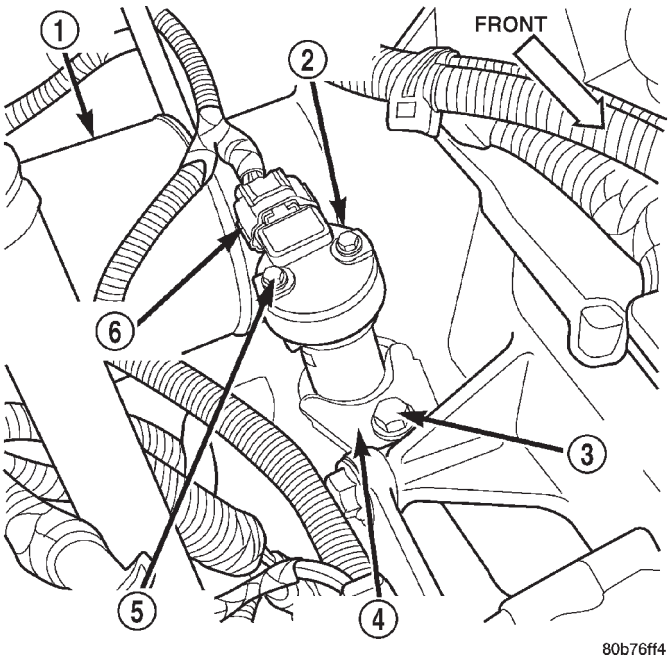

Fig. 7 CMP Location - 4.0L Engine

1 - OIL FILTER
2 - CAMSHAFT POSITION SENSOR
3 - CLAMP BOLT
4 - HOLD-DOWN CLAMP
5 - MOUNTING BOLTS (2)
6 - ELEC. CONNECTOR

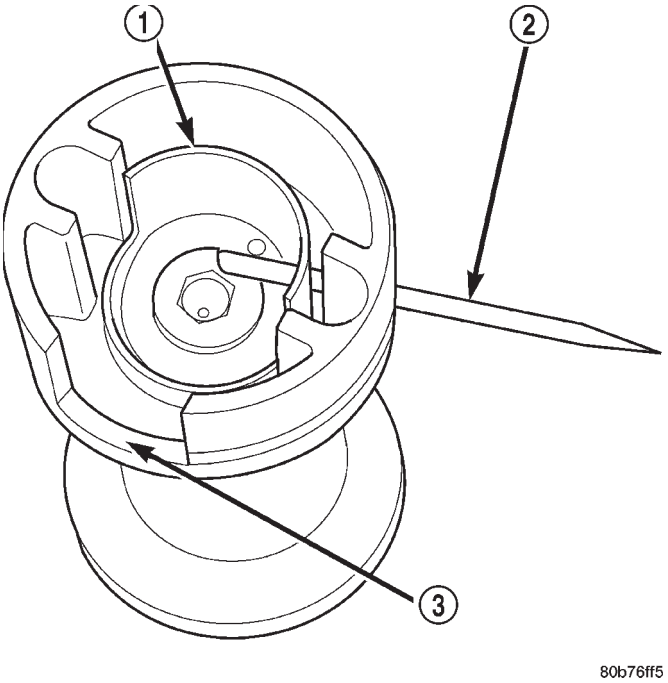

Fig. 8 CMP Pulse Ring Alignment - 4.0L Engine

1 - PULSE RING (SHUTTER)
2 - TOOTHPICK
3 - SENSOR BASE (OIL PUMP DRIVESHAFT ASSEMBLY)

CAMSHAFT POSITION SENSOR (Continued)

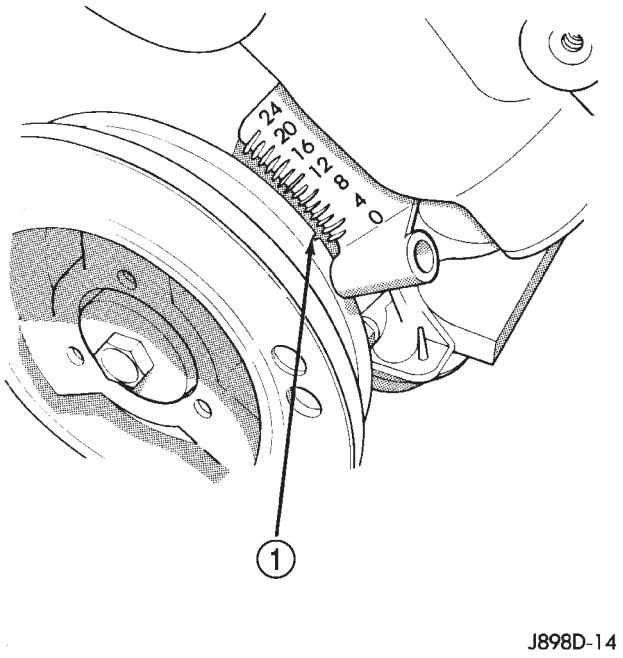

Fig. 9 Align Timing Marks - 4.0L Engine

1 - CRANKSHAFT VIBRATION DAMPER TIMING MARK

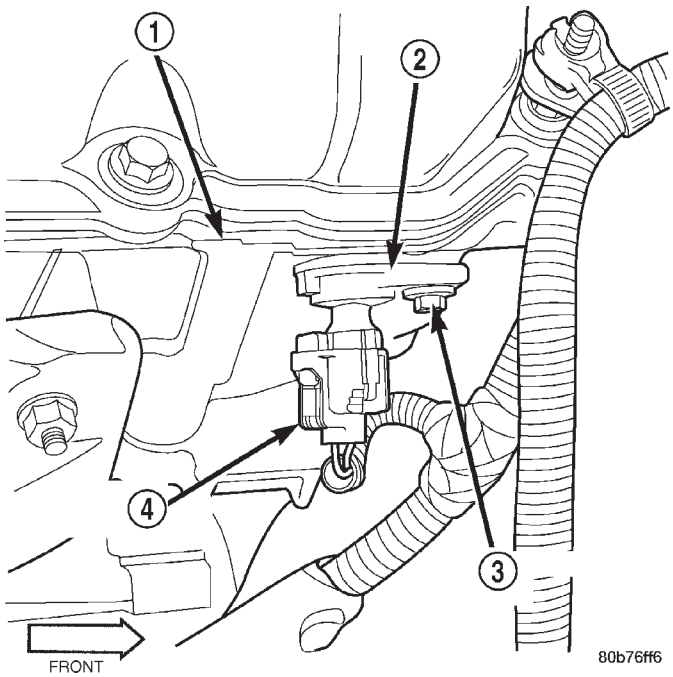

Fig. 10 CMP Location—4.7L Engine

1 - RIGHT CYLINDER HEAD
2 - CAMSHAFT POSITION SENSOR
3 - MOUNTING BOLT
4 - ELEC. CONNECTOR

OIL PUMP DRIVE AND SENSOR - 4.0L

If the CMP and oil pump drive are to be removed and installed, do not allow engine crankshaft or camshaft to rotate. CMP sensor relationship will be lost.

(1) Disconnect electrical connector at CMP sensor (Fig. 7).

(2) Remove 2 sensor mounting bolts (Fig. 6) or (Fig. 7).

(3) Remove sensor from oil pump drive.

(4) Before proceeding to next step, mark and note rotational position of oil pump drive in relationship to engine block. After installation, the CMP sensor should face rear of engine 0°.

(5) Remove hold-down bolt and clamp (Fig. 7).

(6) While pulling assembly from engine, note direction and position of pulse ring (Fig. 6). After removal, look down into top of oil pump and note direction and position of slot at top of oil pump gear.

(7) Remove and discard old oil pump drive-to-engine block gasket.

REMOVAL - 4.7L

The Camshaft Position Sensor (CMP) on the 4.7L V–8 engine is bolted to the front/top of the right cylinder head (Fig. 10).

It is easier to remove/install sensor from under vehicle.

(1) Raise and support vehicle.

(2) Disconnect electrical connector at CMP sensor (Fig. 10).

(3) Remove sensor mounting bolt (Fig. 10).

(4) Carefully pry sensor from cylinder head in a rocking action with two small screwdrivers. **Some 4.7L engines are equipped with a sensor spacer shim. If equipped, this shim will be located at sensor bolt hole between cylinder head and sensor mounting tang (TSB W08–18–00). Save this shim for sensor installation.**

(5) Check condition of sensor o-ring.

INSTALLATION - 4.0L

SENSOR ONLY - 4.0L

The Camshaft Position Sensor (CMP) on the 4.0L 6–cylinder engine is bolted to the top of the oil pump drive shaft assembly (Fig. 6). The sensor and drive shaft assembly is located on the right side of the engine near the oil filter (Fig. 7).

(1) Install sensor to oil pump drive.

(2) Install 2 sensor mounting bolts and tighten to 2 N·m (15 in. lbs.) torque.

(3) Connect electrical connector to CMP sensor.

OIL PUMP DRIVE AND SENSOR - 4.0L

(1) Clean oil pump drive mounting hole area of engine block.

(2) Install new oil pump drive-to-engine block gasket.

CAMSHAFT POSITION SENSOR (Continued)

(3) Temporarily install a toothpick or similar tool through access hole at side of oil pump drive housing. Align toothpick into mating hole on pulse ring (Fig. 8).

(4) Install oil pump drive into engine while aligning into slot on oil pump. Rotate oil pump drive back to its original position and install hold-down clamp and bolt. Finger tighten bolt. Do not do a final tightening of bolt at this time.

(5) If engine crankshaft or camshaft has been rotated, such as during engine tear-down, CMP sensor relationship must be reestablished.

(a) Remove ignition coil rail assembly. Refer to Ignition Coil Removal/Installation.

(b) Remove cylinder number 1 spark plug.

(c) Hold a finger over the open spark plug hole. Rotate engine at vibration dampener bolt until compression (pressure) is felt.

(d) Slowly continue to rotate engine. Do this until timing index mark on vibration damper pulley aligns with top dead center (TDC) mark (0 degree) on timing degree scale (Fig. 9). Always rotate engine in direction of normal rotation. Do not rotate engine backward to align timing marks.

(e) Install oil pump drive into engine while aligning into slot on oil pump. If pump drive will not drop down flush to engine block, the oil pump slot is not aligned. Remove oil pump drive and align slot in oil pump to shaft at bottom of drive. Install into engine. Rotate oil pump drive back to its original position and install hold-down clamp and bolt. Finger tighten bolt. Do not do a final tightening of bolt at this time.

(f) Remove toothpick from housing.

(6) Install sensor to oil pump drive. After installation, the CMP sensor should face rear of engine 0°.

(7) Install 2 sensor mounting bolts and tighten to 2 N·m (15 in. lbs.) torque.

(8) Connect electrical connector to CMP sensor.

(9) If removed, install spark plug and ignition coil rail.

To verify correct rotational position of oil pump drive, the DRB scan tool must be used.

WARNING: WHEN PERFORMING THE FOLLOWING TEST, THE ENGINE WILL BE RUNNING. BE CAREFUL NOT TO STAND IN LINE WITH THE FAN BLADES OR FAN BELT. DO NOT WEAR LOOSE CLOTHING.

(10) Connect DRB scan tool to data link connector. The data link connector is located in passenger compartment, below and to left of steering column.

(11) Gain access to SET SYNC screen on DRB.

(12) Follow directions on DRB screen and start engine. Bring to operating temperature (engine must be in “closed loop” mode).

(13) With engine running at **idle speed**, the words IN RANGE should appear on screen along with 0°. This indicates correct position of oil pump drive.

(14) If a plus (+) or a minus (-) is displayed next to degree number, and/or the degree displayed is not zero, loosen but do not remove hold-down clamp bolt. Rotate oil pump drive until IN RANGE appears on screen. Continue to rotate oil pump drive until achieving as close to 0° as possible.

The degree scale on SET SYNC screen of DRB is referring to fuel synchronization only. **It is not referring to ignition timing.** Because of this, do not attempt to adjust ignition timing using this method. Rotating oil pump drive will have no effect on ignition timing. All ignition timing values are controlled by powertrain control module (PCM).

(15) Tighten hold-down clamp bolt to 23 N·m (17 ft. lbs.) torque.

INSTALLATION - 4.7L

The Camshaft Position Sensor (CMP) on the 4.7L V–8 engine is bolted to the front/top of the right cylinder head (Fig. 10).

(1) Clean out machined hole in cylinder head.

(2) Apply a small amount of engine oil to sensor o-ring.

(3) Install sensor into cylinder head with a slight rocking action. Do not twist sensor into position as damage to o-ring may result.

CAUTION: Before tightening sensor mounting bolt, be sure sensor is completely flush to cylinder head. If sensor is not flush, damage to sensor mounting tang may result.

(4) Install mounting bolt and tighten to 12 N·m (106 in. lbs.) torque.

(5) Connect electrical connector to sensor.

(6) Lower vehicle.

COIL RAIL

DESCRIPTION

A one-piece coil rail assembly containing three individual coils is used on the 4.0L 6–cylinder engine (Fig. 11). The coil rail must be replaced as one assembly. The bottom of the coil is equipped with 6 individual rubber boots (Fig. 11) to seal the 6 spark plugs to the coil. Inside each rubber boot is a spring. The spring is used for a mechanical contact between the coil and the top of the spark plug. These rubber boots and springs are a permanent part of the coil and are not serviced separately.

(1) The coil is bolted directly to the cylinder head (Fig. 12). One electrical connector (located at rear of coil) is used for all three coils.

COIL RAIL (Continued)

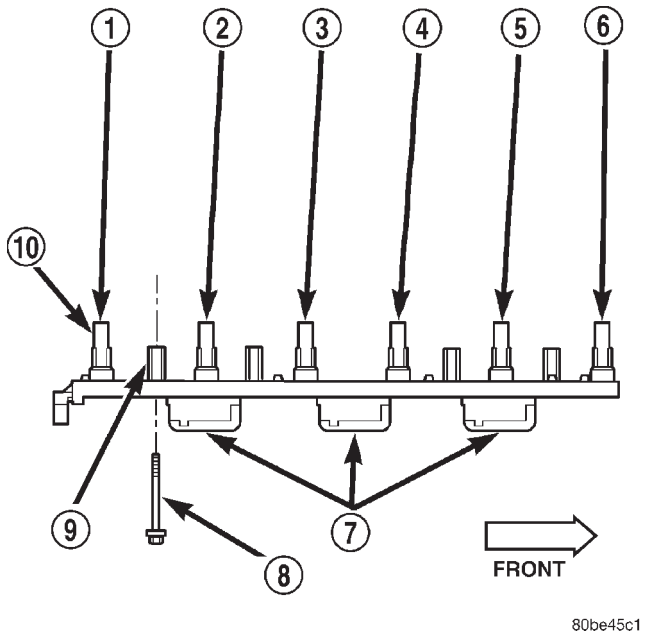

Fig. 11 Ignition Coil Assembly—4.0L 6–Cylinder Engine

1 - CYL. #6
2 - CYL. #5
3 - CYL. #4
4 - CYL. #3
5 - CYL. #2
6 - CYL. #1
7 - COILS (3)
8 - MOUNTING BOLTS (4)
9 - BOLT BASES (4)
10 - RUBBER BOOTS (6)

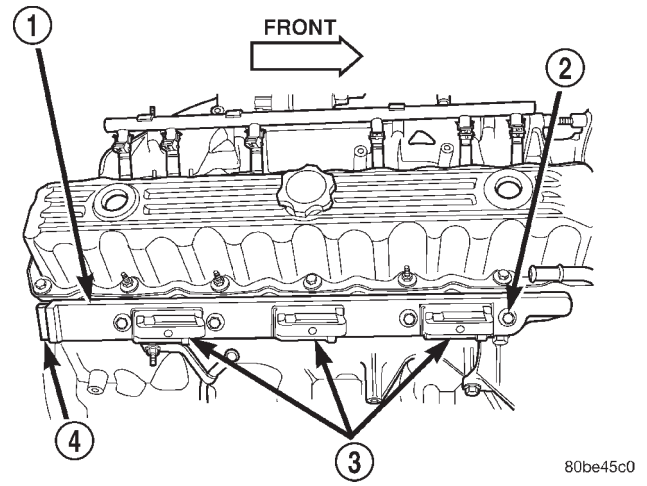

Fig. 12 Coil Location—4.0L Engine

1 - COIL RAIL
2 - COIL MOUNTING BOLTS (4)
3 - COIL
4 - COIL ELECTRICAL CONNECTION

OPERATION

Although cylinder firing order is the same as 4.0L Jeep engines of previous years, spark plug firing is not. The 3 coils dual-fire the spark plugs on cylinders 1-6, 2-5 and/or 3-4. When one cylinder is being fired (on compression stroke), the spark to the opposite cylinder is being wasted (on exhaust stroke).

Battery voltage is supplied to the three ignition coils from the ASD relay. The Powertrain Control Module (PCM) opens and closes the ignition coil ground circuit for ignition coil operation.

Base ignition timing is not adjustable. By controlling the coil ground circuit, the PCM is able to set the base timing and adjust the ignition timing advance. This is done to meet changing engine operating conditions.

The ignition coil is not oil filled. The windings are embedded in an epoxy compound. This provides heat and vibration resistance that allows the ignition coil to be mounted on the engine.

Because of coil design, spark plug cables (secondary cables) are not used. The cables are integral within the coil rail.

REMOVAL

A one-piece coil rail assembly containing three individual coils is used on the 4.0L engine (Fig. 13). The coil rail must be replaced as one assembly. The bottom of the coil is equipped with 6 individual rubber boots (Fig. 13) to seal the 6 spark plugs to the coil. Inside each rubber boot is a spring. The spring is used for an electrical contact between the coil and the top of the spark plug. These rubber boots and springs are a permanent part of the coil and are not serviced separately.

(1) Disconnect negative battery cable at battery.

(2) The coil is bolted directly to the cylinder head. Remove 4 coil mounting bolts (Fig. 14).

(3) Carefully pry up coil assembly from spark plugs. Do this by prying alternately at each end of coil until rubber boots have disengaged from all spark plugs. If boots will not release from spark plugs, use a commercially available spark plug boot removal tool. Twist and loosen a few boots from a few spark plugs to help remove coil.

(4) After coil has cleared spark plugs, position coil for access to primary electrical connector. Disconnect connector from coil by pushing slide tab outwards to right side of vehicle (Fig. 15). After slide tab has been positioned outwards, push in on secondary release lock (Fig. 15) on side of connector and pull connector from coil.

(5) Remove coil from vehicle.

COIL RAIL (Continued)

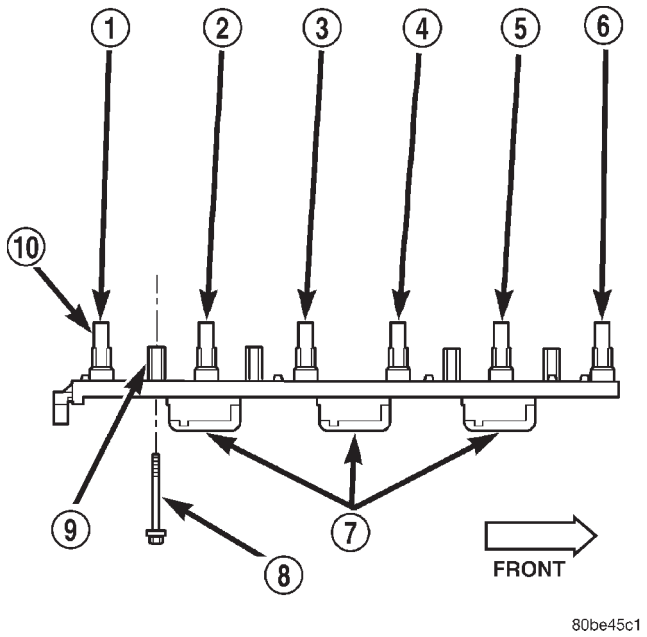

Fig. 13 Ignition Coil Assembly—4.0L 6–Cylinder Engine

1 - CYL. #6
2 - CYL. #5
3 - CYL. #4
4 - CYL. #3
5 - CYL. #2
6 - CYL. #1
7 - COILS (3)
8 - MOUNTING BOLTS (4)
9 - BOLT BASES (4)
10 - RUBBER BOOTS (6)

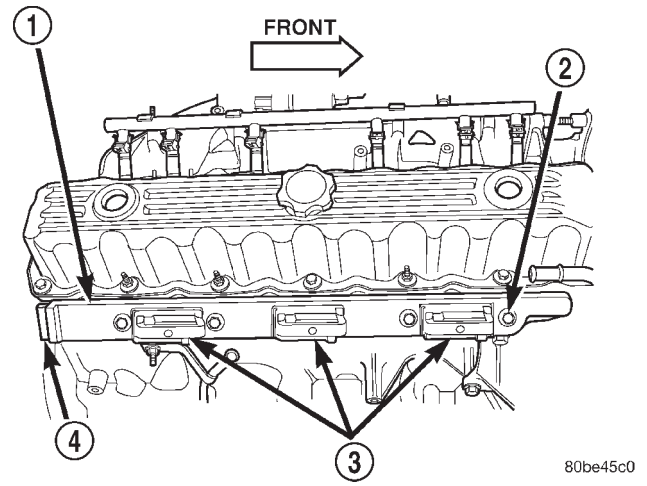

Fig. 14 Ignition Coil Rail Location—4.0L 6–Cylinder Engine

1 - COIL RAIL
2 - COIL MOUNTING BOLTS (4)
3 - COIL
4 - COIL ELECTRICAL CONNECTION

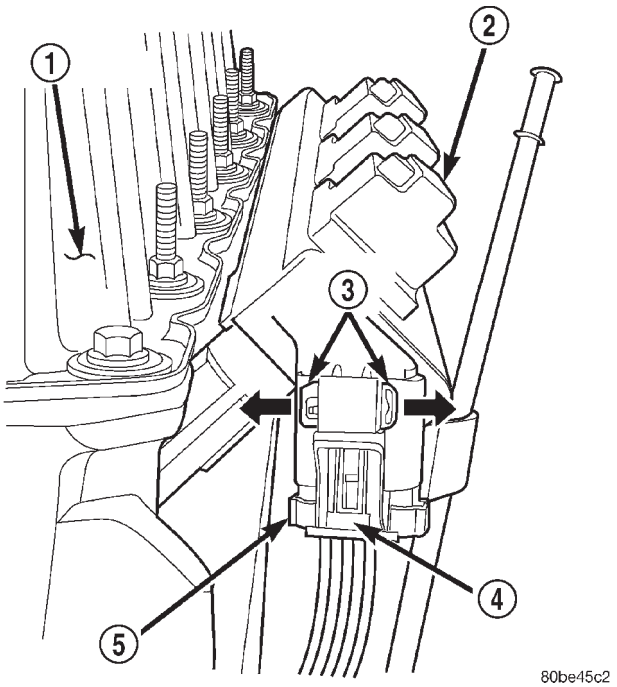

Fig. 15 Ignition Coil Electrical Connector—4.0L 6–Cylinder Engine

1 - REAR OF VALVE COVER
2 - COIL RAIL
3 - SLIDE TAB
4 - RELEASE LOCK
5 - COIL CONNECTOR

INSTALLATION

(1) Position ignition coil rubber boots to all spark plugs. Push down on coil assembly until bolt bases have contacted cylinder head

(2) Install 4 coil mounting bolts. Loosely tighten 4 bolts just enough to allow bolt bases to contact cylinder head. Do a final tightening of each bolt in steps down to 29 N·m (250 in. lbs.) torque. Do not apply full torque to any bolt first.

(3) Connect engine harness connector to coil by snapping into position. Move slide tab towards engine (Fig. 15) for a positive lock.

(4) Connect negative battery cable to battery.

IGNITION COIL

DESCRIPTION

The 4.7L V–8 engine uses 8 dedicated, and individually fired coil (Fig. 16) for each spark plug. Each coil is mounted directly to the top of each spark plug (Fig. 17).

OPERATION

Battery voltage is supplied to the 8 ignition coils from the ASD relay. The Powertrain Control Module

IGNITION COIL (Continued)

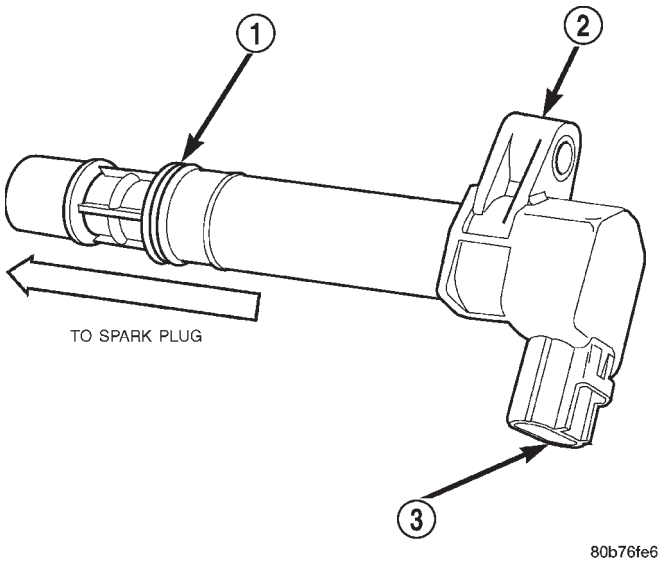

Fig. 16 Ignition Coil—4.7L Engine

1 - O-RING
2 - IGNITION COIL
3 - ELECTRICAL CONNECTOR

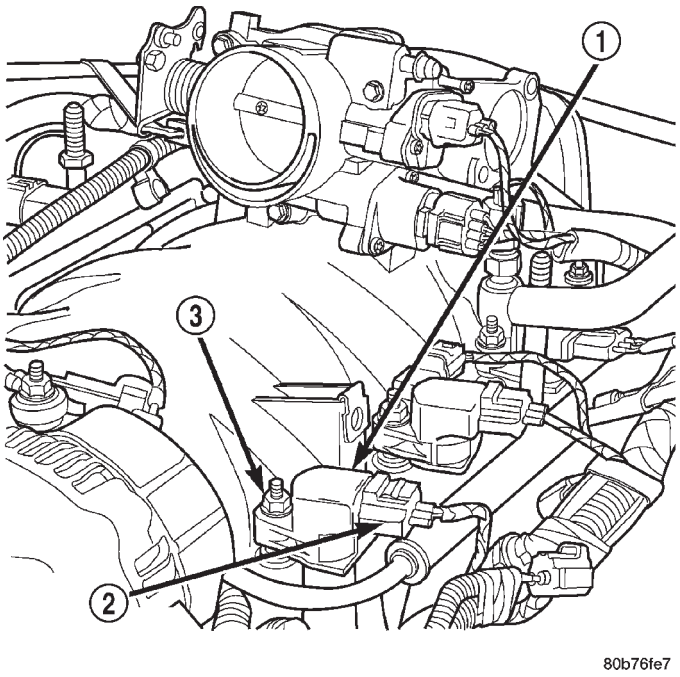

Fig. 17 Ignition Coil Location—4.7L Engine

1 - IGNITION COIL
2 - COIL ELECTRICAL CONNECTOR
3 - COIL MOUNTING STUD/NUT

(PCM) opens and closes each ignition coil ground circuit at a determined time for ignition coil operation.

Base ignition timing is not adjustable. By controlling the coil ground circuit, the PCM is able to set the base timing and adjust the ignition timing advance. This is done to meet changing engine operating conditions.

The ignition coil is not oil filled. The windings are embedded in an epoxy compound. This provides heat and vibration resistance that allows the ignition coil to be mounted on the engine.

Because of coil design, spark plug cables (secondary cables) are not used.

REMOVAL

An individual ignition coil is used for each spark plug (Fig. 18). The coil fits into machined holes in the cylinder head. A mounting stud/nut secures each coil to the top of the intake manifold (Fig. 19). The bottom of the coil is equipped with a rubber boot to seal the spark plug to the coil. Inside each rubber boot is a spring. The spring is used for a mechanical contact between the coil and the top of the spark plug. These rubber boots and springs are a permanent part of the coil and are not serviced separately. An o-ring (Fig. 18) is used to seal the coil at the opening into the cylinder head.

(1) Depending on which coil is being removed, the throttle body air intake tube or intake box may need to be removed to gain access to coil.

(2) Disconnect electrical connector (Fig. 19) from coil by pushing downward on release lock on top of connector and pull connector from coil.

(3) Clean area at base of coil with compressed air before removal.

(4) Remove coil mounting nut from mounting stud (Fig. 19).

(5) Carefully pull up coil from cylinder head opening with a slight twisting action.

(6) Remove coil from vehicle.

IGNITION COIL (Continued)

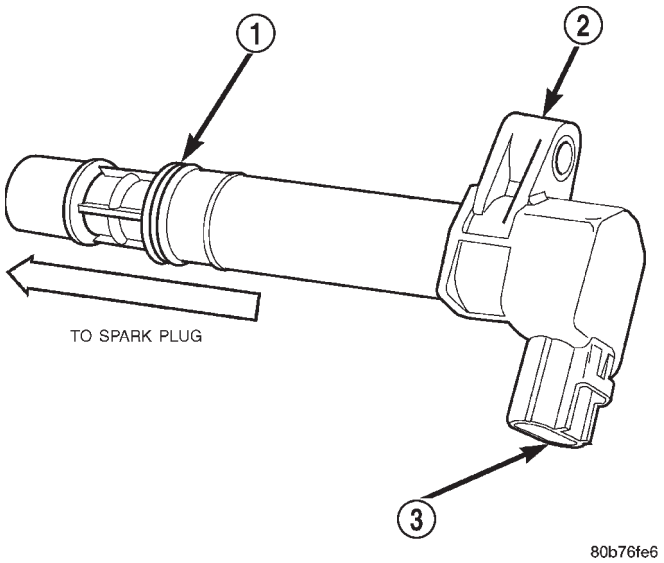

Fig. 18 Ignition Coil—4.7L V–8

1 - O-RING
2 - IGNITION COIL
3 - ELECTRICAL CONNECTOR

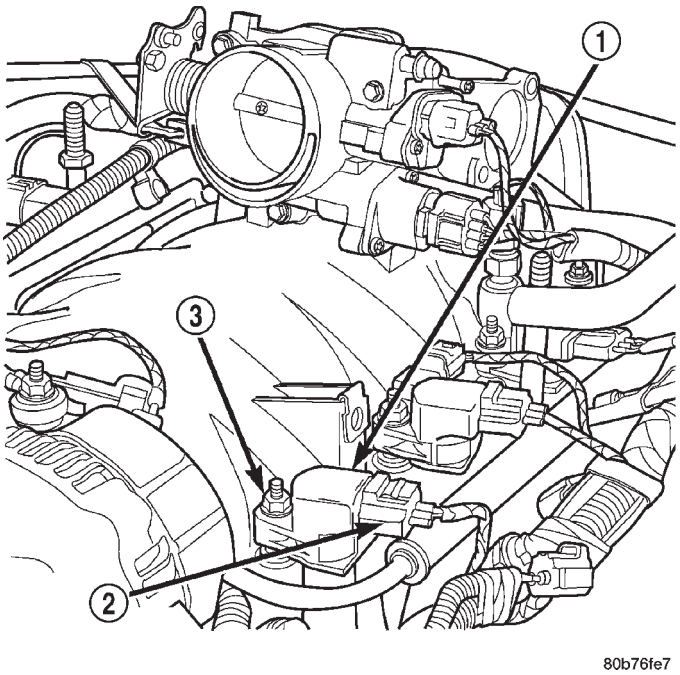

Fig. 19 Ignition Coil

1 - IGNITION COIL
2 - COIL ELECTRICAL CONNECTOR
3 - COIL MOUNTING STUD/NUT

INSTALLATION

(1) Using compressed air, blow out any dirt or contaminants from around top of spark plug.

(2) Check condition of coil o-ring and replace as necessary. To aid in coil installation, apply silicone to coil o-ring.

(3) Position ignition coil into cylinder head opening and push onto spark plug. Do this while guiding coil base over mounting stud.

(4) Install mounting stud nut and tighten to 8 N·m (70 in. lbs.) torque.

(5) Connect electrical connector to coil by snapping into position.

(6) If necessary, install throttle body air tube or box.

IGNITION COIL CAPACITOR

DESCRIPTION

Two coil capacitors are used. One of them is located near the center of, and on the left side of the intake manifold (Fig. 20). The other capacitor is located near the center of, and on the right side of the intake manifold.

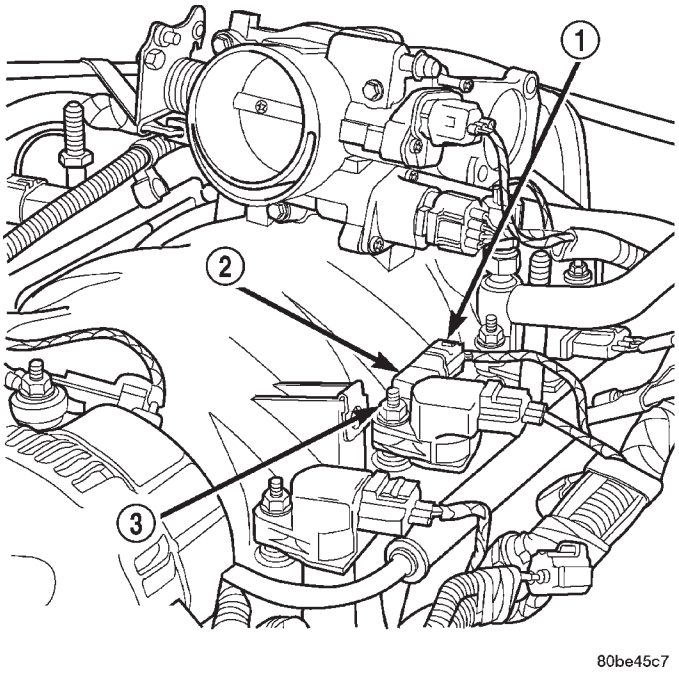

Fig. 20 Coil Capacitor (Left Side Shown)

1 - ELECTRICAL CONNECTOR
2 - COIL CAPACITOR
3 - MOUNTING NUT

OPERATION

The 2 coil capacitors are used to prevent high-voltage spikes from interfering with the operation of certain powertrain sensors. They are also used to help prevent radio interference.

IGNITION COIL CAPACITOR (Continued)

REMOVAL

Two coil capacitors are used. One of them is located near the center of, and on the left side of the intake manifold (Fig. 21). The other capacitor is located near the center of, and on the right side of the intake manifold.

(1) Disconnect electrical connector at coil capacitor (Fig. 21).
(2) Remove mounting nut.
(3) Remove capacitor from mounting stud.

INSTALLATION

(1) Position capacitor to manifold mounting stud.
(2) Install nut and tighten to 8 N·m (70 in. lbs.) torque.
(3) Connect electrical connector to capacitor (Fig. 21).

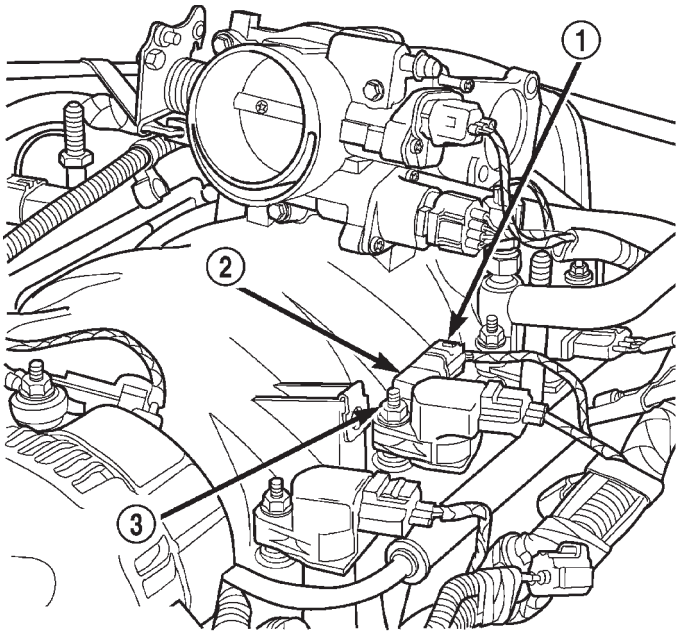

80be45c7

Fig. 21 Coil Capacitor (Left Side Shown)

1 - ELECTRICAL CONNECTOR
2 - COIL CAPACITOR
3 - MOUNTING NUT

SPARK PLUG

DESCRIPTION

Both the 4.0L 6–cylinder and the 4.7L V-8 engine use resistor type spark plugs. 4.7L V-8 engines are equipped with “fired in suppressor seal” type spark plugs using a copper core ground electrode.

Because of the use of an aluminum cylinder head on the 4.7L engine, spark plug torque is very critical.

To prevent possible pre-ignition and/or mechanical engine damage, the correct type/heat range/number spark plug must be used.

OPERATION

Plugs on both engines have resistance values ranging from 6,000 to 20,000 ohms (when checked with at least a 1000 volt spark plug tester). **Do not use an ohmmeter to check the resistance values of the spark plugs. Inaccurate readings will result.** Remove the spark plugs and examine them for burned electrodes and fouled, cracked or broken porcelain insulators. Keep plugs arranged in the order in which they were removed from the engine. A single plug displaying an abnormal condition indicates that a problem exists in the corresponding cylinder. Replace spark plugs at the intervals recommended in Group O, Lubrication and Maintenance.

Spark plugs that have low mileage may be cleaned and reused if not otherwise defective, carbon or oil fouled. Also refer to Spark Plug Conditions.

CAUTION: Never use a motorized wire wheel brush to clean the spark plugs. Metallic deposits will remain on the spark plug insulator and will cause plug misfire.

DIAGNOSIS AND TESTING - SPARK PLUG CONDITIONS

NORMAL OPERATING

The few deposits present on the spark plug will probably be light tan or slightly gray in color. This is evident with most grades of commercial gasoline (Fig. 22). There will not be evidence of electrode burning. Gap growth will not average more than approximately 0.025 mm (.001 in) per 3200 km (2000 miles) of operation. Spark plugs that have normal wear can usually be cleaned, have the electrodes filed, have the gap set and then be installed.

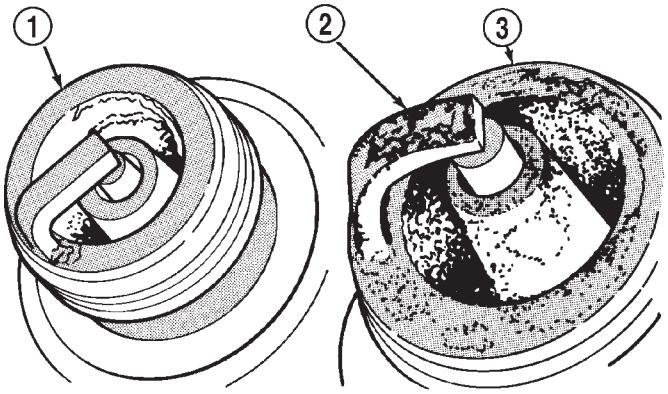

J908D-15

Fig. 22 Normal Operation and Cold (Carbon) Fouling

1 - NORMAL
2 - DRY BLACK DEPOSITS
3 - COLD (CARBON) FOULING

SPARK PLUG (Continued)

Some fuel refiners in several areas of the United States have introduced a manganese additive (MMT) for unleaded fuel. During combustion, fuel with MMT causes the entire tip of the spark plug to be coated with a rust colored deposit. This rust color can be misdiagnosed as being caused by coolant in the combustion chamber. Spark plug performance may be affected by MMT deposits.

COLD FOULING/CARBON FOULING

Cold fouling is sometimes referred to as carbon fouling. The deposits that cause cold fouling are basically carbon (Fig. 22). A dry, black deposit on one or two plugs in a set may be caused by sticking valves or defective spark plug cables. Cold (carbon) fouling of the entire set of spark plugs may be caused by a clogged air cleaner element or repeated short operating times (short trips).

WET FOULING OR GAS FOULING

A spark plug coated with excessive wet fuel or oil is wet fouled. In older engines, worn piston rings, leaking valve guide seals or excessive cylinder wear can cause wet fouling. In new or recently overhauled engines, wet fouling may occur before break-in (normal oil control) is achieved. This condition can usually be resolved by cleaning and reinstalling the fouled plugs.

OIL OR ASH ENCRUSTED

If one or more spark plugs are oil or oil ash encrusted (Fig. 23), evaluate engine condition for the cause of oil entry into that particular combustion chamber.

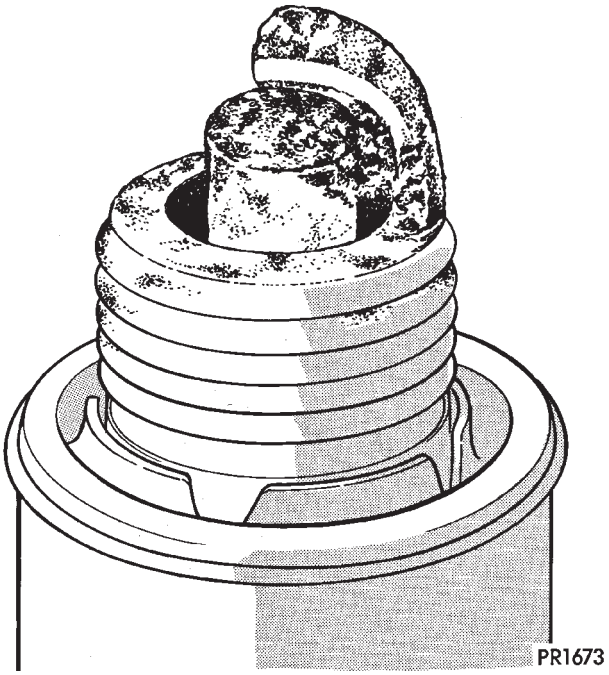

Fig. 23 Oil or Ash Encrusted

ELECTRODE GAP BRIDGING

Electrode gap bridging may be traced to loose deposits in the combustion chamber. These deposits accumulate on the spark plugs during continuous stop-and-go driving. When the engine is suddenly subjected to a high torque load, deposits partially liquefy and bridge the gap between electrodes (Fig. 24). This short circuits the electrodes. Spark plugs with electrode gap bridging can be cleaned using standard procedures.

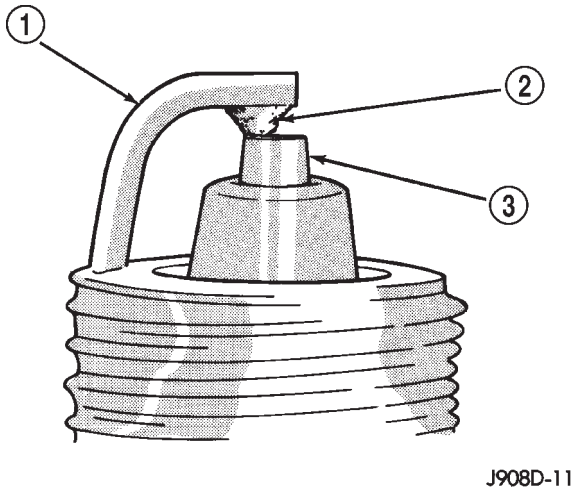

Fig. 24 Electrode Gap Bridging

1 - GROUND ELECTRODE
2 - DEPOSITS
3 - CENTER ELECTRODE

SCAVENGER DEPOSITS

Fuel scavenger deposits may be either white or yellow (Fig. 25). They may appear to be harmful, but this is a normal condition caused by chemical additives in certain fuels. These additives are designed to change the chemical nature of deposits and decrease spark plug misfire tendencies. Notice that accumulation on the ground electrode and shell area may be heavy, but the deposits are easily removed. Spark plugs with scavenger deposits can be considered normal in condition and can be cleaned using standard procedures.

CHIPPED ELECTRODE INSULATOR

A chipped electrode insulator usually results from bending the center electrode while adjusting the spark plug electrode gap. Under certain conditions, severe detonation can also separate the insulator from the center electrode (Fig. 26). Spark plugs with this condition must be replaced.

PRE-IGNITION DAMAGE

Pre-ignition damage is usually caused by excessive combustion chamber temperature. The center electrode dissolves first and the ground electrode dis-

SPARK PLUG (Continued)

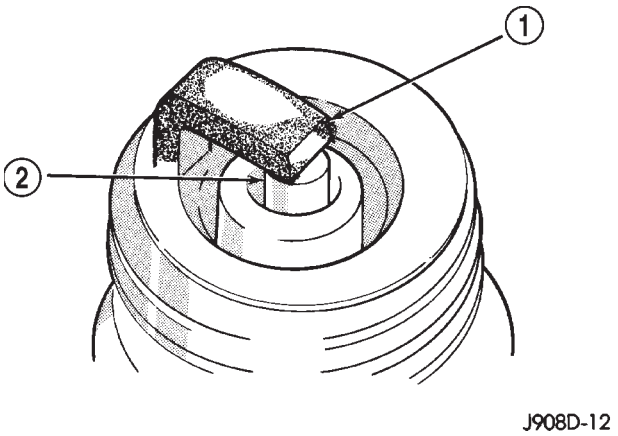

Fig. 25 Scavenger Deposits

1 - GROUND ELECTRODE COVERED WITH WHITE OR YELLOW DEPOSITS
2 - CENTER ELECTRODE

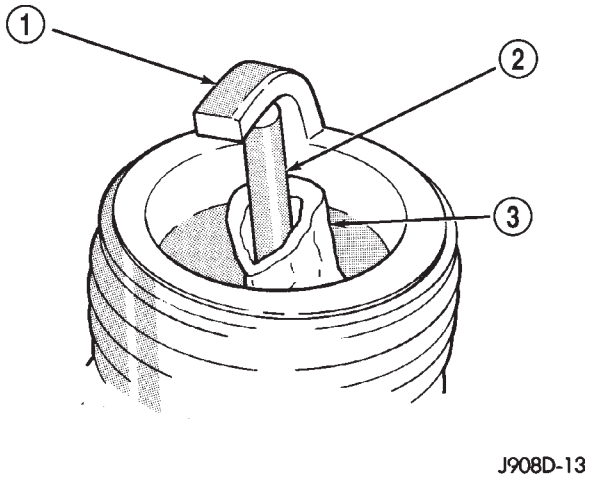

Fig. 26 Chipped Electrode Insulator

1 - GROUND ELECTRODE
2 - CENTER ELECTRODE
3 - CHIPPED INSULATOR

solves somewhat latter (Fig. 27). Insulators appear relatively deposit free. Determine if the spark plug has the correct heat range rating for the engine. Determine if ignition timing is over advanced or if other operating conditions are causing engine overheating. (The heat range rating refers to the operating temperature of a particular type spark plug. Spark plugs are designed to operate within specific temperature ranges. This depends upon the thickness and length of the center electrodes porcelain insulator.)

CAUTION: If the engine is equipped with copper core ground electrode spark plugs, they must be replaced with the same type/number spark plug as the original. If another spark plug is substituted, pre-ignition will result.

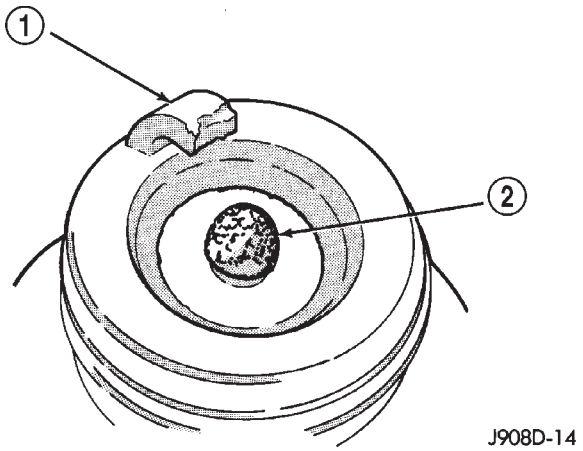

Fig. 27 Pre-ignition Damage

1 - GROUND ELECTRODE STARTING TO DISSOLVE
2 - CENTER ELECTRODE DISSOLVED

SPARK PLUG OVERHEATING

Overheating is indicated by a white or gray center electrode insulator that also appears blistered (Fig. 28). The increase in electrode gap will be considerably in excess of 0.001 inch per 2000 miles of operation. This suggests that a plug with a cooler heat range rating should be used. Over advanced ignition timing, detonation and cooling system malfunctions can also cause spark plug overheating.

CAUTION: If the engine is equipped with copper core ground electrode spark plugs, they must be replaced with the same type/number spark plug as the original. If another spark plug is substituted, pre-ignition will result.

Fig. 28 Spark Plug Overheating

1 - BLISTERED WHITE OR GRAY COLORED INSULATOR

SPARK PLUG (Continued)

REMOVAL

On the 4.0L 6–cylinder engine, the spark plugs are located below the coil rail assembly. On the 4.7L V–8 engine, each individual spark plug is located under each ignition coil.

(1) 4.0L 6–Cylinder Engine: Prior to removing spark plug, spray compressed air around spark plug hole and area around spark plug. This will help prevent foreign material from entering combustion chamber.

(2) 4.7L V–8 Engine: Prior to removing spark plug, spray compressed air around base of ignition coil at cylinder head. This will help prevent foreign material from entering combustion chamber.

(3) On the 4.0L engine the coil rail assembly must be removed to gain access to any/all spark plug. Refer to Ignition Coil Removal/Installation. On the 4.7L V-8 engine each individual ignition coil must be removed to gain access to each spark plug. Refer to Ignition Coil Removal/Installation.

(4) Remove spark plug from cylinder head using a quality socket with a rubber or foam insert. If equipped with a 4.7L V-8 engine, also check condition of coil o-ring and replace as necessary.

(5) Inspect spark plug condition. Refer to Spark Plug Conditions.

CLEANING

The plugs may be cleaned using commercially available spark plug cleaning equipment. After cleaning, file center electrode flat with a small point file or jewelers file before adjusting gap.

CAUTION: Never use a motorized wire wheel brush to clean spark plugs. Metallic deposits will remain on spark plug insulator and will cause plug misfire.

INSTALLATION

CAUTION: The 4.7L V–8 engine is equipped with copper core ground electrode spark plugs. They must be replaced with the same type/number spark plug as the original. If another spark plug is substituted, pre-ignition will result.

Special care should be taken when installing spark plugs into cylinder head spark plug wells. Be sure plugs do not drop into plug wells as ground straps may be bent resulting in a change in plug gap, or electrodes can be damaged.

Always tighten spark plugs to specified torque. Over tightening can cause distortion resulting in a change in spark plug gap or a cracked porcelain insulator.

(1) Start spark plug into cylinder head by hand to avoid cross threading.

(2) 4.0L 6–Cylinder Engine: Tighten spark plugs to 35-41 N·m (26-30 ft. lbs.) torque.

(3) 4.7L V–8 Engine: Tighten spark plugs to 27 N·m (20 ft. lbs.) torque.

(4) 4.7L V–8 Engine: Before installing coil(s), check condition of coil o-ring and replace as necessary. To aid in coil installation, apply silicone to coil o-ring.

(5) Install ignition coil(s). Refer to Ignition Coil Removal/Installation.

INSTRUMENT CLUSTER

TABLE OF CONTENTS

page

INSTRUMENT CLUSTER
DESCRIPTION 2
OPERATION 3
DIAGNOSIS AND TESTING 5
INSTRUMENT CLUSTER 5
REMOVAL 7
DISASSEMBLY. 8
ASSEMBLY 10
INSTALLATION. 12
ABS INDICATOR
DESCRIPTION 12
OPERATION. 12
AIRBAG INDICATOR
DESCRIPTION 13
OPERATION. 13
BRAKE/PARK BRAKE INDICATOR
DESCRIPTION 14
OPERATION. 14
DIAGNOSIS AND TESTING 15
BRAKE INDICATOR 15
CHECK GAUGES INDICATOR
DESCRIPTION 16
OPERATION. 16
CRUISE INDICATOR
DESCRIPTION 17
OPERATION. 17
ENGINE TEMPERATURE GAUGE
DESCRIPTION 17
OPERATION. 18
FRONT FOG LAMPS INDICATOR
DESCRIPTION 18
OPERATION. 19
FUEL GAUGE
DESCRIPTION 19
OPERATION. 19
HIGH BEAM INDICATOR
DESCRIPTION 20
OPERATION. 20
LOW COOLANT INDICATOR
DESCRIPTION 20
OPERATION. 21
LOW FUEL INDICATOR
DESCRIPTION 21
OPERATION. 21
MALFUNCTION INDICATOR LAMP (MIL)
DESCRIPTION 22
OPERATION. 22
ODOMETER
DESCRIPTION 23
OPERATION. 23
OIL PRESSURE GAUGE
DESCRIPTION 24
OPERATION. 24
OVERDRIVE OFF INDICATOR
DESCRIPTION 24
OPERATION. 25
REAR FOG LAMPS INDICATOR
DESCRIPTION 25
OPERATION. 25
SEATBELT INDICATOR
DESCRIPTION 26
OPERATION. 26
SHIFT INDICATOR (TRANSFER CASE)
DESCRIPTION 27
OPERATION. 27
DIAGNOSIS AND TESTING 27
PART TIME INDICATOR 27
SPEEDOMETER
DESCRIPTION 28
OPERATION. 28
TACHOMETER
DESCRIPTION 29
OPERATION. 29
TRANS OVERTEMP INDICATOR
DESCRIPTION 29
OPERATION. 30
TURN SIGNAL INDICATORS
DESCRIPTION 30
OPERATION. 30
DIAGNOSIS AND TESTING 31
TURN SIGNAL INDICATORS 31
VOLTAGE GAUGE
DESCRIPTION 31
OPERATION. 31
WAIT-TO-START INDICATOR
DESCRIPTION 32
OPERATION. 32
WATER-IN-FUEL INDICATOR
DESCRIPTION 33
OPERATION. 33

INSTRUMENT CLUSTER

DESCRIPTION

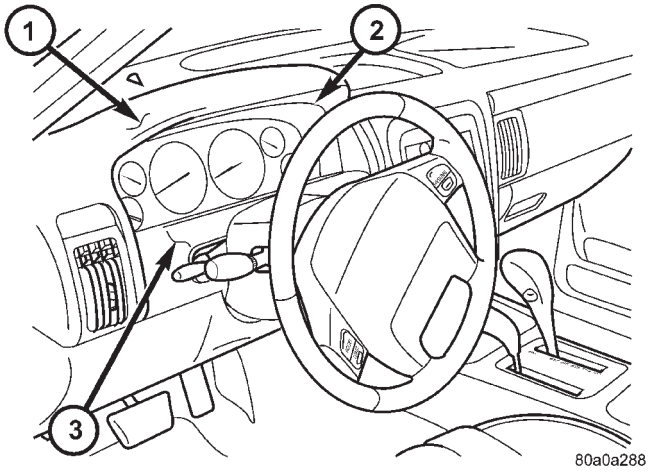

Fig. 1 Instrument Cluster

1 - INSTRUMENT PANEL TOP PAD HOOD FORMATION
2 - INSTRUMENT CLUSTER
3 - CLUSTER BEZEL

The instrument cluster for this model is an ElectroMechanical Instrument Cluster (EMIC) module that is located in the instrument panel above the steering column opening, directly in front of the driver (Fig. 1). The remainder of the EMIC, including the mounts and the electrical connections, are concealed at the back of the cluster housing or behind the cluster bezel. The molded plastic EMIC housing has four integral mounting tabs, two on the lower edge of the housing and two on the upper edge. The EMIC is secured to the molded plastic instrument panel cluster carrier with two screws, and to the underside of the instrument panel top pad hood formation with two screws. All electrical connections to the EMIC are made at the back of the cluster housing through a single take out and connector of the instrument panel wire harness.

The EMIC gauges and indicators are protected by an integral clear plastic cluster lens, and are visible through a dedicated hooded opening in the instrument panel top pad. Just behind the cluster lens is the cluster hood and mask. The cluster hood serves as a visor and shields the face of the cluster from ambient light and reflections to reduce glare. The cluster mask and the dial faces of the gauges are multi-layered units. The mask features two large round openings near its center through which the two major gauges are visible, and two smaller round openings stacked at the outboard side of each of the large openings through which the four minor gauges are visible. The dark, visible surface of the mask and the gauge dial faces are the outer layer or overlay, which is translucent. The darkness of this outer layer prevents the cluster from appearing too cluttered or busy by concealing the cluster indicators that are not illuminated, while the translucence of this layer allows those indicators and icons that are illuminated to be readily visible. The underlying layer of the overlay is opaque and allows light from the various indicator lamps behind it to be visible through the outer layer of the mask and gauge dial faces only through predetermined cutouts. The graphics, increments, and numerals on the gauge faces are also translucent and illuminated from behind, while the orange gauge pointers are illuminated internally. On the lower edge of the cluster lens just right of center, a small molded plastic odometer/trip odometer switch knob protrudes through a dedicated hole in the lens.

Two EMIC modules are offered on this model, one for Laredo models featuring black gauge dial faces, and one for Limited models with gauge dial faces that feature a brushed aluminum appearance. This module utilizes integrated circuitry and information carried on the Programmable Communications Interface (PCI) data bus network for control of all gauges and many of the indicator lamps. (Refer to 8 - ELECTRICAL/ELECTRONIC CONTROL MODULES/ COMMUNICATION - DESCRIPTION). The EMIC also uses several hard wired inputs in order to perform its many functions. The EMIC module incorporates a blue-green electronic digital VFD for displaying odometer and trip odometer information, as well as the cruise-on indicator display function. Some variations of this cluster exist due to optional equipment and regulatory requirements. The EMIC includes the following analog gauges:

- **Coolant Temperature Gauge**
- **Fuel Gauge**
- **Oil Pressure Gauge**
- **Speedometer**
- **Tachometer**
- **Voltage Gauge**

This EMIC also includes provisions for the following indicator lamps:

- **Airbag Indicator**
- **Antilock Brake System (ABS) Indicator**
- **Brake Indicator**
- **Check Gauges Indicator**
- **Cruise Indicator (Odometer VFD)**
- **Front Fog Lamps Indicator**
- **High Beam Indicator**
- **Low Coolant Indicator (Diesel Only)**
- **Low Fuel Indicator**
- **Malfunction Indicator Lamp (MIL)**
- **Overdrive-Off Indicator**
- **Part-Time Indicator (Selec-Trac Four-Wheel Drive Only)**

INSTRUMENT CLUSTER (Continued)

- **Rear Fog Lamps Indicator**
- **Seatbelt Indicator**
- **Sentry Key Immobilizer System (SKIS) Indicator**
- **Transmission Overtemp Indicator**
- **Turn Signal (Right and Left) Indicators**
- **Wait-To-Start Indicator (Diesel Only)**
- **Water-In-Fuel Indicator (Diesel Only)**

Cluster illumination is accomplished by adjustable incandescent back lighting, which illuminates the gauges for visibility when the exterior lighting is turned on. Each of the EMIC indicator lamps is also illuminated by a dedicated incandescent bulb. Each of the incandescent bulbs is secured by an integral bulb holder to the circuit board from the back of the cluster housing.

Hard wired circuitry connects the EMIC to the electrical system of the vehicle. These hard wired circuits are integral to several wire harnesses, which are routed throughout the vehicle and retained by many different methods. These circuits may be connected to each other, to the vehicle electrical system and to the EMIC through the use of a combination of soldered splices, splice block connectors, and many different types of wire harness terminal connectors and insulators. Refer to the appropriate wiring information. The wiring information includes wiring diagrams, proper wire and connector repair procedures, further details on wire harness routing and retention, as well as pin-out and location views for the various wire harness connectors, splices and grounds.

Several component parts of the EMIC for this model are available for service. The cluster lens, the cluster hood and mask unit, the major gauges, the two minor gauge sets, the trip odometer reset knob, the cluster housing which includes the electronic circuit board and rear housing cover, and the incandescent lamp bulbs and bulb holders are available for individual service replacement.

OPERATION

The ElectroMechanical Instrument Cluster (EMIC) is designed to allow the vehicle operator to monitor the conditions of many of the vehicle components and operating systems. The gauges and indicator lamps in the EMIC provide valuable information about the various standard and optional powertrains, fuel and emissions systems, cooling systems, lighting systems, safety systems and many other convenience items. The EMIC is installed in the instrument panel so that all of these monitors can be easily viewed by the vehicle operator when driving, while still allowing relative ease of access for service. The microprocessor-based EMIC hardware and software uses various inputs to control the gauges and indicators visible on the face of the cluster. Some of these inputs are hard wired, but most are in the form of electronic messages that are transmitted by other electronic modules over the Programmable Communications Interface (PCI) data bus network. (Refer to 8 - ELECTRICAL/ELECTRONIC CONTROL MODULES/COMMUNICATION - OPERATION).

The EMIC microprocessor smooths the input data using algorithms to provide gauge readings that are accurate, stable and responsive to operating conditions. These algorithms are designed to provide gauge readings during normal operation that are consistent with customer expectations. However, when abnormal conditions exist, such as low or high battery voltage, low oil pressure or high coolant temperature, the algorithm drives the gauge pointer to an extreme position and the microprocessor turns on the Check Gauges indicator to provide a distinct visual indication of a problem to the vehicle operator. The instrument cluster circuitry also sends chime tone requests over the PCI data bus to the Body Control Module (BCM) when it monitors certain conditions or inputs to provide the vehicle operator with an audible alert.

The EMIC circuitry operates on battery current received through a fuse in the Power Distribution Center (PDC) and a fuse in the Junction Block (JB) on a non-switched fused B(+) circuit, and also on battery current received through a fuse in the JB on a fused ignition switch output (start-run) circuit. This arrangement allows the EMIC to provide some features regardless of the ignition switch position, while other features will operate only with the ignition switch in the Start or On positions. The EMIC circuitry is grounded through two separate ground circuits of the instrument panel wire harness. These ground circuits receive ground through with an eyelet terminal connector of the instrument panel wire harness that is secured by a nut to a ground stud located on the floor panel transmission tunnel beneath the center floor console, just forward of the Airbag Control Module (ACM).

The EMIC also has a self-diagnostic actuator test capability, which will test each of the PCI bus message-controlled functions of the cluster by lighting the appropriate indicator lamps (except for the airbag indicator), sweeping the gauge needles across the gauge faces from their minimum to their maximum readings, and stepping the odometer display sequentially from all zeros through all nines. The self-diagnostic actuator test can be initialized manually or using a DRBIII® scan tool. Refer to the appropriate diagnostic information. See the owner's manual in the vehicle glove box for more information on the features, use and operation of the EMIC.

INSTRUMENT CLUSTER (Continued)

GAUGES

All gauges receive battery current through the EMIC circuitry when the ignition switch is in the On or Start positions. With the ignition switch in the Off position battery current is not supplied to any gauges, and the EMIC circuitry is programmed to move all of the gauge needles back to the low end of their respective scales. Therefore, the gauges do not accurately indicate any vehicle condition unless the ignition switch is in the On or Start positions. All of the EMIC gauges, except the odometer, are air core magnetic units. Two fixed electromagnetic coils are located within each gauge. These coils are wrapped at right angles to each other around a movable permanent magnet. The movable magnet is suspended within the coils on one end of a pivot shaft, while the gauge needle is attached to the other end of the shaft. One of the coils has a fixed current flowing through it to maintain a constant magnetic field strength. Current flow through the second coil changes, which causes changes in its magnetic field strength. The current flowing through the second coil is changed by the EMIC circuitry in response to messages received over the PCI data bus. The gauge needle moves as the movable permanent magnet aligns itself to the changing magnetic fields created around it by the electromagnets.

The gauges are diagnosed using the EMIC self-diagnostic actuator test. (Refer to 8 - ELECTRICAL/INSTRUMENT CLUSTER - DIAGNOSIS AND TESTING). Proper testing of the PCI data bus, and the data bus message inputs to the EMIC that control each gauge requires the use of a DRBIII® scan tool. Refer to the appropriate diagnostic information. Specific operation details for each gauge may be found elsewhere in this service manual.

VACUUM-FLUORESCENT DISPLAY

The Vacuum-Fluorescent Display (VFD) module is soldered to the EMIC circuit board. The display is active with the ignition switch in the On or Start positions, and inactive when the ignition switch is in any other position. The VFD has several display capabilities including odometer, trip odometer, and the message “CRUISE,” whenever the speed control system is turned On. An odometer/trip odometer switch on the EMIC circuit board is used to control the VFD display modes. This switch is actuated manually by depressing the odometer/trip odometer switch knob that extends through the lower edge of the cluster lens, just to the right of center. Actuating this switch momentarily with the ignition switch in the On position will toggle the VFD between the odometer and trip odometer modes. The EMIC microprocessor remembers which display mode is active when the ignition switch is turned to the Off position, and returns the display to that mode when the ignition is turned On again. Depressing the switch button for about two seconds while the VFD is in the trip odometer mode will reset the trip odometer value to zero. Holding this switch depressed while turning the ignition switch from the Off position to the On position will activate the EMIC self-diagnostic actuator test.

The VFD is diagnosed using the EMIC self-diagnostic actuator test. (Refer to 8 - ELECTRICAL/INSTRUMENT CLUSTER - DIAGNOSIS AND TESTING). Proper testing of the PCI data bus and the data bus message inputs to the EMIC that control the VFD functions requires the use of a DRBIII® scan tool. Refer to the appropriate diagnostic information. Specific operation details for the odometer and trip odometer functions of the VFD may be found elsewhere in this service manual.

INDICATOR LAMPS

Indicator lamps are located in various positions within the EMIC and are all connected to the EMIC circuit board. The part-time four-wheel drive indicator lamp and turn signal indicator lamps are hard wired. The seat belt reminder lamp is controlled by the EMIC programming and by PCI data bus messages from the Body Control Module (BCM). The brake indicator lamp is controlled by a hard wired input from the park brake switch and by PCI data bus messages from the Controller Anti-lock Brake (CAB). The Malfunction Indicator Lamp (MIL) is controlled by the EMIC programming and by PCI data bus messages from the Powertrain Control Module (PCM). The EMIC uses PCI data bus messages from the PCM, Airbag Control Module (ACM), the BCM, the CAB, the Sentry Key Immobilizer Module (SKIM), and the Transmission Control Module (TCM) to control all of the remaining indicator lamps. Different indicator lamps are controlled by different strategies; some receive fused ignition switch output from the EMIC circuitry cluster and have a switched ground, while others are grounded through the EMIC circuitry and have a switched battery feed.

If the EMIC loses PCI data bus communications, the EMIC circuitry will automatically turn on the ABS, airbag, brake, and seatbelt indicators after about six seconds, then the MIL and SKIS indicators after about twenty seconds. These indicators will then remain illuminated until PCI data bus communication is restored, or until the ignition switch is turned to the Off position, whichever occurs first. The hard wired indicator lamps are diagnosed using conventional diagnostic methods. The PCI message controlled indicators are diagnosed using the EMIC self-diagnostic actuator test. (Refer to 8 - ELECTRICAL/INSTRUMENT CLUSTER - DIAGNOSIS AND TESTING). Proper testing of the PCI data bus, and

INSTRUMENT CLUSTER (Continued)

the data bus message inputs to the EMIC that control each indicator lamp requires the use of a DRBIII® scan tool. Refer to the appropriate diagnostic information. Specific operation details for each indicator lamp may be found elsewhere in this service manual.

The indicator lamps in the instrument cluster use incandescent bulbs and holders. Each incandescent indicator lamp has a replaceable bulb and bulb holder.

CLUSTER ILLUMINATION

The EMIC has several illumination lamps that are illuminated whenever the exterior lighting is turned On. The illumination intensity of these bulbs and of the vacuum-fluorescent electronic display are controlled by the instrument cluster microprocessor based upon dimming messages received from the Body Control Module (BCM) over the PCI data bus. The BCM uses inputs from the headlamp and panel dimmer switches on the left (lighting) multi-function switch control stalk and internal programming to decide what dimming message is required. The BCM then sends the proper dimming messages to the EMIC over the PCI data bus. The illumination lamps receive battery current through the EMIC electronic circuit board, and are grounded at all times. The BCM also has several hard wired panel lamp driver outputs and sends the proper panel lamps dimming level messages over the PCI data bus to coordinate the illumination intensity of all of the instrument panel lighting and the vacuum fluorescent displays of other electronic modules on the PCI data bus. Vehicles equipped with the Auto Headlamps option have an automatic parade mode. In this mode, the BCM uses an input from the auto headlamp light sensor to determine the ambient light levels. If the BCM decides that the exterior lighting is turned on in the daylight, it overrides the selected panel dimmer switch signal by sending a message over the PCI data bus to illuminate all vacuum fluorescent displays at full brightness for easier visibility in daytime light levels. The automatic parade mode has no effect on the incandescent bulb illumination intensity.

Proper testing of the cluster illumination lamps, the VFD dimming level, the BCM, and the PCI data bus dimming level messages requires the use of a DRBIII® scan tool. Refer to the appropriate diagnostic information. Each of the cluster illumination lamps is located on the instrument cluster circuit board. Each cluster illumination lamp has a replaceable bulb and bulb holder.

CHIME SERVICE

The EMIC is programmed to request chime service from the Body Control Module (BCM) when certain indicator lamps are illuminated. The EMIC chime request for illumination of the low fuel indicator is a customer programmable feature. When the programmed conditions are met, the EMIC generates an electronic chime request message and sends it over the PCI data bus to the BCM. Upon receiving the proper chime request, the BCM activates an integral chime tone generator to provide the audible chime tone to the vehicle operator. (Refer to 8 - ELECTRICAL/CHIME WARNING SYSTEM - OPERATION). Proper testing of the PCI data bus and the data bus chime request message outputs from the EMIC requires the use of a DRBIII® scan tool. Refer to the appropriate diagnostic information.

DIAGNOSIS AND TESTING - INSTRUMENT CLUSTER

Following are tests that will help to diagnose the hard wired circuits of the Electro-Mechanical Instrument Cluster (EMIC). However, these tests may not prove conclusive in the diagnosis of this unit. In order to obtain conclusive testing of the EMIC, the Programmable Communications Interface (PCI) data bus network and all of the electronic modules that provide inputs to, or receive outputs from the EMIC must be checked. All of the gauges and many of the indicator lamps in the instrument cluster are controlled by messages received by the EMIC circuitry on the PCI data bus. Only the part-time four-wheel drive indicator lamp and the turn signal indicator lamps are hard wired in the instrument cluster. The seat belt reminder lamp is controlled by the EMIC programming and by PCI data bus messages from the Body Control Module (BCM). The brake warning lamp is controlled by a hard wired input from the park brake switch and by PCI data bus messages from the Controller Anti-lock Brake (CAB). The Malfunction Indicator Lamp (MIL) is controlled by PCI data bus messages from the Powertrain Control Module (PCM). The EMIC uses PCI data bus messages from the PCM, Airbag Control Module (ACM), the BCM, the CAB, and the Sentry Key Immobilizer Module (SKIM) to control all of the remaining indicator lamps.

If all of the instrument cluster gauges and/or indicator lamps are inoperative, refer to PRELIMINARY DIAGNOSIS . If an individual gauge or PCI data bus message-controlled indicator lamp is inoperative, refer to ACTUATOR TEST. If an individual hard wired indicator lamp is inoperative, refer to the diagnosis and testing information for that specific indicator lamp. Refer to the appropriate wiring information. The wiring information includes wiring diagrams, proper wire and connector repair procedures, details of wire harness routing and retention, connector pin-out information and location views for

INSTRUMENT CLUSTER (Continued)

the various wire harness connectors, splices and grounds.

The most reliable, efficient, and accurate means to diagnose the EMIC requires the use of a DRBIII® scan tool and the appropriate diagnostic information. The DRBIII® scan tool can provide confirmation that the PCI data bus is functional, that all of the electronic modules are sending and receiving the proper messages on the PCI data bus, and that the EMIC is receiving the proper hard wired inputs to perform its many functions.

NOTE: Occasionally, a condition may be encountered where the gauge pointer for the speedometer or the tachometer becomes caught on the wrong side of the pointer stop. To correct this condition, the technician should use a DRBIII® scan tool and the appropriate diagnostic information to perform the instrument cluster self-diagnostic actuator test procedure. When performed, the actuator test procedure will automatically return the pointer to the correct side of the pointer stop.

PRELIMINARY DIAGNOSIS

WARNING: ON VEHICLES EQUIPPED WITH AIRBAGS, DISABLE THE AIRBAG SYSTEM BEFORE ATTEMPTING ANY STEERING WHEEL, STEERING COLUMN, OR INSTRUMENT PANEL COMPONENT DIAGNOSIS OR SERVICE. DISCONNECT AND ISOLATE THE BATTERY NEGATIVE (GROUND) CABLE, THEN WAIT TWO MINUTES FOR THE AIRBAG SYSTEM CAPACITOR TO DISCHARGE BEFORE PERFORMING FURTHER DIAGNOSIS OR SERVICE. THIS IS THE ONLY SURE WAY TO DISABLE THE AIRBAG SYSTEM. FAILURE TO TAKE THE PROPER PRECAUTIONS COULD RESULT IN ACCIDENTAL AIRBAG DEPLOYMENT AND POSSIBLE PERSONAL INJURY.

(1) If some of the indicator lamps operate, but none of the gauges operate, go to Step 2. If all of the gauges and the PCI data bus message-controlled indicator lamps are inoperative, go to Step 4.

(2) Check the fused B(+) fuse (Fuse 17 - 10 ampere) in the Junction Block (JB). If OK, go to Step 3. If not OK, repair the shorted circuit or component as required and replace the faulty fuse.

(3) Check for battery voltage at the fused B(+) fuse (Fuse 17 - 10 ampere) in the JB. If OK, go to Step 4. If not OK, repair the open fused B(+) circuit between the JB and the Power Distribution Center (PDC) as required.

(4) Check the fused ignition switch output (start-run) fuse (Fuse 22 - 10 ampere) in the JB. If OK, go to Step 5. If not OK, repair the shorted circuit or component as required and replace the faulty fuse.

(5) Turn the ignition switch to the On position. Check for battery voltage at the fused ignition switch output (start-run) fuse (Fuse 22 - 10 ampere) in the JB. If OK, go to Step 6. If not OK, repair the open fused ignition switch output (start-run) circuit between the JB and the ignition switch as required.

(6) Turn the ignition switch to the Off position. Disconnect and isolate the battery negative cable. Remove the instrument cluster as described in this group. Reconnect the battery negative cable. Check for battery voltage at the fused B(+) circuit cavity of the instrument panel wire harness connector for the instrument cluster. If OK, go to Step 7. If not OK, repair the open fused B(+) circuit between the instrument cluster and the JB as required.

(7) Turn the ignition switch to the On position. Check for battery voltage at the fused ignition switch output (start-run) circuit cavity of the instrument panel wire harness connector for the instrument cluster. If OK, go to Step 8. If not OK, repair the open fused ignition switch output (start-run) circuit between the instrument cluster and the JB as required.

(8) Turn the ignition switch to the Off position. Disconnect and isolate the battery negative cable. Probe each of the ground circuit cavities of the instrument panel wire harness connector for the instrument cluster. Check for continuity to a good ground. There should be continuity. If OK, refer to the ACTUATOR TEST. If not OK, repair the open ground circuit(s) to ground (G200) as required.

ACTUATOR TEST

WARNING: ON VEHICLES EQUIPPED WITH AIRBAGS, DISABLE THE AIRBAG SYSTEM BEFORE ATTEMPTING ANY STEERING WHEEL, STEERING COLUMN, OR INSTRUMENT PANEL COMPONENT DIAGNOSIS OR SERVICE. DISCONNECT AND ISOLATE THE BATTERY NEGATIVE (GROUND) CABLE, THEN WAIT TWO MINUTES FOR THE AIRBAG SYSTEM CAPACITOR TO DISCHARGE BEFORE PERFORMING FURTHER DIAGNOSIS OR SERVICE. THIS IS THE ONLY SURE WAY TO DISABLE THE AIRBAG SYSTEM. FAILURE TO TAKE THE PROPER PRECAUTIONS COULD RESULT IN ACCIDENTAL AIRBAG DEPLOYMENT AND POSSIBLE PERSONAL INJURY.

The instrument cluster actuator test will put the instrument cluster into its self-diagnostic mode. In this mode the instrument cluster can perform a self-diagnostic test that will confirm that the instrument cluster circuitry, the gauges, and the PCI data bus message controlled indicator lamps are capable of

INSTRUMENT CLUSTER (Continued)

operating as designed. During the actuator test the instrument cluster circuitry will sweep each of the gauge needles across the gauge faces, illuminate each of the segments in the Vacuum-Fluorescent Display (VFD), and turn all of the PCI data bus message-controlled lamps on and off.

Successful completion of the actuator test will confirm that the instrument cluster is operational. However, there may still be a problem with the PCI data bus, the Airbag Control Module (ACM), the Body Control Module (BCM), the Controller Anti-lock Brake (CAB), the Sentry Key Immobilizer Module (SKIM), or the inputs to one of these electronic control modules. Use a DRBIII® scan tool to diagnose these components. Refer to the appropriate diagnostic information.

If an individual gauge does not respond properly, or does not respond at all during the actuator test, the instrument cluster should be removed. However, check that the mounting tabs securing the inoperative gauge or gauge set to the instrument cluster electronic circuit board are properly installed and making good contact with the instrument cluster electronic circuit board before considering gauge replacement. If the gauge mounting tabs check OK, replace the faulty gauge or gauge set.

If an individual indicator lamp does not illuminate during the actuator test, the instrument cluster should be removed. However, check that the incandescent lamp bulb is not faulty and that the bulb holder is properly installed on the instrument cluster electronic circuit board before considering instrument cluster housing and circuit board replacement. If the bulb and bulb holder check OK, replace the faulty instrument cluster housing and circuit board unit.

If any or all segments of the VFD fail to illuminate during the actuator test, the VFD or the instrument cluster electronic circuit board is faulty or damaged. The instrument cluster housing and circuit board unit must be replaced.

(1) Begin the test with the ignition switch in the Off position.

(2) Depress the odometer/trip odometer switch button.

(3) While still holding the odometer/trip odometer switch button depressed, turn the ignition switch to the On position, but do not start the engine.

(4) Release the odometer/trip odometer switch button.

(5) Monitor the operation of the suspect gauge(s) and/or indicator lamp(s).

(6) The instrument cluster will automatically exit the self-diagnostic mode and return to normal operation at the completion of the test, if the ignition switch is turned to the Off position during the test, or if a vehicle speed message indicating that the vehicle is moving is received from the PCM over the PCI data bus during the test.

(7) Go back to Step 1 to repeat the test, if required.

CLUSTER ILLUMINATION DIAGNOSIS

The EMIC has several illumination lamps that are illuminated whenever the exterior lighting is turned On. The illumination intensity of these bulbs and of the vacuum-fluorescent electronic display are controlled by the instrument cluster microprocessor based upon dimming messages received from the Body Control Module (BCM) over the PCI data bus. The BCM uses inputs from the headlamp and panel dimmer switches on the left (lighting) multi-function switch control stalk and internal programming to decide what dimming message is required. The BCM then sends the proper dimming messages to the EMIC over the PCI data bus. The illumination lamps receive battery current through the EMIC electronic circuit board, and are grounded at all times. The left (lighting) multi-function switch and the hard wired inputs it provides to the BCM can be tested using conventional diagnostic tools and methods. (Refer to 8 - ELECTRICAL/LAMPS/LIGHTING - EXTERIOR/HEADLAMP SWITCH - DIAGNOSIS AND TESTING). Proper testing of the cluster illumination lamps, the VFD dimming level, the BCM, and the PCI data bus dimming level messages requires the use of a DRBIII® scan tool. Refer to the appropriate diagnostic information.

REMOVAL

WARNING: ON VEHICLES EQUIPPED WITH AIRBAGS, DISABLE THE AIRBAG SYSTEM BEFORE ATTEMPTING ANY STEERING WHEEL, STEERING COLUMN, OR INSTRUMENT PANEL COMPONENT DIAGNOSIS OR SERVICE. DISCONNECT AND ISOLATE THE BATTERY NEGATIVE (GROUND) CABLE, THEN WAIT TWO MINUTES FOR THE AIRBAG SYSTEM CAPACITOR TO DISCHARGE BEFORE PERFORMING FURTHER DIAGNOSIS OR SERVICE. THIS IS THE ONLY SURE WAY TO DISABLE THE AIRBAG SYSTEM. FAILURE TO TAKE THE PROPER PRECAUTIONS COULD RESULT IN ACCIDENTAL AIRBAG DEPLOYMENT AND POSSIBLE PERSONAL INJURY.

(1) Disconnect and isolate the battery negative cable.

(2) Remove the cluster bezel from the instrument panel. (Refer to 23 - BODY/INSTRUMENT PANEL/CLUSTER BEZEL - REMOVAL).

(3) Remove the two screws that secure the upper mounting tabs of the instrument cluster to the

INSTRUMENT CLUSTER (Continued)

underside of the instrument cluster hood formation of the instrument panel top pad.

(4) Remove the two screws that secure the lower mounting tabs of the instrument cluster to the instrument panel structural duct.

(5) Pull the upper mounting tabs of the instrument cluster downward, then pull the instrument cluster rearward far enough to access the instrument panel wire harness connector for the instrument cluster (Fig. 2).

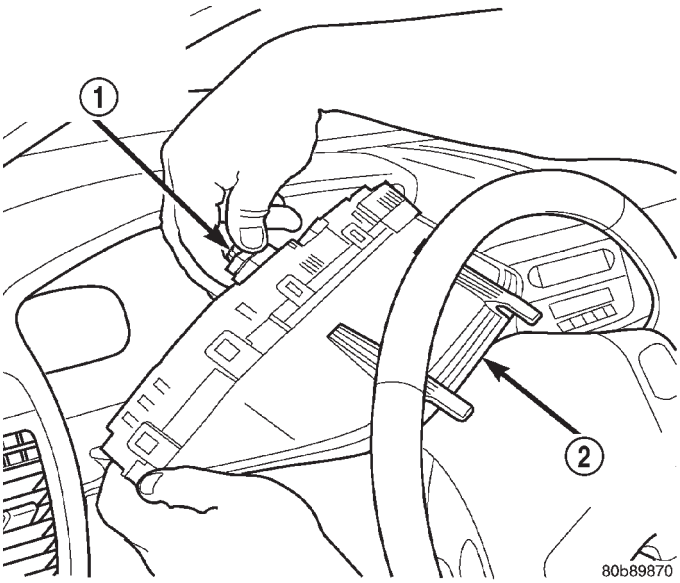

Fig. 2 Instrument Cluster Remove/Install

1 - INSTRUMENT PANEL WIRE HARNESS CONNECTOR
2 - INSTRUMENT CLUSTER

(6) Disconnect the instrument panel wire harness connector for the instrument cluster from the connector receptacle on the back of the instrument cluster housing.

(7) Remove the instrument cluster from the instrument panel.

DISASSEMBLY

Some of the components for the instrument cluster used in this vehicle are serviced individually. The serviced components include: the trip odometer reset knob, the incandescent instrument cluster indicator lamp and illumination lamp bulbs (including the integral bulb holders), the major gauges (the speedometer and the tachometer), the minor gauge sets (the fuel gauge/voltage gauge set and the coolant temperature gauge/oil pressure gauge set), the cluster lens, hood and mask unit, the cluster housing (including the trip odometer reset switch stem and the electronic circuit board), and the cluster housing rear cover. Following are the procedures for disassembling these components from the instrument cluster unit.

WARNING: ON VEHICLES EQUIPPED WITH AIRBAGS, DISABLE THE AIRBAG SYSTEM BEFORE ATTEMPTING ANY STEERING WHEEL, STEERING COLUMN, OR INSTRUMENT PANEL COMPONENT DIAGNOSIS OR SERVICE. DISCONNECT AND ISOLATE THE BATTERY NEGATIVE (GROUND) CABLE, THEN WAIT TWO MINUTES FOR THE AIRBAG SYSTEM CAPACITOR TO DISCHARGE BEFORE PERFORMING FURTHER DIAGNOSIS OR SERVICE. THIS IS THE ONLY SURE WAY TO DISABLE THE AIRBAG SYSTEM. FAILURE TO TAKE THE PROPER PRECAUTIONS COULD RESULT IN ACCIDENTAL AIRBAG DEPLOYMENT AND POSSIBLE PERSONAL INJURY.

TRIP ODOMETER RESET KNOB

(1) Pull the trip odometer reset knob straight back and off of the tip of the trip odometer reset switch stem, which protrudes through the face of the cluster lens to the right of the speedometer (Fig. 4).

CLUSTER BULBS

This procedure applies to each of the cluster illumination lamp or indicator lamp bulb and bulb holder units. However, the illumination lamps and the indicator lamps use different bulb and bulb holder unit sizes. They must never be interchanged. Be certain that any bulb holder removed from the electronic circuit board is reinstalled in the correct position.

(1) Disconnect and isolate the battery negative cable.

(2) Remove the instrument cluster from the instrument panel. (Refer to 8 - ELECTRICAL/INSTRUMENT CLUSTER - REMOVAL).

(3) Turn the bulb holder counterclockwise about sixty degrees on the cluster electronic circuit board (Fig. 3).

(4) Pull the bulb and bulb holder straight back to remove it from the bulb mounting hole in the cluster electronic circuit board.

CLUSTER LENS, HOOD AND MASK

(1) Disconnect and isolate the battery negative cable.

(2) Remove the knob from the trip odometer reset switch stem. Refer to TRIP ODOMETER RESET KNOB .

(3) Remove the instrument cluster from the instrument panel. (Refer to 8 - ELECTRICAL/INSTRUMENT CLUSTER - REMOVAL).

(4) Work around the perimeter of the cluster housing to disengage each of the eight latches that secure the cluster lens, hood and mask unit to the cluster housing (Fig. 4).

INSTRUMENT CLUSTER (Continued)

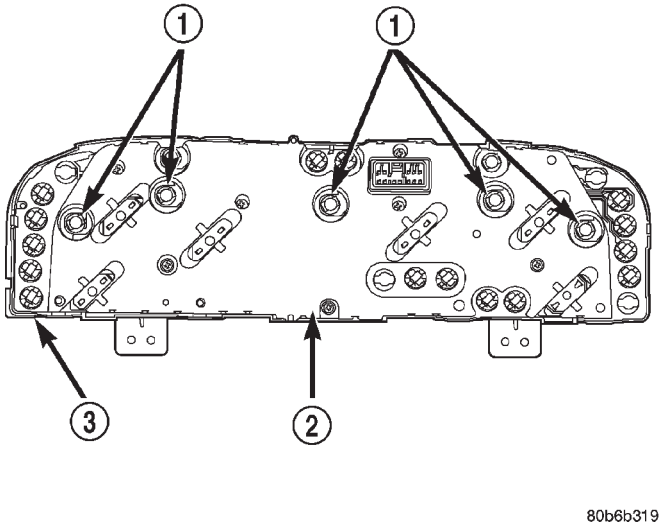

Fig. 3 Cluster Bulb Locations

1 - ILLUMINATION LAMP BULBS AND HOLDERS (5)
2 - CLUSTER HOUSING REAR COVER
3 - CLUSTER HOUSING

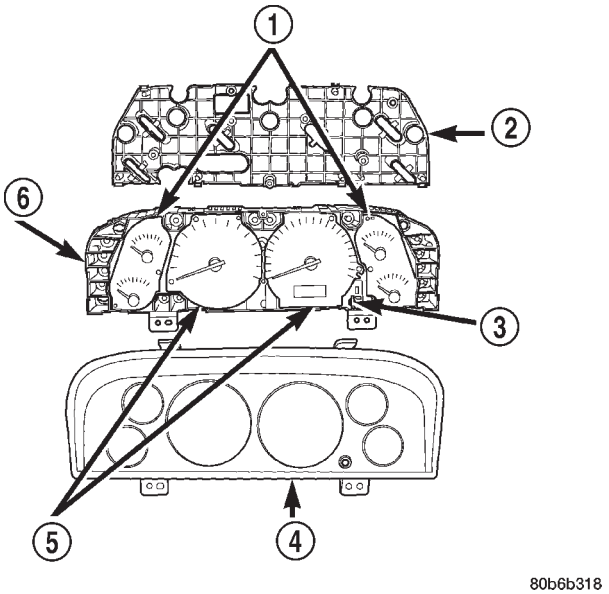

Fig. 4 Instrument Cluster Components

1 - MINOR GAUGE SETS
2 - HOUSING REAR COVER
3 - TRIP ODOMETER RESET KNOB
4 - LENS, HOOD AND MASK
5 - MAJOR GAUGES
6 - CLUSTER HOUSING

(5) Gently pull the cluster lens, hood and mask unit away from the cluster housing.

CLUSTER HOUSING REAR COVER

(1) Disconnect and isolate the battery negative cable.

(2) Remove the instrument cluster from the instrument panel. (Refer to 8 - ELECTRICAL/INSTRUMENT CLUSTER - REMOVAL).

(3) Remove the seven screws that secure the rear cover to the back of the cluster housing (Fig. 5).

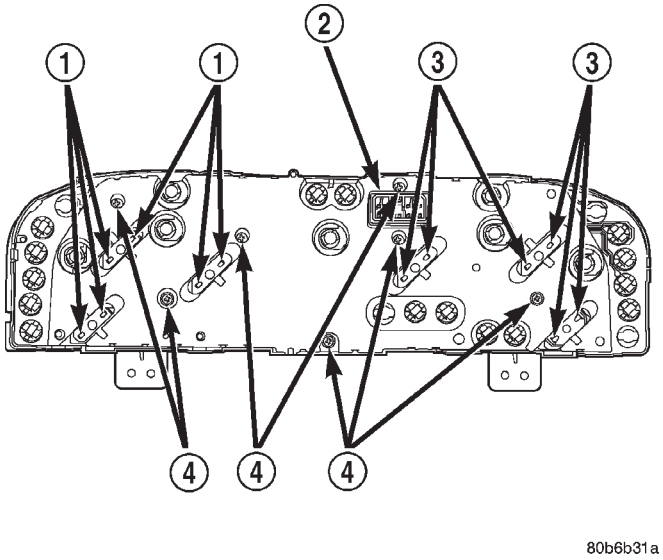

Fig. 5 Cluster Housing Rear Cover Screws

1 - GAUGE MOUNTING TABS
2 - CONNECTOR RECEPTACLE
3 - GAUGE MOUNTING TABS
4 - SCREWS (7)

(4) Disengage the latches (two on top, four on the bottom) that secure the upper and lower edges of the rear cover to the top and bottom of the cluster housing.

(5) Remove the rear cover from the back of the cluster housing.

GAUGES

(1) Disconnect and isolate the battery negative cable.

(2) Remove the knob from the trip odometer reset switch stem. Refer to TRIP ODOMETER RESET KNOB.

(3) Remove the instrument cluster from the instrument panel. (Refer to 8 - ELECTRICAL/INSTRUMENT CLUSTER - REMOVAL).

(4) Remove the cluster lens, hood and mask unit from the cluster housing. Refer to CLUSTER LENS, HOOD AND MASK.

(5) Remove the rear cover from the cluster housing. Refer to CLUSTER HOUSING REAR COVER.

(6) From the rear of the cluster housing, carefully straighten the small metal mounting tabs (two for each major gauge, and four for each minor gauge set) that secure the gauge or gauge set to the cluster electronic circuit board (Fig. 5).

INSTRUMENT CLUSTER (Continued)

(7) From the front of the cluster housing, carefully pull the gauge or gauge set straight out from its mounting cavity in the cluster housing.

CLUSTER HOUSING

(1) Disconnect and isolate the battery negative cable.

(2) Remove the knob from the trip odometer reset switch stem. Refer to TRIP ODOMETER RESET KNOB.

(3) Remove the instrument cluster from the instrument panel. (Refer to 8 - ELECTRICAL/INSTRUMENT CLUSTER - REMOVAL).

(4) Remove all of the cluster illumination lamp and indicator lamp bulb and bulb holder units from the electronic circuit board. Refer to CLUSTER BULBS.

(5) Remove the cluster lens, hood and mask unit from the cluster housing. Refer to CLUSTER LENS, HOOD AND MASK.

(6) Remove the rear cover from the cluster housing. Refer to CLUSTER HOUSING REAR COVER.

(7) Remove the major gauges (2) and minor gauge sets (2) from the cluster housing. Refer to GAUGES.

ASSEMBLY

WARNING: ON VEHICLES EQUIPPED WITH AIRBAGS, DISABLE THE AIRBAG SYSTEM BEFORE ATTEMPTING ANY STEERING WHEEL, STEERING COLUMN, OR INSTRUMENT PANEL COMPONENT DIAGNOSIS OR SERVICE. DISCONNECT AND ISOLATE THE BATTERY NEGATIVE (GROUND) CABLE, THEN WAIT TWO MINUTES FOR THE AIRBAG SYSTEM CAPACITOR TO DISCHARGE BEFORE PERFORMING FURTHER DIAGNOSIS OR SERVICE. THIS IS THE ONLY SURE WAY TO DISABLE THE AIRBAG SYSTEM. FAILURE TO TAKE THE PROPER PRECAUTIONS COULD RESULT IN ACCIDENTAL AIRBAG DEPLOYMENT AND POSSIBLE PERSONAL INJURY.

TRIP ODOMETER RESET KNOB

(1) Push the knob straight onto the tip of the trip odometer reset switch stem, which protrudes through the face of the cluster lens to the right of the speedometer (Fig. 7).

CLUSTER BULBS

This procedure applies to each of the incandescent cluster illumination lamp or indicator lamp bulb and bulb holder units. However, the illumination lamps and the indicator lamps use different bulb and bulb holder unit sizes. They must never be interchanged.

CAUTION: Be certain that any bulb and bulb holder unit removed from the cluster electronic circuit board is reinstalled in the correct position. Always use the correct bulb size and type for replacement. An incorrect bulb size or type may overheat and cause damage to the instrument cluster, the electronic circuit board and/or the gauges.

(1) Insert the bulb and bulb holder straight into the correct bulb mounting hole in the cluster electronic circuit board (Fig. 6).

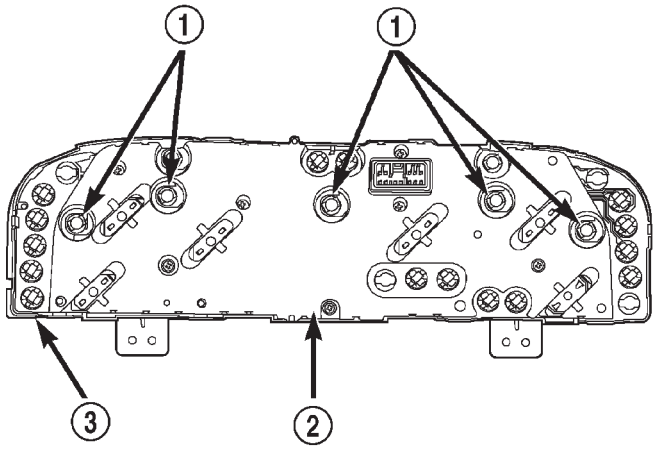

Fig. 6 Cluster Bulb Locations

1 - ILLUMINATION LAMP BULBS AND HOLDERS (5)
2 - CLUSTER HOUSING REAR COVER
3 - CLUSTER HOUSING

(2) With the bulb holder fully seated against the cluster electronic circuit board, turn the bulb holder clockwise about sixty degrees to lock it into place.

(3) Reinstall the instrument cluster into the instrument panel. (Refer to 8 - ELECTRICAL/INSTRUMENT CLUSTER - INSTALLATION).

(4) Reconnect the battery negative cable.

CLUSTER LENS, HOOD AND MASK

(1) Align the cluster lens, hood and mask unit with the cluster housing (Fig. 7).

(2) Press firmly and evenly on the cluster lens, hood and mask unit to install it onto the cluster housing.

(3) Work around the perimeter of the cluster housing to be certain that each of the eight latches that secure the cluster lens, hood and mask unit to the cluster housing is fully engaged.

(4) Reinstall the instrument cluster into the instrument panel. (Refer to 8 - ELECTRICAL/INSTRUMENT CLUSTER - INSTALLATION).

INSTRUMENT CLUSTER (Continued)

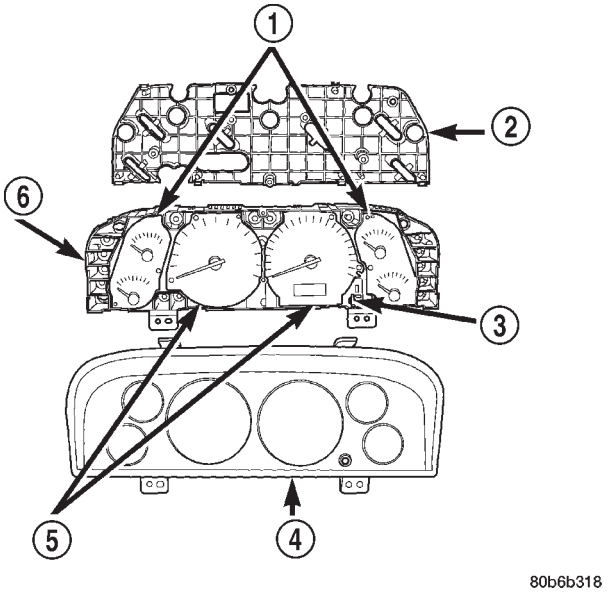

Fig. 7 Instrument Cluster Components

1 - MINOR GAUGE SETS
2 - HOUSING REAR COVER
3 - TRIP ODOMETER RESET KNOB
4 - LENS, HOOD AND MASK
5 - MAJOR GAUGES
6 - CLUSTER HOUSING

(5) Reinstall the knob onto the trip odometer reset switch stem. Refer to TRIP ODOMETER RESET KNOB.

(6) Reconnect the battery negative cable.

CLUSTER HOUSING REAR COVER

(1) Position the rear cover to the back of the cluster housing.

(2) Press firmly and evenly on the rear cover until each of the latches (two on top, four on the bottom) that secure the upper and lower edges of the rear cover to the top and bottom of the cluster housing are fully engaged.

(3) Install and tighten the seven screws that secure the rear cover to the back of the cluster housing (Fig. 8). Tighten the screws to 2.2 N·m (20 in. lbs.).

(4) Reinstall the instrument cluster into the instrument panel. (Refer to 8 - ELECTRICAL/INSTRUMENT CLUSTER - INSTALLATION).

(5) Reconnect the battery negative cable.

GAUGES

(1) From the front of the cluster housing, carefully align the gauge or gauge set with the connector pins in the bottom of its gauge mounting cavity in the cluster housing.

(2) From the front of the cluster housing, press firmly and evenly on the gauge or gauge set to install

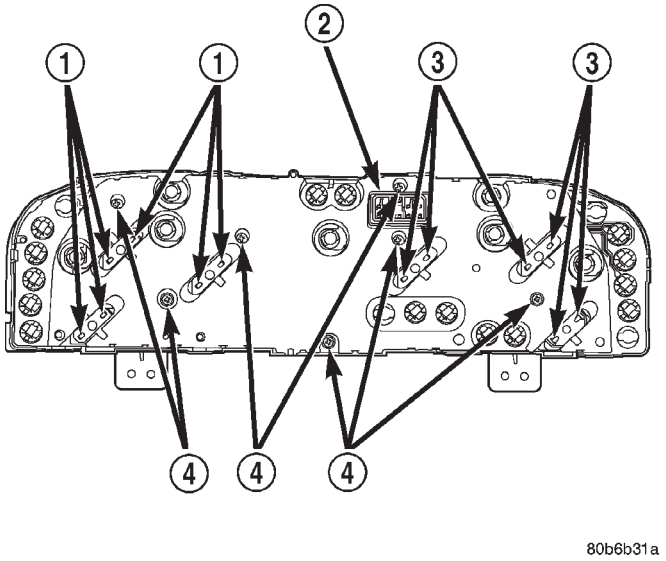

Fig. 8 Cluster Housing Rear Cover Screws

1 - GAUGE MOUNTING TABS
2 - CONNECTOR RECEPTACLE
3 - GAUGE MOUNTING TABS
4 - SCREWS (7)

it onto the connector pins and into its gauge mounting cavity in the cluster housing.

(3) From the rear of the cluster housing, be certain that the small metal mounting tabs (two for each major gauge, and four for each minor gauge set) that secure the gauge or gauge set are protruding through the mounting holes in the cluster electronic circuit board (Fig. 8).

(4) From the rear of the cluster housing, carefully bend over the small metal mounting tabs (two for each major gauge, and four for each minor gauge set) to secure the gauge or gauge set to the cluster electronic circuit board.

(5) Reinstall the rear cover onto the cluster housing. Refer to CLUSTER HOUSING REAR COVER.

(6) Reinstall the cluster lens, hood and mask unit onto the cluster housing. Refer to CLUSTER LENS, HOOD AND MASK.

(7) Reinstall the instrument cluster into the instrument panel. (Refer to 8 - ELECTRICAL/INSTRUMENT CLUSTER - INSTALLATION).

(8) Reinstall the knob onto the trip odometer reset switch stem. Refer to TRIP ODOMETER RESET KNOB.

(9) Reconnect the battery negative cable.

CLUSTER HOUSING

(1) Reinstall all of the cluster gauges and gauge sets into the cluster housing. Refer to GAUGES.

(2) Reinstall the rear cover onto the cluster housing. Refer to CLUSTER HOUSING REAR COVER.

INSTRUMENT CLUSTER (Continued)

(3) Reinstall the cluster lens, hood and mask unit onto the cluster housing. Refer to CLUSTER LENS, HOOD AND MASK.

(4) Reinstall all of the cluster illumination lamp and indicator lamp bulb and bulb holder units into the electronic circuit board. Refer to CLUSTER BULBS.

(5) Reinstall the instrument cluster into the instrument panel. (Refer to 8 - ELECTRICAL/INSTRUMENT CLUSTER - INSTALLATION).

(6) Reinstall the knob onto the trip odometer reset switch stem. Refer to TRIP ODOMETER RESET KNOB.

(7) Reconnect the battery negative cable.

INSTALLATION

WARNING: ON VEHICLES EQUIPPED WITH AIRBAGS, DISABLE THE AIRBAG SYSTEM BEFORE ATTEMPTING ANY STEERING WHEEL, STEERING COLUMN, OR INSTRUMENT PANEL COMPONENT DIAGNOSIS OR SERVICE. DISCONNECT AND ISOLATE THE BATTERY NEGATIVE (GROUND) CABLE, THEN WAIT TWO MINUTES FOR THE AIRBAG SYSTEM CAPACITOR TO DISCHARGE BEFORE PERFORMING FURTHER DIAGNOSIS OR SERVICE. THIS IS THE ONLY SURE WAY TO DISABLE THE AIRBAG SYSTEM. FAILURE TO TAKE THE PROPER PRECAUTIONS COULD RESULT IN ACCIDENTAL AIRBAG DEPLOYMENT AND POSSIBLE PERSONAL INJURY.

(1) Position the instrument cluster to the instrument panel.

(2) Reconnect the instrument panel wire harness connector for the instrument cluster to the connector receptacle on the back of the instrument cluster housing (Fig. 9).

(3) Position the lower mounting tabs of the instrument cluster to the mounting holes on the instrument panel structural duct, then tilt the top of the instrument cluster forward until the upper mounting tabs are positioned to the mounting holes on the underside of the instrument cluster hood formation of the instrument panel top pad.

(4) Install and tighten the two screws that secure the upper mounting tabs of the instrument cluster to the underside of the instrument cluster hood formation of the instrument panel top pad. Tighten the screws to 2.2 N·m (20 in. lbs.).

(5) Install and tighten the two screws that secure the lower mounting tabs of the instrument cluster to the instrument panel structural duct. Tighten the screws to 2.2 N·m (20 in. lbs.).

(6) Reinstall the cluster bezel onto the instrument panel. (Refer to 23 - BODY/INSTRUMENT PANEL/CLUSTER BEZEL - INSTALLATION).

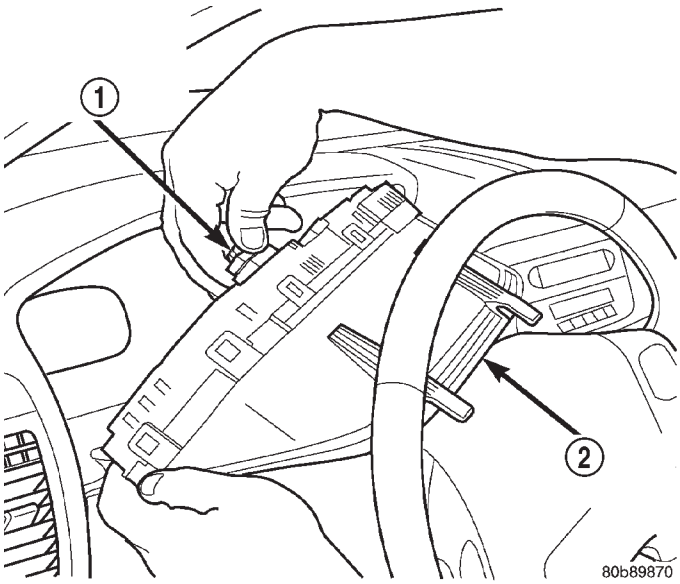

Fig. 9 Instrument Cluster Remove/Install

1 - INSTRUMENT PANEL WIRE HARNESS CONNECTOR
2 - INSTRUMENT CLUSTER

(7) Reconnect the battery negative cable.

ABS INDICATOR

DESCRIPTION

An Antilock Brake System (ABS) indicator lamp is standard equipment on all instrument clusters. The ABS indicator lamp is located near the lower edge of the instrument cluster overlay, between the fuel gauge and the tachometer. The ABS indicator lamp consists of a International Control and Display Symbol icon for “Failure of Anti-lock Braking System” imprinted on an amber lens. The lens is located behind a cutout in the opaque layer of the instrument cluster overlay. The dark outer layer of the overlay prevents the icon from being clearly visible when the lamp is not illuminated. The icon appears silhouetted against an amber field through the translucent outer layer of the overlay when the indicator is illuminated from behind by a replaceable incandescent bulb and bulb holder unit located on the instrument cluster electronic circuit board. The ABS indicator lens is serviced as a unit with the instrument cluster lens, hood and mask unit.

OPERATION

The ABS indicator lamp gives an indication to the vehicle operator when the ABS system is faulty or inoperative. This lamp is controlled by a transistor on the instrument cluster circuit board based upon electronic messages received by the cluster from the Controller Antilock Brake (CAB) over the Program-

ABS INDICATOR (Continued)

mable Communications Interface (PCI) data bus. The ABS indicator lamp bulb receives battery current on the instrument cluster electronic circuit board through the fused ignition switch output (st-run) circuit whenever the ignition switch is in the On or Start positions; therefore, the lamp will always be off when the ignition switch is in any position except On or Start. The lamp bulb only illuminates when it is provided a path to ground by the instrument cluster transistor. The instrument cluster will turn on the ABS indicator lamp for the following reasons:

- **Bulb Test** - Each time the ignition switch is turned to the On position the lamp is illuminated by the cluster based upon a message from the CAB for about four seconds as a bulb test.
- **ABS Lamp-On Message** - Each time the cluster receives a lamp-on message from the CAB, the lamp will be illuminated. The lamp remains illuminated until the cluster receives a lamp-off message from the CAB, or until the ignition switch is turned to the Off position, whichever occurs first.
- **Communication Error** - If the cluster receives no lamp-on or lamp-off messages from the CAB for six consecutive seconds, the lamp is illuminated. The lamp remains illuminated until the cluster receives a lamp-off message from the CAB, or until the ignition switch is turned to the Off position, whichever occurs first.
- **Actuator Test** - Each time the cluster is put through the actuator test, the lamp will be turned on for the duration of the test to confirm the functionality of the lamp and the cluster circuitry.

The CAB continually monitors the ABS circuits and sensors to decide whether the system is in good operating condition. The CAB then sends the proper lamp-on or lamp-off messages to the instrument cluster. If the ABS indicator lamp fails to light during the bulb test, replace the bulb with a known good unit. For further diagnosis of the ABS indicator lamp or the instrument cluster circuitry that controls the lamp, (Refer to 8 - ELECTRICAL/INSTRUMENT CLUSTER - DIAGNOSIS AND TESTING). If the CAB sends a lamp-on message after the bulb test, it indicates that the CAB has detected a system malfunction and/or that the ABS system has become inoperative. The CAB will store a Diagnostic Trouble Code (DTC) for any malfunction it detects. (Refer to 5 - BRAKES - DIAGNOSIS AND TESTING). For proper diagnosis of the antilock brake system, the CAB, the PCI data bus, or the message inputs to the instrument cluster that control the ABS indicator lamp, a DRBIII® scan tool and the appropriate diagnostic information are required.

AIRBAG INDICATOR

DESCRIPTION

An airbag indicator lamp is standard equipment on all instrument clusters, but is electronically disabled on vehicles not equipped with airbags. The airbag indicator lamp is located near the upper edge of the instrument cluster overlay, between the speedometer and the tachometer. The airbag indicator lamp consists of the word “AIRBAG” imprinted on a red lens located behind a cutout in the opaque layer of the instrument cluster overlay. The dark outer layer of the overlay prevents the indicator from being clearly visible when the lamp is not illuminated. The word “AIRBAG” appears silhouetted against a red field through the translucent outer layer of the overlay when the indicator is illuminated from behind by a replaceable incandescent bulb and bulb holder unit located on the instrument cluster electronic circuit board. The airbag indicator lens is serviced as a unit with the instrument cluster lens, hood and mask unit.

OPERATION

The airbag indicator lamp gives an indication to the vehicle operator when the airbag system is faulty or inoperative. This lamp is controlled by a transistor on the instrument cluster circuit board based upon the cluster programming and electronic messages received by the cluster from the Airbag Control Module (ACM) over the Programmable Communications Interface (PCI) data bus. The airbag indicator lamp bulb receives battery current on the instrument cluster electronic circuit board through the fused ignition switch output (st-run) circuit whenever the ignition switch is in the On or Start positions; therefore, the lamp will always be off when the ignition switch is in any position except On or Start. The lamp bulb only illuminates when it is switched to ground by the instrument cluster transistor. The instrument cluster will turn on the airbag indicator lamp for the following reasons:

- **Bulb Test** - Each time the ignition switch is turned to the On position the lamp is illuminated by the ACM for about six seconds as a bulb test. The lamp will also illuminate for about six seconds during the instrument cluster actuator test, but this is a function of the ACM bulb test and not related to the instrument cluster actuator test function.
- **ACM Lamp-On Message** - Each time the cluster receives a lamp-on message from the ACM, the lamp will be illuminated. The lamp remains illuminated for about twelve seconds, until the cluster receives a lamp-off message from the ACM, whichever is longer; or, until the ignition switch is turned to the Off position.

AIRBAG INDICATOR (Continued)

• **Communication Error** - If the cluster receives no airbag messages for six consecutive seconds, the lamp is illuminated. The lamp remains illuminated for about twelve seconds or until the cluster receives a single lamp-off message from the ACM, whichever is longer; or, until the ignition switch is turned to the Off position.

The ACM continually monitors the airbag system circuits and sensors to decide whether the system is in good operating condition. The ACM then sends the proper lamp-on or lamp-off messages to the instrument cluster. If the airbag indicator lamp fails to light during the bulb test, replace the bulb with a known good unit. For further diagnosis of the airbag indicator lamp or the instrument cluster circuitry that controls the lamp, (Refer to 8 - ELECTRICAL/ INSTRUMENT CLUSTER - DIAGNOSIS AND TESTING). If the instrument cluster turns on the airbag indicator lamp after the bulb test, it may indicate that a malfunction has occurred and that the airbags may not deploy when required or may deploy when not required. In addition, if the airbag indicator lamp or the transistor that energizes the lamp are inoperative, the instrument cluster will send an electronic fault message to the ACM, and the ACM will store a Diagnostic Trouble Code (DTC) for this or any other malfunction it detects. If the instrument cluster detects an open circuit in the airbag indicator lamp driver circuit or the airbag indicator lamp, it will also store a DTC for “airbag lamp driver open” or “airbag lamp open” in its memory, which can be retrieved using a DRBIII® scan tool. For proper diagnosis of the airbag system, the ACM, the PCI data bus, or the message inputs to the instrument cluster that control the airbag indicator lamp, a DRBIII® scan tool and the appropriate diagnostic information are required.

BRAKE/PARK BRAKE INDICATOR

DESCRIPTION

A brake indicator lamp is standard equipment on all instrument clusters. The brake indicator lamp is located near the left edge of the instrument cluster overlay, to the left of the fuel gauge and the voltage gauge. There are two versions of the brake indicator lamp, depending upon the market for which the vehicle is manufactured. The domestic market version of the brake indicator lamp consists of the word “BRAKE” imprinted on a red lens. The international market version has two International Control and Display Symbol icons imprinted on the red lens, one is the icon for “Brake Failure” and the other is the icon for “Parking Brake”. In either case, the lens is located behind a cutout in the opaque layer of the instrument cluster overlay. The dark outer layer of the overlay prevents the word or the icons from being clearly visible when the lamp is not illuminated. The word “BRAKE” or the two icons appear silhouetted against a red field through the translucent outer layer of the overlay when the indicator is illuminated from behind by a replaceable incandescent bulb and bulb holder unit located on the instrument cluster electronic circuit board. The brake indicator lens is serviced as a unit with the instrument cluster lens, hood and mask unit.

OPERATION

The brake indicator lamp gives an indication to the vehicle operator when the parking brake is applied, when the fluid level of the brake hydraulic system is low, or if there are certain malfunctions of the Antilock Brake System (ABS). This lamp is controlled by a transistor on the instrument cluster electronic circuit board based upon a hard wired input from the park brake switch, or electronic messages received by the cluster from the Controller Antilock Brake (CAB) over the Programmable Communications Interface (PCI) data bus. The brake indicator lamp bulb receives battery current on the instrument cluster electronic circuit board through the fused ignition switch output (st-run) circuit whenever the ignition switch is in the On or Start positions; therefore, the lamp will always be off when the ignition switch is in any position except On or Start. The lamp bulb only illuminates when it is provided a path to ground by the instrument cluster transistor. The brake indicator lamp will be illuminated for the following reasons:

• **Bulb Test** - Each time the ignition switch is turned to the Start position the lamp is illuminated by the cluster based upon a message from the CAB for about four seconds as a bulb test.

• **Park Brake-On** - If the park brake is applied with the ignition switch in the On position, the lamp is illuminated. The lamp remains illuminated until the park brake is released, or until the ignition switch is turned to the Off position, whichever occurs first.

• **Brake Hydraulic System Fluid Low** - If the fluid level in the reservoir of the brake master cylinder becomes low, the lamp is illuminated by the cluster based upon a message from the CAB. The lamp remains illuminated until the proper minimum brake fluid level is restored, or until the ignition switch is turned to the Off position, whichever occurs first.

• **ABS Lamp Fault Message** - If the cluster receives an ABS lamp-on message from the CAB, but the ABS indicator is inoperative, the brake indicator lamp will be illuminated. The lamp remains illumi-

BRAKE/PARK BRAKE INDICATOR (Continued)

nated until the cluster receives an ABS lamp-off message from the CAB, or until the ignition switch is turned to the Off position, whichever occurs first.

- **Communication Error** - If the cluster receives no lamp-on or lamp-off messages from the CAB for six consecutive seconds, the lamp is illuminated. The lamp remains illuminated until the cluster receives a lamp-off message from the CAB, or until the ignition switch is turned to the Off position, whichever occurs first.
- **Actuator Test** - Each time the cluster is put through the actuator test, the lamp will be turned on for the duration of the test to confirm the functionality of the lamp and the cluster circuitry.

The hard wired inputs that affect the brake indicator lamp operation include:

- **Park Brake Switch** - The park brake switch on the park brake lever mechanism provides a ground path to the red brake warning indicator driver circuit input to the instrument cluster whenever the park brake is applied.
- **Brake Warning Indicator Switch** - The brake warning indicator switch (also known as the brake fluid level sensor) on the brake master cylinder reservoir provides a brake fluid level sense input to the circuitry of the CAB.

The brake warning indicator switch (also known as the brake fluid level sensor) is connected between the brake warning indicator driver circuit and a ground return circuit so that the CAB can monitor the fluid level in the brake master cylinder reservoir. The brake warning indicator switch also includes an internal resistor connected in parallel between the switch contacts, which allows the CAB to self-diagnose this circuit. If the brake indicator lamp remains illuminated with the parking brake released after the bulb test, or comes on while driving, it indicates that the CAB has detected a brake system malfunction, that the brake fluid level has become low, and/or that the brake system may be inoperative. The CAB will store a Diagnostic Trouble Code (DTC) for any malfunction it detects. (Refer to 5 - BRAKES - DIAGNOSIS AND TESTING). For proper diagnosis of the antilock brake system, the CAB, the brake warning indicator switch, the PCI data bus, or the message inputs to the instrument cluster that control the brake indicator lamp, a DRBIII® scan tool and the appropriate diagnostic information are required.

The park brake switch is connected in series between ground and the red brake warning indicator input to the instrument cluster. The park brake switch input to the instrument cluster can be diagnosed using conventional diagnostic tools and methods. (Refer to 8 - ELECTRICAL/INSTRUMENT CLUSTER/BRAKE/PARK BRAKE INDICATOR - DIAGNOSIS AND TESTING - BRAKE INDICATOR). If the brake indicator lamp fails to light during the bulb test, replace the bulb with a known good unit. For further diagnosis of the brake indicator lamp or the instrument cluster circuitry that controls the lamp, (Refer to 8 - ELECTRICAL/INSTRUMENT CLUSTER - DIAGNOSIS AND TESTING).

DIAGNOSIS AND TESTING - BRAKE INDICATOR

The diagnosis found here addresses an inoperative park brake indicator lamp condition. If the brake indicator lamp fails to light during the bulb test, replace the bulb with a known good unit. For further diagnosis of the brake indicator lamp or the instrument cluster circuitry that controls the lamp, or if there are problems with several indicator lamps in the instrument cluster, (Refer to 8 - ELECTRICAL/INSTRUMENT CLUSTER - DIAGNOSIS AND TESTING). If the brake indicator lamp stays on with the ignition switch in the On position and the parking brake released, or comes on while driving, (Refer to 5 - BRAKES - DIAGNOSIS AND TESTING). If no brake system problem is found, the following procedures will help to locate a shorted or open circuit, or a faulty park brake switch input. Refer to the appropriate wiring information. The wiring information includes wiring diagrams, proper wire and connector repair procedures, details of wire harness routing and retention, connector pin-out information and location views for the various wire harness connectors, splices and grounds.

WARNING: ON VEHICLES EQUIPPED WITH AIRBAGS, DISABLE THE AIRBAG SYSTEM BEFORE ATTEMPTING ANY STEERING WHEEL, STEERING COLUMN, OR INSTRUMENT PANEL COMPONENT DIAGNOSIS OR SERVICE. DISCONNECT AND ISOLATE THE BATTERY NEGATIVE (GROUND) CABLE, THEN WAIT TWO MINUTES FOR THE AIRBAG SYSTEM CAPACITOR TO DISCHARGE BEFORE PERFORMING FURTHER DIAGNOSIS OR SERVICE. THIS IS THE ONLY SURE WAY TO DISABLE THE AIRBAG SYSTEM. FAILURE TO TAKE THE PROPER PRECAUTIONS COULD RESULT IN ACCIDENTAL AIRBAG DEPLOYMENT AND POSSIBLE PERSONAL INJURY.

(1) Turn the ignition switch to the Off position. Disconnect and isolate the battery negative cable. Disconnect the instrument panel wire harness connector for the park brake switch from the park brake switch terminal. Apply the parking brake. Check for continuity between the park brake switch terminal and a good ground. There should be continuity. If OK, go to Step 2. If not OK, replace the faulty park brake switch.

(2) Remove the instrument cluster and disconnect the instrument panel wire harness connector for the

BRAKE/PARK BRAKE INDICATOR (Continued)

instrument cluster from the cluster connector receptacle. Check for continuity between the red brake warning indicator driver circuit cavity of the instrument panel wire harness connector for the instrument cluster and a good ground. There should be no continuity. If OK, go to Step 3. If not OK, repair the shorted red brake warning indicator driver circuit between the park brake switch and the instrument cluster as required.

(3) Check for continuity between the red brake warning indicator driver circuit cavities of the instrument panel wire harness connectors for the instrument cluster and the park brake switch. There should be continuity. If not OK, repair the open red brake warning indicator driver circuit between the park brake switch and the instrument cluster as required.

CHECK GAUGES INDICATOR

DESCRIPTION

A check gauges indicator lamp is standard equipment on all instrument clusters. The check gauges indicator lamp is located on the right edge of the instrument cluster overlay, between the oil pressure gauge and the coolant temperature gauge. The check gauges indicator lamp consists of a the words “CHECK GAGES” imprinted on a red lens located behind a cutout in the opaque layer of the instrument cluster overlay. The dark outer layer of the overlay prevents the indicator from being clearly visible when the lamp is not illuminated. The words “CHECK GAGES” appear silhouetted against a red field through the translucent outer layer of the overlay when the indicator is illuminated from behind by a replaceable incandescent bulb and bulb holder unit located on the instrument cluster electronic circuit board. The check gauges indicator lens is serviced as a unit with the instrument cluster lens, hood and mask unit.

OPERATION

The check gauges indicator lamp gives an indication to the vehicle operator when certain instrument cluster gauge readings reflect a condition requiring immediate attention. This lamp is controlled by a transistor on the instrument cluster circuit board based upon the cluster programming and electronic messages received by the cluster from the Powertrain Control Module (PCM) over the Programmable Communications Interface (PCI) data bus. The check gauges indicator lamp bulb receives battery current on the instrument cluster electronic circuit board through the fused ignition switch output (st-run) circuit whenever the ignition switch is in the On or Start positions; therefore, the lamp will always be off when the ignition switch is in any position except On or Start. The lamp bulb only illuminates when it is provided a path to ground by the instrument cluster transistor. The instrument cluster will turn on the check gauges indicator lamp for the following reasons:

- **Bulb Test** - Each time the ignition switch is turned to the On position the lamp is illuminated for about three seconds.
- **Engine Temperature High Message** - Each time the cluster receives a message from the PCM indicating the engine coolant temperature is about 124° C or higher (about 255° F or higher), the lamp will be illuminated. The lamp remains illuminated until the cluster receives a message from the PCM indicating that the engine temperature is about 122° C or lower (about 252° F or lower), or until the ignition switch is turned to the Off position, whichever occurs first.
- **Engine Oil Pressure Low Message** - Each time the cluster receives a message from the PCM indicating the engine oil pressure is about 0.003 kg/cm^2 or lower (about 6 psi or lower), the lamp will be illuminated. The lamp remains illuminated until the cluster receives a message from the PCM indicating that the engine oil pressure is about 0.004 kg/cm^2 or higher (about 8 psi or higher), or until the ignition switch is turned to the Off position, whichever occurs first. The cluster will only turn the lamp on in response to an engine oil pressure low message if the engine speed is 300 rpm or greater.
- **Charge Fail Message** - Each time the cluster receives a message from the PCM indicating a charge fail condition (system voltage is nine volts or lower), the lamp will be illuminated. The lamp remains illuminated until the cluster receives a message from the PCM indicating there is no charge fail condition (system voltage is twelve volts or higher, but lower than nineteen volts) or until the ignition switch is turned to the Off position, whichever occurs first.
- **Voltage High Message** - Each time the cluster receives a message from the PCM indicating a voltage high condition (system voltage is nineteen volts or higher), the lamp will be illuminated. The lamp remains illuminated until the cluster receives a message from the PCM indicating there is no voltage high condition (system voltage is sixteen volts or lower, but higher than nine volts) or until the ignition switch is turned to the Off position, whichever occurs first.
- **Actuator Test** - Each time the cluster is put through the actuator test, the lamp will be turned on for the duration of the test to confirm the functionality of the lamp and the cluster circuitry.

CHECK GAUGES INDICATOR (Continued)

The PCM continually monitors the engine and charging system, then sends the proper messages to the instrument cluster. If the check gauges indicator fails to light during the bulb test, replace the bulb with a known good unit. For further diagnosis of the check gauges indicator lamp or the instrument cluster circuitry that controls the lamp, (Refer to 8 - ELECTRICAL/INSTRUMENT CLUSTER - DIAGNOSIS AND TESTING). For proper diagnosis of the PCM, the PCI data bus, or the message inputs to the instrument cluster that control the check gauges indicator, a DRBIII® scan tool and the appropriate diagnostic information are required.

CRUISE INDICATOR

DESCRIPTION

A cruise indicator lamp is standard equipment on all instrument clusters, but is only functional on vehicles equipped with the optional speed control system. The cruise indicator lamp consists of the word “CRUISE”, which appears in the lower portion of the odometer/trip odometer Vacuum-Fluorescent Display (VFD). The VFD is part of the cluster electronic circuit board, and is visible through a cutout located in the lower center of the speedometer dial face. The dark lens of the VFD prevents the indicator from being clearly visible when it is not illuminated. The word “CRUISE” appears in the same blue/green color and at the same lighting level as the odometer/trip odometer information when it is illuminated by the instrument cluster electronic circuit board. The cruise indicator lamp is serviced as a unit with the VFD in the instrument cluster housing and electronic circuit board unit.

OPERATION

The cruise indicator gives an indication to the vehicle operator when the speed control system is turned On, regardless of whether the speed control is engaged. This indicator is controlled by the instrument cluster circuit board based upon the cluster programming and electronic messages received by the cluster from the Powertrain Control Module (PCM) over the Programmable Communications Interface (PCI) data bus. The cruise indicator receives battery current on the instrument cluster electronic circuit board through the fused ignition switch output (st-run) circuit whenever the ignition switch is in the On or Start positions; therefore, the indicator will always be off when the ignition switch is in any position except On or Start. The lamp only illuminates when it is switched to ground by the instrument cluster circuitry. The instrument cluster will turn on the cruise indicator for the following reasons:

- **Cruise Lamp-On Message** - Each time the cluster receives a cruise lamp-on message from the PCM indicating the speed control system has been turned On. The indicator remains illuminated until the cluster receives a cruise lamp-off message from the PCM or until the ignition switch is turned to the Off position, whichever occurs first.
- **Actuator Test** - Each time the cluster is put through the actuator test, the indicator will be turned on and off through the duration of the test to confirm the functionality of the indicator and the cluster circuitry.

The PCM continually monitors the speed control switches to determine the proper outputs to the speed control servo. The PCM then sends the proper cruise indicator messages to the instrument cluster. For diagnosis of the cruise indicator or the instrument cluster circuitry that controls the indicator, (Refer to 8 - ELECTRICAL/INSTRUMENT CLUSTER - DIAGNOSIS AND TESTING). For proper diagnosis of the speed control system, the PCM, the PCI data bus, or the message inputs to the instrument cluster that control the cruise indicator, a DRBIII® scan tool and the appropriate diagnostic information are required.

ENGINE TEMPERATURE GAUGE

DESCRIPTION

An engine coolant temperature gauge is standard equipment on all instrument clusters. The engine coolant temperature gauge is located in the lower right quadrant of the instrument cluster, below the oil pressure gauge. The engine coolant temperature gauge consists of a movable gauge needle or pointer controlled by the instrument cluster circuitry and a fixed 90 degree scale on the gauge dial face that reads left-to-right from 40° C to 125° C, or from 100° F to 260° F, depending upon the market for which the vehicle is manufactured. An International Control and Display Symbol icon for “Engine Coolant Temperature” is located in the center of the gauge dial face, directly below the 100° C or 210° F graduation of the gauge scale. The engine coolant temperature gauge graphics are either white and red against a black gauge dial face (Laredo), or blue-green and red against a brushed aluminum gauge dial face (Limited), making them clearly visible within the instrument cluster in daylight. When illuminated from behind by the panel lamps dimmer controlled cluster illumination lighting with the exterior lamps turned On, the white graphics (Laredo)

ENGINE TEMPERATURE GAUGE (Continued)

appear blue-green, the blue-green graphics (Limited) still appear blue-green, while the red graphics for both models still appear red. The orange gauge needle is internally illuminated. Gauge illumination is provided by replaceable incandescent bulb and bulb holder units located on the instrument cluster electronic circuit board. The engine coolant temperature gauge is serviced as a minor gauge set with the oil pressure gauge.

OPERATION

The engine coolant temperature gauge gives an indication to the vehicle operator of the engine coolant temperature. This gauge is controlled by the instrument cluster circuit board based upon the cluster programming and electronic messages received by the cluster from the Powertrain Control Module (PCM) over the Programmable Communications Interface (PCI) data bus. The engine coolant temperature gauge is an air core magnetic unit that receives battery current on the instrument cluster electronic circuit board through the fused ignition switch output (st-run) circuit whenever the ignition switch is in the On or Start positions. The cluster is programmed to move the gauge needle back to the low end of the scale after the ignition switch is turned to the Off position. The instrument cluster circuitry controls the gauge needle position and provides the following features:

- **Engine Temperature High Message** - Each time the cluster receives a message from the PCM indicating the engine coolant temperature is about 124° C (255° F) or higher, the gauge needle is moved to the beginning of the red zone on the gauge scale, the check gauges indicator is illuminated, and a single chime tone is sounded. The chime tone feature will occur only once per ignition cycle. The gauge needle remains in the red zone and the check gauges indicator remains illuminated until the cluster receives a message from the PCM indicating that the engine temperature is about 122° C (252° F) or lower, or until the ignition switch is turned to the Off position, whichever occurs first.
- **Engine Temperature Critical Message** - Each time the cluster receives a message from the PCM indicating the engine coolant temperature is about 129° C (264° F) or higher, the gauge needle is moved to the far right end of the gauge scale. The gauge needle remains at the far right end of the scale until the cluster receives a message from the PCM indicating that the engine temperature is about 127° C (261° F) or lower, or until the ignition switch is turned to the Off position, whichever occurs first.
- **Message Failure** - If the cluster fails to receive an engine temperature message, it will hold the gauge needle at the last indication for about twelve seconds, until a new message is received, or until the ignition switch is turned to the Off position, whichever occurs first.
- **Actuator Test** - Each time the cluster is put through the actuator test, the gauge needle will be swept across the entire gauge scale and back in order to confirm the functionality of the gauge and the cluster circuitry.

The PCM continually monitors the engine coolant temperature sensor to determine the engine operating temperature. The PCM then sends the proper engine coolant temperature messages to the instrument cluster. For further diagnosis of the engine coolant temperature gauge or the instrument cluster circuitry that controls the gauge, (Refer to 8 - ELECTRICAL/INSTRUMENT CLUSTER - DIAGNOSIS AND TESTING). If the instrument cluster turns on the check gauges indicator due to a high engine temperature gauge reading, it may indicate that the engine or the engine cooling system requires service. For proper diagnosis of the engine coolant temperature sensor, the PCM, the PCI data bus, or the message inputs to the instrument cluster that control the engine coolant temperature gauge, a DRBIII® scan tool and the appropriate diagnostic information are required.

FRONT FOG LAMPS INDICATOR

DESCRIPTION

A front fog lamps indicator lamp is standard equipment on all instrument clusters, but is only operational on vehicles equipped with the optional front fog lamps. The front fog lamps indicator lamp is located in the left edge of the instrument cluster overlay, to the left of the fuel gauge and the voltage gauge. The front fog lamps indicator lamp consists of an International Control and Display Symbol icon for “Front Fog Light” imprinted on a green lens. The lens is located behind a cutout in the opaque layer of the instrument cluster overlay. The dark outer layer of the overlay prevents the indicator from being clearly visible when the lamp is not illuminated. The icon appears silhouetted against a green field through the translucent outer layer of the overlay when the indicator is illuminated from behind by a replaceable incandescent bulb and bulb holder unit located on the instrument cluster electronic circuit board. Because this indicator may remain illuminated for extended periods, it is designed to automatically illuminate at a slightly lower intensity whenever the exterior lighting is turned On. The front fog lamps indicator lens is serviced as a unit

FRONT FOG LAMPS INDICATOR (Continued)

with the instrument cluster lens, hood and mask unit.

OPERATION

The front fog lamps indicator lamp gives an indication to the vehicle operator when the front fog lamps are illuminated. This lamp is controlled by a transistor on the instrument cluster circuit board based upon the cluster programming and electronic messages received by the cluster from the Body Control Module (BCM) over the Programmable Communications Interface (PCI) data bus. The front fog lamps indicator lamp bulb receives battery current on the instrument cluster electronic circuit board through the fused ignition switch output (st-run) circuit whenever the ignition switch is in the On or Start positions; therefore, the lamp will always be off when the ignition switch is in any position except On or Start. The lamp bulb only illuminates when it is provided a path to ground by the instrument cluster transistor. The instrument cluster will turn on the front fog lamps indicator lamp for the following reasons:

- **Front Fog Lamps-On Message** - Each time the cluster receives a message from the BCM indicating the front fog lamps are turned On, the lamp will be illuminated. The lamp remains illuminated until the cluster receives a message from the BCM indicating that the front fog lamps are turned Off, or until the ignition switch is turned to the Off position, whichever occurs first.
- **Actuator Test** - Each time the cluster is put through the actuator test, the lamp will be turned on for the duration of the test to confirm the functionality of the lamp and the cluster circuitry.

The BCM continually monitors the input from the left (lighting) multi-function switch, then sends the proper messages to the instrument cluster. If the front fog lamps indicator fails to light during the actuator test, replace the bulb with a known good unit. For further diagnosis of the front fog lamps indicator lamp or the instrument cluster circuitry that controls the lamp, (Refer to 8 - ELECTRICAL/ INSTRUMENT CLUSTER - DIAGNOSIS AND TESTING). For proper diagnosis of the BCM, the PCI data bus, or the message inputs to the instrument cluster that control the front fog lamps indicator, a DRBIII® scan tool and the appropriate diagnostic information are required.

FUEL GAUGE

DESCRIPTION

A fuel gauge is standard equipment on all instrument clusters. The fuel gauge is located in the lower left quadrant of the instrument cluster, below the voltage gauge. The fuel gauge consists of a movable gauge needle or pointer controlled by the instrument cluster circuitry and a fixed 90 degree scale on the gauge dial face that reads left-to-right from E (or Empty) to F (or Full). An International Control and Display Symbol icon for “Fuel” is located in the center of the gauge dial face, just below the center graduation of the gauge scale. The fuel gauge graphics are either white and red against a black gauge dial face (Laredo), or blue-green and red against a brushed aluminum gauge dial face (Limited), making them clearly visible within the instrument cluster in daylight. When illuminated from behind by the panel lamps dimmer controlled cluster illumination lighting with the exterior lamps turned On, the white graphics (Laredo) appear blue-green, the blue-green graphics (Limited) still appear blue-green, while the red graphics for both models still appear red. The orange gauge needle is internally illuminated. Gauge illumination is provided by replaceable incandescent bulb and bulb holder units located on the instrument cluster electronic circuit board. The fuel gauge is serviced as a minor gauge set with the voltage gauge.

OPERATION

The fuel gauge gives an indication to the vehicle operator of the level of fuel in the fuel tank. This gauge is controlled by the instrument cluster circuit board based upon the cluster programming and electronic messages received by the cluster from the Powertrain Control Module (PCM) over the Programmable Communications Interface (PCI) data bus. The fuel gauge is an air core magnetic unit that receives battery current on the instrument cluster electronic circuit board through the fused ignition switch output (st-run) circuit whenever the ignition switch is in the On or Start positions. The cluster is programmed to move the gauge needle back to the low end of the scale after the ignition switch is turned to the Off position. The instrument cluster circuitry controls the gauge needle position and provides the following features:

- **Less Than Empty Percent Tank Full Message** - Each time the cluster receives a message from the PCM indicating the percent tank full is less than empty, the gauge needle is moved to the far left (low) end of the gauge scale. This message would indicate that the fuel tank sender input to the PCM is a short circuit.
- **More Than Full Percent Tank Full Message** - Each time the cluster receives a message from the PCM indicating the percent tank full is more than full, the gauge needle is moved to the far left (low) end of the gauge scale. This message would indicate that the fuel tank sender input to the PCM is an open circuit.

FUEL GAUGE (Continued)

• **Message Failure** - If the cluster fails to receive a percent tank full message, it will hold the gauge needle at the last indication for about twelve seconds, until a new message is received, or until the ignition switch is turned to the Off position, whichever occurs first.

• **Actuator Test** - Each time the cluster is put through the actuator test, the gauge needle will be swept across the entire gauge scale and back in order to confirm the functionality of the gauge and the cluster circuitry.

The PCM continually monitors the fuel tank sending unit, then sends the proper messages to the instrument cluster. The PCM uses an algorithm to control the negative effect that fuel sloshing within the fuel tank has on accurate inputs from the fuel tank sending unit. For further diagnosis of the fuel gauge or the instrument cluster circuitry that controls the gauge, (Refer to 8 - ELECTRICAL/INSTRUMENT CLUSTER - DIAGNOSIS AND TESTING). For proper diagnosis of the fuel tank sending unit, the PCM, the PCI data bus, or the message inputs to the instrument cluster that control the fuel gauge, a DRBIII® scan tool and the appropriate diagnostic information are required.

HIGH BEAM INDICATOR

DESCRIPTION

A high beam indicator lamp is standard equipment on all instrument clusters. The high beam indicator lamp is located in the upper edge of the instrument cluster overlay, between the tachometer and the speedometer. The high beam indicator lamp consists of an International Control and Display Symbol icon for “High Beam” imprinted on a blue lens. The lens is located behind a cutout in the opaque layer of the instrument cluster overlay. The dark outer layer of the overlay prevents the indicator from being clearly visible when the lamp is not illuminated. The icon appears silhouetted against a blue field through the translucent outer layer of the overlay when the indicator is illuminated from behind by a replaceable incandescent bulb and bulb holder unit located on the instrument cluster electronic circuit board. Because this indicator may remain illuminated for extended periods, it is designed to automatically illuminate at a slightly lower intensity whenever the exterior lighting is turned On. The high beam indicator lens is serviced as a unit with the instrument cluster lens, hood and mask unit.

OPERATION

The high beam indicator lamp gives an indication to the vehicle operator when the headlamp high beams are illuminated. This lamp is controlled by a transistor on the instrument cluster circuit board based upon the cluster programming and electronic messages received by the cluster from the Body Control Module (BCM) over the Programmable Communications Interface (PCI) data bus. The high beam indicator lamp bulb receives ground on the instrument cluster electronic circuit board through the fused ignition switch output (st-run) circuit whenever the ignition switch is in the On or Start positions; therefore, the lamp remains operational regardless of the ignition switch position. The lamp bulb only illuminates when it is provided with battery current by the instrument cluster transistor. The instrument cluster will turn on the high beam indicator lamp for the following reasons:

• **High Beam Headlamps-On Message** - Each time the cluster receives a message from the BCM indicating the headlamp high beams are turned On, the lamp will be illuminated. The lamp remains illuminated until the cluster receives a message from the BCM indicating that the headlamp high beams are turned Off, or until the ignition switch is turned to the Off position, whichever occurs first.

• **Actuator Test** - Each time the cluster is put through the actuator test, the lamp will be turned on for the duration of the test to confirm the functionality of the lamp and the cluster circuitry.

The BCM continually monitors the input from the left (lighting) multi-function switch, then sends the proper messages to the instrument cluster. If the high beam indicator fails to light during the actuator test, replace the bulb with a known good unit. For further diagnosis of the high beam indicator lamp or the instrument cluster circuitry that controls the lamp, (Refer to 8 - ELECTRICAL/INSTRUMENT CLUSTER - DIAGNOSIS AND TESTING). For proper diagnosis of the BCM, the PCI data bus, or the message inputs to the instrument cluster that control the high beam indicator, a DRBIII® scan tool and the appropriate diagnostic information are required.

LOW COOLANT INDICATOR

DESCRIPTION

A low coolant indicator lamp is used only on instrument clusters in vehicles equipped with an optional diesel engine. This indicator should not be confused with the coolant level low indication provided by the Electronic Vehicle Information Center (EVIC) of vehicles equipped with a gasoline engine, although they do perform the same function. The low coolant indicator lamp is located in the lower right corner of the instrument cluster overlay, next to the

LOW COOLANT INDICATOR (Continued)

fuel gauge. The low coolant indicator lamp consists of an International Control and Display Symbol icon for "Low Coolant" imprinted on an amber lens. The lens is located behind a cutout in the opaque layer of the instrument cluster overlay. The dark outer layer of the overlay prevents the indicator from being clearly visible when the lamp is not illuminated. The icon appears silhouetted against an amber field through the translucent outer layer of the overlay when the indicator is illuminated from behind by a replaceable incandescent bulb and bulb holder unit located on the instrument cluster electronic circuit board. Because this indicator may remain illuminated for extended periods, it is designed to automatically illuminate at a slightly lower intensity whenever the exterior lighting is turned On. The low coolant indicator lens is serviced as a unit with the instrument cluster lens, hood and mask unit.

OPERATION

The low coolant indicator lamp gives an indication to the vehicle operator when the coolant level in the coolant reservoir becomes low. This lamp is controlled by a transistor on the instrument cluster circuit board based upon the cluster programming and electronic messages received by the cluster from the Body Control Module (BCM) over the Programmable Communications Interface (PCI) data bus. The low coolant indicator lamp bulb receives battery current on the instrument cluster electronic circuit board through the fused ignition switch output (st-run) circuit whenever the ignition switch is in the On or Start positions; therefore, the lamp will always be off when the ignition switch is in any position except On or Start. The lamp bulb only illuminates when it is provided a path to ground by the instrument cluster transistor. The instrument cluster will turn on the low coolant indicator lamp for the following reasons:

- **Bulb Test** - Each time the ignition switch is turned to the On position the lamp is illuminated for about three seconds.
- **Low Coolant Message** - Each time the cluster receives a message from the BCM indicating the engine coolant is below the minimum level in the coolant reservoir, the lamp will be illuminated. The lamp remains illuminated until the cluster receives a message from the BCM indicating that the engine coolant level is above the minimum level, or until the ignition switch is turned to the Off position, whichever occurs first.
- **Actuator Test** - Each time the cluster is put through the actuator test, the lamp will be turned on for the duration of the test to confirm the functionality of the lamp and the cluster circuitry.

The BCM continually monitors the input from the coolant level switch, then sends the proper messages to the instrument cluster. If the low coolant indicator fails to light during the bulb test, replace the bulb with a known good unit. For further diagnosis of the low coolant indicator lamp or the instrument cluster circuitry that controls the lamp, (Refer to 8 - ELECTRICAL/INSTRUMENT CLUSTER - DIAGNOSIS AND TESTING). For proper diagnosis of the BCM, the PCI data bus, or the message inputs to the instrument cluster that control the low coolant indicator, a DRBIII® scan tool and the appropriate diagnostic information are required.

LOW FUEL INDICATOR

DESCRIPTION

A low fuel indicator lamp is standard equipment on all instrument clusters. The low fuel indicator lamp is located near the lower edge of the instrument cluster overlay, next to the fuel gauge. The low fuel indicator lamp consists of a International Control and Display Symbol icon for "Fuel" imprinted on an amber lens. The lens is located behind a cutout in the opaque layer of the instrument cluster overlay. The dark outer layer of the overlay prevents the icon from being clearly visible when the lamp is not illuminated. The icon appears silhouetted against an amber field through the translucent outer layer of the overlay when the indicator is illuminated from behind by a replaceable incandescent bulb and bulb holder unit located on the instrument cluster electronic circuit board. Because this indicator may remain illuminated for extended periods, it is designed to automatically illuminate at a slightly lower intensity whenever the exterior lighting is turned On. The low fuel indicator lens is serviced as a unit with the instrument cluster lens, hood and mask unit.

OPERATION

The low fuel indicator lamp gives an indication to the vehicle operator when the level of fuel in the fuel tank becomes low. This lamp is controlled by a transistor on the instrument cluster circuit board based upon cluster programming and electronic messages received by the cluster from the Powertrain Control Module (PCM) over the Programmable Communications Interface (PCI) data bus. The low fuel indicator lamp bulb receives battery current on the instrument cluster electronic circuit board through the fused ignition switch output (st-run) circuit whenever the ignition switch is in the On or Start positions; therefore, the lamp will always be off when the ignition switch is in any position except On or Start. The lamp bulb only illuminates when it is switched to ground by the instrument cluster transistor. The

LOW FUEL INDICATOR (Continued)

instrument cluster will turn on the low fuel indicator lamp for the following reasons:

- **Bulb Test** - Each time the ignition switch is turned to the On position the lamp is illuminated for about three seconds.
- **Percent Tank Full Message** - Each time the cluster receives a message from the PCM indicating that the percent tank full of the fuel tank equals about one-eighth full, the lamp will be illuminated. Once the lamp is illuminated, each time the instrument cluster low fuel circuitry receives a message indicating that the percent tank full equals about three-sixteenths full, the lamp will be turned off. The PCM uses an algorithm to control the negative effect that fuel sloshing within the fuel tank has on accurate inputs from the fuel tank sending unit.
- **Actuator Test** - Each time the cluster is put through the actuator test, the lamp will be turned on for the duration of the test to confirm the functionality of the lamp and the cluster circuitry.

The PCM continually monitors the fuel tank sending unit, then sends the proper messages to the instrument cluster. If the low fuel indicator fails to light during the bulb test, replace the bulb with a known good unit. For further diagnosis of the low fuel indicator lamp or the instrument cluster circuitry that controls the lamp, (Refer to 8 - ELECTRICAL/INSTRUMENT CLUSTER - DIAGNOSIS AND TESTING). For proper diagnosis of the fuel tank sending unit, the PCM, the PCI data bus, or the message inputs to the instrument cluster that control the low fuel indicator, a DRBIII® scan tool and the appropriate diagnostic information are required.

MALFUNCTION INDICATOR LAMP (MIL)

DESCRIPTION

A Malfunction Indicator Lamp (MIL) is standard equipment on all instrument clusters. The MIL is located near the right edge of the instrument cluster overlay, to the right of the oil pressure gauge. The MIL consists of an International Control and Display Symbol icon for “Engine” imprinted on an amber lens. The lens is located behind a cutout in the opaque layer of the instrument cluster overlay. The dark outer layer of the overlay prevents the icon from being clearly visible when the lamp is not illuminated. The icon appears silhouetted against an amber field through the translucent outer layer of the overlay when the indicator is illuminated from behind by a replaceable incandescent bulb and bulb holder unit located on the instrument cluster electronic circuit board. The MIL lens is serviced as a unit with the instrument cluster lens, hood and mask unit.

OPERATION

The Malfunction Indicator Lamp (MIL) gives an indication to the vehicle operator when the Powertrain Control Module (PCM) has recorded a Diagnostic Trouble Code (DTC) for an On-Board Diagnostics II (OBDII) emissions-related circuit or component malfunction. This lamp is controlled by a transistor on the instrument cluster circuit board based upon the cluster programming and electronic messages received by the cluster from the Powertrain Control Module (PCM) over the Programmable Communications Interface (PCI) data bus. The MIL bulb receives battery current on the instrument cluster electronic circuit board through the fused ignition switch output (st-run) circuit whenever the ignition switch is in the On or Start positions; therefore, the lamp will always be off when the ignition switch is in any position except On or Start. The lamp bulb only illuminates when it is provided a path to ground by the instrument cluster transistor. The instrument cluster will turn on the MIL for the following reasons:

- **Bulb Test** - Each time the ignition switch is turned to the On position the lamp is illuminated for about seven seconds.
- **PCM Lamp-On Message** - Each time the cluster receives a lamp-on message from the PCM, the lamp will be illuminated. The lamp can be flashed on and off, or illuminated solid, as dictated by the PCM message. For some DTC’s, if a problem does not recur, the PCM will send a lamp-off message automatically. Other DTC’s may require that a fault be repaired and the PCM be reset before a lamp-off message will be sent. For more information on the PCM and the DTC set and reset parameters, (Refer to 25 - EMISSIONS CONTROL - OPERATION).
- **Communication Error** - If the cluster receives no lamp-on message from the PCM for twenty seconds, the MIL lamp is illuminated by the instrument cluster to indicate a loss of bus communication. The lamp remains controlled and illuminated by the cluster until a valid lamp-on message is received from the PCM.
- **Actuator Test** - Each time the cluster is put through the actuator test, the lamp will be turned on for the duration of the test to confirm the functionality of the lamp and the cluster circuitry.

The PCM continually monitors the fuel and emissions system circuits and sensors to decide whether the system is in good operating condition. The PCM then sends the proper lamp-on or lamp-off messages to the instrument cluster. If the MIL fails to light during the bulb test, replace the bulb with a known good unit. For further diagnosis of the MIL or the instrument cluster circuitry that controls the lamp, (Refer to 8 - ELECTRICAL/INSTRUMENT CLUSTER - DIAGNOSIS AND TESTING). If the instru-

MALFUNCTION INDICATOR LAMP (MIL) (Continued)

ment cluster turns on the MIL after the bulb test, it may indicate that a malfunction has occurred and that the fuel and emissions systems may require service. For proper diagnosis of the fuel and emissions systems, the PCM, the PCI data bus, or the message inputs to the instrument cluster that control the MIL, a DRBIII® scan tool and the appropriate diagnostic information are required.

ODOMETER

DESCRIPTION

An odometer and trip odometer are standard equipment in all instrument clusters. The odometer and trip odometer information are displayed in a common electronic Vacuum-Fluorescent Display (VFD), which is visible through a small window cutout centered on the lower edge of the speedometer gauge dial face. However, the odometer and trip odometer information are not displayed simultaneously. The trip odometer reset switch on the instrument cluster circuit board toggles the display between odometer and trip odometer modes by depressing the odometer/trip odometer switch knob that extends through the lower edge of the cluster lens, just right of the speedometer. Both the odometer and the trip odometer information is stored in the instrument cluster memory.

The odometer can display values up to 999,999 kilometers (999,999 miles). The odometer latches at these values, and will not roll over to zero. The trip odometer can display values up to 999.9 kilometers (999.9 miles) before it rolls over to zero. The odometer display does not have a decimal point and will not show values less than a full unit (kilometer or mile), the trip odometer display does have a decimal point and will show tenths of a unit (kilometer or mile). The unit of measure for the odometer and trip odometer display is not shown in the VFD. The unit of measure for the instrument cluster odometer/trip odometer is selected at the time that it is manufactured, and cannot be changed. During daylight hours (exterior lamps Off) the VFD is illuminated at full brightness for clear visibility. At night (exterior lamps are On) the VFD lighting level is adjusted with the other cluster illumination lamps using the panel lamps dimmer input from the left (lighting) multi-function switch. The VFD, the trip odometer switch, and the trip odometer switch button are serviced as a unit with the instrument cluster housing, which includes the electronic circuit board and the rear housing cover. The trip odometer switch knob is available for separate service replacement.

OPERATION

The odometer and trip odometer give an indication to the vehicle operator of the distance the vehicle has traveled. This gauge is controlled by the instrument cluster circuit board based upon the cluster programming and electronic messages received by the cluster from the Powertrain Control Module (PCM) over the Programmable Communications Interface (PCI) data bus. The odometer and trip odometer information is displayed by the instrument cluster Vacuum-Fluorescent Display (VFD), and the VFD will not display odometer or trip odometer information after the ignition switch is turned to the Off position. The instrument cluster circuitry controls the VFD and provides the following features:

- **Odometer/Trip Odometer Display Toggling** - Actuating the trip odometer reset switch momentarily with the ignition switch in the On position will toggle the VFD between the odometer and trip odometer display. Each time the ignition switch is turned to the On position the VFD will automatically return to the mode (odometer or trip odometer) last displayed when the ignition switch was turned to the Off position.
- **Trip Odometer Reset** - When the trip odometer reset switch is pressed and held for longer than about two seconds will reset the trip odometer to 000.0 kilometers (miles). The VFD must be displaying the trip odometer information in order for the trip odometer information to be reset.
- **Message Failure** - If the cluster fails to receive a distance message during normal operation, it will hold and display the last data received until the ignition switch is turned to the Off position. If the cluster does not receive a distance message within one second after the ignition switch is turned to the On position, it will display the last distance message stored in the cluster memory. If the cluster is unable to display distance information due to an error internal to the cluster, the VFD display will be blank.
- **Actuator Test** - Each time the cluster is put through the actuator test, the VFD will display all of each number (0 through 9) in steps to confirm the functionality of the VFD and the cluster circuitry.

The PCM continually monitors the vehicle speed sensor, then sends the proper distance messages to the instrument cluster. For further diagnosis of the odometer/trip odometer or the instrument cluster circuitry that controls these functions, (Refer to 8 - ELECTRICAL/INSTRUMENT CLUSTER - DIAGNOSIS AND TESTING). For proper diagnosis of the vehicle speed sensor, the PCM, the PCI data bus, or the message inputs to the instrument cluster that control the odometer/trip odometer, a DRBIII® scan tool and the appropriate diagnostic information are required.

OIL PRESSURE GAUGE

DESCRIPTION

An oil pressure gauge is standard equipment on all instrument clusters. The oil pressure gauge is located in the upper right quadrant of the instrument cluster, above the engine coolant temperature gauge. The oil pressure gauge consists of a movable gauge needle or pointer controlled by the instrument cluster circuitry and a fixed 90 degree scale on the gauge dial face that reads left-to-right either from 0 kg/cm^2 to 8.3 kg/cm^2, or from 0 psi to 80 psi, depending upon the market for which the vehicle is manufactured. An International Control and Display Symbol icon for "Engine Oil" is located in the center of the gauge dial face, directly below the 4 kg/cm^2 or 40 psi graduation of the gauge scale. The oil pressure gauge graphics are either white and red against a black gauge dial face (Laredo), or blue-green and red against a brushed aluminum gauge dial face (Limited), making them clearly visible within the instrument cluster in daylight. When illuminated from behind by the panel lamps dimmer controlled cluster illumination lighting with the exterior lamps turned On, the white graphics (Laredo) appear blue-green, the blue-green graphics (Limited) still appear blue-green, while the red graphics for both models still appear red. The orange gauge needle is internally illuminated. Gauge illumination is provided by replaceable incandescent bulb and bulb holder units located on the instrument cluster electronic circuit board. The oil pressure gauge is serviced as a minor gauge set with the engine coolant temperature gauge.

OPERATION

The oil pressure gauge gives an indication to the vehicle operator of the engine oil pressure. This gauge is controlled by the instrument cluster circuit board based upon the cluster programming and electronic messages received by the cluster from the Powertrain Control Module (PCM) over the Programmable Communications Interface (PCI) data bus. The oil pressure gauge is an air core magnetic unit that receives battery current on the instrument cluster electronic circuit board through the fused ignition switch output (st-run) circuit whenever the ignition switch is in the On or Start positions. The cluster is programmed to move the gauge needle back to the low end of the scale after the ignition switch is turned to the Off position. The instrument cluster circuitry controls the gauge needle position and provides the following features:

- **Engine Oil Pressure Low Message** - Each time the cluster receives a message from the PCM indicating the engine oil pressure is about 0.003 kg/cm^2 or lower (about 6 psi or lower), the gauge needle is moved to the far left (low) end of the gauge scale and the check gauges indicator is illuminated. The gauge needle remains at the low end of the scale and the check gauges indicator remains illuminated until the cluster receives a message from the PCM indicating that the engine oil pressure is about 0.004 kg/cm^2 or higher (about 8 psi or higher), or until the ignition switch is turned to the Off position, whichever occurs first. The cluster will only turn the check gauges indicator lamp on in response to an engine oil pressure low message if the engine speed is 300 rpm or greater.
- **Message Failure** - If the cluster fails to receive an engine oil pressure message, it will hold the gauge needle at the last indication for about twelve seconds, until a new message is received, or until the ignition switch is turned to the Off position, whichever occurs first.
- **Actuator Test** - Each time the cluster is put through the actuator test, the gauge needle will be swept across the entire gauge scale and back in order to confirm the functionality of the gauge and the cluster circuitry.

The PCM continually monitors the engine oil pressure sensor to determine the engine oil pressure. The PCM then sends the proper engine oil pressure messages to the instrument cluster. For further diagnosis of the oil pressure gauge or the instrument cluster circuitry that controls the gauge, (Refer to 8 - ELECTRICAL/INSTRUMENT CLUSTER - DIAGNOSIS AND TESTING). If the instrument cluster turns on the check gauges indicator due to a low oil pressure gauge reading, it may indicate that the engine or the engine oiling system requires service. For proper diagnosis of the engine oil pressure sensor, the PCM, the PCI data bus, or the message inputs to the instrument cluster that control the oil pressure gauge, a DRBIII® scan tool and the appropriate diagnostic information are required.

OVERDRIVE OFF INDICATOR

DESCRIPTION

An overdrive off indicator lamp is standard equipment on all instrument clusters. The overdrive off indicator lamp is located near the lower center edge of the tachometer gauge dial face, just below the tachometer needle hub. The overdrive off indicator lamp consists of the words "O/D OFF" imprinted on an amber lens. The lens is located behind a cutout in the opaque layer of the tachometer gauge dial face overlay. The dark outer layer of the gauge dial face overlay prevents the indicator from being clearly visible when the lamp is not illuminated. The words "O/D OFF" appear silhouetted against an amber field

OVERDRIVE OFF INDICATOR (Continued)

through the translucent outer layer of the gauge dial face overlay when the indicator is illuminated from behind by a replaceable incandescent bulb and bulb holder unit located on the instrument cluster electronic circuit board. Because this indicator may remain illuminated for extended periods, it is designed to automatically illuminate at a slightly lower intensity whenever the exterior lighting is turned On. The overdrive off indicator lens is serviced as a unit with the tachometer.

OPERATION

The overdrive off indicator lamp gives an indication to the vehicle operator when the Off position of the overdrive off switch has been selected, disabling the electronically controlled overdrive feature of the automatic transmission. This lamp is controlled by a transistor on the instrument cluster circuit board based upon electronic messages received over the Programmable Communications Interface (PCI) data bus. These messages are sent by the Powertrain Control Module (PCM) of vehicles equipped with a 42RE or 44RE automatic transmission, and by the Transmission Control Module (TCM) of vehicles equipped with a 45RFE automatic transmission. The overdrive off indicator lamp bulb receives battery current on the instrument cluster electronic circuit board through the fused ignition switch output (st-run) circuit whenever the ignition switch is in the On or Start positions; therefore, the lamp will always be off when the ignition switch is in any position except On or Start. The lamp bulb only illuminates when it is provided a path to ground by the instrument cluster transistor. The instrument cluster will turn on the overdrive off indicator lamp for the following reasons:

- **Bulb Test** - Each time the ignition switch is turned to the On position the lamp is illuminated for about three seconds.
- **Overdrive Off Lamp-On Message** - Each time the cluster receives an overdrive off lamp-on message from the PCM or TCM indicating that the Off position of the overdrive off switch has been selected, the lamp will be illuminated. The lamp remains illuminated until the cluster receives an overdrive off lamp-off message from the PCM or TCM, or until the ignition switch is turned to the Off position, whichever occurs first.
- **Actuator Test** - Each time the cluster is put through the actuator test, the lamp will be turned on for the duration of the test to confirm the functionality of the lamp and the cluster circuitry.

The PCM or TCM continually monitors the overdrive off switch to determine the proper outputs to the automatic transmission. The PCM or TCM then sends the proper overdrive off indicator lamp messages to the instrument cluster. If the overdrive off indicator fails to light during the bulb test, replace the bulb with a known good unit. For further diagnosis of the overdrive off indicator lamp or the instrument cluster circuitry that controls the lamp, (Refer to 8 - ELECTRICAL/INSTRUMENT CLUSTER - DIAGNOSIS AND TESTING). For proper diagnosis of the overdrive control system, the PCM, ,the TCM, the PCI data bus, or the message inputs to the instrument cluster that control the overdrive off indicator, a DRBIII® scan tool and the appropriate diagnostic information are required.

REAR FOG LAMPS INDICATOR

DESCRIPTION

A rear fog lamps indicator lamp is standard equipment on all instrument clusters, but is only functional on vehicles built for sale in certain international markets where rear fog lamps are required equipment. The rear fog lamps indicator lamp is located on the left edge of the instrument cluster overlay, to the left of the voltage gauge. The rear fog lamps indicator lamp consists of an International Control and Display Symbol icon for “Rear Fog Light” imprinted on an amber lens. The lens is located behind a cutout in the opaque layer of the instrument cluster overlay. The dark outer layer of the overlay prevents the indicator from being clearly visible when the lamp is not illuminated. The icon appears silhouetted against an amber field through the translucent outer layer of the overlay when the indicator is illuminated from behind by a replaceable incandescent bulb and bulb holder unit located on the instrument cluster electronic circuit board. Because this indicator may remain illuminated for extended periods, it is designed to automatically illuminate at a slightly lower intensity whenever the exterior lighting is turned On. The rear fog lamps indicator lens is serviced as a unit with the instrument cluster lens, hood and mask unit.

OPERATION

The rear fog lamps indicator lamp gives an indication to the vehicle operator when the rear fog lamps are illuminated. This lamp is controlled by a transistor on the instrument cluster circuit board based upon the cluster programming and electronic messages received by the cluster from the Body Control Module (BCM) over the Programmable Communications Interface (PCI) data bus. The rear fog lamps indicator lamp bulb receives battery current on the instrument cluster electronic circuit board through the fused ignition switch output (st-run) circuit whenever the ignition switch is in the On or Start positions; therefore, the lamp will always be off when the ignition switch is in

REAR FOG LAMPS INDICATOR (Continued)

any position except On or Start. The lamp bulb only illuminates when it is provided a path to ground by the instrument cluster transistor. The instrument cluster will turn on the rear fog lamps indicator lamp for the following reasons:

- **Rear Fog Lamps-On Message** - Each time the cluster receives a message from the BCM indicating the rear fog lamps are turned On, the lamp will be illuminated. The lamp remains illuminated until the cluster receives a message from the BCM indicating that the rear fog lamps are turned Off, or until the ignition switch is turned to the Off position, whichever occurs first.
- **Actuator Test** - Each time the cluster is put through the actuator test, the lamp will be turned on for the duration of the test to confirm the functionality of the lamp and the cluster circuitry.

The BCM continually monitors the input from the left (lighting) multi-function switch, then sends the proper messages to the instrument cluster. If the rear fog lamps indicator fails to light during the actuator test, replace the bulb with a known good unit. For further diagnosis of the rear fog lamps indicator lamp or the instrument cluster circuitry that controls the lamp, (Refer to 8 - ELECTRICAL/INSTRUMENT CLUSTER - DIAGNOSIS AND TESTING). For proper diagnosis of the BCM, the PCI data bus, or the message inputs to the instrument cluster that control the rear fog lamps indicator, a DRBIII® scan tool and the appropriate diagnostic information are required.

SEATBELT INDICATOR

DESCRIPTION

A seatbelt indicator is standard equipment on all instrument clusters. The seatbelt indicator lamp is located near the lower edge of the instrument cluster overlay, between the tachometer and the speedometer. The seatbelt indicator consists of an International Control and Display Symbol icon for “Seat Belt” imprinted on a red lens. The lens is located behind a cutout in the opaque layer of the instrument cluster overlay. The dark outer layer of the overlay prevents the icon from being clearly visible when the lamp is not illuminated. The icon appears silhouetted against a red field through the translucent outer layer of the overlay when it is illuminated from behind by a replaceable incandescent bulb and bulb holder unit located on the instrument cluster electronic circuit board. The seatbelt indicator is serviced as a unit with the instrument cluster lens, hood and mask unit.

OPERATION

The seatbelt indicator lamp gives a short reminder indication to the vehicle operator after the ignition switch is turned to the On or Start positions, regardless of whether the seatbelts have been fastened. Following the short reminder indication, the lamp illuminates whenever the driver seat belt is unfastened with the ignition switch in the On position. This lamp is controlled by a transistor on the instrument cluster circuit board based upon the cluster programming and electronic messages received by the cluster over the Programmable Communications Interface (PCI) data bus. The seatbelt indicator lamp bulb receives battery current on the instrument cluster electronic circuit board through the fused ignition switch output (st-run) circuit whenever the ignition switch is in the On or Start positions; therefore, the lamp will always be off when the ignition switch is in any position except On or Start. The lamp bulb only illuminates when it is provided a path to ground by the instrument cluster transistor. The instrument cluster will turn on the seatbelt indicator lamp for the following reasons:

- **Ignition Switch In On or Start Position** - The lamp is illuminated by the instrument cluster programming each time the cluster receives a battery current input on the fused ignition switch output (st-run) circuit. The lamp remains illuminated until about six seconds have elapsed, or until the ignition switch is turned to the Off position, whichever occurs first.
- **Seatbelt Lamp-On Message** - After the initial six second reminder indication, each time the cluster receives a lamp-on message from the BCM, the lamp will be illuminated. The lamp remains illuminated until the cluster receives a lamp-off message from the BCM, or until the ignition switch is turned to the Off position, whichever occurs first.
- **Actuator Test** - Each time the cluster is put through the actuator test, the lamp will be turned on for the duration of the test to confirm the functionality of the lamp and the cluster circuitry.

The instrument cluster continually monitors the ignition switch to determine when the reminder indication is required. If the lamp remains illuminated after the reminder indication, it indicates that the BCM has detected that the driver seat belt is not fastened. The BCM continually monitors the seat belt switch circuit, then sends the proper lamp-on or lamp-off messages to the instrument cluster. If the seatbelt indicator fails to light when the ignition switch is turned to the On or Start positions, replace the bulb with a known good unit. For further diagnosis of the seatbelt indicator lamp or the instrument cluster circuitry that controls the lamp, (Refer to 8 - ELECTRICAL/INSTRUMENT CLUSTER - DIAGNOSIS AND TESTING). For proper diagnosis of the seat

SEATBELT INDICATOR (Continued)

belt switch, the BCM, the PCI data bus, or the message inputs to the instrument cluster that control the seatbelt indicator lamp, a DRBIII® scan tool and the appropriate diagnostic information are required.

SHIFT INDICATOR (TRANSFER CASE)

DESCRIPTION

A part time indicator is standard equipment on all instrument clusters, but is only functional on vehicles equipped with the standard equipment Selec-Trac four-wheel drive system. The part time indicator lamp is located near the right edge of the instrument cluster overlay, just to the right of the engine coolant temperature gauge. The part time indicator consists of the words “PART TIME” imprinted on an amber lens. The lens is located behind a cutout in the opaque layer of the instrument cluster overlay. The dark outer layer of the overlay prevents the indicator from being clearly visible when the lamp is not illuminated. The words “PART TIME” appear silhouetted in an amber field through the translucent outer layer of the overlay when the indicator is illuminated from behind by a replaceable incandescent bulb and bulb holder unit located on the instrument cluster electronic circuit board. Because this indicator may remain illuminated for extended periods, it is designed to automatically illuminate at a slightly lower intensity whenever the exterior lighting is turned On. The part time indicator is serviced as a unit with the instrument cluster lens, hood and mask unit.

OPERATION

The part time indicator lamp gives an indication to the vehicle operator that a part time operating mode of the four-wheel drive transfer case is selected. On vehicles with the standard equipment Selec-Trac four-wheel drive system, the part time indicator lights when the NV-242 transfer case is engaged in either the 4 X 4 Part Time or 4 Lo operating ranges. This lamp is controlled by a hard wired transfer case switch input to the instrument cluster electronic circuit board. The part time indicator lamp bulb receives battery current on the instrument cluster electronic circuit board through the fused ignition switch output (st-run) circuit whenever the ignition switch is in the On or Start positions; therefore, the lamp will always be off when the ignition switch is in any position except On or Start. The lamp bulb only illuminates when it is provided a path to ground by the transfer case switch.

The transfer case switch is connected in series between ground and the part time 4 wheel drive indicator driver input to the instrument cluster. For further information on the NV-242 transfer case and the transfer case operating ranges, (Refer to 21 - TRANSMISSION/TRANSAXLE/TRANSFER CASE - OPERATION - NV-242). The part time indicator lamp and the transfer case switch can be diagnosed using conventional diagnostic tools and methods.

DIAGNOSIS AND TESTING - PART TIME INDICATOR

The diagnosis found here addresses an inoperative part time indicator lamp condition. If the problem being diagnosed is related to lamp accuracy, be certain to confirm that the problem is with the lamp or transfer case switch and not with a damaged or inoperative transfer case or transfer case shift linkage. (Refer to 21 - TRANSMISSION/TRANSAXLE/TRANSFER CASE - DIAGNOSIS AND TESTING - NV-242). If no transfer case problem is found, the following procedure will help to locate a short or open in the part time indicator lamp control circuit. Refer to the appropriate wiring information. The wiring information includes wiring diagrams, proper wire and connector repair procedures, details of wire harness routing and retention, connector pin-out information and location views for the various wire harness connectors, splices and grounds.

WARNING: ON VEHICLES EQUIPPED WITH AIRBAGS, DISABLE THE AIRBAG SYSTEM BEFORE ATTEMPTING ANY STEERING WHEEL, STEERING COLUMN, OR INSTRUMENT PANEL COMPONENT DIAGNOSIS OR SERVICE. DISCONNECT AND ISOLATE THE BATTERY NEGATIVE (GROUND) CABLE, THEN WAIT TWO MINUTES FOR THE AIRBAG SYSTEM CAPACITOR TO DISCHARGE BEFORE PERFORMING FURTHER DIAGNOSIS OR SERVICE. THIS IS THE ONLY SURE WAY TO DISABLE THE AIRBAG SYSTEM. FAILURE TO TAKE THE PROPER PRECAUTIONS COULD RESULT IN ACCIDENTAL AIRBAG DEPLOYMENT AND POSSIBLE PERSONAL INJURY.

LAMP DOES NOT ILLUMINATE WITH PART TIME MODE SELECTED

(1) Disconnect and isolate the battery negative cable. Disconnect the engine wire harness connector for the transfer case switch from the transfer case switch connector receptacle. Check for continuity between the ground circuit cavity of the engine wire harness connector for the transfer case switch and a good ground. There should be continuity. If OK, go to Step 2. If not OK, repair the open ground circuit to ground (G104) as required.

(2) Reconnect the battery negative cable. Turn the ignition switch to the On position. Install a jumper wire between the part time 4 wheel drive indicator

SHIFT INDICATOR (TRANSFER CASE) (Continued)

driver circuit cavity of the engine wire harness connector for the transfer case switch and a good ground. The part time indicator lamp should light. If OK, replace the faulty transfer case switch. If not OK, go to Step 3.

(3) Turn the ignition switch to the Off position. Disconnect and isolate the battery negative cable. Remove the instrument cluster from the instrument panel. Check for continuity between the part time 4 wheel drive indicator driver circuit cavities of the instrument panel wire harness connector for the instrument cluster and the engine wire harness connector for the transfer case switch. There should be continuity. If OK, replace the faulty part time indicator lamp bulb. If not OK, repair the open part time 4 wheel drive indicator driver circuit between the instrument cluster and the transfer case switch as required.

LAMP STAYS ILLUMINATED WITH PART TIME MODE NOT SELECTED

(1) Disconnect and isolate the battery negative cable. Disconnect the engine wire harness connector for the transfer case switch from the switch connector receptacle. Check for continuity between the ground circuit and the part time 4 wheel drive indicator driver circuit terminals in the transfer case switch connector receptacle. There should be no continuity. If OK, repair the shorted part time 4 wheel drive indicator driver circuit between the transfer case switch and the instrument cluster as required. If not OK, replace the faulty transfer case switch.

SPEEDOMETER

DESCRIPTION

A speedometer is standard equipment on all instrument clusters. The speedometer is located just to the right of the tachometer near the center of the instrument cluster. The speedometer consists of a movable gauge needle or pointer controlled by the instrument cluster circuitry and a fixed 210 degree primary scale on the gauge dial face that reads left-to-right either from 0 to 125 mph, or from 0 to 230 km/h, depending upon the market for which the vehicle is manufactured. Each version also has a secondary inner scale on the gauge dial face that provides the equivalent opposite units from the primary scale. Text appearing in the center of the gauge dial face just beneath the hub of the speedometer needle abbreviates the unit of measure for the primary scale in all upper case letters (i.e.: MPH or KM/H), followed by the unit of measure for the secondary scale in all lower case letters (i.e.: mph or km/h). The odometer/trip odometer Vacuum-Fluorescent Display (VFD) on the instrument cluster electronic circuit board is visible through a dedicated rectangular cutout near the center of the lower edge of the gauge dial face. The speedometer graphics are either white and red against a black gauge dial face (Laredo), or blue-green and red against a brushed aluminum gauge dial face (Limited), making them clearly visible within the instrument cluster in daylight. When illuminated from behind by the panel lamps dimmer controlled cluster illumination lighting with the exterior lamps turned On, the white graphics (Laredo) appear blue-green, the blue-green graphics (Limited) still appear blue-green, while the red graphics for both models still appear red. The orange gauge needle is internally illuminated. Gauge illumination is provided by replaceable incandescent bulb and bulb holder units located on the instrument cluster electronic circuit board. The speedometer is available for individual service replacement.

OPERATION

The speedometer gives an indication to the vehicle operator of the vehicle road speed. This gauge is controlled by the instrument cluster circuit board based upon the cluster programming and electronic messages received by the cluster from the Powertrain Control Module (PCM) over the Programmable Communications Interface (PCI) data bus. The speedometer is an air core magnetic unit that receives battery current on the instrument cluster electronic circuit board through the fused ignition switch output (st-run) circuit whenever the ignition switch is in the On or Start positions. The cluster is programmed to move the gauge needle back to the low end of the scale after the ignition switch is turned to the Off position. The instrument cluster circuitry controls the gauge needle position and provides the following features:

- **Message Failure** - If the cluster fails to receive a speedometer message, it will hold the gauge needle at the last indication for about four seconds, or until the ignition switch is turned to the Off position, whichever occurs first. If a new speedometer message is not received after about four seconds, the gauge needle will return to the far left (low) end of the scale.
- **Actuator Test** - Each time the cluster is put through the actuator test, the gauge needle will be swept across the entire gauge scale and back in order to confirm the functionality of the gauge and the cluster circuitry.

The PCM continually monitors the vehicle speed sensor to determine the vehicle road speed. The PCM then sends the proper vehicle speed messages to the instrument cluster. For further diagnosis of the speedometer or the instrument cluster circuitry that controls the gauge, (Refer to 8 - ELECTRICAL/INSTRUMENT CLUSTER - DIAGNOSIS AND TEST-

SPEEDOMETER (Continued)

ING). For proper diagnosis of the vehicle speed sensor, the PCM, the PCI data bus, or the message inputs to the instrument cluster that control the speedometer, a DRBIII® scan tool and the appropriate diagnostic information are required.

TACHOMETER

DESCRIPTION

A tachometer is standard equipment on all instrument clusters. The tachometer is located just to the left of the speedometer near the center of the instrument cluster. The tachometer consists of a movable gauge needle or pointer controlled by the instrument cluster circuitry and a fixed 210 degree primary scale on the gauge dial face that reads left-to-right either from 0 to 7000 rpm for gasoline engines, or from 0 to 6000 rpm for diesel engines. The gauge scale of the gasoline engine tachometer is red lined at 5300 rpm, while the diesel engine tachometer is red lined at 4750 rpm. The tachometer for the gasoline engine includes the lens for the overdrive off indicator located near the lower center edge of the gauge dial face, while the tachometer for the diesel engine adds a lens for the wait-to-start indicator just to the right of the overdrive off indicator lens. The diesel engine tachometer also includes red text that specifies “DIESEL FUEL ONLY” located in the center of the gauge dial face just above the hub of the tachometer needle. The tachometer graphics are either white and red against a black gauge dial face (Laredo), or blue-green and red against a brushed aluminum gauge dial face (Limited), making them clearly visible within the instrument cluster in daylight. When illuminated from behind by the panel lamps dimmer controlled cluster illumination lighting with the exterior lamps turned On, the white graphics (Laredo) appear blue-green, the blue-green graphics (Limited) still appear blue-green, while the red graphics for both models still appear red. The orange gauge needle is internally illuminated. Gauge illumination is provided by replaceable incandescent bulb and bulb holder units located on the instrument cluster electronic circuit board. The tachometer is available for individual service replacement.

OPERATION

The tachometer gives an indication to the vehicle operator of the engine speed. This gauge is controlled by the instrument cluster circuit board based upon the cluster programming and electronic messages received by the cluster from the Powertrain Control Module (PCM) over the Programmable Communications Interface (PCI) data bus. The tachometer is an air core magnetic unit that receives battery current on the instrument cluster electronic circuit board through the fused ignition switch output (st-run) circuit whenever the ignition switch is in the On or Start positions. The cluster is programmed to move the gauge needle back to the low end of the scale after the ignition switch is turned to the Off position. The instrument cluster circuitry controls the gauge needle position and provides the following features:

- **Message Failure** - If the cluster fails to receive an engine speed message, it will hold the gauge needle at the last indication for about four seconds, or until the ignition switch is turned to the Off position, whichever occurs first. If a new engine speed message is not received after about four seconds, the gauge needle will return to the far left (low) end of the scale.
- **Actuator Test** - Each time the cluster is put through the actuator test, the gauge needle will be swept across the entire gauge scale and back in order to confirm the functionality of the gauge and the cluster circuitry.

The PCM continually monitors the crankshaft position sensor to determine the engine speed. The PCM then sends the proper engine speed messages to the instrument cluster. For further diagnosis of the tachometer or the instrument cluster circuitry that controls the gauge, (Refer to 8 - ELECTRICAL/INSTRUMENT CLUSTER - DIAGNOSIS AND TESTING). For proper diagnosis of the crankshaft position sensor, the PCM, the PCI data bus, or the message inputs to the instrument cluster that control the tachometer, a DRBIII® scan tool and the appropriate diagnostic information are required.

TRANS OVERTEMP INDICATOR

DESCRIPTION

A transmission over-temperature indicator lamp is standard equipment on all instrument clusters. The transmission over-temperature indicator lamp is located near the right edge of the instrument cluster overlay, to the right of the engine coolant temperature gauge. The transmission over-temperature indicator lamp consists of the words “TRANS OVER TEMP” imprinted on an amber lens. The lens is located behind a cutout in the opaque layer of the instrument cluster overlay. The dark outer layer of the overlay prevents the indicator from being clearly visible when the lamp is not illuminated. The words “TRANS OVER TEMP” appear silhouetted against an amber field through the translucent outer layer of the overlay when the indicator is illuminated from behind by a replaceable incandescent bulb and bulb holder unit located on the instrument cluster electronic circuit board. The transmission over-tempera-

TRANS OVERTEMP INDICATOR (Continued)

ture indicator lens is serviced as a unit with the instrument cluster lens, hood and mask unit.

OPERATION

The transmission over-temperature indicator lamp gives an indication to the vehicle operator when the transmission fluid temperature is excessive, which may lead to accelerated transmission component wear or failure. This lamp is controlled by a transistor on the instrument cluster circuit board based upon electronic messages received by the cluster over the Programmable Communications Interface (PCI) data bus. These messages are sent by the Powertrain Control Module (PCM) of vehicles equipped with a 42RE or 44RE automatic transmission, and by the Transmission Control Module (TCM) of vehicles equipped with a 45RFE automatic transmission. The transmission over-temperature indicator lamp bulb receives battery current on the instrument cluster electronic circuit board through the fused ignition switch output (st-run) circuit whenever the ignition switch is in the On or Start positions; therefore, the lamp will always be off when the ignition switch is in any position except On or Start. The lamp bulb only illuminates when it is provided a path to ground by the instrument cluster transistor. The instrument cluster will turn on the transmission over-temperature indicator lamp for the following reasons:

- **Bulb Test** - Each time the ignition switch is turned to the On position the lamp is illuminated for about three seconds.
- **Trans Over-Temp Lamp-On Message** - Each time the cluster receives a trans over-temp lamp-on message from the PCM or TCM indicating that the transmission fluid temperature is 135° C (275° F) or higher, the lamp will be illuminated and a single chime tone is sounded. The chime tone feature will occur only once per ignition cycle. The lamp remains illuminated until the cluster receives a trans over-temp lamp-off message from the PCM or TCM indicating that the transmission fluid temperature is 129° C (265° F) or lower, or until the ignition switch is turned to the Off position, whichever occurs first.
- **Actuator Test** - Each time the cluster is put through the actuator test, the lamp will be turned on for the duration of the test to confirm the functionality of the lamp and the cluster circuitry.

The PCM or TCM continually monitors the transmission temperature sensor to determine the transmission operating conditions. The PCM or TCM then sends the proper trans over-temp indicator lamp messages to the instrument cluster. If the transmission over-temperature indicator fails to light during the bulb test, replace the bulb with a known good unit. If the instrument cluster turns on the transmission over-temperature indicator due to a high transmission oil temperature condition, it may indicate that the transmission or the transmission cooling system requires service. For further diagnosis of the transmission over-temperature indicator lamp or the instrument cluster circuitry that controls the lamp, (Refer to 8 - ELECTRICAL/INSTRUMENT CLUSTER - DIAGNOSIS AND TESTING). For proper diagnosis of the transmission temperature sensor, the PCM, the TCM, the PCI data bus, or the message inputs to the instrument cluster that control the transmission over-temperature indicator, a DRBIII® scan tool and the appropriate diagnostic information are required.

TURN SIGNAL INDICATORS

DESCRIPTION

Two turn signal indicator lamps are standard equipment on all instrument clusters. The turn signal indicator lamps are located near the upper edge of the instrument cluster overlay, the left one is between the voltage gauge and the tachometer, and the right one is between the speedometer and the oil pressure gauge. Each turn signal indicator lamp consists of an International Control and Display Symbol icon for “Turn Warning” imprinted on a green lens. Each lens is located behind a dedicated cutout in the opaque layer of the instrument cluster overlay. The dark outer layer of the overlay prevents these icons from being clearly visible when their lamps are not illuminated. The icons appear silhouetted against a green field through the translucent outer layer of the overlay when the indicator is illuminated from behind by a replaceable incandescent bulb and bulb holder unit located on the instrument cluster electronic circuit board. The turn signal indicator lamps are serviced as a unit with the instrument cluster lens, hood and mask unit.

OPERATION

The turn signal indicator lamps give an indication to the vehicle operator that the turn signal (left or right indicator flashing) or hazard warning (both left and right indicators flashing) have been selected. These lamps are controlled by a hard wired combination flasher input to the instrument cluster electronic circuit board. The turn signal indicator lamp bulbs are grounded on the instrument cluster electronic circuit board at all times. The turn signal indicator lamp bulbs only illuminate when they are provided with battery current by the combination flasher in the Junction Block (JB) through separate left and right turn signal inputs to the instrument cluster; therefore, these lamps can be turned On, regardless of the ignition switch position.

TURN SIGNAL INDICATORS (Continued)

The turn signal indicator lamps are connected in series between ground and the output of the combination flasher, but in parallel with the other turn signal circuits. This arrangement allows the turn signal indicators to remain functional regardless of the condition of the other circuits in the turn signal and hazard warning system. For more information on the turn signal and hazard warning system, (Refer to 8 - ELECTRICAL/LAMPS/LIGHTING - EXTERIOR - OPERATION - TURN SIGNAL & HAZARD WARNING SYSTEM). The turn signal indicator lamps can be diagnosed using conventional diagnostic tools and methods.

DIAGNOSIS AND TESTING - TURN SIGNAL INDICATORS

The diagnosis found here addresses an inoperative turn signal indicator lamp condition. If the problem being diagnosed is related to inoperative turn signal or hazard warning lamps, be certain to repair the turn signal and hazard warning system before attempting to diagnose or repair the turn signal indicator lamps. (Refer to 8 - ELECTRICAL/LAMPS/LIGHTING - EXTERIOR - DIAGNOSIS AND TESTING - TURN SIGNAL & HAZARD WARNING SYSTEM). If no turn signal and hazard warning system problem is found, the following procedure will help locate an open in the turn signal indicator lamp circuit. Refer to the appropriate wiring information. The wiring information includes wiring diagrams, proper wire and connector repair procedures, details of wire harness routing and retention, connector pinout information and location views for the various wire harness connectors, splices and grounds.

WARNING: ON VEHICLES EQUIPPED WITH AIRBAGS, DISABLE THE AIRBAG SYSTEM BEFORE ATTEMPTING ANY STEERING WHEEL, STEERING COLUMN, OR INSTRUMENT PANEL COMPONENT DIAGNOSIS OR SERVICE. DISCONNECT AND ISOLATE THE BATTERY NEGATIVE (GROUND) CABLE, THEN WAIT TWO MINUTES FOR THE AIRBAG SYSTEM CAPACITOR TO DISCHARGE BEFORE PERFORMING FURTHER DIAGNOSIS OR SERVICE. THIS IS THE ONLY SURE WAY TO DISABLE THE AIRBAG SYSTEM. FAILURE TO TAKE THE PROPER PRECAUTIONS COULD RESULT IN ACCIDENTAL AIRBAG DEPLOYMENT AND POSSIBLE PERSONAL INJURY.

(1) Disconnect and isolate the battery negative cable. Remove the instrument cluster from the instrument panel and disconnect the instrument panel wire harness for the instrument cluster from the cluster connector receptacle.

(2) Reconnect the battery negative cable. Activate the hazard warning system by moving the hazard warning switch button to the On position. Check for battery voltage at the inoperative (right or left) turn signal circuit cavity of the instrument panel wire harness connector for the instrument cluster. There should be a switching (on and off) battery voltage signal present. If OK, replace the faulty (right or left) turn signal indicator lamp bulb. If not OK, repair the open (right or left) turn signal circuit between the instrument cluster and the combination flasher in the Junction Block (JB) as required.

VOLTAGE GAUGE

DESCRIPTION

A voltage gauge is standard equipment on all instrument clusters. The voltage gauge is located in the upper left quadrant of the instrument cluster, above the fuel gauge. The voltage gauge consists of a movable gauge needle or pointer controlled by the instrument cluster circuitry and a fixed 90 degree scale on the gauge dial face that reads left-to-right from 9 volts to 19 volts. An International Control and Display Symbol icon for “Battery Charging Condition” is located in the center of the gauge dial face, directly below the 14 volt graduation of the gauge scale. The voltage gauge graphics are either white and red against a black gauge dial face (Laredo), or blue-green and red against a brushed aluminum gauge dial face (Limited), making them clearly visible within the instrument cluster in daylight. When illuminated from behind by the panel lamps dimmer controlled cluster illumination lighting with the exterior lamps turned On, the white graphics (Laredo) appear blue-green, the blue-green graphics (Limited) still appear blue-green, while the red graphics for both models still appear red. The orange gauge needle is internally illuminated. Gauge illumination is provided by replaceable incandescent bulb and bulb holder units located on the instrument cluster electronic circuit board. The voltage gauge is serviced as a minor gauge set with the fuel gauge.

OPERATION

The voltage gauge gives an indication to the vehicle operator of the electrical system voltage. This gauge is controlled by the instrument cluster circuit board based upon the cluster programming and electronic messages received by the cluster from the Powertrain Control Module (PCM) over the Programmable Communications Interface (PCI) data bus. The voltage gauge is an air core magnetic unit that receives battery current on the instrument cluster electronic circuit board through the fused ignition switch output (st-run) circuit whenever the ignition switch is in the On or Start positions. The cluster is

VOLTAGE GAUGE (Continued)

programmed to move the gauge needle back to the low end of the scale after the ignition switch is turned to the Off position. The instrument cluster circuitry controls the gauge needle position and provides the following features:

- **Charge Fail Message** - Each time the cluster receives a message from the PCM indicating a charge fail condition (system voltage is nine volts or lower), the gauge needle is moved to the 9 volt graduation on the gauge scale and the check gauges indicator is illuminated. The gauge needle remains on the 9 volt graduation and the check gauges indicator remains illuminated until the cluster receives a message from the PCM indicating there is no charge fail condition (system voltage is twelve volts or higher, but lower than nineteen volts), or until the ignition switch is turned to the Off position, whichever occurs first.
- **Voltage High Message** - Each time the cluster receives a message from the PCM indicating a voltage high condition (system voltage is nineteen volts or higher), the gauge needle is moved to the 19 volt graduation on the gauge scale and the check gauges indicator is illuminated. The gauge needle remains on the 19 volt graduation and the check gauges indicator remains illuminated until the cluster receives a message from the PCM indicating there is no voltage high condition (system voltage is sixteen volts or lower, but higher than nine volts), or until the ignition switch is turned to the Off position, whichever occurs first.
- **Message Failure** - If the cluster fails to receive a system voltage message, it will hold the gauge needle at the last indication for about twelve seconds, until a new message is received, or until the ignition switch is turned to the Off position, whichever occurs first.
- **Actuator Test** - Each time the cluster is put through the actuator test, the gauge needle will be swept across the gauge face from the minimum to the maximum reading to confirm the functionality of the gauge and the cluster circuitry.

The PCM continually monitors the system voltage to control the generator output. The PCM then sends the proper system voltage messages to the instrument cluster. For further diagnosis of the voltage gauge or the instrument cluster circuitry that controls the gauge, (Refer to 8 - ELECTRICAL/INSTRUMENT CLUSTER - DIAGNOSIS AND TESTING). If the instrument cluster turns on the check gauges indicator due to a charge fail or voltage high condition, it may indicate that the charging system requires service. For proper diagnosis of the charging system, the PCI data bus, or the message inputs to the instrument cluster that control the voltage gauge, a DRBIII® scan tool and the appropriate diagnostic information are required.

WAIT-TO-START INDICATOR

DESCRIPTION

A wait-to-start indicator lamp is used only on instrument clusters in vehicles equipped with an optional diesel engine. The wait-to-start indicator lamp is located near the lower edge of the tachometer gauge dial face, just to the right of the overdrive off indicator. The wait-to-start indicator lamp consists of an International Control and Display Symbol icon for “Diesel Preheat” imprinted on an amber lens. The lens is located behind a cutout in the opaque layer of the tachometer gauge dial face overlay. The dark outer layer of the gauge dial face overlay prevents the icon from being clearly visible when the lamp is not illuminated. The icon appears silhouetted against an amber field through the translucent outer layer of the gauge dial face overlay when the indicator is illuminated from behind by a replaceable incandescent bulb and bulb holder unit located on the instrument cluster electronic circuit board. The wait-to-start indicator lens is serviced as a unit with the tachometer.

OPERATION

The wait-to-start indicator lamp gives an indication to the vehicle operator when the diesel engine glow plugs are energized in their preheat operating mode. This lamp is controlled by a transistor on the instrument cluster circuit board based upon cluster programming and electronic messages received by the cluster from the Powertrain Control Module (PCM) over the Programmable Communications Interface (PCI) data bus. The wait-to-start indicator lamp bulb receives battery current on the instrument cluster electronic circuit board through the fused ignition switch output (st-run) circuit whenever the ignition switch is in the On or Start positions; therefore, the lamp will always be off when the ignition switch is in any position except On or Start. The lamp bulb only illuminates when it is switched to ground by the instrument cluster transistor. The instrument cluster will turn on the wait-to-start indicator lamp for the following reasons:

- **Bulb Test** - Each time the ignition switch is turned to the On position the lamp is illuminated for about three seconds.
- **Wait-To-Start Lamp-On Message** - Each time the cluster receives a wait-to-start lamp-on message from the PCM, the lamp will be illuminated. The lamp remains illuminated until the cluster receives a wait-to-start lamp-off message from the PCM (about 15 seconds maximum after ignition On) or until the ignition switch is turned to the Off position, whichever occurs first.

WAIT-TO-START INDICATOR (Continued)

• **Actuator Test** - Each time the cluster is put through the actuator test, the lamp will be turned on for the duration of the test to confirm the functionality of the lamp and the cluster circuitry.

The PCM continually monitors the Engine Control Module (ECM) output to the glow plug relay, then sends the proper messages to the instrument cluster. If the wait-to-start indicator fails to light during the bulb test, replace the bulb with a known good unit. For further diagnosis of the wait-to-start indicator lamp or the instrument cluster circuitry that controls the lamp, (Refer to 8 - ELECTRICAL/INSTRUMENT CLUSTER - DIAGNOSIS AND TESTING). For proper diagnosis of the ECM, the PCM, the PCI data bus, or the message inputs to the instrument cluster that control the wait-to-start indicator, a DRBIII® scan tool and the appropriate diagnostic information are required.

WATER-IN-FUEL INDICATOR

DESCRIPTION

A water-in-fuel indicator lamp is used only on instrument clusters in vehicles equipped with an optional diesel engine. The water-in-fuel indicator lamp is located near the left edge of the instrument cluster overlay, next to the voltage gauge. The water-in-fuel indicator lamp consists of an International Control and Display Symbol icon for “Water in Fuel” imprinted on a red lens. The lens is located behind a cutout in the opaque layer of the instrument cluster overlay. The dark outer layer of the overlay prevents the icon from being clearly visible when the lamp is not illuminated. The icon appears silhouetted against a red field through the translucent outer layer of the overlay when the indicator is illuminated from behind by a replaceable incandescent bulb and bulb holder unit located on the instrument cluster electronic circuit board. The water-in-fuel indicator lens is serviced as a unit with the instrument cluster lens, hood and mask unit.

OPERATION

The water-in-fuel indicator lamp gives an indication to the vehicle operator when the water accumulated in the diesel engine fuel filter/separator filter bowl requires draining. This lamp is controlled by a transistor on the instrument cluster circuit board based upon cluster programming and electronic messages received by the cluster from the Powertrain Control Module (PCM) over the Programmable Communications Interface (PCI) data bus. The water-in-fuel indicator lamp bulb receives battery current on the instrument cluster electronic circuit board through the fused ignition switch output (st-run) circuit whenever the ignition switch is in the On or Start positions; therefore, the lamp will always be off when the ignition switch is in any position except On or Start. The lamp bulb only illuminates when it is switched to ground by the instrument cluster transistor. The instrument cluster will turn on the water-in-fuel indicator lamp for the following reasons:

• **Bulb Test** - Each time the ignition switch is turned to the On position the lamp is illuminated for about three seconds.

• **Water-In-Fuel Lamp-On Message** - Each time the cluster receives a water-in-fuel lamp-on message from the PCM, the lamp will be illuminated. The lamp remains illuminated until the cluster receives a water-in-fuel lamp-off message from the PCM or until the ignition switch is turned to the Off position, whichever occurs first.

• **Actuator Test** - Each time the cluster is put through the actuator test, the lamp will be turned on for the duration of the test to confirm the functionality of the lamp and the cluster circuitry.

The PCM continually monitors the water-in-fuel sensor, then sends the proper messages to the instrument cluster. If the water-in-fuel indicator fails to light during the bulb test, replace the bulb with a known good unit. For further diagnosis of the water-in-fuel indicator lamp or the instrument cluster circuitry that controls the lamp, (Refer to 8 - ELECTRICAL/INSTRUMENT CLUSTER - DIAGNOSIS AND TESTING). For proper diagnosis of the water-in-fuel sensor, the PCM, the PCI data bus, or the message inputs to the instrument cluster that control the water-in-fuel indicator, a DRBIII® scan tool and the appropriate diagnostic information are required.

LAMPS

TABLE OF CONTENTS

page

LAMPS/LIGHTING - EXTERIOR 1

LAMPS/LIGHTING - INTERIOR 31

LAMPS/LIGHTING - EXTERIOR

TABLE OF CONTENTS

page

LAMPS/LIGHTING - EXTERIOR
DESCRIPTION 2
OPERATION 3
DIAGNOSIS AND TESTING 3
TURN SIGNAL & HAZARD WARNING SYSTEMS 3
SPECIFICATIONS 5
AUTO HEADLAMP SENSOR
DIAGNOSIS AND TESTING 5
AUTO HEADLAMP SENSOR (AHL) 5
REMOVAL 5
INSTALLATION 5
BRAKE LAMP SWITCH
DESCRIPTION 5
OPERATION 5
DIAGNOSIS AND TESTING 5
REMOVAL 6
INSTALLATION 6
ADJUSTMENTS 6
CENTER HIGH MOUNTED STOP LAMP
REMOVAL 6
INSTALLATION 7
COMBINATION FLASHER
DESCRIPTION 7
OPERATION 8
REMOVAL 9
INSTALLATION 10
DAYTIME RUNNING LAMP MODULE
DESCRIPTION 10
OPERATION 10
REMOVAL 10
INSTALLATION 10
FOG LAMP
REMOVAL 11
INSTALLATION 11
FOG LAMP UNIT
REMOVAL 11
INSTALLATION 11
ADJUSTMENTS 11
HEADLAMP
DESCRIPTION 12
OPERATION 12
DIAGNOSIS AND TESTING 13
SYSTEM DIAGNOSIS 13
DIAGNOSTIC PROCEDURES 16
REMOVAL 16
INSTALLATION 16
HEADLAMP SWITCH
DESCRIPTION 16
OPERATION 17
DIAGNOSIS AND TESTING 17
HEADLAMP UNIT
REMOVAL 17
INSTALLATION 17
ADJUSTMENTS 18
LICENSE PLATE LAMP
REMOVAL 20
INSTALLATION 20
LICENSE PLATE LAMP UNIT
REMOVAL 20
INSTALLATION 20
LEFT MULTI-FUNCTION SWITCH
DESCRIPTION 21
OPERATION 22
DIAGNOSIS AND TESTING 23
LEFT MULTI-FUNCTION SWITCH 23
REMOVAL 25
INSTALLATION 26
PARK/TURN SIGNAL LAMP
REMOVAL 28
INSTALLATION 28
TAIL LAMP
DESCRIPTION 28
OPERATION 28

REMOVAL 28
INSTALLATION. 29
TURN SIGNAL CANCEL CAM
DESCRIPTION 29
OPERATION. 29
UNDERHOOD LAMP
REMOVAL 29
INSTALLATION. 30

LAMPS/LIGHTING - EXTERIOR

DESCRIPTION - TURN SIGNAL & HAZARD WARNING SYSTEM

A turn signal and hazard warning system is standard factory-installed safety equipment on this model. The turn signal and hazard warning system includes the following major components, which are described in further detail elsewhere in this service information:

- **Combination Flasher** - The electronic combination flasher is installed in the Junction Block (JB), which is located underneath the instrument panel and outboard of the steering column.
- **Front Side Marker Lamps** - The front side marker lamps are integral to the lower outboard ends of the headlamp modules, just ahead of the front fenders.
- **Hazard Warning Switch** - The hazard warning switch is integral to the left (lighting) multi-function switch on the left side of the steering column. The hazard warning switch button protrudes from a dedicated opening in the shroud on the top of the steering column, just below the steering wheel.
- **Turn Signal Cancel Cam** - The turn signal cancel cam is integral to the multi-function switch mounting housing, which is located beneath the steering column shrouds at the top of the steering column, just below the steering wheel.
- **Turn Signal Indicators** - The two turn signal indicators, one right and one left, are integral to the ElectroMechanical Instrument Cluster (EMIC) located in the instrument panel.
- **Turn Signal Lamps** - The front turn signal lamps are integral to the lower front inboard ends of the headlamp modules, located just outboard of the two sides of the radiator grille opening. The rear turn signal lamps are integral to the tail lamps located on either side of the liftgate opening on the rear of the quarter panels.
- **Turn Signal Switch** - The turn signal switch is integral to the left (lighting) multi-function switch on the left side of the steering column. The left multi-function switch control stalk that actuates the turn signal switch protrudes from a dedicated opening in the steering column shrouds on the left side of column, just below the steering wheel.

The turn signal and hazard warning systems also provide the following features:

- **Flash Lights with Lock** - This customer programmable feature flashes the hazard warning lamps to provide optical verification that the Remote Keyless Entry (RKE) System has received a valid Lock or Unlock request from an RKE transmitter. (Refer to 8 - ELECTRICAL/POWER LOCKS - DESCRIPTION - REMOTE KEYLESS ENTRY SYSTEM).
- **Panic Mode Optical Alert** - This feature flashes the hazard warning lamps to provide an optical alert when the Remote Keyless Entry (RKE) System panic mode is activated by depressing the Panic button on an RKE transmitter. (Refer to 8 - ELECTRICAL/POWER LOCKS - DESCRIPTION - REMOTE KEYLESS ENTRY SYSTEM).
- **Turn Signal On Warning** - This feature is designed to provide the vehicle operator with both visual and audible reminders when a turn signal has been left turned on for an extended period. This feature is included only on vehicles equipped with the optional Electronic Vehicle Information Center (EVIC).(Refer to 8 - ELECTRICAL/OVERHEAD CONSOLE/ELECTRONIC VEHICLE INFO CENTER - DESCRIPTION).
- **Vehicle Theft Security System (VTSS) Optical Alarm** - This feature flashes the hazard warning lamps to provide an optical alarm when the VTSS is armed and activated by an unauthorized entry into the vehicle. (Refer to 8 - ELECTRICAL/VEHICLE THEFT SECURITY - DESCRIPTION - VEHICLE THEFT SECURITY SYSTEM).

Hard wired circuitry connects the turn signal and hazard warning system components to each other through the electrical system of the vehicle. These hard wired circuits are integral to several wire harnesses, which are routed throughout the vehicle and retained by many different methods. These circuits may be connected to each other, to the vehicle electrical system and to the turn signal and hazard warning system components through the use of a combination of soldered splices, splice block connectors and many different types of wire harness terminal connectors and insulators. Refer to the appropriate wiring information. The wiring information includes wiring diagrams, proper wire and connector repair procedures, details of wire harness routing and retention, connector pin-out information and location views for the various wire harness connectors, splices and grounds.

LAMPS/LIGHTING - EXTERIOR (Continued)

OPERATION - TURN SIGNAL & HAZARD WARNING SYSTEM

The turn signal system operates on battery current received on a fused ignition switch output (run) circuit so that the turn signals will only operate with the ignition switch in the On position. The hazard warning system operates on non-switched battery current received on a fused B(+) circuit so that the hazard warning remains operational regardless of the ignition switch position. When the turn signal (left multi-function) switch control stalk is moved up (right turn) or down (left turn), the turn signal system is activated. When the turn signal system is activated, the circuitry of the turn signal switch and the combination flasher will cause the selected (right or left) turn signal indicator, front park/turn signal lamp, front side marker lamp and rear tail/stop/turn signal lamp to flash on and off. With the hazard warning switch in the On position, the hazard warning system is activated. When the hazard warning system is activated, the circuitry of the hazard warning switch and the combination flasher will cause both the right side and the left side turn signal indicators, front park/turn signal lamps, front side marker lamps and rear tail/stop/turn signal lamps to flash on and off.

The Body Control Module (BCM) can also activate the hazard warning system lamps by energizing the combination flasher through a single hard wired connection to the hazard warning switch sense circuit. The BCM grounds the circuit to energize and de-energize the combination flasher in response to internal programming as well as message inputs received over the Programmable Communications Interface (PCI) data bus network. The BCM can energize the combination flasher for a single flash (RKE lock request), several flashes (RKE unlock request), or for extended operation (RKE panic mode and VTSS alarm mode).

Vehicles equipped with the optional Electronic Vehicle Information Center (EVIC) use turn signal status messages received from the Electro-Mechanical Instrument Cluster (EMIC) and distance messages received from the Powertrain Control Module (PCM) over the PCI data bus to determine when the Turn Signal On warning should be activated. The EMIC receives hard wired inputs from the combination flasher to operate the turn signal indicators, then sends the proper turn signal status message to the EVIC. If a turn signal is left on for more than about 1.6 kilometers (1 mile) of driving distance, the EVIC will display a visual “Turn Signal On” message and will send a request to the BCM over the PCI data bus for two sets of three chime tones to sound.

During both the turn signal and the hazard warning operation, if the exterior lamps are turned Off, the front park/turn signal lamps and the front side marker lamps will flash in unison. If the exterior lamps are turned On, the front park/turn signal lamps and the front side marker lamps will flash alternately. Refer to the owner’s manual in the vehicle glove box for more information on the features, use and operation of the turn signal and hazard warning system.

DIAGNOSIS AND TESTING - TURN SIGNAL & HAZARD WARNING SYSTEM

When diagnosing the turn signal and hazard warning circuits, remember that high generator output can burn out bulbs rapidly and repeatedly. If this is a problem on the vehicle being diagnosed, be certain to diagnose and repair the charging system as required. If the problem being diagnosed is related to a failure of the turn signals to automatically cancel following completion of a turn, inspect the left (lighting) multi-function switch for a faulty or damaged cancel actuator and inspect the turn signal cancel cam on the multi-function switch mounting housing for damaged lobes or improper installation. Refer to the appropriate wiring information. The wiring information includes wiring diagrams, proper wire and connector repair procedures, details of wire harness routing and retention, connector pin-out information and location views for the various wire harness connectors, splices and grounds.

WARNING: ON VEHICLES EQUIPPED WITH AIRBAGS, DISABLE THE AIRBAG SYSTEM BEFORE ATTEMPTING ANY STEERING WHEEL, STEERING COLUMN, OR INSTRUMENT PANEL COMPONENT DIAGNOSIS OR SERVICE. DISCONNECT AND ISOLATE THE BATTERY NEGATIVE (GROUND) CABLE, THEN WAIT TWO MINUTES FOR THE AIRBAG SYSTEM CAPACITOR TO DISCHARGE BEFORE PERFORMING FURTHER DIAGNOSIS OR SERVICE. THIS IS THE ONLY SURE WAY TO DISABLE THE AIRBAG SYSTEM. FAILURE TO TAKE THE PROPER PRECAUTIONS COULD RESULT IN ACCIDENTAL AIRBAG DEPLOYMENT AND POSSIBLE PERSONAL INJURY.

(1) Turn the ignition switch to the On position. Actuate the turn signal switch or the hazard warning switch. Observe the turn signal indicator lamp(s) in the instrument cluster. If the flash rate is very high, check for a turn signal bulb that is not lit or is very dimly lit. Repair the circuits to that lamp or replace the faulty bulb, as required. If the turn signal indicator(s) fail to light, go to Step 2.

(2) Turn the ignition switch to the Off position. Check the ignition run fuse (Fuse 20 - 10 ampere) and the flasher fuse (Fuse 4 - 15 ampere) in the

LAMPS/LIGHTING - EXTERIOR (Continued)

Junction Block (JB). If OK, go to Step 3. If not OK, repair the shorted circuit or component as required and replace the faulty fuse(s).

(3) Check for battery voltage at the flasher fuse (Fuse 4 - 15 ampere) in the JB. If OK, go to Step 4. If not OK, repair the open fused B(+) circuit between the JB and the Power Distribution Center (PDC) as required.

(4) Turn the ignition switch to the On position. Check for battery voltage at the ignition run fuse (Fuse 20 - 10 ampere) in the JB. If OK, go to Step 5. If not OK, repair the open fused ignition switch output (run) circuit between the JB and the ignition switch as required.

(5) Turn the ignition switch to the Off position. Disconnect and isolate the battery negative cable. Remove the combination flasher from the JB and replace it with a known good unit. Reconnect the battery negative cable. Test the operation of the turn signal and hazard warning systems. If OK, discard the faulty combination flasher. If not OK, remove the test flasher and go to Step 6.

(6) Turn the ignition switch to the On position. Check for battery voltage at the fused ignition switch output (run) circuit cavity in the JB receptacle for the combination flasher. If OK, go to Step 7. If not OK, repair the open fused ignition switch output (run) circuit between the combination flasher and the ignition run fuse (Fuse 20 - 10 ampere) in the JB as required.

(7) Turn the ignition switch to the Off position. Check for battery voltage at the fused B(+) circuit cavity of the JB receptacle for the combination flasher. If OK, go to Step 8. If not OK, repair the open fused B(+) circuit between the combination flasher and the flasher fuse (Fuse 4 - 15 ampere) in the JB as required.

(8) Disconnect and isolate the battery negative cable. Disconnect the instrument panel wire harness connector for the turn signal and hazard warning switches from the left (lighting) multi-function switch connector receptacle. Check for continuity between the ground circuit cavity of the instrument panel wire harness connector for the left multi-function switch and a good ground. There should be continuity. If OK, go to Step 9. If not OK, repair the open ground circuit to ground (G200) as required.

(9) Check for continuity between the hazard switch sense circuit cavity of the instrument panel wire harness connector for the left multi-function switch and a good ground. There should be no continuity. If OK, go to Step 10. If not OK, repair the shorted hazard switch sense circuit between the left multi-function switch and the combination flasher as required.

(10) Check for continuity between the hazard switch sense circuit cavities of the JB receptacle for the combination flasher and the instrument panel wire harness connector for the left multi-function switch. There should be continuity. If OK, go to Step 11. If not OK, repair the open hazard switch sense circuit between the left multi-function switch and the combination flasher as required.

(11) Check for continuity between the left turn switch sense circuit cavity of the instrument panel wire harness connector for the left multi-function switch and a good ground. There should be no continuity. If OK, go to Step 12. If not OK, repair the shorted left turn switch sense circuit between the left multi-function switch and the combination flasher as required.

(12) Check for continuity between the left turn switch sense circuit cavities of the JB receptacle for the combination flasher and the instrument panel wire harness connector for the left multi-function switch. There should be continuity. If OK, go to Step 13. If not OK, repair the open left turn switch sense circuit between the left multi-function switch and the combination flasher as required.

(13) Check for continuity between the right turn switch sense circuit cavity of the instrument panel wire harness connector for the left multi-function switch and a good ground. There should be no continuity. If OK, go to Step 14. If not OK, repair the shorted right turn switch sense circuit between the left multi-function switch and the combination flasher as required.

(14) Check for continuity between the right turn switch sense circuit cavities of the JB receptacle for the combination flasher and the instrument panel wire harness connector for the left multi-function switch. There should be continuity. If OK, test the left multi-function switch. (Refer to 8 - ELECTRICAL/LAMPS/LIGHTING - EXTERIOR/LEFT MULTI-FUNCTION SWITCH - DIAGNOSIS AND TESTING). If not OK, repair the open right turn switch sense circuit between the left multi-function switch and the combination flasher as required.

SPECIFICATIONS

EXTERIOR LAMPS

CAUTION: Do not use bulbs other than the bulbs listed in the Bulb Application Table. Damage to lamp can result. Do not touch halogen bulbs with fingers or other oily surfaces. Bulb life will be reduced.

LAMP	BULB TYPE
BACK-UP	3157
CENTER HIGH MOUNTED STOP LAMP	921
FOG LAMP	9005
FRONT SIDE MARKER	194/194NA
FRONT TURN SIGNAL	3157/3157NA
HIGH BEAM	9005XS
LOW BEAM	9006XS
LICENSE PLATE	168
TAIL/BRAKE	3157
REAR TURN SIGNAL	3157
UNDERHOOD LAMP	561

AUTO HEADLAMP SENSOR

DIAGNOSIS AND TESTING - AUTO HEADLAMP SENSOR (AHL)

The auto headlamp sensor is the key sensor for the auto headlamp system. The sensor needs real sunlight to properly register the light level. When auto headlamps are enabled indoors, the headlamps may be turned on. The sensor is located in the center of the defroster grille at the base of the windshield. There are no faults set in the Body Control Module (BCM) for a bad or missing AHL Sensor. Symptom of a missing sensor or unconnected sensor would be that the Headlamps and Parklamps turn on when the vehicle is started and there is a high level of ambient light present (ie. daytime). Auto headlamps should not function in the presence of daylight.

REMOVAL

(1) Remove instrument panel top cover. (Refer to 23 - BODY/INSTRUMENT PANEL/INSTRUMENT PANEL TOP COVER - REMOVAL) for service procedures.

(2) Remove screw attaching auto headlamp sensor to instrument panel (Fig. 1).

(3) Disengage harness connector from auto headlamp sensor.

(4) Separate auto headlamp sensor from instrument panel.

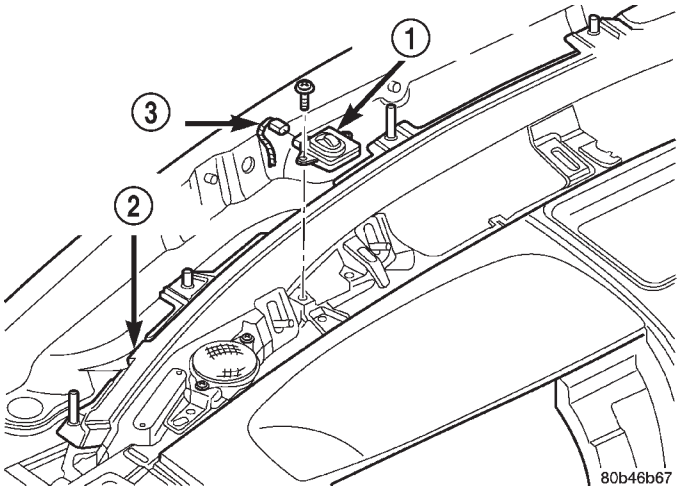

Fig. 1 Auto Headlamp Sensor

1 - AUTO HEADLAMP SENSOR
2 - I/P ASSEMBLY
3 - CONNECTOR

INSTALLATION

(1) Position auto headlamp sensor on instrument panel.

(2) Engage harness connector to auto headlamp sensor.

(3) Install screw attaching auto headlamp sensor to instrument panel.

(4) Install instrument panel top cover. (Refer to 23 - BODY/INSTRUMENT PANEL/INSTRUMENT PANEL TOP COVER - INSTALLATION) for service procedures.

BRAKE LAMP SWITCH

DESCRIPTION

The plunger type brake lamp switch is mounted on a bracket attached to the brake pedal support. The switch can be adjusted when necessary.

OPERATION

The brake lamp switch is used for the brake lamp, speed control and brake sensor circuits.

DIAGNOSIS AND TESTING

Brake lamp switch operation can be tested with an ohmmeter. The ohmmeter is used to check continuity between the pin terminals at different plunger positions (Fig. 2).

BRAKE LAMP SWITCH (Continued)

SWITCH CIRCUIT IDENTIFICATION

- Terminals 1 and 2: brake sensor circuit
- Terminals 3 and 4: speed control circuit
- Terminals 5 and 6: brake lamp circuit

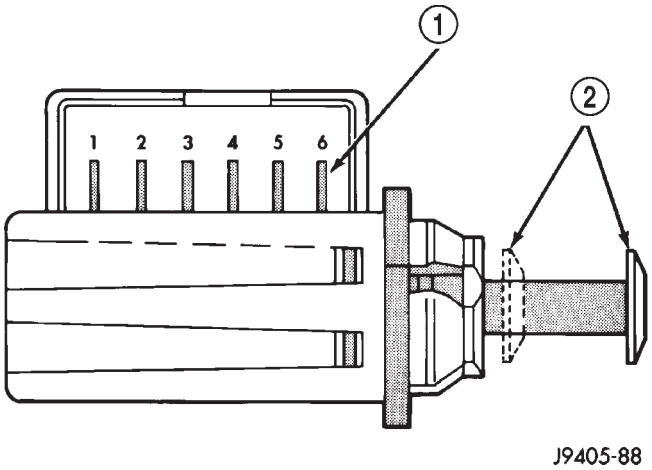

Fig. 2 Brake Lamp Switch Terminal Identification

1 - TERMINAL PINS
2 - PLUNGER TEST POSITIONS

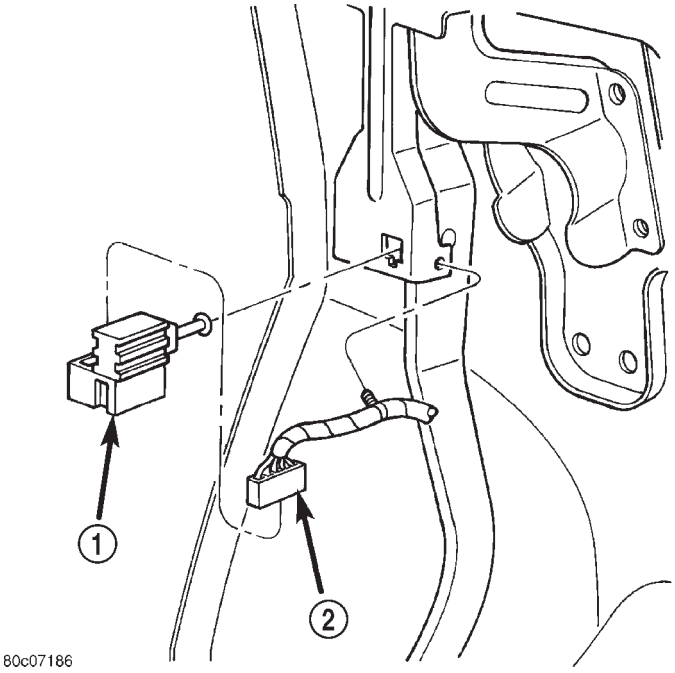

Fig. 3 Brake Lamp

1 - SWITCH
2 - HARNESS CONNECTOR

SWITCH CONTINUITY TEST

NOTE: Disconnect switch harness before testing continuity.

With the switch plunger retracted, attach test leads to terminal pins 1 and 2. Replace switch if meter indicates no continuity.

With the switch plunger retracted, attach test leads to terminal pins 3 and 4. Replace switch if meter indicates no continuity.

With the switch plunger extended, attach test leads to terminal pins 5 and 6. Replace switch if meter indicates no continuity.

REMOVAL

(1) Remove steering column cover and lower trim panel for switch access (if necessary).

(2) Press brake pedal downward to fully applied position.

(3) Rotate switch approximately 30° in counter-clockwise direction to unlock switch retainer. Then pull switch rearward and out of bracket.

(4) Disconnect switch harness and remove switch from vehicle (Fig. 3).

INSTALLATION

(1) Pull switch plunger all the way out to fully extended position.

(2) Connect harness wires to switch.

(3) Press and hold brake pedal in applied position.

(4) Install switch as follows: Align tab on switch with notch in switch bracket. Then insert switch in bracket and turn it clockwise about 30° to lock it in place.

(5) Release brake pedal. Then pull pedal lightly rearward. Pedal will set plunger to correct position as pedal pushes plunger into switch body. Switch will make ratcheting sound as it self adjusts.

CAUTION: Booster damage may occur if the pedal pull exceeds 20 lbs.

ADJUSTMENT

(1) Press and hold brake pedal in applied position.

(2) Pull switch plunger all the way out to fully extended position.

(3) Release brake pedal. Then pull pedal lightly rearward. Pedal will set plunger to correct position as pedal pushes plunger into switch body. Switch will make ratcheting sound as it self adjusts.

CAUTION: Booster damage may occur if the pedal pull exceeds 20 lbs.

CENTER HIGH MOUNTED STOP LAMP

REMOVAL - BULB

(1) Remove screws attaching lamp housing to lift-gate.

CENTER HIGH MOUNTED STOP LAMP (Continued)

(2) Rotate bulb socket 1/4 turn and pull from housing (Fig. 4).
(3) Grasp bulb and pull from socket.

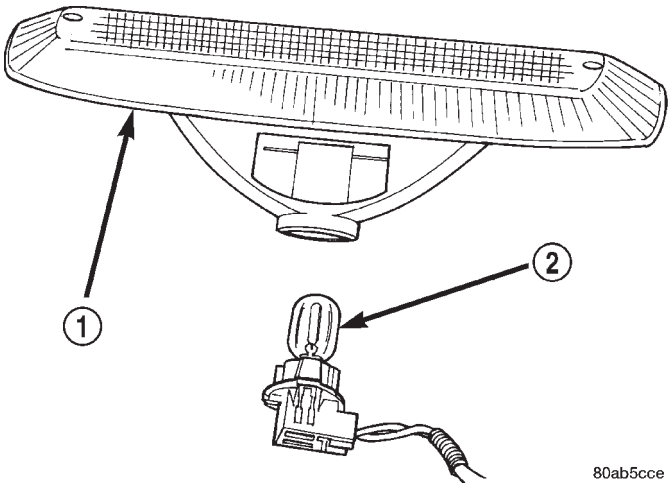

Fig. 4 CHMSL Bulb

1 - CHMSL
2 - CHMSL BULB

REMOVAL - CHMSL

(1) Remove screws attaching CHMSL to liftgate (Fig. 5).
(2) Disconnect wire harness connector.
(3) Separate CHMSL from vehicle.

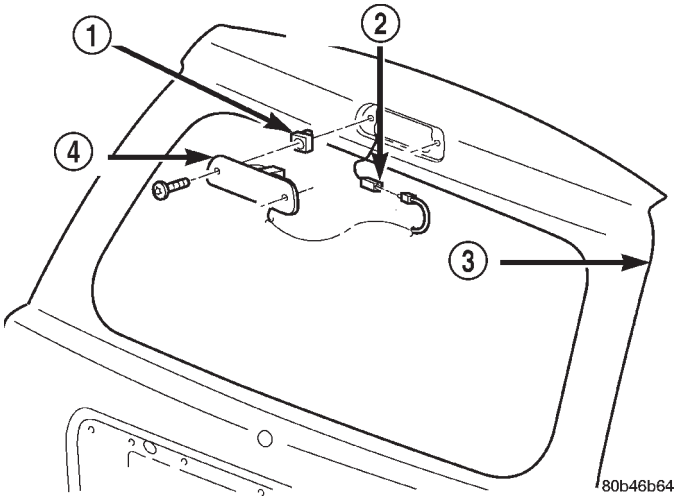

Fig. 5 Center High Mounted Stop lamp

1 - PUSH-IN NUT
2 - CONNECTOR
3 - LIFTGATE
4 - CHSML

INSTALLATION - BULB

(1) Push bulb into socket.
(2) Position socket in lamp and rotate 1/4 turn.
(3) Install screws attaching the lamp housing to liftgate.

INSTALLATION - CHMSL

(1) Connect wire harness connector.
(2) Position CHMSL on liftgate.
(3) Install screws attaching CHMSL to liftgate.

COMBINATION FLASHER

DESCRIPTION

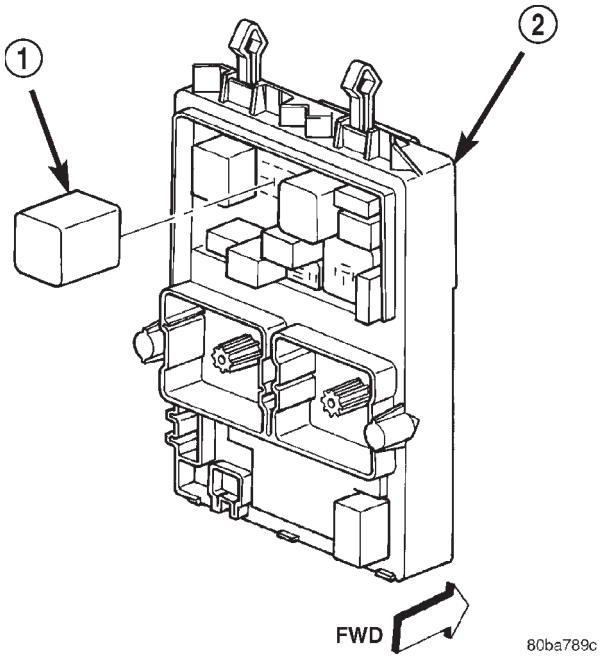

Fig. 6 Combination Flasher

1 - COMBINATION FLASHER
2 - JUNCTION BLOCK

The combination flasher is located in a receptacle of the Junction Block (JB) (Fig. 6). The JB is located underneath the driver side end of the instrument panel outboard of the steering column opening. The combination flasher is a smart relay that functions as both the turn signal system and the hazard warning system flasher. The combination flasher contains active electronic Integrated Circuitry (IC) elements. This flasher is designed to handle the current flow requirements of the factory-installed lighting. If supplemental lighting is added to the turn signal lamp circuits, such as when towing a trailer with lights, the combination flasher will automatically try to compensate to keep the flash rate the same.

COMBINATION FLASHER (Continued)

The combination flasher has nine blade-type terminals that connect it to the vehicle electrical system through nine matching cavities in the receptacle of the JB. Refer to the appropriate wiring information. The wiring information includes wiring diagrams, proper wire and connector repair procedures, details of wire harness routing and retention, connector pin-out information and location views for the various wire harness connectors, splices and grounds.

Because of the active electronic elements within the combination flasher, it cannot be tested with conventional automotive electrical test equipment. If the combination flasher is believed to be faulty, test the turn signal system and hazard warning system circuits.(Refer to 8 - ELECTRICAL/LAMPS/LIGHTING - EXTERIOR - DIAGNOSIS AND TESTING - TURN SIGNAL & HAZARD WARNING SYSTEM). The combination flasher cannot be repaired or adjusted and, if faulty or damaged, it must be replaced.

OPERATION

The combination flasher has nine blade-type terminals intended for the following inputs and outputs: fused B(+), fused ignition switch output, left turn switch sense, right turn switch sense, hazard switch sense, left front turn signal circuit, right front turn signal circuit, left rear turn signal circuit and right rear turn signal circuit. Constant battery voltage is supplied to the flasher so that it can perform the hazard warning function, and ignition switched battery voltage is supplied for the turn signal function. However, when the flasher is idle no current is drawn through the module. The unit does not become active until it is provided a signal ground from the turn signal switch, hazard warning switch or the Body Control Module (BCM).

The IC within the combination flasher (Fig. 7) contains the logic that controls the flasher operation and the flash rate. Typical flash rate is about ninety flashes per minute. When a bulb is burnt out, or when a circuit for a lamp is open, the turn signal flash rate will increase to a minimum of 180 flashes per minute. However, an open lamp circuit or burnt out bulb does not change the hazard warning flash rate.

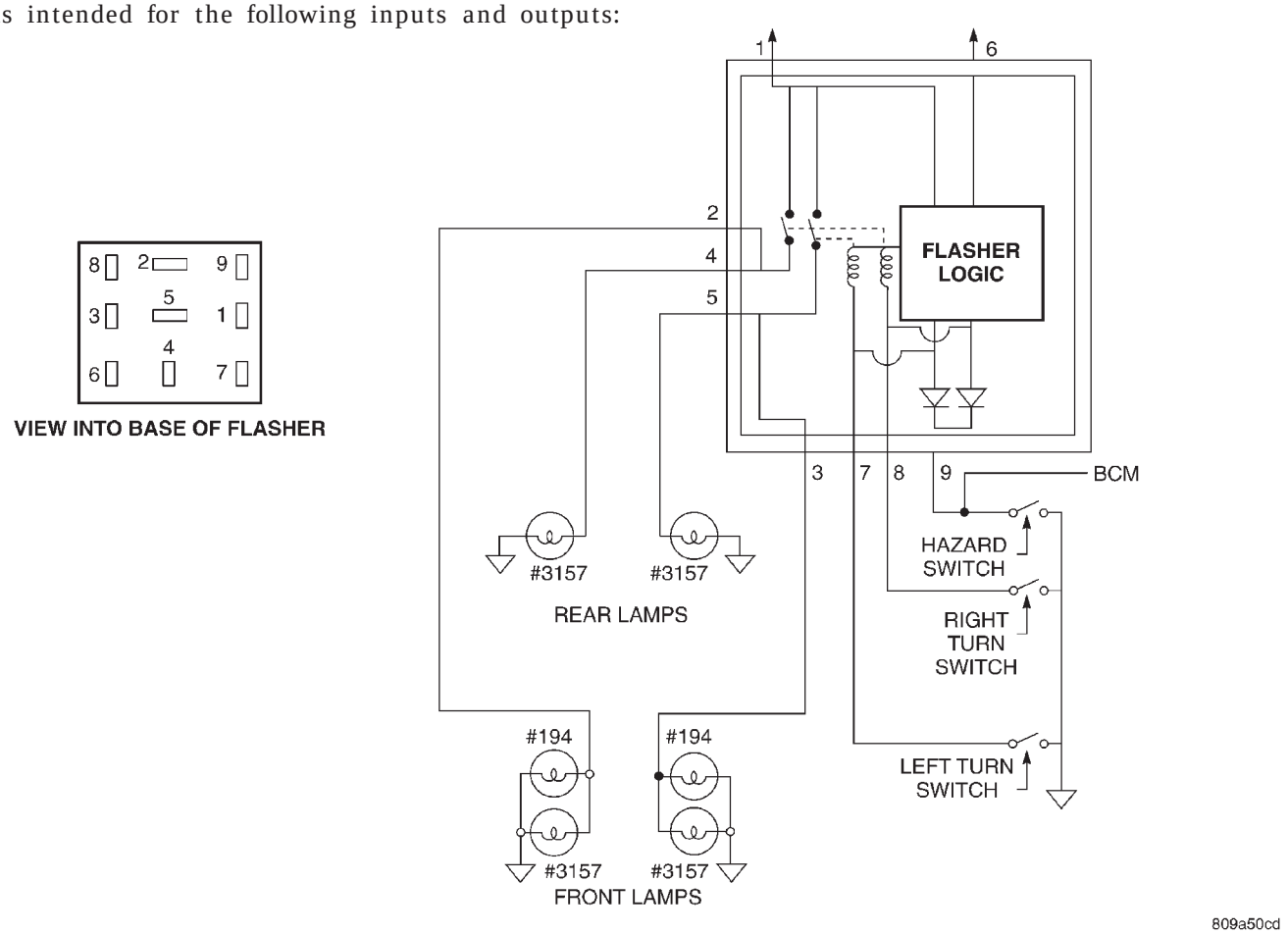

Fig. 7 Combination Flasher

COMBINATION FLASHER (Continued)

COMBINATION FLASHER CIRCUITS		
CAVITY	CIRCUIT	FUNCTION
1	L25	Fused B(+)
2	L61	Left Front Turn Signal
3	L60	Right Front Turn Signal
4	L63	Left Rear Turn Signal
5	L62	Right Rear Turn Signal
6	F22	Fused Ignition Switch Output
7	L305	Left Turn Switch Sense
8	L302	Right Turn Switch Sense
9	L91	Hazard Switch Sense

Turn signal inputs that actuate the combination flasher are low current grounds, each drawing a maximum of 300 milliamperes. The turn signal inputs are provided to the flasher through the Junction Block (JB) by the turn signal (left multi-function) switch on the steering column. The hazard warning signal input is a low current ground drawing a maximum of 600 milliamperes. The hazard warning input can be provided through the JB by the hazard warning (left multi-function) switch on the steering column, or by the BCM on the back of the JB.

REMOVAL

WARNING: ON VEHICLES EQUIPPED WITH AIRBAGS, DISABLE THE AIRBAG SYSTEM BEFORE ATTEMPTING ANY STEERING WHEEL, STEERING COLUMN, OR INSTRUMENT PANEL COMPONENT DIAGNOSIS OR SERVICE. DISCONNECT AND ISOLATE THE BATTERY NEGATIVE (GROUND) CABLE, THEN WAIT TWO MINUTES FOR THE AIRBAG SYSTEM CAPACITOR TO DISCHARGE BEFORE PERFORMING FURTHER DIAGNOSIS OR SERVICE. THIS IS THE ONLY SURE WAY TO DISABLE THE AIRBAG SYSTEM. FAILURE TO TAKE THE PROPER PRECAUTIONS COULD RESULT IN ACCIDENTAL AIRBAG DEPLOYMENT AND POSSIBLE PERSONAL INJURY.

(1) Disconnect and isolate the battery negative cable.

(2) Remove the steering column opening cover from the instrument panel. (Refer to 23 - BODY/INSTRUMENT PANEL/STEERING COLUMN OPENING COVER - REMOVAL).

(3) Remove the combination flasher from the Junction Block (JB) (Fig. 8).

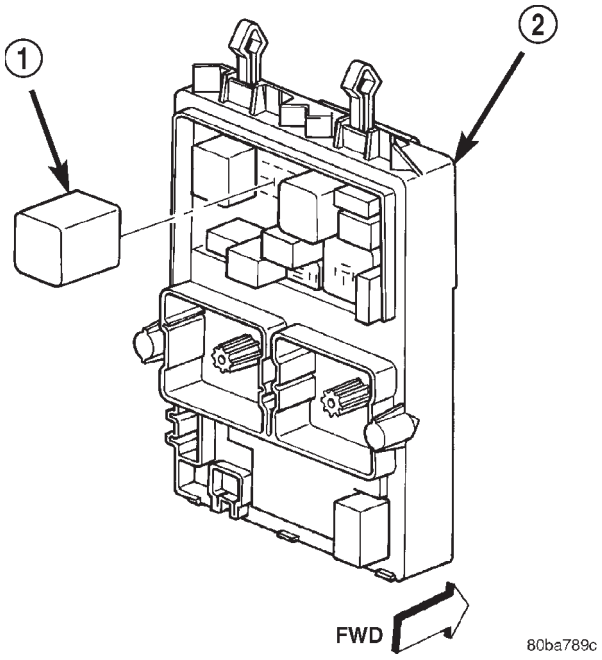

Fig. 8 Combination Flasher

1 - COMBINATION FLASHER
2 - JUNCTION BLOCK

COMBINATION FLASHER (Continued)

INSTALLATION

WARNING: ON VEHICLES EQUIPPED WITH AIRBAGS, DISABLE THE AIRBAG SYSTEM BEFORE ATTEMPTING ANY STEERING WHEEL, STEERING COLUMN, OR INSTRUMENT PANEL COMPONENT DIAGNOSIS OR SERVICE. DISCONNECT AND ISOLATE THE BATTERY NEGATIVE (GROUND) CABLE, THEN WAIT TWO MINUTES FOR THE AIRBAG SYSTEM CAPACITOR TO DISCHARGE BEFORE PERFORMING FURTHER DIAGNOSIS OR SERVICE. THIS IS THE ONLY SURE WAY TO DISABLE THE AIRBAG SYSTEM. FAILURE TO TAKE THE PROPER PRECAUTIONS COULD RESULT IN ACCIDENTAL AIRBAG DEPLOYMENT AND POSSIBLE PERSONAL INJURY.

(1) Position the combination flasher in the proper receptacle of the Junction Block (JB) (Fig. 9).

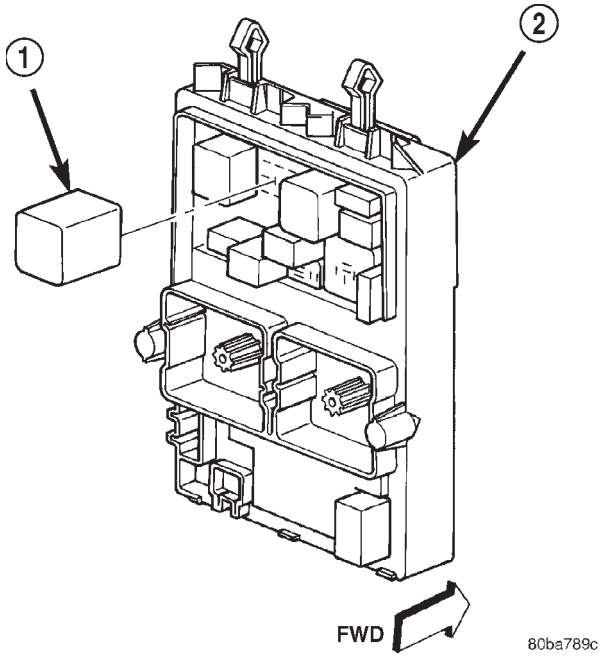

Fig. 9 Combination Flasher

1 - COMBINATION FLASHER
2 - JUNCTION BLOCK

(2) Align the terminals of the combination flasher with the terminal cavities in the JB receptacle for the flasher.

(3) Push in firmly and evenly on the combination flasher until the terminals are fully seated in the terminal cavities of the JB receptacle for the flasher.

(4) Reinstall the steering column opening cover onto the instrument panel. (Refer to 23 - BODY/INSTRUMENT PANEL/STEERING COLUMN OPENING COVER - INSTALLATION).

(5) Reconnect the battery negative cable.

DAYTIME RUNNING LAMP MODULE

DESCRIPTION

The Daytime Running Lights (Headlamps) System is installed on vehicles manufactured for sale in Canada only. A separate module, mounted in the junction block under the dash, controls the DRL.

OPERATION

The headlamps are illuminated when the engine is running, headlamp switch off, and the parking brake released. The lamps are illuminated at a reduced intensity.

REMOVAL

(1) Lower the junction block to access the daytime running lamp module. (Refer to 8 - ELECTRICAL/POWER DISTRIBUTION/JUNCTION BLOCK - REMOVAL) for service procedures.

(2) Pull the module from the junction block.

INSTALLATION

(1) Position the module in the junction block and press to secure.

(2) Install the junction block. (Refer to 8 - ELECTRICAL/POWER DISTRIBUTION/JUNCTION BLOCK - INSTALLATION) for service procedures.

FOG LAMP

REMOVAL

(1) Disconnect fog lamp harness connector.
(2) Rotate bulb socket 1/4 turn counter clockwise.
(3) Remove bulb socket from lamp (Fig. 10).

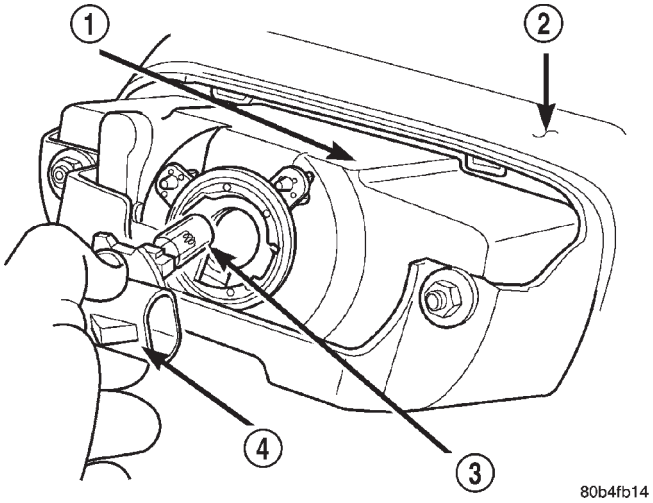

Fig. 10 Fog Lamp Bulb

1 - FOG LAMP
2 - FASCIA
3 - BULB
4 - BULB SOCKET

INSTALLATION

CAUTION: Do not touch the bulb glass with fingers or other oily surfaces. Reduced bulb life will result.

(1) Position bulb socket in fog lamp.
(2) Rotate bulb socket 1/4 turn clockwise.
(3) Connect fog lamp harness connector.

FOG LAMP UNIT

REMOVAL

(1) Disengage fog lamp electrical connector.
(2) Remove nuts attaching fog lamp to fascia (Fig. 11).
(3) Separate fog lamp from vehicle.

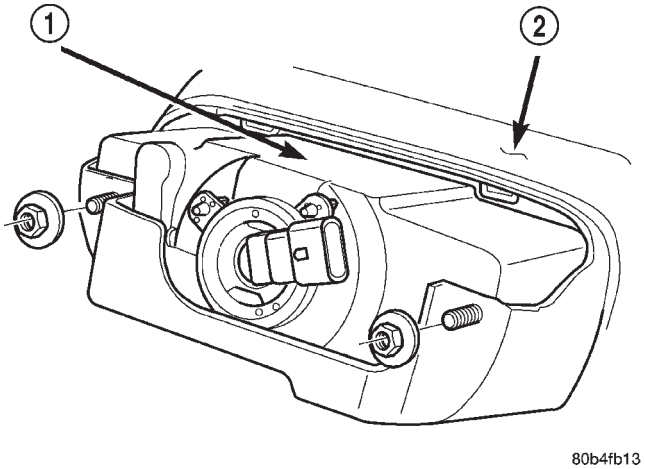

Fig. 11 Fog Lamp

1 - FOG LAMP
2 - FASCIA

INSTALLATION

(1) Position fog lamp in fascia.
(2) Install nuts attaching fog lamp to fascia.
(3) Engage fog lamp electrical connector.
(4) Align fog lamp, if necessary.

FOG LAMP ADJUSTMENT

Prepare an alignment screen. A properly aligned fog lamp will project a pattern on the alignment screen 100 mm (4 in.) below the fog lamp centerline and straight ahead (Fig. 12).

Rotate the adjustment screw to adjust beam height (Fig. 13).

FOG LAMP UNIT (Continued)

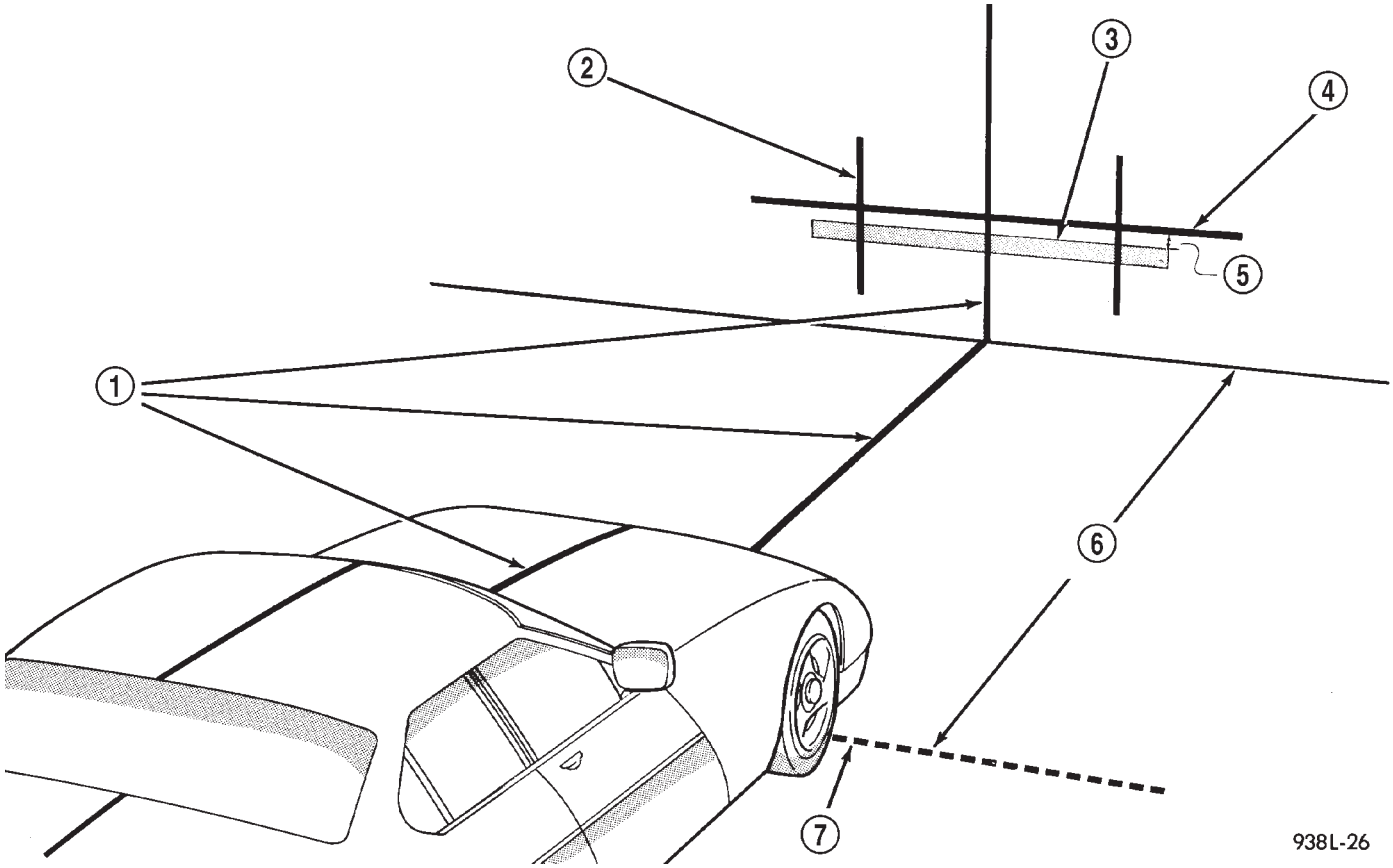

Fig. 12 Fog Lamp Alignment—Typical

1 - VEHICLE CENTERLINE
2 - CENTER OF VEHICLE TO CENTER OF FOG LAMP LENS
3 - HIGH-INTENSITY AREA
4 - FLOOR TO CENTER OF FOG LAMP LENS
5 - 100 mm (4 in.)
6 - 7.62 METERS (25 FEET)
7 - FRONT OF FOG LAMP

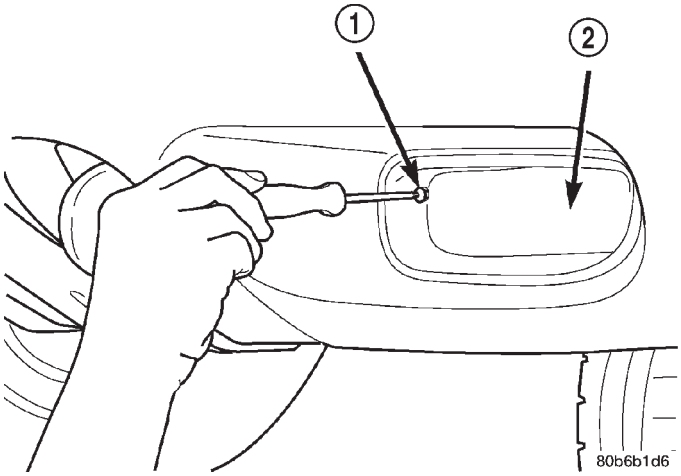

Fig. 13 Fog Lamp Adjustment

1 - ADJUSTMENT SCREW
2 - FOG LAMP

HEADLAMP

DESCRIPTION

Headlamps on the Grand Cherokee are modular in design. The turn/park lamp module is incorporated into the headlamp module. The module contains five bulbs; a dual filament headlamp low beam bulb, a single filament high beam bulb, two turnsignal/park bulbs, and a side marker bulb.

OPERATION

All headlamp, turnsignal, park lamp, and high beam operations are controlled by the multifunction switch located on the left side of the steering column. Exterior lamps and bulbs are serviceable separately.

HEADLAMP (Continued)

DIAGNOSIS AND TESTING

HEADLAMPS

CONDITION	POSSIBLE CAUSES	CORRECTION
HEADLAMPS ARE DIM WITH ENGINE IDLING OR IGNITION TURNED OFF	1. Loose or corroded battery cables.	1. Clean and secure battery cable clamps and posts.
	2. Loose or worn generator drive belt.	2. Adjust or replace generator drive belt.
	3. Charging system output too low.	3. Test and repair charging system, refer to Electrical, Charging
	4. Battery has insufficient charge.	4. Test battery state-of -charge, refer to Electrical, Battery System.
	5. Battery is sulfated or shorted.	5. Load test battery, refer to Electrical,Battery System.
	6. Poor lighting circuit Z1-ground.	6. Test for voltage drop across Z1-ground locations, refer to Electrical, Wiring Digram Information.
	7. Both headlamp bulbs defective.	7. Replace both headlamp bulbs.
HEADLAMP BULBS BURN OUT FREQUENTLY	1. Charging system output too high.	1. Test and repair charging system, refer to Electrical, Charging.
	2. Loose or corroded terminals or splices in circuit.	2. Inspect and repair all connectors and splices, refer to Electrical, Wiring Information.
HEADLAMPS ARE DIM WITH ENGINE RUNNING ABOVE IDLE*	1. Charging system output too low.	1. Test and repair charging system, refer to Electrical, Wiring Information.
	2. Poor lighting circuit Z1-ground.	2. Test for voltage drop across Z1-ground locations, refer to Electrical, Wiring Information.
	3. High resistance in headlamp circuit.	3. Test amperage draw of headlamp circuit.
	4. Both headlamp bulbs defective.	4. Replace both headlamp bulbs.
HEADLAMPS FLASH RANDOMLY	1. Poor lighting circuit Z1-ground.	1. Test for voltage drop across Z1-ground locations, refer to Electrical, Wiring Information.
	2. High resistance in headlamp circuit.	2. Test amperage draw of headlamp circuit. Should not exceed 30 amps.
	3. Loose or corroded terminals or splices in circuit.	3. Inspect and repair all connectors and splices, refer to Electrical, Wiring Information.

HEADLAMP (Continued)

CONDITION	POSSIBLE CAUSES	CORRECTION
HEADLAMPS DO NOT ILLUMINATE	1. No voltage to headlamps.	1. Repair open headlamp circuit, refer to Electrical, Wiring Information.
	2. No Z1-ground at headlamps.	2. Repair circuit ground, refer to Electrical, Wiring Information.
	3. Faulty headlamp switch.	3. Refer to BCM diagnostics.
	4. Blown fuse for headlamps.	4. Replace fuse refer to Electrical, Wiring Information.
	5. Broken connector terminal or wire splice in headlamp circuit.	5. Repair connector terminal or wire splice.
	6. Both headlamp bulbs defective.	6. Replace both headlamp bulbs.
*Canada vehicles must have lamps ON.		

FOG LAMP

CONDITION	POSSIBLE CAUSES	CORRECTION
FOG LAMPS ARE DIM WITH ENGINE IDLING OR IGNITION TURNED OFF.	1. Loose or corroded battery cables.	1. Clean and secure battery cable clamps and posts.
	2. Loose or worn generator drive belt.	2. Adjust or replace generator drive belt.
	3. Charging system output too low.	3. Test and repair charging system. Refer to Electrical, Charging,
	4. Battery has insufficient charge.	4. Test battery state-of -charge. Refer to Electrical, Battery System.
	5. Battery is sulfated or shorted.	5. Load test battery. Refer to Electrical, Battery System.
	6. Poor lighting circuit Z1-ground.	6. Test for voltage drop across Z1-ground locations. Refer to Electrical, Wiring Information.
FOG LAMP BULBS BURN OUT FREQUENTLY	1. Charging system output too high.	1. Test and repair charging system. Refer to Electrical, Charging.
	2. Loose or corroded terminals or splices in circuit.	2. Inspect and repair all connectors and splices. Refer to Electrical, Wiring Information.
FOG LAMPS ARE DIM WITH ENGINE RUNNING ABOVE IDLE	1. Charging system output too low.	1. Test and repair charging system. Refer to Electrical, Charging.
	2. Poor lighting circuit Z1-ground.	2. Test for voltage drop across Z1-ground locations. Refer to Electrical, Wiring Information.
	3. High resistance in fog lamp circuit.	3. Test amperage draw of fog lamp circuit.

HEADLAMP (Continued)

CONDITION	POSSIBLE CAUSES	CORRECTION
FOG LAMPS FLASH RANDOMLY	1. Poor lighting circuit Z1-ground.	1. Test for voltage drop across Z1-ground locations. Refer to Electrical, Wiring Information.
	2. High resistance in fog lamp circuit.	2. Test amperage draw of fog lamp circuit.
	3. Faulty multifunction switch.	3. Refer to Electrical, Electronic Control Modules.
	4. Loose or corroded terminals or splices in circuit.	4. Inspect and repair all connectors and splices. Refer to Electrical, Wiring Information.
FOG LAMPS DO NOT ILLUMINATE	1. Blown fuse for fog lamp.	1. Replace fuse. Refer to Electrical, Wiring Information.
	2. No Z1-ground at fog lamps.	2. Repair circuit ground. Refer to Electrical, Wiring Information.
	3. Faulty multifunction switch.	3. Refer to Electrical, Wiring Information.
	4. Broken connector terminal or wire splice in fog lamp circuit.	4. Repair connector terminal or wire splice.
	5. Defective or burned out bulb.	5. Replace bulb.

DAYTIME RUNNING LAMP

CONDITION	POSSIBLE CAUSES	CORRECTION
DAYTIME RUNNING LAMPS DO NOT WORK	1. Poor connection at DRL module.	1. Secure connector on DRL module.
	2. Parking brake engaged.	2. Disengage parking brake.
	3. Parking brake circuit shorted to ground.	3. Check cluster telltale, refer to Group 8W.
	4. Headlamp circuit shorted to ground.	4. Refer to Group 8W.
	5. Defective DRL relay.	5. Replace DRL relay.
	6. Body controller not programed with Canadian country code.	6. Check country code.
	7. DRL relay is missing.	7. Install DRL relay.
	8. Blown fuse for DRL.	8. Replace fuse refer to Electrical, Wiring Information.
Clicking or chattering when DRL is on.	1. Mechanical relay is installed in the junction block.	1. Ensure that the DRL relay is installed in the proper socket in junction block, and that no mechanical relay exists in the low beam socket.

HEADLAMP (Continued)

DIAGNOSIS AND TESTING PROCEDURES

WARNING: EYE PROTECTION SHOULD BE USED WHEN SERVICING GLASS COMPONENTS. PERSONAL INJURY CAN RESULT.

CAUTION: Do not touch the glass of halogen bulbs with fingers or other possibly oily surface, reduced bulb life will result. Do not use bulbs other than those indicated in the Bulb Application table. Damage to lamp and/or Daytime Running Lamp Module can result. Do not use fuses, circuit breakers or relays having greater amperage value than indicated on the fuse panel or in the Owners Manual.

When a vehicle experiences problems with the headlamp system, verify the condition of the battery connections, fuses, charging system, headlamp bulbs, wire connectors, relay, high beam switch, dimmer switch, and headlamp switch. Refer to the appropriate wiring information. The wiring information includes wiring diagrams, proper wire and connector repair procedures, details of wire harness routing and retention, connector pin-out information and location views for the various wire harness connectors, splices and grounds.

Each vehicle is equipped with various lamp assemblies. A good ground is necessary for proper lighting operation. Grounding is provided by the lamp socket when it comes in contact with the metal body, or through a separate ground wire.

When changing lamp bulbs check the socket for corrosion. If corrosion is present, clean it with a wire brush and coat the inside of the socket lightly with Mopar Multi-Purpose Grease or equivalent.

When it is necessary to remove components to service another, it should not be necessary to apply excessive force or bend a component to remove it. Before damaging a trim component, verify hidden fasteners or captured edges are not holding the component in place.

REMOVAL - BULB

(1) Remove headlamp.

(2) Turn bulb socket one quarter turn counter clockwise.

(3) Remove socket from lamp (Fig. 14).

(4) Pull bulb from socket.

INSTALLATION - BULB

CAUTION: Do not touch the bulb glass with fingers or other oily surfaces. Reduced bulb life will result.

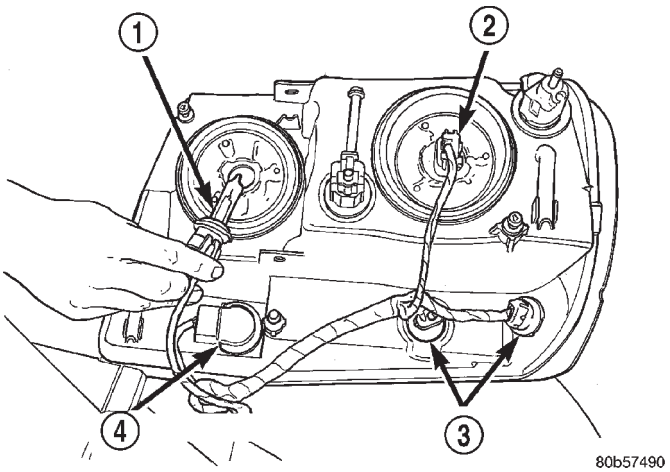

Fig. 14 Headlamp Bulb

1 - HIGH BEAM BULB
2 - LOW BEAM BULB
3 - MARKER BULB
4 - PARK/TURN SIGNAL BULB

(1) Position bulb into socket and push into place.

(2) Position bulb socket in headlamp and turn bulb socket one quarter turn clockwise.

(3) Install headlamp.

HEADLAMP SWITCH

DESCRIPTION

The headlamp switch is integral to the exterior lighting switch, which is part of the left (lighting) multi-function switch unit located on the left side of the steering column. A knob on the end of the left multi-function switch control stalk controls all of the exterior lighting switch functions. The exterior lighting switch is hard wired to the Body Control Module (BCM) through the instrument panel wire harness.

The exterior lighting switch cannot be adjusted or repaired and, if faulty or damaged, the entire left multi-function switch unit must be replaced. (Refer to 8 - ELECTRICAL/LAMPS/LIGHTING - EXTERIOR/TURN SIGNAL/HAZARD SWITCH - REMOVAL) for the service procedures. (Refer to 8 - ELECTRICAL/ELECTRONIC CONTROL MODULES/BODY CONTROL/CENTRAL TIMER MODUL - DESCRIPTION) for more information on this component. For complete circuit diagrams, refer to the appropriate wiring information. The wiring information includes wiring diagrams, proper wire and connector repair procedures, details of wire harness routing and retention, connector pin-out information and location views for the various wire harness connectors, splices and grounds.

HEADLAMP SWITCH (Continued)

OPERATION

The exterior lighting switch uses a hard wired five volt reference circuit from the BCM, resistor multiplexing and a hard wired switch output circuit in the instrument panel wire harness to provide the BCM with a zero to five volt signal that indicates the status of all of the exterior lighting switch settings. The BCM then uses control outputs to energize the headlamp and park lamp relays that activate the exterior lighting circuits.

The BCM monitors the exterior lighting switch status, then sends the proper switch status messages to other electronic modules over the Programmable Communications Interface (PCI) data bus network. The exterior lighting switch status is also used by the BCM as an input for chime warning system operation.

DIAGNOSIS AND TESTING

Before testing the headlamp switch, turn on the exterior lighting and open the driver side front door. If the exterior lamps of the vehicle operate, but there is no chime warning issued with the driver side front door open, (Refer to 8 - ELECTRICAL/LAMPS/LIGHTING - INTERIOR/DOOR AJAR SWITCH - DIAGNOSIS AND TESTING). If the exterior lamps of the vehicle are inoperative, but the chime warning is issued, (Refer to 8 - ELECTRICAL/LAMPS/LIGHTING - EXTERIOR - DIAGNOSIS AND TESTING).

If the exterior lamps and the chime warning are both inoperative, test the left (lighting) multi-function switch. (Refer to 8 - ELECTRICAL/LAMPS/LIGHTING - EXTERIOR - DIAGNOSIS AND TESTING) to test the left (lighting) multi-function switch. If the left (lighting) multi-function switch tests OK, proceed as follows. The following tests will help to locate a short or open in the hard wired circuits between the left (lighting) multi-function switch and the Body Control Module (BCM). For complete circuit diagrams, refer to the appropriate wiring information. The wiring information includes wiring diagrams, proper wire and connector repair procedures, details of wire harness routing and retention, connector pin-out information and location views for the various wire harness connectors, splices and grounds.

WARNING: ON VEHICLES EQUIPPED WITH AIRBAGS, REFER TO ELECTRICAL, RESTRAINTS BEFORE ATTEMPTING ANY STEERING WHEEL, STEERING COLUMN, OR INSTRUMENT PANEL COMPONENT DIAGNOSIS OR SERVICE. FAILURE TO TAKE THE PROPER PRECAUTIONS COULD RESULT IN ACCIDENTAL AIRBAG DEPLOYMENT AND POSSIBLE PERSONAL INJURY.

(1) Disconnect and isolate the battery negative cable. Disconnect the instrument panel wire harness connector from the left multi-function switch connector receptacle. Disconnect the gray 26-way instrument panel wire harness connector from the Body Control Module (BCM). Check for continuity between the headlamp switch mux circuit cavity of the instrument panel wire harness connector for the left multi-function switch and a good ground. There should be no continuity. If OK, go to Step 2. If not OK, repair the shorted headlamp switch mux circuit as required.

(2) Check for continuity between the headlamp switch mux circuit cavities of the instrument panel wire harness connector for the left multi-function switch and the gray 26-way instrument panel wire harness connector for the BCM. There should be continuity. If OK, go to Step 3. If not OK, repair the open headlamp switch mux circuit as required.

(3) Check for continuity between the headlamp switch return circuit cavity of the instrument panel wire harness connector for the left multi-function switch and a good ground. There should be no continuity. If OK, go to Step 4. If not OK, repair the shorted headlamp switch return circuit as required.

(4) Check for continuity between the headlamp switch return circuit cavities of the instrument panel wire harness connector for the left multi-function switch and the gray 26-way instrument panel wire harness connector for the BCM. There should be continuity. If OK, use a DRB® scan tool and the proper Diagnostic Procedures manual to test the BCM. If not OK, repair the open headlamp switch return circuit as required.

HEADLAMP UNIT

REMOVAL

(1) Remove jack screw attaching top of headlamp to headlamp mounting module (Fig. 15).

(2) Grasp upper inboard and lower outboard corners of headlamp (Fig. 16) and forcefully pull headlamp outward.

(3) Remove all bulb sockets from headlamp module.

(4) Separate headlamp from vehicle.

INSTALLATION

CAUTION: Do not touch the bulb glass with fingers or other oily surfaces. Reduced bulb life will result.

(1) Install all bulb sockets in headlamp module.

HEADLAMP UNIT (Continued)

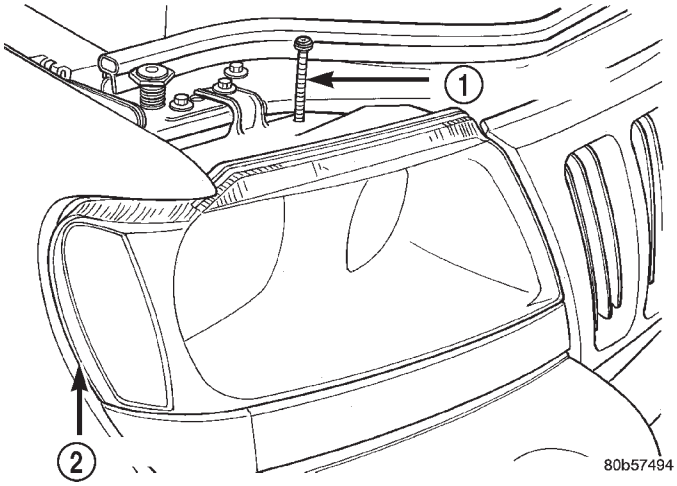

Fig. 15 Headlamp Jackscrew

1 - JACKSCREW
2 - HEADLAMP

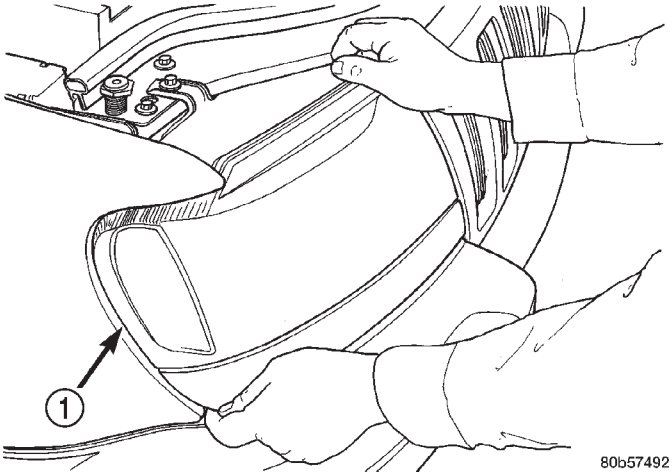

Fig. 16 Headlamp Removal

1 - HEADLAMP

(2) Position headlamp on vehicle and align ball studs with sockets.

(3) Forcefully push headlamp inward to secure ball studs with sockets.

(4) Install jack screw attaching top of headlamp to headlamp mounting module.

ADJUSTMENTS

VEHICLE PREPARATION FOR LAMP ALIGNMENT

(1) Verify headlamp dimmer switch and high beam indicator operation.

(2) Correct defective components that could hinder proper lamp alignment.

(3) Verify proper tire inflation.

(4) Clean lamp lenses.

(5) Verify that luggage area is not heavily loaded.

(6) Fuel tank should be FULL. Add 2.94 kg (6.5 lbs.) of weight over the fuel tank for each estimated gallon of missing fuel.

LAMP ALIGNMENT SCREEN PREPARATION

(1) Position vehicle on a level surface perpendicular to a flat wall 7.62 meters (25 ft) away from front of headlamp lens (Fig. 17).

(2) If necessary, tape a line on the floor 7.62 meters (25 ft) away from and parallel to the wall.

(3) Measure from the floor up 1.27 meters (5 ft) and tape a line on the wall at the centerline of the vehicle. Sight along the centerline of the vehicle (from rear of vehicle forward) to verify accuracy of the line placement.

(4) Rock vehicle side-to-side three times to allow suspension to stabilize.

(5) Jounce front suspension three times by pushing downward on front bumper and releasing.

(6) Measure the distance from the center of headlamp lens to the floor. Transfer measurement to the alignment screen (with tape). Use this line for up/down adjustment reference.

(7) Measure distance from the centerline of the vehicle to the center of each headlamp being aligned. Transfer measurements to screen (with tape) to each side of vehicle centerline. Use these lines for left/right adjustment reference.

HEADLAMP ADJUSTMENT

A properly aimed low beam will project the top edge of the beam intensity pattern on the screen from 25 mm (1 in.) above to 75 mm (3 in.) below headlamp centerline. The side-to-side left edge of the beam intensity pattern should be from 50 mm (2 in.) left to 50 mm (2 in.) right of headlamp centerline (Fig. 18).

(1) Clean front of the headlamps.

(2) Place headlamps on LOW beam.

(3) Cover front of the headlamp that is not being adjusted.

(4) Turn adjustment screw (Fig. 19) and (Fig. 20) until the top edge of the beam intensity pattern is positioned within 25 mm (1 in.) above or 75 mm (3 in.) below the headlamp horizontal centerline.

(5) Cover front of the headlamp and adjust the other headlamp beam as instructed below.

HEADLAMP UNIT (Continued)

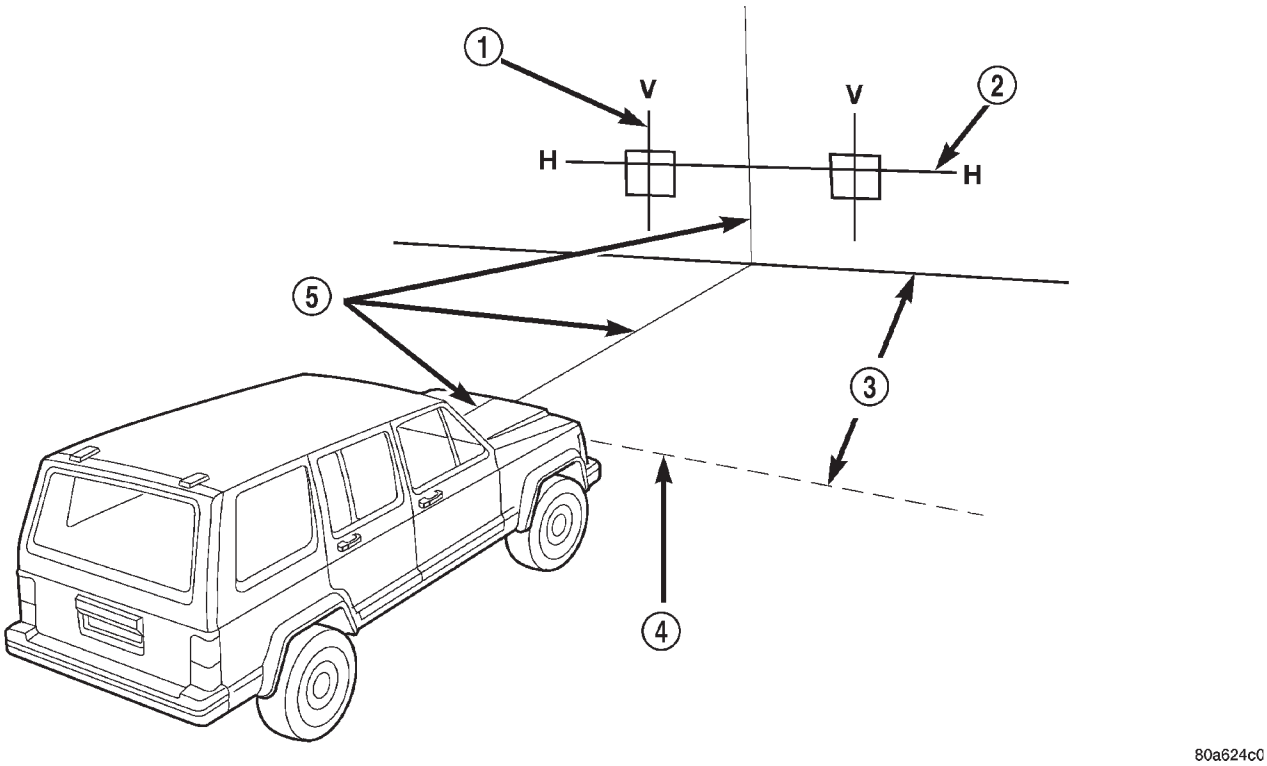

Fig. 17 Headlamp Alignment Screen—Typical

1 - CENTER OF VEHICLE TO CENTER OF HEADLAMP LENS
2 - FLOOR TO CENTER OF HEADLAMP LENS
3 - 7.62 METERS (25 FEET)
4 - FRONT OF HEADLAMP
5 - VEHICLE CENTERLINE

(6) Rotate the adjustment screw until the top edge of the beam intensity pattern is positioned within 25 mm (1 in.) above or 75 mm (3 in.) below the headlamp horizontal centerline.

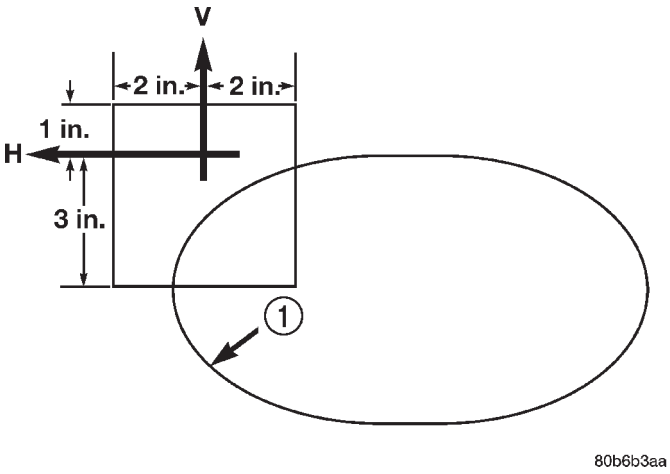

Fig. 18 Low Beam Pattern

1 - LOW BEAM INTENSITY PATTERN (ISO-CANDELA CURVE)

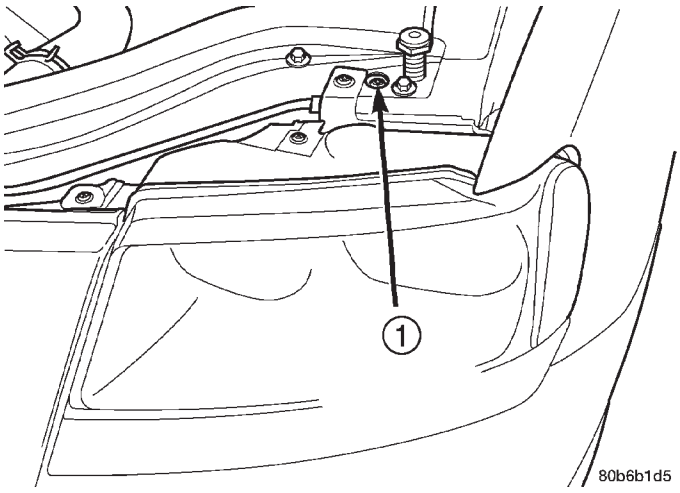

Fig. 19 Headlamp Beam Adjustment Screw

1 - ADJUSTMENT SCREW LOCATION

HEADLAMP UNIT (Continued)

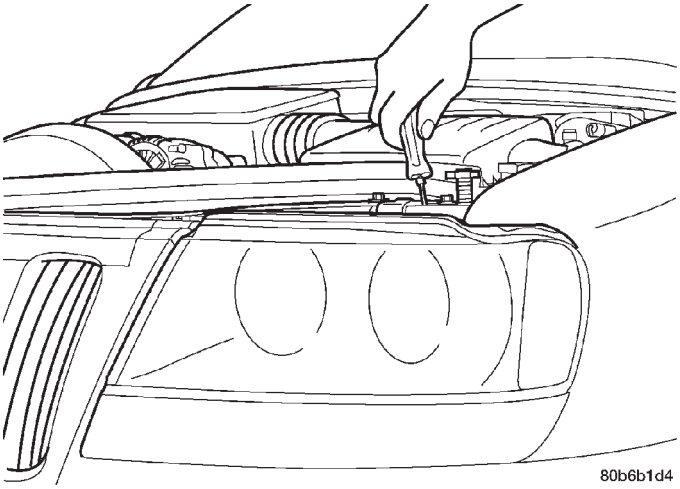

Fig. 20 Headlamp Beam Adjustment

LICENSE PLATE LAMP

REMOVAL - BULB

(1) Remove lamp assembly from liftgate lamp module.

(2) Rotate bulb socket counterclockwise to disconnect bulb socket from lamp.

(3) Remove bulb from socket.

REMOVAL - LAMP

(1) Remove the screws attaching lamp assembly to liftgate. (Fig. 21).

(2) Pull the lamp assembly away from the sheetmetal at extreme outboard edges to disengage the push pins.

(3) Separate lamp assembly harness wiring connector.

(4) Remove lamp.

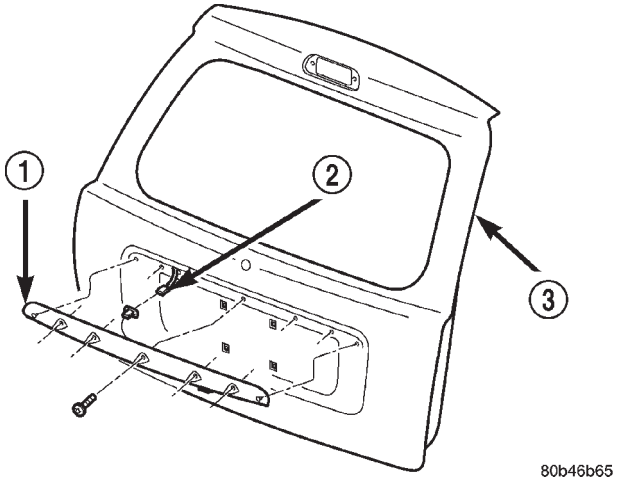

Fig. 21 License Plate Lamp Housing

1 - LICENSE PLATE LAMP
2 - CONNECTOR
3 - LIFTGATE

INSTALLATION - BULB

(1) Install bulb in socket.

(2) Install socket and bulb assembly in lamp housing.

(3) Install lamp assembly in liftgate lamp module.

INSTALLATION - LAMP

(1) Connect bulb harness to lamp assembly.

(2) Position lamp assembly on liftgate and press outboard fasteners in place.

(3) Install screws in lamp assembly.

LICENSE PLATE LAMP UNIT

REMOVAL

(1) Remove the screws retaining the lamp housing/trim panel to the liftgate (Fig. 22).

(2) Disconnect the wire harness for the license plate lamps and the flip up glass switch, if equipped.

(3) Remove the license plate lamps and the flip up glass switch, if equipped.

(4) Remove the license plate lamp housing.

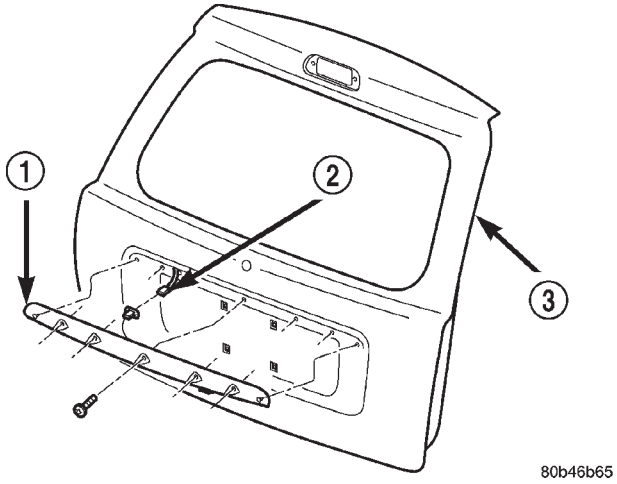

Fig. 22 License Plate Lamp Housing

1 - LICENSE PLATE LAMP
2 - CONNECTOR
3 - LIFTGATE

INSTALLATION

(1) Install the license plate lamps, and the flip up glass switch, if equipped.

(2) Connect the wire harnesses for the license plate lamps and the flip up glass switch.

(3) Install the lamp housing/trim panel on the liftgate.

LEFT MULTI-FUNCTION SWITCH

DESCRIPTION

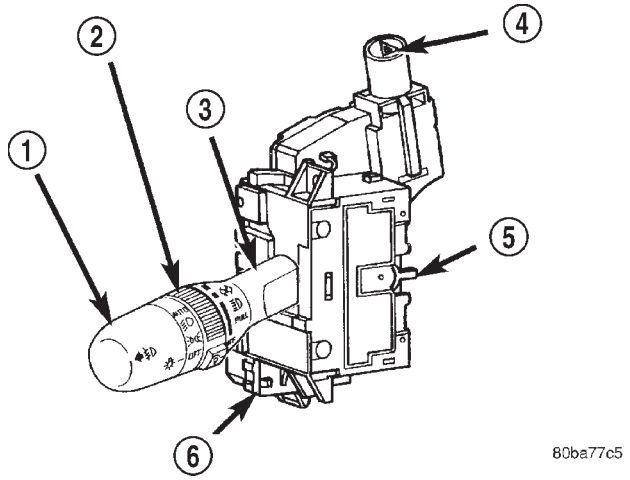

Fig. 23 Left (Lighting) Multi-Function Switch

1 - EXTERIOR LIGHTING CONTROL
2 - INTERIOR LIGHTING CONTROL
3 - CONTROL STALK
4 - HAZARD WARNING BUTTON
5 - CANCEL ACTUATOR
6 - LEFT (LIGHTING) MULTI-FUNCTION SWITCH

The left (lighting) multi-function switch is secured with two screws to the left side of the multi-function switch mounting housing at the top of the steering column, just below the steering wheel (Fig. 23). The only visible parts of the left multi-function switch are the control stalk that extends through a dedicated opening in the left side of the steering column shrouds, and the hazard warning switch push button that protrudes from the top of the upper steering column shroud. The remainder of the switch, its mounting provisions, and its electrical connections are all concealed beneath the steering column shrouds. The left multi-function switch control stalk has both nomenclature and International Control and Display Symbol graphics applied to it, which identify its many functions. An International Control and Display Symbol icon for “Hazard Warning” is applied to the top of the hazard warning switch push button.

The switch housing and its controls are constructed of molded black plastic. A single connector receptacle with eleven terminal pins is located on the back of the switch housing and connects the switch to the vehicle electrical system through a take out and connector of the instrument panel wire harness. The left multi-function switch supports the following exterior lighting functions and features:

- **Auto Headlamps** - For vehicles so equipped, the internal circuitry and hardware of the left multi-function switch provide detent switching for the optional automatic headlamps feature. Auto headlamps is an optional feature only for vehicles built in the United States for sale in domestic markets.
- **Front Fog Lamps** - For vehicles so equipped, the internal circuitry and hardware of the left multi-function switch provide detent switching for the optional front fog lamps.
- **Hazard Warning Control** - The internal circuitry and hardware of the left multi-function switch provide detent switching for activation and deactivation of the hazard warning lamps.
- **Headlamps** - The internal circuitry and hardware of the left multi-function switch provide detent switching for the headlamps.
- **Headlamp Beam Selection** - The internal circuitry and hardware of the left multi-function switch provide detent switching for selection of the headlamp high or low beams.
- **Headlamp Optical Horn** - The internal circuitry and hardware of the left multi-function switch includes momentary switching of the headlamp high beam circuits to provide an optical horn feature (sometimes referred to as flash-to-pass), which allows the vehicle operator to momentarily flash the headlamp high beams as an optical signalling device.
- **Park Lamps** - The internal circuitry and hardware of the left multi-function switch provide detent switching for the parking lamps.
- **Rear Fog Lamps** - For vehicles so equipped, the internal circuitry and hardware of the left multi-function switch provide detent switching for the optional rear fog lamps. Rear fog lamps are optional only for vehicles built in Austria for sale in certain international markets where they are required.
- **Turn Signal Control** - The internal circuitry and hardware of the left multi-function switch provide both momentary non-detent switching and detent switching with automatic cancellation for both the left and right turn signal lamps.

The left multi-function switch also supports the following interior lighting functions and features:

- **Panel Lamps Dimming** - The internal circuitry and hardware of the left multi-function switch provide simultaneous adjustable control of the illumination intensity of all instrument panel lighting.
- **Interior Lamps Defeat** - The internal circuitry and hardware of the left multi-function switch provide detent switching to defeat the illumination of all interior lights when a door or the liftgate are opened.
- **Interior Lamps On** - The internal circuitry and hardware of the left multi-function switch provide detent switching to simultaneously illuminate all interior lights.

LEFT MULTI-FUNCTION SWITCH (Continued)

• **Parade Mode** - The internal circuitry and hardware of the left multi-function switch provide detent switching for a parade mode that maximizes the illumination intensity of all instrument panel lighting for visibility when driving in daylight with the exterior lamps on.

The left multi-function switch cannot be adjusted or repaired. If any function of the switch is faulty, or if the switch is damaged, the entire switch unit must be replaced.

OPERATION

The left (lighting) multi-function switch uses a combination of resistor multiplexed and conventionally switched outputs to control the many functions and features it provides using a minimal number of hard wired circuits. The switch is grounded at all times through a single wire take out with an eyelet terminal connector of the instrument panel wire harness that is secured by a nut to a ground stud located on the floor panel transmission tunnel beneath the center floor console, just forward of the Airbag Control Module (ACM). Following are descriptions of the how the left multi-function switch operates to control the many exterior lighting functions and features it provides:

• **Auto Headlamps** - For vehicles so equipped, the knob on the end of the left multi-function switch control stalk is rotated counterclockwise to its most forward detent to activate the automatic headlamps feature. The automatic headlamps feature is provided by the Body Control Module (BCM), which monitors an input from a photodiode sensor located on the top of the instrument panel to detect ambient light levels whenever the ignition switch is in the On position. Based upon the multiplexed input from the left multi-function switch and the input of the photodiode sensor, the BCM controls outputs to the park lamp and headlamp relays to illuminate or extinguish all exterior lighting.

• **Front Fog Lamps** - For vehicles so equipped, the knob on the end of the left multi-function switch control stalk is pulled outward to activate the optional front fog lamps. The Body Control Module (BCM) monitors the left multi-function switch then, based upon that switched ground input, controls an output to the front fog lamp relay to illuminate or extinguish the front fog lamps.

• **Hazard Warning Control** - The hazard warning push button is pushed down to unlatch the switch and activate the hazard warning system, and pushed down again to latch the switch and turn the system off. When the hazard warning switch is latched (hazard warning off), the push button will be in a lowered position on the top of the steering column shroud; and, when the hazard warning switch is unlatched (hazard warning on), the push button will be in a raised position. The left multi-function switch provides a ground to the hazard warning sense input of the combination flasher to control activation and deactivation of the hazard warning lamps.

• **Headlamps** - The knob on the end of the left multi-function switch control stalk is rotated forward (counterclockwise) to its second detent from the Off position to activate the headlamps. The Body Control Module (BCM) monitors the left multi-function switch then, based upon that multiplexed input, controls an output to the headlamp low or high beam relays to illuminate or extinguish the headlamps.

• **Headlamp Beam Selection** - The left multi-function switch control stalk is pulled towards the steering wheel past a detent, then released to actuate the headlamp beam selection switch. Each time the control stalk is actuated in this manner, the opposite headlamp mode from what is currently selected will be activated. The Body Control Module (BCM) monitors the left multi-function switch then, based upon that switched ground input, controls an output to the headlamp low or high beam relays to activate the selected headlamp beam.

• **Headlamp Optical Horn** - The left multi-function switch control stalk is pulled towards the steering wheel to just before a detent, to momentarily activate the headlamp high beams. The high beams will remain illuminated until the control stalk is released. The Body Control Module (BCM) monitors the left multi-function switch then, based upon that switched ground input, controls an output to the headlamp high beam relay to activate the headlamp high beams.

• **Park Lamps** - The knob on the end of the left multi-function switch control stalk is rotated forward (counterclockwise) to its first detent from the Off position to activate the parking lamps. The Body Control Module (BCM) monitors the left multi-function switch then, based upon that multiplexed input, controls an output to the park lamp relay to illuminate or extinguish the parking lamps.

• **Rear Fog Lamps** - For vehicles so equipped, the knob on the end of the left multi-function switch control stalk is rotated counterclockwise to its most forward detent to activate the optional rear fog lamps. The Body Control Module (BCM) monitors the left multi-function switch then, based upon that multiplexed input, controls an output to the rear fog lamp relay to illuminate or extinguish the rear fog lamps.

• **Turn Signal Control** - The left multi-function switch control stalk actuates the turn signal switch. When the control stalk is moved in the upward direction, the right turn signal circuitry is activated; and, when the control stalk is moved in the downward

LEFT MULTI-FUNCTION SWITCH (Continued)

direction, the left turn signal circuitry is activated. The turn signal switch has a detent position in each direction that provides turn signals with automatic cancellation, and an intermediate, momentary position in each direction that provides turn signals only until the left multi-function switch control stalk is released. When the control stalk is moved to a turn signal switch detent position, the cancel actuator extends toward the center of the steering column. A turn signal cancel cam that is integral to the multi-function switch mounting housing rotates with the steering wheel and the cam lobes contact the cancel actuator when it is extended from the left multi-function switch. When the steering wheel is rotated during a turning maneuver, one of the two turn signal cancel cam lobes will contact the turn signal cancel actuator. The cancel actuator latches against the cancel cam rotation in the direction opposite that which is signaled. In other words, if the left turn signal detent is selected, the lobes of the cancel cam will ratchet past the cancel actuator when the steering wheel is rotated to the left, but will unlatch the cancel actuator as the steering wheel rotates to the right and returns to center, which will cancel the turn signal event and release the control stalk from the detent so it returns to the neutral Off position.

Following are descriptions of the how the left multi-function switch operates to control the many interior lighting functions and features it provides:

- **Panel Lamps Dimming** - A control ring on the left multi-function switch control stalk just inboard of the knob on the end of the control stalk is rotated to one of six intermediate detent positions to simultaneously select the desired illumination intensity of all instrument panel lighting. The control ring is rotated forward (counterclockwise) to brighten, or rearward (clockwise) to dim the instrument panel lighting. The Body Control Module (BCM) monitors the left multi-function switch then, based upon that multiplexed input, provides a variable voltage output through several panel lamps driver circuits to control the lighting of many incandescent panel lamps, and also sends panel lamps dimming messages over the Programmable Communications Interface (PCI) data bus to other electronic modules on the bus to control both incandescent and Vacuum-Fluorescent Display (VFD) lighting levels in those modules.
- **Interior Lamps Defeat** - A control ring on the left multi-function switch control stalk just inboard of the knob on the end of the control stalk is rotated to a full rearward (clockwise) detent to defeat the illumination of all interior lights when a door or the liftgate are opened. The Body Control Module (BCM) monitors the left multi-function switch then, based upon that multiplexed input, internally disables the function the BCM normally provides to control the illumination of the interior lamps.
- **Interior Lamps On** - A control ring on the left multi-function switch control stalk just inboard of the knob on the end of the control stalk is rotated to a full forward (counterclockwise) detent to illuminate all interior lights. The Body Control Module (BCM) monitors the left multi-function switch then, based upon that multiplexed input, provides a control output to activate all of the interior lamp circuits.
- **Parade Mode** - A control ring on the left multi-function switch control stalk just inboard of the knob on the end of the control stalk is rotated to an intermediate detent that is one detent rearward (counterclockwise) from the full forward (counterclockwise) detent to illuminate all instrument panel lighting at full intensity. The Body Control Module (BCM) monitors the left multi-function switch then, based upon that multiplexed input, provides a voltage output through several panel lamps driver circuits to control the lighting of many incandescent panel lamps, and also sends panel lamps dimming messages over the Programmable Communications Interface (PCI) data bus to other electronic modules on the bus to control both incandescent and Vacuum-Fluorescent Display (VFD) lighting levels in those modules.

DIAGNOSIS AND TESTING - LEFT MULTI-FUNCTION SWITCH

Refer to the appropriate wiring information. The wiring information includes wiring diagrams, proper wire and connector repair procedures, details of wire harness routing and retention, connector pin-out information and location views for the various wire harness connectors, splices and grounds.

WARNING: ON VEHICLES EQUIPPED WITH AIRBAGS, DISABLE THE AIRBAG SYSTEM BEFORE ATTEMPTING ANY STEERING WHEEL, STEERING COLUMN, OR INSTRUMENT PANEL COMPONENT DIAGNOSIS OR SERVICE. DISCONNECT AND ISOLATE THE BATTERY NEGATIVE (GROUND) CABLE, THEN WAIT TWO MINUTES FOR THE AIRBAG SYSTEM CAPACITOR TO DISCHARGE BEFORE PERFORMING FURTHER DIAGNOSIS OR SERVICE. THIS IS THE ONLY SURE WAY TO DISABLE THE AIRBAG SYSTEM. FAILURE TO TAKE THE PROPER PRECAUTIONS COULD RESULT IN ACCIDENTAL AIRBAG DEPLOYMENT AND POSSIBLE PERSONAL INJURY.

LEFT MULTI-FUNCTION SWITCH (Continued)

(1) Disconnect and isolate the battery negative cable. Disconnect the instrument panel wire harness connector from the left multi-function switch connector receptacle.

(2) Using an ohmmeter, perform the continuity and resistance tests at the terminals in the left multi-function switch connector receptacle as shown in the Left Multi-Function Switch Test chart (Fig. 24).

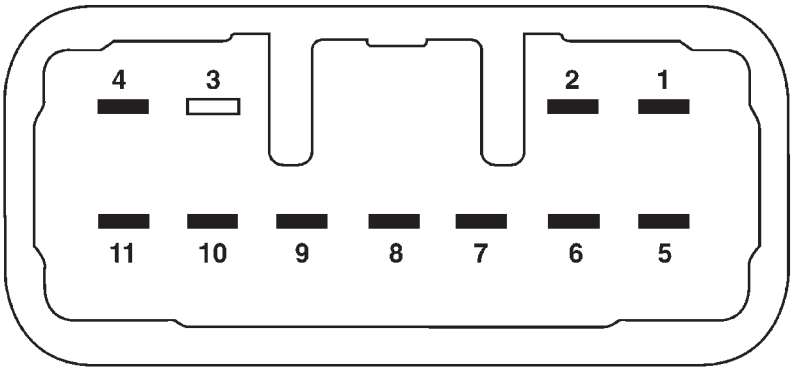

Fig. 24 Left Multi-Function Switch Test

LEFT (LIGHTING) MULTI-FUNCTION SWITCH			
TURN SIGNAL AND HAZARD WARNING SWITCH TESTS			
SWITCH POSITION		CONTINUITY BETWEEN	
TURN	HAZARD		
Neutral	Off	No Related Continuity	
Left	Off	Pins 2 & 8	
Right	Off	Pins 2 & 7	
Neutral	On	Pins 2 & 9	
EXTERIOR LIGHTING SWITCH TESTS			
SWITCH POSITION	CONTINUITY BETWEEN	RESISTANCE BETWEEN	RESISTANCE RANGE (OHMS)
Off	-	Pins 4 & 11	3743 - 3824
Park Lamps On	-	Pins 4 & 11	901 - 926
Head Lamps On	-	Pins 4 & 11	345 - 358
Auto Headlamps On	-	Pins 4 & 11	74 - 81
Fog Lamps	Pins 1 & 2	-	-
Optical Horn	Pins 2 & 5	-	-
High Beam	Pins 2 & 6	-	-
INTERIOR LIGHTING SWITCH TESTS			
Dome Lamp Disable On	-	Pins 4 & 9	63 - 70
Panel Lamps Dimming Position 1	-	Pins 4 & 9	198 - 208
Dimming Position 2	-	Pins 4 & 9	551 - 569
Dimming Position 3	-	Pins 4 & 9	905 - 929
Dimming Position 4	-	Pins 4 & 9	1258 - 1290
Dimming Position 5	-	Pins 4 & 9	1611 - 1651
Dimming Position 6	-	Pins 4 & 9	1965 - 2011
Parade Mode On	-	Pins 4 & 9	3534 - 3611
Dome Lamp Enable On	-	Pins 4 & 9	7811 - 7974

LEFT MULTI-FUNCTION SWITCH (Continued)

(3) If the left multi-function switch fails any of the continuity or resistance tests, replace the faulty switch unit as required.

REMOVAL - LEFT MULTI-FUNCTION SWITCH

WARNING: ON VEHICLES EQUIPPED WITH AIRBAGS, DISABLE THE AIRBAG SYSTEM BEFORE ATTEMPTING ANY STEERING WHEEL, STEERING COLUMN, OR INSTRUMENT PANEL COMPONENT DIAGNOSIS OR SERVICE. DISCONNECT AND ISOLATE THE BATTERY NEGATIVE (GROUND) CABLE, THEN WAIT TWO MINUTES FOR THE AIRBAG SYSTEM CAPACITOR TO DISCHARGE BEFORE PERFORMING FURTHER DIAGNOSIS OR SERVICE. THIS IS THE ONLY SURE WAY TO DISABLE THE AIRBAG SYSTEM. FAILURE TO TAKE THE PROPER PRECAUTIONS COULD RESULT IN ACCIDENTAL AIRBAG DEPLOYMENT AND POSSIBLE PERSONAL INJURY.

(1) Disconnect and isolate the battery negative cable.

(2) Remove the screw that secures the lower tilting steering column shroud to the steering column multi-function switch mounting housing (Fig. 25).

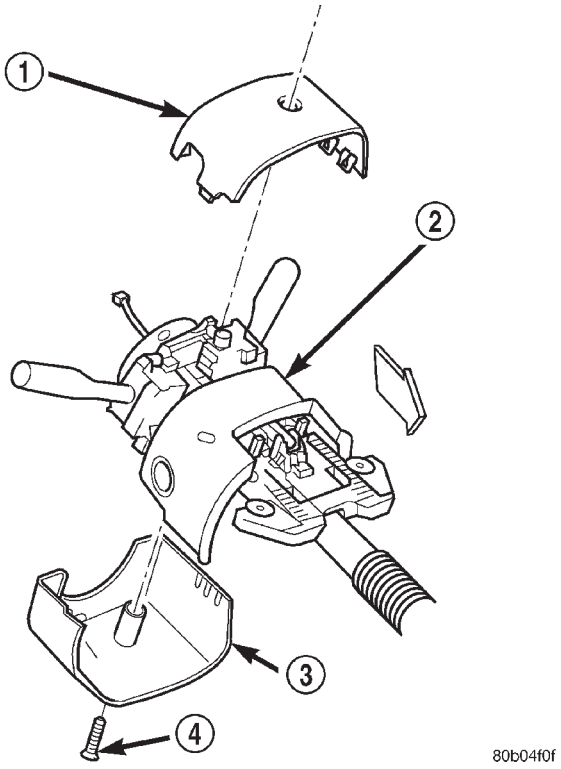

Fig. 25 Steering Column Shrouds Remove/Install

1 - UPPER TILTING COLUMN SHROUD
2 - FIXED COLUMN SHROUD
3 - LOWER TILTING COLUMN SHROUD
4 - SCREW

(3) Unsnap the two halves of the tilting steering column shroud from each other and remove both halves from the steering column.

(4) Disconnect the instrument panel wire harness connector for the left multi-function switch from the switch connector receptacle.

(5) Remove the two screws that secure the left multi-function switch to the multi-function switch mounting housing (Fig. 26).

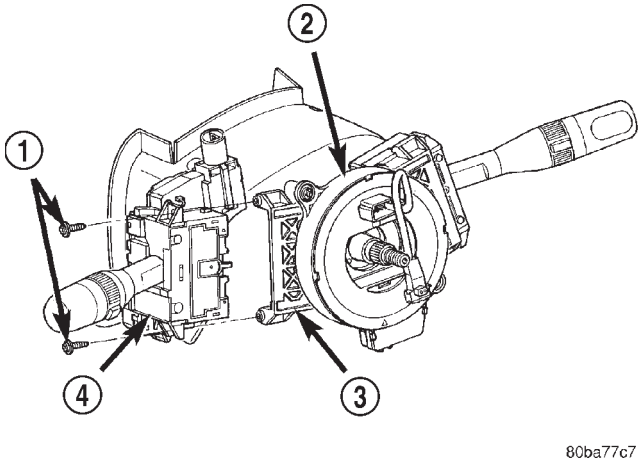

Fig. 26 Left Multi-Function Switch Remove/Install

1 - SCREW (2)
2 - STEERING COLUMN
3 - MULTI-FUNCTION SWITCH MOUNTING HOUSING
4 - LEFT MULTI-FUNCTION SWITCH

(6) Remove the left multi-function switch from the multi-function switch mounting housing.

REMOVAL - MULTI-FUNCTION SWITCH MOUNTING HOUSING

WARNING: ON VEHICLES EQUIPPED WITH AIRBAGS, DISABLE THE AIRBAG SYSTEM BEFORE ATTEMPTING ANY STEERING WHEEL, STEERING COLUMN, OR INSTRUMENT PANEL COMPONENT DIAGNOSIS OR SERVICE. DISCONNECT AND ISOLATE THE BATTERY NEGATIVE (GROUND) CABLE, THEN WAIT TWO MINUTES FOR THE AIRBAG SYSTEM CAPACITOR TO DISCHARGE BEFORE PERFORMING FURTHER DIAGNOSIS OR SERVICE. THIS IS THE ONLY SURE WAY TO DISABLE THE AIRBAG SYSTEM. FAILURE TO TAKE THE PROPER PRECAUTIONS COULD RESULT IN ACCIDENTAL AIRBAG DEPLOYMENT AND POSSIBLE PERSONAL INJURY.

NOTE: Before starting this procedure, be certain to turn the steering wheel until the front wheels are in the straight-ahead position.

LEFT MULTI-FUNCTION SWITCH (Continued)

(1) Place the front wheels in the straight-ahead position.

(2) Disconnect and isolate the battery negative cable.

(3) Remove the clockspring from the multi-function switch mounting housing. (Refer to 8 - ELECTRICAL/RESTRAINTS/CLOCKSPRING - REMOVAL).

(4) Remove the left multi-function switch from the multi-function switch mounting housing. (Refer to 8 - ELECTRICAL/LAMPS/LIGHTING - EXTERIOR/ LEFT MULTI-FUNCTION SWITCH - REMOVAL - LEFT MULTI-FUNCTION SWITCH).

(5) Remove the right multi-function switch from the multi-function switch mounting housing. (Refer to 8 - ELECTRICAL/WIPERS/WASHERS/RIGHT MULTI-FUNCTION SWITCH - REMOVAL).

(6) From the underside of the steering column, remove the one screw that secures the multi-function switch mounting housing to the steering column housing (Fig. 27).

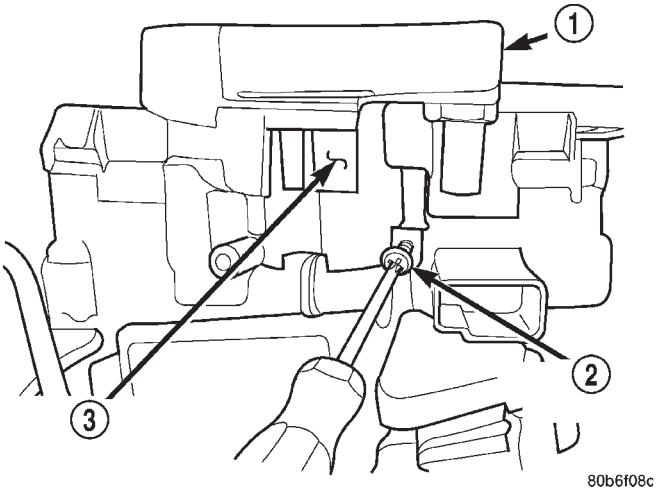

Fig. 27 Multi-Function Switch Mounting Housing Screw Remove/Install

1 - CLOCK SPRING
2 - SCREW
3 - MULTI-FUNCTION SWITCH MOUNTING HOUSING

(7) Remove the multi-function switch mounting housing from the top of the steering column (Fig. 28).

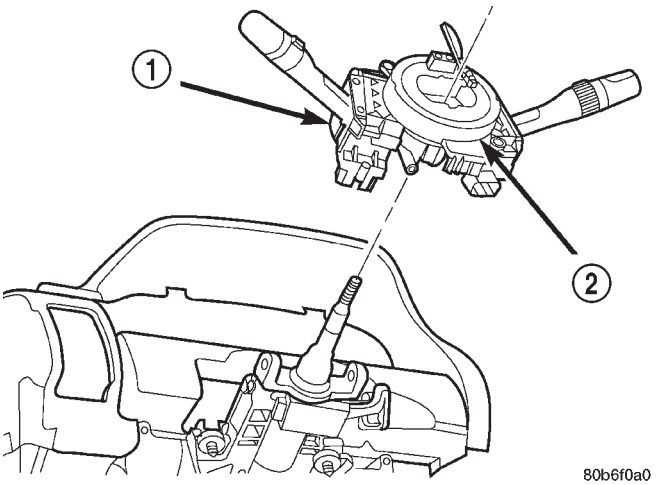

Fig. 28 Multi-Function Switch Mounting Housing Remove/install

1 - MULTI-FUNCTION SWITCH ASSEMBLY
2 - CLOCKSPRING

INSTALLATION - LEFT MULTI-FUNCTION SWITCH

WARNING: ON VEHICLES EQUIPPED WITH AIRBAGS, DISABLE THE AIRBAG SYSTEM BEFORE ATTEMPTING ANY STEERING WHEEL, STEERING COLUMN, OR INSTRUMENT PANEL COMPONENT DIAGNOSIS OR SERVICE. DISCONNECT AND ISOLATE THE BATTERY NEGATIVE (GROUND) CABLE, THEN WAIT TWO MINUTES FOR THE AIRBAG SYSTEM CAPACITOR TO DISCHARGE BEFORE PERFORMING FURTHER DIAGNOSIS OR SERVICE. THIS IS THE ONLY SURE WAY TO DISABLE THE AIRBAG SYSTEM. FAILURE TO TAKE THE PROPER PRECAUTIONS COULD RESULT IN ACCIDENTAL AIRBAG DEPLOYMENT AND POSSIBLE PERSONAL INJURY.

(1) Position the left multi-function switch onto the multi-function switch mounting housing (Fig. 29).

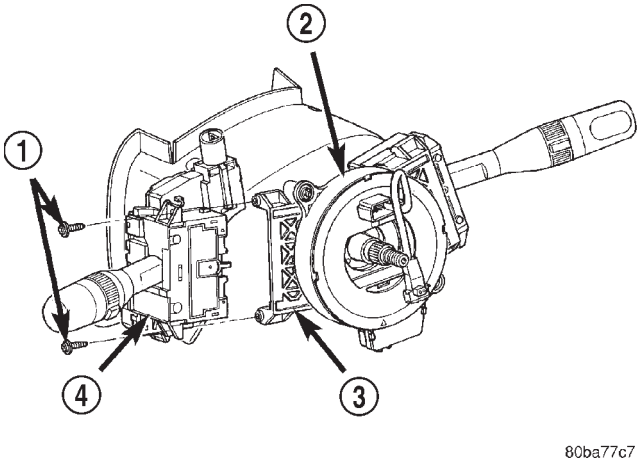

Fig. 29 Left Multi-Function Switch Remove/Install

1 - SCREW (2)
2 - STEERING COLUMN
3 - MULTI-FUNCTION SWITCH MOUNTING HOUSING
4 - LEFT MULTI-FUNCTION SWITCH

(2) Install and tighten the two screws that secure the left multi-function switch to the multi-function

LEFT MULTI-FUNCTION SWITCH (Continued)

switch mounting housing. Tighten the screws to 2.5 N·m (22 in. lbs.).

(3) Reconnect the instrument panel wire harness connector for the left multi-function switch to the switch connector receptacle.

(4) Position the lower tilting steering column shroud to the underside of the steering column (Fig. 30).

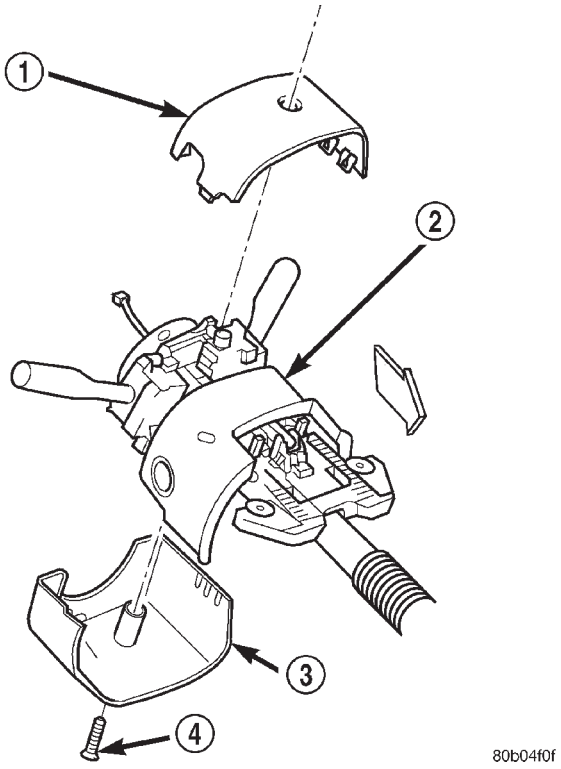

Fig. 30 Steering Column Shrouds Remove/Install

1 - UPPER TILTING COLUMN SHROUD
2 - FIXED COLUMN SHROUD
3 - LOWER TILTING COLUMN SHROUD
4 - SCREW

(5) Install and tighten the screw that secures the lower tilting steering column shroud to the multi-function switch mounting housing. Tighten the screw to 1.9 N·m (17 in. lbs.).

(6) Position the upper tilting column shroud over the steering column with the hazard warning switch button inserted through the hole in the upper surface of the shroud. Align the upper tilting steering column shroud to the lower shroud and snap the two shroud halves together.

(7) Reconnect the battery negative cable.

INSTALLATION - MULTI-FUNCTION SWITCH MOUNTING HOUSING

WARNING: ON VEHICLES EQUIPPED WITH AIRBAGS, DISABLE THE AIRBAG SYSTEM BEFORE ATTEMPTING ANY STEERING WHEEL, STEERING COLUMN, OR INSTRUMENT PANEL COMPONENT DIAGNOSIS OR SERVICE. DISCONNECT AND ISOLATE THE BATTERY NEGATIVE (GROUND) CABLE, THEN WAIT TWO MINUTES FOR THE AIRBAG SYSTEM CAPACITOR TO DISCHARGE BEFORE PERFORMING FURTHER DIAGNOSIS OR SERVICE. THIS IS THE ONLY SURE WAY TO DISABLE THE AIRBAG SYSTEM. FAILURE TO TAKE THE PROPER PRECAUTIONS COULD RESULT IN ACCIDENTAL AIRBAG DEPLOYMENT AND POSSIBLE PERSONAL INJURY.

NOTE: Before starting this procedure, be certain that the front wheels are still in the straight-ahead position.

(1) Rotate the turn signal cancel cam in the multi-function switch mounting housing until the alignment hole in the one cam lobe is aligned with the alignment hole in the back of the housing. The oblong hole in the hub of the cam should now be at the top, and the locating tab in the hub of the cam should be at the bottom (Fig. 31).

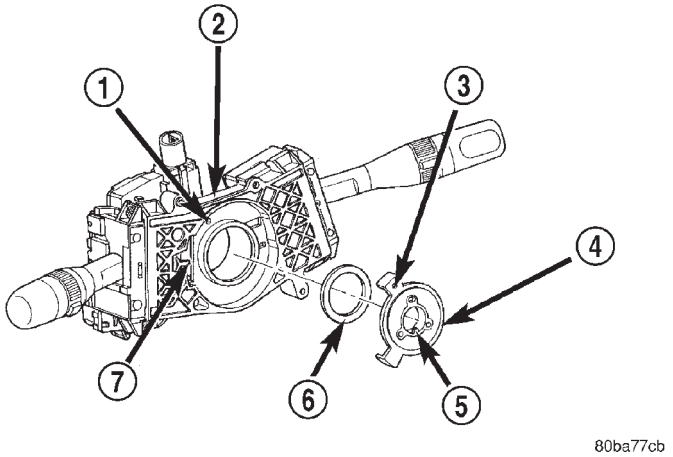

Fig. 31 Turn Signal Cancel Cam Alignment

1 - ALIGNMENT HOLE
2 - MULTI-FUNCTION SWITCH MOUNTING HOUSING
3 - ALIGNMENT HOLE
4 - TURN SIGNAL CANCEL CAM
5 - LOCATING TAB
6 - WASHER
7 - TURN SIGNAL SWITCH CANCEL ACTUATOR

(2) Position the multi-function switch mounting housing onto the top of the steering column. The locating tab in the hub of the turn signal cancel cam must be engaged with the alignment groove in the bottom of the upper steering column shaft.

(3) From the underside of the steering column, install and tighten the one screw that secures the

LEFT MULTI-FUNCTION SWITCH (Continued)

multi-function switch mounting housing to the top of the column housing (Fig. 32). Tighten the screw to 1.9 N·m (17 in. lbs.).

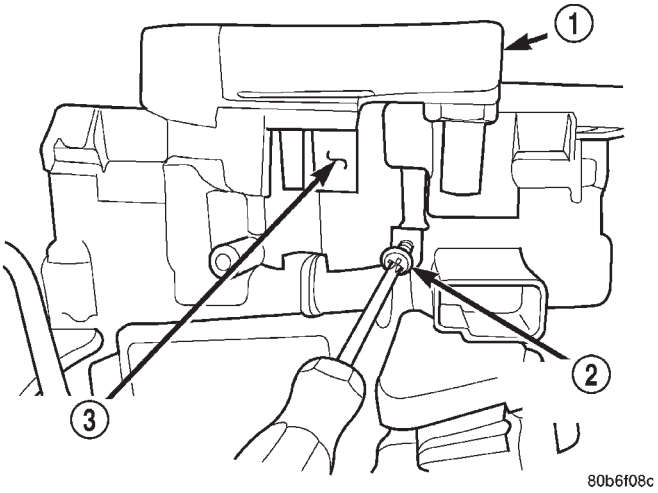

Fig. 32 Multi-Function Switch Mounting Housing Screw Remove/Install

1 - CLOCK SPRING
2 - SCREW
3 - MULTI-FUNCTION SWITCH MOUNTING HOUSING

(4) Reinstall the right multi-function switch onto the multi-function switch mounting housing. (Refer to 8 - ELECTRICAL/WIPERS/WASHERS/RIGHT MULTI-FUNCTION SWITCH - INSTALLATION).

(5) Reinstall the left multi-function switch onto the multi-function switch mounting housing. (Refer to 8 - ELECTRICAL/LAMPS/LIGHTING - EXTERIOR/ LEFT MULTI-FUNCTION SWITCH - INSTALLATION - LEFT MULTI-FUNCTION SWITCH).

(6) Reinstall the clockspring onto the multi-function switch mounting housing. (Refer to 8 - ELECTRICAL/RESTRAINTS/CLOCKSPRING - INSTALLATION).

(7) Reconnect the battery negative cable.

PARK/TURN SIGNAL LAMP

REMOVAL - BULBS

(1) Remove headlamp module.

(2) Rotate turn signal bulb socket 1/4 turn counter clockwise.

(3) Remove bulb socket from module.

(4) Pull bulb from socket.

INSTALLATION - BULBS

(1) Press bulb into socket.

(2) Position bulb socket in module.

(3) Rotate turn signal bulb socket 1/4 turn clockwise.

(4) Install headlamp module.

TAIL LAMP

DESCRIPTION

The taillamps on the Grand Cherokee are mounted at the rear of the vehicle, outboard of the rear hatch and integrated into the lines of the vehicle. The taillamp module contains a housing, lens, and three bulbs. A dual filament bulb is used for tail and stop functions. A single filament bulb is used for turn signal operations. A separate bulb is used for back-up illumination.

OPERATION

All exterior lighting function are controlled by the multifunction switch. Stop lamp functions are controlled by the stoplamp switch. The back-up lamps are controlled by the back-up lamp switch.

REMOVAL - BULBS

The brake, turn signal, back-up, and side marker lamp bulbs are incorporated into the tail lamp.

(1) Remove tail lamp.

(2) Grasp bulb socket and rotate counterclockwise.

(3) Separate socket from lamp

(4) Pull bulb from socket (Fig. 33).

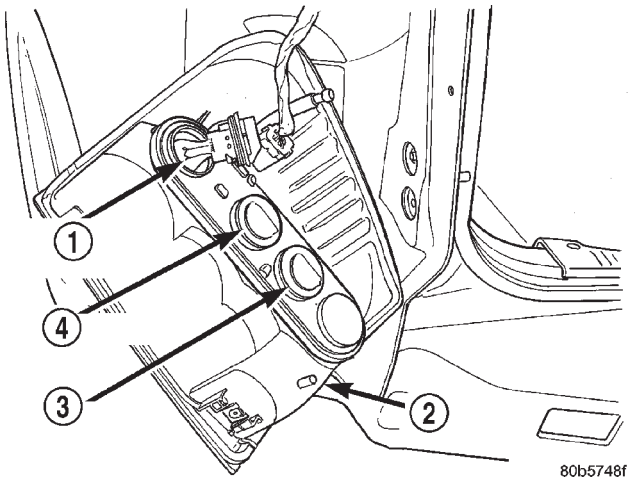

Fig. 33 Tail Lamp Bulbs

1 - TAIL/STOP BULB
2 - TAIL LAMP
3 - BACK-UP BULB
4 - TURN SIGNAL BULB

REMOVAL - LAMP

The brake, turn signal, back-up, and side marker lamps are incorporated in the tail lamp.

(1) Remove screws attaching lamp to body (Fig. 34).

TAIL LAMP (Continued)

(2) Grasp lamp and pull from body to disengage alignment pin.
(3) Disconnect lamp wire harness connector.
(4) Separate lamp from vehicle.

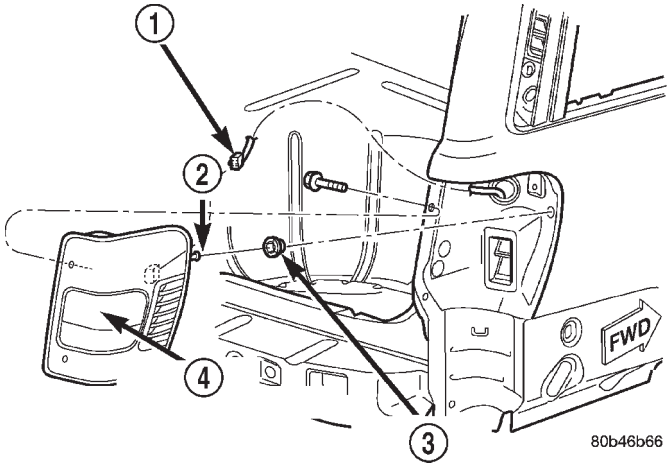

Fig. 34 Tail Lamp

1 - CONNECTOR
2 - PIN
3 - RETAINER
4 - TAILLAMP (STOP, TURN, BACK-UP SIDE MARKER)

INSTALLATION - BULBS

(1) Position bulb in socket and push into place.
(2) Position bulb socket in lamp and rotate clockwise.
(3) Install lamp.

INSTALLATION - LAMP

The brake, turn signal, back-up, and side marker lamps are incorporated in the tail lamp.
(1) Position lamp at vehicle.
(2) Connect lamp wire harness connector.
(3) Align pin with retainer and press lamp inward to engage.
(4) Install screws attaching lamp to body.

TURN SIGNAL CANCEL CAM

DESCRIPTION

The turn signal cancel cam is concealed within the multi-function switch mounting housing on the top of the steering column below the steering wheel and the clockspring mechanism. The turn signal cancel cam consists of a molded plastic hub and disc unit with two integral lobes. The upper lobe of the cam has an alignment hole that is used to align it with another hole in the back of the multi-function switch mounting housing. The inside diameter of the cancel cam hub has an integral metal-reinforced plastic key that locks the unit to a keyway in the upper steering column shaft. The upper surface of the turn signal cancel cam features three holes, two round and one oblong. These holes engage and key the cancel cam to three matching pins in the hub of the clockspring mechanism. The hub of the clockspring and the turn signal cancel cam rotate with the steering wheel. The centered clockspring housing is then secured to the multi-function switch mounting housing over the top of the turn signal cancel cam. The multi-function switch mounting housing is secured to the steering column and remains stationary.

The turn signal cancel cam is serviced as a unit with the multi-function switch mounting housing. The turn signal cancel cam cannot be repaired and, if faulty or damaged, the multi-function switch mounting housing unit must be replaced. (Refer to 8 - ELECTRICAL/LAMPS/LIGHTING - EXTERIOR/ LEFT MULTI-FUNCTION SWITCH - REMOVAL - MULTI-FUNCTION SWITCH MOUNTING HOUSING).

OPERATION

The turn signal cancel cam has two lobes. When the turn signals are activated by moving the left multi-function switch control stalk to a detent position, a turn signal cancel actuator is extended from the inside surface of the multi-function switch housing toward the center of the steering column and the turn signal cancel cam. When the steering wheel is rotated during a turning maneuver, one of the two turn signal cancel cam lobes will contact the turn signal cancel actuator. The cancel actuator latches against the cancel cam rotation in the direction opposite that which is signaled. In other words, if the left turn signal detent is selected, the lobes of the cancel cam will ratchet past the cancel actuator when the steering wheel is rotated to the left, but will unlatch the cancel actuator as the steering wheel rotates to the right and returns to center, which will cancel the turn signal event and release the control stalk from the detent so it returns to the neutral Off position.

UNDERHOOD LAMP

REMOVAL - BULB

(1) Insert a small flat blade in access slot between lamp base and lamp lens.
(2) Pry lamp lens upward and remove lamp lens (Fig. 35).
(3) Depress bulb terminal inward (Fig. 36) to release bulb.

UNDERHOOD LAMP (Continued)

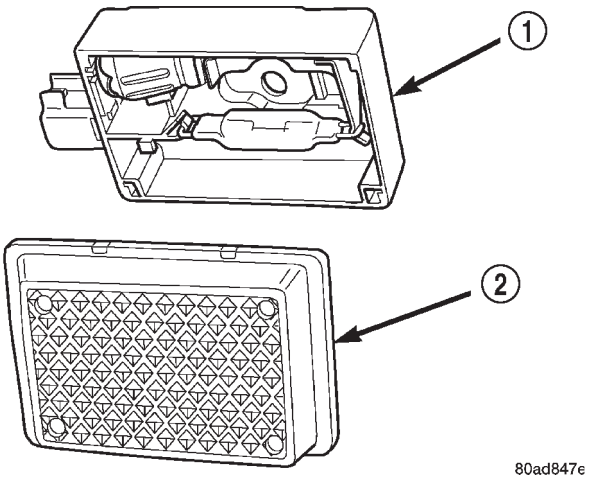

Fig. 35 Underhood Lamp Lens

1 - LAMP
2 - LAMP LENS

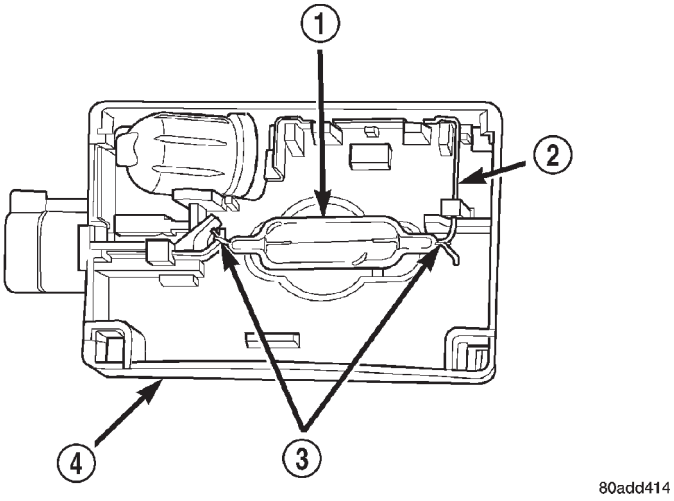

Fig. 36 Underhood Lamp Bulb

1 - BULB
2 - DEPRESS TERMINAL INWARD
3 - BULB WIRE LOOP
4 - LAMP BASE

REMOVAL - LAMP

(1) Disconnect wire harness connector from lamp.

(2) Remove screw attaching underhood lamp to inner hood panel (Fig. 37).

(3) Separate underhood lamp from vehicle.

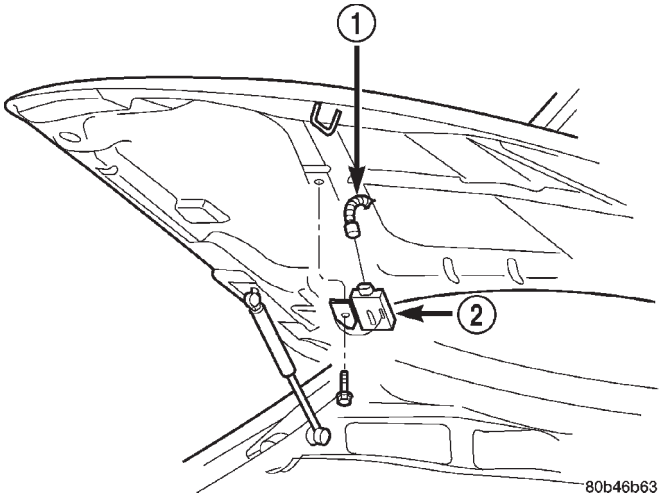

Fig. 37 Underhood Lamp

1 - CONNECTOR
2 - UNDERHOOD LAMP

INSTALLATION - BULB

(1) Engage replacement bulb wire loop to terminal closest to lamp base wire connector.

(2) Depress opposite terminal inward and engage remaining bulb wire loop.

(3) Position lamp lens on lamp base and press into place.

INSTALLATION - LAMP

(1) Position underhood lamp on hood inner panel.

(2) Install screw attaching lamp base to inner hood panel.

(3) Fold lamp housing over and firmly press onto base to snap into place.

(4) Connect wire harness connector to lamp.

LAMPS/LIGHTING - INTERIOR

TABLE OF CONTENTS

page

LAMPS/LIGHTING - INTERIOR
SPECIFICATIONS 31
COURTESY LAMP
REMOVAL 31
INSTALLATION. 31
DOME LAMP
REMOVAL 32
INSTALLATION. 32
DOOR AJAR SWITCH
DESCRIPTION 32
OPERATION. 33
DIAGNOSIS AND TESTING 33
DRIVER DOOR AJAR SWITCH. 33
GLOVE BOX LAMP/SWITCH
REMOVAL 34
INSTALLATION. 35
READING LAMP
DESCRIPTION 35
OPERATION. 35
REMOVAL 35
INSTALLATION. 36
VANITY LAMP
REMOVAL 36
INSTALLATION. 36

LAMPS/LIGHTING - INTERIOR

SPECIFICATIONS

CAUTION: Do not use bulbs other than the bulbs listed in the Bulb Application Table. Damage to lamp can result.

Service procedures for most of the lamps in the instrument panel, are located in Electrical, Instrument Panel. Some components have lamps that can only be serviced by an Authorized Service Center (ASC) after the component is removed from the vehicle. Contact local dealer for location of nearest ASC.

LAMP	BULB TYPE
A/C HEATER	NOT SERVICED
ASH RECEIVER	161
CLIMATE CONTROL	74
PASSENGER ASSIST HANDLE	214–2
FRONT READING	192
GLOVE COMPARTMENT	194
TELLTALE/HAZARD LAMP	74
HEATER	NOT SERVICED
OVERHEAD CONSOLE	192
RADIO	ASC
REAR CARGO	214–2
UNDER PANEL COURTESY	906
CLUSTER ILLUMINATION	103
SUNVISOR VANITY	CHRYSLER P/N 6501966

COURTESY LAMP

REMOVAL - BULB

(1) Remove door trim panel. (Refer to 23 - BODY/DOOR - FRONT/TRIM PANEL - REMOVAL) for the service procedures.
(2) Remove bulb socket from lamp.
(3) Pull bulb from socket.

REMOVAL - LAMP

(1) Remove door trim panel. (Refer to 23 - BODY/DOOR - FRONT/TRIM PANEL - REMOVAL) for the procedures.
(2) Disengage electrical connectors.
(3) Depress locking tabs and remove lamp module.
(4) Remove bulb socket.

INSTALLATION - BULB

(1) Position bulb in socket and press into place.
(2) Install bulb socket in lamp.
(3) Install door trim panel.

INSTALLATION - LAMP

(1) Install bulb socket in lamp module.

COURTESY LAMP (Continued)

(2) Align lamp module with door trim panel opening.
(3) Snap lamp module into place.
(4) Install door panel.

DOME LAMP

REMOVAL - BULB

(1) Rotate the grab handle down.
(2) Remove the screws retaining the grab handle/dome lens.
(3) Remove grab handle/lens from module.
(4) Remove bulb from lamp terminals.

REMOVAL - LAMP

It will be necessary to partially remove the headliner to remove the bulb socket.
(1) Remove the screws holding the grab handle/lens assembly to the headliner and roof panel.
(2) Lower the headliner as needed. (Refer to 23 - BODY/INTERIOR/HEADLINER - REMOVAL) for the service procedure.
(3) Separate the lamp socket from the headliner and roof panel.
(4) Disconnect the wire connector.

INSTALLATION - BULB

(1) Insert bulb into lamp terminals.
(2) Position the grab handle/lens on lamp module.
(3) Install the screws retaining the grab handle/lens to the lamp module.

INSTALLATION - LAMP

(1) Position the lamp socket on the headliner and roof panel.
(2) Connect the wire harness.
(3) Install the headliner.
(4) Position the grab handle/lens on the lamp module.
(5) Install the screws retaining the grab handle/lens into the lamp socket.

DOOR AJAR SWITCH

DESCRIPTION - DOOR AJAR SWITCH

The door ajar switches are concealed within and integral to the door latch units. The front door ajar switches are actuated by the front door latch mechanisms, and are hard wired between a body ground and the Driver Door Module (DDM) or the Passenger Door Module (PDM) through the front door wire harnesses. The rear door ajar switches are actuated by the rear door latch mechanisms, and are hard wired between a body ground and the Body Control Module (BCM) through the rear door and body wire harnesses.

The door ajar switches cannot be adjusted or repaired and, if faulty or damaged, the door latch unit must be replaced. (Refer to 23 - BODY/DOOR - FRONT/LATCH - REMOVAL) or (Refer to 23 - BODY/DOORS - REAR/LATCH - REMOVAL) for the service procedures. For complete circuit diagrams, refer to the appropriate wiring information. The wiring information includes wiring diagrams, proper wire and connector repair procedures, details of wire harness routing and retention, connector pin-out information and location views for the various wire harness connectors, splices and grounds.

DESCRIPTION - FLIP UP GLASS AJAR SWITCH

The liftgate flip-up glass ajar switch is concealed within and integral to the liftgate flip-up glass latch unit in the liftgate. The liftgate flip-up glass ajar switch is actuated by the liftgate flip-up glass latch mechanism, and is hard wired in series between a body ground, the Body Control Module (BCM) and the rear wiper motor module through the liftgate and body wire harnesses.

The liftgate flip-up glass ajar switch cannot be adjusted or repaired and, if faulty or damaged, the liftgate flip-up glass latch unit must be replaced. (Refer to 23 - BODY/DECKLID/HATCH/LIFTGATE/TAILGATE/FLIP-UP GLASS LATCH - REMOVAL) for the service procedures. For complete circuit diagrams, refer to the appropriate wiring information. The wiring information includes wiring diagrams, proper wire and connector repair procedures, details of wire harness routing and retention, connector pin-out information and location views for the various wire harness connectors, splices and grounds.

DESCRIPTION - LIFTGATE AJAR SWITCH

The two liftgate ajar switches are concealed within and integral to the two liftgate latch units in the liftgate. The two liftgate ajar switches are actuated by the liftgate latch mechanisms, and are hard wired in parallel with each other between a body ground and the Body Control Module (BCM) through the liftgate and body wire harnesses.

The liftgate ajar switches cannot be adjusted or repaired and, if faulty or damaged, the liftgate latch unit must be replaced. (Refer to 23 - BODY/DECKLID/HATCH/LIFTGATE/TAILGATE/LATCH - REMOVAL) for the service procedures. For complete circuit diagrams, refer to the appropriate wiring information. The wiring information includes wiring diagrams, proper wire and connector repair procedures, details of wire harness routing and retention, connector pin-out information and location views for

DOOR AJAR SWITCH (Continued)

the various wire harness connectors, splices and grounds.

DESCRIPTION - DRIVER DOOR AJAR SWITCH

The driver door ajar switch is concealed within and integral to the driver side front door latch unit. The driver door ajar switch is actuated by the front door latch mechanism, and is hard wired between a body ground and the Driver Door Module (DDM) through the driver side front door wire harness.

The driver door ajar switch cannot be adjusted or repaired and, if faulty or damaged, the driver side front door latch unit must be replaced. (Refer to 23 - BODY/DOOR - FRONT/LATCH - REMOVAL) for the service procedures. (Refer to 8 - ELECTRICAL/ ELECTRONIC CONTROL MODULES/DRIVER DOOR MODULE - DESCRIPTION) for more information on this component. For complete circuit diagrams, refer to the appropriate wiring information. The wiring information includes wiring diagrams, proper wire and connector repair procedures, details of wire harness routing and retention, connector pin-out information and location views for the various wire harness connectors, splices and grounds.

OPERATION - DOOR AJAR SWITCH

The front door ajar switches close a path to ground for the DDM or the PDM when a front door is opened, and opens the ground path when a front door is closed. The rear door ajar switches close a path to ground for the BCM when a rear door is opened, and opens the ground path when a rear door is closed. The DDM, PDM, or BCM reads the switch status through an internal pull-up, then sends the proper switch status messages to other electronic modules over the Programmable Communications Interface (PCI) data bus network. The door ajar switch status message is used by the BCM as an input for Vehicle Theft Security System (VTSS) operation.

OPERATION - FLIP UP GLASS AJAR SWITCH

The liftgate flip-up glass ajar switch can close a path to ground for the BCM and the rear wiper motor module when the liftgate flip-up glass is opened, and opens the ground path when the liftgate flip-up glass is closed. The rear wiper motor module uses the liftgate flip-up glass ajar switch input to control the rear wiper operation, and will park the rear wiper blade if this input indicates that the liftgate flip-up glass is ajar. The BCM reads the switch status through an internal pull-up, then sends the proper switch status messages to other electronic modules over the Programmable Communications Interface (PCI) data bus network. The liftgate flip-up glass ajar switch status message is used by the BCM as an input for Vehicle Theft Security System (VTSS) operation.

OPERATION - LIFTGATE AJAR SWITCH

Each of the liftgate ajar switches can close a path to ground for the BCM when the liftgate is opened, and opens the ground path when the liftgate is closed. The BCM reads the switch status through an internal pull-up, then sends the proper switch status messages to other electronic modules over the Programmable Communications Interface (PCI) data bus network. The liftgate ajar switch status message is used by the BCM as an input for Vehicle Theft Security System (VTSS) operation.

OPERATION - DRIVER DOOR AJAR SWITCH

The driver door ajar switch closes a path to ground for the DDM when the driver side front door is opened, and opens the ground path when the driver side front door is closed. The DDM reads the switch status through an internal pull-up, then sends the proper switch status messages to other electronic modules over the Programmable Communications Interface (PCI) data bus network. The driver door ajar switch status message is used by the Body Control Module (BCM) as an input for chime warning system operation.

DIAGNOSIS AND TESTING - DOOR AJAR SWITCH

The following diagnosis and testing is only for the chime functions. For interior lamp diagnosis, refer to the appropriate wiring information. The driver door ajar switch is hard wired to the Driver Door Module (DDM). The DDM communicates the switch status to the other electronic modules in the vehicle on the Programmable Communications Interface (PCI) data bus network. Be certain that the PCI data bus is functional before attempting diagnosis of the driver door ajar switch. A simple test to confirm PCI data bus operation is to operate the passenger side power mirror. If the passenger side power mirror does not operate, use a DRB scan tool and the proper Diagnostic Procedures manual to test the operation of the PCI data bus and the DDM. If the passenger side power mirror operates, the following test will diagnose a faulty driver door ajar switch and circuits. For complete circuit diagrams, refer to the appropriate wiring information. The wiring information includes wiring diagrams, proper wire and connector repair procedures, details of wire harness routing and retention, connector pin-out information and location views for the various wire harness connectors, splices and grounds.

DOOR AJAR SWITCH (Continued)

WARNING: ON VEHICLES EQUIPPED WITH AIRBAGS, REFER TO ELECTRICAL, RESTRAINTS BEFORE ATTEMPTING ANY STEERING WHEEL, STEERING COLUMN, OR INSTRUMENT PANEL COMPONENT DIAGNOSIS OR SERVICE. FAILURE TO TAKE THE PROPER PRECAUTIONS COULD RESULT IN ACCIDENTAL AIRBAG DEPLOYMENT AND POSSIBLE PERSONAL INJURY.

(1) Check that the interior lighting switch on the control stalk of the left multi-function switch is not in the dome lamp disable position. Open the driver side front door and note whether the interior lamps light. They should light. If OK, refer to Key-In Ignition Switch in the Diagnosis and Testing section of this group for further diagnosis of the chime warning system. If not OK, go to Step 2.

(2) Disconnect and isolate the battery negative cable. Remove the trim panel from the driver side front door and disconnect the 4-way door wire harness connector from the front door latch connector receptacle. Check for continuity between the ground circuit cavity of the 4-way door wire harness connector for the front door latch and a good ground. There should be continuity. If OK, go to Step 3. If not OK, repair the ground circuit to ground as required.

(3) Disconnect the white 15-way door wire harness connector from the Driver Door Module (DDM) connector receptacle. Check for continuity between the driver door ajar switch sense circuit of the white 15-way door wire harness connector for the DDM and a good ground. There should be no continuity. If OK, go to Step 4. If not OK, repair the shorted driver door ajar switch sense circuit as required.

(4) Check for continuity between the driver door ajar switch sense circuit cavities of the white 15-way door wire harness connector for the DDM and the 4-way door wire harness connector for the front door latch. There should be continuity. If OK, go to Step 5. If not OK, repair the open driver door ajar switch sense circuit as required.

(5) Check for continuity between the ground circuit terminal and the driver door ajar switch sense circuit terminal of the front door latch connector receptacle. There should be continuity with the driver side front door open, and no continuity with the door closed. If OK, use a DRB scan tool and the proper Diagnostic Procedures manual to test the operation of the PCI data bus and the DDM. If not OK, replace the faulty driver side front door latch unit.

GLOVE BOX LAMP/SWITCH

REMOVAL

WARNING: ON VEHICLES EQUIPPED WITH AIRBAGS, REFER TO ELECTRICAL, RESTRAINTS BEFORE ATTEMPTING ANY STEERING WHEEL, STEERING COLUMN, OR INSTRUMENT PANEL COMPONENT DIAGNOSIS OR SERVICE. FAILURE TO TAKE THE PROPER PRECAUTIONS COULD RESULT IN ACCIDENTAL AIRBAG DEPLOYMENT AND POSSIBLE PERSONAL INJURY.

(1) Disconnect and isolate the battery negative cable.

(2) Roll down the glove box from the instrument panel.(Refer to 23 - BODY/INSTRUMENT PANEL/GLOVE BOX - REMOVAL) for the procedures.

(3) Remove the lower right center bezel from the instrument panel.(Refer to 23 - BODY/INSTRUMENT PANEL - REMOVAL) for the procedures.

(4) Reach through the glove box opening and behind the glove box opening upper reinforcement in the instrument panel to access and depress the retaining latches on the top and bottom of the glove box lamp and switch housing.

(5) While holding the retaining latches depressed, push the glove box lamp and switch out through the mounting hole in the instrument panel glove box opening upper reinforcement (Fig. 1).

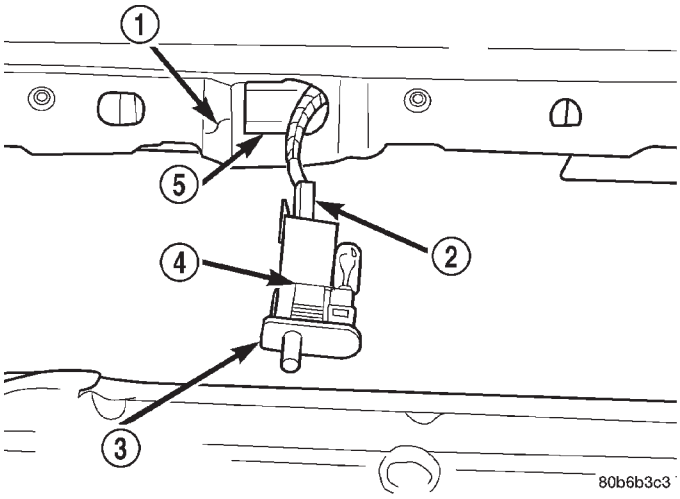

Fig. 1 Glove Box Lamp and Switch Remove/Install

1 - GLOVE BOX OPENING UPPER REINFORCEMENT
2 - WIRE HARNESS CONNECTOR
3 - GLOVE BOX LAMP & SWITCH
4 - LATCH
5 - MOUNTING HOLE

GLOVE BOX LAMP/SWITCH (Continued)

(6) Pull the glove box lamp and switch out from the mounting hole far enough to access the wire harness connector.

(7) Disconnect the instrument panel wire harness connector from the glove box lamp and switch connector receptacle.

(8) Remove the glove box lamp and switch from the instrument panel.

INSTALLATION

WARNING: ON VEHICLES EQUIPPED WITH AIRBAGS, REFER TO ELECTRICAL, RESTRAINTS BEFORE ATTEMPTING ANY STEERING WHEEL, STEERING COLUMN, OR INSTRUMENT PANEL COMPONENT DIAGNOSIS OR SERVICE. FAILURE TO TAKE THE PROPER PRECAUTIONS COULD RESULT IN ACCIDENTAL AIRBAG DEPLOYMENT AND POSSIBLE PERSONAL INJURY.

(1) Position the glove box lamp and switch to the instrument panel.

(2) Reconnect the instrument panel wire harness connector to the glove box lamp and switch connector receptacle.

(3) Feed the instrument panel wire harness back into the glove box lamp and switch mounting hole in the glove box opening upper reinforcement.

(4) Align the glove box lamp and switch housing with the mounting hole in the instrument panel glove box opening upper reinforcement.

(5) Push the glove box lamp and switch into the mounting hole in the instrument panel glove box opening upper reinforcement until the retaining latches are fully engaged.

(6) Install the lower right center bezel onto the instrument panel. (Refer to 23 - BODY/INSTRUMENT PANEL - INSTALLATION) for the procedures.

(7) Roll the glove box back up into the instrument panel.(Refer to 23 - BODY/INSTRUMENT PANEL/ GLOVE BOX - INSTALLATION) for the procedures.

(8) Reconnect the battery negative cable.

READING LAMP

DESCRIPTION

The overhead console in this vehicle is equipped with two individual reading and courtesy lamps. The lamp lenses are the only visible components of these lamps. The reading and courtesy lamp lenses are mounted near the rear of the overhead console housing. Each lamp has its own switch, bulb, reflector and lens; but both lamps share a common lamp housing within the overhead console.

The overhead console reading and courtesy lamps operate on battery current that is provided at all times, regardless of the ignition switch position. The ground feed for the lamps is switched through the integral reading and courtesy lamp switches or through the door jamb switches. Each lamp is designed and aimed to provide illumination that will be directed only to that side of the vehicle on which the lamp is located.

The reading and courtesy lamp lenses and the lamp housing and reflector unit are serviced only as a unit with the overhead console housing. If either of the lamp lenses or the lamp housing is faulty or damaged, the overhead console housing unit must be replaced. The reading and courtesy lamp switches, bulb holders and wiring are only available as part of the overhead console wire harness. If either of the lamp switches or bulb holders is faulty or damaged, the overhead console wire harness unit must be replaced.

For service of the reading and courtesy lamp bulbs, (Refer to 8 - ELECTRICAL/LAMPS/LIGHTING - INTERIOR/READING LAMP - REMOVAL). For diagnosis of the reading and courtesy lamps, refer to the appropriate wiring information. The wiring information includes wiring diagrams, proper wire and connector repair procedures, details of wire harness routing and retention, connector pin-out information and location views for the various wire harness connectors, splices and grounds.

OPERATION

All reading and courtesy lamps located in the overhead console are activated by the door jamb switches. When all of the doors are closed, these lamps can be individually activated by depressing the corresponding lens. When any door is open, depressing the lamp lenses to activate the lamp switches will not turn the lamps off.

See the owner's manual in the vehicle glove box for more information on the use and operation of the overhead console reading and courtesy lamps.

REMOVAL

(1) Remove the overhead console.

(2) Rotate the console until the bulb is visible (Fig. 2).

(3) Grasp the bulb and remove from the socket.

READING LAMP (Continued)

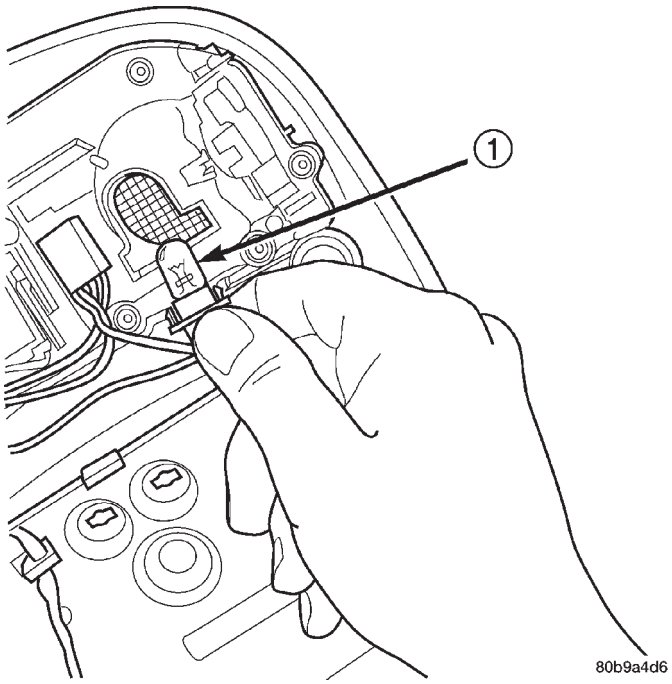

Fig. 2 Overhead Console Reading Lamp Bulb

1 - BULB

INSTALLATION

(1) Push the bulb into the bulb socket.

(2) Install the console on the headliner and roof panel.

(3) Align the screw hole and install the screw.

VANITY LAMP

REMOVAL

(1) Fold down visor.

(2) Using a small flat blade, and staring at the base of the lamp assembly, carefully pry the base of the lamp from the visor.

(3) Disconnect the vanity lamp visor and remove the lamp from the vehicle.

INSTALLATION

(1) Position the lamp at the visor and connect the wire connector.

(2) Press the lamp in place.

MESSAGE SYSTEMS

TABLE OF CONTENTS

page

OVERHEAD CONSOLE
DESCRIPTION 1
OPERATION 1
STANDARD PROCEDURE 2
ELECTRONIC VEHICLE INFORMATION 2
COMPASS DEMAGNETIZING 3
COMPASS CALIBRATION 4
COMPASS VARIATION ADJUSTMENT 4
REMOVAL 5
INSTALLATION 5
SPECIAL TOOLS 6
ELECTRONIC VEHICLE INFO CENTER
DESCRIPTION 6
OPERATION 8
DIAGNOSIS AND TESTING 8
DIAGNOSIS & TESTING ELECTRONIC VEHICLE INFORMATION CENTER 8
REMOVAL 9
INSTALLATION 9
UNIVERSAL TRANSMITTER
DESCRIPTION 10
OPERATION 10
DIAGNOSIS AND TESTING 10
UNIVERSAL GARAGE DOOR OPENER 10
AMBIENT TEMPERATURE SENSOR
DESCRIPTION 10
OPERATION 10
DIAGNOSIS AND TESTING 11
AMBIENT TEMPERATURE SENSOR 11
AMBIENT TEMPERATURE SENSOR CIRCUIT 11
REMOVAL 11
INSTALLATION 12

OVERHEAD CONSOLE

DESCRIPTION

An overhead console is standard factory-installed equipment on this model. The overhead console includes the Electronic Vehicle Information Center (EVIC) and two reading and courtesy lamps (Fig. 1). On vehicles equipped with a power sunroof option, the overhead console also houses the power sunroof switch between the two reading and courtesy lamps. The overhead console is mounted with one screw and two snap-clips to a molded plastic retainer bracket located above the headliner. The retainer bracket is secured with adhesive to the inside surface of the roof panel.

Following are general descriptions of the major components used in the overhead console. Refer to **Overhead Console** in Wiring Diagrams for complete circuit diagrams.

OPERATION

See the owner's manual in the vehicle glove box for more information on the use and operation of the various overhead console features.

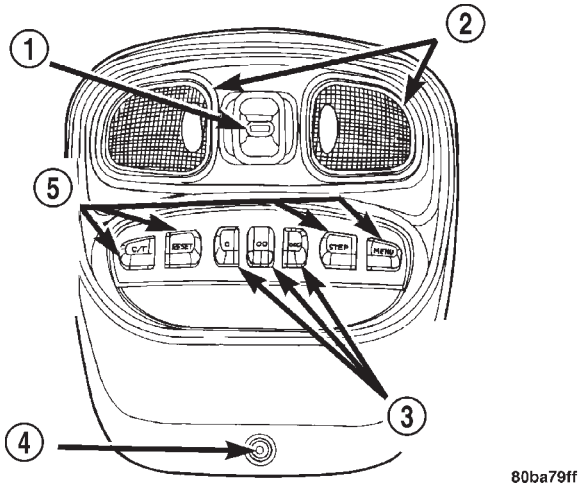

Fig. 1 Overhead Console

1 - POWER SUNROOF SWITCH (IF EQUIPPED)
2 - READING AND COURTESY LAMPS
3 - UNIVERSAL GARAGE DOOR OPENER PUSH BUTTONS (IF EQUIPPED)
4 - SCREW
5 - ELECTRONIC VEHICLE INFORMATION CENTER PUSH BUTTONS

OVERHEAD CONSOLE (Continued)

STANDARD PROCEDURE - ELECTRONIC VEHICLE INFORMATION CENTER PROGRAMMING

EVIC PROGRAMMING MODE

The Electronic Vehicle Information Center (EVIC) provides the vehicle operator with a user interface, which allows the selection of several optional customer programmable electronic features to suit individual preferences. The EVIC must be placed into its programming mode in order to view or change the programmable features. To enter the EVIC programming mode and to view or change the selected programmable features options, proceed as follows:

(1) Turn the ignition switch to the On position.

(2) Depress and release the Menu push button. The first item in the programmable features menu list will appear in the EVIC display.

(3) Momentarily depress and release the Menu push button to step through the programmable features list. Each programmable feature and its currently selected option will appear on the EVIC display in the sequence shown in the Programmable Features list that follows.

(4) Momentarily depress and release the Step push button to step through the available options for the programmable feature being displayed.

(5) The option that last appears in the display with a programmable feature before exiting the programming mode, becomes the newly selected programmable feature option.

(6) The EVIC exits the programming mode and returns to its normal operating mode when the C/T push button is depressed or when the end of the programmable features menu list is reached, whichever occurs first.

PROGRAMMABLE FEATURES

- **LANGUAGE?** - The options include English, Francaise, Deutsch, Italiana, or Espanol. The default is English. All EVIC display nomenclature, including the trip computer functions, warning messages and the programmable features appear in the selected language.
- **DISPLAY U.S. OR METRIC?** - The options include U.S. and M. The default is U.S. This feature toggles the trip computer temperature, fuel economy and odometer display readings between U.S. and metric units of measure. It also changes the odometer display in the instrument cluster.
- **AUTO DOOR LOCKS?** - The options include Yes and No. The default is Yes. When Yes is selected, all doors and the liftgate lock automatically when vehicle speed reaches 25 kilometers-per-hour (15 miles-per-hour). If YES is selected, a second programmable feature appears, **AUTO UNLOCK ON EXIT?** - The options again include Yes and No. The default is No. When Yes is selected, following each Auto Door Lock event all doors and the liftgate will automatically unlock when the driver door is opened, if the vehicle is stopped and the transmission gear selector is in Park or Neutral. The Auto Door Unlock event will only occur once following each Auto Door Lock event.
- **REMOTE UNLOCK** - The options include Driver Door 1st and All Doors. The default is Driver Door 1st. When Diver Door 1st is selected, only the driver door unlocks when the Unlock button of the Remote Keyless Entry (RKE) transmitter is depressed once. The Unlock button of the RKE transmitter must be depressed twice to unlock all doors and the liftgate. When All Doors is selected, all doors and the liftgate unlock when the Unlock button of the RKE transmitter is depressed once.
- **REMOTE LINKED TO MEMORY?** - This programmable feature only applies to vehicles equipped with the optional memory system. The options include Yes and No. The default is No. When Yes is selected, the memory system will recall the Driver 1 or Driver 2 memory settings assigned to the RKE transmitter being used to unlock the vehicle. When No is selected, the memory system will only recall memory settings when the Driver 1 or Driver 2 push buttons of the memory switch on the driver side front door trim panel are depressed.
- **SOUND HORN ON LOCK?** - The options include Yes and No. The default is No. When Yes is selected, a short horn chirp will provide an audible confirmation when the RKE receiver recognizes a valid Lock signal from an RKE transmitter. When No is selected, no horn chirp will occur with the RKE Lock event. This feature may be selected independent of the **FLASH LIGHTS WITH LOCKS?** programmable feature.
- **FLASH LIGHTS WITH LOCKS?** - The options include Yes and No. The default is Yes. When Yes is selected, a single flash of the hazard warning lamps will provide an optical confirmation when the RKE receiver recognizes a valid Lock signal from an RKE transmitter, and two flashes of the same lamps will occur when the RKE receiver recognizes a valid Unlock signal from an RKE transmitter. When No is selected, no lamp flash will occur with the RKE Lock or Unlock event. This feature may be selected independent of the **SOUND HORN ON LOCK?** programmable feature.
- **HEADLAMP DELAY =** - The options include Off, 30 Sec, 60 Sec, and 90 Sec. The default is 90 Sec. When a time interval is selected, the headlamps will remain on for that length of time when the headlamps are turned off after the ignition is turned off, or if the Auto mode is selected on vehicles with the

OVERHEAD CONSOLE (Continued)

Auto Headlamps option. When Off is selected, the headlamp delay feature is disabled.

- **HEADLAMPS ON WITH WIPERS?** - This programmable feature only applies to vehicles equipped with the optional Auto Headlamps. The options include Yes and No. The default is No. When Yes is selected, the headlamps will turn on automatically when the windshield wipers are turned on. The headlamps will turn off when the wipers are turned off, as long as the headlamp switch is in the Auto or Off positions. When No is selected, the headlamps will only turn on if manually selected or if the Auto mode is selected and the outside ambient light levels dictate that they should be on.
- **SERVICE INTV. =** - The options include from 1000 to 12000 kilometers in 1000 kilometer increments (2000 to 7500 miles in 500 mile increments). The default is 12000 kilometers (7500 miles). The selected distance becomes the interval at which the Perform Service warning message will be displayed by the EVIC. If a new distance is selected, a second programmable feature appears, **RESET SERVICE DISTANCE?** - The options include No and Yes. The default is Yes. When Yes is selected, the accumulated distance since the last previous Perform Service warning message will be reset to zero because the service interval has been changed. When No is selected, the distance until the next Perform Service warning message is reduced by the accumulated distance since the last previous message.
- **LOW FUEL CHIME?** - The options include Yes and No. The default is Yes. When Yes is selected, a single chime will sound as an audible alert whenever the instrument cluster low fuel warning lamp lights. The chime will sound only once per ignition cycle. When No is selected, only the low fuel warning lamp in the instrument cluster will light and no chime will sound.
- **EASY EXIT SEAT?** - This programmable feature only applies to vehicles equipped with the optional memory system. The options include Yes and No. The default is No. When Yes is selected, the driver seat moves rearward about 55 millimeters (two inches) or to the farthest rearward position, whichever comes first, when the key is removed from the ignition switch lock cylinder. This provides additional ease for exiting from the vehicle. The seat will automatically return to the memory system setting position when the Driver 1 or Driver 2 button of the memory switch on the door panel is depressed or, if the **REMOTE LINKED TO MEMORY** programmable feature is enabled, when the RKE Unlock button is depressed. While not automatic, an easy entry feature can be obtained by enabling the **EASY EXIT SEAT** feature and disabling the **REMOTE LINKED TO MEMORY** feature. Then the **EASY EXIT SEAT** feature will move the seat back, but the RKE unlock event will not reposition the seat. Thus, the seat remains positioned for easy entry, and the memory switch on the door panel can be depressed after entering the vehicle to return the seat to the desired memory position.

STANDARD PROCEDURE - COMPASS DEMAGNETIZING

A degaussing tool (Special Tool 6029) is used to demagnetize, or degauss, the overhead console forward mounting screw and the roof panel above the overhead console. Equivalent units must be rated as continuous duty for 110/115 volts and 60 Hz. They must also have a field strength of over 350 gauss at 7 millimeters (0.25 inch) beyond the tip of the probe.

To demagnetize the roof panel and the overhead console forward mounting screw, proceed as follows:

(1) Be certain that the ignition switch is in the Off position, before you begin the demagnetizing procedure.

(2) Connect the degaussing tool to an electrical outlet, while keeping the tool at least 61 centimeters (2 feet) away from the compass unit.

(3) Slowly approach the head of the overhead console forward mounting screw with the degaussing tool connected.

(4) Contact the head of the screw with the plastic coated tip of the degaussing tool for about two seconds.

(5) With the degaussing tool still energized, slowly back it away from the screw. When the tip of the tool is at least 61 centimeters (2 feet) from the screw head, disconnect the tool.

(6) Place a piece of paper approximately 22 by 28 centimeters (8.5 by 11 inches), oriented on the vehicle lengthwise from front to rear, on the center line of the roof at the windshield header (Fig. 2). The purpose of the paper is to protect the roof panel from scratches, and to define the area to be demagnetized.

(7) Connect the degaussing tool to an electrical outlet, while keeping the tool at least 61 centimeters (2 feet) away from the compass unit.

(8) Slowly approach the center line of the roof panel at the windshield header, with the degaussing tool connected.

(9) Contact the roof panel with the plastic coated tip of the degaussing tool. Be sure that the template is in place to avoid scratching the roof panel. Using a slow, back-and-forth sweeping motion, and allowing 13 millimeters (0.50 inch) between passes, move the tool at least 11 centimeters (4 inches) to each side of the roof center line, and 28 centimeters (11 inches) back from the windshield header.

(10) With the degaussing tool still energized, slowly back it away from the roof panel. When the

OVERHEAD CONSOLE (Continued)

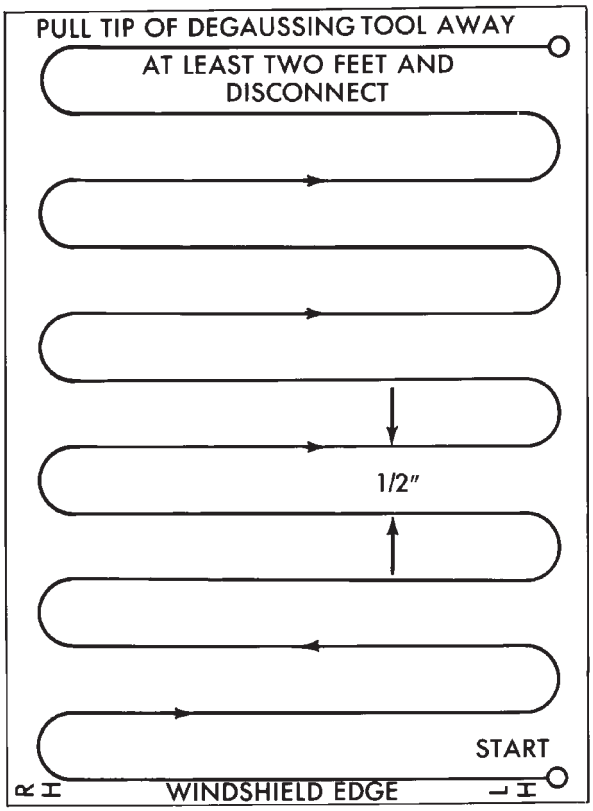

J908E-27

Fig. 2 Roof Demagnetizing Pattern

tip of the tool is at least 61 centimeters (2 feet) from the roof panel, disconnect the tool.

(11) Calibrate the compass and adjust the compass variance. Refer to **Compass Variation Adjustment** and **Compass Calibration** in the Service Procedures section of this group for the procedures.

STANDARD PROCEDURE - COMPASS CALIBRATION

CAUTION: Do not place any external magnets, such as magnetic roof mount antennas, in the vicinity of the compass. Do not use magnetic tools when servicing the overhead console.

The electronic compass unit features a self-calibrating design, which simplifies the calibration procedure. This feature automatically updates the compass calibration while the vehicle is being driven. This allows the compass unit to compensate for small changes in the residual magnetism that the vehicle may acquire during normal use. If the compass readings appear to be erratic or out of calibration, perform the following calibration procedure. Also, new service replacement Electronic Vehicle Information Center (EVIC) modules must have their compass calibrated using this procedure. Do not attempt to calibrate the compass near large metal objects such as other vehicles, large buildings, or bridges; or, near overhead or underground power lines.

NOTE: Whenever the compass is calibrated manually, the variance number must also be reset. Refer to Compass Variation Adjustment in this group.

Calibrate the compass manually as follows:

(1) Turn the ignition switch to the On position. If the compass/thermometer data is not currently being displayed, momentarily depress and release the C/T push button to reach the compass/thermometer display.

(2) Depress the Reset push button and hold the button down until “CAL” appears in the display. This takes about ten seconds, and appears about five seconds after “VARIANCE = XX” is displayed.

(3) Release the Reset push button.

(4) Drive the vehicle on a level surface, away from large metal objects and power lines, through three or more complete circles at between five and eight kilometers-per-hour (three and five miles-per-hour) in not less than 48 seconds. The “CAL” message will disappear from the display to indicate that the compass is now calibrated.

NOTE: If the “CAL” message remains in the display, either there is excessive magnetism near the compass, or the unit is faulty. Repeat the calibration procedure one more time.

NOTE: If the wrong direction is still indicated in the compass display, the area selected for calibration may be too close to a strong magnetic field. Repeat the calibration procedure in another location.

STANDARD PROCEDURE - COMPASS VARIATION ADJUSTMENT

Compass variance, also known as magnetic declination, is the difference in angle between magnetic north and true geographic north. In some geographic locations, the difference between magnetic and geographic north is great enough to cause the compass to give false readings. If this problem occurs, the compass variance setting may need to be changed.

To set the compass variance:

(1) Using the Variance Settings map, find your geographic location and note the zone number (Fig. 3).

(2) Turn the ignition switch to the On position. If the compass/thermometer data is not currently being displayed, momentarily depress and release the C/T push button to reach the compass/thermometer display.

OVERHEAD CONSOLE (Continued)

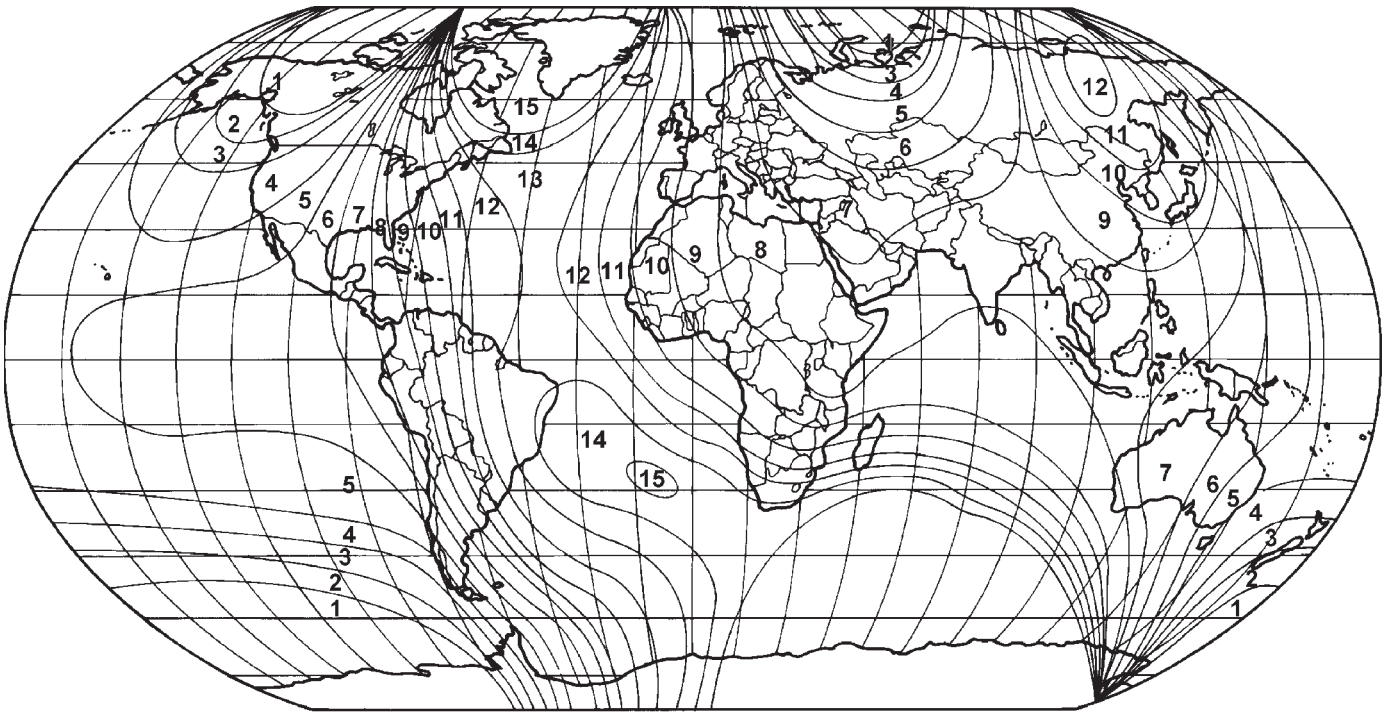

Fig. 3 Variance Settings

(3) Depress the Reset push button and hold the button down until “VARIANCE = XX” appears in the display. This takes about five seconds.

(4) Release the Reset push button. “VARIANCE =XX ” will remain in the display. “XX” equals the current variance zone setting.

(5) Momentarily depress and release the Step push button to step through the zone numbers, until the zone number for your geographic location appears in the display.

(6) Momentarily depress and release the Reset push button to enter the displayed zone number into the EVIC module memory.

(7) Confirm that the correct directions are now indicated by the compass.

REMOVAL

(1) Disconnect and isolate the battery negative cable.

(2) Remove the screw that secures the front of the overhead console to the front of the overhead console retainer bracket.

(3) Insert the fingertips of both hands between the headliner and the sides of the overhead console housing in the area near the reading and courtesy lamps.

(4) Pull downward on the sides of the overhead console housing firmly and evenly to disengage the two snap clips that secure the rear of the unit from their receptacles in the overhead console retainer bracket.

(5) Lower the overhead console from the headliner far enough to access the wire harness connectors.

(6) Disconnect the roof wire harness connectors from the Electronic Vehicle Information Center connector receptacle, the reading and courtesy lamp wire harness connector and, if the vehicle is so equipped, from the back of the power sunroof switch.

(7) Remove the overhead console from the headliner.

INSTALLATION

(1) Position the overhead console near the mounting location on the headliner.

(2) Reconnect the roof wire harness connectors to the Electronic Vehicle Information Center connector receptacle, the reading and courtesy lamp wire harness connector and, if the vehicle is so equipped, to the back of the power sunroof switch.

(3) Align the two snap clips on the rear of the overhead console housing with their receptacles in the overhead console retainer bracket.

(4) Push upward firmly and evenly on the sides of the overhead console housing over both of the snap clip locations until each of the two snap clips is fully engaged with its receptacle in the overhead console retainer bracket.

(5) Install and tighten the screw that secures the front of the overhead console housing to the overhead console retainer bracket. Tighten the screw to 1.2 N·m (10 in. lbs.).

(6) Reconnect the battery negative cable.

SPECIAL TOOLS

OVERHEAD CONSOLE SYSTEMS

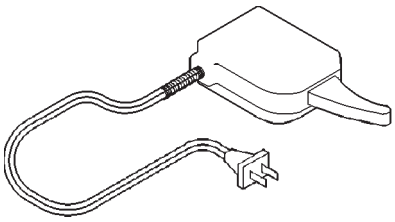

Degaussing Tool 6029

ELECTRONIC VEHICLE INFO CENTER

DESCRIPTION

The Electronic Vehicle Information Center (EVIC) is located in the overhead console on models equipped with this option. Two versions of the EVIC module are available on the Grand Cherokee. These two versions are identical except that the standard equipment unit for the Limited model includes an integral three-push button Universal Garage Door Opener (UGDO) transceiver. Both EVIC modules feature a large Vacuum Fluorescent Display (VFD) screen for displaying information, and four back-lit push button function switches labeled C/T (compass/thermometer), RESET, STEP, and MENU. The VFD screen can also display a vehicle graphic that is used for door and liftgate ajar indications and to show if a turn signal has been left on. The EVIC messages and displays are coordinated with warning indicators in the instrument cluster to avoid duplication.

The EVIC module contains a central processing unit and interfaces with other electronic modules in the vehicle over the Programmable Communications Interface (PCI) data bus network. The PCI data bus network allows the sharing of sensor information. This helps to reduce wire harness complexity, reduce internal controller hardware, and reduce component sensor current loads. At the same time, this system provides increased reliability, enhanced diagnostics, and allows the addition of many new feature capabilities.

The EVIC includes the features of the compass mini-trip computer used on prior Grand Cherokee models, including the following display options:

- **Compass and thermometer** - provides the outside temperature and one of eight compass readings to indicate the direction the vehicle is facing.
- **Average fuel economy** - shows the average fuel economy since the last trip computer reset.
- **Distance to empty** - shows the estimated distance that can be travelled with the fuel remaining in the fuel tank. This estimated distance is computed using the average miles-per-gallon from the last 30 gallons of fuel used.
- **Instant fuel economy** - shows the present fuel economy based upon the current vehicle distance and fuel used information.
- **Trip distance** - shows the distance travelled since the last trip computer reset.
- **Elapsed time** - shows the accumulated ignition-on time since the last trip computer reset.
- **Distance to service** - shows the distance remaining until the next scheduled service interval.
- **Blank screen** - the EVIC compass/thermometer/trip computer VFD is turned off.

The EVIC also includes many features not available with prior compass mini-trip computers. The EVIC is capable of displaying the following warning messages, which are accompanied by an audible announcement consisting of a series of beep tones:

- **TURN SIGNALS ON (with vehicle graphic)** - Indicates that a turn signal has remained on for about 1.6 kilometers (one mile) with no decrease in speed or throttle opening.
- **PERFORM SERVICE** - Indicates that a customer programmable service interval distance has been reached.
- **DOOR AJAR (one or more, with vehicle graphic)** - Indicates that a door is open or not fully closed.
- **LIFTGATE AJAR (with vehicle graphic)** - Indicates that the liftgate or the liftgate flip-up glass is open or not fully closed.
- **COOLANT LEVEL LOW (with vehicle graphic)** - Indicates that the coolant level in the engine coolant reservoir is low.
- **WASHER FLUID LOW (with vehicle graphic)** - Indicates that the fluid level in the washer fluid reservoir is low.

The EVIC “Menu” push button provides the vehicle operator with a user interface, which allows the selection of several optional customer programmable electronic features to suit individual preferences. Refer to **ELECTRONIC VEHICLE INFORMATION CENTER PROGRAMMING** in the Service Procedures section of this group for more information on the customer programmable feature options.

If the vehicle is equipped with the optional memory system, the EVIC will display the following memory system messages:

- **MEMORY #X POSITION SET (X = Driver 1 or Driver 2)** - This message appears in the EVIC display each time the memory system is successfully programmed. It is accompanied by an audible announcement chime tone.

ELECTRONIC VEHICLE INFO CENTER (Continued)

• **MEMORY SYSTEM DISABLED** - The memory system is automatically disabled while the driver side seat belt is fastened and/or while the automatic transmission gear selector is in any position except Park or Neutral. This message appears in the EVIC display as a reminder when a memory switch push button is depressed while the memory system is disabled. If the REMOTE LINKED TO MEMORY customer programmable feature has been selected, this message will also appear when the Unlock button of the Remote Keyless Entry (RKE) transmitter is depressed while the memory system is disabled.

If the vehicle is equipped with the optional Universal Garage Door Opener (UGDO) transceiver, the EVIC will also display messages and an icon indicating when the UGDO transceiver is being trained, which of the three transmitter buttons is transmitting, and when the transceiver is cleared.

Data input for all EVIC functions, including VFD dimming level, is received through PCI data bus messages. The EVIC module uses its internal programming and all of its data inputs to calculate and display the requested data. If the data displayed is incorrect, perform the self-diagnostic tests as described in this group. If these tests prove inconclusive, the use of a DRBIII® scan tool and the proper Diagnostic Procedures manual are recommended for further testing of the EVIC module and the PCI data bus.

The EVIC module cannot be repaired, and is available for service only as a unit. This unit includes the push button switches and the plastic module and display lens. If any of these components is faulty or damaged, the complete EVIC module must be replaced. The incandescent bulbs used for EVIC push button back-lighting are available for service replacement.

ELECTRONIC VEHICLE INFORMATION CENTER CHIME

The Electronic Vehicle Information Center (EVIC) uses the chime warning system for two different kinds of support. In addition to requesting chime tones from the Body Control Module (BCM) as tactile beep support, the EVIC is programmed to send chime request messages over the Programmable Communications Interface (PCI) data bus when it detects the following conditions:

• **Door Ajar Warning** - A door is ajar above a critical speed [about 16 kilometers-per-hour (10 miles-per-hour) for the driver side front door, or about 5 kilometers-per-hour (3 miles-per-hour) for any other door].

• **Liftgate Ajar Warning** - The liftgate or liftgate flip-up glass is ajar above a critical speed [about 5 kilometers-per-hour (3 miles-per-hour)].

• **Low Coolant Level Warning** - The coolant level in the engine coolant reservoir is low.

• **Perform Service Alert** - An audible alert that a “Perform Service” reminder message is being displayed by the EVIC.

• **Turn Signal On Warning** - A turn signal remains on for about 1.6 kilometers (one mile) with no decrease in speed or throttle opening

• **Washer Fluid Low Warning** - The fluid level in the washer reservoir is low.

See the owner's manual in the vehicle glove box for more information on the features, use and operation of the EVIC. (Refer to 8 - ELECTRICAL/OVERHEAD CONSOLE/ELECTRONIC VEHICLE INFO CENTER - DESCRIPTION) for more information on the EVIC.

COMPASS

While in the compass/thermometer mode, the compass will display the direction in which the vehicle is pointed using the eight major compass headings (Examples: north is N, northeast is NE). The self-calibrating compass unit requires no adjusting in normal use. The only calibration that may prove necessary is to drive the vehicle in three complete circles at 5 to 8 kilometers-per-hour (3 to 5 miles-per-hour), on level ground, in not less than forty-eight seconds. This will reorient the compass unit to its vehicle.

The compass unit also will compensate for magnetism the body of the vehicle may acquire during normal use. However, avoid placing anything magnetic directly on the roof of the vehicle. Magnetic mounts for an antenna, a repair order hat, or a funeral procession flag can exceed the compensating ability of the compass unit if placed on the roof panel. Magnetic bit drivers used on the fasteners that hold the overhead console assembly to the roof header can also affect compass operation. If the vehicle roof should become magnetized, the demagnetizing and calibration procedures found in this group may be required to restore proper compass operation.

THERMOMETER

The thermometer displays the outside ambient temperature in whole degrees. The temperature display can be toggled from Fahrenheit to Celsius by selecting the desired U.S./Metric option from the customer programmable features as described in **ELECTRONIC VEHICLE INFORMATION CENTER PROGRAMMING** in the Service Procedures section of this group. The displayed temperature is not an instant reading of conditions, but an average temperature. It may take the thermometer display several minutes to respond to a major temperature change, such as driving out of a heated garage into winter temperatures.

ELECTRONIC VEHICLE INFO CENTER (Continued)

When the ignition switch is turned to the Off position, the last displayed temperature reading stays in the Body Control Module (BCM) unit memory. When the ignition switch is turned to the On position again, the EVIC will display the memory temperature for one minute; then update the display to the current average temperature reading within five minutes.

The thermometer function is supported by an ambient temperature sensor. The sensor is mounted outside the passenger compartment near the front and center of the vehicle, and is hard wired to the Body Control Module (BCM). The BCM sends temperature status messages to the EVIC module over the PCI data bus network. The ambient temperature sensor is available as a separate service item.

OPERATION

The EVIC has access to both non-switched and ignition switched sources of battery current so that some of its features remain operational at any time, while others may only operate with the ignition switch in the On position. When the ignition switch is turned to the On position, the EVIC module VFD will return to the last function being displayed before the ignition was turned to the Off position.

The compass/thermometer display is the normal EVIC display. With the ignition switch in the On position, momentarily depressing and releasing the C/T (compass/thermometer) push button switch will cause the EVIC to return to the compass/thermometer/trip computer display mode from any other mode. While in the compass/thermometer/trip computer display mode, momentarily depressing and releasing the Step push button will step through the available trip computer display options.

The EVIC trip computer features several functions that can be reset. The functions that can be reset are: average fuel economy, trip odometer and elapsed time. With the ignition switch in the On position and with one of the functions of the trip computer that can be reset currently displayed, depressing the Reset push button twice within three seconds will perform a global reset, and all of the trip computer information that can be reset will be reset to zero. With the ignition switch in the On position and the function that is to be reset currently displayed, momentarily depressing and releasing the Reset push button once will perform a local reset, and only the value of the displayed function will be reset to zero. A global or local reset will only occur if the function currently displayed is a function that can be reset. The distance to service function can also be reset using the local reset method, but it will reset back to the Service Interval distance that is set in the EVIC programmable features mode. Refer to **ELECTRONIC VEHICLE INFORMATION CENTER PROGRAMMING** in the Service Procedures section of this group for more information on setting the Service Interval.

For more information on the features, control functions and setting procedures for the EVIC module, see the owner's manual in the vehicle glove box.

DIAGNOSIS AND TESTING-ELECTRONIC VEHICLE INFORMATION CENTER

If the problem with the Electronic Vehicle Information Center (EVIC) is an "Open Circuit" or "Short Circuit" shown in the compass/thermometer display, refer to **Ambient Temperature Sensor** in the Diagnosis and Testing section of this group. If the problem with the EVIC is an inaccurate or scrambled display, refer to **Self-Diagnostic Test** in the Diagnosis and Testing section of this group. If the problem with the EVIC is incorrect Vacuum Fluorescent Display (VFD) dimming levels, use a DRB® scan tool and the proper Diagnostic Procedures manual to test for the correct dimming message inputs being received from the Body Control Module (BCM) over the Programmable Communications Interface (PCI) data bus. If the problem is a no-display condition, use the following procedures. For complete circuit diagrams, refer to **Overhead Console** in Wiring Diagrams.

(1) Check the fused B(+) fuse in the junction block. If OK, go to Step 2. If not OK, repair the shorted circuit or component as required and replace the faulty fuse.

(2) Check for battery voltage at the fused B(+) fuse in the junction block. If OK, go to Step 3. If not OK, repair the open fused B(+) circuit to the fused B(+) fuse in the PDC as required.

(3) Check the fused ignition switch output (run/start) fuse in the junction block. If OK, go to Step 4. If not OK, repair the shorted circuit or component as required and replace the faulty fuse.

(4) Turn the ignition switch to the On position. Check for battery voltage at the fused ignition switch output (run/start) fuse in the junction block. If OK, go to Step 5. If not OK, repair the open fused ignition switch output (run/start) circuit to the ignition switch as required.

(5) Turn the ignition switch to the Off position. Disconnect and isolate the battery negative cable. Remove the overhead console. Check for continuity between the ground circuit cavity of the roof wire harness connector for the EVIC module and a good ground. There should be continuity. If OK, go to Step 6. If not OK, repair the open ground circuit to ground as required.

(6) Connect the battery negative cable. Check for battery voltage at the fused B(+) circuit cavity of the roof wire harness connector for the EVIC module. If

ELECTRONIC VEHICLE INFO CENTER (Continued)

OK, go to Step 7. If not OK, repair the open fused B(+) circuit to the fused B(+) fuse in the junction block as required.

(7) Turn the ignition switch to the On position. Check for battery voltage at the fused ignition switch output (run/start) circuit cavity of the roof wire harness connector for the EVIC module. If OK, refer to **Self-Diagnostic Test** in the Diagnosis and Testing section of this group for further diagnosis of the EVIC module and the PCI data bus. If not OK, repair the open fused ignition switch output (run/start) circuit to the fuse in the junction block as required.

SELF-DIAGNOSTIC TEST

A self-diagnostic test is used to determine that the EVIC module is operating properly, and that all PCI data bus messages are being received for initial operation. Initiate the self-diagnostic test as follows:

(1) With the ignition switch in the Off position, simultaneously depress and hold the C/T button and the Reset button.

(2) Turn the ignition switch to the On position.

(3) Continue to hold both buttons depressed until the EVIC software version information is displayed, then release both buttons.

(4) Following completion of these tests, the EVIC module will display one of the following messages:

- **Pass Self Test** - Momentarily depress and release the Reset button to return to the compass/thermometer/trip computer display mode. The EVIC module is working properly.
- **Failed Self Test** - The EVIC module has an internal failure. The EVIC module is faulty and must be replaced.
- **Failed J1850 Communication** - The EVIC module is not receiving proper message input through the PCI data bus. This can result from one or more faulty electronic modules in the vehicle, or from a faulty PCI data bus. The use of a DRB scan tool and the proper Diagnostic Procedures manual are required for further diagnosis.

NOTE: If the compass functions, but accuracy is suspect, it may be necessary to perform a variation adjustment. This procedure allows the compass unit to accommodate variations in the earth's magnetic field strength, based on geographic location. Refer to Compass Variation Adjustment in the Standard Procedures section of this group.

NOTE: If the compass reading displays dashes, and only "CAL" appears in the display, demagnetizing may be necessary to remove excessive residual magnetic fields from the vehicle. Refer to Compass Demagnetizing in the Standard Procedures section of this group.

REMOVAL

(1) Disconnect and isolate the battery negative cable.

(2) Remove the overhead console from the headliner. Refer to **Overhead Console** in the Removal and Installation section of this group for the procedures.

(3) Remove the four screws that secure the Electronic Vehicle Information Center (EVIC) module to the overhead console housing (Fig. 4).

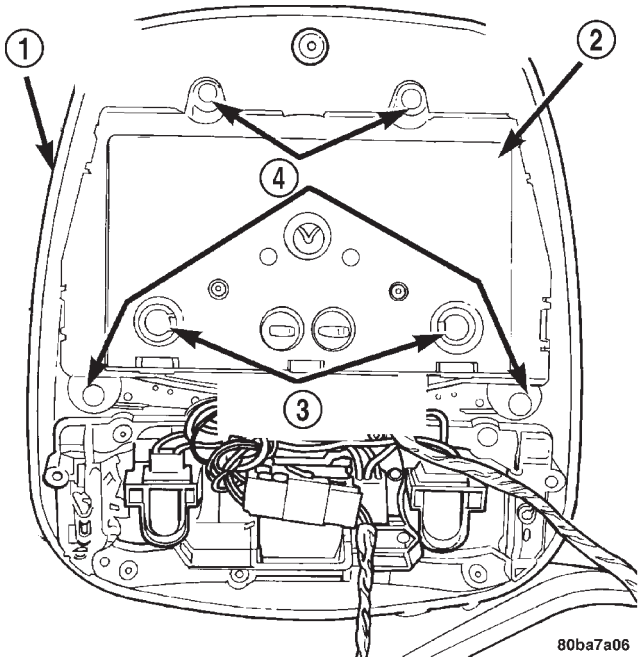

Fig. 4 Electronic

1 - OVERHEAD CONSOLE HOUSING
2 - EVIC MODULE
3 - ILLUMINATION LAMPS
4 - SCREWS (4)

(4) Remove the EVIC module from the overhead console housing.

INSTALLATION

(1) Position the EVIC module onto the overhead console housing.

(2) Install and tighten the four screws that secure the EVIC module to the overhead console housing. Tighten the screws to 0.9 N·m (8 in. lbs.).

(3) Install the overhead console onto the headliner. Refer to **Overhead Console** in the Removal and Installation section of this group for the procedures.

(4) Reconnect the battery negative cable.

NOTE: If a new compass mini-trip computer has been installed, the compass will have to be calibrated and the variance set. Refer to Compass Variation Adjustment and Compass Calibration in the Standard Procedures section of this group for the procedures.

UNIVERSAL TRANSMITTER

DESCRIPTION

The Grand Cherokee Limited model has a Universal Garage Door Opener (UGDO) transceiver as standard factory-installed equipment. The UGDO is optional on Laredo models. The UGDO transceiver is integral to the Electronic Vehicle Information Center (EVIC), which is located in the overhead console. The only visible component of the UGDO are the three transmitter push buttons centered between the four EVIC push buttons located just rearward of the EVIC display screen in the overhead console. The three UGDO transmitter push buttons are identified with one, two or three raised tactile bumps so that they be easily identified by sight or by feel.

Each of the three UGDO transmitter push buttons controls an independent radio transmitter channel. Each of these three channels can be trained to transmit a different radio frequency signal for the remote operation of garage door openers, motorized gate openers, home or office lighting, security systems or just about any other device that can be equipped with a radio receiver in the 286 to 399 MegaHertz (MHz) frequency range for remote operation. The UGDO is capable of operating systems using either rolling code or non-rolling code technology.

The EVIC module displays messages and a small house-shaped icon with one, two or three dots corresponding to the three transmitter buttons to indicate the status of the UGDO. The EVIC messages are:

- **Cleared Channels** - Indicates that all of the transmitter codes stored in the UGDO have been successfully cleared.
- **Training** - Indicates that the UGDO is in its transmitter learning mode.
- **Trained** - Indicates that the UGDO has successfully acquired a new transmitter code.
- **Transmit** - Indicates that a trained UGDO transmitter button has been depressed and that the UGDO is transmitting.

The UGDO cannot be repaired, and is available for service only as a unit with the EVIC module. This unit includes the push button switches and the plastic module and display lens. If any of these components is faulty or damaged, the complete EVIC module must be replaced.

OPERATION

The UGDO operates on a non-switched source of battery current so the unit will remain functional, regardless of the ignition switch position. For more information on the features, programming procedures and operation of the UGDO, see the owner's manual in the vehicle glove box.

DIAGNOSIS & TESTING - UNIVERSAL GARAGE DOOR OPENER

If the Universal Garage Door Opener (UGDO) is inoperative, but the Electronic Vehicle Information Center (EVIC) is operating normally, see the owner's manual in the vehicle glove box for instructions on training the UGDO. Retrain the UGDO with a known good transmitter as instructed in the owner's manual and test the UGDO operation again. If the unit is still inoperative, replace the faulty UGDO and EVIC module as a unit. If both the UGDO and the EVIC module are inoperative, refer to **Electronic Vehicle Information Center** in the Diagnosis and Testing section of this group for further diagnosis. For complete circuit diagrams, refer to **Overhead Console** in Wiring Diagrams.

AMBIENT TEMPERATURE SENSOR

DESCRIPTION

Ambient air temperature is monitored by the Electronic Vehicle Information Center (EVIC) through ambient temperature messages received from the Body Control Module (BCM) over the Programmable Communications Interface (PCI) data bus network. The BCM receives a hard wired input from the ambient temperature sensor. The ambient temperature sensor is a variable resistor mounted to a bracket that is secured with a screw to the right side of the headlamp mounting module grille opening, behind the radiator grille and in front of the engine compartment.

Refer to **Body Control Module** in Electronic Control Modules. For complete circuit diagrams, refer to the appropriate wiring information. The ambient temperature sensor cannot be adjusted or repaired and, if faulty or damaged, it must be replaced.

OPERATION

The ambient temperature sensor is a variable resistor that operates on a five-volt reference signal sent to it by the BCM. The resistance in the sensor changes as temperature changes, changing the temperature sensor signal circuit voltage to the BCM. Based upon the resistance in the sensor, the BCM senses a specific voltage on the temperature sensor signal circuit, which it is programmed to correspond to a specific temperature. The BCM then sends the proper ambient temperature messages to the EVIC over the PCI data bus.

The thermometer function is supported by the ambient temperature sensor, a wiring circuit, the Body Control Module (BCM), the Programmable

AMBIENT TEMPERATURE SENSOR (Continued)

Communications Interface (PCI) data bus, and a portion of the Electronic Vehicle Information Center (EVIC) module. If any portion of the ambient temperature sensor circuit fails, the BCM will self-diagnose the circuit. A “Short Circuit” message will appear in the EVIC display in place of the temperature when the sensor is exposed to temperatures above 55° C (131° F), or if the sensor circuit is shorted. An “Open Circuit” message will appear in the EVIC display in place of the temperature when the sensor is exposed to temperatures below –40° C (–40° F), or if the sensor circuit is open.

The ambient temperature sensor circuit can also be diagnosed by referring to **Diagnosis and Testing - Ambient Temperature Sensor, and Diagnosis and Testing - Ambient Temperature Sensor Circuit**. If the temperature sensor and circuit are confirmed to be OK, but the temperature display is inoperative or incorrect, refer to **Diagnosis and Testing - Electronic Vehicle Information Center** in this group. For complete circuit diagrams, refer to the appropriate wiring information.

DIAGNOSIS AND TESTING - AMBIENT TEMPERATURE SENSOR

(1) Turn the ignition switch to the Off position. Disconnect and isolate the battery negative cable. Disconnect the ambient temperature sensor wire harness connector.

(2) Measure the resistance of the ambient temperature sensor. At –40° C (–40° F), the sensor resistance is 336 kilohms. At 55° C (140° F), the sensor resistance is 2.488 kilohms. The sensor resistance should read between these two values. If OK, refer to **Diagnosis and Testing - Ambient Temperature Sensor Circuit** in this group. If not OK, replace the faulty ambient temperature sensor.

DIAGNOSIS AND TESTING - AMBIENT TEMPERATURE SENSOR CIRCUIT

(1) Turn the ignition switch to the Off position. Disconnect and isolate the battery negative cable. Disconnect the ambient temperature sensor wire harness connector and the 22-way Body Control Module (BCM) wire harness connector.

(2) Connect a jumper wire between the two terminals in the body half of the ambient temperature sensor wire harness connector.

(3) Check for continuity between the sensor return circuit and the ambient temperature sensor signal circuit cavities of the 22-way BCM wire harness connector. There should be continuity. If OK, go to Step 4. If not OK, repair the open sensor return circuit or ambient temperature sensor signal circuit to the ambient temperature sensor as required.

(4) Remove the jumper wire from the body half of the ambient temperature sensor wire harness connector. Check for continuity between the sensor return circuit cavity of the 22-way BCM wire harness connector and a good ground. There should be no continuity. If OK, go to Step 5. If not OK, repair the shorted sensor return circuit as required.

(5) Check for continuity between the ambient temperature sensor signal circuit cavity of the 22-way BCM wire harness connector and a good ground. There should be no continuity. If OK, refer to **Diagnosis and Testing - Electronic Vehicle Information Center** in this group. If not OK, repair the shorted ambient temperature sensor signal circuit as required.

REMOVAL

(1) Disconnect and isolate the battery negative cable.

(2) Locate the ambient temperature sensor, on the right side of the radiator opening in the headlamp mounting module, behind the grille (Fig. 5).

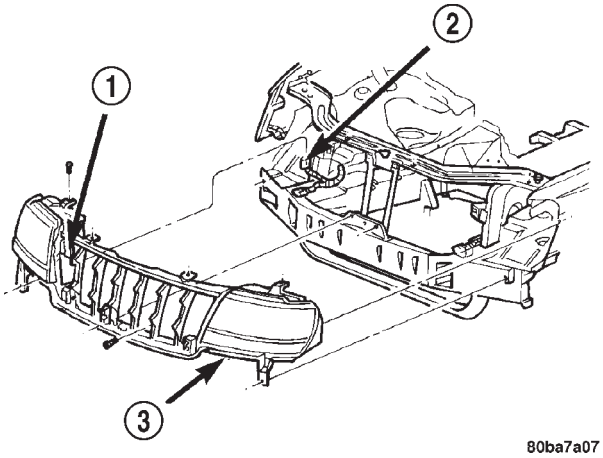

Fig. 5 AMBIENT TEMPERATURE SENSOR

1 - AMBIENT TEMPERATURE SENSOR
2 - WIRE HARNESS CONNECTOR
3 - HEADLAMP MOUNTING MODULE

(3) Remove the radiator grille fascia and insert from the headlamp mounting module. Refer to Body for the procedures.

(4) Disconnect the wire harness connector from the ambient temperature sensor connector receptacle.

(5) Remove the one screw that secures the ambient temperature sensor bracket to the headlamp mounting module.

(6) Remove the ambient temperature sensor from the headlamp mounting module.

AMBIENT TEMPERATURE SENSOR (Continued)

INSTALLATION

(1) Position the ambient temperature sensor onto the radiator yoke.

(2) Install and tighten the one screw that secures the ambient temperature sensor bracket to the radiator yoke. Tighten the screw to 2.2 N·m (20 in. lbs.).

(3) Reconnect the wire harness connector to the ambient temperature sensor connector receptacle.

(4) Install the radiator grille fascia and insert onto the headlamp mounting module. Refer to Body for the procedures.

(5) Reconnect the battery negative cable.

POWER SYSTEMS

TABLE OF CONTENTS

page

POWER LOCKS 1
POWER MIRRORS 10
POWER SEATS 17
POWER WINDOWS 32

POWER LOCKS

TABLE OF CONTENTS

page

POWER LOCKS
DESCRIPTION 1
OPERATION 4
DIAGNOSIS AND TESTING 5
POWER LOCK SYSTEM. 5
REMOTE KEYLESS ENTRY SYSTEM 6
LIFTGATE FLIP-UP GLASS POWER RELEASE SYSTEM. 6
DOOR CYLINDER LOCK / UNLOCK SWITCH
DESCRIPTION 7
OPERATION 7
POWER LOCK MOTOR
DESCRIPTION 7
OPERATION 7
DIAGNOSIS AND TESTING 7
POWER LOCK MOTOR 7
REMOTE KEYLESS ENTRY TRANSMITTER
DESCRIPTION 8
OPERATION 8
DIAGNOSIS AND TESTING 8
REMOTE KEYLESS ENTRY TRANSMITTER. . . . 8
STANDARD PROCEDURE 8
RKE TRANSMITTER PROGRAMMING 8
RKE TRANSMITTER BATTERIES 8
POWER LOCK SWITCH
DESCRIPTION 9
OPERATION 9
REMOTE KEYLESS ENTRY MODULE
DESCRIPTION 9
OPERATION 9

POWER LOCKS

DESCRIPTION - POWER LOCK SYSTEM

A power operated door and liftgate lock system is standard factory-installed equipment on this model. The power lock system allows all of the doors and the liftgate to be locked or unlocked electrically by operating a switch on either front door trim panel. The power lock system receives non-switched battery current through a fuse in the Power Distribution Center (PDC), so that the power locks remain operational, regardless of the ignition switch position.

The power lock system for this vehicle also has a door lock inhibit feature, which prevents the power lock system from being energized with a power door lock switch if a front door is open with the key in the ignition and/or the exterior lamps are on. However, the locks can still be operated manually, with a key or energized with the RKE transmitter.

This vehicle also offers several customer programmable features, which allows the selection of several optional electronic features to suit individual preferences. (Refer to 8 - ELECTRICAL/OVERHEAD CONSOLE/ELECTRONIC VEHICLE INFO CENTER - DESCRIPTION). Customer programmable feature options affecting the power door lock system include:

- **Auto Door Locks** - Automatically locks all of the vehicle doors and the liftgate when the vehicle reaches a speed of about 24 kilometers-per-hour (15 miles-per-hour).
- **Auto Unlock on Exit** - Automatically unlocks all of the vehicle doors and the liftgate when the driver side front door is opened, if the vehicle is stopped and the transmission gear selector is in the Park or Neutral positions. This feature is linked to the Auto Door Locks feature, and will only occur one time following each Auto Door Lock event.

The power lock system for this vehicle can also be operated remotely using the standard equipment

POWER LOCKS (Continued)

Remote Keyless Entry (RKE) system radio frequency transmitters. (Refer to 8 - ELECTRICAL/POWER LOCKS - DESCRIPTION - REMOTE KEYLESS ENTRY SYSTEM).

The components of the power lock system include:

- **Driver Door Module (DDM)**
- **Passenger Door Module (PDM)**
- **Power Lock Motors**

Certain functions and features of the power lock system rely upon resources shared with other electronic modules in the vehicle over the Programmable Communications Interface (PCI) data bus network. The PCI data bus network allows the sharing of sensor information. This helps to reduce wire harness complexity, internal controller hardware, and component sensor current loads. At the same time, this system provides increased reliability, enhanced diagnostics, and allows the addition of many new feature capabilities. For proper diagnosis of these electronic modules or of the PCI data bus network, the use of a DRBIII® scan tool and the appropriate diagnostic information are required.

The other electronic modules that may affect power lock system operation are as follows:

- **Body Control Module (BCM)** - (Refer to 8 - ELECTRICAL/ELECTRONIC CONTROL MODULES/BODY CONTROL/CENTRAL TIMER MODULE - DESCRIPTION).
- **Electronic Vehicle Information Center (EVIC)** - (Refer to 8 - ELECTRICAL/OVERHEAD CONSOLE/ELECTRONIC VEHICLE INFO CENTER - DESCRIPTION).
- **Powertrain Control Module (PCM)** - (Refer to 8 - ELECTRICAL/ELECTRONIC CONTROL MODULES/POWERTRAIN CONTROL MODULE - DESCRIPTION).

Hard wired circuitry connects the power lock system components to the electrical system of the vehicle. These hard wired circuits are integral to several wire harnesses, which are routed throughout the vehicle and retained by many different methods. These circuits may be connected to each other, to the vehicle electrical system and to the power lock system components through the use of a combination of soldered splices, splice block connectors, and many different types of wire harness terminal connectors and insulators. Refer to the appropriate wiring information. The wiring information includes wiring diagrams, proper wire and connector repair procedures, further details on wire harness routing and retention, as well as pin-out and location views for the various wire harness connectors, splices and grounds.

DESCRIPTION - REMOTE KEYLESS ENTRY SYSTEM

A Radio Frequency (RF) type Remote Keyless Entry (RKE) system is standard factory-installed equipment on this model. The RKE system allows the use of a remote battery-powered radio transmitter to control the power lock system. The RKE receiver operates on non-switched battery current through a fuse in the Power Distribution Center (PDC), so that the system remains operational, regardless of the ignition switch position.

In addition to Lock and Unlock buttons, the RKE transmitters are also equipped with a Panic button. If the Panic button on the RKE transmitter is depressed, the horn will sound and the exterior lights will flash on the vehicle for about three minutes, or until the Panic button is depressed a second time. A vehicle speed of about 24 kilometers-per-hour (15 miles-per-hour) will also cancel the panic event.

The RKE system can also perform other functions on this vehicle. If the vehicle is equipped with the optional Vehicle Theft Security System (VTSS), the RKE transmitter will arm the VTSS when the Lock button is depressed, and disarm the VTSS when the Unlock button is depressed. (Refer to 8 - ELECTRICAL/VEHICLE THEFT SECURITY - DESCRIPTION - VEHICLE THEFT SECURITY SYSTEM). If the vehicle is equipped with the optional Memory System, each of the two numbered and color-coded RKE transmitters can be used to recall the stored driver side front seat position, both outside power rear view mirror positions, and the radio station presets for the two assigned drivers. (Refer to 8 - ELECTRICAL/POWER SEATS - DESCRIPTION - MEMORY SYSTEM).

The RKE system includes two transmitters when the vehicle is shipped from the factory, but the system can retain the vehicle access codes of up to four transmitters. The transmitter codes are retained in the RKE receiver memory, even if the battery is disconnected. If an RKE transmitter is faulty or lost, new transmitter vehicle access codes can be programmed into the system using a DRBIII® scan tool and the appropriate diagnostic information.

This vehicle also offers several customer programmable features, which allows the selection of several optional electronic features to suit individual preferences. (Refer to 8 - ELECTRICAL/OVERHEAD CONSOLE/ELECTRONIC VEHICLE INFO CENTER - DESCRIPTION). Customer programmable feature options affecting the RKE system include:

- **Remote Unlock** - Allows the option of having only the driver side front door unlock when the RKE transmitter Unlock button is depressed the first time and the remaining doors and the liftgate unlock when the button is depressed a second time, or having all doors and the liftgate unlock upon the first depression of the RKE transmitter Unlock button.

POWER LOCKS (Continued)

- **Remote Linked to Memory** - If the vehicle is equipped with the Memory System, this feature allows the option of having the RKE transmitter Unlock button activate the recall of the stored settings, or having the recall function assigned solely to the memory switch on the driver side front door trim panel.
- **Sound Horn on Lock** - Allows the option of having the horn sound a short chirp as an audible verification that the RKE system received a valid Lock request from the RKE transmitter, or having no audible verification.
- **Flash Lights with Lock** - Allows the option of having the lights flash as an optical verification that the RKE system received a valid Lock request or Unlock request from the RKE transmitter, or having no optical verification.

This group covers the following components of the RKE system:

- **RKE Receiver**
- **RKE Transmitter**

Certain functions and features of the RKE system rely upon resources shared with other electronic modules in the vehicle over the Programmable Communications Interface (PCI) data bus network. The PCI data bus network allows the sharing of sensor information. This helps to reduce wire harness complexity, internal controller hardware, and component sensor current loads. At the same time, this system provides increased reliability, enhanced diagnostics, and allows the addition of many new feature capabilities. For diagnosis of these electronic modules or of the PCI data bus network, the use of a DRBIII® scan tool and the appropriate diagnostic information are required.

The other electronic modules that may affect RKE system operation are as follows:

- **Body Control Module (BCM)** - (Refer to 8 - ELECTRICAL/ELECTRONIC CONTROL MODULES/BODY CONTROL/CENTRAL TIMER MODULE - DESCRIPTION).
- **Driver Door Module (DDM)** - (Refer to 8 - ELECTRICAL/ELECTRONIC CONTROL MODULES/DOOR MODULE - DESCRIPTION).
- **Electronic Vehicle Information Center (EVIC)** - (Refer to 8 - ELECTRICAL/OVERHEAD CONSOLE/ELECTRONIC VEHICLE INFO CENTER - DESCRIPTION).
- **Passenger Door Module (PDM)** - (Refer to 8 - ELECTRICAL/ELECTRONIC CONTROL MODULES/DOOR MODULE - DESCRIPTION).
- **Powertrain Control Module (PCM)** - (Refer to 8 - ELECTRICAL/ELECTRONIC CONTROL MODULES/POWERTRAIN CONTROL MODULE - DESCRIPTION).

Hard wired circuitry connects the RKE system components to the electrical system of the vehicle. These hard wired circuits are integral to several wire harnesses, which are routed throughout the vehicle and retained by many different methods. These circuits may be connected to each other, to the vehicle electrical system and to the RKE system components through the use of a combination of soldered splices, splice block connectors, and many different types of wire harness terminal connectors and insulators. Refer to the appropriate wiring information. The wiring information includes wiring diagrams, proper wire and connector repair procedures, further details on wire harness routing and retention, as well as pin-out and location views for the various wire harness connectors, splices and grounds.

COMBINATION FLASHER

The combination flasher is a smart relay that functions as both the turn signal system and the hazard warning system flasher. The combination flasher contains active electronic Integrated Circuitry (IC) elements. This flasher can be energized by the BCM to flash all of the park/turn signal/front side marker lamps as an optical alert for the RKE panic function and, if the Flash Lights with Lock programmable feature is enabled, as an optical verification for the RKE lock event. (Refer to 8 - ELECTRICAL/LAMPS/LIGHTING - EXTERIOR/COMBINATION FLASHER - DESCRIPTION).

HORN RELAY

The horn relay is a electromechanical device that switches battery current to the horn when the horn switch grounds the relay coil. The horn relay is located in the Power Distribution Center (PDC) in the engine compartment. This relay can be energized by the BCM to sound the horns as an audible alert for the RKE panic function and, if the Sound Horn on Lock programmable feature is enabled, as an audible verification for the RKE lock event. (Refer to 8 - ELECTRICAL/HORN/HORN RELAY - DESCRIPTION).

LOW BEAM HEADLAMP RELAY

The low beam headlamp relay is a electromechanical device that switches battery current to the headlamp low beams when the BCM grounds the relay coil. The low beam headlamp relay is located in the junction block in the passenger compartment. This relay can be energized by the BCM to flash the headlamp low beams as an optical alert for the RKE panic function. (Refer to 8 - ELECTRICAL/LAMPS/LIGHTING - EXTERIOR/HEADLAMP - DESCRIPTION).

POWER LOCKS (Continued)

DESCRIPTION - LIFTGATE FLIP-UP GLASS POWER RELEASE SYSTEM

A power operated liftgate flip-up glass release system is standard factory installed equipment on this model. The liftgate flip-up glass power release system allows the flip-up glass latch to be released electrically by depressing a switch located on the bottom of the liftgate license plate lamp housing unit, above the license plate on the outside of the liftgate.

The liftgate flip-up glass release system operates on non-switched battery current supplied through a fuse in the junction block so that the system remains functional, regardless of the ignition switch position. However, a limit switch that is integral to the liftgate latch actuator unit opens to prevent the flip-up glass latch from being actuated when the liftgate latch is locked.

The liftgate flip-up glass power release system includes the following components:

- **Liftgate Flip-Up Glass Limit Switch** - The liftgate flip-up glass limit switch is integral to the liftgate latch unit. (Refer to 23 - BODY/DECKLID/HATCH/LIFTGATE/TAILGATE/LATCH - REMOVAL) and (Refer to 23 - BODY/DECKLID/HATCH/LIFTGATE/TAILGATE/LATCH - INSTALLATION).
- **Liftgate Flip-Up Glass Release Motor** - The liftgate flip-up glass release motor is integral to the liftgate flip-up glass latch unit. (Refer to 23 - BODY/DECKLID/HATCH/LIFTGATE/TAILGATE/FLIP-UP GLASS LATCH - REMOVAL) and (Refer to 23 - BODY/DECKLID/HATCH/LIFTGATE/TAILGATE/FLIP-UP GLASS LATCH - INSTALLATION).
- **Liftgate Flip-Up Glass Release Switch** - The liftgate flip-up glass release switch is integral to the liftgate license plate lamp housing. (Refer to 23 - BODY/DECKLID/HATCH/LIFTGATE/TAILGATE/FLIP-UP GLASS SWITCH - REMOVAL) and (Refer to 23 - BODY/DECKLID/HATCH/LIFTGATE/TAILGATE/FLIP-UP GLASS SWITCH - INSTALLATION).

Hard wired circuitry connects the liftgate flip-up glass power release system components to the electrical system of the vehicle. These hard wired circuits are integral to several wire harnesses, which are routed throughout the vehicle and retained by many different methods. These circuits may be connected to each other, to the vehicle electrical system and to the liftgate flip-up glass power release system components through the use of a combination of soldered splices, splice block connectors, and many different types of wire harness terminal connectors and insulators. Refer to the appropriate wiring information. The wiring information includes wiring diagrams, proper wire and connector repair procedures, further details on wire harness routing and retention, as well as pin-out and location views for the various wire harness connectors, splices and grounds.

OPERATION - POWER LOCK SYSTEM

The Passenger Door Module (PDM) contains the power door lock control logic and a power lock switch. The Driver Door Module (DDM) contains a power lock switch and controls the output to the driver side front door power lock motor, while the PDM controls the output to the power lock motors for the remaining doors and the liftgate.

When the power lock switch on the DDM is used to lock or unlock the doors, the DDM sends a control output to the driver side front door power lock motor and sends lock or unlock request messages to the PDM over the Programmable Communications Interface (PCI) data bus. The PDM responds to these messages by sending control outputs to the power lock motors of the remaining doors and the liftgate. When the power lock switch on the PDM is used to lock or unlock the doors, the PDM sends control outputs to the power lock motors in the passenger side front door, both rear doors and the liftgate, then sends lock or unlock request messages to the DDM over the Programmable Communications Interface (PCI) data bus. The DDM responds to these messages by sending control outputs to the power lock motor of the driver side front door.

In order to support the auto door locks and unlock on exit features, if enabled, the power lock system logic in the PDM needs to know the door ajar switch status, vehicle speed, and transmission gear selector lever position. The passenger side front door ajar switch is the only hard wired input to the PDM. The PDM obtains the remaining information from messages it receives from other electronic modules over the PCI data bus network.

See the owner's manual in the vehicle glove box for more information on the features, use and operation of the power lock system.

OPERATION - REMOTE KEYLESS ENTRY SYSTEM

The Passenger Door Module (PDM) contains the RKE system control logic and the RKE receiver. When the RKE receiver recognizes a Lock, Unlock or Panic message from a valid RKE transmitter, the RKE receiver provides that input to the PDM. The PDM circuitry and programming responds by sending the proper messages to the other electronic modules over the Programmable Communications Interface (PCI) data bus.

When an RKE lock message is received, the doors and the liftgate lock, the interior lighting is turned off, the horn chirps (if this feature is enabled), the exterior lamps flash (if this feature is enabled) and, if the vehicle is so equipped, the Vehicle Theft Security System (VTSS) is armed. When an RKE unlock message is received, the driver side front door (or all

POWER LOCKS (Continued)

doors and the liftgate if this feature is enabled) unlock, the interior lighting is turned on and, if the vehicle is so equipped, the VTSS is disarmed. If the vehicle is equipped with the Memory System and the RKE Linked to Memory feature is enabled, the RKE unlock message also recalls the driver seat, outside mirror and radio settings assigned to the RKE transmitter that sent the unlock signal.

When an RKE panic message is received, the driver side front door (or all doors and the liftgate if this feature is enabled) unlock, the interior lighting is turned on and, if the vehicle is so equipped, the VTSS is disarmed. The panic message will also cause the exterior lamps (including the headlights) to flash, and the horn to pulse for about three minutes, or until a second panic message is received. A vehicle speed of about 24 kilometers-per-hour (15 miles-per-hour) will also cancel the panic event.

See the owner's manual in the vehicle glove box for more information on the features, use and operation of the RKE system.

OPERATION - LIFTGATE FLIP-UP GLASS POWER RELEASE SYSTEM

When the liftgate mounted flip-up glass release switch is depressed, battery current is directed to the electric release motor that is integral to the flip-up glass latch located inside the liftgate. When the release motor is energized the latch releases and the flip-up glass can be opened. A liftgate flip-up glass limit switch is integral to the liftgate latch actuator mechanism. The limit switch automatically enables or disables the liftgate flip-up glass power release circuitry, depending upon the position of the liftgate latch lock mechanism. When the liftgate latch is unlocked, the limit switch closes and battery current is available at the release switch. When the liftgate latch is locked , the limit switch opens, and the release switch is disabled.

See the owner's manual in the vehicle glove box for more information on the features, use and operation of the liftgate flip-up glass power release system.

DIAGNOSIS AND TESTING - POWER LOCK SYSTEM

Following are tests that will help to diagnose the hard wired components and circuits of the power lock system. However, these tests may not prove conclusive in the diagnosis of this system. In order to obtain conclusive testing of the power lock system, the Programmable Communications Interface (PCI) data bus network and all of the electronic modules that provide inputs to, or receive outputs from the power lock system components must be checked.

The most reliable, efficient, and accurate means to diagnose the power lock system requires the use of a DRBIII® scan tool and the proper Diagnostic Procedures manual. The DRBIII® scan tool can provide confirmation that the PCI data bus is functional, that all of the electronic modules are sending and receiving the proper messages on the PCI data bus, and that the power lock motors are being sent the proper hard wired outputs by the door modules for them to perform their power lock system functions.

Refer to the appropriate wiring information. The wiring information includes wiring diagrams, proper wire and connector repair procedures, details of wire harness routing and retention, connector pin-out information and location views for the various wire harness connectors, splices and grounds.

PRELIMINARY DIAGNOSIS

As a preliminary diagnosis for the power lock system, note the system operation while you actuate both the Lock and Unlock functions with the power lock switches and with the Remote Keyless Entry (RKE) transmitter. Then, proceed as follows:

- If the entire power lock system fails to function with either the power lock switches or the RKE transmitter, check the fused B(+) fuse in the Power Distribution Center. If the fuse is OK, proceed to diagnosis of the door modules. (Refer to 8 - ELECTRICAL/ELECTRONIC CONTROL MODULES/ DOOR MODULE - DIAGNOSIS AND TESTING).
- If the power lock system functions with both power lock switches, but not with the RKE transmitter, proceed to diagnosis of the Remote Keyless Entry (RKE) system. (Refer to 8 - ELECTRICAL/POWER LOCKS - DIAGNOSIS AND TESTING - REMOTE KEYLESS ENTRY SYSTEM).
- If the power lock system functions with the RKE transmitter, but not with one or both power lock switches, proceed to diagnosis of the door modules. (Refer to 8 - ELECTRICAL/ELECTRONIC CONTROL MODULES/DOOR MODULE - DIAGNOSIS AND TESTING).
- If the driver side power lock switch operates only the driver side front door power lock motor, but all other power lock motors operate with the passenger side power lock switch or the RKE transmitter, use a DRBIII® scan tool and the appropriate diagnostic information to diagnose the Programmable Communications Interface (PCI) data bus.
- If only one power lock motor to operate with both power lock switches and the RKE transmitter, proceed to diagnosis of the power lock motor. (Refer to 8 - ELECTRICAL/POWER LOCKS/POWER LOCK MOTOR - DIAGNOSIS AND TESTING).

POWER LOCKS (Continued)

DIAGNOSIS AND TESTING - REMOTE KEYLESS ENTRY SYSTEM

Following are tests that will help to diagnose the Remote Keyless Entry (RKE) system. However, these tests may not prove conclusive in the diagnosis of this system. In order to obtain conclusive testing of the RKE system, the Programmable Communications Interface (PCI) data bus network and all of the electronic modules that provide inputs to, or receive outputs from the RKE system components must be checked.

The most reliable, efficient, and accurate means to diagnose the RKE system requires the use of a DRBIII® scan tool and the appropriate diagnostic information. The DRBIII® scan tool can provide confirmation that the PCI data bus is functional, that all of the electronic modules are sending and receiving the proper messages on the PCI data bus, and that the RKE receiver is being sent the proper radio frequency signals by the RKE transmitters to perform its RKE system functions.

Refer to the appropriate wiring information. The wiring information includes wiring diagrams, proper wire and connector repair procedures, details of wire harness routing and retention, connector pin-out information and location views for the various wire harness connectors, splices and grounds.

PRELIMINARY DIAGNOSIS

As a preliminary diagnosis for the RKE system, note the system operation while you perform both the Lock and Unlock functions with the power lock switches and with the Remote Keyless Entry (RKE) transmitter. Then, proceed as follows:

- If the entire power lock system fails to function with either the power lock switches or the RKE transmitter, check the fused B(+) fuse in the Power Distribution Center. If the fuse is OK, proceed to the diagnosis for the door modules. (Refer to 8 - ELECTRICAL/ELECTRONIC CONTROL MODULES/ DOOR MODULE - DIAGNOSIS AND TESTING).
- If the power lock system functions with both power lock switches, but not with the RKE transmitter, proceed to the diagnosis for the RKE transmitter. (Refer to 8 - ELECTRICAL/POWER LOCKS/REMOTE KEYLESS ENTRY TRANSMITTER - DIAGNOSIS AND TESTING).
- If the driver side power lock switch operates only the driver side front door power lock motor, but all other power lock motors operate with the passenger side power lock switch or the RKE transmitter, use a DRBIII® scan tool and the appropriate diagnostic information to diagnose the Programmable Communications Interface (PCI) data bus.

If the problem being diagnosed involves only the Sound Horn on Lock or the Flash Lights with Locks features, be certain that these programmable features are enabled. If the features are enabled and the service horn and turn signals still operate, the Body Control Module (BCM) and the PCI data bus must be tested. For diagnosis of the BCM or the PCI data bus, the use of a DRBIII scan tool and the appropriate diagnostic information are required.

DIAGNOSIS AND TESTING - LIFTGATE FLIP-UP GLASS POWER RELEASE SYSTEM

Refer to the appropriate wiring information. The wiring information includes wiring diagrams, proper wire and connector repair procedures, details of wire harness routing and retention, connector pin-out information and location views for the various wire harness connectors, splices and grounds.

(1) Check the fused B(+) fuse in the Junction Block (JB). If OK, go to Step 2. If not OK, repair the shorted circuit or component as required and replace the faulty fuse.

(2) Check for battery voltage at the fused B(+) fuse in the JB. If OK, go to Step 3. If not OK, repair the open fused B(+) circuit to the Power Distribution Center (PDC) as required.

(3) Disconnect the liftgate wire harness connector for the liftgate lock motor and flip-up glass limit switch from the motor and switch connector receptacle. Check for battery voltage at the fused B(+) circuit cavity of the liftgate wire harness connector for the liftgate lock motor and flip-up glass limit switch. If OK, go to Step 4. If not OK, repair the open fused B(+) circuit between the liftgate lock motor and flip-up glass limit switch and the JB as required.

(4) Check for continuity between the two liftgate flip-up glass limit switch terminals. There should be continuity with the liftgate latch unlocked, and no continuity with the latch locked. If OK, go to Step 5. If not OK, replace the faulty liftgate latch actuator (brainplate) unit.

(5) Disconnect the liftgate wire harness connector for the liftgate flip-up glass release switch from the switch connector receptacle. With the liftgate latch unlocked, check for battery voltage at the liftgate flip-up glass limit switch output circuit cavity of the liftgate wire harness connector for the release switch. If OK, go to Step 6. If not OK, repair the open liftgate flip-up glass limit switch output circuit between the release switch and the limit switch as required.

(6) Check for continuity between the two terminals of the liftgate flip-up glass release switch. There should be no continuity. Depress the switch, there should now be continuity. If OK, go to Step 7. If not OK, replace the faulty liftgate flip-up glass release switch.

(7) Disconnect the liftgate wire harness connector for the liftgate flip-up glass latch motor from the motor connector receptacle. Check for continuity

POWER LOCKS (Continued)

between the ground circuit cavity of the liftgate wire harness connector for the latch motor and a good ground. There should be continuity. If OK, go to Step 8. If not OK, repair the open ground circuit to ground as required.

(8) With the liftgate latch unlocked and the flip-up glass release switch depressed, check for battery voltage at the liftgate flip-up glass release switch output circuit cavity of the liftgate wire harness connector for the latch motor. If OK, replace the faulty liftgate flip-up glass latch unit. If not OK, repair the open liftgate flip-up glass release switch output circuit between the latch motor and the release switch as required.

DOOR CYLINDER LOCK / UNLOCK SWITCH

DESCRIPTION

The driver cylinder lock switch is integral to the key lock cylinder inside the driver side front door. The driver cylinder lock switch is a normally-open momentary switch that is hard wired between a body ground and the Driver Door Module (DDM) through the front door wire harness, and closes a path to ground through an internal resistor when the lock cylinder is rotated to the unlock position.

The driver cylinder lock switch cannot be adjusted or repaired and, if faulty or damaged, the driver side front door lock cylinder unit must be replaced. (Refer to 23 - BODY/DOOR - FRONT/LOCK CYLINDER - REMOVAL) and (Refer to 23 - BODY/DOOR - FRONT/LOCK CYLINDER - INSTALLATION). Refer to the appropriate wiring information. The wiring information includes wiring diagrams, proper wire and connector repair procedures, further details on wire harness routing and retention, as well as pin-out and location views for the various wire harness connectors, splices and grounds.

OPERATION

The driver cylinder lock switch is actuated by the key lock cylinder when the key is inserted in the lock cylinder and turned to the unlock position. The driver cylinder lock switch closes a path to ground through an internal resistor for the DDM when the driver door key lock cylinder is in the lock or unlock position, and opens the ground path when the lock cylinder is in the neutral position. The DDM reads the switch status through an internal pull-up, then sends the proper switch status messages to other electronic modules over the Programmable Communications Interface (PCI) data bus network. The driver cylinder lock switch unlock status message is used by the BCM as an input for Vehicle Theft Security System (VTSS) operation.

POWER LOCK MOTOR

DESCRIPTION

Power operated front door, rear door, and liftgate locking mechanisms are standard equipment on this model. The lock mechanisms are actuated by a reversible electric motor mounted within each door and the liftgate. The power lock motors for the doors are integral to the door latch units. The liftgate power lock motor is a separate unit secured to the latch brainplate near the center of the liftgate and operates the liftgate latch lock mechanism through a connecting linkage rod.

The power lock motors for the four doors cannot be adjusted or repaired and, if faulty or damaged, the entire door latch unit must be replaced. The liftgate power lock motor cannot be adjusted or repaired and, if faulty or damaged, the entire liftgate latch actuator (brainplate) unit must be replaced.

OPERATION

The driver side front door power lock motor is controlled by the Driver Door Module (DDM). The remaining power door lock motors and the liftgate power lock motor are controlled by the Passenger Door Module (PDM). A positive and negative battery connection to the two motor terminals will cause the power lock motor plunger to move in one direction. Reversing the current through these same two connections will cause the power lock motor plunger to move in the opposite direction.

DIAGNOSIS AND TESTING - POWER LOCK MOTOR

Remember, the Driver Door Module (DDM) circuitry controls the output to the driver side front door power lock motor. The Passenger Door Module (PDM) circuitry controls the output to the power lock motors for the remaining doors and the liftgate. Refer to the appropriate wiring information. The wiring information includes wiring diagrams, proper wire and connector repair procedures, details of wire harness routing and retention, connector pin-out information and location views for the various wire harness connectors, splices and grounds.

(1) Check each power lock motor for correct operation while moving the power lock switch to both the Lock and Unlock positions. If all of the power lock motors are inoperative, go to Step 2. If one power lock motor is inoperative, go to Step 3.

(2) If all of the power lock motors except the driver side front door are inoperative, the problem may be caused by one shorted motor. Disconnecting a shorted power lock motor from the power lock circuit will allow the good power lock motors to operate. Discon-

POWER LOCK MOTOR (Continued)

nect the wire harness connector from each PDM-controlled power lock motor, one at a time, and recheck both the lock and unlock functions by operating the power lock switch. If all of the PDM-controlled power lock motors are still inoperative after the above test, check for a short or open circuit between the power lock motors and the PDM. If disconnecting one power lock motor causes the other motors to become functional, go to Step 3 to test the power lock motor that was last disconnected.

(3) Once it is determined which power lock motor is inoperative, that motor can be tested as follows. Disconnect the door or liftgate wire harness connector from the inoperative power lock motor. Apply 12 volts to the lock and unlock driver circuit cavities of the power lock motor connector to check its operation in one direction. Reverse the polarity to check the motor operation in the opposite direction. If OK, repair the shorted or open circuits between the lock motor and the DDM or PDM as required. If not OK, replace the faulty power lock motor.

REMOTE KEYLESS ENTRY TRANSMITTER

DESCRIPTION

The Remote Keyless Entry (RKE) system Radio Frequency (RF) transmitter is equipped with three buttons, labeled Lock, Unlock, and Panic. It is also equipped with a key ring and is designed to serve as a key fob. The operating range of the transmitter radio signal is up to 10 meters (30 feet) from the RKE receiver.

Each RKE transmitter has a different vehicle access code, which must be programmed into the memory of the RKE receiver in the vehicle in order to operate the RKE system. Two transmitters are provided with the vehicle, but the RKE receiver can retain the access codes of up to four transmitters in its memory. (Refer to 8 - ELECTRICAL/POWER LOCKS/REMOTE KEYLESS ENTRY TRANSMITTER - STANDARD PROCEDURE - RKE TRANSMITTER PROGRAMMING).

In addition, the RKE transmitters for vehicles equipped with the optional Memory System are color-coded and have a number “1” or “2” molded into the transmitter case to coincide with the “Driver 1 (Black)” and “Driver 2 (Gray)” buttons of the memory switch on the driver side front door trim panel. These transmitters must also have their access codes programmed into the RKE receiver so that they coincide with the “Driver 1” and “Driver 2” buttons of the memory switch. (Refer to 8 - ELECTRICAL/POWER SEATS - DESCRIPTION - MEMORY SYSTEM).

The RKE transmitter operates on two Panasonic CR2016 (or equivalent) batteries. Typical battery life is from one to two years. The RKE transmitter cannot be repaired and, if faulty or damaged, it must be replaced.

OPERATION

See the owner's manual in the vehicle glove box for more information on the features, use and operation of the Remote Keyless Entry (RKE) transmitters.

DIAGNOSIS AND TESTING - REMOTE KEYLESS ENTRY TRANSMITTER

(1) Replace the Remote Keyless Entry (RKE) transmitter batteries. (Refer to 8 - ELECTRICAL/POWER LOCKS/REMOTE KEYLESS ENTRY TRANSMITTER - STANDARD PROCEDURE - RKE TRANSMITTER BATTERIES). Test each of the RKE transmitter functions. If OK, discard the faulty batteries. If not OK, go to Step 2.

(2) Program the suspect RKE transmitter and another known good transmitter into the RKE receiver. Use a DRBIII® scan tool, as described in the appropriate diagnostic information. (Refer to 8 - ELECTRICAL/POWER LOCKS/REMOTE KEYLESS ENTRY TRANSMITTER - STANDARD PROCEDURE - RKE TRANSMITTER PROGRAMMING).

(3) Test the RKE system operation with both transmitters. If both transmitters fail to operate the power lock system, use a DRBIII® scan tool and the appropriate diagnostic information for further diagnosis of the RKE system. If the known good RKE transmitter operates the power locks and the suspect transmitter does not, replace the faulty RKE transmitter.

NOTE: Be certain to perform the RKE Transmitter Programming procedure again following this test. This procedure will erase the access code of the test transmitter from the RKE receiver.

STANDARD PROCEDURE - RKE TRANSMITTER PROGRAMMING

To program the Remote Keyless Entry (RKE) transmitter access codes into the RKE receiver in the Passenger Door Module (PDM) requires the use of a DRBIII® scan tool. Refer to the appropriate diagnostic information.

STANDARD PROCEDURE - RKE TRANSMITTER BATTERIES

The Remote Keyless Entry (RKE) transmitter case snaps open and shut for battery access. To replace the RKE transmitter batteries:

(1) Using a trim stick or a thin coin, gently pry at the notch in the center seam of the RKE transmitter case halves near the key ring until the two halves unsnap.

REMOTE KEYLESS ENTRY TRANSMITTER (Continued)

(2) Lift the back half of the transmitter case off of the RKE transmitter.

(3) Remove the two batteries from the RKE transmitter.

(4) Replace the two batteries with new Panasonic CR2016, or their equivalent. Be certain that the batteries are installed with their polarity correctly oriented.

(5) Align the two RKE transmitter case halves with each other, and squeeze them firmly and evenly together until they snap back into place.

NOTE: The RKE system for this model uses a rolling code security strategy. This strategy requires that synchronization be maintained between the RKE transmitter and the RKE receiver. RKE transmitter battery removal or replacement can cause a loss of synchronization. If the RKE receiver fails to respond to the RKE transmitter following battery removal or replacement, depress and release the RKE transmitter Unlock button repeatedly while listening carefully for the power door locks in the vehicle to cycle. After between five and eight presses of the Unlock button, the power door locks should cycle, indicating that re-synchronization has occurred.

POWER LOCK SWITCH

DESCRIPTION

The power lock motors are controlled by a two-way momentary switch mounted on the trim panel of each front door. Each power lock switch is illuminated by a Light-Emitting Diode (LED) that is integral to the switch paddle.

The driver side front door power lock switch is integral to the Driver Door Module (DDM), and the passenger side front door power lock switch is integral to the Passenger Door Module (PDM). The power lock switches and their lamps cannot be adjusted or repaired and, if faulty or damaged, the entire DDM or PDM unit must be replaced. (Refer to 8 - ELECTRICAL/ELECTRONIC CONTROL MODULES/DOOR MODULE - DESCRIPTION).

OPERATION

The front door power lock switches provide a lock and unlock signal to the door module circuitry. The Driver Door Module (DDM) circuitry controls the output to the driver side front door power lock motor, while the Passenger Door Module (PDM) circuitry controls the output to the passenger side front door, both rear door and the liftgate power lock motors.

When the DDM-integrated power lock switch is actuated, the DDM circuitry sends control outputs to the driver side front door power lock motor and sends a message to the PDM over the Programmable Communications Interface (PCI) data bus to control the output to the passenger side front door, both rear door and the liftgate power lock motors. When the PDM-integrated power lock switch is actuated, the PDM circuitry sends control outputs to the passenger side front door, both rear door and the liftgate power lock motors and sends a message to the DDM over the Programmable Communications Interface (PCI) data bus to control the output to the driver side front door power lock motor.

Each power lock switch is illuminated by a Light-Emitting Diode (LED) when the ignition switch is turned to the On position. See the owner's manual in the vehicle glove box for more information on the features, use and operation of the power lock switches.

REMOTE KEYLESS ENTRY MODULE

DESCRIPTION

The Remote Keyless Entry (RKE) receiver is a radio frequency unit contained within the Passenger Door Module (PDM). The PDM also contains the program logic circuitry for the RKE system. The PDM is secured with screws to the back of the trim panel inside the passenger side front door. The RKE receiver has a memory function to retain the vehicle access codes of up to four RKE transmitters. The receiver is designed to retain the transmitter codes in memory, even if the battery is disconnected.

For diagnosis of the RKE receiver, the PDM, or the Programmable Communications Interface (PCI) data bus a DRBIII® scan tool and the appropriate diagnostic information are required. The RKE receiver is only serviced as a unit with the PDM and, if faulty or damaged, the entire PDM unit must be replaced. (Refer to 8 - ELECTRICAL/ELECTRONIC CONTROL MODULES/DOOR MODULE - DESCRIPTION).

OPERATION

The RKE receiver is energized by one of three messages from the RKE transmitter: Unlock, Lock, or Panic. The PDM circuitry responds to these messages to lock or unlock the power lock motors that it controls. The PDM circuitry also sends Lock, Unlock, and Panic messages to other electronic modules over the Programmable Communications Interface (PCI) data bus. These messages will result in the Driver Door Module (DDM) locking or unlocking the driver side front door, and the other electronic modules in the vehicle responding as their programming dictates.

POWER MIRRORS

TABLE OF CONTENTS

	page
POWER MIRRORS	
DESCRIPTION	10
OPERATION	11
DIAGNOSIS AND TESTING	11
POWER MIRROR SYSTEM	11
AUTOMATIC DAY / NIGHT MIRROR	
DESCRIPTION	11
OPERATION	12
DIAGNOSIS AND TESTING	12
AUTOMATIC DAY/NIGHT MIRROR	12
REMOVAL	13
INSTALLATION	13
POWER MIRROR SWITCH	
DESCRIPTION	13
OPERATION	14
SIDEVIEW MIRROR	
DESCRIPTION	14
OPERATION	14
DIAGNOSIS AND TESTING	14
DIAGNOSIS AND TESTING - POWER MIRROR	14
REMOVAL	16
INSTALLATION	16

POWER MIRRORS

DESCRIPTION

Driver and passenger side power operated outside rear view mirrors are standard factory-installed equipment on this model. The power mirror system allows the driver to adjust both outside mirrors electrically from the driver seat position by operating a switch on the driver side front door trim panel. The power mirror system receives non-switched battery current through a fuse in the Power Distribution Center (PDC) so that the power mirrors remain operational, regardless of the ignition switch position.

The standard equipment power operated outside rear view mirrors are also equipped with the heated mirror system, which will only operate when the ignition switch is in the On position and the rear window defogger switch is turned on. When the rear window defogger switch is in the On position, electric heater grids on the rear window glass and behind both outside rear view mirror glasses are energized. These electric heater grids produce heat to help clear the rear window glass and outside rear view mirrors of ice, snow, or fog. (Refer to 8 - ELECTRICAL/ HEATED MIRRORS - DESCRIPTION) for more information on this feature.

A driver side automatic dimming outside mirror that dims the mirror to reduce the glare of bright lights approaching the vehicle from behind, and a memory system that automatically positions the power mirrors for two different drivers are optional factory-installed equipment on this model. (Refer to 8 - ELECTRICAL/POWER MIRRORS/AUTOMATIC DAY / NIGHT MIRROR - DESCRIPTION) for more information. (Refer to 8 - ELECTRICAL/POWER SEATS - DESCRIPTION) for more information.

This group covers the following components of the power mirror system:

- Power mirrors
- Power mirror switch.

Certain functions and features of the power mirror system rely upon resources shared with other electronic modules in the vehicle over the Programmable Communications Interface (PCI) data bus network. The PCI data bus network allows the sharing of sensor information. This helps to reduce wire harness complexity, internal controller hardware, and component sensor current loads. At the same time, this system provides increased reliability, enhanced diagnostics, and allows the addition of many new feature capabilities. For diagnosis of these electronic modules or of the PCI data bus network, the use of a DRB scan tool and the proper Diagnostic Procedures manual are recommended.

The other electronic modules that may affect power mirror system operation are as follows:

- **Body Control Module (BCM)** (Refer to 8 - ELECTRICAL/ELECTRONIC CONTROL MODULES/BODY CONTROL/CENTRAL TIMER MODUL - DESCRIPTION) for more information.
- **Driver Door Module (DDM)** (Refer to 8 - ELECTRICAL/ELECTRONIC CONTROL MODULES/DRIVER DOOR MODULE - DESCRIPTION) for more information.
- **Passenger Door Module (PDM)**(Refer to 8 - ELECTRICAL/ELECTRONIC CONTROL MODULES/DRIVER DOOR MODULE - DESCRIPTION) for more information.

Refer to the appropriate wiring information. The wiring information includes wiring diagrams, proper

POWER MIRRORS (Continued)

wire and connector repair procedures, details of wire harness routing and retention, connector pin-out information and location views for the various wire harness connectors, splices and grounds.

OPERATION

The Driver Door Module (DDM) and the Passenger Door Module (PDM) each contain the power mirror control logic for the mirror on its respective door. The DDM also houses the power mirror switch. Each door module controls the positioning of its respective outside mirror through hard wired outputs to that mirror. When the power mirror switch on the DDM is used to position the passenger side outside mirror, the DDM sends mirror positioning messages to the PDM over the Programmable Communications Interface (PCI) data bus. The PDM responds to these messages by sending control outputs to move the passenger side mirror accordingly.

Both the PDM and DDM respond to the defogger switch status messages sent by the Body Control Module (BCM) over the PCI data bus to control the electric heater grids of their respective mirrors. (Refer to 8 - ELECTRICAL/HEATED MIRRORS - DESCRIPTION) for more information on this feature.

On models equipped with the optional memory system, each door module also receives a hard wired input from the two power mirror motor position potentiometers that are integral to each power mirror. Each door module then stores the Driver 1 and Driver 2 mirror position information for its respective mirror. When the DDM receives a Driver 1 or Driver 2 memory recall message from the memory switch on the driver side front door trim panel or from the Remote Keyless Entry (RKE) receiver in the PDM, the DDM positions the driver side mirror and sends a memory recall message back to the PDM over the PCI data bus to position the passenger side mirror.

See the owner's manual in the vehicle glove box for more information on the features, use and operation of the power mirror system.

DIAGNOSIS AND TESTING

Following are tests that will help to diagnose the hard wired components and circuits of the power mirror system. However, these tests may not prove conclusive in the diagnosis of this system. In order to obtain conclusive testing of the power mirror system, the Programmable Communications Interface (PCI) data bus network and all of the electronic modules that provide inputs to, or receive outputs from the power mirror system components must be checked.

The most reliable, efficient, and accurate means to diagnose the power mirror system requires the use of a DRB scan tool and the proper Diagnostic Procedures manual. The DRB scan tool can provide confirmation that the PCI data bus is functional, that all of the electronic modules are sending and receiving the proper messages on the PCI data bus, that the power mirror motors are being sent the proper hard wired outputs, and that the mirror position potentiometers are returning the proper outputs to the door modules for them to perform their power mirror system functions.

AUTOMATIC DAY / NIGHT MIRROR

DESCRIPTION - REAR VIEW MIRROR

An automatic day/night mirror system is an available factory-installed option on this model. The automatic dimming inside day/night rear view mirror system is a completely self-contained unit that replaces the standard equipment inside rear view mirror. This system will automatically change the reflectance of the inside rear view mirror to protect the driver from the unwanted headlight glare of trailing vehicles while driving at night. The automatic day/night inside mirror receives ignition switched battery current through a fuse in the junction block, and will only operate when the ignition switch is in the On position.

Vehicles equipped with the automatic day/night mirror system are also available with an optional factory-installed automatic dimming outside rear view mirror for the driver side of the vehicle. (Refer to 8 - ELECTRICAL/POWER MIRRORS/SIDEVIEW MIRROR - DESCRIPTION) for more information on this option.

The automatic day/night mirror sensitivity cannot be repaired or adjusted. If any component of this unit is faulty or damaged, the entire automatic day/night inside rear view mirror unit must be replaced. Refer to the appropriate wiring information. The wiring information includes wiring diagrams, proper wire and connector repair procedures, details of wire harness routing and retention, connector pin-out information and location views for the various wire harness connectors, splices and grounds.

DESCRIPTION - OUTSIDE REAR VIEW MIRROR

An automatic dimming outside rear view mirror is an available factory-installed option for the driver side of the vehicle, if the vehicle is also equipped with the automatic day/night inside rear view mirror. The automatic dimming outside mirror is completely controlled by the circuitry of the automatic day/night inside rear view mirror. The automatic dimming outside mirror will automatically change the reflectance of the driver side outside rear view mirror to protect

AUTOMATIC DAY / NIGHT MIRROR (Continued)

the driver from the unwanted headlight glare of trailing vehicles while driving at night. The automatic dimming outside mirror will only operate when the ignition switch is in the On position.

The automatic dimming outside mirror sensitivity cannot be repaired or adjusted. If any component of this unit is faulty or damaged, the entire automatic dimming outside mirror unit must be replaced. (Refer to 8 - ELECTRICAL/POWER MIRRORS/SIDEVIEW MIRROR - DIAGNOSIS AND TESTING). Refer to the appropriate wiring information. The wiring information includes wiring diagrams, proper wire and connector repair procedures, details of wire harness routing and retention, connector pin-out information and location views for the various wire harness connectors, splices and grounds.

OPERATION - REAR VIEW MIRROR

The automatic day/night mirror switch allows the driver a manual control of whether the automatic dimming feature is operational. This switch is a momentary rocker-type switch located on the lower rear-facing surface of the mirror housing. When Auto is selected, a Light-Emitting Diode (LED) on the mirror housing just to the right of the switch illuminates to indicate that automatic day/night mirror is turned on. When Off is selected, the LED is turned off. The mirror also senses the backup lamp circuit, and will automatically disable its self-dimming feature whenever the transmission gear selector is in the Reverse position.

A thin layer of electrochromatic material between two pieces of conductive glass make up the face of the mirror. Two photocell sensors are used to monitor light levels and adjust the reflectance of the mirror. The ambient photocell sensor faces forward, to detect the outside light levels. The headlamp sensor is located on the mirror housing just to the left of the switch and facing rearward, to detect the light level received at the rear window side of the mirror. When the difference between the two light levels becomes too great (the light level received at the rear of the mirror is much higher than that at the front of the mirror), the mirror begins to darken.

On models with an optional driver side automatic dimming outside mirror, the signal to control the dimming of that mirror is generated by the automatic day/night inside rear view mirror circuitry. That signal is then delivered to the driver side outside rear view mirror on a hard wired circuit.

See the owner's manual in the vehicle glove box for more information on the features, use and operation of the automatic day/night mirror system.

OPERATION - OUTSIDE REAR VIEW MIRROR

The automatic dimming outside mirror is operated by the same controls and circuitry as the automatic day/night mirror. When the automatic day/night mirror is turned on or off, the automatic dimming outside mirror is likewise turned on or off. Like in the automatic day/night mirror, a thin layer of electrochromatic material between two pieces of conductive glass make up the face of the automatic dimming outside mirror. However, the signal to control the dimming of the outside mirror is generated by the automatic day/night inside rear view mirror circuitry.

See the owner's manual in the vehicle glove box for more information on the features, use and operation of the automatic dimming outside mirror.

DIAGNOSIS AND TESTING

For complete circuit diagrams, refer to the appropriate wiring information. The wiring information includes wiring diagrams, proper wire and connector repair procedures, details of wire harness routing and retention, connector pin-out information and location views for the various wire harness connectors, splices and grounds.

(1) Check the fused ignition switch output (run/start) fuse in the junction block. If OK, go to Step 2. If not OK, repair the shorted circuit or component as required and replace the faulty fuse.

(2) Turn the ignition switch to the On position. Check for battery voltage at the fused ignition switch output (run/start) fuse in the junction block. If OK, go to Step 3. If not OK, repair the open fused ignition switch output (run/start) circuit to the ignition switch as required.

(3) Disconnect the overhead wire harness connector from the automatic day/night mirror connector receptacle. Check for battery voltage at the fused ignition switch output (run/start) circuit cavity of the overhead wire harness connector for the automatic day/night mirror. If OK, go to Step 4. If not OK, repair the open fused ignition switch output (run/start) circuit to the fuse in the junction block as required.

(4) Turn the ignition switch to the Off position. Check for continuity between the ground circuit cavity of the overhead wire harness connector for the automatic day/night mirror and a good ground. There should be continuity. If OK, go to Step 5. If not OK, repair the open ground circuit to ground as required.

(5) Turn the ignition switch to the On position. Set the parking brake. Place the transmission gear selector lever in the Reverse position. Check for battery voltage at the backup lamp switch output circuit cavity of the overhead wire harness connector for the automatic day/night mirror. If OK, reconnect the overhead wire harness connector to the automatic

AUTOMATIC DAY / NIGHT MIRROR (Continued)

day/night mirror connector receptacle and go to Step 6. If not OK, repair the open backup lamp switch output circuit as required.

(6) Place the transmission gear selector lever in the Neutral position. Place the automatic day/night mirror switch in the Auto (LED next to the switch is lighted) position (Fig. 1). Cover the forward facing ambient photocell sensor to keep out any ambient light.

NOTE: The ambient photocell sensor must be covered completely, so that no light reaches the sensor. Use a finger pressed tightly against the sensor, or cover the sensor completely with electrical tape.

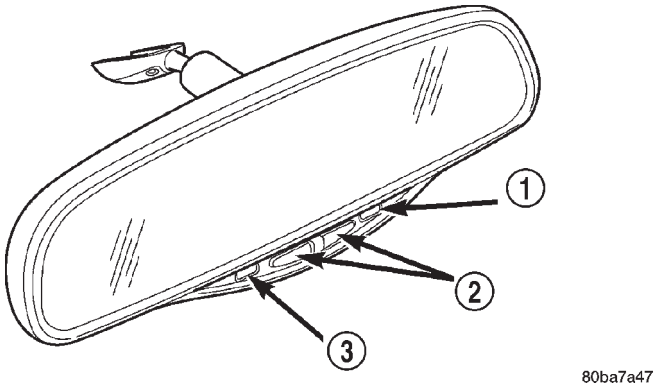

Fig. 1 Automatic Day/Night Mirror

1 - LED INDICATOR
2 - SWITCH
3 - HEADLAMP SENSOR

(7) Shine a light into the rearward facing headlamp photocell sensor. The automatic day/night mirror should darken. If OK, go to Step 8. If not OK, replace the faulty automatic day/night mirror unit.

(8) With the mirror darkened, place the transmission gear selector lever in the Reverse position. The automatic day/night mirror should return to its normal reflectance. If not OK, replace the faulty automatic day/night mirror unit.

REMOVAL

(1) Disconnect and isolate the battery negative cable.

(2) Disconnect the overhead wire harness connector from the automatic day/night mirror connector receptacle (Fig. 2).

(3) Remove the screw that secures the automatic day/night mirror to the support button on the windshield.

(4) Slide the automatic day/night mirror mounting base upwards far enough to clear the support button on the windshield.

(5) Remove the automatic day/night mirror from the support button on the windshield.

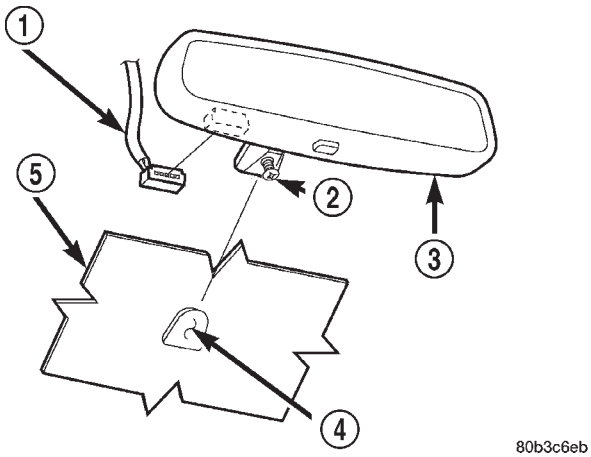

Fig. 2 Automatic Day/Night Mirror Remove/Install - Typical

1 - CONNECTOR
2 - SCREW
3 - ELECTROCHROMATIC REAR VIEW MIRROR
4 - SUPPORT BUTTON
5 - WINDSHIELD

INSTALLATION

(1) Position the automatic day/night mirror above the support button on the windshield.

(2) Slide the automatic day/night mirror mounting base downwards over the support button on the windshield.

(3) Install and tighten the screw that secures the automatic day/night mirror to the support button on the windshield. Tighten the screw to 1.7 N·m (15 in. lbs.).

(4) Reconnect the overhead wire harness connector to the automatic day/night mirror connector receptacle.

(5) Reconnect the battery negative cable.

POWER MIRROR SWITCH

DESCRIPTION

Both the right and left power outside mirrors are controlled by a single multi-function switch unit located on the driver side front door trim panel. The power mirror switch unit includes a three-position rocker selector switch and four momentary directional push button switches.

The power mirror switch unit is integral to the Driver Door Module (DDM). The power mirror switch cannot be repaired or adjusted and, if faulty or damaged, the entire DDM unit must be replaced. (Refer to 8 - ELECTRICAL/ELECTRONIC CONTROL MODULES/DRIVER DOOR MODULE - REMOVAL) for the DDM service procedures.

POWER MIRROR SWITCH (Continued)

OPERATION

The power mirror selector switch is moved right (right mirror control), left (left mirror control), or center to turn the power outside mirror system off. When the selector switch is in the right mirror control or left mirror control position, one of the four directional control buttons is depressed to control movement of the selected mirror up, down, right, or left. When the selector switch is in the Off position, depressing any of the directional switches will not change either mirror position.

See the owner's manual in the vehicle glove box for more information on the features, use and operation of the power mirror switches.

SIDEVIEW MIRROR

DESCRIPTION

Mechanically folding, power operated outside rear view mirrors are standard equipment on this model. Each power mirror housing contains two electric motors, two drive mechanisms, an electric heating grid, the mirror glass case and the mirror glass. One motor and drive controls mirror up-and-down (vertical) movement, and the other controls right-and-left (horizontal) movement. If the vehicle is equipped with the optional memory system, each mirror head also contains two position potentiometers. One position potentiometer monitors the vertical mirror motor, and the other monitors the horizontal mirror motor.

An optional driver side automatic dimming mirror is able to automatically change its reflectance level. This mirror is controlled by the circuitry of the automatic day/night inside rear view mirror. A thin layer of electrochromic material between two pieces of conductive glass make up the face of the mirror. (Refer to 8 - ELECTRICAL/POWER MIRRORS/AUTOMATIC DAY / NIGHT MIRROR - DESCRIPTION) for more information on this feature.

The power mirror unit cannot be repaired. Only the mirror glass and glass case are serviced separately. The replacement mirror glass is supplied with an instruction sheet that details the recommended replacement procedure. If any other component of the power mirror unit is faulty or damaged, the entire power mirror unit must be replaced.

OPERATION

Each of the two outside power mirrors includes two reversible electric motors that are secured within the power mirror housing. Each motor moves the mirror case and glass through an integral drive unit. When a power mirror motor is supplied with battery current and ground, it moves the mirror case and glass through its drive unit in one direction. When the battery current and ground feeds to the motor are reversed, it moves the mirror case and glass in the opposite direction.

The power mirrors are equipped with a standard equipment electric heating grid that is applied to the back of each outside rear view mirror glass. When an electrical current is passed through the resistor wire of the heating grid, it warms the mirror glass. (Refer to 8 - ELECTRICAL/HEATED MIRRORS - DESCRIPTION) for more information on the operation of the heated mirrors and the rear window defogger system.

If the driver side mirror is equipped with the automatic dimming outside mirror option, two photocell sensors on the inside rear view mirror are used to monitor light levels and adjust the reflectance of both the inside and driver side outside mirrors. This change in reflectance helps to reduce the glare of headlamps approaching the vehicle from the rear. (Refer to 8 - ELECTRICAL/POWER MIRRORS/AUTOMATIC DAY / NIGHT MIRROR - OPERATION) for more information on this feature.

If the vehicle is equipped with the optional memory system, the Driver Door Module (DDM) and the Passenger Door Module (PDM) store the mirror position information as monitored through the mirror motor position potentiometers. When the memory system requests a recall of the stored mirror position, the DDM and the PDM are able to duplicate the stored mirror positions by moving the mirror motors until the potentiometer readings match the stored values.

DIAGNOSIS AND TESTING

For complete circuit diagrams, refer to the appropriate wiring information. The wiring information includes wiring diagrams, proper wire and connector repair procedures, details of wire harness routing and retention, connector pin-out information and location views for the various wire harness connectors, splices and grounds.

BOTH MIRRORS INOPERATIVE

(1) Check the operation of the power lock switch on the driver side front door. If all of the doors lock and unlock, replace the faulty Driver Door Module (DDM). If not OK, go to Step 2.

(2) Check the operation of the power lock switch on the passenger side front door. If all of the doors lock and unlock, replace the faulty DDM. If not OK, go to Step 3.

(3) Check the fused B(+) fuse in the Power Distribution Center (PDC). If OK, go to Step 4. If not OK, repair the shorted circuit or component as required and replace the faulty fuse.

SIDEVIEW MIRROR (Continued)

(4) Check for battery voltage at the fused B(+) fuse in the PDC. If OK, go to Step 5. If not OK, repair the open fused B(+) circuit to the battery as required.

(5) Disconnect and isolate the battery negative cable. Remove the trim panel from the driver side front door. Disconnect the 15-way door wire harness connector from the DDM connector receptacle. Check for continuity between the ground circuit cavity of the 15-way door wire harness connector for the DDM and a good ground. There should be continuity. If OK, go to Step 6. If not OK, repair the open ground circuit to ground as required.

(6) Reconnect the battery negative cable. Check for battery voltage at the fused B(+) circuit cavity of the 15-way door wire harness connector for the DDM. If OK, replace the faulty DDM. If not OK, repair the open fused B(+) circuit to the fuse in the PDC as required.

ONE MIRROR INOPERATIVE

(1) If the one inoperative mirror is on the passenger side, go to Step 2. If the one inoperative mirror is on the driver side, go to Step 3.

(2) Check if the passenger front door will lock and unlock using the power lock switch on the driver side front door. If OK, go to Step 3. If not OK, go to Step 6.

(3) Disconnect and isolate the battery negative cable. Remove the trim panel from the front door. Disconnect the 12-way mirror wire harness connector from the door wire harness connector.

(4) Using two jumper wires, test the mirror as shown in the Mirror Test chart (Fig. 3). If the mirror tests OK, go to Step 5. If the mirror does not test OK, replace the faulty mirror.

(5) Disconnect the 12-way door wire harness connector from the door module connector receptacle. Check all of the circuits of the door wire harness between the connector for the mirror and the connector for the door module for opens or shorts. If all of the circuits are OK, replace the faulty door module. If any of the circuits are not OK, repair the open or shorted circuit(s) as required.

(6) Use a DRB scan tool and the proper Diagnostic Procedures manual to test and repair the faulty Programmable Communications Interface (PCI) data bus communication between the two door modules.

NO MIRROR HEAT

If both mirror heaters are inoperative, (Refer to 8 - ELECTRICAL/HEATED MIRRORS - DESCRIPTION).

(1) Disconnect and isolate the battery negative cable. Remove the front door trim panel on the side of the inoperative mirror heater.

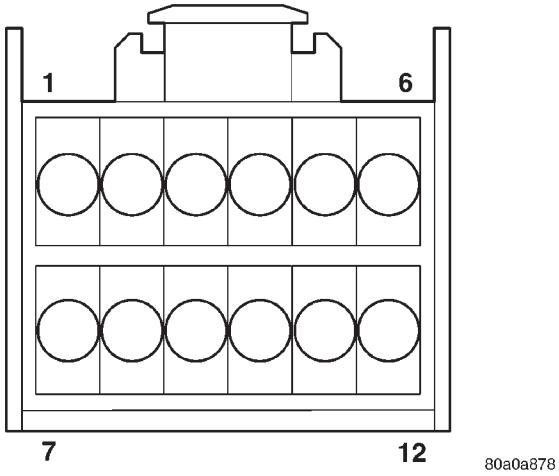

Fig. 3 Mirror Test

POWER MIRROR TEST

APPLY 12 VOLTS TO:	APPLY GROUND TO:	MIRROR REACTION
	DRIVER SIDE	
6	12	LEFT
12	6	RIGHT
11	12	UP
12	11	DOWN
	PASSENGER SIDE	
1	7	LEFT
7	1	RIGHT
8	7	UP
7	8	DOWN

(2) Disconnect the 12-way door wire harness connector from the door module connector receptacle. Check for continuity between the heater switched ground circuit cavity and the heater 12V supply circuit cavity of the 12-way door wire harness connector for the door module. There should be continuity. If OK, use a DRB scan tool and the proper Diagnostic Procedures manual to test the door module and the PCI data bus. If not OK, replace the faulty power mirror unit.

NO MIRROR DIMMING (Driver Side Only)

(1) Test the operation of the automatic day/night mirror. (Refer to 8 - ELECTRICAL/POWER MIRRORS/AUTOMATIC DAY / NIGHT MIRROR - OPERATION). If OK, go to Step 2. If not OK, repair the automatic day/night mirror unit as required.

(2) Disconnect and isolate the battery negative cable. Remove the driver side front door trim panel.

(3) Disconnect the door wire harness connector from the power mirror wire harness connector. Connect a voltmeter between the electrochromatic (+) and electrochromatic (–) circuit cavities of the door wire harness connector for the power mirror. Turn on the automatic day/night mirror system while observing the voltmeter. A voltmeter reading of 1.45 ± 0.05

SIDEVIEW MIRROR (Continued)

volts indicates a proper dimming signal is being received at the door wire harness connector for the power mirror. If OK, replace the faulty power mirror. If not OK, repair the shorted or open electrochromatic (+) or electrochromatic (–) circuit(s) to the automatic day/night mirror as required.

NO MIRROR MEMORY

For diagnosis of the memory system, the use of a DRB scan tool and the proper Diagnostic Procedures manual are recommended. (Refer to 8 - ELECTRICAL/POWER SEATS - DESCRIPTION).

REMOVAL

(1) Disconnect and isolate the battery negative cable.

(2) Remove the trim panel from the front door. (Refer to 23 - BODY/DOOR - FRONT/TRIM PANEL - REMOVAL) for the procedures.

(3) Disconnect the power mirror wire harness connector from the door wire harness connector (Fig. 4).

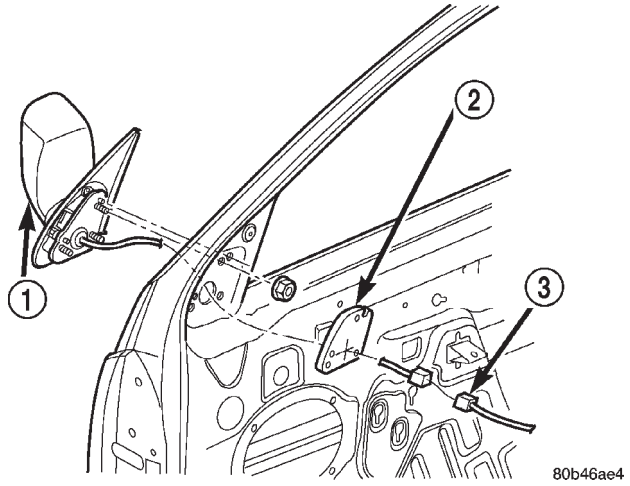

Fig. 4 Power Mirror Remove/Install

1 - SIDEVIEW MIRROR
2 - MIRROR FLAG SEAL
3 - CONNECTOR

(4) Remove the mirror flag seal from the inner door panel.

(5) Remove the three nuts that secure the power mirror mounting studs to the door flag.

(6) Remove the power mirror from the outside of the door.

INSTALLATION

(1) Position the power mirror onto the outside of the door.

(2) Install and tighten the three nuts that secure the power mirror mounting studs to the door flag. Tighten the nuts to 7.4 N·m (65 in. lbs.).

(3) Install the mirror flag seal onto the inner door panel.

(4) Reconnect the power mirror wire harness connector to the door wire harness connector.

(5) Install the trim panel onto the front door. (Refer to 23 - BODY/DOOR - FRONT/TRIM PANEL - INSTALLATION) for the procedures.

(6) Reconnect the battery negative cable.

POWER SEATS

TABLE OF CONTENTS

page

POWER SEATS
DESCRIPTION 17
OPERATION. 18
DIAGNOSIS AND TESTING 19
POWER SEAT SYSTEM 19
DRIVER SEAT SWITCH
DESCRIPTION 19
OPERATION. 20
DIAGNOSIS AND TESTING 20
POWER SEAT SWITCH 20
REMOVAL 22
INSTALLATION. 22
LUMBAR CONTROL SWITCH
DESCRIPTION 23
OPERATION. 23
DIAGNOSIS AND TESTING 23
POWER LUMBAR SWITCH 23
REMOVAL 23
INSTALLATION. 24
LUMBAR MOTOR
DESCRIPTION 24
OPERATION. 24
DIAGNOSIS AND TESTING 25
POWER LUMBAR ADJUSTER 25

page

MEMORY SET SWITCH
DESCRIPTION 25
OPERATION. 25
DIAGNOSIS AND TESTING 25
MEMORY SWITCH 25
REMOVAL 26
INSTALLATION. 26
PASSENGER SEAT SWITCH
DESCRIPTION 26
OPERATION. 26
DIAGNOSIS AND TESTING 27
POWER SEAT SWITCH 27
REMOVAL 28
INSTALLATION. 28
RECLINER MOTOR
DESCRIPTION 29
OPERATION. 29
DIAGNOSIS AND TESTING 29
POWER SEAT RECLINER 29
POWER SEAT TRACK
DESCRIPTION 30
OPERATION. 31
DIAGNOSIS AND TESTING 31
POWER SEAT TRACK 31

POWER SEATS

DESCRIPTION

Driver and passenger power front seats are an available factory-installed option for this vehicle. The power seat system option allows the driver and front seat passenger to electrically adjust their seating positions for optimum control and comfort using the power seat switches located on the outboard seat cushion side shield of each front seat. The power seat system receives battery current through a fuse in the Power Distribution Center (PDC) and a circuit breaker in the junction block so that the power seats remain operational, regardless of the ignition switch position.

Two power seat options are offered on this vehicle, depending upon the model. They are as follows:

- **Six-way power seat** - This power seat is an available option on Laredo models equipped with cloth-trimmed seats and includes a six-way adjustable seat cushion track with manual seat back recliners.
- **Ten-way power seat** - This power seat option is standard on Limited models and optional on Laredo models with leather-trimmed seats. This option includes a six-way adjustable seat cushion track with power seat back recliners and power lumbar supports.

The ten-way power seat is also available with the heated seat system option on both Laredo and Limited models; and, on Limited models only, there is a standard equipment memory system that automatically positions the power seat for two different drivers. Refer to **Heated Seat System** for more information on the heated seat option. Refer to **Memory System** in the Memory System section of this group for more information on the memory system.

The power seat system includes the following components:

- Power lumbar adjuster (ten-way power seat only)
- Power lumbar switch (ten-way power seat only)
- Power seat recliner (ten-way power seat only)
- Power seat switch
- Power seat track.

POWER SEATS (Continued)

Refer to **Power Seat** in Wiring Diagrams for complete circuit diagrams. Following are general descriptions of the major components in the power seat system.

DESCRIPTION - MEMORY SYSTEM

An electronic memory system is standard equipment on the Limited model. The memory system is able to store and recall the driver side power seat positions (including the power recliner position), and both outside power mirror positions for two drivers. For vehicles with a radio connected to the Programmable Communications Interface (PCI) data bus network, the memory system is also able to store and recall up to twenty - ten AM and ten FM - radio station presets for two drivers. The memory system also will store and recall the last station listened to for each driver, even if it is not one of the twenty preset stations.

The memory system will automatically return to all of these settings when the corresponding numbered and color-coded button (Driver 1 - Black, or Driver 2 - Gray) of the memory switch on the driver side front door trim panel is depressed, or when the doors are unlocked using the corresponding numbered and color-coded (Driver 1 - Black, or Driver 2 - Gray) Remote Keyless Entry (RKE) transmitter. A customer programmable feature of the memory system allows the RKE recall of memory features to be disabled in cases where there are more than two drivers of the vehicle.

The memory system also has a customer programmable easy exit feature that will move the driver seat rearward 55 millimeters (two inches) or to the end of its travel, whichever occurs first, when the key is removed from the ignition switch lock cylinder.

A Memory Seat Module (MSM) or Memory Heated Seat Module (MHSM) are used on this model to control and integrate the many electronic functions and features included in the memory system. On vehicles equipped with the heated seat system option, the MHSM also controls the functions and features of that system.

The memory system includes the following components:

- Memory seat module (or memory heated seat module)
- Memory switch
- Position potentiometers on both outside power mirrors
- Position potentiometers on the driver side power seat track and power seat recliner motors.
- Radio receiver (if PCI data bus capable).

Certain functions and features of the memory system rely upon resources shared with other electronic modules in the vehicle over the Programmable Communications Interface (PCI) data bus network. The PCI data bus network allows the sharing of sensor information. This helps to reduce wire harness complexity, internal controller hardware, and component sensor current loads. At the same time, this system provides increased reliability, enhanced diagnostics, and allows the addition of many new feature capabilities. For diagnosis of these electronic modules or of the PCI data bus network, the use of a DRB® scan tool and the proper Diagnostic Procedures manual are recommended.

The other electronic modules that may affect memory system operation are as follows:

- **Body Control Module (BCM)** - Refer to **Body Control Module** in Electronic Control Modules for more information.
- **Driver Door Module (DDM)** - Refer to **Door Module** in Electronic Control Modules for more information.
- **Electronic Vehicle Information Center (EVIC)** - Refer to **Electronic Vehicle Information Center** in Overhead Console Systems for more information.
- **Passenger Door Module (PDM)** - Refer to **Door Module** in Electronic Control Modules for more information.
- **Powertrain Control Module (PCM)** - Refer to **Powertrain Control Module** in Electronic Control Modules for more information.
- **Radio Receiver** - Refer to **Radio Receiver** in Audio Systems for more information.

Refer to **Heated Seat System** for more information on this system. Refer to **Remote Keyless Entry System** in Power Lock Systems for more information on the RKE system. Refer to **Power Mirror** in Power Mirror Systems for more information on the mirror position potentiometers. Refer to **Power Seat Track** and **Power Seat Recliner** in the Power Seat System section of this group for more information on the driver side power seat position potentiometers.

Refer to **Power Seat** in Wiring Diagrams for complete circuit diagrams. Following are general descriptions of the remaining major components in the factory-installed memory system.

OPERATION - POWER SEAT SYSTEM

The power seat system allows the driver and/or front passenger seating positions to be adjusted electrically and independently using the separate power seat switches found on the outboard seat cushion side shield of each front seat. See the owner's manual in the vehicle glove box for more information on the features, use and operation of the power seat system.

POWER SEATS (Continued)

OPERATION - MEMORY SYSTEM

See the owner's manual in the vehicle glove box for more information on the features, use and operation of the memory system. For diagnosis of the MSM, the PCI data bus, or the other electronic modules on the PCI data bus that provide inputs and outputs for the memory system, the use of a DRB® scan tool and the proper Diagnostic Procedures manual are recommended.

DRIVER AND PASSENGER DOOR MODULES

The Driver Door Module (DDM) monitors the memory switch through a hard wired circuit. It also monitors the unlock messages from the Remote Keyless Entry (RKE) receiver in the Passenger Door Module (PDM) sent over the Programmable Communications Interface (PCI) data bus. The DDM is programmed to send memory recall messages and memory system status messages over the PCI data bus to the other electronic modules when it detects a memory recall request.

Refer to **Door Module** in Electronic Control Modules for more information on the DDM and PDM.

ELECTRONIC VEHICLE INFORMATION CENTER

The Electronic Vehicle Information Center (EVIC) serves as the user interface for the memory system. It displays memory system status messages and provides the user with the means for enabling and disabling the many customer programmable features available on the vehicle, including those for the memory system.

See the owner's manual in the vehicle glove box for more information on the features, use and operation of the EVIC. Refer to **Electronic Vehicle Information Center** in Overhead Console Systems for more information on the EVIC.

DIAGNOSIS & TESTING - POWER SEAT SYSTEM

Following are tests that will help to diagnose the hard wired components and circuits of the power seat system. However, if the vehicle is also equipped with the optional memory system, these tests may not prove conclusive in the diagnosis of the driver side power seat. In order to obtain conclusive testing of the driver side power seat with the memory system option, the Programmable Communications Interface (PCI) data bus network and all of the electronic modules that provide inputs to, or receive outputs from the memory system components must be checked.

The most reliable, efficient, and accurate means to diagnose the driver side power seat with the memory system option requires the use of a DRB® scan tool and the proper Diagnostic Procedures manual. The DRB® scan tool can provide confirmation that the PCI data bus is functional, that all of the electronic modules are sending and receiving the proper messages on the PCI data bus, and that the memory system is receiving the proper hard wired inputs and relaying the proper hard wired outputs to perform its driver side power seat functions.

Before any testing of the power seat system is attempted, the battery should be fully-charged and all of the power seat system wire harness connections and pins cleaned and tightened to ensure proper circuit continuity and ground paths. For complete circuit diagrams, refer to **Power Seat** in Wiring Diagrams.

With the dome lamp on, apply the power seat switch in the direction of the failure. If the dome lamp dims, the seat may be jamming. Check under and behind the seat for binding or obstructions. If the dome lamp does not dim, proceed with testing of the individual components and circuits.

DIAGNOSIS & TESTING - MEMORY SYSTEM

Following are tests that will help to diagnose the components and circuits that provide hard wired inputs to the memory system. However, these tests may not prove conclusive in the diagnosis of this system. In order to obtain conclusive testing of the memory system, the Programmable Communications Interface (PCI) data bus network and all of the electronic modules that provide inputs to, or receive outputs from the memory system components must be checked.

The most reliable, efficient, and accurate means to diagnose the memory system requires the use of a DRB® scan tool and the proper Diagnostic Procedures manual. The DRB® scan tool can provide confirmation that the PCI data bus is functional, that all of the electronic modules are sending and receiving the proper messages on the PCI data bus, and that the memory system is receiving the proper hard wired inputs and relaying the proper hard wired outputs to perform its functions.

DRIVER SEAT SWITCH

DESCRIPTION

Two different power seat switches are used on this vehicle, depending upon the optional power seat system installed in the vehicle. The six-way power seats are each equipped with a switch featuring three switch control knobs ganged together on the outboard seat cushion side shield (Fig. 1). The ten-way power seats are each equipped with a switch featuring two knobs ganged together on the outboard seat cushion side shield (Fig. 2).

DRIVER SEAT SWITCH (Continued)

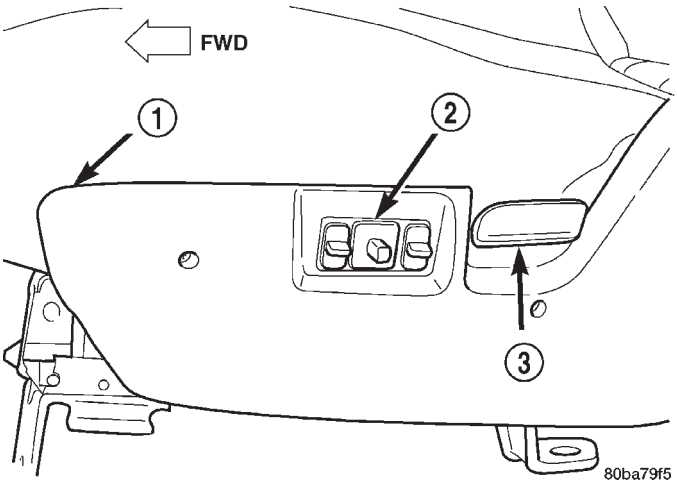

Fig. 1 Six-Way Power Seat Switches

1 - OUTBOARD SEAT CUSHION SIDE SHIELD
2 - POWER SEAT TRACK SWITCHES
3 - MECHANICAL SEAT BACK RECLINER LEVER

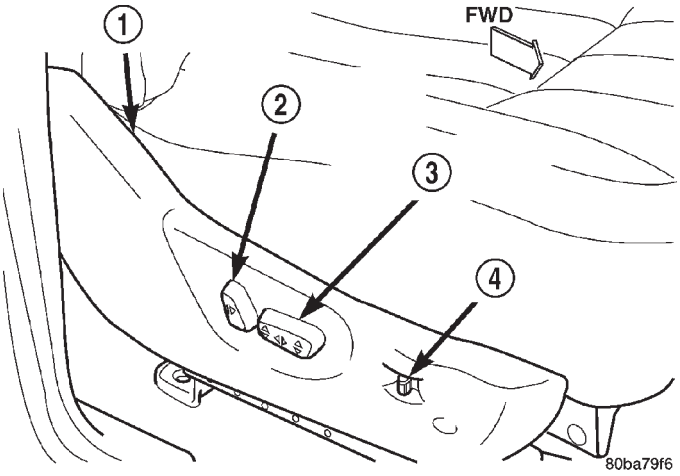

Fig. 2 Ten-Way Power Seat Switches

1 - OUTBOARD CUSHION SIDE SHIELD
2 - POWER SEAT RECLINER SWITCH
3 - POWER SEAT TRACK SWITCH
4 - POWER LUMBAR SWITCH

The switch units for both power seat types are secured to the back of the seat cushion side shield with two screws. However, the control knobs for the six-way power seat switch unit remain installed during switch unit removal and installation, while both knobs for the ten-way power seat switch unit must be removed.

The individual switches in both power seat switch units cannot be repaired. If one switch is damaged or faulty, the entire power seat switch unit must be replaced.

OPERATION

The power seat tracks of both the six-way and the ten-way power seat systems can be adjusted in six different ways using the power seat switches. The ten-way system has the additional power seat recliner switch integral to the power seat switch and also has a separate, stand-alone switch to control the power lumbar adjuster. See the owner's manual in the vehicle glove box for more information on the power seat switch functions and the seat adjusting procedures.

When a power switch control knob or knobs are actuated, a battery feed and a ground path are applied through the switch contacts to the power seat track or recliner adjuster motor. The selected adjuster motor operates to move the seat track or recliner through its drive unit in the selected direction until the switch is released, or until the travel limit of the adjuster is reached. When the switch is moved in the opposite direction, the battery feed and ground path to the motor are reversed through the switch contacts. This causes the adjuster motor to run in the opposite direction.

No power seat switch should be held applied in any direction after the adjuster has reached its travel limit. The power seat adjuster motors each contain a self-resetting circuit breaker to protect them from overload. However, consecutive or frequent resetting of the circuit breaker must not be allowed to continue, or the motor may be damaged.

DIAGNOSIS & TESTING - SEAT SWITCH

Following are tests that will help to diagnose the hard wired components and circuits of the power seat system. However, if the vehicle is also equipped with the optional memory system, these tests may not prove conclusive in the diagnosis of the driver side power seat. In order to obtain conclusive testing of the driver side power seat with the memory system option, the Programmable Communications Interface (PCI) data bus network and all of the electronic modules that provide inputs to, or receive outputs from the memory system components must be checked.

The most reliable, efficient, and accurate means to diagnose the driver side power seat with the memory system option requires the use of a DRB® scan tool and the proper Diagnostic Procedures manual. The DRB® scan tool can provide confirmation that the PCI data bus is functional, that all of the electronic modules are sending and receiving the proper messages on the PCI data bus, and that the memory system is receiving the proper hard wired inputs and relaying the proper hard wired outputs to perform its driver side power seat functions.

DRIVER SEAT SWITCH (Continued)

For complete circuit diagrams, refer to **Power Seat** in Wiring Diagrams.

(1) Disconnect and isolate the battery negative cable.

(2) Remove the power seat switch from the outboard seat cushion side shield. Refer to **Seat Switch** in the Removal and Installation section of this group for the procedures.

(3) Use an ohmmeter to test the continuity of the power seat switch in each switch position. See the Power Seat Switch Continuity chart (Fig. 3) or (Fig. 4). If OK, refer to **Power Seat Track** or **Power Seat Recliner** in the Diagnosis and Testing section of this group. If not OK, replace the faulty power seat switch unit.

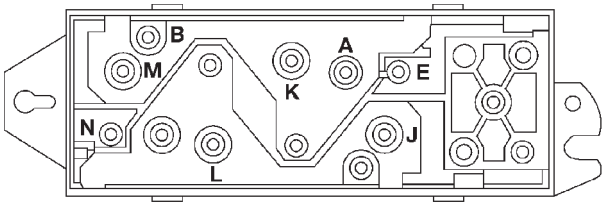

LEFT SIDE SHOWN
(ROTATE 180° FOR RIGHT SIDE)

POWER SEAT SWITCH

LEFT SWITCH POSITION	RIGHT SWITCH POSITION	CONTINUITY BETWEEN
OFF	OFF	B-N, B-J, B-M, B-E, B-L, B-K
VERTICAL UP	VERTICAL DOWN	A-J, A-N, B-M, B-E
VERTICAL DOWN	VERTICAL UP	A-E, A-M, B-N, B-J
HORIZONTAL FORWARD	HORIZONTAL REARWARD	A-K, B-L
FRONT TILT UP	FRONT TILT DOWN	A-J, B-E
FRONT TILT DOWN	FRONT TILT UP	A-E, B-J
REAR TILT UP	REAR TILT DOWN	A-N, B-M
REAR TILT DOWN	REAR TILT UP	A-M, B-N

80ba79fc

Fig. 3 Six-Way Power Seat Switch Continuity

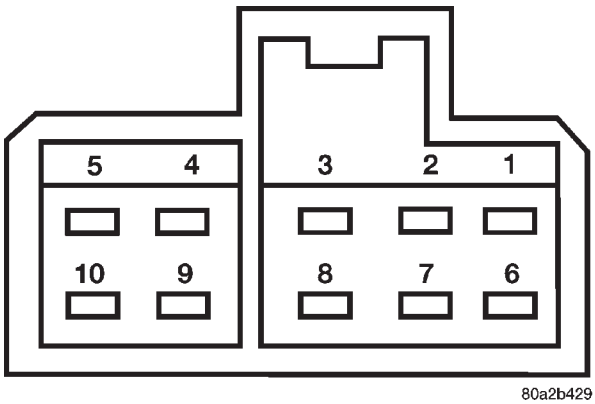

80a2b429

Fig. 4 Ten-Way Power Seat Switch Continuity

SWITCH POSITION	CONTINUITY BETWEEN PINS	
	LEFT SEAT	RIGHT SEAT
OFF	PIN 1 to 2 PIN 1 to 3 PIN 1 to 4 PIN 1 to 6 PIN 1 to 7 PIN 1 to 8 PIN 1 to 9 PIN 1 to 10	PIN 1 to 2 PIN 1 to 3 PIN 1 to 4 PIN 1 to 6 PIN 1 to 7 PIN 1 to 8 PIN 1 to 9 PIN 1 to 10
FRONT RISER UP	PIN 1 to 10 PIN 5 to 7	PIN 1 to 7 PIN 5 to 10
FRONT RISER DOWN	PIN 1 to 7 PIN 5 to 10	PIN 1 to 10 PIN 5 to 7
CENTER SWITCH FORWARD	PIN 1 to 3 PIN 5 to 6	PIN 1 to 3 PIN 5 to 6
CENTER SWITCH REARWARD	PIN 1 to 6 PIN 3 to 5	PIN 1 to 6 PIN 3 to 5
REAR RISER UP	PIN 1 to 9 PIN 5 to 8	PIN 1 to 8 PIN 5 to 9
REAR RISER DOWN	PIN 1 to 8 PIN 5 to 9	PIN 1 to 9 PIN 5 to 8
RECLINER UP	PIN 1 to 4 PIN 2 to 5	PIN 1 to 4 PIN 2 to 5
RECLINER DOWN	PIN 1 to 2 PIN 4 to 5	PIN 1 to 2 PIN 4 to 5

DRIVER SEAT SWITCH (Continued)

REMOVAL

(1) Disconnect and isolate the battery negative cable.

(2) On models with the ten-way power seat system only, using a trim stick or another suitable wide flat-bladed tool, gently pry the power seat and power recliner switch knobs off of the switch stems (Fig. 5).

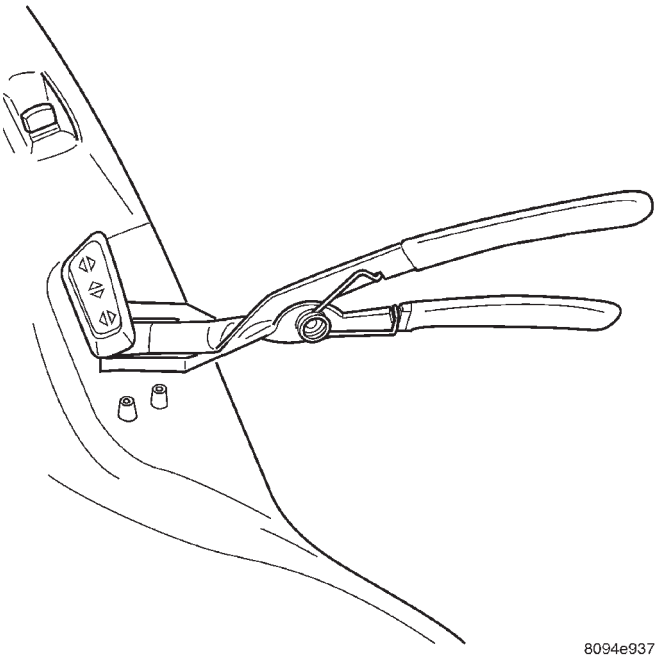

Fig. 5 REMOVING SWITCH CONTROL KNOBS

(3) Remove the three screws that secure the outboard seat cushion side shield to the seat cushion frame.

(4) Pull the outboard seat cushion side shield away from the seat cushion frame far enough to access the power seat switch wire harness connector.

(5) Disconnect the power seat wire harness connector from the power seat switch connector receptacle.

(6) Remove the two screws that secure the power seat switch to the inside of the outboard seat cushion side shield (Fig. 6) or (Fig. 7).

(7) Remove the power seat switch from the outboard seat cushion side shield.

INSTALLATION

(1) Position the power seat switch onto the outboard seat cushion side shield.

(2) Install and tighten the two screws that secure the power seat switch to the inside of the outboard seat cushion side shield. Tighten the screws to 1.5 N·m (14 in. lbs.).

(3) Reconnect the power seat wire harness connector to the power seat switch connector receptacle.

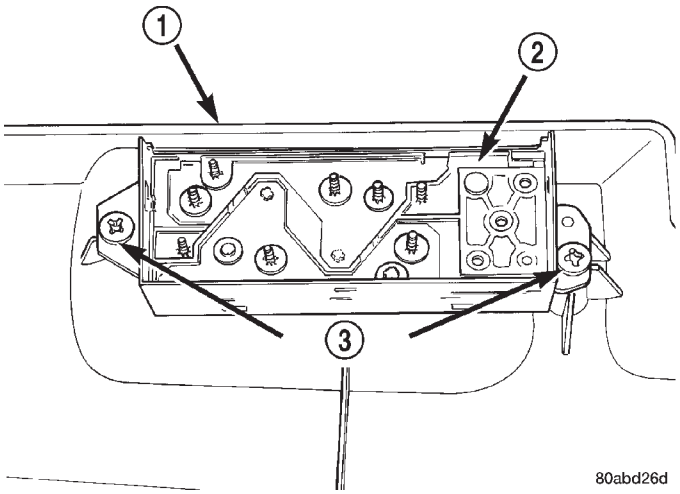

Fig. 6 Six-Way Power Seat

1 - SEAT SIDE SHIELD
2 - POWER SEAT SWITCH
3 - SCREWS

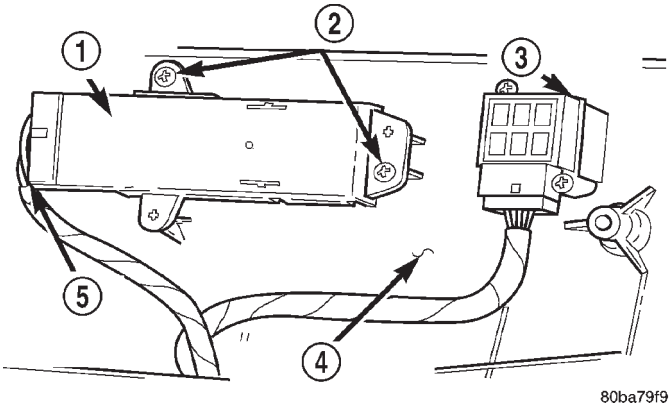

Fig. 7 Ten-Way Power Seat Switches Remove/Install

1 - POWER SEAT SWITCH
2 - SCREWS (2)
3 - POWER LUMBAR SWITCH
4 - SEAT CUSHION SIDE SHIELD
5 - WIRE HARNESS CONNECTOR

(4) Position the outboard seat cushion side shield onto the seat cushion frame

(5) Install and tighten the three screws that secure the outboard seat cushion side shield to the seat cushion frame. Tighten the screws to 1.5 N·m (14 in. lbs.).

(6) On models with the ten-way power seat system only, position the power seat and power recliner switch knobs onto the switch stems and push on them firmly and evenly until they snap into place.

(7) Reconnect the battery negative cable.

LUMBAR CONTROL SWITCH

DESCRIPTION

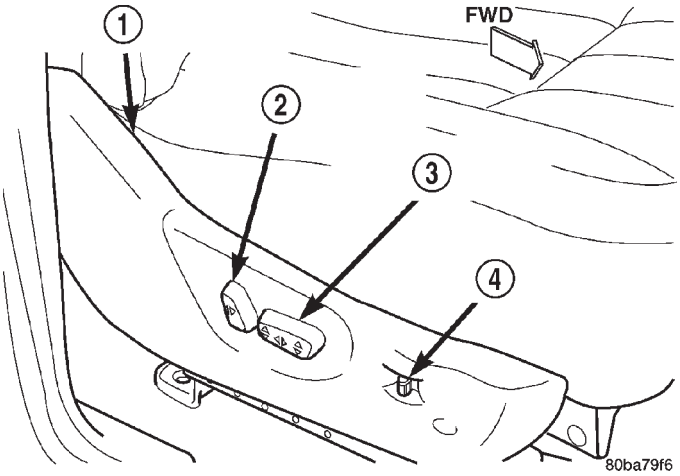

Fig. 8 Ten-Way Power Seat Switches

1 - OUTBOARD CUSHION SIDE SHIELD
2 - POWER SEAT RECLINER SWITCH
3 - POWER SEAT TRACK SWITCH
4 - POWER LUMBAR SWITCH

The ten-way power seat option includes an electrically operated lumbar support mechanism. A single two-way momentary power lumbar switch is located on the outboard seat cushion side shield of each front seat, just forward of the other power seat switches (Fig. 8). The power lumbar switch is secured to the back of the seat cushion side shield with two screws, and the switch paddle protrudes through a hole to the outside of the shield. The switch paddle is located in a shallow depression molded into the outer surface of the seat cushion side shield that helps to shroud it from unintentional actuation when entering or leaving the vehicle.

The power lumbar switches cannot be adjusted or repaired and, if faulty or damaged, they must be replaced.

OPERATION

When the power lumbar switch paddle is actuated, a battery feed and a ground path are applied through the switch contacts to the power lumbar adjuster motor. The motor operates to move the lumbar adjuster through its drive unit in the selected direction until the switch is released, or until the travel limit of the adjuster is reached. When the switch is moved in the opposite direction, the battery feed and ground path to the motor are reversed through the switch contacts. This causes the motor to run in the opposite direction.

The power lumbar switch should not be held applied in either direction after the adjuster has reached its travel limit. The power lumbar adjuster motor contains a self-resetting circuit breaker to protect it from overload. However, consecutive or frequent resetting of the circuit breaker must not be allowed to continue, or the motor may be damaged.

DIAGNOSIS & TESTING - POWER LUMBAR SWITCH

For complete circuit diagrams, refer to **Power Seat** in Wiring Diagrams.

(1) Disconnect and isolate the battery negative cable.

(2) Remove the power lumbar switch from the outboard seat cushion side shield. Refer to **Power Lumbar Switch** in the Removal and Installation section of this group for the procedures.

(3) Use an ohmmeter to test the continuity of the power lumbar switch in each switch position. See the Power Lumbar Switch Continuity chart (Fig. 9). If OK, refer to **Power Lumbar Adjuster** in the Diagnosis and Testing section of this group. If not OK, replace the faulty power lumbar switch.

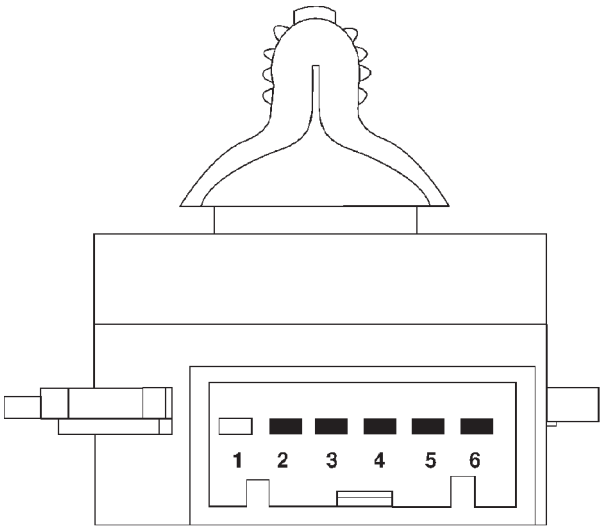

POWER LUMBAR SWITCH

LEFT SWITCH POSITION	RIGHT SWITCH POSITION	CONTINUITY BETWEEN
Off	Off	2-4, 3-5
Forward	Rearward	3-5, 4-6
Rearward	Forward	2-4, 3-6

80ba79fb

Fig. 9 Power Seat Switch Continuity

REMOVAL

(1) Disconnect and isolate the battery negative cable.

(2) Remove the three screws that secure the outboard seat cushion side shield to the seat cushion frame.

LUMBAR CONTROL SWITCH (Continued)

(3) Pull the outboard seat cushion side shield away from the seat cushion frame far enough to access the power lumbar switch wire harness connector.

(4) Disconnect the power seat wire harness connector from the power lumbar switch connector receptacle (Fig. 10).

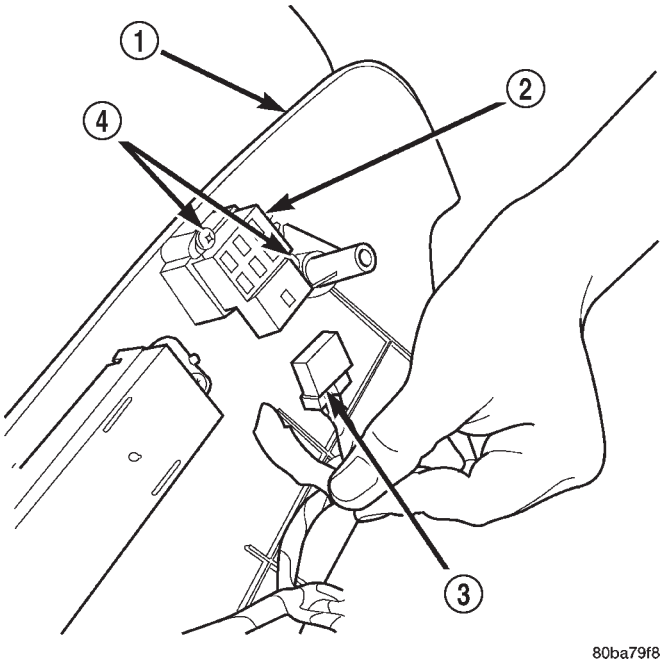

Fig. 10 Power Lumbar Switch Remove/Install

1 - OUTBOARD SEAT CUSHION SIDE SHIELD
2 - POWER LUMBAR SWITCH
3 - WIRE HARNESS CONNECTOR
4 - SCREWS (2)

(5) Remove the two screws that secure the power lumbar switch to the inside of the outboard seat cushion side shield.

(6) Remove the power lumbar switch from the outboard seat cushion side shield.

INSTALLATION

(1) Position the power lumbar switch onto the outboard seat cushion side shield.

(2) Install and tighten the two screws that secure the power lumbar switch to the inside of the outboard seat cushion side shield. Tighten the screws to 1.5 N·m (14 in. lbs.).

(3) Reconnect the power seat wire harness connector to the power lumbar switch connector receptacle.

(4) Position the outboard seat cushion side shield onto the seat cushion frame

(5) Install and tighten the three screws that secure the outboard seat cushion side shield to the seat cushion frame. Tighten the screws to 1.5 N·m (14 in. lbs.).

(6) Reconnect the battery negative cable.

LUMBAR MOTOR

DESCRIPTION

The ten-way power seat option includes an electrically operated lumbar support mechanism. The only visible evidence of this option is the separate power lumbar switch control paddle that is located on the outboard seat cushion side shield, just forward of the other power seat switch control knobs. The power lumbar adjuster and motor are concealed beneath the seat back trim cover and padding, where they are secured to a molded plastic back panel and to the seat back frame (Fig. 11).

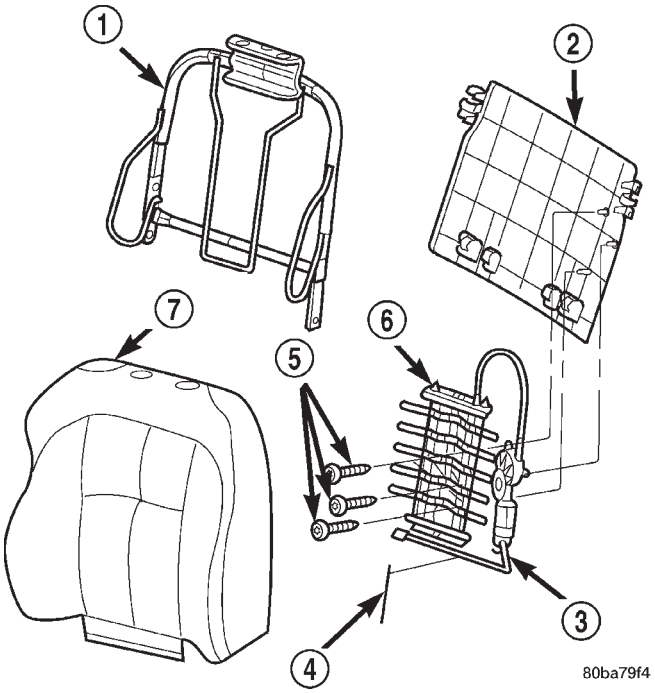

Fig. 11 Power Lumbar Adjuster

1 - SEAT BACK FRAME
2 - SEAT BACK PANEL
3 - SEAT WIRE HARNESS
4 - TIE WRAP
5 - SCREW (3)
6 - POWER LUMBAR ADJUSTER
7 - SEAT BACK TRIM COVER AND PADDING

The power lumbar adjuster cannot be repaired, and is serviced only as a unit with the seat back frame. If the power lumbar adjuster or the seat back frame are damaged or faulty, the entire seat back frame unit must be replaced. Refer to **Bucket Seat Back** in Body for the seat back frame service procedures.

OPERATION

The power lumbar adjuster mechanism includes a reversible electric motor that is secured to the inboard side of the seat back panel and is connected

LUMBAR MOTOR (Continued)

to a worm-drive gearbox. The motor and gearbox operate the lumbar adjuster mechanism in the center of the seat back by extending and retracting a cable that actuates a lever. The action of this lever compresses or relaxes a grid of flexible slats. The more this grid is compressed, the more the slats bow outward against the center of the seat back padding, providing additional lumbar support.

DIAGNOSIS & TESTING - POWER LUMBAR ADJUSTER

Actuate the power lumbar switch to move the power lumbar adjuster in each direction. The power lumbar adjuster should move in both directions. It should be noted that the power lumber adjuster normally operates very quietly and exhibits little visible movement. If the power lumbar adjuster fails to operate in only one direction, move the adjuster a short distance in the opposite direction and test again to be certain that the adjuster is not at its travel limit. If the power lumbar adjuster still fails to operate in only one direction, refer to **Power Lumbar Switch** in the Diagnosis and Testing section of this group. If the power lumbar adjuster fails to operate in either direction, perform the following tests. For complete circuit diagrams, refer to **Power Seat** in Wiring Diagrams.

(1) Check the power seat circuit breaker in the junction block. If OK, go to Step 2. If not OK, replace the faulty power seat circuit breaker.

(2) Check for battery voltage at the power seat circuit breaker in the junction block. If OK, go to Step 3. If not OK, repair the open fused B(+) circuit to the fuse in the Power Distribution Center as required.

(3) Remove the outboard seat cushion side shield from the seat. Disconnect the seat wire harness connector from the power lumbar switch connector receptacle. Check for battery voltage at the fused B(+) circuit cavity of the power seat wire harness connector for the power lumbar switch. If OK, go to Step 4. If not OK, repair the open fused B(+) circuit to the power seat circuit breaker in the junction block as required.

(4) Check for continuity between the ground circuit cavity of the power seat wire harness connector for the power lumbar switch and a good ground. There should be continuity. If OK, go to Step 5. If not OK, repair the open ground circuit to ground as required.

(5) Test the power lumbar switch. Refer to **Power Lumbar Switch** in the Diagnosis and Testing section of this group. If the switch tests OK, test the circuits of the power seat wire harness between the power lumbar adjuster motor and the power lumbar switch for shorts or opens. If the circuits check OK, replace the faulty seat back frame assembly. If the circuits are not OK, repair the power seat wire harness as required.

MEMORY SET SWITCH

DESCRIPTION

Vehicles equipped with the memory system have a memory switch mounted to the driver side front door trim panel. This switch is used to set and recall all of the memory system settings for up to two drivers. The memory switch is a resistor multiplexed unit that is hard wired to the Driver Door Module (DDM), which is also located on the driver side front door trim panel. The DDM sends out the memory system set and recall requests to the other electronic modules over the Programmable Communications Interface (PCI) data bus.

The memory switch cannot be adjusted or repaired and, if faulty or damaged, it must be replaced. For complete circuit diagrams, refer to **Power Mirror** in Wiring Diagrams.

OPERATION

The memory switch has three momentary switch buttons labeled Set, 1 and 2. The Driver 1 and Driver 2 buttons are back-lit with Light-Emitting Diodes (LED) for visibility, and are also color-coded to coincide with the color-coded Driver 1 and Driver 2 Remote Keyless Entry (RKE) transmitters. The Driver 1 memory switch button and RKE transmitter are black, and the Driver 2 memory switch button and RKE transmitter are gray. The memory switch Set button also has an LED that will illuminate and flash to indicate that the memory system is in the set mode. This LED will automatically be extinguished when a set request has been successfully completed.

See the owner's manual in the vehicle glove box for more information on the features, use and operation of the memory switch. For diagnosis of the memory switch, the DDM or the PCI data bus, the use of a DRB scan tool and the proper Diagnostic Procedures manual are recommended.

DIAGNOSIS & TESTING - MEMORY SWITCH

For complete circuit diagrams, refer to **Power Mirrors** in Wiring Diagrams.

(1) Disconnect and isolate the battery negative cable.

(2) Remove the driver side front door trim panel. Refer to **Front Door Trim Panel** in Body for the procedure.

(3) Disconnect the memory switch wire harness connector from the driver door module connector receptacle.

(4) Use an ohmmeter to test the resistances of the memory switch in each switch position. See the Memory Switch Test chart. If OK, refer to **Memory System** in the Diagnosis and Testing section of this group. If not OK, replace the faulty memory switch.

MEMORY SET SWITCH (Continued)

MEMORY SWITCH TEST

MEMORY SWITCH POSITION	RESISTANCE BETWEEN	RESISTANCE RANGE (OHMS)
NEUTRAL	A&D	14000 ± 1%
MEMORY 1	A&B	4600 ± 1%
MEMORY 2	A&B	1700 ± 1%
SET	A&B	300 ± 1%

REMOVAL

(1) Disconnect and isolate the battery negative cable.

(2) Remove the trim panel from the driver side front door. Refer to **Front Door Trim Panel** in Body for the procedure.

(3) Disconnect the memory switch wire harness connector from the driver door module connector receptacle.

(4) Remove the two screws that secure the memory switch to the back of the driver side front door trim panel.

(5) Remove the memory switch from the back of the driver side front door trim panel.

INSTALLATION

(1) Position the memory switch onto the back of the driver side front door trim panel.

(2) Install and tighten the two screws that secure the memory switch to the back of the driver side front door trim panel. Tighten the screws to 2.2 N·m (20 in. lbs.).

(3) Reconnect the memory switch wire harness connector to the driver door module connector receptacle.

(4) Install the trim panel onto the driver side front door. Refer to **Front Door Trim Panel** in Body for the procedure.

(5) Reconnect the battery negative cable.

PASSENGER SEAT SWITCH

DESCRIPTION

Two different power seat switches are used on this vehicle, depending upon the optional power seat system installed in the vehicle. The six-way power seats are each equipped with a switch featuring three switch control knobs ganged together on the outboard seat cushion side shield (Fig. 12). The ten-way power seats are each equipped with a switch featuring two knobs ganged together on the outboard seat cushion side shield (Fig. 13).

The switch units for both power seat types are secured to the back of the seat cushion side shield with two screws. However, the control knobs for the six-way power seat switch unit remain installed during switch unit removal and installation, while both knobs for the ten-way power seat switch unit must be removed.

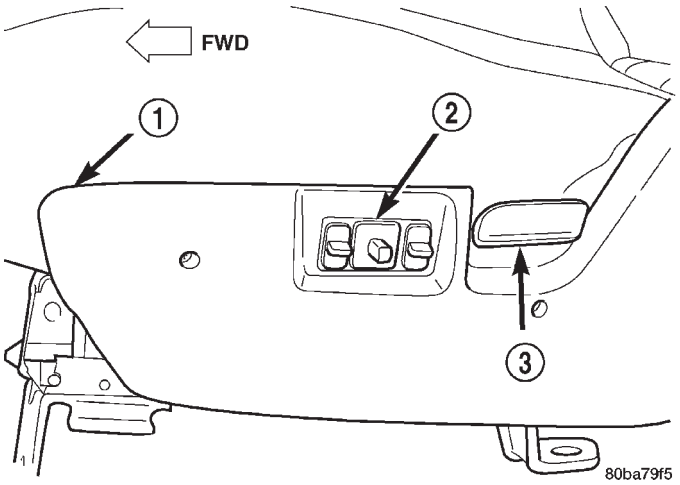

Fig. 12 Six-Way Power Seat Switches

1 - OUTBOARD SEAT CUSHION SIDE SHIELD
2 - POWER SEAT TRACK SWITCHES
3 - MECHANICAL SEAT BACK RECLINER LEVER

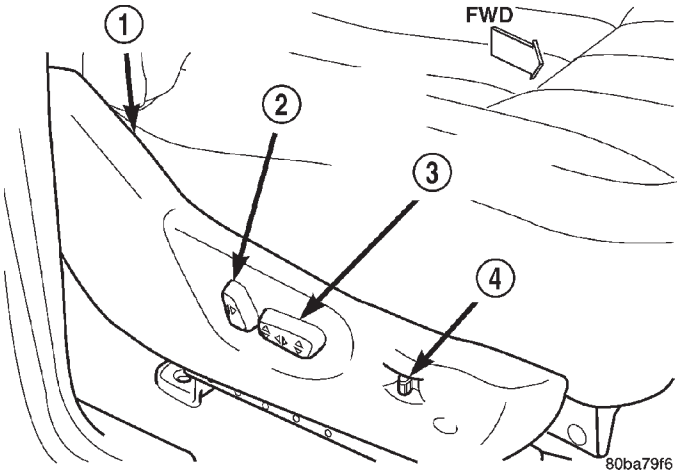

Fig. 13 Ten-Way Power Seat Switches

1 - OUTBOARD CUSHION SIDE SHIELD
2 - POWER SEAT RECLINER SWITCH
3 - POWER SEAT TRACK SWITCH
4 - POWER LUMBAR SWITCH

The individual switches in both power seat switch units cannot be repaired. If one switch is damaged or faulty, the entire power seat switch unit must be replaced.

OPERATION

The power seat tracks of both the six-way and the ten-way power seat systems can be adjusted in six

PASSENGER SEAT SWITCH (Continued)

different ways using the power seat switches. The ten-way system has the additional power seat recliner switch integral to the power seat switch and also has a separate, stand-alone switch to control the power lumbar adjuster. See the owner's manual in the vehicle glove box for more information on the power seat switch functions and the seat adjusting procedures.

When a power switch control knob or knobs are actuated, a battery feed and a ground path are applied through the switch contacts to the power seat track or recliner adjuster motor. The selected adjuster motor operates to move the seat track or recliner through its drive unit in the selected direction until the switch is released, or until the travel limit of the adjuster is reached. When the switch is moved in the opposite direction, the battery feed and ground path to the motor are reversed through the switch contacts. This causes the adjuster motor to run in the opposite direction.

No power seat switch should be held applied in any direction after the adjuster has reached its travel limit. The power seat adjuster motors each contain a self-resetting circuit breaker to protect them from overload. However, consecutive or frequent resetting of the circuit breaker must not be allowed to continue, or the motor may be damaged.

DIAGNOSIS & TESTING - SEAT SWITCH

Following are tests that will help to diagnose the hard wired components and circuits of the power seat system. However, if the vehicle is also equipped with the optional memory system, these tests may not prove conclusive in the diagnosis of the driver side power seat. In order to obtain conclusive testing of the driver side power seat with the memory system option, the Programmable Communications Interface (PCI) data bus network and all of the electronic modules that provide inputs to, or receive outputs from the memory system components must be checked.

The most reliable, efficient, and accurate means to diagnose the driver side power seat with the memory system option requires the use of a DRB® scan tool and the proper Diagnostic Procedures manual. The DRB® scan tool can provide confirmation that the PCI data bus is functional, that all of the electronic modules are sending and receiving the proper messages on the PCI data bus, and that the memory system is receiving the proper hard wired inputs and relaying the proper hard wired outputs to perform its driver side power seat functions.

For complete circuit diagrams, refer to **Power Seat** in Wiring Diagrams.

(1) Disconnect and isolate the battery negative cable.

(2) Remove the power seat switch from the outboard seat cushion side shield. Refer to **Seat Switch** in the Removal and Installation section of this group for the procedures.

(3) Use an ohmmeter to test the continuity of the power seat switch in each switch position. See the Power Seat Switch Continuity chart (Fig. 14) or (Fig. 15). If OK, refer to **Power Seat Track** or **Power Seat Recliner** in the Diagnosis and Testing section of this group. If not OK, replace the faulty power seat switch unit.

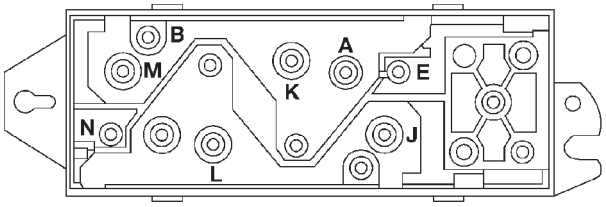

LEFT SIDE SHOWN
(ROTATE 180° FOR RIGHT SIDE)

POWER SEAT SWITCH

LEFT SWITCH POSITION	RIGHT SWITCH POSITION	CONTINUITY BETWEEN
OFF	OFF	B-N, B-J, B-M, B-E, B-L, B-K
VERTICAL UP	VERTICAL DOWN	A-J, A-N, B-M, B-E
VERTICAL DOWN	VERTICAL UP	A-E, A-M, B-N, B-J
HORIZONTAL FORWARD	HORIZONTAL REARWARD	A-K, B-L
FRONT TILT UP	FRONT TILT DOWN	A-J, B-E
FRONT TILT DOWN	FRONT TILT UP	A-E, B-J
REAR TILT UP	REAR TILT DOWN	A-N, B-M
REAR TILT DOWN	REAR TILT UP	A-M, B-N

80ba79fc

Fig. 14 Six-Way Power Seat Switch Continuity

PASSENGER SEAT SWITCH (Continued)

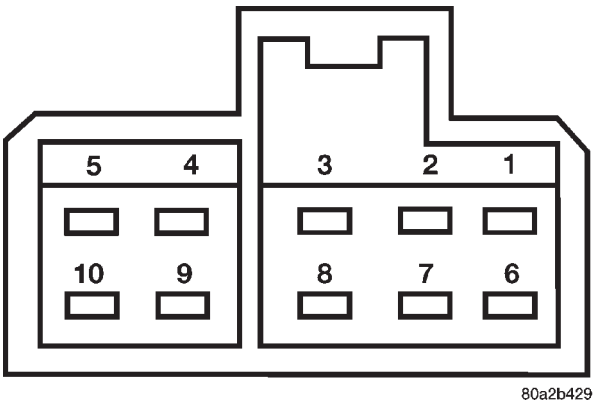

Fig. 15 Ten-Way Power Seat Switch Continuity

SWITCH POSITION	CONTINUITY BETWEEN PINS	
	LEFT SEAT	RIGHT SEAT
OFF	PIN 1 to 2 PIN 1 to 3 PIN 1 to 4 PIN 1 to 6 PIN 1 to 7 PIN 1 to 8 PIN 1 to 9 PIN 1 to 10	PIN 1 to 2 PIN 1 to 3 PIN 1 to 4 PIN 1 to 6 PIN 1 to 7 PIN 1 to 8 PIN 1 to 9 PIN 1 to 10
FRONT RISER UP	PIN 1 to 10 PIN 5 to 7	PIN 1 to 7 PIN 5 to 10
FRONT RISER DOWN	PIN 1 to 7 PIN 5 to 10	PIN 1 to 10 PIN 5 to 7
CENTER SWITCH FORWARD	PIN 1 to 3 PIN 5 to 6	PIN 1 to 3 PIN 5 to 6
CENTER SWITCH REARWARD	PIN 1 to 6 PIN 3 to 5	PIN 1 to 6 PIN 3 to 5
REAR RISER UP	PIN 1 to 9 PIN 5 to 8	PIN 1 to 8 PIN 5 to 9
REAR RISER DOWN	PIN 1 to 8 PIN 5 to 9	PIN 1 to 9 PIN 5 to 8
RECLINER UP	PIN 1 to 4 PIN 2 to 5	PIN 1 to 4 PIN 2 to 5
RECLINER DOWN	PIN 1 to 2 PIN 4 to 5	PIN 1 to 2 PIN 4 to 5

REMOVAL

(1) Disconnect and isolate the battery negative cable.

(2) On models with the ten-way power seat system only, using a trim stick or another suitable wide flat-bladed tool, gently pry the power seat and power recliner switch knobs off of the switch stems.

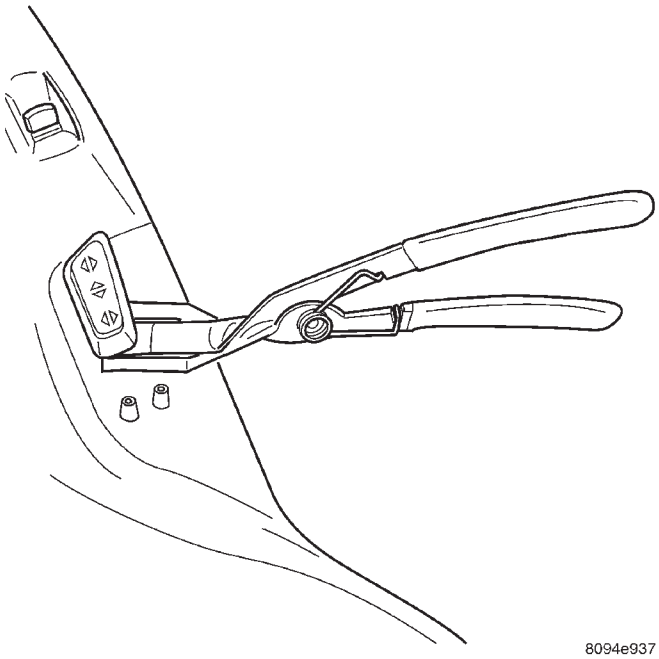

Fig. 16 REMOVING SWITCH CONTROL KNOBS

(3) Remove the three screws that secure the outboard seat cushion side shield to the seat cushion frame.

(4) Pull the outboard seat cushion side shield away from the seat cushion frame far enough to access the power seat switch wire harness connector.

(5) Disconnect the power seat wire harness connector from the power seat switch connector receptacle.

(6) Remove the two screws that secure the power seat switch to the inside of the outboard seat cushion side shield (Fig. 17) or (Fig. 18).

(7) Remove the power seat switch from the outboard seat cushion side shield.

INSTALLATION

(1) Position the power seat switch onto the outboard seat cushion side shield.

(2) Install and tighten the two screws that secure the power seat switch to the inside of the outboard seat cushion side shield. Tighten the screws to 1.5 N·m (14 in. lbs.).

(3) Reconnect the power seat wire harness connector to the power seat switch connector receptacle.

(4) Position the outboard seat cushion side shield onto the seat cushion frame

PASSENGER SEAT SWITCH (Continued)

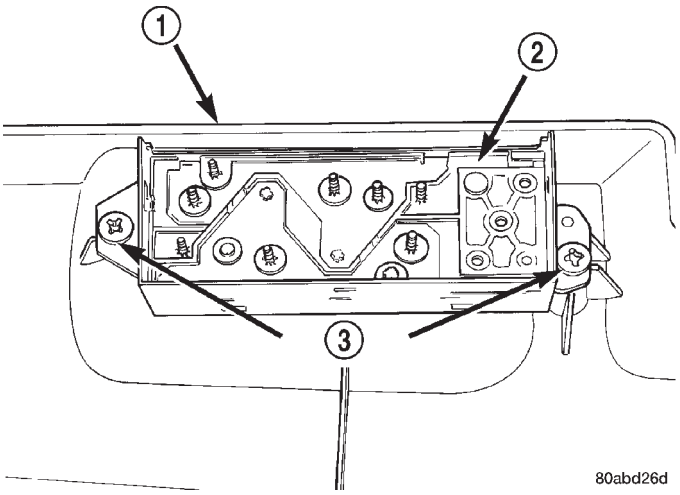

Fig. 17 Six-Way Power Seat

1 - SEAT SIDE SHIELD
2 - POWER SEAT SWITCH
3 - SCREWS

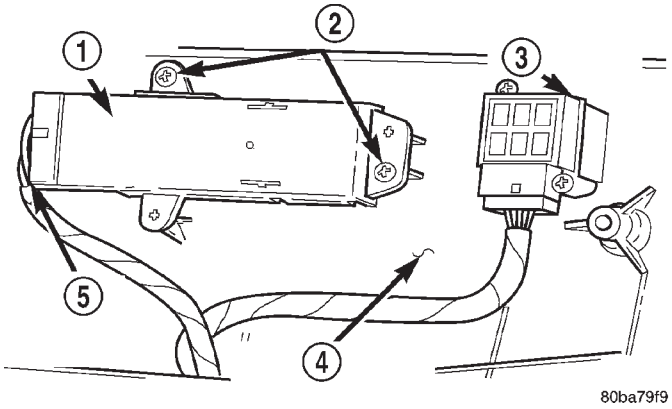

Fig. 18 Ten-Way Power Seat Switches Remove/ Install

1 - POWER SEAT SWITCH
2 - SCREWS (2)
3 - POWER LUMBAR SWITCH
4 - SEAT CUSHION SIDE SHIELD
5 - WIRE HARNESS CONNECTOR

(5) Install and tighten the three screws that secure the outboard seat cushion side shield to the seat cushion frame. Tighten the screws to 1.5 N·m (14 in. lbs.).

(6) On models with the ten-way power seat system only, position the power seat and power recliner switch knobs onto the switch stems and push on them firmly and evenly until they snap into place.

(7) Reconnect the battery negative cable.

RECLINER MOTOR

DESCRIPTION

The ten-way power seat option includes an electrically operated seat back recliner mechanism. The only visible evidence of this option is the separate power seat recliner switch control knob that is located on the outboard seat cushion side shield, just behind the other power seat switch control knob. The power seat recliner switch is integral to the ten-way power seat switch unit, but is actuated with a separate switch knob.

The power seat recliner unit is mounted in the place of a seat hinge on the outboard side of the seat (Fig. 19). The upper hinge plate of the power seat recliner mechanism is secured with two screws to the seat back frame and is concealed beneath the seat back trim cover and padding. The lower hinge plate and the motor and drive unit of the power seat recliner mechanism is secured with two screws to the seat cushion frame, and is concealed by the outboard seat cushion side shield.

The power seat recliner cannot be repaired. If the unit is faulty or damaged, it must be replaced. Refer to **Bucket Seat Recliner** in Body for the service procedure.

OPERATION

The power seat recliner includes a reversible electric motor that is secured to the lower hinge plate of the recliner unit. The motor is connected to a gearbox that moves the upper hinge plate of the power seat recliner through a screw-type drive unit. The driver side power seat recliner motor used on models equipped with the optional memory system also has a position potentiometer integral to the motor assembly, which electronically monitors the motor position.

DIAGNOSIS & TESTING - POWER SEAT RECLINER

Following are tests that will help to diagnose the hard wired components and circuits of the power seat system. However, if the vehicle is also equipped with the optional memory system, these tests may not prove conclusive in the diagnosis of the driver side power seat. In order to obtain conclusive testing of the driver side power seat with the memory system option, the Programmable Communications Interface (PCI) data bus network and all of the electronic modules that provide inputs to, or receive outputs from the memory system components must be checked.

The most reliable, efficient, and accurate means to diagnose the driver side power seat with the memory system option requires the use of a DRB® scan tool and the proper Diagnostic Procedures manual. The

RECLINER MOTOR (Continued)

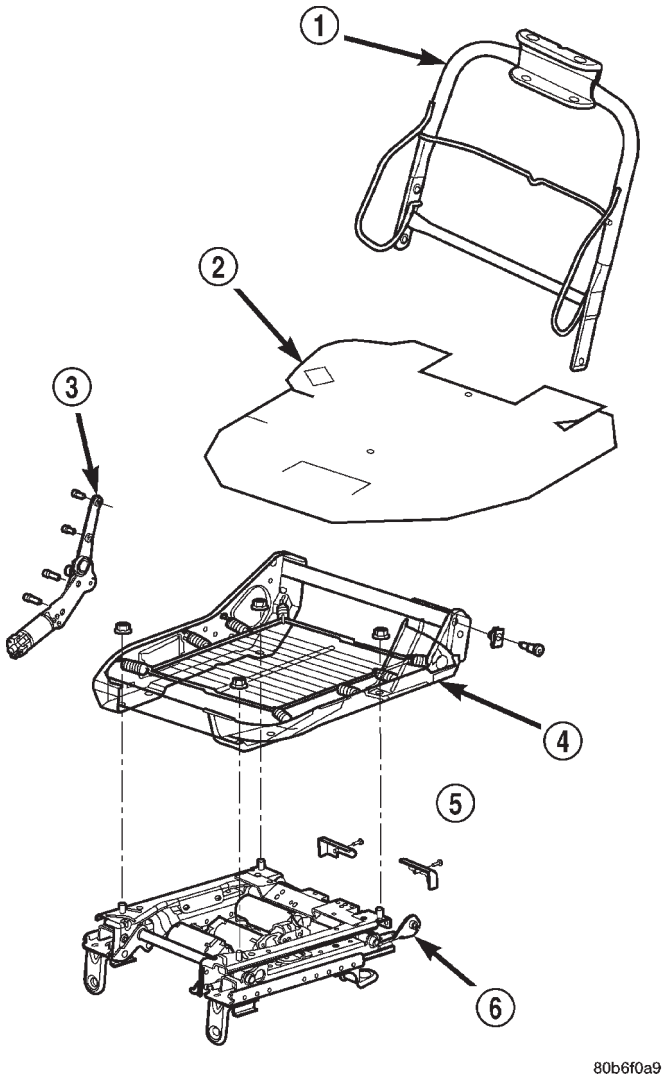

Fig. 19 Power Seat Recliner and Track

1 - SEAT BACK FRAME
2 - SEAT CUSHION PAD
3 - POWER RECLINER
4 - SEAT CUSHION FRAME
5 - SHIELD
6 - POWER SEAT TRACK ADJUSTER

DRB® scan tool can provide confirmation that the PCI data bus is functional, that all of the electronic modules are sending and receiving the proper messages on the PCI data bus, and that the memory system is receiving the proper hard wired inputs and relaying the proper hard wired outputs to perform its driver side power seat functions.

Actuate the power seat recliner switch to move the power seat recliner adjuster in each direction. The power seat recliner adjuster should move in both directions. If the power seat recliner adjuster fails to operate in only one direction, move the adjuster a short distance in the opposite direction and test again to be certain that the adjuster is not at its travel limit. If the power seat recliner adjuster still fails to operate in only one direction, refer to **Power Seat Switch** in the Diagnosis and Testing section of this group. If the power recliner adjuster fails to operate in either direction, perform the following tests. For complete circuit diagrams, refer to **Power Seat** in Wiring Diagrams.

(1) Check the power seat circuit breaker in the junction block. If OK, go to Step 2. If not OK, replace the faulty power seat circuit breaker.

(2) Check for battery voltage at the power seat circuit breaker in the junction block. If OK, go to Step 3. If not OK, repair the open fused B(+) circuit to the fuse in the Power Distribution Center as required.

(3) Remove the outboard seat cushion side shield from the seat. Disconnect the seat wire harness connector from the power seat switch connector receptacle. Check for battery voltage at the fused B(+) circuit cavity of the power seat wire harness connector for the power seat switch. If OK, go to Step 4. If not OK, repair the open fused B(+) circuit to the power seat circuit breaker in the junction block as required.

(4) Check for continuity between the ground circuit cavity of the power seat wire harness connector for the power seat switch and a good ground. There should be continuity. If OK, go to Step 5. If not OK, repair the open ground circuit to ground as required.

(5) Test the power seat switch. Refer to **Power Seat Switch** in the Diagnosis and Testing section of this group. If the switch tests OK, test the circuits of the power seat wire harness between the power seat recliner adjuster motor and the power seat switch for shorts or opens. If the circuits check OK, replace the faulty power seat recliner unit. If the circuits are not OK, repair the power seat wire harness as required.

POWER SEAT TRACK

DESCRIPTION

Both the six-way and the ten-way power seat options include a single electrically operated power seat track unit located under each front bucket seat. The power seat track unit replaces the standard equipment manual seat tracks. The lower half of the power seat track is secured at the front with two screws to the floor panel seat cross member, and at the rear with two screws to the floor panel. Four nuts secure the bottom of the seat cushion frame to four studs on the upper half of the power seat track unit.

The power seat track unit cannot be repaired, and is serviced only as a complete unit. If any component in this unit is faulty or damaged, the entire power seat track unit must be replaced. Refer to **Bucket Seat Track Adjuster** in Body for the service procedure.

POWER SEAT TRACK (Continued)

OPERATION

The power seat track unit includes three reversible electric motors that are secured to the upper half of the track unit (Fig. 20). Each motor moves the seat adjuster through a combination of worm-drive gearboxes and screw-type drive units. Each of the three driver side power seat track motors used on models equipped with the optional memory system also has a position potentiometer integral to the motor assembly, which electronically monitors the motor position.

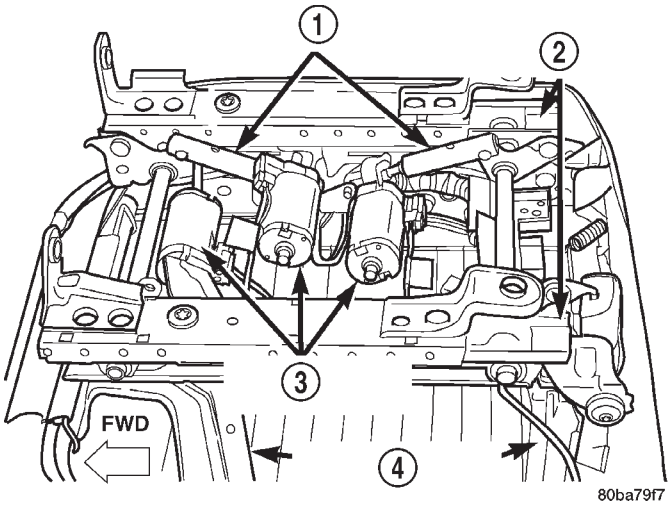

Fig. 20 Power Seat Track - Typical

1 - DRIVE UNITS
2 - LOWER SEAT TRACKS
3 - POWER SEAT MOTORS
4 - SEAT CUSHION FRAME

The front and rear of the seat are operated by two separate vertical adjustment motors. These motors can be operated independently of each other, tilting the entire seat assembly forward or rearward; or, they can be operated in unison by selecting the proper power seat switch functions, which will raise or lower the entire seat assembly. The third motor is the horizontal adjustment motor, which moves the seat track in the forward and rearward directions.

DIAGNOSIS & TESTING - POWER SEAT TRACK

Following are tests that will help to diagnose the hard wired components and circuits of the power seat system. However, if the vehicle is also equipped with the optional memory system, these tests may not prove conclusive in the diagnosis of the driver side power seat. In order to obtain conclusive testing of the driver side power seat with the memory system option, the Programmable Communications Interface (PCI) data bus network and all of the electronic modules that provide inputs to, or receive outputs from the memory system components must be checked.

The most reliable, efficient, and accurate means to diagnose the driver side power seat with the memory system option requires the use of a DRB® scan tool and the proper Diagnostic Procedures manual. The DRB® scan tool can provide confirmation that the PCI data bus is functional, that all of the electronic modules are sending and receiving the proper messages on the PCI data bus, and that the memory system is receiving the proper hard wired inputs and relaying the proper hard wired outputs to perform its driver side power seat functions.

Actuate the power seat switch to move all three power seat track adjusters in each direction. The power seat track adjusters should move in each of the selected directions. If a power seat track adjuster fails to operate in only one direction, move the adjuster a short distance in the opposite direction and test again to be certain that the adjuster is not at its travel limit. If the power seat track adjuster still fails to operate in only one direction, refer to **Power Seat Switch** in the Diagnosis and Testing section of this group. If the power seat track adjuster fails to operate in more than one direction, perform the following tests. For complete circuit diagrams, refer to **Power Seat** in Wiring Diagrams.

(1) Check the power seat circuit breaker in the junction block. If OK, go to Step 2. If not OK, replace the faulty power seat circuit breaker.

(2) Check for battery voltage at the power seat circuit breaker in the junction block. If OK, go to Step 3. If not OK, repair the open fused B(+) circuit to the fuse in the Power Distribution Center as required.

(3) Remove the outboard seat cushion side shield from the seat. Disconnect the seat wire harness connector from the power seat switch connector receptacle. Check for battery voltage at the fused B(+) circuit cavity of the power seat wire harness connector for the power seat switch. If OK, go to Step 4. If not OK, repair the open fused B(+) circuit to the power seat circuit breaker in the junction block as required.

(4) Check for continuity between the ground circuit cavity of the power seat wire harness connector for the power seat switch and a good ground. There should be continuity. If OK, go to Step 5. If not OK, repair the open ground circuit to ground as required.

(5) Test the power seat switch. Refer to **Power Seat Switch** in the Diagnosis and Testing section of this group. If the switch tests OK, test the circuits of the power seat wire harness between the inoperative power seat track adjuster motor and the power seat switch for shorts or opens. If the circuits check OK, replace the faulty power seat track unit. If the circuits are not OK, repair the power seat wire harness as required.

POWER WINDOWS

TABLE OF CONTENTS

page

POWER WINDOWS
DESCRIPTION 32
OPERATION. 33
DIAGNOSIS AND TESTING 33
POWER WINDOW SYSTEM 33
POWER WINDOW SWITCH
DESCRIPTION 35
OPERATION. 35
DIAGNOSIS AND TESTING 36
REAR DOOR POWER WINDOW SWITCH 36
REMOVAL 36
INSTALLATION. 36
WINDOW MOTOR
DESCRIPTION 37
OPERATION. 37
DIAGNOSIS AND TESTING 37
DIAGNOSIS AND TESTING - POWER WINDOW MOTOR. 37
REMOVAL 38
INSTALLATION. 38

POWER WINDOWS

DESCRIPTION

Power operated driver side and passenger side front and rear door windows are standard factory-installed equipment on this model. The power window system allows each of the door windows to be raised or lowered electrically by operating a switch on the trim panel for that door. Additionally, the master switches on the driver side front door trim panel allow of the windows to be operated from the driver seat position. A power window lockout switch on the driver side front door trim panel will allow the driver to disable all of the passenger door window switches.

The power window system operates on ignition switched battery current supplied through a fuse in the junction block, only when the ignition switch is in the On position. However, a unique feature of this system will allow the power windows to be operated for up to forty-five seconds after the ignition switch is turned to the Off position, or until a front door is opened, whichever occurs first.

An auto-down feature allows the driver side front door window to be lowered all the way, even if the window switch is released. The driver side front door window switch must be depressed in the down direction to a second detent to begin an auto-down event. Depressing the switch again in any direction will stop the window movement and cancel the auto-down event.

This group covers the following components of the power window system:

- Power window switches
- Power window motors.

Certain functions and features of the power window system rely upon resources shared with other electronic modules in the vehicle over the Programmable Communications Interface (PCI) data bus network. The PCI data bus network allows the sharing of sensor information. This helps to reduce wire harness complexity, internal controller hardware, and component sensor current loads. At the same time, this system provides increased reliability, enhanced diagnostics, and allows the addition of many new feature capabilities. For diagnosis of these electronic modules or of the PCI data bus network, the use of a DRB scan tool and the proper Diagnostic Procedures manual are recommended.

The other electronic modules that may affect power window system operation are as follows:

- **Body Control Module (BCM)** - (Refer to 8 - ELECTRICAL/ELECTRONIC CONTROL MODULES/BODY CONTROL/CENTRAL TIMER MODUL - DESCRIPTION) for more information.
- **Driver Door Module (DDM)** -(Refer to 8 - ELECTRICAL/ELECTRONIC CONTROL MODULES/DRIVER DOOR MODULE - DESCRIPTION) for more information.
- **Passenger Door Module (PDM)** - (Refer to 8 - ELECTRICAL/ELECTRONIC CONTROL MODULES/DRIVER DOOR MODULE - DESCRIPTION) for more information.

This group covers diagnosis and service of only the electrical components in the power window system. For service of mechanical components, such as the regulator, lift plate, window tracks, or glass refer to Body. Refer to the appropriate wiring information. The wiring information includes wiring diagrams, proper wire and connector repair procedures, details of wire harness routing and retention, connector pinout information and location views for the various wire harness connectors, splices and grounds. Following are general descriptions of the major components in the power window system.

POWER WINDOWS (Continued)

OPERATION

The power window system includes the Driver Door Module (DDM) and Passenger Door Module (PDM), which are mounted in their respective front door, the rear door power window switches mounted on the rear doors, and the power window motors mounted to the window regulator in each door. The DDM houses four master power window switches, the power window lockout switch and the control logic for the driver side front and rear door power windows. The PDM houses the passenger side front door power window switch and the control logic for the passenger side front and rear door power windows.

When a master power window switch on the DDM is used to operate a passenger side power window, the DDM sends the window positioning messages to the PDM over the Programmable Communications Interface (PCI) data bus. The PDM responds to these messages by sending control outputs to move the passenger side power window motors. In addition, when the power window lockout switch in the DDM is actuated to disable power window operation, this is accomplished through a lockout message sent to the PDM over the PCI data bus.

The Body Control Module (BCM) also supports and controls certain features of the power window system. The BCM receives a hard wired input from the ignition switch. The programming in the BCM allows it to process the information from this input and send ignition switch status messages to the DDM and the PDM over the PCI data bus. The DDM and PDM use this information and hard wired inputs from the front door ajar switches to control the lighting of the power window switch lamps, and to control the operation of the power window after ignition-off feature.

See the owner's manual in the vehicle glove box for more information on the features, use and operation of the power window system.

DIAGNOSIS AND TESTING

Following are tests that will help to diagnose the hard wired components and circuits of the power window system. However, these tests may not prove conclusive in the diagnosis of this system. In order to obtain conclusive testing of the power window system, the Programmable Communications Interface (PCI) data bus network and all of the electronic modules that provide inputs to, or receive outputs from the power window system components must be checked.

The most reliable, efficient, and accurate means to diagnose the power window system requires the use of a DRB scan tool and the proper Diagnostic Procedures manual. The DRB scan tool can provide confirmation that the PCI data bus is functional, that all of the electronic modules are sending and receiving the proper messages on the PCI data bus, and that the power window motors are being sent the proper hard wired outputs by the door modules for them to perform their power window system functions.

For complete circuit diagrams, refer to the appropriate wiring information. The wiring information includes wiring diagrams, proper wire and connector repair procedures, details of wire harness routing and retention, connector pin-out information and location views for the various wire harness connectors, splices and grounds.

ALL WINDOWS INOPERATIVE

(1) Check the operation of the power lock switch on the driver side front door. If all of the doors lock and unlock, but none of the power windows operate, use a DRB scan tool and the proper Diagnostic Procedures manual to check the Body Control Module (BCM), the Driver Door Module (DDM) and the PCI data bus for proper operation. If not OK, go to Step 2.

(2) Check the operation of the power lock switch on the passenger side front door. If the passenger doors lock and unlock, but the driver side front door does not, go to Step 5. If all of the power locks and power windows are inoperative from both front doors, go to Step 3.

(3) Check the fused B(+) fuse in the Power Distribution Center (PDC). If OK, go to Step 4. If not OK, repair the shorted circuit or component as required and replace the faulty fuse.

(4) Check for battery voltage at the fused B(+) fuse in the PDC. If OK, go to Step 5. If not OK, repair the open fused B(+) circuit to the battery as required.

(5) Disconnect and isolate the battery negative cable. Remove the trim panel from the driver side front door. Disconnect the 15-way door wire harness connector from the DDM connector receptacle. Check for continuity between the ground circuit cavity of the 15-way door wire harness connector for the DDM and a good ground. There should be continuity. If OK, go to Step 6. If not OK, repair the open ground circuit to ground as required.

(6) Reconnect the battery negative cable. Check for battery voltage at the fused B(+) circuit cavity of the 15-way door wire harness connector for the DDM. If OK, replace the faulty DDM. If not OK, repair the open fused B(+) circuit to the fuse in the PDC as required.

PASSENGER SIDE FRONT AND REAR WINDOWS INOPERATIVE

If the driver side front and rear power windows operate, but the passenger side front and rear do not, use a DRB scan tool and the proper Diagnostic Procedures manual to check the PCI data bus for proper operation.

POWER WINDOWS (Continued)

ONE WINDOW INOPERATIVE

The window glass and regulator mechanism must be free to slide up and down for the power window motor to function properly. If the window glass and regulator is not free to move up and down, the motor will overload and trip the integral circuit breaker. To determine if the window glass and regulator are free, disconnect the regulator plate from the glass. Then slide the window up and down by hand.

There is an alternate method to check if the window glass and regulator mechanism is free. Position the glass between the up and down stops. Then, shake the glass in the door. Check that the glass can be moved slightly from side to side, front to rear, and up and down. Then check that the glass is not bound tight in the tracks.

If the window glass and regulator mechanism is free, refer to **Door Module** in Electrical, Power Windows. If the glass is not free, inspect the window glass mounting and operating hardware for damage or improperly installed components. Refer to **Body** to check for proper installation or damage of the window glass mounting and operating hardware.

DOOR MODULE

NOTE: The following tests may not prove conclusive in the diagnosis of this component. The most reliable, efficient, and accurate means to diagnose this component requires the use of a DRB scan tool and the proper Diagnostic Procedures manual.

If the problem being diagnosed is a rear door window that does not operate from the rear door switch, but does operate from the master switch on the driver side front door, (Refer to 8 - ELECTRICAL/ POWER WINDOWS/POWER WINDOW SWITCH - DIAGNOSIS AND TESTING). If the problem is a passenger side front or rear window that operates from the switch on that door, but does not operate from the master switch on the driver side front door, use a DRB scan tool and the proper Diagnostic Procedures manual to diagnose the circuitry of both door modules and the PCI data bus. For complete circuit diagrams, refer to the appropriate wiring information. The wiring information includes wiring diagrams, proper wire and connector repair procedures, details of wire harness routing and retention, connector pin-out information and location views for the various wire harness connectors, splices and grounds.

(1) Disconnect and isolate the battery negative cable. Remove the trim panel from the front door, but do not disconnect the door wire harness connectors from the door module. Go to Step 2.

(2) Check the 15-way door wire harness connector for the door module to see that it is fully seated in the door module connector receptacle. If OK, go to Step 3. If not OK, properly connect the 15-way door wire harness connector for the door module to the door module connector receptacle.

(3) Disconnect the 15-way door wire harness connector from the door module connector receptacle. Check for continuity between the ground circuit cavity of the 15-way door wire harness connector for the door module and a good ground. There should be continuity. If OK, go to Step 4. If not OK, repair the open ground circuit to ground as required.

(4) Connect the battery negative cable. Check for battery voltage at the fused B(+) circuit cavity of the 15-way door wire harness connector for the door module. If OK, go to Step 5. If not OK, repair the open fused B(+) circuit to the fuse in the Power Distribution Center (PDC) as required.

(5) If the inoperative window is on a front door, go to Step 6. If the inoperative window is on a rear door go to Step 9.

(6) Disconnect and isolate the battery negative cable. Disconnect the door wire harness connector from the inoperative power window motor wire harness connector. Check for continuity between the front window driver up circuit cavity of the 15-way door wire harness connector for the door module and a good ground. Repeat the check for the front window driver down circuit. In each case there should be no continuity. If OK, go to Step 7. If not OK, repair the shorted front window driver up or down circuit as required.

(7) Check for continuity between the front window driver up circuit cavities of the 15-way door wire harness connector for the door module and the door wire harness connector for the power window motor. Repeat the check for the front window driver down circuit. In each case there should be continuity. If OK, go to Step 8. If not OK, repair the open front window driver up or down circuit as required.

(8) Reconnect the 15-way door wire harness connector back into the door module connector receptacle. Connect the battery negative cable. Connect the probes of a reversible DC digital voltmeter to the door wire harness connector for the power window motor. Observe the voltmeter while actuating the switch for that window in the up and down directions. There should be battery voltage for as long as the switch is held in both the up and down positions, and no voltage in the neutral position. If OK,(Refer to 8 - ELECTRICAL/POWER WINDOWS/WINDOW MOTOR - DIAGNOSIS AND TESTING). If not OK, replace the faulty door module.

(9) Check the rear door power window switch continuity. (Refer to 8 - ELECTRICAL/POWER WINDOWS/POWER WINDOW SWITCH - DIAGNOSIS AND TESTING). If OK, go to Step 10. If not OK, replace the faulty rear door power window switch.

POWER WINDOWS (Continued)

(10) Disconnect and isolate the battery negative cable. Reconnect the door wire harness connector to the rear door power window switch. Disconnect the door wire harness connector from the inoperative power window motor wire harness connector. Check for continuity between the rear window driver up circuit cavity of the 15-way door wire harness connector for the door module and a good ground. Repeat the check for the rear window driver down circuit. In each case there should be no continuity. If OK, go to Step 11. If not OK, repair the shorted rear window driver up or down circuit as required.

(11) Check for continuity between the rear window driver up circuit cavities of the 15-way door wire harness connector for the door module and the power window motor wire harness connector. Repeat the check for the rear window driver down circuit. In each case there should be continuity. If OK, go to Step 12. If not OK, repair the open rear window driver up or down circuit as required.

NOTE: The door module feeds battery current to both terminals of the rear door power window motors when the power window lockout switch is in the Unlock position, until the master window switch on the driver side front door is actuated. The door module feeds ground to both terminals of the rear door power window motor when the power window lockout switch is in the Lock position, until the master window switch on the driver side front door is actuated.

(12) Reconnect the 15-way door wire harness connector for the door module to the door module connector receptacle. Connect the battery negative cable. Check for battery voltage at each cavity in the door wire harness connector for the power window motor. Each cavity should have battery voltage when the power window switch is in the neutral position. Each cavity should also have battery voltage in one other switch position, either up or down, and zero volts with the switch in the opposite position. If OK, (Refer to 8 - ELECTRICAL/POWER WINDOWS/WINDOW MOTOR - DIAGNOSIS AND TESTING). If not OK, replace the faulty door module.

POWER WINDOW SWITCH

DESCRIPTION

The power window motors are controlled by a two-way momentary switch mounted on the trim panel of each passenger door, and four two-way momentary switches on the driver side front door trim panel. The driver side front door trim panel also has a two-position power window lockout switch. Each power window switch, except the lockout switch, is illuminated by a Light-Emitting Diode (LED) that is integral to the switch paddle.

The front door power window switches and the power window lockout switch are integral to the Driver Door Module (DDM) or Passenger Door Module (PDM), respectively. The front door power window switches and their lamps cannot be adjusted or repaired and, if faulty or damaged, the entire DDM or PDM unit must be replaced. The rear door power window switches and their lamps cannot be adjusted or repaired but, if faulty or damaged, only the affected rear door power window switch must be replaced. (Refer to 8 - ELECTRICAL/ELECTRONIC CONTROL MODULES/ DRIVER DOOR MODULE - REMOVAL).

OPERATION

The front door power window switches provide an up or down (or lock and unlock signal in the case of the lockout switch) to the door module circuitry. The Driver Door Module (DDM) circuitry controls the output to the driver side front and rear door power window motors, and supplies electrical current as required for the stand-alone operation of the driver side rear door power window switch. The Passenger Door Module (PDM) circuitry controls the output to the passenger side front and rear door power window motors, and supplies electrical current as required for the stand-alone operation of the passenger side rear door power window switch.

When a DDM-integrated master power window switch for a passenger side window is actuated, or when the power window lockout switch is actuated to disable the passenger door power windows, the DDM circuitry sends a message to the PDM over the Programmable Communications Interface (PCI) data bus to control the output to that power window motor(s).

The power window switch for the driver side front door power window has two detent positions in the Down direction. The first detent provides normal power window down operation. If this switch is depressed to the second detent, the Auto Down circuitry of the DDM is activated. The Auto-Down circuitry will automatically move the driver side front door window to its fully lowered position, even if the power window switch is released. The Auto-Down event will be automatically cancelled and the window movement will be stopped if the DDM circuitry detects a second input from the driver side front door power window switch, in either direction.

Each power window switch, except the lockout switch, is illuminated by a Light-Emitting Diode (LED) when the ignition switch is turned to the On position. However, when the lockout switch is placed in the Lock position, the LED for the locked-out front and rear passenger door power window switches is turned off.

POWER WINDOW SWITCH (Continued)

See the owner's manual in the vehicle glove box for more information on the features, use and operation of the power window switches.

DIAGNOSIS AND TESTING

The diagnosis found here applies only to the rear door power window switches. If the problem being diagnosed is an inoperative power window switch illumination lamp, but the power window switch operates as designed, replace the faulty rear door power window switch. For complete circuit diagrams, refer to the appropriate wiring information. The wiring information includes wiring diagrams, proper wire and connector repair procedures, details of wire harness routing and retention, connector pin-out information and location views for the various wire harness connectors, splices and grounds.

(1) Disconnect and isolate the battery negative cable.

(2) Remove the power window switch from the rear door trim panel. (Refer to 8 - ELECTRICAL/ POWER WINDOWS/POWER WINDOW SWITCH - REMOVAL).

(3) Check the rear door power window switch continuity as shown in the Rear Door Power Window Switch Continuity chart (Fig. 1). If OK, (Refer to 8 - ELECTRICAL/POWER WINDOWS/WINDOW MOTOR - DIAGNOSIS AND TESTING). If not OK, replace the faulty rear door power window switch.

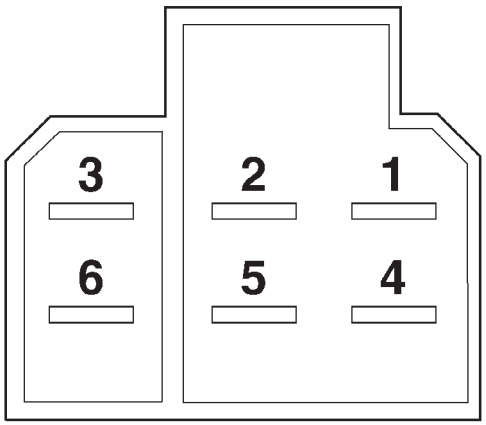

809b0d52

Fig. 1 Rear Door Power Window Switch Continuity

SWITCH POSITION	CONTINUITY BETWEEN
LED	3 AND 6
OFF	1 AND 2
OFF	4 AND 5
FORWARD	1 AND 2
FORWARD	5 AND 6
REARWARD	2 AND 6
REARWARD	4 AND 5

REMOVAL

(1) Disconnect and isolate the battery negative cable.

(2) Remove the trim panel from the rear door. (Refer to 23 - BODY/DOORS - REAR/TRIM PANEL - REMOVAL) for the procedures.

(3) Using a trim stick or another suitable wide flat-bladed tool, gently pry the sides of the switch receptacle on the back of the rear door trim panel away from the perimeter of the power window switch to release the switch from the receptacle (Fig. 2).

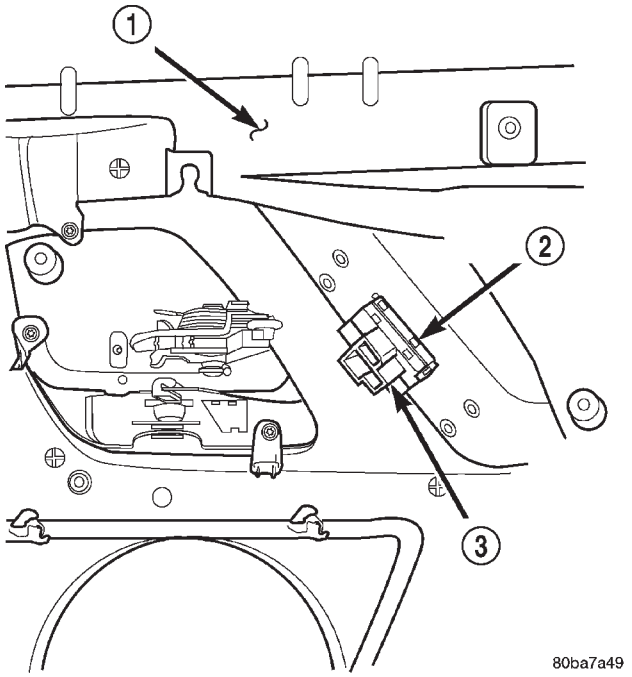

Fig. 2 Rear Door Power Window Switch Remove/ Install

1 - REAR DOOR TRIM PANEL
2 - TRIM PANEL RECEPTACLE
3 - POWER WINDOW SWITCH

(4) Remove the power window switch from the rear door trim panel switch receptacle.

INSTALLATION

(1) Position the power window switch to the rear door trim panel switch receptacle.

(2) Press firmly and evenly on the back of the power window switch until it snaps into rear door trim panel switch receptacle.

(3) Install the trim panel onto the rear door. (Refer to 23 - BODY/DOORS - REAR/TRIM PANEL - INSTALLATION) for the procedures.

(4) Reconnect the battery negative cable.

WINDOW MOTOR

DESCRIPTION

Power operated front and rear door windows are standard equipment on this model. Each door has a permanent magnet reversible electric motor with an integral right angle gearbox mechanism that operates the window regulator. In addition, each power window motor is equipped with an integral self-resetting circuit breaker to protect the motor from overloads.

The power window motor gearbox housing is secured to the window regulator drum housing with screws. The window regulators used in all four doors are single vertical post cable-and-drum type. A molded plastic slider guided by the post is driven by the regulator cables. The slider raises and lowers the window glass through a steel lift plate attachment. Front and rear glass channels within each door guide and stabilize each end of the glass.

The power window motor and gearbox assembly cannot be repaired and, if faulty or damaged, the entire power window motor and gearbox unit must be replaced. The window regulators are available for service. (Refer to 23 - BODY/DOOR - FRONT/WINDOW REGULATOR - REMOVAL) or (Refer to 23 - BODY/DOORS - REAR/WINDOW REGULATOR - REMOVAL) for the regulator service procedures.

OPERATION

A positive and negative battery connection to the two motor terminals will cause the power window motor to rotate in one direction. Reversing the current through these same two connections will cause the motor to rotate in the opposite direction.

When the power window motor operates, it rotates the regulator cable drum through its gearbox. The window regulator cable drum is connected through two cables to the plastic slider on the vertical post. As the cable drum rotates, it lets cable out on one side of the drum, and takes cable in on the other side of the drum. The changes in cable length move the slider up or down the vertical post, raising or lowering the window glass.

If the window regulator or window glass bind, encounter obstructions, or reach their travel limits it overloads the power window motor. The overloading condition causes the power window motor self-resetting circuit breaker to open, which stops the motor from running.

DIAGNOSIS AND TESTING

Before you proceed with this diagnosis, confirm proper switch operation. (Refer to 8 - ELECTRICAL/ELECTRONIC CONTROL MODULES/DRIVER DOOR MODULE - OPERATION) or (Refer to 8 - ELECTRICAL/POWER WINDOWS/POWER WINDOW SWITCH - OPERATION). For complete circuit diagrams, refer to the appropriate wiring information. The wiring information includes wiring diagrams, proper wire and connector repair procedures, details of wire harness routing and retention, connector pin-out information and location views for the various wire harness connectors, splices and grounds.

(1) Remove the trim panel from the door with the inoperative power window. (Refer to 23 - BODY/DOOR - FRONT/TRIM PANEL - REMOVAL) or (Refer to 23 - BODY/DOORS - REAR/TRIM PANEL - REMOVAL) for the procedures.

(2) Disconnect the door wire harness connector from the power window motor wire harness connector. Apply battery current to one cavity of the power window motor wire harness connector, and apply ground to the other cavity of the connector. The power window motor should operate in one direction. Remember, if the window is in the full up or full down position, the motor will not operate in that direction by design. If OK, go to Step 3. If not OK, replace the faulty power window motor.

(3) Reverse the battery and ground connections to the two cavities of the power window motor wire harness connector. The power window motor should now operate in the other direction. Remember, if the window is in the full up or full down position, the motor will not operate in that direction by design. If OK, go to Step 4. If not OK, replace the faulty power window motor.

(4) If the power window motor operates in both directions, check the operation of the window glass and regulator mechanism through its complete up and down travel. There should be no binding or sticking of the window glass or regulator mechanism through the entire travel range. If not OK, (Refer to 23 - BODY/DOOR - FRONT/WINDOW REGULATOR - REMOVAL) or (Refer to 23 - BODY/DOORS - REAR/WINDOW REGULATOR - REMOVAL) to check for proper installation or damage of the window glass mounting and operating hardware.

WINDOW MOTOR (Continued)

REMOVAL

(1) Disconnect and isolate the battery negative cable.

(2) Remove the window regulator from the door. (Refer to 23 - BODY/DOOR - FRONT/WINDOW REGULATOR - REMOVAL) or (Refer to 23 - BODY/DOORS - REAR/WINDOW REGULATOR - REMOVAL) for the procedures.

(3) Place the window regulator on a suitable work surface and remove the screws that secure the power window motor to the window regulator.

(4) Remove the power window motor from the window regulator.

INSTALLATION

(1) Position the power window motor onto the window regulator.

(2) Install and tighten the screws that secure the power window motor to the window regulator. Tighten the screws to 9 N·m (80 in. lbs.).

(3) Install the window regulator onto the door. (Refer to 23 - BODY/DOOR - FRONT/WINDOW REGULATOR - INSTALLATION) or(Refer to 23 - BODY/DOORS - REAR/WINDOW REGULATOR - INSTALLATION) for the procedures.

(4) Reconnect the battery negative cable.

RESTRAINTS

TABLE OF CONTENTS

page

RESTRAINTS
DESCRIPTION 1
OPERATION 2
WARNING 3
DIAGNOSIS AND TESTING AIRBAG SYSTEM 3
STANDARD PROCEDURE
HANDLING NON-DEPLOYED AIRBAGS 4
SERVICE AFTER AN AIRBAG DEPLOYMENT 4
VERIFICATION TEST 5
SPECIAL TOOLS 6
AIRBAG CONTROL MODULE
DESCRIPTION 6
OPERATION 6
REMOVAL 7
INSTALLATION 8
CHILD TETHER
REMOVAL 8
INSTALLATION 8
CLOCKSPRING
DESCRIPTION 9
OPERATION 9
STANDARD PROCEDURE CLOCKSPRING CENTERING 10
REMOVAL 10
INSTALLATION 12
DRIVER AIRBAG
DESCRIPTION 13
OPERATION 14
REMOVAL 14
DISASSEMBLY 15
ASSEMBLY 16
INSTALLATION 17
FRONT SEAT BELT & RETRACTOR
REMOVAL 18
INSTALLATION 19
FRONT SEAT BELT BUCKLE
REMOVAL 19
INSTALLATION 20
PASSENGER AIRBAG
DESCRIPTION 20
OPERATION 20
REMOVAL 21
INSTALLATION 21
REAR SEAT BELT & RETRACTOR
REMOVAL 22
INSTALLATION 23
REAR SEAT BELT BUCKLE
REMOVAL 24
INSTALLATION 24
SEAT BELT SWITCH
DESCRIPTION 25
OPERATION 25
DIAGNOSIS AND TESTING SEAT BELT SWITCH 25
SEAT BELT TURNING LOOP ADJUSTER
REMOVAL 26
INSTALLATION 27
TURNING LOOP HEIGHT ADJUSTER KNOB
REMOVAL 27
INSTALLATION 28

RESTRAINTS

DESCRIPTION

A dual front airbag system is standard factory-installed safety equipment on this model. The airbag system is a passive, inflatable, Supplemental Restraint System (SRS) and vehicles with this equipment can be readily identified by the “SRS - AIRBAG” logo molded into the driver airbag trim cover in the center of the steering wheel and also into the passenger airbag door area of the instrument panel top pad above the glove box (Fig. 1). Vehicles with the airbag system can also be identified by the airbag indicator lamp, which will illuminate in the instrument cluster for about seven seconds as a bulb test each time the ignition switch is turned to the On position.

The dual front airbag system consists of the following major components, which are described in further detail elsewhere in this service manual:

- **Airbag Control Module** - The Airbag Control Module (ACM) is located on a mount on the floor panel transmission tunnel, under the center floor console.
- **Airbag Indicator** - The airbag indicator lamp is integral to the ElectroMechanical Instrument Cluster (EMIC), which is located on the instrument panel in front of the driver.
- **Clockspring** - The clockspring is located near the top of the steering column, directly beneath the steering wheel.

RESTRAINTS (Continued)

8098029e

Fig. 1 SRS Logo

- **Driver Airbag** - The driver airbag is located in the center of the steering wheel, beneath the driver airbag trim cover.
- **Driver Knee Blocker** - The driver knee blocker is a molded plastic structural unit secured to the back side of and integral to the instrument panel steering column opening cover.
- **Passenger Airbag** - The passenger airbag is located on the instrument panel, beneath the instrument panel top pad and above the glove box on the passenger side of the vehicle.
- **Passenger Knee Blocker** - The passenger knee blocker is a structural reinforcement that is integral to and concealed within the glove box door.

The ACM and the EMIC each contain a central processing unit and programming that allow them to communicate with each other using the Programmable Communications Interface (PCI) data bus network. This method of communication is used for control of the airbag indicator lamp on all models. (Refer to 8 - ELECTRICAL/ELECTRONIC CONTROL MODULES/COMMUNICATION - DESCRIPTION).

Hard wired circuitry connects the airbag system components to each other through the electrical system of the vehicle. These hard wired circuits are integral to several wire harnesses, which are routed throughout the vehicle and retained by many different methods. These circuits may be connected to each other, to the vehicle electrical system, and to the airbag system components through the use of a combination of soldered splices, splice block connectors, and many different types of wire harness terminal connectors and insulators. Refer to the appropriate wiring information. The wiring information includes wiring diagrams, proper wire and connector repair procedures, further details on wire harness routing and retention, as well as pin-out and location views for the various wire harness connectors, splices and grounds.

OPERATION

The airbag system is referred to as a supplemental restraint system because it was designed and is intended to enhance the protection for the front seat occupants of the vehicle **only** when used in conjunction with the seat belts. It is referred to as a passive system because the vehicle occupants are not required to do anything to make it work. The primary passenger restraints in this or any other vehicle are the standard equipment factory-installed seat belts. Seat belts are referred to as an active restraint because the vehicle occupants are required to physically fasten and properly adjust these restraints in order to benefit from them. The vehicle occupants must be wearing their seat belts in order to obtain the maximum safety benefit from the factory-installed airbag system.

The airbag system electrical circuits are continuously monitored and controlled by a microprocessor and software contained within the Airbag Control Module (ACM). An airbag indicator lamp in the ElectroMechanical Instrument Cluster (EMIC) lights for about seven seconds as a bulb test, each time the ignition switch is turned to the On or Start positions. Following the bulb test, the airbag indicator lamp is turned on or off by the ACM to indicate the status of the airbag system. If the airbag indicator lamp comes on at any time other than during the bulb test, it indicates that there is a problem in the airbag system electrical circuits. Such a problem may cause the airbags not to deploy when required, or to deploy when not required.

Deployment of the airbags depends upon the angle and severity of the impact. The airbag system is designed to deploy upon a frontal impact within a thirty degree angle from either side of the vehicle center line. Deployment is not based upon vehicle speed; rather, deployment is based upon the rate of deceleration as measured by the forces of gravity (G force) upon the airbag system impact sensor, which is integral to the ACM. When a frontal impact is severe enough, the microprocessor in the ACM signals the inflator units of both airbag modules to deploy the airbags. The clockspring on the top of the steering column allows a continuous electrical circuit to be maintained between the stationary steering column and the driver airbag inflator, which rotates with the steering wheel. During a frontal vehicle impact, the knee blockers work in concert with properly fastened and adjusted seat belts to restrain both the driver and the front seat passenger in the proper position for an airbag deployment. The knee blockers also absorb and distribute the crash energy from the driver and the front seat passenger to the structure of the instrument panel.

RESTRAINTS (Continued)

Typically, the driver and front seat passenger recall more about the events preceding and following a collision than they have of the airbag deployment itself. This is because the airbag deployment and deflation occur so rapidly. In a typical 48 kilometer-per-hour (30 mile-per-hour) barrier impact, from the moment of impact until both airbags are fully inflated takes about 40 milliseconds. Within one to two seconds from the moment of impact, both airbags are almost entirely deflated. The times cited for these events are approximations, which apply only to a barrier impact at the given speed. Actual times will vary somewhat, depending upon the vehicle speed, impact angle, severity of the impact, and the type of collision.

When the ACM monitors a problem in any of the airbag system circuits or components, it stores a fault code or Diagnostic Trouble Code (DTC) in its memory circuit and sends an electronic message to the EMIC to turn on the airbag indicator lamp. Proper testing of the airbag system components, the PCI data bus, the data bus message inputs to and outputs from the EMIC or the ACM, as well as the retrieval or erasure of a DTC from the ACM requires the use of a DRBIII® scan tool. Refer to the appropriate diagnostic information.

See the owner's manual in the vehicle glove box for more information on the features, use and operation of all of the factory-installed passenger restraints, including the airbag system.

WARNING - AIRBAG SYSTEM

WARNING:: THE AIRBAG SYSTEM IS A SENSITIVE, COMPLEX ELECTROMECHANICAL UNIT. BEFORE ATTEMPTING TO DIAGNOSE OR SERVICE ANY AIRBAG SYSTEM OR RELATED STEERING WHEEL, STEERING COLUMN, OR INSTRUMENT PANEL COMPONENTS YOU MUST FIRST DISCONNECT AND ISOLATE THE BATTERY NEGATIVE (GROUND) CABLE. THEN WAIT TWO MINUTES FOR THE SYSTEM CAPACITOR TO DISCHARGE BEFORE FURTHER SYSTEM SERVICE. THIS IS THE ONLY SURE WAY TO DISABLE THE AIRBAG SYSTEM. FAILURE TO DO THIS COULD RESULT IN ACCIDENTAL AIRBAG DEPLOYMENT AND POSSIBLE PERSONAL INJURY.

WARNING: THE DRIVER AIRBAG INFLATOR UNIT CONTAINS SODIUM AZIDE AND POTASSIUM NITRATE. THESE MATERIALS ARE POISONOUS AND EXTREMELY FLAMMABLE. CONTACT WITH ACID, WATER, OR HEAVY METALS MAY PRODUCE HARMFUL AND IRRITATING GASES (SODIUM HYDROXIDE IS FORMED IN THE PRESENCE OF MOISTURE) OR COMBUSTIBLE COMPOUNDS. THE PASSENGER AIRBAG UNIT CONTAINS ARGON GAS PRESSURIZED TO OVER 2500 PSI. DO NOT ATTEMPT TO DISMANTLE AN AIRBAG UNIT OR TAMPER WITH ITS INFLATOR. DO NOT PUNCTURE, INCINERATE, OR BRING INTO CONTACT WITH ELECTRICITY. DO NOT STORE AT TEMPERATURES EXCEEDING 93° C (200° F).

WARNING: REPLACE AIRBAG SYSTEM COMPONENTS ONLY WITH PARTS SPECIFIED IN THE DAIMLERCHRYSLER MOPAR PARTS CATALOG. SUBSTITUTE PARTS MAY APPEAR INTERCHANGEABLE, BUT INTERNAL DIFFERENCES MAY RESULT IN INFERIOR OCCUPANT PROTECTION.

WARNING: THE FASTENERS, SCREWS, AND BOLTS ORIGINALLY USED FOR THE AIRBAG SYSTEM COMPONENTS HAVE SPECIAL COATINGS AND ARE SPECIFICALLY DESIGNED FOR THE AIRBAG SYSTEM. THEY MUST NEVER BE REPLACED WITH ANY SUBSTITUTES. ANY TIME A NEW FASTENER IS NEEDED, REPLACE IT WITH THE CORRECT FASTENERS PROVIDED IN THE SERVICE PACKAGE OR SPECIFIED IN THE DAIMLERCHRYSLER MOPAR PARTS CATALOG.

WARNING: WHEN A STEERING COLUMN HAS AN AIRBAG UNIT ATTACHED, NEVER PLACE THE COLUMN ON THE FLOOR OR ANY OTHER SURFACE WITH THE STEERING WHEEL OR AIRBAG UNIT FACE DOWN.

DIAGNOSIS AND TESTING - AIRBAG SYSTEM

Proper diagnosis and testing of the airbag system components, the PCI data bus, the data bus message inputs to and outputs from the ElectroMechanical Instrument Cluster (EMIC) or the Airbag Control Module (ACM), as well as the retrieval or erasure of a Diagnostic Trouble Code (DTC) from the ACM requires the use of a DRBIII® scan tool. Refer to the appropriate diagnostic information.

RESTRAINTS (Continued)

WARNING: ON VEHICLES EQUIPPED WITH AIRBAGS, DISABLE THE AIRBAG SYSTEM BEFORE ATTEMPTING ANY STEERING WHEEL, STEERING COLUMN, OR INSTRUMENT PANEL COMPONENT DIAGNOSIS OR SERVICE. DISCONNECT AND ISOLATE THE BATTERY NEGATIVE (GROUND) CABLE, THEN WAIT TWO MINUTES FOR THE AIRBAG SYSTEM CAPACITOR TO DISCHARGE BEFORE PERFORMING FURTHER DIAGNOSIS OR SERVICE. THIS IS THE ONLY SURE WAY TO DISABLE THE AIRBAG SYSTEM. FAILURE TO TAKE THE PROPER PRECAUTIONS COULD RESULT IN ACCIDENTAL AIRBAG DEPLOYMENT AND POSSIBLE PERSONAL INJURY.

STANDARD PROCEDURE - HANDLING OF NON-DEPLOYED AIRBAGS

At no time should any source of electricity be permitted near the inflator on the back of a non-deployed airbag. When carrying a non-deployed airbag, the trim cover or airbag cushion side of the unit should be pointed away from the body to minimize injury in the event of an accidental deployment. If the airbag unit is placed on a bench or any other surface, the trim cover or airbag cushion side of the unit should be face up to minimize movement in the event of an accidental deployment. In addition, the airbag system should be disarmed whenever any steering wheel, steering column, or instrument panel components require diagnosis or service. Failure to observe this warning could result in accidental airbag deployment and possible personal injury.

All damaged or faulty and non-deployed driver or passenger airbags which are replaced on vehicles are to be returned. If an airbag unit is faulty or damaged and non-deployed, refer to the parts return list in the current DaimlerChrysler Corporation Warranty Policies and Procedures manual for the proper handling and disposal procedures.

AIRBAG STORAGE

An airbag must be stored in its original, special container until it is used for service. Also, it must be stored in a clean, dry environment; away from sources of extreme heat, sparks, and high electrical energy. Always place or store any airbag on a surface with its trim cover or airbag cushion side facing up, to minimize movement in case of an accidental deployment.

STANDARD PROCEDURE - SERVICE AFTER AN AIRBAG DEPLOYMENT

Any vehicle which is to be returned to use following an airbag deployment, must have both airbags, the driver airbag trim cover, the horn switch, the clockspring, and the instrument panel top pad replaced. These components are not intended for reuse and will be damaged or weakened as a result of an airbag deployment, which may or may not be obvious during a visual inspection. Other vehicle components should be closely inspected, but are to be replaced only as required by the extent of the visible damage incurred.

CLEANUP PROCEDURE

Following an airbag deployment, the vehicle interior will contain a powdery residue. This residue consists primarily of harmless particulate by-products of the small pyrotechnic charge used to initiate the propellant used to deploy the airbags. However, this residue may also contain traces of sodium hydroxide powder, a chemical by-product of the propellant material that is used to generate the nitrogen gas that inflates the airbag. Since sodium hydroxide powder can irritate the skin, eyes, nose, or throat, be sure to wear safety glasses, rubber gloves, and a long-sleeved shirt during cleanup (Fig. 2).

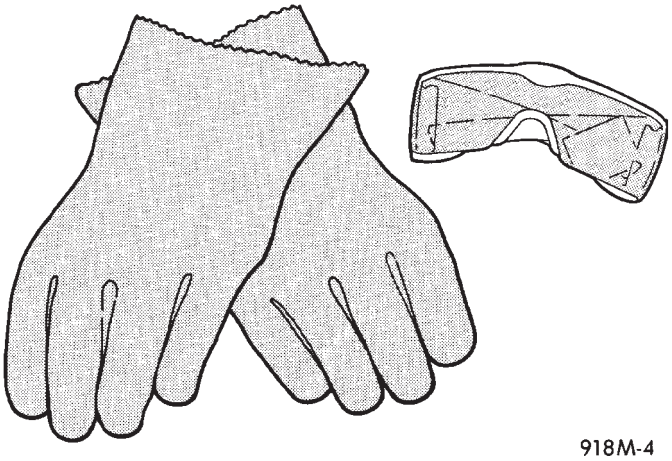

Fig. 2 Wear Safety Glasses and Rubber Gloves - Typical

WARNING: IF YOU EXPERIENCE SKIN IRRITATION DURING CLEANUP, RUN COOL WATER OVER THE AFFECTED AREA. ALSO, IF YOU EXPERIENCE IRRITATION OF THE NOSE OR THROAT, EXIT THE VEHICLE FOR FRESH AIR UNTIL THE IRRITATION CEASES. IF IRRITATION CONTINUES, SEE A PHYSICIAN.

Begin the cleanup by removing both airbags from the vehicle. Refer to the appropriate service removal procedures. Place the deployed airbags in your vehicular scrap pile.

Next, use a vacuum cleaner to remove any residual powder from the vehicle interior. Clean from outside the vehicle and work your way inside, so that you avoid kneeling or sitting on a non-cleaned area. Be

RESTRAINTS (Continued)

certain to vacuum the heater and air conditioning outlets as well (Fig. 3). Run the heater and air conditioner blower on the lowest speed setting and vacuum any powder expelled from the outlets. You may need to vacuum the interior of the vehicle a second time to recover all of the powder.

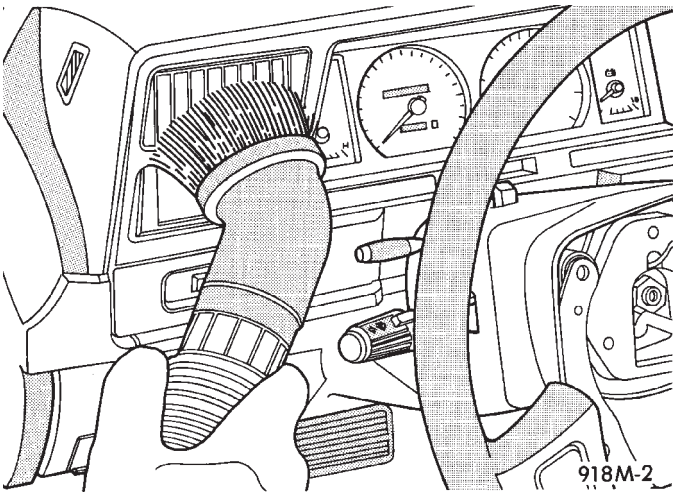

Fig. 3 Vacuum Heater and A/C Outlets - Typical

STANDARD PROCEDURE - VERIFICATION TEST

The following procedure should be performed using a DRBIII® scan tool to verify proper airbag system operation following the service or replacement of any airbag system component.

WARNING: ON VEHICLES EQUIPPED WITH AIRBAGS, DISABLE THE AIRBAG SYSTEM BEFORE ATTEMPTING ANY STEERING WHEEL, STEERING COLUMN, OR INSTRUMENT PANEL COMPONENT DIAGNOSIS OR SERVICE. DISCONNECT AND ISOLATE THE BATTERY NEGATIVE (GROUND) CABLE, THEN WAIT TWO MINUTES FOR THE AIRBAG SYSTEM CAPACITOR TO DISCHARGE BEFORE PERFORMING FURTHER DIAGNOSIS OR SERVICE. THIS IS THE ONLY SURE WAY TO DISABLE THE AIRBAG SYSTEM. FAILURE TO TAKE THE PROPER PRECAUTIONS COULD RESULT IN ACCIDENTAL AIRBAG DEPLOYMENT AND POSSIBLE PERSONAL INJURY.

(1) The battery negative cable remains disconnected and isolated from the airbag component removal and installation procedures.

(2) Be certain that the DRBIII® scan tool contains the latest version of the proper DRBIII® software. Connect the DRBIII® to the 16-way Data Link Connector (DLC). The DLC is located on the driver side lower edge of the instrument panel, outboard of the steering column (Fig. 4).

(3) Turn the ignition switch to the On position and exit the vehicle with the DRBIII®.

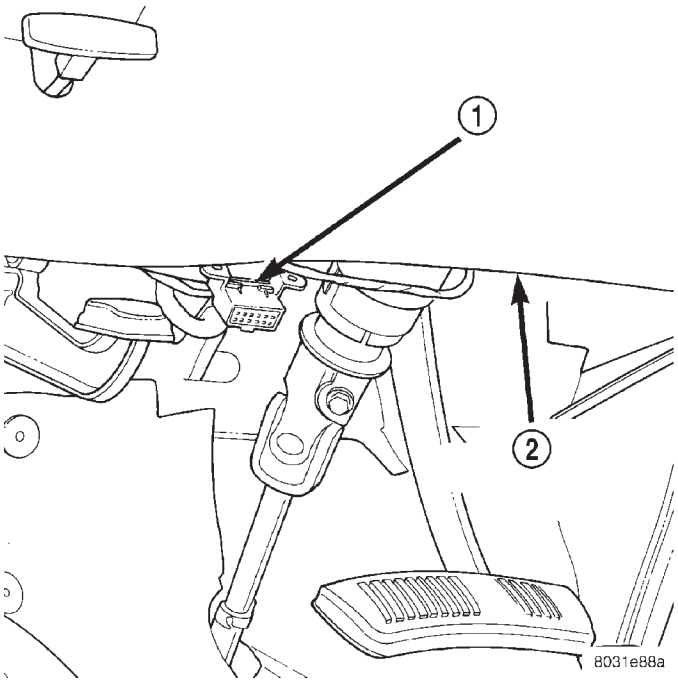

Fig. 4 16-Way Data Link Connector - Typical

1 - 16–WAY DATA LINK CONNECTOR
2 - BOTTOM OF INSTRUMENT PANEL

(4) Check to be certain that nobody is in the vehicle, then reconnect the battery negative cable.

(5) Using the DRBIII®, read and record the active (current) Diagnostic Trouble Code (DTC) data.

(6) Next, use the DRBIII® to read and record any stored (historical) DTC data.

(7) If any DTC is found in Step 5 or Step 6, refer to the appropriate diagnostic information.

(8) Use the DRBIII® to erase the stored DTC data. If any problems remain, the stored DTC data will not erase. Refer to the appropriate diagnostic information to diagnose any stored DTC that will not erase. If the stored DTC information is successfully erased, go to Step 9.

(9) Turn the ignition switch to the Off position for about fifteen seconds, and then back to the On position. Observe the airbag indicator in the instrument cluster. It should light for six to eight seconds, and then go out. This indicates that the airbag system is functioning normally and that the repairs are complete. If the airbag indicator fails to light, or lights and stays on, there is still an active airbag system fault or malfunction. Refer to the appropriate diagnostic information to diagnose the problem.

SPECIAL TOOLS

SPECIAL TOOLS - AIRBAG SYSTEM

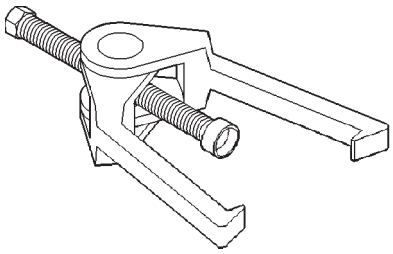

Puller C-3894-A

AIRBAG CONTROL MODULE

DESCRIPTION

The Airbag Control Module (ACM) is concealed underneath the center floor console, just forward of the park brake mechanism in the passenger compartment of the vehicle. The ACM is secured with screws to a mount that is welded onto the floor panel transmission tunnel. The ACM contains an electronic microprocessor, an electronic impact sensor, an electromechanical safing sensor, and an energy storage capacitor. The ACM is connected to the vehicle electrical system through a take out and connector of the instrument panel floor wire harness, which is routed to the ACM along the left side of the floor panel transmission tunnel under the center floor console.

The ACM cannot be repaired or adjusted and, if damaged or faulty, it must be replaced.

OPERATION

The microprocessor in the ACM contains the airbag system logic circuits, and it monitors and controls all of the airbag system components. The ACM also uses On-Board Diagnostics (OBD) and can communicate with other electronic modules in the vehicle as well as with the DRBIII® scan tool using the Programmable Communication Interface (PCI) data bus network. This method of communication is used for control of the airbag indicator lamp in the ElectroMechanical Instrument Cluster (EMIC) and for airbag system diagnosis and testing through the 16-way data link connector located on the lower left edge of the instrument panel. (Refer to 8 - ELECTRICAL/ELECTRONIC CONTROL MODULES/COMMUNICATION - OPERATION). The ACM microprocessor continuously monitors all of the airbag system electrical circuits to determine the system readiness. If the ACM detects a monitored system fault, it sets an active Diagnostic Trouble Code (DTC) and sends messages to the EMIC over the PCI data bus to turn on the airbag indicator lamp. (Refer to 8 - ELECTRICAL/INSTRUMENT CLUSTER/AIRBAG INDICATOR - OPERATION). If the airbag system fault is still present when the ignition switch is turned to the Off position, the DTC is stored in memory by the ACM. However, if a fault does not recur for a number of ignition cycles, the ACM will automatically erase the stored DTC.

The ACM receives battery current through two circuits, on a fused ignition switch output (run) circuit through a fuse in the Junction Block (JB), and on a fused ignition switch output (start-run) circuit through a second fuse in the JB. The ACM is grounded through a ground circuit and take out of the instrument panel floor wire harness. This take out has a single eyelet terminal connector secured by a nut to a ground stud located on the rear of the ACM mount on the floor panel transmission tunnel. Therefore, the ACM is operational whenever the ignition switch is in the Start or On positions. The ACM also contains an energy-storage capacitor. When the ignition switch is in the Start or On positions, this capacitor is continually being charged with enough electrical energy to deploy the airbags for up to one second following a battery disconnect or failure. The purpose of the capacitor is to provide backup airbag system protection in case there is a loss of battery current supply to the ACM during an impact. The capacitor is only serviced as a unit with the ACM.

Two sensors are contained within the ACM, an electronic impact sensor and a safing sensor. The electronic impact sensor is an accelerometer that senses the rate of vehicle deceleration, which provides verification of the direction and severity of an impact. A pre-programmed decision algorithm in the ACM microprocessor determines when the deceleration rate as signaled by the impact sensor indicates an impact that is severe enough to require airbag system protection. When the programmed conditions are met, the ACM sends an electrical signal to deploy the airbags. The safing sensor is an electromechanical sensor within the ACM that is connected in series between the ACM microprocessor airbag deployment circuit and the airbags. The safing sensor is a normally open switch that is used to verify or confirm the need for an airbag deployment by detecting impact energy of a lesser magnitude than that of the electronic impact sensor, and must be closed in order for the airbags to deploy. The impact sensor and safing sensor are calibrated for the specific vehicle, and are only serviced as a unit with the ACM.

AIRBAG CONTROL MODULE (Continued)

REMOVAL

WARNING: DISABLE THE AIRBAG SYSTEM BEFORE ATTEMPTING ANY STEERING WHEEL, STEERING COLUMN, OR INSTRUMENT PANEL COMPONENT DIAGNOSIS OR SERVICE. DISCONNECT AND ISOLATE THE BATTERY NEGATIVE (GROUND) CABLE, THEN WAIT TWO MINUTES FOR THE AIRBAG SYSTEM CAPACITOR TO DISCHARGE BEFORE PERFORMING FURTHER DIAGNOSIS OR SERVICE. THIS IS THE ONLY SURE WAY TO DISABLE THE AIRBAG SYSTEM. FAILURE TO TAKE THE PROPER PRECAUTIONS COULD RESULT IN ACCIDENTAL AIRBAG DEPLOYMENT AND POSSIBLE PERSONAL INJURY.

WARNING: THE AIRBAG CONTROL MODULE CONTAINS THE IMPACT SENSOR, WHICH ENABLES THE SYSTEM TO DEPLOY THE AIRBAGS. NEVER STRIKE OR KICK THE AIRBAG CONTROL MODULE, AS IT CAN DAMAGE THE IMPACT SENSOR OR AFFECT ITS CALIBRATION. IF AN AIRBAG CONTROL MODULE IS ACCIDENTALLY DROPPED DURING SERVICE, THE MODULE MUST BE SCRAPPED AND REPLACED WITH A NEW UNIT. FAILURE TO OBSERVE THIS WARNING COULD RESULT IN ACCIDENTAL, INCOMPLETE, OR IMPROPER AIRBAG DEPLOYMENT AND POSSIBLE OCCUPANT INJURIES.

(1) Disconnect and isolate the battery negative cable. If either of the airbags has not been deployed, wait two minutes for the system capacitor to discharge before further service.

(2) Remove the center floor console from the floor panel transmission tunnel. (Refer to 23 - BODY/INTERIOR/FLOOR CONSOLE - REMOVAL).

(3) Remove the nut that secures the center console bracket to the stud on the floor panel transmission tunnel in front of the Airbag Control Module (ACM) (Fig. 5).

(4) Remove the center console bracket from the stud on the floor panel transmission tunnel.

(5) Disconnect the instrument panel wire harness connector for the ACM from the ACM connector receptacle (Fig. 6). To disconnect the instrument panel wire harness connector from the ACM:

(a) Slide the red Connector Position Assurance (CPA) lock on the top of the connector toward the left side of the vehicle.

(b) Depress the connector latch tab and pull the connector straight away from the ACM connector receptacle.

(6) Remove the four screws that secure the ACM to the mount that is welded onto the floor panel transmission tunnel (Fig. 7).

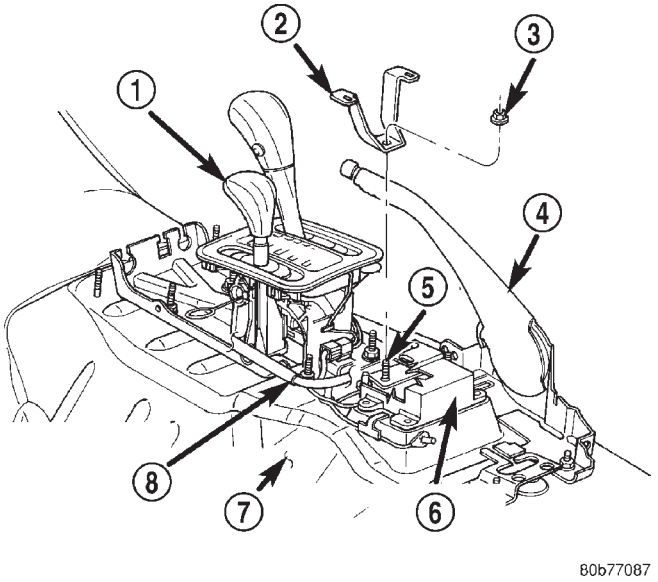

Fig. 5 Center Console Bracket Remove/Install

1 - SHIFTER ASSEMBLY
2 - CENTER CONSOLE BRACKET
3 - NUT
4 - PARK BRAKE
5 - STUD
6 - AIRBAG CONTROL MODULE
7 - FLOOR PANEL TRANSMISSION TUNNEL
8 - INSTRUMENT PANEL WIRE HARNESS

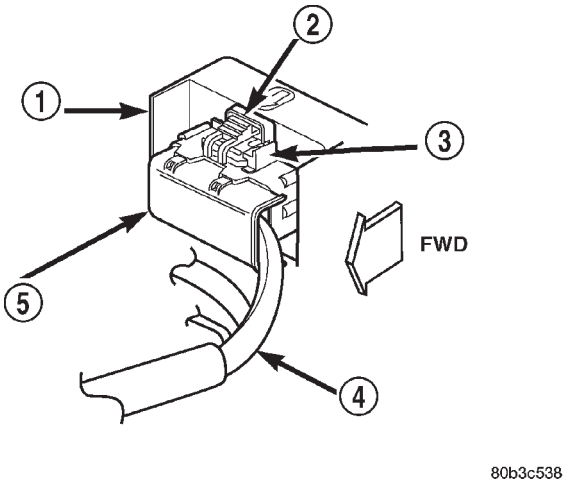

Fig. 6 Airbag Control Module Connector

1 - AIRBAG CONTROL MODULE
2 - LATCH TAB
3 - CPA LOCK
4 - INSTRUMENT PANEL WIRE HARNESS
5 - CONNECTOR

(7) Remove the ACM from the ACM mount on the floor panel transmission tunnel.

AIRBAG CONTROL MODULE (Continued)

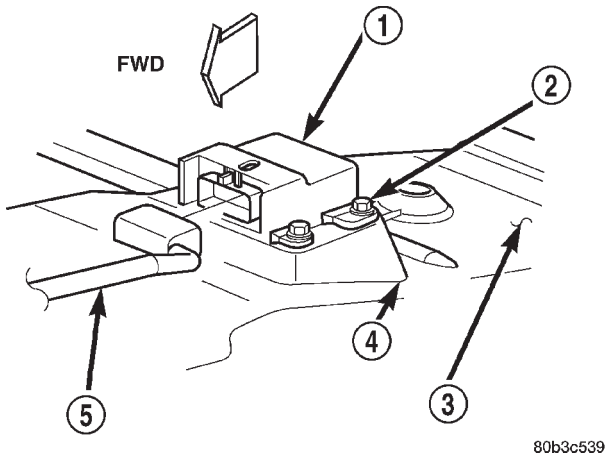

Fig. 7 Airbag Control Module Remove/Install

1 - AIRBAG CONTROL MODULE
2 - SCREW (4)
3 - FLOOR PANEL TRANSMISSION TUNNEL
4 - MOUNT
5 - INSTRUMENT PANEL WIRE HARNESS

INSTALLATION

WARNING: DISABLE THE AIRBAG SYSTEM BEFORE ATTEMPTING ANY STEERING WHEEL, STEERING COLUMN, OR INSTRUMENT PANEL COMPONENT DIAGNOSIS OR SERVICE. DISCONNECT AND ISOLATE THE BATTERY NEGATIVE (GROUND) CABLE, THEN WAIT TWO MINUTES FOR THE AIRBAG SYSTEM CAPACITOR TO DISCHARGE BEFORE PERFORMING FURTHER DIAGNOSIS OR SERVICE. THIS IS THE ONLY SURE WAY TO DISABLE THE AIRBAG SYSTEM. FAILURE TO TAKE THE PROPER PRECAUTIONS COULD RESULT IN ACCIDENTAL AIRBAG DEPLOYMENT AND POSSIBLE PERSONAL INJURY.

WARNING: THE AIRBAG CONTROL MODULE CONTAINS THE IMPACT SENSOR, WHICH ENABLES THE SYSTEM TO DEPLOY THE AIRBAGS. NEVER STRIKE OR KICK THE AIRBAG CONTROL MODULE, AS IT CAN DAMAGE THE IMPACT SENSOR OR AFFECT ITS CALIBRATION. IF AN AIRBAG CONTROL MODULE IS ACCIDENTALLY DROPPED DURING SERVICE, THE MODULE MUST BE SCRAPPED AND REPLACED WITH A NEW UNIT. FAILURE TO OBSERVE THIS WARNING COULD RESULT IN ACCIDENTAL, INCOMPLETE, OR IMPROPER AIRBAG DEPLOYMENT AND POSSIBLE OCCUPANT INJURIES.

(1) Carefully position the ACM to the mount that is welded onto the floor panel transmission tunnel (Fig. 7). The bottom of the ACM housing is keyed. When the ACM is correctly positioned, the bottom of the housing will fit flush with the mount and the arrow on the top of the housing will be pointed forward in the vehicle.

(2) Install and tighten the four screws that secure the ACM to the mount that is welded onto the floor panel transmission tunnel. Tighten the screws to 7.9 N·m (70 in. lbs.).

(3) Reconnect the instrument panel wire harness connector for the ACM to the ACM connector receptacle. Be certain that the connector latch and the red CPA lock are fully engaged (Fig. 6).

(4) Reinstall the center console bracket onto the stud on the floor panel transmission tunnel in front of the ACM.

(5) Install and tighten the nut that secures the center console bracket to the stud on the floor panel transmission tunnel. Tighten the nut to 28.2 N·m (250 in. lbs.).

(6) Reinstall the center floor console onto the floor panel transmission tunnel. (Refer to 23 - BODY/INTERIOR/FLOOR CONSOLE - INSTALLATION).

(7) Do not reconnect the battery negative cable at this time. The airbag system verification test procedure should be performed following service of any airbag system component. (Refer to 8 - ELECTRICAL/RESTRAINTS - STANDARD PROCEDURE - VERIFICATION TEST).

CHILD TETHER

REMOVAL

(1) Remove the cover from the child tether anchor bezel in the headliner near the liftgate opening header.

(2) Remove the screw that secures the child tether anchor bracket to the inner liftgate opening header (Fig. 8).

(3) Remove the child tether anchor bracket from the inner liftgate opening header.

INSTALLATION

(1) Position the child tether anchor bracket onto the inner liftgate opening header (Fig. 8).

(2) Install and tighten the screw that secures the child tether anchor bracket to the inner liftgate opening header. Tighten the screw to 11.8 N·m (105 in. lbs.).

(3) Reinstall the cover into the child tether anchor bezel in the headliner near the liftgate opening header.

CHILD TETHER (Continued)

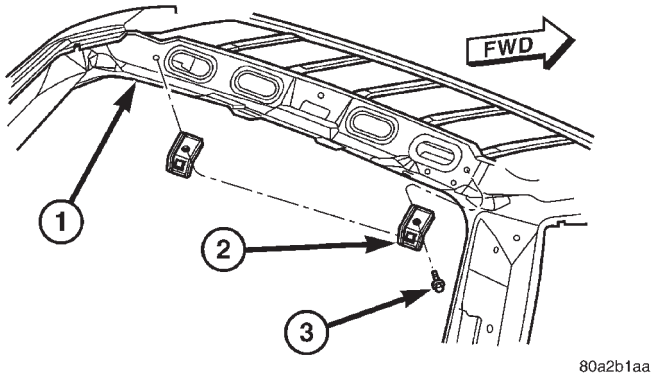

Fig. 8 Child Tether Anchor Remove/Install

1 - INNER LIFTGATE OPENING HEADER
2 - CHILD TETHER ANCHOR BRACKET
3 - SCREW

CLOCKSPRING

DESCRIPTION

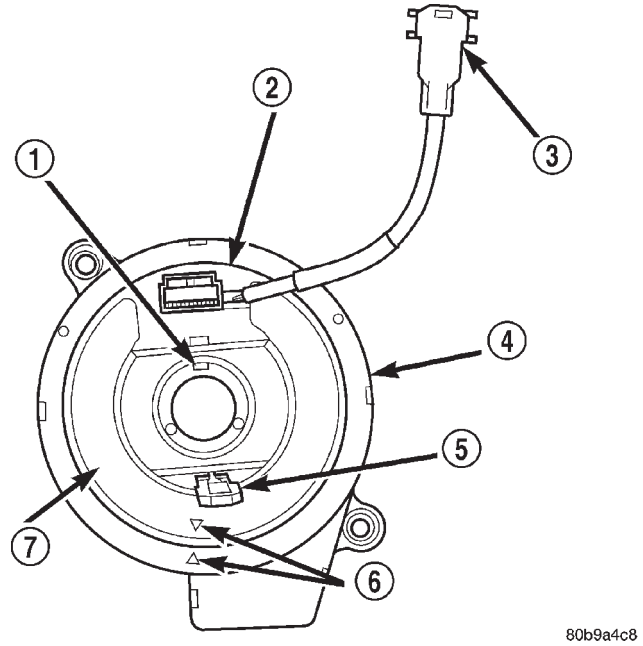

Fig. 9 Clockspring

1 - OBLONG HUB PIN
2 - CLOCKSPRING HUB
3 - UPPER CLOCKSPRING WIRE HARNESS AIRBAG CONNECTOR
4 - CLOCKSPRING CASE
5 - LOCKING PIN
6 - ALIGNMENT ARROWS
7 - LABEL

The clockspring assembly is secured with two screws to the multi-function switch mounting housing near the top of the steering column, behind the steering wheel (Fig. 9). The clockspring consists of a flat, round molded plastic case with a stubby tail that hangs below the steering column and contains two connector receptacles that face toward the instrument panel. Within the plastic housing is a spool-like molded plastic rotor with a large exposed hub. The upper surface of the rotor hub has a large center hole, two large flats, an index hole, and a wire harness receptacle that faces toward the steering wheel. The lower surface of the rotor hub has three pins, two round pins and one oblong pin. Within the plastic case and wound around the rotor spool is a long ribbon-like tape that consists of several thin copper wire leads sandwiched between two thin plastic membranes. The outer end of the tape terminates at the connector receptacles on the clockspring case, while the inner end of the tape terminates at the connector receptacle on the hub of the clockspring rotor.

A locking pin secures the centered clockspring rotor to the clockspring case during shipment, but is removed from the index hole and discarded once the clockspring and multi-function switch mounting housing are installed on the steering column. (Refer to 8 - ELECTRICAL/RESTRAINTS/CLOCKSPRING - STANDARD PROCEDURE - CLOCKSPRING CENTERING).

The clockspring cannot be repaired. If the clockspring is faulty, damaged, or if the driver airbag has been deployed, the clockspring must be replaced.

OPERATION

The clockspring is a mechanical electrical circuit component that is used to provide continuous electrical continuity between the fixed instrument panel wire harness and the electrical components mounted on or in the rotating steering wheel. On this model the rotating electrical components include the driver airbag, the horn switch, the speed control switches, and the remote radio switches if the vehicle is so equipped. The clockspring case is positioned and secured to the multi-function switch mounting housing on the upper steering column housing by two screws. The two connector receptacles on the tail of the fixed clockspring housing connect the clockspring to the vehicle electrical system through two take outs with connectors from the instrument panel wire harness. The clockspring rotor is movable and is keyed to the hub of the steering wheel by two large flats that are molded into the rotor hub. The three pins, two round and one oblong, on the lower surface of the clockspring rotor hub engage and index the clockspring rotor to the turn signal cancel cam. The turn signal cancel cam is integral to the multi-function switch mounting housing and is keyed to the upper steering column shaft. A short, yellow-jacketed pigtail

CLOCKSPRING (Continued)

harness is included with the clockspring unit and connects the clockspring to the driver airbag. A separate steering wheel wire harness connects the clockspring to the horn switch, the two speed control switches, and the remote radio switches on vehicles that are so equipped.

Like the clockspring in a timepiece, the clockspring tape has travel limits and can be damaged by being wound too tightly during full stop-to-stop steering wheel rotation. To prevent this from occurring, the clockspring must be centered when it is installed on the steering column. Centering the clockspring indexes the clockspring spool to the movable steering components so that the tape can operate within its designed travel limits. However, if the clockspring is removed from the steering column or if the steering shaft is disconnected from the steering gear, the clockspring spool can change position relative to the movable steering components and must be re-centered following completion of the service or the tape may be damaged. Service replacement clocksprings are shipped pre-centered and with a locking pin installed. This locking pin should not be removed until the clockspring has been installed on the steering column. If the locking pin is removed before the clockspring is installed on a steering column, the clockspring centering procedure must be performed. (Refer to 8 - ELECTRICAL/RESTRAINTS/CLOCKSPRING - STANDARD PROCEDURE - CLOCKSPRING CENTERING).

STANDARD PROCEDURE - CLOCKSPRING CENTERING

The clockspring is designed to wind and unwind when the steering wheel is rotated, but is only designed to rotate the same number of turns (about five complete rotations) as the steering wheel can be turned from stop to stop. Centering the clockspring indexes the clockspring tape to other steering components so that it can operate within its designed travel limits. The rotor of a centered clockspring can be rotated two and one-half turns in either direction from the centered position, without damaging the clockspring tape.

However, if the clockspring is removed for service or if the steering column is disconnected from the steering gear, the clockspring tape can change position relative to the other steering components. The clockspring must then be re-centered following completion of such service or the clockspring tape may be damaged. Service replacement clocksprings are shipped pre-centered and with a locking pin installed. This locking pin should not be removed until the clockspring has been installed on the steering column. If the locking pin is removed before the clockspring is installed on a steering column, the clockspring centering procedure must be performed.

WARNING: DISABLE THE AIRBAG SYSTEM BEFORE ATTEMPTING ANY STEERING WHEEL, STEERING COLUMN, OR INSTRUMENT PANEL COMPONENT DIAGNOSIS OR SERVICE. DISCONNECT AND ISOLATE THE BATTERY NEGATIVE (GROUND) CABLE, THEN WAIT TWO MINUTES FOR THE AIRBAG SYSTEM CAPACITOR TO DISCHARGE BEFORE PERFORMING FURTHER DIAGNOSIS OR SERVICE. THIS IS THE ONLY SURE WAY TO DISABLE THE AIRBAG SYSTEM. FAILURE TO TAKE THE PROPER PRECAUTIONS COULD RESULT IN ACCIDENTAL AIRBAG DEPLOYMENT AND POSSIBLE PERSONAL INJURY.

NOTE: Before starting this procedure, be certain to turn the steering wheel until the front wheels are in the straight-ahead position.

(1) Place the front wheels in the straight-ahead position.

(2) Remove the clockspring from the steering column. (Refer to 8 - ELECTRICAL/RESTRAINTS/CLOCKSPRING - REMOVAL).

(3) Hold the clockspring case in one hand so that it is oriented as it would be when it is installed on the steering column (Fig. 10).

(4) Use your other hand to rotate the clockspring rotor clockwise to the end of its travel. **Do not apply excessive torque.**

(5) From the end of the clockwise travel, rotate the hub about two and one-half turns counterclockwise, until the arrows on the clockspring hub label and the clockspring case are aligned. The uppermost pin on the lower surface of the clockspring hub should now be the oblong pin.

(6) The clockspring is now centered. Secure the clockspring hub to the clockspring case to maintain clockspring centering until it is reinstalled on the steering column.

(7) The front wheels should still be in the straight-ahead position. Reinstall the clockspring onto the steering column. (Refer to 8 - ELECTRICAL/RESTRAINTS/CLOCKSPRING - INSTALLATION).

REMOVAL

The clockspring cannot be repaired. It must be replaced if faulty or damaged, or if the driver airbag has been deployed.

CLOCKSPRING (Continued)

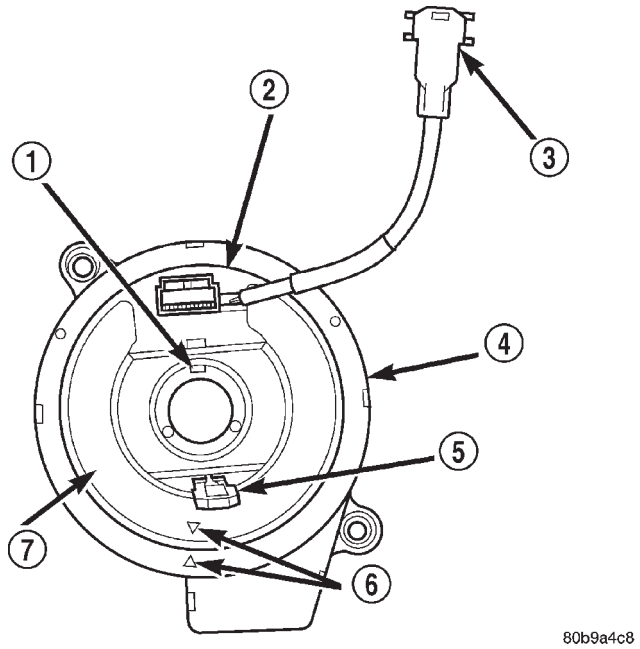

Fig. 10 Clockspring

1 - OBLONG HUB PIN
2 - CLOCKSPRING HUB
3 - UPPER CLOCKSPRING WIRE HARNESS AIRBAG CONNECTOR
4 - CLOCKSPRING CASE
5 - LOCKING PIN
6 - ALIGNMENT ARROWS
7 - LABEL

WARNING: DISABLE THE AIRBAG SYSTEM BEFORE ATTEMPTING ANY STEERING WHEEL, STEERING COLUMN, OR INSTRUMENT PANEL COMPONENT DIAGNOSIS OR SERVICE. DISCONNECT AND ISOLATE THE BATTERY NEGATIVE (GROUND) CABLE, THEN WAIT TWO MINUTES FOR THE AIRBAG SYSTEM CAPACITOR TO DISCHARGE BEFORE PERFORMING FURTHER DIAGNOSIS OR SERVICE. THIS IS THE ONLY SURE WAY TO DISABLE THE AIRBAG SYSTEM. FAILURE TO TAKE THE PROPER PRECAUTIONS COULD RESULT IN ACCIDENTAL AIRBAG DEPLOYMENT AND POSSIBLE PERSONAL INJURY.

NOTE: Before starting this procedure, be certain to turn the steering wheel until the front wheels are in the straight-ahead position.

(1) Place the front wheels in the straight-ahead position.

(2) Remove the driver airbag from the steering wheel. (Refer to 8 - ELECTRICAL/RESTRAINTS/DRIVER AIRBAG - REMOVAL).

(3) Disconnect the steering wheel wire harness connector from the upper clockspring connector receptacle, which is located between the two upper spokes of the armature within the hub cavity of the steering wheel.

(4) Remove the nut that secures the steering wheel armature to the steering column upper shaft, which is located within the hub cavity of the steering wheel.

(5) Pull the steering wheel off of the steering column upper shaft spline using a two-jawed puller (Special Tool C-3894-A) (Fig. 11). When installing the puller onto the steering wheel, be certain that each jaw of the puller is seated in the pocket that is cast into the underside of the steering wheel armature on each side of the hub (Fig. 12). Also, if the clockspring is to be reused, be certain not to damage or deform the clockspring case when positioning the jaws of the puller into the pockets on the underside of the steering wheel armature hub.

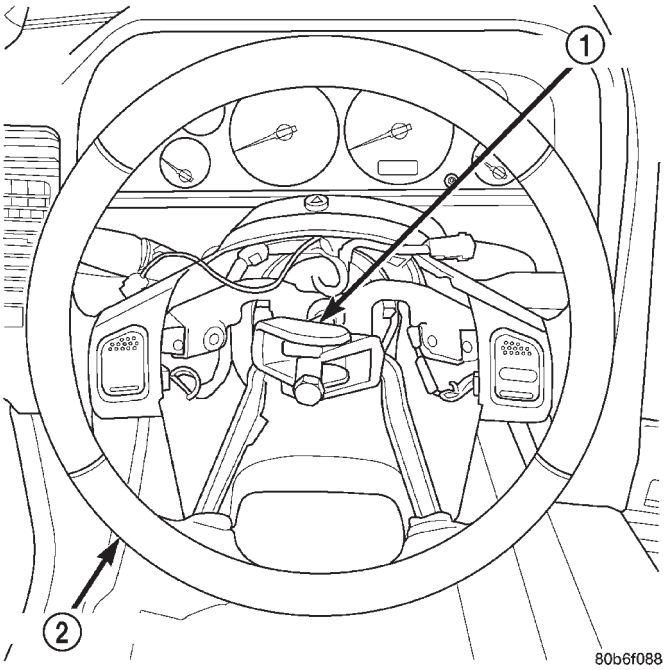

Fig. 11 Steering Wheel Remove/Install

1 - PULLER
2 - STEERING WHEEL

(6) Remove the screw that secures the lower tilting steering column shroud to the steering column multi-function switch mounting housing (Fig. 13).

(7) Unsnap the two halves of the tilting steering column shroud from each other and remove both halves from the steering column.

(8) Disconnect the two instrument panel wire harness connectors from the lower clockspring connector receptacles.

(9) Remove the two screws that secure the clockspring case to the multi-function switch mounting housing (Fig. 14).

CLOCKSPRING (Continued)

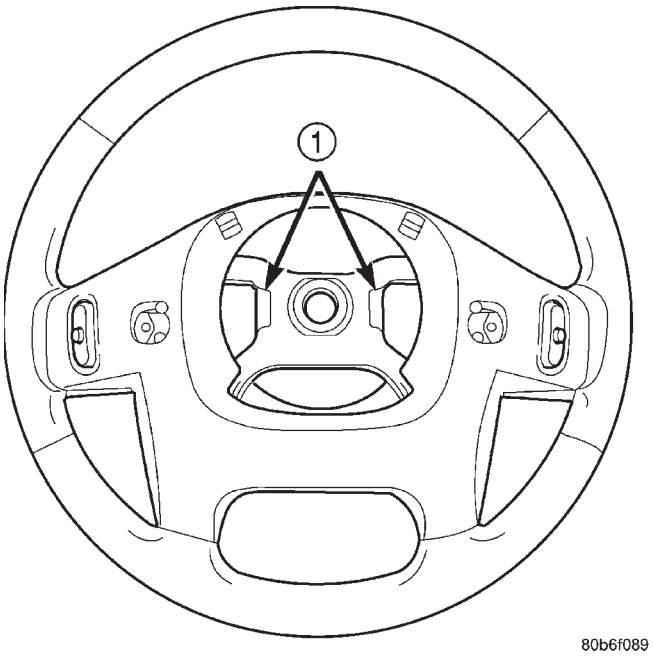

Fig. 12 Steering Wheel Armature Pockets

1 - STEERING WHEEL POCKETS

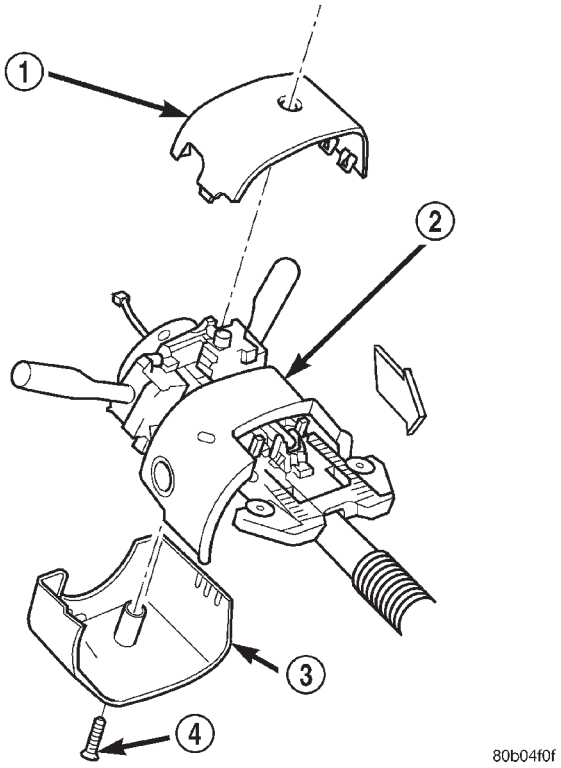

Fig. 13 Steering Column Shrouds Remove/Install

1 - UPPER TILTING COLUMN SHROUD
2 - FIXED COLUMN SHROUD
3 - LOWER TILTING COLUMN SHROUD
4 - SCREW

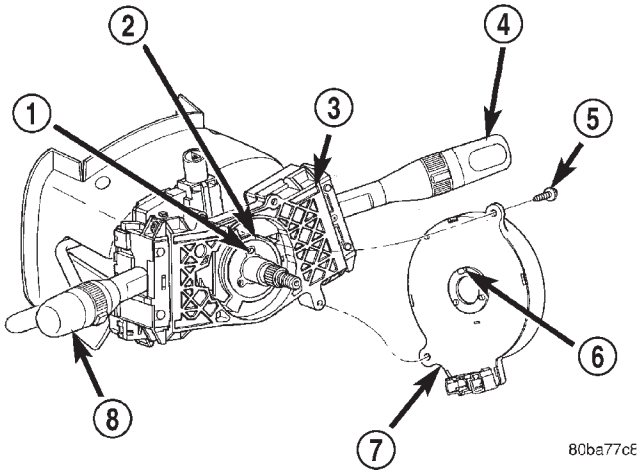

Fig. 14 Clockspring Remove/Install

1 - OBLONG HOLE
2 - TURN SIGNAL CANCEL CAM
3 - MULTI-FUNCTION SWITCH MOUNTING HOUSING
4 - RIGHT MULTI-FUNCTION SWITCH
5 - SCREW (2)
6 - OBLONG PIN
7 - CLOCKSPRING
8 - LEFT MULTI-FUNCTION SWITCH

(10) Remove the clockspring from the steering column. The clockspring cannot be repaired. It must be replaced if faulty or damaged, or if the driver airbag has been deployed.

(11) If the removed clockspring is to be reused, secure the clockspring rotor to the clockspring case to maintain clockspring centering until it is reinstalled on the steering column. If clockspring centering is not maintained, the clockspring must be centered again before it is reinstalled. (Refer to 8 - ELECTRICAL/RESTRAINTS/CLOCKSPRING - STANDARD PROCEDURE - CLOCKSPRING CENTERING).

INSTALLATION

The clockspring cannot be repaired. It must be replaced if faulty or damaged, or if the driver side airbag has been deployed.

If the clockspring is not properly centered in relation to the steering wheel, steering shaft and steering gear, it may be damaged. (Refer to 8 - ELECTRICAL/RESTRAINTS/CLOCKSPRING - STANDARD PROCEDURE - CLOCKSPRING CENTERING). Service replacement clocksprings are shipped pre-centered and with a locking pin installed. This locking pin should not be removed until the clockspring has been installed on the steering column. If the locking pin is removed before the clockspring is installed on a steering column, the clockspring centering procedure must be performed.

CLOCKSPRING (Continued)

WARNING: DISABLE THE AIRBAG SYSTEM BEFORE ATTEMPTING ANY STEERING WHEEL, STEERING COLUMN, OR INSTRUMENT PANEL COMPONENT DIAGNOSIS OR SERVICE. DISCONNECT AND ISOLATE THE BATTERY NEGATIVE (GROUND) CABLE, THEN WAIT TWO MINUTES FOR THE AIRBAG SYSTEM CAPACITOR TO DISCHARGE BEFORE PERFORMING FURTHER DIAGNOSIS OR SERVICE. THIS IS THE ONLY SURE WAY TO DISABLE THE AIRBAG SYSTEM. FAILURE TO TAKE THE PROPER PRECAUTIONS COULD RESULT IN ACCIDENTAL AIRBAG DEPLOYMENT AND POSSIBLE PERSONAL INJURY.

NOTE: Before starting this procedure, be certain that the front wheels are still in the straight-ahead position.

(1) While holding the centered clockspring hub and case stationary in relation to each other, slide the clockspring down over the steering column upper shaft.

(2) Align and seat the three pins on the lower surface of the clockspring rotor hub with the three holes in the hub of the turn signal cancel cam (Fig. 14). It should be noted that when the clockspring is properly centered the uppermost pin on the clockspring rotor hub is the oblong pin, and it will only fit in the oblong hole in the hub of the turn signal cancel cam.

(3) Align and seat the one pin and the two mounting holes on the clockspring case to their respective holes in the multi-function switch mounting housing.

(4) Install and tighten the two clockspring mounting screws. Tighten the screws to 2.5 N·m (22 in. lbs.).

(5) Reconnect the two instrument panel wire harness connectors to the lower clockspring connector receptacles.

(6) Position the lower tilting steering column shroud onto the steering column (Fig. 13).

(7) Install and tighten the screw that secures the lower tilting steering column shroud to the multi-function switch mounting housing. Tighten the screw to 1.9 N·m (17 in. lbs.).

(8) Position the upper tilting column shroud onto the steering column with the hazard warning switch button inserted through the hole in the upper surface of the shroud. Align the upper tilting steering column shroud to the lower shroud and snap the two shroud halves together.

(9) Reinstall the steering wheel on to the steering column upper shaft. Be certain to index the alignment splines in the hub of the steering wheel armature with the splines on the shaft. Pull the upper clockspring wire harness through the hole between the two upper steering wheel armature spokes.

(10) Install and tighten the steering wheel mounting nut. Tighten the nut to 47 N·m (420 in. lbs.). Be certain not to pinch the wire harnesses between the steering wheel and the nut.

(11) Reconnect the steering wheel wire harness connector to the upper clockspring connector receptacle, which is located between the two upper spokes of the armature within the hub cavity of the steering wheel.

(12) Reinstall the driver airbag onto the steering wheel. (Refer to 8 - ELECTRICAL/RESTRAINTS/DRIVER AIRBAG - INSTALLATION).

DRIVER AIRBAG

DESCRIPTION

The driver airbag protective trim cover is the most visible part of the driver airbag. The airbag used in this model is a Next Generation-type that complies with revised federal airbag standards to deploy with less force than those used in some prior models. The driver airbag is located in the center of the steering wheel, where it is secured with two screws to the steering wheel armature. Concealed beneath the driver airbag trim cover are the horn switch, the folded airbag cushion, the airbag retainer or housing, the airbag inflator, and the retainers that secure the trim cover to the airbag housing. The resistive membrane-type horn switch is secured within a plastic tray that is inserted in a pocket or pouch sewn onto the airbag cushion retainer strap, between the trim cover and the folded airbag cushion. The airbag inflator is a conventional pyrotechnic-type unit that is secured with nuts to four studs on the back of the stamped metal airbag housing.

The driver airbag trim cover has locking blocks molded into the back side of it that engage a lip formed around the perimeter of the airbag housing. Two stamped metal retainers then fit over the inflator mounting studs on the back of the airbag housing and are engaged in slots on the inside of the trim cover, securely locking the cover into place. One horn switch pigtail wire has an eyelet terminal connector that is captured on the upper right inflator mounting stud between the inflator and the upper trim cover retainer. The connector insulator of the other horn switch pigtail wire is secured with an integral retainer to a small hole on the left side of the upper trim cover retainer. The driver airbag cannot be repaired, and must be replaced if deployed or in any way damaged. The driver airbag trim cover and the horn switch are available individually, and may be disassembled from the driver airbag for service replacement.

DRIVER AIRBAG (Continued)

OPERATION

The driver airbag is deployed by an electrical signal generated by the Airbag Control Module (ACM) through the driver airbag line 1 and line 2 (or squib) circuits. When the ACM sends the proper electrical signal to the airbag inflator, the electrical energy generates enough heat to initiate a small pyrotechnic charge which, in turn, ignites chemical pellets within the inflator. Once ignited, these chemical pellets burn rapidly and produce a large quantity of nitrogen gas. The inflator is sealed to the back of the airbag housing and a diffuser in the inflator directs all of the nitrogen gas into the airbag cushion, causing the cushion to inflate. As the cushion inflates, the driver airbag trim cover will split at predetermined breakout lines, then fold back out of the way along with the horn switch and tray unit. Following an airbag deployment, the airbag cushion quickly deflates by venting the nitrogen gas towards the instrument panel through the porous fabric material used on the steering wheel side of the airbag cushion.

Some of the chemicals used to create the nitrogen gas are considered hazardous in their solid state, before they are burned, but they are securely sealed within the airbag inflator. However, the nitrogen gas that is produced when the chemicals are burned is harmless. A small amount of residue from the burned chemicals may cause some temporary discomfort if it contacts the skin, eyes, or breathing passages. If skin or eye irritation is noticed, rinse the affected area with plenty of cool, clean water. If breathing passages are irritated, move to another area where there is plenty of clean, fresh air to breath. If the irritation is not alleviated by these actions, contact a physician.

REMOVAL

The following procedure is for replacement of a faulty or damaged driver airbag. If the driver airbag has been deployed, the clockspring must also be replaced. (Refer to 8 - ELECTRICAL/RESTRAINTS/CLOCKSPRING - REMOVAL).

WARNING: DISABLE THE AIRBAG SYSTEM BEFORE ATTEMPTING ANY STEERING WHEEL, STEERING COLUMN, OR INSTRUMENT PANEL COMPONENT DIAGNOSIS OR SERVICE. DISCONNECT AND ISOLATE THE BATTERY NEGATIVE (GROUND) CABLE, THEN WAIT TWO MINUTES FOR THE AIRBAG SYSTEM CAPACITOR TO DISCHARGE BEFORE PERFORMING FURTHER DIAGNOSIS OR SERVICE. THIS IS THE ONLY SURE WAY TO DISABLE THE AIRBAG SYSTEM. FAILURE TO TAKE THE PROPER PRECAUTIONS COULD RESULT IN ACCIDENTAL AIRBAG DEPLOYMENT AND POSSIBLE PERSONAL INJURY.

WARNING: WHEN REMOVING A DEPLOYED AIRBAG, RUBBER GLOVES, EYE PROTECTION, AND A LONG-SLEEVED SHIRT SHOULD BE WORN. THERE MAY BE DEPOSITS ON THE AIRBAG CUSHION AND OTHER INTERIOR SURFACES. IN LARGE DOSES, THESE DEPOSITS MAY CAUSE IRRITATION TO THE SKIN AND EYES.

(1) Disconnect and isolate the battery negative cable. If either of the airbags has not been deployed, wait two minutes for the system capacitor to discharge before further service.

(2) From the underside of the steering wheel, remove the two screws that secure the driver airbag to the steering wheel armature (Fig. 15).

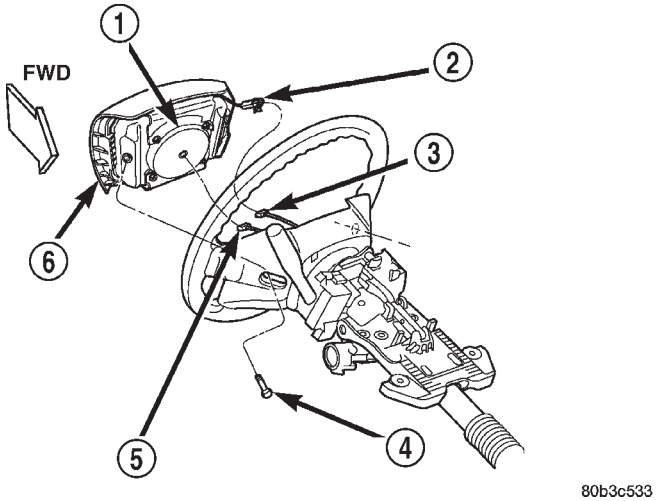

Fig. 15 Driver Airbag Remove/Install

1 - INFLATOR
2 - HORN SWITCH FEED WIRE CONNECTOR
3 - STEERING WHEEL WIRE HARNESS CONNECTOR
4 - SCREW (2)
5 - CLOCKSPRING WIRE HARNESS CONNECTOR
6 - DRIVER AIRBAG

(3) Pull the driver airbag away from the steering wheel far enough to access the two wire harness connectors at the back of the airbag.

(4) Disconnect the steering wheel wire harness connector from the horn switch pigtail wire connector, which is located at the back of the driver airbag.

CAUTION: Do not pull on the clockspring wire harness to disengage the connector from the driver airbag inflator connector receptacle.

(5) The clockspring driver airbag wire harness connector is a tight snap-fit into the airbag inflator connector receptacle, which is located at the back of the driver airbag. Firmly grasp and pull or gently pry on the clockspring driver airbag wire harness connector

DRIVER AIRBAG (Continued)

to disengage it from the airbag inflator connector receptacle.

(6) Remove the driver airbag from the steering wheel.

(7) If the driver side airbag has been deployed, the clockspring must be replaced. (Refer to 8 - ELECTRICAL/RESTRAINTS/CLOCKSPRING - REMOVAL).

DISASSEMBLY

WARNING: DISABLE THE AIRBAG SYSTEM BEFORE ATTEMPTING ANY STEERING WHEEL, STEERING COLUMN, OR INSTRUMENT PANEL COMPONENT DIAGNOSIS OR SERVICE. DISCONNECT AND ISOLATE THE BATTERY NEGATIVE (GROUND) CABLE, THEN WAIT TWO MINUTES FOR THE AIRBAG SYSTEM CAPACITOR TO DISCHARGE BEFORE PERFORMING FURTHER DIAGNOSIS OR SERVICE. THIS IS THE ONLY SURE WAY TO DISABLE THE AIRBAG SYSTEM. FAILURE TO TAKE THE PROPER PRECAUTIONS COULD RESULT IN ACCIDENTAL AIRBAG DEPLOYMENT AND POSSIBLE PERSONAL INJURY.

WARNING: THE HORN SWITCH IS INTEGRAL TO THE DRIVER AIRBAG UNIT. SERVICE OF THIS UNIT SHOULD BE PERFORMED ONLY BY DAIMLERCHRYSLER-TRAINED AND AUTHORIZED DEALER SERVICE TECHNICIANS. FAILURE TO TAKE THE PROPER PRECAUTIONS OR TO FOLLOW THE PROPER PROCEDURES COULD RESULT IN ACCIDENTAL, INCOMPLETE, OR IMPROPER AIRBAG DEPLOYMENT AND POSSIBLE OCCUPANT INJURIES.

(1) Disconnect and isolate the battery negative cable. If either of the airbags has not been deployed, wait two minutes for the system capacitor to discharge before further service.

(2) Remove the driver airbag from the steering wheel. (Refer to 8 - ELECTRICAL/RESTRAINTS/DRIVER AIRBAG - REMOVAL).

(3) Remove the four nuts that secure the upper and lower trim cover retainers to the studs on the back of the driver airbag housing (Fig. 16).

(4) Remove the upper and lower trim cover retainers from the airbag housing studs (Fig. 17).

(5) Disengage the horn switch feed pigtail wire connector retainer from the mounting hole in the upper trim cover retainer.

(6) Remove the horn switch ground pigtail wire eyelet terminal from the upper right airbag housing stud.

(7) Disengage the four trim cover locking blocks from the lip around the outside edge of the driver airbag housing and remove the housing from the cover (Fig. 18).

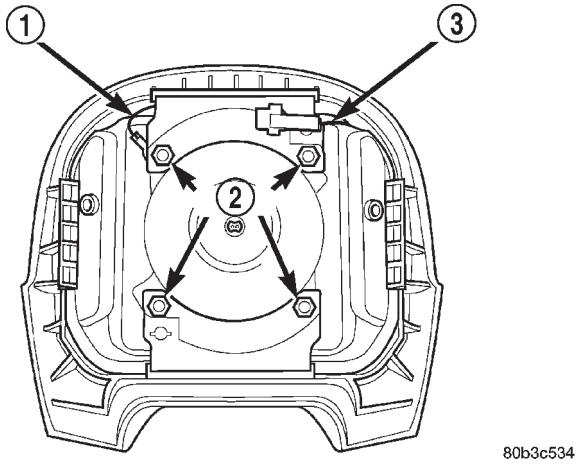

Fig. 16 Driver Airbag Trim Cover Retainer Nuts Remove/Install

1 - HORN SWITCH GROUND PIGTAIL WIRE
2 - NUTS
3 - HORN SWITCH FEED PIGTAIL WIRE

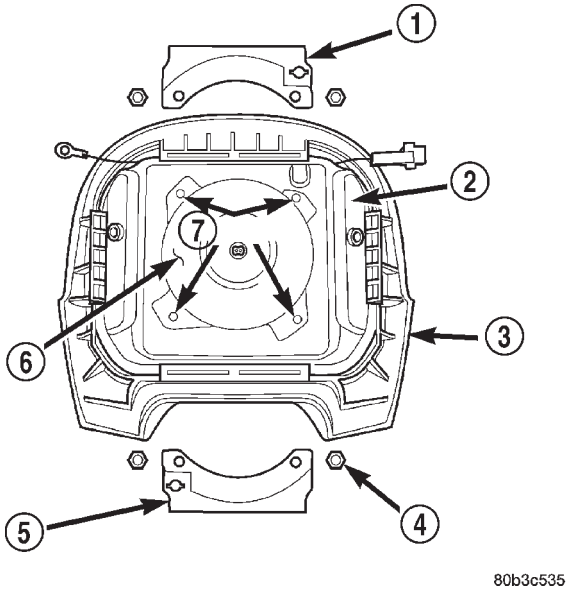

Fig. 17 Driver Airbag Trim Cover Retainers

1 - UPPER RETAINER
2 - AIRBAG HOUSING
3 - TRIM COVER
4 - NUT (4)
5 - LOWER RETAINER
6 - INFLATOR
7 - STUDS

DRIVER AIRBAG (Continued)

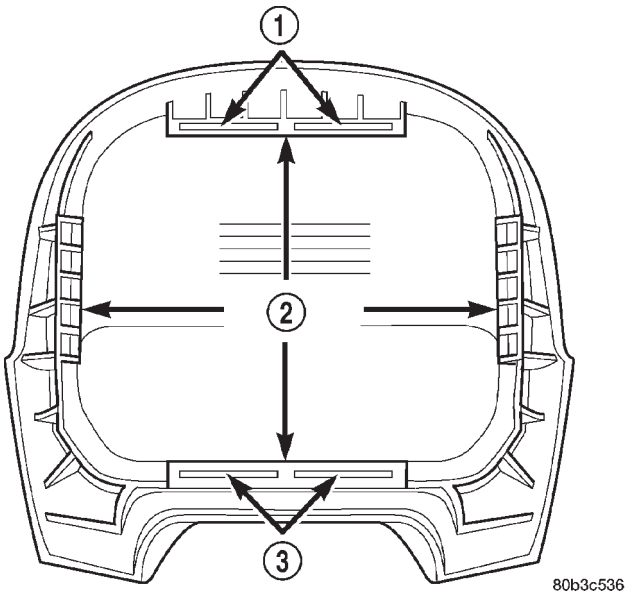

Fig. 18 Driver Airbag Trim Cover Remove/Install

1 - RETAINER SLOTS
2 - LOCKING BLOCKS
3 - RETAINER SLOTS

ASSEMBLY

WARNING: DISABLE THE AIRBAG SYSTEM BEFORE ATTEMPTING ANY STEERING WHEEL, STEERING COLUMN, OR INSTRUMENT PANEL COMPONENT DIAGNOSIS OR SERVICE. DISCONNECT AND ISOLATE THE BATTERY NEGATIVE (GROUND) CABLE, THEN WAIT TWO MINUTES FOR THE AIRBAG SYSTEM CAPACITOR TO DISCHARGE BEFORE PERFORMING FURTHER DIAGNOSIS OR SERVICE. THIS IS THE ONLY SURE WAY TO DISABLE THE AIRBAG SYSTEM. FAILURE TO TAKE THE PROPER PRECAUTIONS COULD RESULT IN ACCIDENTAL AIRBAG DEPLOYMENT AND POSSIBLE PERSONAL INJURY.

WARNING: THE HORN SWITCH IS INTEGRAL TO THE DRIVER AIRBAG UNIT. SERVICE OF THIS UNIT SHOULD BE PERFORMED ONLY BY DAIMLERCHRYSLER-TRAINED AND AUTHORIZED DEALER SERVICE TECHNICIANS. FAILURE TO TAKE THE PROPER PRECAUTIONS OR TO FOLLOW THE PROPER PROCEDURES COULD RESULT IN ACCIDENTAL, INCOMPLETE, OR IMPROPER AIRBAG DEPLOYMENT AND POSSIBLE OCCUPANT INJURIES.

WARNING: USE EXTREME CARE TO PREVENT ANY FOREIGN MATERIAL FROM ENTERING THE DRIVER AIRBAG, OR BECOMING ENTRAPPED BETWEEN THE DRIVER AIRBAG CUSHION AND THE DRIVER AIRBAG TRIM COVER. FAILURE TO OBSERVE THIS WARNING COULD RESULT IN OCCUPANT INJURIES UPON AIRBAG DEPLOYMENT.

WARNING: THE DRIVER AIRBAG TRIM COVER MUST NEVER BE PAINTED. REPLACEMENT TRIM COVERS ARE SERVICED IN THE ORIGINAL COLORS. PAINT MAY CHANGE THE WAY IN WHICH THE MATERIAL OF THE TRIM COVER RESPONDS TO AN AIRBAG DEPLOYMENT. FAILURE TO OBSERVE THIS WARNING COULD RESULT IN OCCUPANT INJURIES UPON AIRBAG DEPLOYMENT.

NOTE: If the horn switch and tray have been removed from the sewn pouch in the airbag cushion retaining strap, be certain that they are properly reinstalled with the horn switch feed and ground pigtail wires properly oriented before assembling the trim cover onto the airbag housing. (Refer to 8 - ELECTRICAL/HORN/HORN SWITCH - INSTALLATION).

(1) Carefully position the driver airbag in the trim cover. Be certain that the horn switch feed and ground pigtail wires are not pinched between the airbag housing and the trim cover locking blocks.

(2) Engage the upper and lower trim cover locking blocks with the lip of the driver airbag housing, then engage the locking blocks on each side of the trim cover with the lip of the housing. Be certain that each of the locking blocks is fully engaged on the lip of the airbag housing (Fig. 19).

(3) Reinstall the horn switch ground pigtail wire eyelet terminal over the right upper airbag housing stud.

(4) Reinstall the upper and lower airbag trim cover retainers over the airbag housing studs. Be certain that the tabs on each retainer are engaged in the retainer slots of the upper and lower trim cover locking blocks (Fig. 18).

(5) Install and tighten the nuts that secure the trim cover retainers to the airbag housing studs. Tighten the nuts to 6.8 N·m (60 in. lbs.).

(6) Engage the horn switch feed pigtail wire connector retainer in the mounting hole in the upper trim cover retainer.

(7) Reinstall the driver airbag onto the steering wheel. (Refer to 8 - ELECTRICAL/RESTRAINTS/DRIVER AIRBAG - INSTALLATION).

DRIVER AIRBAG (Continued)

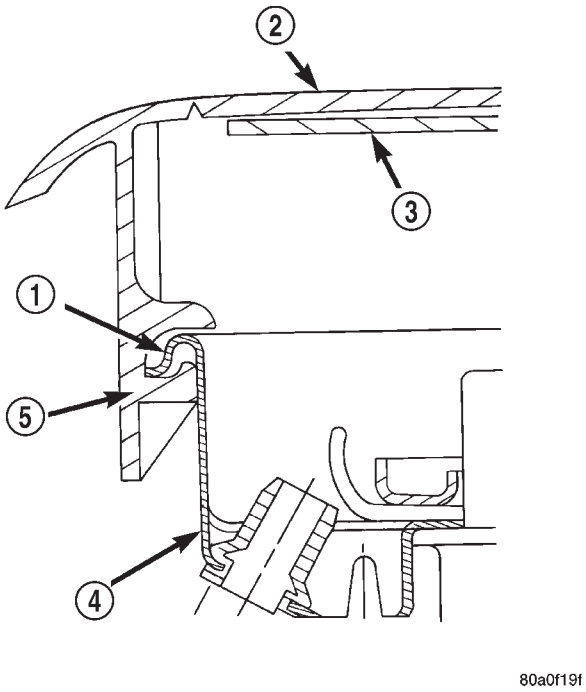

Fig. 19 Driver Airbag Trim Cover Locking Blocks Engaged

1 - LIP
2 - TRIM COVER
3 - HORN SWITCH
4 - AIRBAG HOUSING
5 - LOCKING BLOCK

INSTALLATION

The following procedure is for replacement of a faulty or damaged driver airbag. If the driver airbag has been deployed, the clockspring must also be replaced. (Refer to 8 - ELECTRICAL/RESTRAINTS/ CLOCKSPRING - REMOVAL).

WARNING: DISABLE THE AIRBAG SYSTEM BEFORE ATTEMPTING ANY STEERING WHEEL, STEERING COLUMN, OR INSTRUMENT PANEL COMPONENT DIAGNOSIS OR SERVICE. DISCONNECT AND ISOLATE THE BATTERY NEGATIVE (GROUND) CABLE, THEN WAIT TWO MINUTES FOR THE AIRBAG SYSTEM CAPACITOR TO DISCHARGE BEFORE PERFORMING FURTHER DIAGNOSIS OR SERVICE. THIS IS THE ONLY SURE WAY TO DISABLE THE AIRBAG SYSTEM. FAILURE TO TAKE THE PROPER PRECAUTIONS COULD RESULT IN ACCIDENTAL AIRBAG DEPLOYMENT AND POSSIBLE PERSONAL INJURY.

WARNING: USE EXTREME CARE TO PREVENT ANY FOREIGN MATERIAL FROM ENTERING THE DRIVER AIRBAG, OR BECOMING ENTRAPPED BETWEEN THE DRIVER AIRBAG CUSHION AND THE DRIVER AIRBAG TRIM COVER. FAILURE TO OBSERVE THIS WARNING COULD RESULT IN OCCUPANT INJURIES UPON AIRBAG DEPLOYMENT.

WARNING: THE DRIVER AIRBAG TRIM COVER MUST NEVER BE PAINTED. REPLACEMENT TRIM COVERS ARE SERVICED IN THE ORIGINAL COLORS. PAINT MAY CHANGE THE WAY IN WHICH THE MATERIAL OF THE TRIM COVER RESPONDS TO AN AIRBAG DEPLOYMENT. FAILURE TO OBSERVE THIS WARNING COULD RESULT IN OCCUPANT INJURIES UPON AIRBAG DEPLOYMENT.

(1) Assemble the driver airbag trim cover onto the airbag housing. (Refer to 8 - ELECTRICAL/RESTRAINTS/DRIVER AIRBAG - ASSEMBLY).

(2) When installing the driver airbag, reconnect the clockspring driver airbag wire harness connector to the airbag inflator connector receptacle by pressing straight in on the connector (Fig. 15). You can be certain that the connector is fully engaged by listening carefully for a distinct, audible click as the connector snaps into place.

(3) Reconnect the steering wheel wire harness connector to the horn switch pigtail wire connector, which is secured to the upper trim cover retainer on the back of the driver airbag.

(4) Carefully position the driver airbag in the steering wheel. Be certain that the clockspring and steering wheel wire harnesses in the steering wheel hub area are not pinched between the driver airbag and the steering wheel.

(5) From the underside of the steering wheel, install and tighten the two screws that secure the driver airbag to the steering wheel armature. Tighten the screws to 10.2 N·m (90 in. lbs.).

(6) Do not reconnect the battery negative cable at this time. The airbag system verification test procedure should be performed following service of any airbag system component. (Refer to 8 - ELECTRICAL/RESTRAINTS - STANDARD PROCEDURE - VERIFICATION TEST).

FRONT SEAT BELT & RETRACTOR

REMOVAL

WARNING: DURING AND FOLLOWING ANY SEAT BELT SERVICE, CAREFULLY INSPECT ALL SEAT BELTS, BUCKLES, MOUNTING HARDWARE, AND RETRACTORS FOR PROPER INSTALLATION, OPERATION, OR DAMAGE. REPLACE ANY BELT THAT IS CUT, FRAYED, OR TORN. STRAIGHTEN ANY BELT THAT IS TWISTED. TIGHTEN ANY LOOSE FASTENERS. REPLACE ANY BELT THAT HAS A DAMAGED OR INOPERATIVE BUCKLE OR RETRACTOR. REPLACE ANY BELT THAT HAS A BENT OR DAMAGED LATCH PLATE OR ANCHOR PLATE. NEVER ATTEMPT TO REPAIR A SEAT BELT COMPONENT. ALWAYS REPLACE DAMAGED OR FAULTY SEAT BELT COMPONENTS WITH THE CORRECT, NEW AND UNUSED REPLACEMENT PARTS LISTED IN THE MOPAR PARTS CATALOG.

(1) Move the front seats to their most forward position for easiest access to the front shoulder belt lower seat belt anchor plate, the retractor, and the B-pillar.

(2) Unsnap and lift the front shoulder belt turning loop cover to access the screw that secures the turning loop to the height adjuster (Fig. 20).

(3) Remove the screw that secures the shoulder belt turning loop to the height adjuster.

(4) Remove the shoulder belt turning loop from the height adjuster.

(5) Lift the cover on the lower seat belt anchor plate far enough to access and remove the screw that secures the anchor plate to the B-pillar.

(6) Remove the trim from the lower B-pillar. (Refer to 23 - BODY/INTERIOR/B-PILLAR LOWER TRIM - REMOVAL).

(7) Pull the front seat shoulder belt turning loop and lower seat belt anchor plate through the access hole in the lower B-pillar trim.

(8) Remove the plastic push-in fastener that secures the retractor to the B-pillar (Fig. 21).

(9) Disengage the retractor locator tab from the slot in the B-pillar.

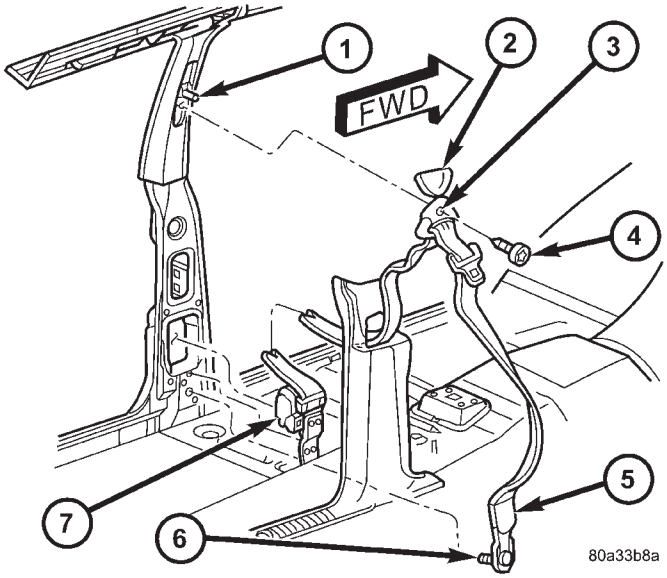

Fig. 20 Front Shoulder Belt

1 - HEIGHT ADJUSTER
2 - COVER
3 - TURNING LOOP
4 - SCREW
5 - ANCHOR PLATE
6 - SCREW
7 - RETRACTOR

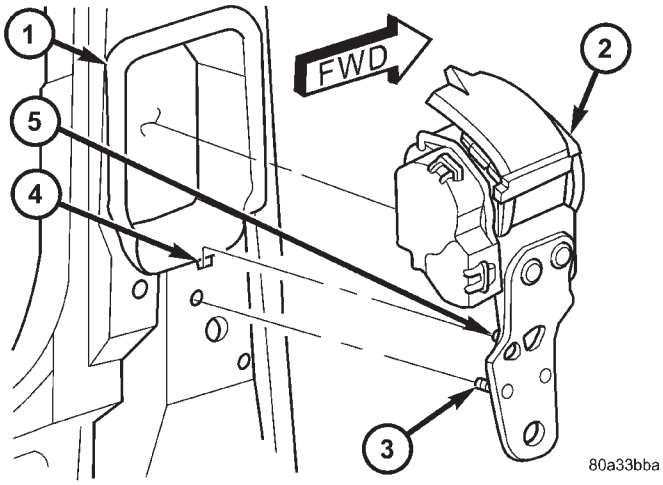

Fig. 21 Front Retractor

1 - SHIELD
2 - RETRACTOR
3 - PLASTIC FASTENER
4 - SLOT
5 - LOCATOR TAB

FRONT SEAT BELT & RETRACTOR (Continued)

INSTALLATION

WARNING: DURING AND FOLLOWING ANY SEAT BELT SERVICE, CAREFULLY INSPECT ALL SEAT BELTS, BUCKLES, MOUNTING HARDWARE, AND RETRACTORS FOR PROPER INSTALLATION, OPERATION, OR DAMAGE. REPLACE ANY BELT THAT IS CUT, FRAYED, OR TORN. STRAIGHTEN ANY BELT THAT IS TWISTED. TIGHTEN ANY LOOSE FASTENERS. REPLACE ANY BELT THAT HAS A DAMAGED OR INOPERATIVE BUCKLE OR RETRACTOR. REPLACE ANY BELT THAT HAS A BENT OR DAMAGED LATCH PLATE OR ANCHOR PLATE. NEVER ATTEMPT TO REPAIR A SEAT BELT COMPONENT. ALWAYS REPLACE DAMAGED OR FAULTY SEAT BELT COMPONENTS WITH THE CORRECT, NEW AND UNUSED REPLACEMENT PARTS LISTED IN THE MOPAR PARTS CATALOG.

(1) Be certain that the retractor shield is properly installed in the B-pillar and in good condition before installing the retractor (Fig. 21).

(2) Position the retractor in the retractor shield and be certain that the retractor locator tab is engaged in the slot in the B-pillar.

(3) Install the plastic push-in fastener that secures the retractor to the B-pillar.

(4) Push the lower seat belt anchor plate and front seat shoulder belt turning loop through the access hole in the lower B-pillar trim (Fig. 20).

(5) Reinstall the trim onto the lower B-pillar. (Refer to 23 - BODY/INTERIOR/B-PILLAR LOWER TRIM - INSTALLATION).

(6) Install and tighten the screw that secures the lower seat belt anchor plate to the B-pillar. Tighten the screw to 37 N·m (27 ft. lbs.).

(7) Pull down the cover on the lower seat belt anchor plate far enough to conceal the screw.

(8) Position the shoulder belt turning loop onto the height adjuster.

(9) Install and tighten the screw that secures the shoulder belt turning loop to the height adjuster. Tighten the screw to 37 N·m (27 ft. lbs.).

(10) Fold and snap the cover over the front shoulder belt turning loop to conceal the screw that secures the turning loop to the height adjuster.

FRONT SEAT BELT BUCKLE

REMOVAL

WARNING: DURING AND FOLLOWING ANY SEAT BELT SERVICE, CAREFULLY INSPECT ALL SEAT BELTS, BUCKLES, MOUNTING HARDWARE, AND RETRACTORS FOR PROPER INSTALLATION, OPERATION, OR DAMAGE. REPLACE ANY BELT THAT IS CUT, FRAYED, OR TORN. STRAIGHTEN ANY BELT THAT IS TWISTED. TIGHTEN ANY LOOSE FASTENERS. REPLACE ANY BELT THAT HAS A DAMAGED OR INOPERATIVE BUCKLE OR RETRACTOR. REPLACE ANY BELT THAT HAS A BENT OR DAMAGED LATCH PLATE OR ANCHOR PLATE. NEVER ATTEMPT TO REPAIR A SEAT BELT COMPONENT. ALWAYS REPLACE DAMAGED OR FAULTY SEAT BELT COMPONENTS WITH THE CORRECT, NEW AND UNUSED REPLACEMENT PARTS LISTED IN THE MOPAR PARTS CATALOG.

(1) Move the front seat to its most forward position for easiest access to the front seat belt buckle lower anchor screw.

(2) On the driver side only, disconnect the seat belt switch pigtail wire connector from the driver side body wire harness connector for the seat belt switch with manual seats, or from the driver side power seat wire harness connector for the seat belt switch with power seats (Fig. 22).

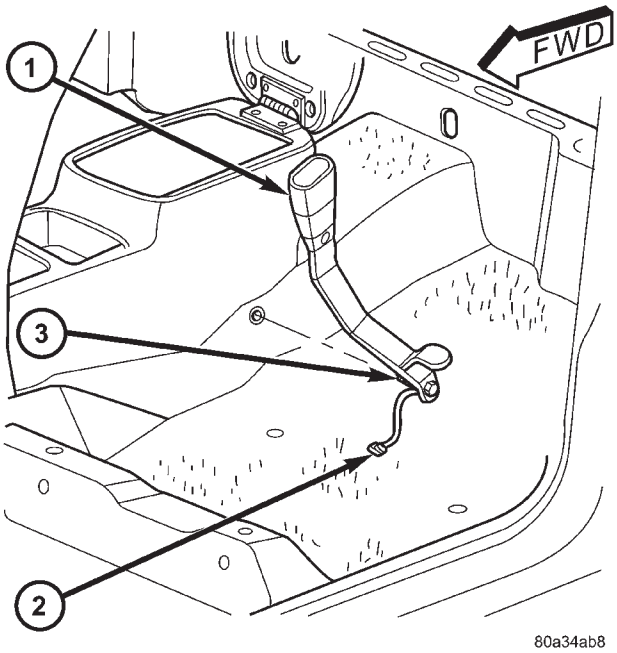

Fig. 22 Front Seat Belt Buckle

1 - SEAT BELT BUCKLE
2 - SEAT BELT SWITCH PIGTAIL WIRE
3 - SCREW

(3) Remove the screw that secures the front seat belt buckle to the side of the floor panel transmission tunnel.

(4) Remove the front seat belt buckle from the floor panel transmission tunnel.

FRONT SEAT BELT BUCKLE (Continued)

INSTALLATION

WARNING: DURING AND FOLLOWING ANY SEAT BELT SERVICE, CAREFULLY INSPECT ALL SEAT BELTS, BUCKLES, MOUNTING HARDWARE, AND RETRACTORS FOR PROPER INSTALLATION, OPERATION, OR DAMAGE. REPLACE ANY BELT THAT IS CUT, FRAYED, OR TORN. STRAIGHTEN ANY BELT THAT IS TWISTED. TIGHTEN ANY LOOSE FASTENERS. REPLACE ANY BELT THAT HAS A DAMAGED OR INOPERATIVE BUCKLE OR RETRACTOR. REPLACE ANY BELT THAT HAS A BENT OR DAMAGED LATCH PLATE OR ANCHOR PLATE. NEVER ATTEMPT TO REPAIR A SEAT BELT COMPONENT. ALWAYS REPLACE DAMAGED OR FAULTY SEAT BELT COMPONENTS WITH THE CORRECT, NEW AND UNUSED REPLACEMENT PARTS LISTED IN THE MOPAR PARTS CATALOG.

(1) Position the front seat belt buckle onto the floor panel transmission tunnel (Fig. 22).

(2) Install and tighten the screw that secures the front seat belt buckle to the side of the floor panel transmission tunnel. Tighten the screw to 43 N·m (32 ft. lbs.).

(3) On the driver side only, reconnect the seat belt switch pigtail wire connector to the driver side body wire harness connector for the seat belt switch with manual seats, or to the driver side power seat wire harness connector for the seat belt switch with power seats.

PASSENGER AIRBAG

DESCRIPTION

The rearward facing surface of the instrument panel top pad above the glove box is the most visible part of the passenger airbag. The airbag used in this model is a Next Generation-type that complies with revised federal airbag standards to deploy with less force than those used in some prior models. The passenger airbag is located in the instrument panel in front of the front seat passenger seating position, where it is secured with four screws to the instrument panel structural duct. Concealed beneath the instrument panel top pad are the passenger airbag door, the folded airbag cushion, the airbag retainer or housing, and the airbag inflator. The airbag inflator is a hybrid-type unit that is secured to and sealed within the extruded aluminum airbag housing along with the folded airbag cushion. A yellow connector on the end of a short, two-wire pigtail harness connects the passenger airbag inflator to the vehicle electrical system.

The stamped steel passenger airbag door is secured on the back of the instrument panel top pad armature between the two passenger side panel outlets. A stamped metal reinforcement is secured to the instrument panel top pad armature near the upper edge of the passenger airbag door opening, and helps to define a predetermined hinge line beneath the decorative cover of the top pad. The instrument panel passenger side bezel is secured to the airbag door from behind with four screws. Following a passenger airbag deployment, the passenger airbag and the instrument panel top pad must be replaced. If inspection reveals that the passenger airbag mounting points on the instrument panel structural duct have been cracked or damaged, the instrument panel structural duct assembly must also be replaced. The passenger airbag cannot be repaired, and must be replaced if faulty or in any way damaged. The passenger airbag door is serviced only as a unit with the instrument panel top pad.

OPERATION

The passenger airbag is deployed by an electrical signal generated by the Airbag Control Module (ACM) through the passenger airbag line 1 and line 2 (or squib) circuits. The hybrid-type inflator assembly includes a small canister of highly compressed argon gas. When the ACM sends the proper electrical signal to the airbag inflator, the electrical energy generates enough heat to ignite chemical pellets within the inflator. Once ignited, these chemical pellets burn rapidly and produce the pressure necessary to rupture a containment disk in the argon gas canister. The inflator and argon gas canister are sealed to the airbag cushion so that all of the released argon gas is directed into the airbag cushion, causing the cushion to inflate. As the cushion inflates, the passenger airbag door will bend back the instrument panel top pad at the predetermined hinge line, then fold back over the top of the instrument panel and out of the way. Following an airbag deployment, the airbag cushion quickly deflates by venting the argon gas through the porous fabric material used on each end panel of the airbag cushion.

Some of the chemicals used to create the pressure to burst the argon gas containment disk are considered hazardous in their solid state, before they are burned, but they are securely sealed within the airbag inflator. However, the gas that is produced when the chemicals are burned is harmless. A small amount of residue from the burned chemicals may cause some temporary discomfort if it contacts the skin, eyes, or breathing passages. If skin or eye irritation is noticed, rinse the affected area with plenty of cool, clean water. If breathing passages are irritated, move to another area where there is plenty of

PASSENGER AIRBAG (Continued)

clean, fresh air to breath. If the irritation is not alleviated by these actions, contact a physician immediately.

REMOVAL

The following procedure is for replacement of a faulty or damaged passenger airbag. If the passenger airbag has been deployed, the instrument panel structural duct must be inspected and the instrument panel top pad must be replaced. (Refer to 23 - BODY/INSTRUMENT PANEL/INSTRUMENT PANEL TOP PAD - REMOVAL). If inspection of the instrument panel structural duct reveals any damage around the mounting points for the passenger airbag, the instrument panel structural duct assembly must be replaced. (Refer to 23 - BODY/INSTRUMENT PANEL/INSTRUMENT PANEL ASSEMBLY - REMOVAL).

WARNING: DISABLE THE AIRBAG SYSTEM BEFORE ATTEMPTING ANY STEERING WHEEL, STEERING COLUMN, OR INSTRUMENT PANEL COMPONENT DIAGNOSIS OR SERVICE. DISCONNECT AND ISOLATE THE BATTERY NEGATIVE (GROUND) CABLE, THEN WAIT TWO MINUTES FOR THE AIRBAG SYSTEM CAPACITOR TO DISCHARGE BEFORE PERFORMING FURTHER DIAGNOSIS OR SERVICE. THIS IS THE ONLY SURE WAY TO DISABLE THE AIRBAG SYSTEM. FAILURE TO TAKE THE PROPER PRECAUTIONS COULD RESULT IN ACCIDENTAL AIRBAG DEPLOYMENT AND POSSIBLE PERSONAL INJURY.

WARNING: WHEN REMOVING A DEPLOYED AIRBAG, RUBBER GLOVES, EYE PROTECTION, AND A LONG-SLEEVED SHIRT SHOULD BE WORN. THERE MAY BE DEPOSITS ON THE AIRBAG UNIT AND OTHER INTERIOR SURFACES. IN LARGE DOSES, THESE DEPOSITS MAY CAUSE IRRITATION TO THE SKIN AND EYES.

(1) Disconnect and isolate the battery negative cable. If either of the airbags has not been deployed, wait two minutes for the system capacitor to discharge before further service.

(2) Remove the top pad from the instrument panel. (Refer to 23 - BODY/INSTRUMENT PANEL/INSTRUMENT PANEL TOP PAD - REMOVAL).

(3) Disconnect the passenger airbag pigtail wire connector from the instrument panel wire harness. This connector is secured to the outside of the airbag unit end bracket.

(4) Remove the two screws that secure the two airbag end bracket front mounting tabs to the top of the instrument panel structural duct (Fig. 23).

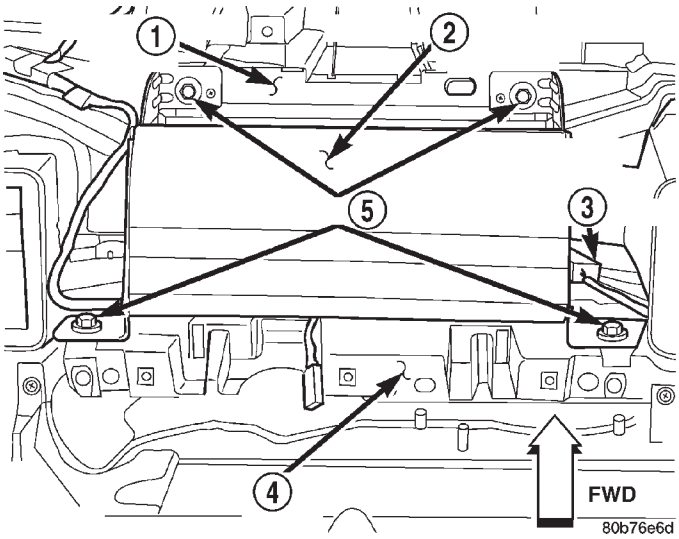

Fig. 23 Passenger Side Airbag Module Remove/ Install

1 - STRUCTURAL DUCT
2 - PASSENGER AIRBAG
3 - WIRE HARNESS CONNECTOR
4 - STRUCTURAL DUCT
5 - SCREWS

(5) Remove the two screws that secure the two airbag end bracket rear mounting tabs to the rear of the structural duct, just above the instrument panel upper glove box opening reinforcement.

(6) Remove the passenger airbag from the instrument panel structural duct.

INSTALLATION

The following procedure is for replacement of a faulty or damaged passenger airbag. If the passenger airbag has been deployed, the instrument panel structural duct must be inspected and the instrument panel top pad must be replaced. (Refer to 23 - BODY/INSTRUMENT PANEL/INSTRUMENT PANEL TOP PAD - REMOVAL). If inspection of the instrument panel structural duct reveals any damage around the mounting points for the passenger airbag, the instrument panel assembly must be replaced. (Refer to 23 - BODY/INSTRUMENT PANEL/INSTRUMENT PANEL ASSEMBLY - REMOVAL).

PASSENGER AIRBAG (Continued)

WARNING: DISABLE THE AIRBAG SYSTEM BEFORE ATTEMPTING ANY STEERING WHEEL, STEERING COLUMN, OR INSTRUMENT PANEL COMPONENT DIAGNOSIS OR SERVICE. DISCONNECT AND ISOLATE THE BATTERY NEGATIVE (GROUND) CABLE, THEN WAIT TWO MINUTES FOR THE AIRBAG SYSTEM CAPACITOR TO DISCHARGE BEFORE PERFORMING FURTHER DIAGNOSIS OR SERVICE. THIS IS THE ONLY SURE WAY TO DISABLE THE AIRBAG SYSTEM. FAILURE TO TAKE THE PROPER PRECAUTIONS COULD RESULT IN ACCIDENTAL AIRBAG DEPLOYMENT AND POSSIBLE PERSONAL INJURY.

WARNING: WHEN REMOVING A DEPLOYED AIRBAG, RUBBER GLOVES, EYE PROTECTION, AND A LONG-SLEEVED SHIRT SHOULD BE WORN. THERE MAY BE DEPOSITS ON THE AIRBAG UNIT AND OTHER INTERIOR SURFACES. IN LARGE DOSES, THESE DEPOSITS MAY CAUSE IRRITATION TO THE SKIN AND EYES.

WARNING: USE EXTREME CARE TO PREVENT ANY FOREIGN MATERIAL FROM ENTERING THE PASSENGER AIRBAG, OR BECOMING ENTRAPPED BETWEEN THE PASSENGER AIRBAG CUSHION AND THE INSTRUMENT PANEL TOP PAD. FAILURE TO OBSERVE THIS WARNING COULD RESULT IN OCCUPANT INJURIES UPON AIRBAG DEPLOYMENT.

WARNING: THE INSTRUMENT PANEL TOP PAD MUST NEVER BE PAINTED. REPLACEMENT TOP PADS ARE SERVICED IN THE ORIGINAL COLORS. PAINT MAY CHANGE THE WAY IN WHICH THE MATERIAL OF THE TOP PAD RESPONDS TO AN AIRBAG DEPLOYMENT. FAILURE TO OBSERVE THIS WARNING COULD RESULT IN OCCUPANT INJURIES UPON AIRBAG DEPLOYMENT.

(1) Carefully position the passenger airbag onto the instrument panel structural duct (Fig. 23).

(2) Install and tighten the four screws that secure the passenger airbag to the instrument panel structural duct. Tighten the screws to 11.8 N·m (105 in. lbs.).

(3) Reconnect the instrument panel wire harness connector for the passenger airbag to the passenger airbag pigtail wire connector. This connector is secured to the outside of the outboard airbag unit end bracket. Be certain that the airbag wire harness connector is fully engaged and latched.

(4) Reinstall the top pad onto the instrument panel. (Refer to 23 - BODY/INSTRUMENT PANEL/INSTRUMENT PANEL TOP PAD - INSTALLATION).

(5) Do not reconnect the battery negative cable at this time. The airbag system verification test procedure should be performed following service of any airbag system component. (Refer to 8 - ELECTRICAL/RESTRAINTS - STANDARD PROCEDURE - VERIFICATION TEST).

REAR SEAT BELT & RETRACTOR

REMOVAL

WARNING: DURING AND FOLLOWING ANY SEAT BELT SERVICE, CAREFULLY INSPECT ALL SEAT BELTS, BUCKLES, MOUNTING HARDWARE, AND RETRACTORS FOR PROPER INSTALLATION, OPERATION, OR DAMAGE. REPLACE ANY BELT THAT IS CUT, FRAYED, OR TORN. STRAIGHTEN ANY BELT THAT IS TWISTED. TIGHTEN ANY LOOSE FASTENERS. REPLACE ANY BELT THAT HAS A DAMAGED OR INOPERATIVE BUCKLE OR RETRACTOR. REPLACE ANY BELT THAT HAS A BENT OR DAMAGED LATCH PLATE OR ANCHOR PLATE. NEVER ATTEMPT TO REPAIR A SEAT BELT COMPONENT. ALWAYS REPLACE DAMAGED OR FAULTY SEAT BELT COMPONENTS WITH THE CORRECT, NEW AND UNUSED REPLACEMENT PARTS LISTED IN THE MOPAR PARTS CATALOG.

(1) Disengage the rear seat cushion latch by pulling upward on the release strap.

(2) Fold the rear seat cushion forward against the back of the front bucket seat.

(3) Remove the screw that secures the lower seat belt anchor plate to the rear floor panel (Fig. 24).

(4) Remove the lower seat belt anchor plate from the rear floor panel.

(5) Unsnap and lift the rear shoulder belt turning loop cover to access the screw that secures the turning loop to the height adjuster.

(6) Remove the screw that secures the shoulder belt turning loop to the height adjuster.

(7) Remove the rear shoulder belt turning loop from the height adjuster.

(8) Remove the trim from the quarter inner panel. (Refer to 23 - BODY/INTERIOR/QUARTER TRIM PANEL - REMOVAL).

(9) Remove the screw that secures the retractor to the mounting tab on the rear wheelhouse flange.

(10) Disengage the retractor locator tab from the slot in the C-pillar.

REAR SEAT BELT & RETRACTOR (Continued)

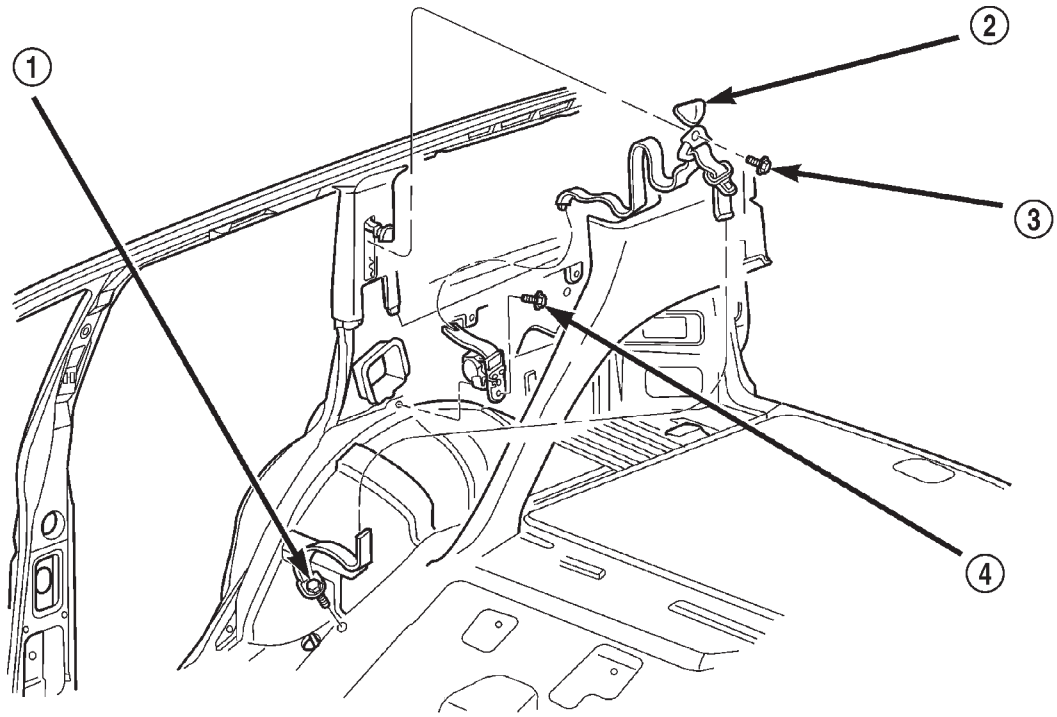

REAR SEAT/SHOULDER BELT

80bceab9

Fig. 24 Rear Shoulder Belt

1 - SCREW
2 - TURNING LOOP COVER
3 - SCREW
4 - SCREW

INSTALLATION

WARNING: DURING AND FOLLOWING ANY SEAT BELT SERVICE, CAREFULLY INSPECT ALL SEAT BELTS, BUCKLES, MOUNTING HARDWARE, AND RETRACTORS FOR PROPER INSTALLATION, OPERATION, OR DAMAGE. REPLACE ANY BELT THAT IS CUT, FRAYED, OR TORN. STRAIGHTEN ANY BELT THAT IS TWISTED. TIGHTEN ANY LOOSE FASTENERS. REPLACE ANY BELT THAT HAS A DAMAGED OR INOPERATIVE BUCKLE OR RETRACTOR. REPLACE ANY BELT THAT HAS A BENT OR DAMAGED LATCH PLATE OR ANCHOR PLATE. NEVER ATTEMPT TO REPAIR A SEAT BELT COMPONENT. ALWAYS REPLACE DAMAGED OR FAULTY SEAT BELT COMPONENTS WITH THE CORRECT, NEW AND UNUSED REPLACEMENT PARTS LISTED IN THE MOPAR PARTS CATALOG.

(1) Be certain that the retractor shield is properly installed in the C-pillar and in good condition before installing the retractor.

(2) Position the retractor in the retractor shield and be certain that the retractor locator tab is engaged in the slot in the C-pillar below the retractor shield (Fig. 25).

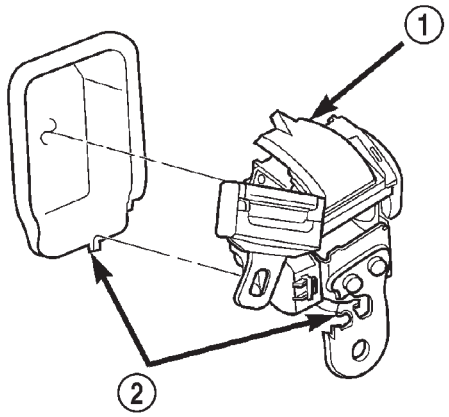

80bdbce6

Fig. 25 Rear Retractor

1 - RETRACTOR
2 - SLOT/LOCATOR TAB

(3) Install and tighten the screw that secures the retractor to the mounting tab on the rear wheelhouse flange (Fig. 24). Tighten the screw to 43 N·m (32 ft. lbs.).

REAR SEAT BELT & RETRACTOR (Continued)

(4) Reinstall the trim onto the quarter inner panel. (Refer to 23 - BODY/INTERIOR/QUARTER TRIM PANEL - INSTALLATION).

(5) Position the rear shoulder belt turning loop to the height adjuster.

(6) Install and tighten the screw that secures the shoulder belt turning loop to the height adjuster. Tighten the screw to 37 N·m (27 ft. lbs.).

(7) Fold and snap the cover over the rear shoulder belt turning loop to conceal the screw that secures the turning loop to the height adjuster.

(8) Position the lower seat belt anchor plate to the rear floor panel.

(9) Install and tighten the screw that secures the lower seat belt anchor plate to the rear floor panel. Tighten the screw to 43 N·m (32 ft. lbs.).

(10) Fold the rear seat cushion backward until the rear seat cushion latch is fully engaged.

REAR SEAT BELT BUCKLE

REMOVAL

WARNING: DURING AND FOLLOWING ANY SEAT BELT SERVICE, CAREFULLY INSPECT ALL SEAT BELTS, BUCKLES, MOUNTING HARDWARE, AND RETRACTORS FOR PROPER INSTALLATION, OPERATION, OR DAMAGE. REPLACE ANY BELT THAT IS CUT, FRAYED, OR TORN. STRAIGHTEN ANY BELT THAT IS TWISTED. TIGHTEN ANY LOOSE FASTENERS. REPLACE ANY BELT THAT HAS A DAMAGED OR INOPERATIVE BUCKLE OR RETRACTOR. REPLACE ANY BELT THAT HAS A BENT OR DAMAGED LATCH PLATE OR ANCHOR PLATE. NEVER ATTEMPT TO REPAIR A SEAT BELT COMPONENT. ALWAYS REPLACE DAMAGED OR FAULTY SEAT BELT COMPONENTS WITH THE CORRECT, NEW AND UNUSED REPLACEMENT PARTS LISTED IN THE MOPAR PARTS CATALOG.

(1) Disengage the rear seat cushion latch by pulling upward on the release strap.

(2) Fold the rear seat cushion forward against the back of the front bucket seat.

(3) Remove the screw that secures the anchor plate of the rear seat lap belt/buckle unit (left side) or buckle/buckle unit (right side) to the rear floor panel (Fig. 26).

(4) Remove the rear seat lap belt/buckle unit (left side) or buckle/buckle unit (right side) from the rear floor panel.

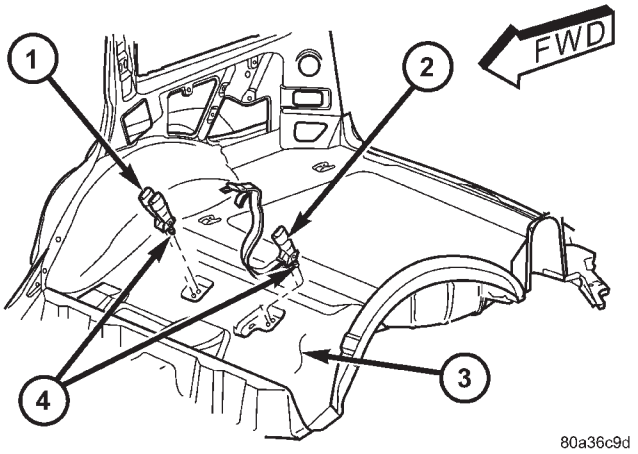

Fig. 26 Rear Seat Lap Belt/Buckle

1 - REAR SEAT BUCKLE/BUCKLE UNIT
2 - REAR SEAT LAP BELT/BUCKLE UNIT
3 - REAR FLOOR PANEL
4 - SCREW

INSTALLATION

WARNING: DURING AND FOLLOWING ANY SEAT BELT SERVICE, CAREFULLY INSPECT ALL SEAT BELTS, BUCKLES, MOUNTING HARDWARE, AND RETRACTORS FOR PROPER INSTALLATION, OPERATION, OR DAMAGE. REPLACE ANY BELT THAT IS CUT, FRAYED, OR TORN. STRAIGHTEN ANY BELT THAT IS TWISTED. TIGHTEN ANY LOOSE FASTENERS. REPLACE ANY BELT THAT HAS A DAMAGED OR INOPERATIVE BUCKLE OR RETRACTOR. REPLACE ANY BELT THAT HAS A BENT OR DAMAGED LATCH PLATE OR ANCHOR PLATE. NEVER ATTEMPT TO REPAIR A SEAT BELT COMPONENT. ALWAYS REPLACE DAMAGED OR FAULTY SEAT BELT COMPONENTS WITH THE CORRECT, NEW AND UNUSED REPLACEMENT PARTS LISTED IN THE MOPAR PARTS CATALOG.

(1) Position the rear seat lap belt/buckle unit (left side) or buckle/buckle unit (right side) onto the rear floor panel (Fig. 26). Be certain the locator tab on the anchor plate is installed in the locator hole near the mounting hole in the rear floor panel.

(2) Install and tighten the screw that secures the anchor plate of the rear seat lap belt/buckle unit (left side) or buckle/buckle unit (right side) to the rear floor panel. Tighten the screw to 43 N·m (32 ft. lbs.).

(3) Fold the rear seat cushion backward until the rear seat cushion latch is fully engaged.

SEAT BELT SWITCH

DESCRIPTION

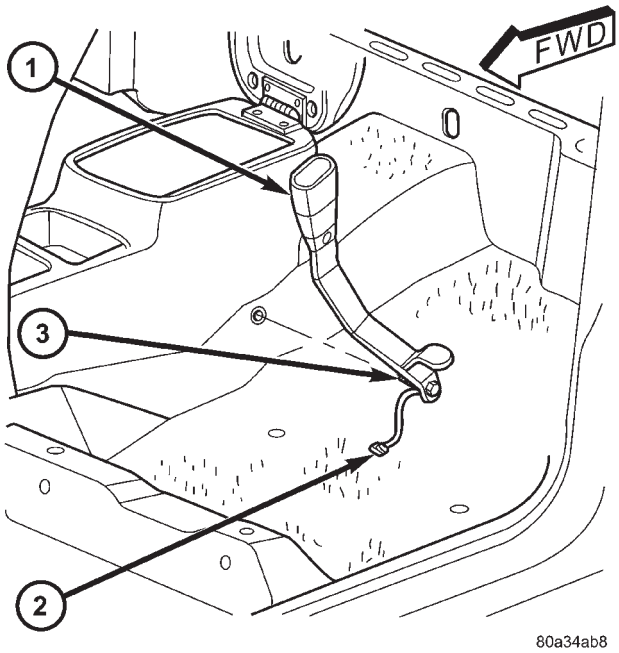

Fig. 27 Front Seat Belt Buckle

1 - SEAT BELT BUCKLE
2 - SEAT BELT SWITCH PIGTAIL WIRE
3 - SCREW

The seat belt switch is a small, normally closed, single pole, single throw, leaf contact, momentary switch. Only one seat belt switch is installed in the vehicle, and it is integral to the buckle of the driver seat belt buckle-half, located between the inboard side of the driver side front seat and the floor panel transmission tunnel (Fig. 27). The seat belt switch is connected to the vehicle electrical system through a two-wire pigtail wire and connector on the seat belt buckle-half, which is connected to a wire harness connector and take out of the driver side body wire harness with manual seats, or of the driver side power seat wire harness with power seats.

The seat belt switch cannot be adjusted or repaired and, if faulty or damaged, the entire driver seat belt buckle-half unit must be replaced.

OPERATION

The seat belt switch is designed to control a path to ground for the seat belt switch sense input of the Body Control Module (BCM). When the driver side seat belt tip-half is inserted in the seat belt buckle, the switch opens the path to ground; and, when the driver side seat belt tip-half is removed from the seat belt buckle, the switch closes the ground path. The switch is actuated by the latch mechanism within the seat belt buckle. The BCM monitors the driver seat belt switch status through an internal pull-up, then sends the proper switch status messages to other electronic modules over the Programmable Communications Interface (PCI) data bus network. The driver seat belt switch status is also used by the BCM as an input for chime warning system operation.

The seat belt switch receives ground through its pigtail wire connection to the driver side body wire harness with manual seats, or to the driver side power seat and body wire harnesses with power seats from a take out of the instrument panel floor wire harness. An eyelet terminal connector on that ground take out is secured under a nut to a ground stud on the floor panel transmission tunnel, forward of the Airbag Control Module (ACM) mount. The seat belt switch is connected in series between ground and the seat belt switch sense input of the BCM.

DIAGNOSIS AND TESTING - SEAT BELT SWITCH

Refer to the appropriate wiring information. The wiring information includes wiring diagrams, proper wire and connector repair procedures, details of wire harness routing and retention, connector pin-out information and location views for the various wire harness connectors, splices and grounds.

WARNING: ON VEHICLES EQUIPPED WITH AIRBAGS, DISABLE THE AIRBAG SYSTEM BEFORE ATTEMPTING ANY STEERING WHEEL, STEERING COLUMN, OR INSTRUMENT PANEL COMPONENT DIAGNOSIS OR SERVICE. DISCONNECT AND ISOLATE THE BATTERY NEGATIVE (GROUND) CABLE, THEN WAIT TWO MINUTES FOR THE AIRBAG SYSTEM CAPACITOR TO DISCHARGE BEFORE PERFORMING FURTHER DIAGNOSIS OR SERVICE. THIS IS THE ONLY SURE WAY TO DISABLE THE AIRBAG SYSTEM. FAILURE TO TAKE THE PROPER PRECAUTIONS COULD RESULT IN ACCIDENTAL AIRBAG DEPLOYMENT AND POSSIBLE PERSONAL INJURY.

(1) Disconnect and isolate the battery negative cable. Disconnect the driver side body wire harness connector for the seat belt switch (manual seat), or the driver side power seat wire harness connector for the seat belt switch (power seat) from the seat belt switch pigtail wire connector located on the floor panel under the driver side front seat cushion. Check for continuity between the seat belt switch sense circuit and the ground circuit cavities in the seat belt switch pigtail wire connector. There should be continuity with the driver side seat belt tip-half and buckle-half unfastened, and no continuity with tip-half

SEAT BELT SWITCH (Continued)

and buckle-half fastened. If OK, go to Step 2. If not OK, replace the faulty driver side seat belt buckle-half unit.

(2) Check for continuity between the ground circuit cavity in the driver side body wire harness connector for the seat belt switch (manual seat), or the driver side power seat wire harness connector for the seat belt switch (power seat) and a good ground. There should be continuity. If OK, go to Step 3. If not OK, repair the open ground circuit to ground (G200) as required.

(3) Disconnect the 52-way driver side body wire harness connector from the Junction Block (JB). Check for continuity between the seat belt switch sense circuit cavity in the driver side body wire harness connector for the seat belt switch (manual seat), or the driver side power seat wire harness connector for the seat belt switch (power seat) and a good ground. There should be no continuity. If OK, go to Step 4. If not OK, repair the shorted seat belt switch sense circuit between the seat belt switch and the JB as required.

(4) Check for continuity between the seat belt switch sense circuit cavities in the driver side body wire harness connector for the seat belt switch (manual seat), or the driver side power seat wire harness connector for the seat belt switch (power seat) and the 52-way driver side body wire harness connector for the JB. There should be continuity. If OK, proceed to the diagnosis for the Body Control Module (BCM). (Refer to 8 - ELECTRICAL/ELECTRONIC CONTROL MODULES/BODY CONTROL/CENTRAL TIMER MODULE - DIAGNOSIS AND TESTING). If not OK, repair the open seat belt switch sense circuit between the seat belt switch and the JB as required.

SEAT BELT TURNING LOOP ADJUSTER

REMOVAL

WARNING: DURING AND FOLLOWING ANY SEAT BELT SERVICE, CAREFULLY INSPECT ALL SEAT BELTS, BUCKLES, MOUNTING HARDWARE, AND RETRACTORS FOR PROPER INSTALLATION, OPERATION, OR DAMAGE. REPLACE ANY BELT THAT IS CUT, FRAYED, OR TORN. STRAIGHTEN ANY BELT THAT IS TWISTED. TIGHTEN ANY LOOSE FASTENERS. REPLACE ANY BELT THAT HAS A DAMAGED OR INOPERATIVE BUCKLE OR RETRACTOR. REPLACE ANY BELT THAT HAS A BENT OR DAMAGED LATCH PLATE OR ANCHOR PLATE. NEVER ATTEMPT TO REPAIR A SEAT BELT COMPONENT. ALWAYS REPLACE DAMAGED OR FAULTY SEAT BELT COMPONENTS WITH THE CORRECT, NEW AND UNUSED REPLACEMENT PARTS LISTED IN THE MOPAR PARTS CATALOG.

(1) Remove the knob from the lever of the front or rear seat belt turning loop adjuster. (Refer to 8 - ELECTRICAL/RESTRAINTS/TURNING LOOP HEIGHT ADJUSTER KNOB - REMOVAL).

(2) Remove the anchor screw that secures the front or rear seat belt turning loop to the adjuster.

(3) Remove the trim from the upper B-pillar (front seat belt adjuster) or upper C-pillar (rear seat belt adjuster). (Refer to 23 - BODY/INTERIOR/B-PILLAR UPPER TRIM - REMOVAL) or (Refer to 23 - BODY/INTERIOR/C-PILLAR TRIM - REMOVAL).

(4) Remove the screw that secures the upper end of the front or rear height adjuster to the pillar (Fig. 28).

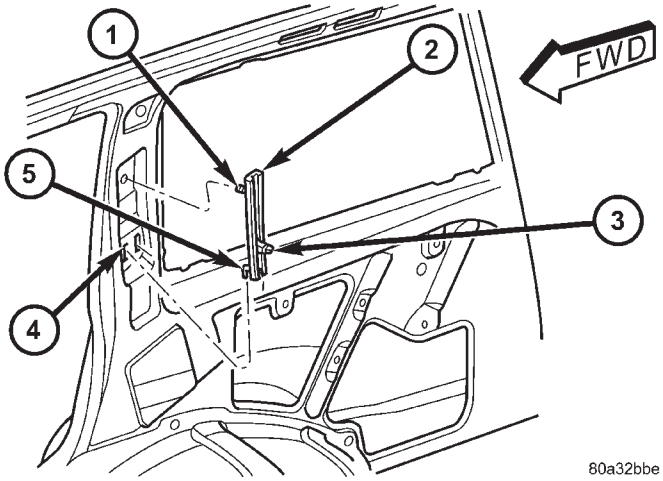

Fig. 28 Seat Belt Turning Loop Adjuster - Typical

1 - SCREW (1)
2 - ADJUSTER
3 - LEVER
4 - SLOTS (2)
5 - HOOKS (2)

(5) Pull the upper end of the height adjuster away from the pillar far enough to disengage the hooks on the lower end of the adjuster from the slots in the pillar.

(6) Remove the adjuster from the B-pillar (front seat belt) or C-pillar (rear seat belt).

SEAT BELT TURNING LOOP ADJUSTER (Continued)

INSTALLATION

WARNING: DURING AND FOLLOWING ANY SEAT BELT SERVICE, CAREFULLY INSPECT ALL SEAT BELTS, BUCKLES, MOUNTING HARDWARE, AND RETRACTORS FOR PROPER INSTALLATION, OPERATION, OR DAMAGE. REPLACE ANY BELT THAT IS CUT, FRAYED, OR TORN. STRAIGHTEN ANY BELT THAT IS TWISTED. TIGHTEN ANY LOOSE FASTENERS. REPLACE ANY BELT THAT HAS A DAMAGED OR INOPERATIVE BUCKLE OR RETRACTOR. REPLACE ANY BELT THAT HAS A BENT OR DAMAGED LATCH PLATE OR ANCHOR PLATE. NEVER ATTEMPT TO REPAIR A SEAT BELT COMPONENT. ALWAYS REPLACE DAMAGED OR FAULTY SEAT BELT COMPONENTS WITH THE CORRECT, NEW AND UNUSED REPLACEMENT PARTS LISTED IN THE MOPAR PARTS CATALOG.

(1) Position the adjuster to the B-pillar (front seat belt) or C-pillar (rear seat belt).

(2) Engage the hooks on the lower end of the adjuster into the slots in the pillar (Fig. 28).

(3) Tilt the upper end of the height adjuster into position against the pillar.

(4) Install and tighten the screw that secures the upper end of the front or rear height adjuster to the pillar. Tighten the screw to 61 N·m (45 ft. lbs.).

(5) Reinstall the trim onto the upper B-pillar (front seat belt adjuster) or upper C-pillar (rear seat belt adjuster). (Refer to 23 - BODY/INTERIOR/B-PILLAR UPPER TRIM - INSTALLATION) or (Refer to 23 - BODY/INTERIOR/C-PILLAR TRIM - INSTALLATION).

(6) Install and tighten the anchor screw that secures the front or rear seat belt turning loop to the adjuster. Tighten the screw to 37 N·m (27 ft. lbs.).

(7) Reinstall the knob onto the lever of the front or rear seat belt turning loop adjuster. (Refer to 8 - ELECTRICAL/RESTRAINTS/TURNING LOOP HEIGHT ADJUSTER KNOB - INSTALLATION).

TURNING LOOP HEIGHT ADJUSTER KNOB

REMOVAL

WARNING: DURING AND FOLLOWING ANY SEAT BELT SERVICE, CAREFULLY INSPECT ALL SEAT BELTS, BUCKLES, MOUNTING HARDWARE, AND RETRACTORS FOR PROPER INSTALLATION, OPERATION, OR DAMAGE. REPLACE ANY BELT THAT IS CUT, FRAYED, OR TORN. STRAIGHTEN ANY BELT THAT IS TWISTED. TIGHTEN ANY LOOSE FASTENERS. REPLACE ANY BELT THAT HAS A DAMAGED OR INOPERATIVE BUCKLE OR RETRACTOR. REPLACE ANY BELT THAT HAS A BENT OR DAMAGED LATCH PLATE OR ANCHOR PLATE. NEVER ATTEMPT TO REPAIR A SEAT BELT COMPONENT. ALWAYS REPLACE DAMAGED OR FAULTY SEAT BELT COMPONENTS WITH THE CORRECT, NEW AND UNUSED REPLACEMENT PARTS LISTED IN THE MOPAR PARTS CATALOG.

(1) Unsnap and lift the front or rear seat belt turning loop cover to expose the anchor screw that secures the turning loop to the adjuster (Fig. 29).

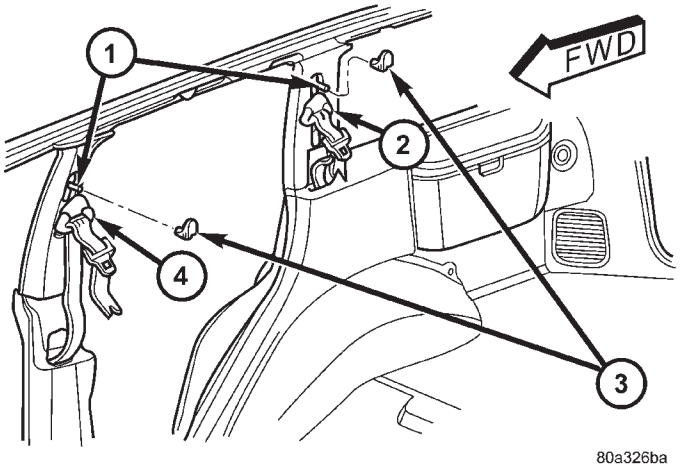

Fig. 29 Turning Loop Height Adjuster Knobs

1 - ADJUSTER LEVERS
2 - REAR TURNING LOOP
3 - KNOBS
4 - FRONT TURNING LOOP

(2) Using the head of the turning loop anchor screw as a fulcrum, carefully pry the knob from the height adjuster lever with a suitable trim tool (Fig. 30).

TURNING LOOP HGT ADJUSTER KNOB (Continued)

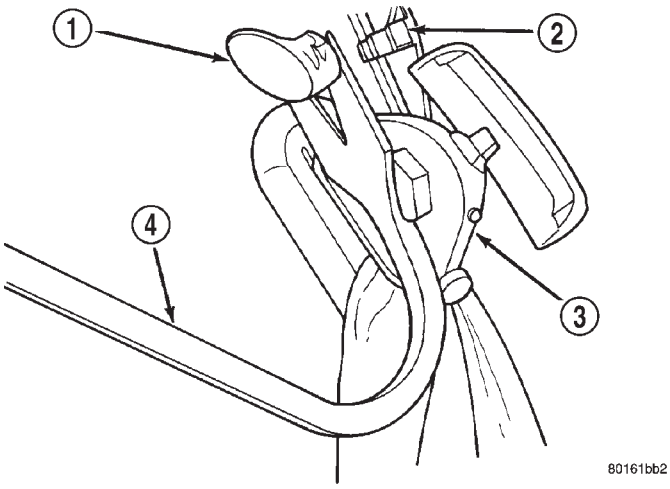

Fig. 30 Turning Loop Height Adjuster Knob Removal - Typical

1 - KNOB
2 - ADJUSTER LEVER
3 - SEAT BELT TURNING LOOP
4 - TRIM TOOL (SNAP-ON A179A)

INSTALLATION

WARNING: DURING AND FOLLOWING ANY SEAT BELT SERVICE, CAREFULLY INSPECT ALL SEAT BELTS, BUCKLES, MOUNTING HARDWARE, AND RETRACTORS FOR PROPER INSTALLATION, OPERATION, OR DAMAGE. REPLACE ANY BELT THAT IS CUT, FRAYED, OR TORN. STRAIGHTEN ANY BELT THAT IS TWISTED. TIGHTEN ANY LOOSE FASTENERS. REPLACE ANY BELT THAT HAS A DAMAGED OR INOPERATIVE BUCKLE OR RETRACTOR. REPLACE ANY BELT THAT HAS A BENT OR DAMAGED LATCH PLATE OR ANCHOR PLATE. NEVER ATTEMPT TO REPAIR A SEAT BELT COMPONENT. ALWAYS REPLACE DAMAGED OR FAULTY SEAT BELT COMPONENTS WITH THE CORRECT, NEW AND UNUSED REPLACEMENT PARTS LISTED IN THE MOPAR PARTS CATALOG.

(1) Fold and snap the front or rear seat belt turning loop cover back into place over the anchor screw that secures the turning loop to the adjuster (Fig. 29).

(2) Position the height adjuster knob to the front or rear seat belt turning loop height adjuster lever.

(3) Using hand pressure, push the knob firmly and evenly onto the lever until it is fully engaged.

SPEED CONTROL

TABLE OF CONTENTS

page

SPEED CONTROL
DESCRIPTION 1
OPERATION 1
DIAGNOSIS AND TESTING 2
ROAD TEST 2
SPECIFICATIONS 2
CABLE
DESCRIPTION 3
OPERATION 3
REMOVAL 3
INSTALLATION 3
SERVO
DESCRIPTION 4
OPERATION 5
REMOVAL 5
INSTALLATION 6
SWITCH
DESCRIPTION 6
OPERATION 6
REMOVAL 7
INSTALLATION 7
VACUUM RESERVOIR
DESCRIPTION 7
OPERATION 7
DIAGNOSIS AND TESTING 8
VACUUM SUPPLY TEST 8
REMOVAL 8
INSTALLATION 8

SPEED CONTROL

DESCRIPTION

The speed control system is electronically controlled and vacuum operated. Electronic control of the speed control system is integrated into the Powertrain Control Module (PCM). The controls consist of two steering wheel mounted switches. The switches are labeled: ON/OFF, RES/ACCEL, SET, COAST, and CANCEL.

The system is designed to operate at speeds above 30 mph (50 km/h).

WARNING: THE USE OF SPEED CONTROL IS NOT RECOMMENDED WHEN DRIVING CONDITIONS DO NOT PERMIT MAINTAINING A CONSTANT SPEED, SUCH AS IN HEAVY TRAFFIC OR ON ROADS THAT ARE WINDING, ICY, SNOW COVERED, OR SLIPPERY.

OPERATION

When speed control is selected by depressing the ON switch, the PCM allows a set speed to be stored in PCM RAM for speed control. To store a set speed, depress the SET switch while the vehicle is moving at a speed between 35 and 85 mph. In order for the speed control to engage, the brakes cannot be applied, nor can the gear selector be indicating the transmission is in Park or Neutral.

The speed control can be disengaged manually by:

- Stepping on the brake pedal
- Depressing the OFF switch
- Depressing the CANCEL switch.
- Depressing the clutch pedal (if equipped).

NOTE: Depressing the OFF switch or turning off the ignition switch will erase the set speed stored in the PCM.

For added safety, the speed control system is programmed to disengage for any of the following conditions:

- An indication of Park or Neutral
- A rapid increase rpm (indicates that the clutch has been disengaged)
- Excessive engine rpm (indicates that the transmission may be in a low gear)
- The speed signal increases at a rate of 10 mph per second (indicates that the coefficient of friction between the road surface and tires is extremely low)
- The speed signal decreases at a rate of 10 mph per second (indicates that the vehicle may have decelerated at an extremely high rate)

Once the speed control has been disengaged, depressing the RES/ACCEL switch (when speed is greater than 30 mph) restores the vehicle to the target speed that was stored in the PCM.

While the speed control is engaged, the driver can increase the vehicle speed by depressing the RES/ACCEL switch. The new target speed is stored in the PCM when the RES/ACCEL is released. The PCM also has a ″tap-up″ feature in which vehicle speed increases at a rate of approximately 2 mph for each momentary switch activation of the RES/ACCEL switch.

SPEED CONTROL (Continued)

A “tap down” feature is used to decelerate without disengaging the speed control system. To decelerate from an existing recorded target speed, momentarily depress the COAST switch. For each switch activation, speed will be lowered approximately 1 mph.

OVERSHOOT/UNDERSHOOT

If the vehicle operator repeatedly presses and releases the SET button with their foot off of the accelerator (referred to as a “lift foot set”), the vehicle may accelerate and exceed the desired set speed by up to 5 mph (8 km/h). It may also decelerate to less than the desired set speed, before finally achieving the desired set speed.

The Speed Control System has an adaptive strategy that compensates for vehicle-to-vehicle variations in speed control cable lengths. When the speed control is set with the vehicle operators foot off of the accelerator pedal, the speed control thinks there is excessive speed control cable slack and adapts accordingly. If the “lift foot sets” are continually used, a speed control overshoot/undershoot condition will develop.

To “unlearn” the overshoot/undershoot condition, the vehicle operator has to press and release the set button while maintaining the desired set speed using the accelerator pedal (not decelerating or accelerating), and then turning the cruise control switch to the OFF position (or press the CANCEL button if equipped) after waiting 10 seconds. This procedure must be performed approximately 10–15 times to completely unlearn the overshoot/undershoot condition.

DIAGNOSIS AND TESTING - ROAD TEST

Perform a vehicle road test to verify reports of speed control system malfunction. The road test should include attention to the speedometer. Speedometer operation should be smooth and without flutter at all speeds.

Flutter in the speedometer indicates a problem which might cause surging in the speed control system. The cause of any speedometer problems should be corrected before proceeding. Refer to Group 8E, Instrument Panel and Gauges for speedometer diagnosis.

If a road test verifies a system problem and the speedometer operates properly, check for:

- A Diagnostic Trouble Code (DTC). If a DTC exists, conduct tests per the Powertrain Diagnostic Procedures service manual.
- A misadjusted brake (stop) lamp switch. This could also cause an intermittent problem.
- Loose, damaged or corroded electrical connections at the servo. Corrosion should be removed from electrical terminals and a light coating of Mopar MultiPurpose Grease, or equivalent, applied.
- Leaking vacuum reservoir.
- Loose or leaking vacuum hoses or connections.
- Defective one-way vacuum check valve.
- Secure attachment of both ends of the speed control servo cable.
- Smooth operation of throttle linkage and throttle body air valve.
- Failed speed control servo. Do the servo vacuum test.

CAUTION: When test probing for voltage or continuity at electrical connectors, care must be taken not to damage connector, terminals or seals. If these components are damaged, intermittent or complete system failure may occur.

SPECIFICATIONS

TORQUE - SPEED CONTROL

DESCRIPTION	N-m	Ft. Lbs.	In. Lbs.
Servo Mounting Bracket-to-Servo Nuts	8.5		75
Servo Mounting Bracket-to-Body Nuts	28 ± 6		250 ± 50
Switch Module Mounting Screws	.6-1		6-9
Vacuum Reservoir Mounting Bolts	3		25

CABLE

DESCRIPTION

The speed control servo cable is connected between the speed control vacuum servo diaphragm and the throttle body control linkage.

OPERATION

This cable causes the throttle control linkage to open or close the throttle valve in response to movement of the vacuum servo diaphragm.

REMOVAL - 4.0L

(1) Disconnect negative battery cable at battery.

(2) Remove air box housing from throttle body.

(3) Using finger pressure only, remove speed control cable connector at throttle body bellcrank pin by pushing connector off bellcrank pin towards drivers side of vehicle (Fig. 1). **DO NOT try to pull connector off perpendicular to the bellcrank pin. Connector will be broken.**

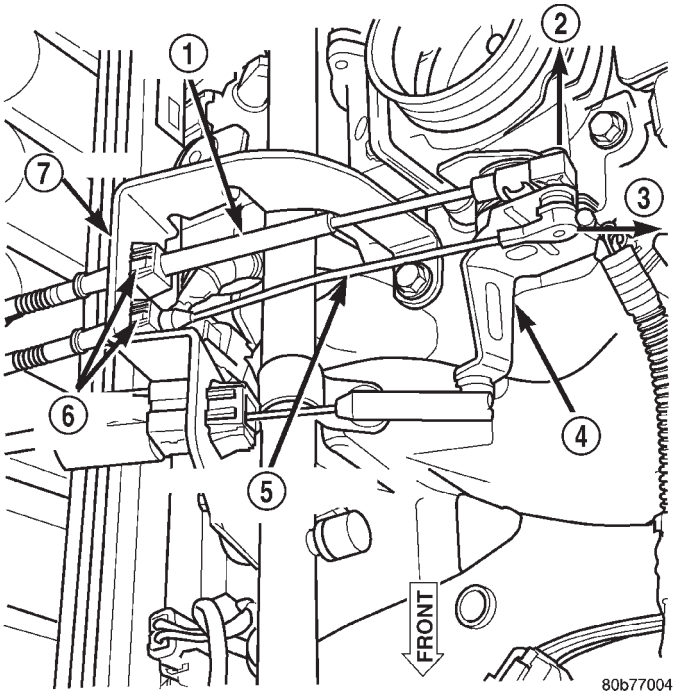

Fig. 1 Speed Control Cable at Bell Crank—4.0L Engine

1 - ACCELERATOR CABLE
2 - OFF
3 - OFF
4 - THROTTLE BODY BELLCRANK
5 - SPEED CONTROL CABLE
6 - RELEASE TABS
7 - BRACKET

(4) Remove cable from cable guide at top of valve cover.

(5) Squeeze 2 release tabs (Fig. 1) on sides of cable at bracket and push cable out of bracket.

(6) Remove servo cable from servo. Refer to Speed Control Servo Removal/Installation.

REMOVAL - 4.7L

(1) Disconnect negative battery cable at battery.

(2) Remove air box housing from throttle body.

The accelerator cable must be partially removed to gain access to speed control cable.

(3) Using finger pressure only, disconnect accelerator cable connector at throttle body bellcrank pin by pushing connector off bellcrank pin towards front of vehicle (Fig. 2). **DO NOT try to pull connector off perpendicular to the bellcrank pin. Connector will be broken.**

(4) Lift accelerator cable from top of cable cam (Fig. 2).

(5) Press tab (Fig. 3) to release plastic cable mount from bracket. **Press on tab only enough to release cable from bracket. If tab is pressed too much, it will be broken.** Slide plastic mount (Fig. 3) towards passenger side of vehicle to remove cable from bracket.

(6) Using finger pressure only, disconnect speed control cable connector at throttle body bellcrank pin by pushing connector off bellcrank pin towards front of vehicle (Fig. 2). **DO NOT try to pull connector off perpendicular to the bellcrank pin. Connector will be broken.**

(7) Slide speed control cable plastic mount towards passenger side of vehicle to remove cable from bracket (Fig. 4).

(8) Remove servo cable from servo. Refer to Speed Control Servo Removal/Installation.

INSTALLATION - 4.0L

(1) Install end of cable to speed control servo. Refer to Speed Control Servo Removal/Installation.

(2) Install cable into mounting bracket (snaps in).

(3) Install speed control cable connector at throttle body bellcrank pin (snaps on).

(4) Connect negative battery cable at battery.

(5) Before starting engine, operate accelerator pedal to check for any binding.

INSTALLATION - 4.7L

(1) Install end of cable to speed control servo. Refer to Speed Control Servo Removal/Installation.

(2) Slide speed control cable plastic mount into bracket.

(3) Install speed control cable connector onto throttle body bellcrank pin (snaps on).

CABLE (Continued)

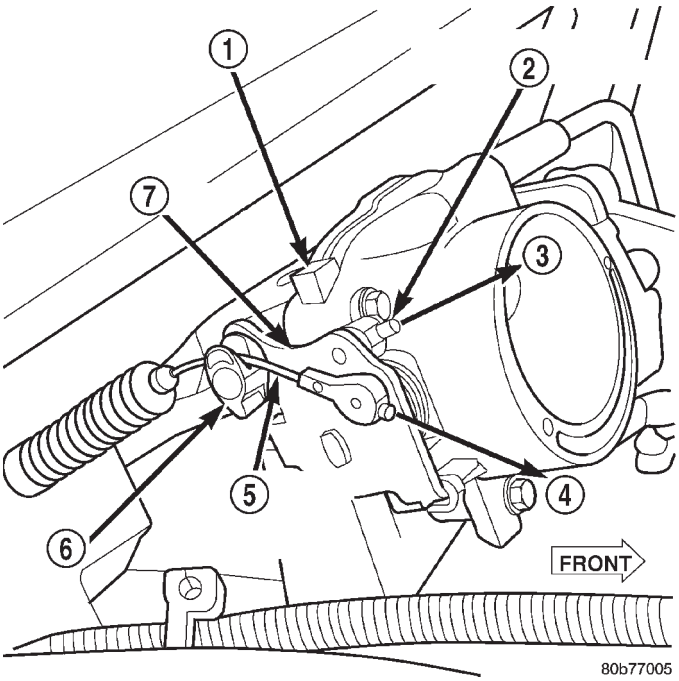

Fig. 2 Cable Connectors at Bell Crank—4.7L V-8 Engine

1 - THROTTLE BODY
2 - SPEED CONTROL CABLE CONNECTOR
3 - OFF
4 - OFF
5 - ACCELERATOR CABLE CONNECTOR
6 - CABLE CAM
7 - BELLCRANK

(4) Slide accelerator cable plastic mount into bracket. Continue sliding until tab (Fig. 3) is aligned to hole in mounting bracket.

(5) Route accelerator cable over top of cable cam (Fig. 2).

(6) Install accelerator cable connector onto throttle body bellcrank pin (snaps on).

(7) Install air box housing to throttle body.

(8) Connect negative battery cable at battery.

(9) Before starting engine, operate accelerator pedal to check for any binding.

SERVO

DESCRIPTION

The servo unit consists of a solenoid valve body, and a vacuum chamber. The solenoid valve body contains three solenoids:

- Vacuum
- Vent
- Dump

The vacuum chamber contains a diaphragm with a cable attached to control the throttle linkage.

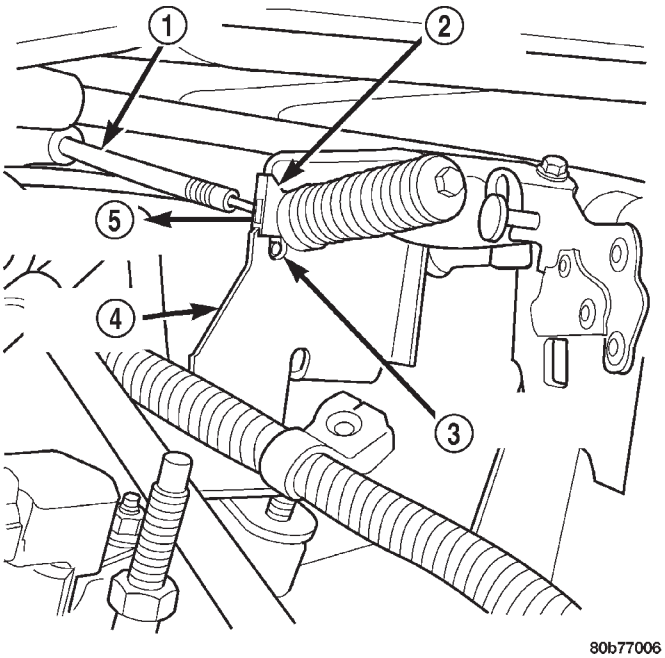

Fig. 3 Accelerator Cable Release Tab—4.7L V-8 Engine

1 - ACCELERATOR CABLE
2 - PLASTIC CABLE MOUNT
3 - PRESS TAB FOR REMOVAL
4 - CABLE BRACKET
5 - SLIDE FOR REMOVAL

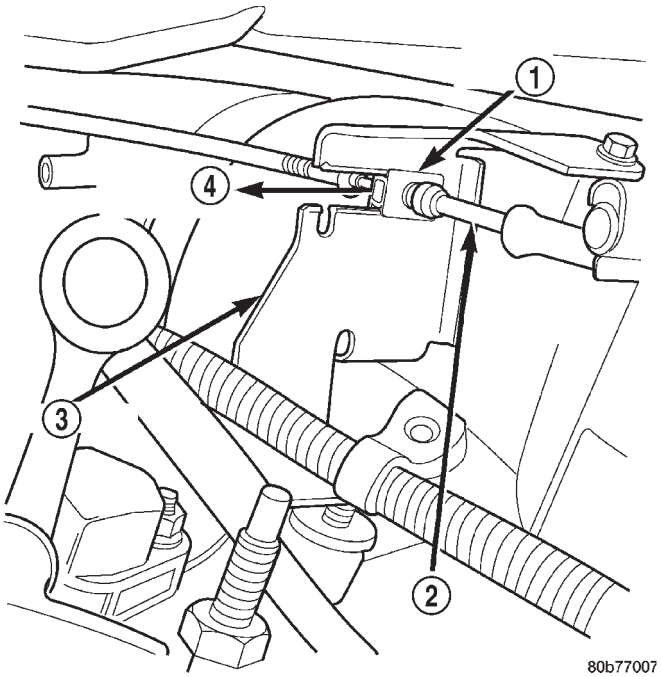

Fig. 4 Speed Control Cable at Bracket—4.7L V-8 Engine

1 - PLASTIC CABLE MOUNT
2 - SPEED CONTROL CABLE
3 - BRACKET
4 - SLIDE FOR REMOVAL

SERVO (Continued)

OPERATION

The Powertrain Control Module (PCM) controls the solenoid valve body. The solenoid valve body controls the application and release of vacuum to the diaphragm of the vacuum servo. The servo unit cannot be repaired and is serviced only as a complete assembly.

Power is supplied to the servo's by the PCM through the brake switch. The PCM controls the ground path for the vacuum and vent solenoids.

The dump solenoid is energized anytime it receives power. If power to the dump solenoid is interrupted, the solenoid dumps vacuum in the servo. This provides a safety backup to the vent and vacuum solenoids.

The vacuum and vent solenoids must be grounded at the PCM to operate. When the PCM grounds the vacuum servo solenoid, the solenoid allows vacuum to enter the servo and pull open the throttle plate using the cable. When the PCM breaks the ground, the solenoid closes and no more vacuum is allowed to enter the servo. The PCM also operates the vent solenoid via ground. The vent solenoid opens and closes a passage to bleed or hold vacuum in the servo as required.

The PCM duty cycles the vacuum and vent solenoids to maintain the set speed, or to accelerate and decelerate the vehicle. To increase throttle opening, the PCM grounds the vacuum and vent solenoids. To decrease throttle opening, the PCM removes the grounds from the vacuum and vent solenoids. When the brake is released, if vehicle speed exceeds 30 mph to resume, 35 mph to set, and the RES/ACCEL switch has been depressed, ground for the vent and vacuum circuits is restored.

REMOVAL

The speed control servo is attached to a bracket. The bracket and servo assembly are located below the battery tray.

(1) Disconnect negative battery cable at battery.

(2) Disconnect positive battery cable at battery.

(3) Remove air cleaner housing at top of throttle body and disconnect servo cable at throttle body. Refer to Servo Cable Removal/Installation.

(4) Remove battery from battery tray.

(5) Disconnect wiring at battery tray.

(6) Disconnect positive battery cable at Power Distribution Center (PDC).

(7) Loosen PDC at battery tray.

(8) Remove 4 battery tray bolts. One of these bolts attaches to speed control bracket flange that supports battery tray. While removing battery tray, disconnect battery temperature sensor electrical connector at sensor.

(9) Disconnect vacuum line at servo vacuum hose fitting (Fig. 5) .

(10) Disconnect electrical connector at servo (Fig. 5) .

If servo and mounting bracket are being removed as one assembly, remove two mounting nuts (Fig. 5) . These are located above right-front tire. Remove inner fender clips and pry inner fender back slightly to gain access to mounting nuts.

(11) If servo is being removed from its mounting bracket, remove 2 mounting nuts holding servo cable sleeve to bracket (Fig. 6) .

(12) Pull speed control cable sleeve and servo away from servo mounting bracket to expose cable retaining clip (Fig. 6) and remove clip. Note: The servo mounting bracket displayed in (Fig. 6) is a typical bracket and may/may not be applicable to this model vehicle.

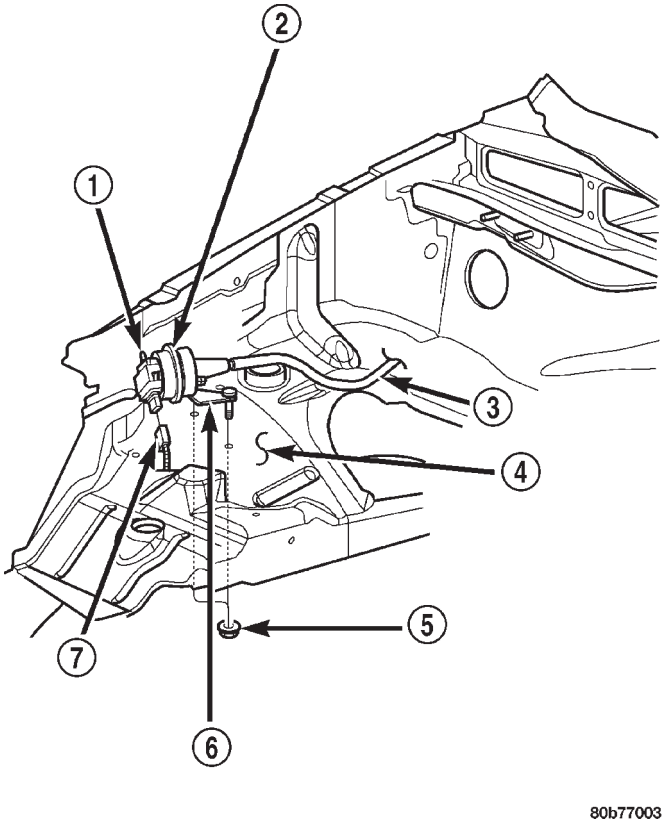

Fig. 5 Speed Control

1 - VACUUM HOSE FITTING
2 - SPEED CONTROL SERVO
3 - SERVO CABLE
4 - RIGHT INNER FENDER
5 - SERVO MOUNTING NUTS (2)
6 - SERVO MOUNTING BRACKET
7 - ELEC. CONNECTOR

(13) Remove servo from mounting bracket or, remove servo and mounting bracket as one assembly.

SERVO (Continued)

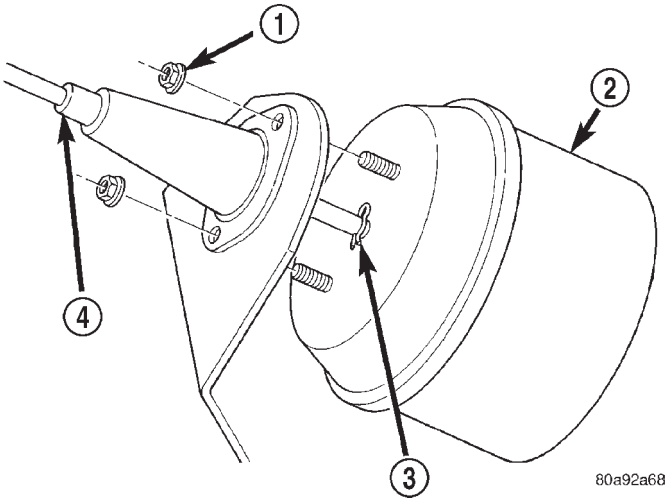

Fig. 6 Servo Cable Clip Remove/Install—Typical

1 - SERVO MOUNTING NUTS (2)
2 - SERVO
3 - CABLE RETAINING CLIP
4 - SERVO CABLE AND SLEEVE

INSTALLATION

(1) Position servo to mounting bracket.

(2) Align hole in cable connector with hole in servo pin. Install cable-to-servo retaining clip.

(3) Insert servo mounting studs through holes in servo mounting bracket.

(4) Install servo cable mounting nuts (Fig. 6) and tighten to 8.5 N·m (75 in. lbs.) torque. If servo and bracket is being installed as one assembly, install 2 mounting nuts (Fig. 5) and tighten to 28 N·m ±6 N·m (250 in. lbs. ±50 in. lbs.) torque.

(5) Connect vacuum line at servo.

(6) Connect electrical connector at servo.

(7) Connect servo cable to throttle body. Refer to Servo Cable Removal/Installation.

(8) Install battery tray and battery temperature sensor.

(9) Connect wiring to battery tray.

(10) Install battery to battery tray.

(11) Connect positive battery cable to Power Distribution Center (PDC).

(12) Connect positive battery cable to battery.

(13) Connect negative battery cable to battery.

(14) Before starting engine, operate accelerator pedal to check for any binding.

SWITCH

DESCRIPTION

There are two separate switch pods that operate the speed control system. The steering-wheel-mounted switches use multiplexed circuits to provide inputs to the PCM for ON, OFF, RESUME, ACCELERATE, SET, DECEL and CANCEL modes. Refer to the owner's manual for more information on speed control switch functions and setting procedures.

The individual switches cannot be repaired. If one switch fails, the entire switch module must be replaced.

OPERATION

When speed control is selected by depressing the ON, OFF switch, the PCM allows a set speed to be stored in its RAM for speed control. To store a set speed, depress the SET switch while the vehicle is moving at a speed between approximately 35 and 85 mph. In order for the speed control to engage, the brakes cannot be applied, nor can the gear selector be indicating the transmission is in Park or Neutral.

The speed control can be disengaged manually by:

- Stepping on the brake pedal
- Depressing the OFF switch
- Depressing the CANCEL switch.

The speed control can be disengaged also by any of the following conditions:

- An indication of Park or Neutral
- The VSS signal increases at a rate of 10 mph per second (indicates that the co-efficient of friction between the road surface and tires is extremely low)
- Depressing the clutch pedal.
- Excessive engine rpm (indicates that the transmission may be in a low gear)
- The VSS signal decreases at a rate of 10 mph per second (indicates that the vehicle may have decelerated at an extremely high rate)
- If the actual speed is not within 20 mph of the set speed

The previous disengagement conditions are programmed for added safety.

Once the speed control has been disengaged, depressing the ACCEL switch restores the vehicle to the target speed that was stored in the PCM's RAM.

NOTE: Depressing the OFF switch will erase the set speed stored in the PCM's RAM.

SWITCH (Continued)

If, while the speed control is engaged, the driver wishes to increase vehicle speed, the PCM is programmed for an acceleration feature. With the ACCEL switch held closed, the vehicle accelerates slowly to the desired speed. The new target speed is stored in the PCM's RAM when the ACCEL switch is released. The PCM also has a ″tap-up″ feature in which vehicle speed increases at a rate of approximately 2 mph for each momentary switch activation of the ACCEL switch.

The PCM also provides a means to decelerate without disengaging speed control. To decelerate from an existing recorded target speed, depress and hold the COAST switch until the desired speed is reached. Then release the switch. The ON, OFF switch operates two components: the PCM's ON, OFF input, and the battery voltage to the brake switch, which powers the speed control servo.

Multiplexing

The PCM sends out 5 volts through a fixed resistor and monitors the voltage change between the fixed resistor and the switches. If none of the switches are depressed, the PCM will measure 5 volts at the sensor point (open circuit). If a switch with no resistor is closed, the PCM will measure 0 volts (grounded circuit). Now, if a resistor is added to a switch, then the PCM will measure some voltage proportional to the size of the resistor. By adding a different resistor to each switch, the PCM will see a different voltage depending on which switch is pushed.

Another resistor has been added to the 'at rest circuit' causing the PCM to never see 5 volts. This was done for diagnostic purposes. If the switch circuit should open (bad connection), then the PCM will see the 5 volts and know the circuit is bad. The PCM will then set an open circuit fault.

REMOVAL

WARNING: BEFORE BEGINNING ANY AIRBAG SYSTEM COMPONENT REMOVAL OR INSTALLATION, REMOVE AND ISOLATE THE NEGATIVE (-) CABLE FROM THE BATTERY. THIS IS THE ONLY SURE WAY TO DISABLE THE AIRBAG SYSTEM. THEN WAIT TWO MINUTES FOR SYSTEM CAPACITOR TO DISCHARGE BEFORE FURTHER SYSTEM SERVICE. FAILURE TO DO THIS COULD RESULT IN ACCIDENTAL AIRBAG DEPLOYMENT AND POSSIBLE INJURY.

(1) Disconnect and isolate negative battery cable.
(2) Remove airbag module. Refer to Group 8M, Passive Restraint Systems.
(3) Remove electrical connector at switch.
(4) Remove switch-to-steering wheel mounting screw (Fig. 7) .
(5) Remove switch.

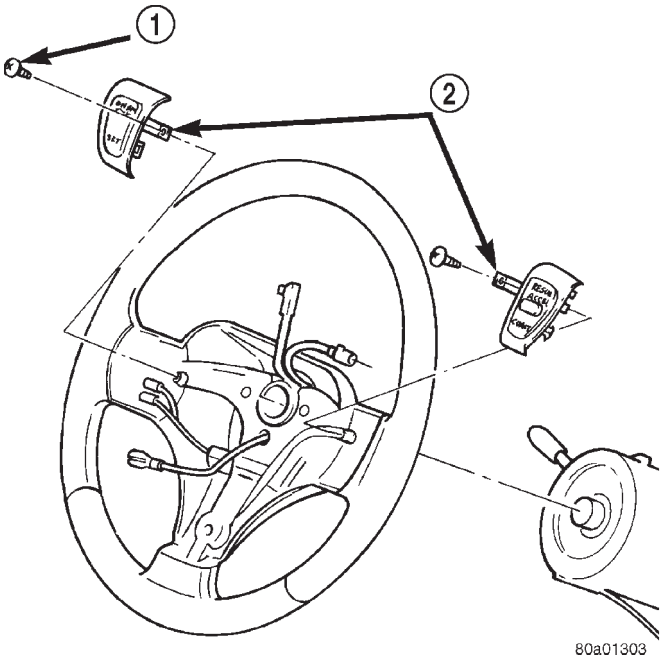

Fig. 7 Speed Control Switches

1 - MOUNTING SCREW
2 - SPEED CONTROL SWITCHES

INSTALLATION

(1) Install switch and mounting screw.
(2) Tighten screw to 1.5 N·m (15 in. lbs.) torque.
(3) Install electrical connector to switch.
(4) Install airbag module. Refer to Group 8M, Passive Restraint Systems.
(5) Connect negative battery cable.

VACUUM RESERVOIR

DESCRIPTION

The vacuum reservoir is a plastic storage tank connected to an engine vacuum source by vacuum lines.

OPERATION

The vacuum reservoir is used to supply the vacuum needed to maintain proper speed control operation when engine vacuum drops, such as in climbing a grade while driving. A one-way check valve is used in the vacuum line between the reservoir and the vacuum source. This check valve is used to trap engine vacuum in the reservoir. On certain vehicle applications, this reservoir is shared with the heating/air-conditioning system. The vacuum reservoir cannot be repaired and must be replaced if faulty.

VACUUM RESERVOIR (Continued)

DIAGNOSIS AND TESTING - VACUUM SUPPLY TEST

(1) Disconnect vacuum hose at speed control servo and install a vacuum gauge into the disconnected hose.

(2) Start engine and observe gauge at idle. Vacuum gauge should read at least ten inches of mercury.

(3) If vacuum is less than ten inches of mercury, determine source of leak. Check vacuum line to engine for leaks. Also check actual engine intake manifold vacuum. If manifold vacuum does not meet this requirement, check for poor engine performance and repair as necessary.

(4) If vacuum line to engine is not leaking, check for leak at vacuum reservoir. To locate and gain access to reservoir, refer to Vacuum Reservoir Removal/Installation in this group. Disconnect vacuum line at reservoir and connect a hand-operated vacuum pump to reservoir fitting. Apply vacuum. Reservoir vacuum should not bleed off. If vacuum is being lost, replace reservoir.

(5) Verify operation of one-way check valve and check it for leaks.

(a) Locate one-way check valve. The valve is located in vacuum line between vacuum reservoir and engine vacuum source. Disconnect vacuum hoses (lines) at each end of valve.

(b) Connect a hand-operated vacuum pump to reservoir end of check valve. Apply vacuum. Vacuum should not bleed off. If vacuum is being lost, replace one-way check valve.

(c) Connect a hand-operated vacuum pump to vacuum source end of check valve. Apply vacuum. Vacuum should flow through valve. If vacuum is not flowing, replace one-way check valve. Seal the fitting at opposite end of valve with a finger and apply vacuum. If vacuum will not hold, diaphragm within check valve has ruptured. Replace valve.

REMOVAL

The vacuum reservoir is located in the right/front corner of the vehicle behind the front bumper fascia (Fig. 8).

(1) Remove front bumper and grill assembly.

(2) Remove 1 support bolt near front of reservoir (Fig. 8).

(3) Remove 2 reservoir mounting bolts.

(4) Remove reservoir from vehicle to gain access to vacuum hose (Fig. 9). Disconnect vacuum hose from reservoir fitting at rear of reservoir.

INSTALLATION

The vacuum reservoir is located in the right/front corner of the vehicle behind the front bumper fascia (Fig. 8).

(1) Connect vacuum hose to reservoir.

(2) Install reservoir and tighten 2 bolts to 3 N·m (25 in. lbs.) torque.

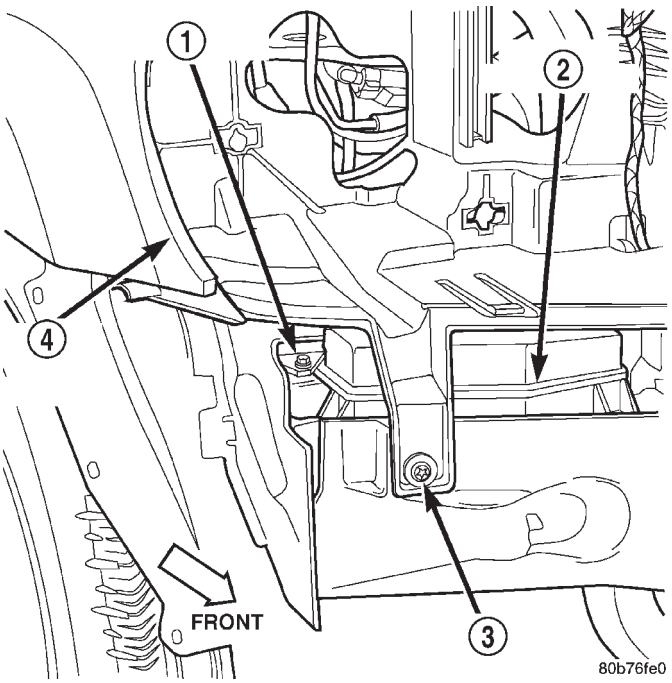

Fig. 8 Vacuum Reservoir Location

1 - RADIATOR FAN RELAY
2 - VACUUM RESERVOIR
3 - BOLT
4 - RIGHT FRONT FENDER

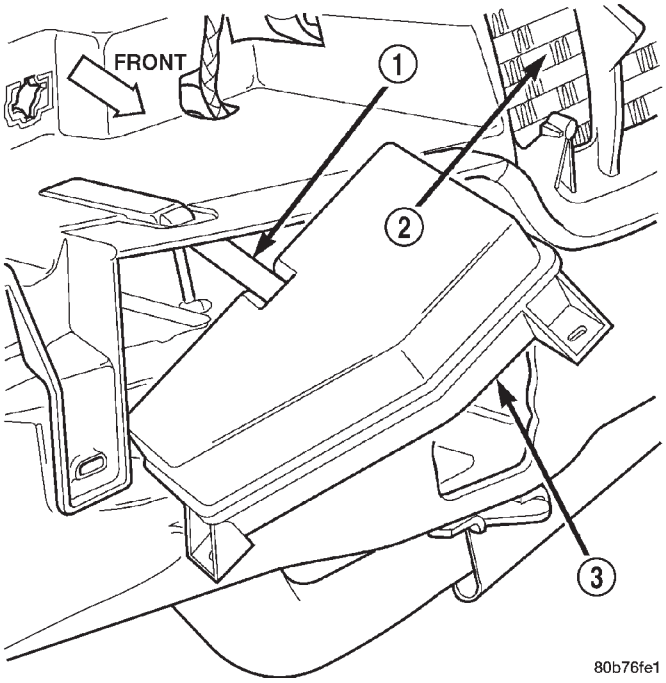

Fig. 9 Vacuum Reservoir Removal/Installation

1 - VACUUM HOSE
2 - RADIATOR
3 - VACUUM RESERVOIR

(3) Install front bumper and grill assembly.

VEHICLE THEFT SECURITY

TABLE OF CONTENTS

	page
VEHICLE THEFT SECURITY	
DESCRIPTION	1
OPERATION	3
DIAGNOSIS AND TESTING	4
VEHICLE THEFT SECURITY SYSTEM	4
SENTRY KEY IMMOBILIZER SYSTEM	5
STANDARD PROCEDURE	7
SKIS INITIALIZATION	7
SENTRY KEY TRANSPONDER PROGRAMMING	7
HOOD AJAR SWITCH	
DESCRIPTION	8
OPERATION	9
DIAGNOSIS AND TESTING	9
HOOD AJAR SWITCH	9
REMOVAL	9
INSTALLATION	10
SKIS INDICATOR LAMP	
DESCRIPTION	11
OPERATION	11
TRANSPONDER KEY	
DESCRIPTION	11
OPERATION	12
VTSS INDICATOR	
DESCRIPTION	12
OPERATION	13
DIAGNOSIS AND TESTING	13
VTSS INDICATOR	13

VEHICLE THEFT SECURITY

DESCRIPTION - VEHICLE THEFT SECURITY SYSTEM

The Vehicle Theft Security System (VTSS) is an available factory-installed option on this model. The VTSS is designed to provide perimeter protection against unauthorized vehicle use or tampering by monitoring the vehicle doors, the liftgate, the liftgate flip-up glass, the ignition system and, only on vehicles built for sale in certain international markets where it is required equipment, the hood. If unauthorized vehicle use or tampering is detected, the system responds by pulsing the horn and flashing the exterior lamps. In many markets the VTSS also includes the Sentry Key Immobilizer System (SKIS), which provides passive vehicle protection by preventing the engine from operating unless a valid electronically encoded key is detected in the ignition lock cylinder. (Refer to 8 - ELECTRICAL/VEHICLE THEFT SECURITY - DESCRIPTION - SENTRY KEY IMMOBILIZER SYSTEM).

The VTSS includes the following major components, which are described in further detail elsewhere in this service manual:

- **Body Control Module** - The Body Control Module (BCM) is located on the Junction Block (JB) underneath the driver side end of the instrument panel. The BCM contains integrated circuitry, a central processing unit and the programming necessary to provide all of the proper VTSS features and outputs based upon the monitored inputs. The BCM circuitry monitors hard wired switch inputs, as well as message inputs received from other vehicle electronic modules over the Programmable Communications Interface (PCI) data bus network. (Refer to 8 - ELECTRICAL/ELECTRONIC CONTROL MODULES/BODY CONTROL/CENTRAL TIMER MODULE - DESCRIPTION).
- **Combination Flasher** - The electronic combination flasher is located in the Junction Block (JB) underneath the driver side end of the instrument panel. The combination flasher is normally activated by the turn signal and hazard warning switches to control the flashing of the turn signal and hazard warning lamps. However, it can also be activated by an output of the Body Control Module (BCM) to provide a highly visible indication that unauthorized vehicle use or tampering has been detected. (Refer to 8 - ELECTRICAL/LAMPS/LIGHTING - EXTERIOR/COMBINATION FLASHER - DESCRIPTION).
- **Door Ajar Switch** - A door ajar switch is integral to the latch of each door in the vehicle. These switches provide an input to the VTSS indicating whether each door is opened or closed. (Refer to 8 - ELECTRICAL/LAMPS/LIGHTING - INTERIOR/DOOR AJAR SWITCH - DESCRIPTION - DOOR AJAR SWITCH).
- **Driver Cylinder Lock Switch** - A driver cylinder lock switch is integral to the door lock cylinder of the driver side front door. This switch provides an input to the VTSS indicating whether the system should remain armed or be disarmed. (Refer to 8 - ELECTRICAL/POWER LOCKS/DOOR CYLINDER LOCK/UNLOCK SWITCH - DESCRIPTION).
- **Hood Ajar Switch** - A hood ajar switch is located beneath the hood panel on the left fender

ledge in the engine compartment on vehicles built for sale in certain international markets where it is required equipment. This switch provides an input to the VTSS indicating whether the hood is opened or closed. (Refer to 8 - ELECTRICAL/VEHICLE THEFT SECURITY/HOOD AJAR SWITCH - DESCRIPTION).

- **Horn Relay** - The horn relay is located in the Power Distribution Center (PDC) in the engine compartment near the battery. The horn relay is normally activated by the horn switch to control the sounding of the vehicle horn or horns. However, it can also be activated by an output of the Body Control Module (BCM) to provide an audible indication that unauthorized vehicle use or tampering has been detected. (Refer to 8 - ELECTRICAL/HORN/HORN RELAY - DESCRIPTION).
- **Liftgate Ajar Switch** - A liftgate ajar switch is integral to each of the two liftgate latches, one on each side of the liftgate. These switches provide an input to the VTSS indicating whether the liftgate is opened or closed. (Refer to 8 - ELECTRICAL/LAMPS/LIGHTING - INTERIOR/DOOR AJAR SWITCH - DESCRIPTION - LIFTGATE AJAR SWITCH).
- **Liftgate Flip-Up Glass Ajar Switch** - A liftgate flip-up glass ajar switch is integral to the liftgate flip-up glass latch, near the center of the lower liftgate glass opening. This switch provides an input to the VTSS indicating whether the liftgate flip-up glass is opened or closed. (Refer to 8 - ELECTRICAL/LAMPS/LIGHTING - INTERIOR/DOOR AJAR SWITCH - DESCRIPTION - LIFTGATE FLIP-UP GLASS AJAR SWITCH).
- **Low Beam Headlamp Relay** - The low beam headlamp relay is located in the Junction Block (JB) underneath the driver side end of the instrument panel. The low beam headlamp relay is normally activated by the Body Control Module (BCM) based upon inputs from the headlamp and headlamp beam select switches to control the illumination of the headlamp low beams. However, it can also be activated by an output of the BCM to flash the headlamp low beams to provide a highly visible indication that unauthorized vehicle use or tampering has been detected.
- **VTSS Indicator** - A red Light Emitting Diode (LED) located on the top of the instrument panel near the windshield is illuminated by an output of the Body Control Module (BCM) to indicate the status of the VTSS. This LED shares the same mounting location and housing as the optional automatic headlamps photo diode ambient light sensor. (Refer to 8 - ELECTRICAL/VEHICLE THEFT SECURITY/VTSS INDICATOR - DESCRIPTION).

Certain functions and features of the VTSS rely upon resources shared with or controlled by other electronic modules in the vehicle over the Programmable Communications Interface (PCI) data bus network. The other electronic modules that may affect VTSS operation are:

- **Driver Door Module** - The Driver Door Module (DDM) is located on the back of the driver side front door trim panel. The DDM continually monitors hard wired inputs from the driver side front door ajar switch, the driver cylinder lock switch, and the driver side power lock switch. It then sends the proper switch state messages and lock/unlock request messages to the Body Control Module (BCM) over the Programmable Communications Interface (PCI) data bus. (Refer to 8 - ELECTRICAL/ELECTRONIC CONTROL MODULES/DOOR MODULE - DESCRIPTION).
- **Passenger Door Module** - The Passenger Door Module (PDM) is located on the back of the passenger side front door trim panel. The PDM continually monitors hard wired inputs from the passenger side front door ajar switch and the passenger side power lock switch. It then sends the proper switch state messages and lock/unlock request messages to the Body Control Module (BCM) over the Programmable Communications Interface (PCI) data bus. (Refer to 8 - ELECTRICAL/ELECTRONIC CONTROL MODULES/DOOR MODULE - DESCRIPTION).

Hard wired circuitry connects many of the VTSS components to each other through the electrical system of the vehicle. These hard wired circuits are integral to several wire harnesses, which are routed throughout the vehicle and retained by many different methods. These circuits may be connected to each other, to the vehicle electrical system and to the VTSS components through the use of a combination of soldered splices, splice block connectors, and many different types of wire harness terminal connectors and insulators. Refer to the appropriate wiring information. The wiring information includes wiring diagrams, proper wire and connector repair procedures, further details on wire harness routing and retention, as well as pin-out and location views for the various wire harness connectors, splices and grounds.

DESCRIPTION - SENTRY KEY IMMOBILIZER SYSTEM

The Sentry Key Immobilizer System (SKIS) is available as a factory-installed option on this model. Vehicles equipped with this option can be readily identified by the presence of an amber SKIS indicator in the instrument cluster that will illuminate for about three seconds each time the ignition switch is turned to the On position, or by a gray molded rubber cap on the head of the ignition key. Models not equipped with SKIS still have a SKIS indicator in the cluster, but it will not illuminate when the igni-

VEHICLE THEFT SECURITY (Continued)

tion switch is turned to the On position. Also, models not equipped with the SKIS have a black molded rubber cap on the head of the ignition key.

The SKIS includes the following major components, which are described in further detail elsewhere in this service manual:

- **Powertrain Control Module** - The Powertrain Control Module (PCM) is located on the right side of the dash panel in the engine compartment.
- **Sentry Key Immobilizer Module** - The Sentry Key Immobilizer Module (SKIM) is located on the underside of the steering column near the ignition lock cylinder housing and an integral molded plastic antenna ring circles the ignition lock cylinder like a halo. The SKIM and its antenna are concealed beneath the steering column shrouds.
- **Sentry Key Transponder** - The Sentry Key transponder is molded into the head of the ignition key, and concealed by a gray molded rubber cap.
- **SKIS Indicator** - The SKIS indicator is located on the right side of the instrument cluster, to the right of the engine oil pressure gauge.

Except for the Sentry Key transponders, which rely upon Radio Frequency (RF) communication, hard wired circuitry connects the SKIS components to the electrical system of the vehicle. These hard wired circuits are integral to several wire harnesses, which are routed throughout the vehicle and retained by many different methods. These circuits may be connected to each other, to the vehicle electrical system and to the SKIS components through the use of a combination of soldered splices, splice block connectors, and many different types of wire harness terminal connectors and insulators. Refer to the appropriate wiring information. The wiring information includes wiring diagrams, proper wire and connector repair procedures, further details on wire harness routing and retention, as well as pin-out and location views for the various wire harness connectors, splices and grounds.

OPERATION - VEHICLE THEFT SECURITY SYSTEM

A Body Control Module (BCM) is used on this model to control and integrate many of the electronic functions and features included in the Vehicle Theft Security System (VTSS). In the VTSS, the BCM receives inputs indicating the status of the door ajar switches, the driver cylinder lock switch, the ignition switch, the liftgate ajar switches, the liftgate flip-up glass ajar switch, the power lock switches and, in vehicles so equipped, the hood ajar switch. The programming in the BCM allows it to process the information from all of these inputs and send control outputs to energize or de-energize the combination flasher, the horn relay, the low beam headlamp relay, and the VTSS indicator. The control of these inputs and outputs are what constitute all of the features of the VTSS. Following is information on the operation of each of the VTSS features. Refer to the owner's manual in the vehicle glove box for more information on the features, use and operation of the VTSS.

ENABLING

The BCM must have the VTSS function electronically enabled in order for the VTSS to perform as designed. The logic in the BCM keeps its VTSS function dormant until it is enabled using a DRBIII® scan tool. The VTSS function of the BCM is enabled on vehicles equipped with the VTSS option at the factory, but a service replacement BCM must be VTSS-enabled by the dealer using a DRBIII® scan tool. Refer to the appropriate diagnostic information.

ARMING

Passive arming of the VTSS occurs when the vehicle is exited with the key removed from the ignition switch, the headlamps are turned off, and the doors are locked while they are open using the power lock switch. The power lock switch will not function if the key is in the ignition switch or the headlamps are turned on with the driver side front door open. The VTSS will not arm if the driver side front door is locked using the key in the lock cylinder or using the mechanical lock button. Active arming of the VTSS occurs when the “Lock” button on the Remote Keyless Entry (RKE) transmitter is depressed to lock the vehicle, even if the doors and/or the liftgate are open when the RKE transmitter Lock button is depressed. However, the VTSS arming will not be complete until all of the doors, the liftgate and the liftgate flip-up glass are closed. On vehicles equipped with the hood ajar switch, VTSS arming will complete if the hood is open, but the underhood area will not be protected unless the hood is closed when the VTSS is armed.

Following successful passive or active VTSS arming, the VTSS indicator on the top of the instrument panel will flash rapidly for about fifteen seconds after the illuminated entry system times out. This indicates that VTSS arming is in progress. Once the fifteen second arming function is successfully completed, the indicator will flash at a slower rate, indicating that the VTSS is armed.

DISARMING

Passive disarming of the VTSS occurs when the vehicle is unlocked using the key to unlock the driver side front door. Active disarming of the VTSS occurs when the vehicle is unlocked by depressing the “Unlock” button of the Remote Keyless Entry (RKE) transmitter. Once the alarm has been activated (horn pulsing and exterior lamps flashing), either disarming method will also deactivate the alarm. Depress-

ing the "Panic" button on the RKE transmitter will also disarm the VTSS, but the horn will continue to pulse and the exterior lamps will continue to flash for about three minutes as part of the Panic feature function. The Panic feature is overridden if the "Panic" button is depressed a second time, or if a vehicle speed of about 24 kilometers-per-hour (15 miles-per-hour) is attained.

POWER-UP MODE

When the armed VTSS senses that the battery has been disconnected and reconnected, it enters its power-up mode. In the power-up mode the alarm system remains armed following a battery failure or disconnect. If the VTSS was armed prior to a battery disconnect or failure, the technician or vehicle operator will have to actively or passively disarm the alarm system after the battery is reconnected. The power-up mode will also apply if the battery goes dead while the system is armed, and battery jump-starting is then attempted. The VTSS will be armed until the technician or vehicle operator has actively or passively disarmed the alarm system. If the VTSS is in the disarmed mode prior to a battery disconnect or failure, it will remain disarmed after the battery is reconnected or replaced, or if jump-starting is attempted.

TAMPER ALERT

The VTSS tamper alert feature will sound the horn three times upon VTSS disarming, if the alarm was triggered and has since timed-out (about eighteen minutes). This feature alerts the vehicle operator that the VTSS alarm was activated while the vehicle was unattended.

OPERATION - SENTRY KEY IMMOBILIZER SYSTEM

The Sentry Key Immobilizer System (SKIS) is designed to provide passive protection against unauthorized vehicle use by disabling the engine, after about two seconds of running, whenever any method other than a valid Sentry Key is used to start the vehicle. The SKIS is considered a passive protection system because it is always active when the ignition system is energized and does not require any customer intervention. The SKIS uses Radio Frequency (RF) communication to obtain confirmation that the key in the ignition switch is a valid key for operating the vehicle. The microprocessor-based SKIS hardware and software also uses electronic messages to communicate with other electronic modules in the vehicle over the Programmable Communications Interface (PCI) data bus. (Refer to 8 - ELECTRICAL/ELECTRONIC CONTROL MODULES/COMMUNICATION - OPERATION).

Pre-programmed Sentry Key transponders are provided with the vehicle from the factory. Each Sentry Key Immobilizer Module (SKIM) will recognize a maximum of eight Sentry Keys. If the customer would like additional keys other than those provided with the vehicle, they may be purchased from any authorized dealer. These additional keys must be programmed to the SKIM in the vehicle in order for the system to recognize them as valid keys. This can be done by the dealer using a DRBIII® scan tool or, if Customer Learn programming is an available SKIS feature in the market where the vehicle was purchased, the customer can program the additional keys, as long as at least two valid Sentry Keys are already available. (Refer to 8 - ELECTRICAL/VEHICLE THEFT SECURITY - STANDARD PROCEDURE - TRANSPONDER PROGRAMMING).

The SKIS performs a self-test each time the ignition switch is turned to the On position, and will store fault information in the form of Diagnostic Trouble Codes (DTC's) if a system malfunction is detected. The SKIS can be diagnosed, and any stored DTC's can be retrieved using a DRBIII® scan tool. Refer to the appropriate diagnostic information.

DIAGNOSIS AND TESTING - VEHICLE THEFT SECURITY SYSTEM

The VTSS-related hard wired inputs to and outputs from the Body Control Module (BCM), the Driver Door Module (DDM), or the Passenger Door Module (PDM) may be diagnosed and tested using conventional diagnostic tools and procedures. Refer to the appropriate wiring information. The wiring information includes wiring diagrams, proper wire and connector repair procedures, further details on wire harness routing and retention, as well as pinout and location views for the various wire harness connectors, splices and grounds.

However, conventional diagnostic methods may not prove conclusive in the diagnosis of the BCM, the DDM, the PDM, or the Programmable Communications Interface (PCI) data bus network. In order to obtain conclusive testing of the VTSS, the BCM, the DDM, the PDM, and the PCI data bus network must also be checked. The most reliable, efficient, and accurate means to diagnose the VTSS requires the use of a DRBIII® scan tool and the appropriate diagnostic information. The DRBIII® scan tool can provide confirmation that the PCI data bus network is functional, that all of the electronic modules are sending and receiving the proper messages over the PCI data bus, and that these modules are receiving the proper hard wired inputs and responding with the proper hard wired outputs needed to perform their many functions. See the "Vehicle Theft Security System" menu item on the DRBIII® scan tool.

VEHICLE THEFT SECURITY (Continued)

WARNING: ON VEHICLES EQUIPPED WITH AIRBAGS, DISABLE THE AIRBAG SYSTEM BEFORE ATTEMPTING ANY STEERING WHEEL, STEERING COLUMN, OR INSTRUMENT PANEL COMPONENT DIAGNOSIS OR SERVICE. DISCONNECT AND ISOLATE THE BATTERY NEGATIVE (GROUND) CABLE, THEN WAIT TWO MINUTES FOR THE AIRBAG SYSTEM CAPACITOR TO DISCHARGE BEFORE PERFORMING FURTHER DIAGNOSIS OR SERVICE. THIS IS THE ONLY SURE WAY TO DISABLE THE AIRBAG SYSTEM. FAILURE TO TAKE THE PROPER PRECAUTIONS COULD RESULT IN ACCIDENTAL AIRBAG DEPLOYMENT AND POSSIBLE PERSONAL INJURY.

DIAGNOSIS AND TESTING - SENTRY KEY IMMOBILIZER SYSTEM

WARNING: ON VEHICLES EQUIPPED WITH AIRBAGS, DISABLE THE AIRBAG SYSTEM BEFORE ATTEMPTING ANY STEERING WHEEL, STEERING COLUMN, OR INSTRUMENT PANEL COMPONENT DIAGNOSIS OR SERVICE. DISCONNECT AND ISOLATE THE BATTERY NEGATIVE (GROUND) CABLE, THEN WAIT TWO MINUTES FOR THE AIRBAG SYSTEM CAPACITOR TO DISCHARGE BEFORE PERFORMING FURTHER DIAGNOSIS OR SERVICE. THIS IS THE ONLY SURE WAY TO DISABLE THE AIRBAG SYSTEM. FAILURE TO TAKE THE PROPER PRECAUTIONS COULD RESULT IN ACCIDENTAL AIRBAG DEPLOYMENT AND POSSIBLE PERSONAL INJURY.

SENTRY KEY IMMOBILIZER SYSTEM DIAGNOSIS		
CONDITION	POSSIBLE CAUSES	CORRECTION
SKIS INDICATOR FAILS TO LIGHT DURING BULB TEST	1. Bulb faulty.	1. Perform the instrument cluster actuator test. (Refer to 8 - ELECTRICAL/INSTRUMENT CLUSTER - DIAGNOSIS AND TESTING - ACTUATOR TEST). Replace the faulty bulb, if required.
	2. Fuse faulty.	2. Check the SKIM fused B(+) fuse and the fused ignition switch output (st-run) fuse in the JB. Replace fuses, if required.
	3. Ground path faulty.	3. Check for continuity to ground at the connector for the SKIM. Repair wiring, if required.
	4. Battery feed faulty.	4. Check for battery current at the connector for the SKIM. Repair wiring, if required.
	5. Ignition feed faulty.	5. Check for battery current at the connector for the SKIM with the ignition switch in the On position. Repair wiring, if required.
SKIS INDICATOR FLASHES FOLLOWING BULB TEST	1. Invalid key in ignition switch lock cylinder.	1. Replace the key with a known valid key.
	2. Key-related fault.	2. Use a DRBIII® scan tool and the appropriate diagnostic information for further diagnosis.
SKIS INDICATOR LIGHTS SOLID FOLLOWING BULB TEST	1. SKIS system malfunction/ fault detected.	1. Use a DRBIII® scan tool and the appropriate diagnostic information for further diagnosis.
	2. SKIS system inoperative.	2. Use a DRBIII® scan tool and the appropriate diagnostic information for further diagnosis.

VEHICLE THEFT SECURITY (Continued)

SKIS INDICATOR FAILS TO LIGHT DURING BULB TEST

If the Sentry Key Immobilizer System (SKIS) indicator in the instrument cluster fails to illuminate for about three seconds after the ignition switch is turned to the On position (bulb test), perform the instrument cluster actuator test. (Refer to 8 - ELECTRICAL/INSTRUMENT CLUSTER - DIAGNOSIS AND TESTING - ACTUATOR TEST). If the bulb fails to operate during the actuator test, replace the bulb with a known good unit. If the SKIS indicator still fails to light during the bulb test, a wiring problem resulting in the loss of battery current or ground to the Sentry Key Immobilizer Module (SKIM) should be suspected, and the following procedure should be used for diagnosis. Refer to the appropriate wiring information. The wiring information includes wiring diagrams, proper wire and connector repair procedures, details of wire harness routing and retention, connector pin-out information and location views for the various wire harness connectors, splices and grounds.

NOTE: The following tests may not prove conclusive in the diagnosis of this system. The most reliable, efficient, and accurate means to diagnose the Sentry Key Immobilizer System requires the use of a DRBIII® scan tool. Refer to the appropriate diagnostic information.

(1) Check the fused B(+) fuse (Fuse 7 - 10 ampere) in the Junction Block (JB). If OK, go to Step 2. If not OK, repair the shorted circuit or component as required and replace the faulty fuse.

(2) Check for battery voltage at the fused B(+) fuse (Fuse 7 - 10 ampere) in the JB. If OK, go to Step 3. If not OK, repair the open B(+) circuit between the JB fuse and the Power Distribution Center (PDC) as required.

(3) Check the fused ignition switch output (st-run) fuse (Fuse 22 - 10 ampere) in the JB. If OK, go to Step 4. If not OK, repair the shorted circuit or component as required and replace the faulty fuse.

(4) Turn the ignition switch to the On position. Check for battery voltage at the fused ignition switch output (st-run) fuse (Fuse 22 - 10 ampere) in the JB. If OK, go to Step 5. If not OK, repair the open fused ignition switch output (st-run) circuit between the JB fuse and the ignition switch as required.

(5) Disconnect and isolate the battery negative cable. Disconnect the instrument panel wire harness connector for the Sentry Key Immobilizer Module (SKIM) from the SKIM connector receptacle. Check for continuity between the ground circuit cavity of the instrument panel wire harness connector for the SKIM and a good ground. There should be continuity. If OK, go to Step 6. If not OK, repair the open ground circuit to ground (G200) as required.

(6) Reconnect the battery negative cable. Check for battery voltage at the fused B(+) circuit cavity of the instrument panel wire harness connector for the SKIM. If OK, go to Step 7. If not OK, repair the open fused B(+) circuit between the SKIM and the JB fuse as required.

(7) Turn the ignition switch to the On position. Check for battery voltage at the fused ignition switch output (st-run) circuit cavity of the instrument panel wire harness connector for the SKIM. If OK, refer to the appropriate diagnostic information and use a DRBIII® scan tool to complete the diagnosis of the SKIS. If not OK, repair the open fused ignition switch output (st-run) circuit between the SKIM and the JB fuse as required.

SKIS INDICATOR FLASHES OR LIGHTS SOLID FOLLOWING BULB TEST

A SKIS indicator that flashes following a successful bulb test indicates that an invalid key has been detected, or that a key-related fault has been set. A SKIS indicator that lights solid following a successful bulb test indicates that the SKIM has detected a system malfunction or that the SKIS is inoperative. In either case, fault information will be stored in the SKIM memory. For retrieval of this fault information and further diagnosis of the SKIS, the PCI data bus, the SKIM message outputs to the instrument cluster that control the SKIS indicator, the SKIM message outputs to the Body Control Module (BCM) that control chime service, or the message inputs and outputs between the SKIM and the Powertrain Control Module (PCM) that control engine operation, a DRBIII® scan tool and the appropriate diagnostic information are required. Following are preliminary troubleshooting guidelines to be followed during diagnosis using a DRBIII® scan tool:

(1) Using the DRBIII® scan tool, read and record the faults as they exist in the SKIM when you first begin your diagnosis of the vehicle. It is important to document these faults because the SKIM does not differentiate between historical faults (those that have occurred in the past) and active faults (those that are currently present). If this problem turns out to be an intermittent condition, this information may become invaluable to your diagnosis.

(2) Using the DRBIII® scan tool, erase all of the faults from the SKIM.

(3) Cycle the ignition switch to the Off position, then back to the On position.

(4) Using the DRBIII® scan tool, read any faults that are now present in the SKIM. These are the active faults.

(5) Using this active fault information, refer to the proper procedure in the appropriate diagnostic information for the additional specific diagnostic steps.

VEHICLE THEFT SECURITY (Continued)

STANDARD PROCEDURES - SKIS INITIALIZATION

The Sentry Key Immobilizer System (SKIS) must be initialized following a Sentry Key Immobilizer Module (SKIM) replacement. SKIS initialization requires the use of a DRBIII® scan tool. Initialization will also require that you have access to the unique four-digit PIN code that was assigned to the original SKIM. The PIN code **must** be used to enter the Secured Access Mode in the SKIM. This PIN number may be obtained from the vehicle owner, from the original vehicle invoice, or from the DaimlerChrysler Customer Center. (Refer to 8 - ELECTRICAL/ELECTRONIC CONTROL MODULES - STANDARD PROCEDURE - PCM/SKIM PROGRAMMING).

NOTE: If a Powertrain Control Module (PCM) is replaced on a vehicle equipped with the Sentry Key Immobilizer System (SKIS), the unique Secret Key data must be transferred from the Sentry Key Immobilizer Module (SKIM) to the new PCM using the PCM replacement procedure. This procedure also requires the use of a DRBIII® scan tool and the unique four-digit PIN code to enter the Secured Access Mode in the SKIM. Refer to the appropriate diagnostic information for the proper PCM replacement procedures.

STANDARD PROCEDURES - SENTRY KEY TRANSPONDER PROGRAMMING

All Sentry Keys included with the vehicle are preprogrammed to work with the Sentry Key Immobilizer System (SKIS) when it is shipped from the factory. The Sentry Key Immobilizer Module (SKIM) can be programmed to recognize up to a total of eight Sentry Keys. When programming a blank Sentry Key transponder, the key must first be cut to match the ignition switch lock cylinder in the vehicle for which it will be used. Once the additional or new key has been cut, the SKIM must be programmed to recognize it as a valid key. There are two possible methods to program the SKIM to recognize a new or additional valid key, the Secured Access Method and the Customer Learn Method. Following are the details of these two programming methods.

SECURED ACCESS METHOD

The Secured Access method applies to all vehicles. This method requires the use of a DRBIII® scan tool. This method will also require that you have access to the unique four-digit PIN code that was assigned to the original SKIM. The PIN code **must** be used to enter the Secured Access Mode in the SKIM. This PIN number may be obtained from the vehicle owner, from the original vehicle invoice, or from the DaimlerChrysler Customer Center. Refer to the appropriate diagnostic information for the proper Secured Access method programming procedures.

CUSTOMER LEARN METHOD

The Customer Learn feature is only available on domestic vehicles, or those vehicles which have a U.S. country code designator. This programming method also requires access to at least two valid Sentry Keys. If two valid Sentry Keys are not available, or if the vehicle does not have a U.S. country code designator, the Secured Access Method **must** be used to program new or additional valid keys to the SKIM. The Customer Learn programming method procedures are as follows:

(1) Obtain the blank Sentry Key(s) that are to be programmed as valid keys for the vehicle. Cut the blank key(s) to match the ignition switch lock cylinder mechanical key codes.

(2) Insert one of the two valid Sentry Keys into the ignition switch and turn the ignition switch to the On position.

(3) After the ignition switch has been in the On position for longer than three seconds, but no more than fifteen seconds, cycle the ignition switch back to the Off position. Replace the first valid Sentry Key in the ignition switch lock cylinder with the second valid Sentry Key and turn the ignition switch back to the On position. The second valid Sentry Key must be inserted in the lock cylinder within fifteen seconds of removing the first valid key.

(4) About ten seconds after the completion of Step 3, the SKIS indicator in the instrument cluster will start to flash and a single audible chime tone will sound to indicate that the system has entered the Customer Learn programming mode.

(5) Within sixty seconds of entering the Customer Learn programming mode, turn the ignition switch to the Off position, replace the valid Sentry Key with a blank Sentry Key transponder, and turn the ignition switch back to the On position.

(6) About ten seconds after the completion of Step 5, a single audible chime tone will sound and the SKIS indicator will stop flashing, stay on solid for three seconds, then turn off to indicate that the blank Sentry Key has been successfully programmed. The SKIS will immediately exit the Customer Learn programming mode and the vehicle may now be started using the newly programmed valid Sentry Key.

Each of these steps must be repeated and completed in their entirety for each additional Sentry Key that is to be programmed. If the above steps are not completed in the given sequence, or within the allotted time, the SKIS will exit the Customer Learn programming mode and the programming will be

VEHICLE THEFT SECURITY (Continued)

unsuccessful. The SKIS will also automatically exit the Customer Learn programming mode if it sees a non-blank Sentry Key transponder when it should see a blank, if it has already programmed eight (8) valid Sentry Keys, or if the ignition switch is turned to the Off position for more than about fifty seconds.

NOTE: If an attempt is made to start the vehicle while in the Customer Learn mode (SKIS indicator flashing), the SKIS will respond as though the vehicle were being started with an invalid key. In other words, the engine will stall after about two seconds of operation. No faults will be set.

NOTE: Once a Sentry Key has been programmed as a valid key to a vehicle, it cannot be programmed as a valid key for use on any other vehicle.

HOOD AJAR SWITCH

DESCRIPTION

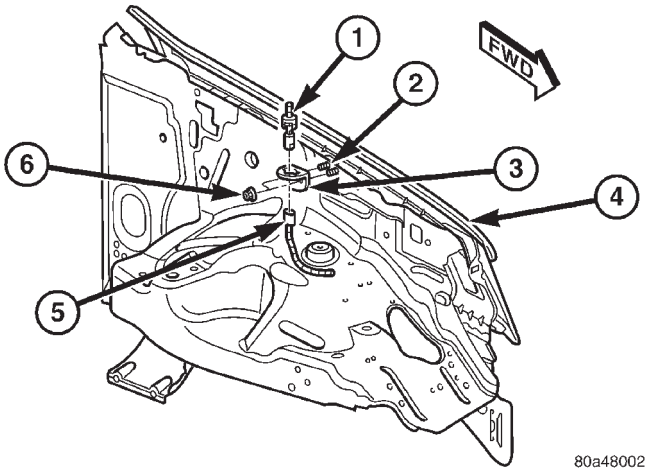

Fig. 1 Hood Ajar Switch

1 - SWITCH
2 - STUD (2)
3 - BRACKET
4 - FENDER
5 - CONNECTOR
6 - NUT (2)

The hood ajar switch is a self-adjusting, normally closed, single pole, double throw momentary switch that is used only on vehicles built for sale in certain international markets where it is required equipment (Fig. 1). This switch consists of a molded plastic body that ratchets within a molded plastic adjusting sleeve in order to provide the self-adjusting feature, and a molded plastic mounting plate. The switch body has an integral molded connector receptacle on the lower end, while the spring-loaded switch plunger extends from the upper end. Two external latches integral to the mounting plate lock the switch into a keyed mounting hole in the L-shaped stamped steel mounting bracket. The mounting bracket is fastened with nuts to two studs on the left inner fender shield near the fender ledge in the engine compartment. A molded plastic striker with three integral retainers is secured to the underside of the hood panel inner reinforcement to actuate the switch plunger as the hood panel is closed (Fig. 2). A single take out of the left headlamp and dash wire harness connects the switch to the vehicle electrical system. The switch receives a path to ground at all times through another take out of the headlamp and dash wire harness with an eyelet terminal connector that is secured by a ground screw to the left inner fender shield in the engine compartment.

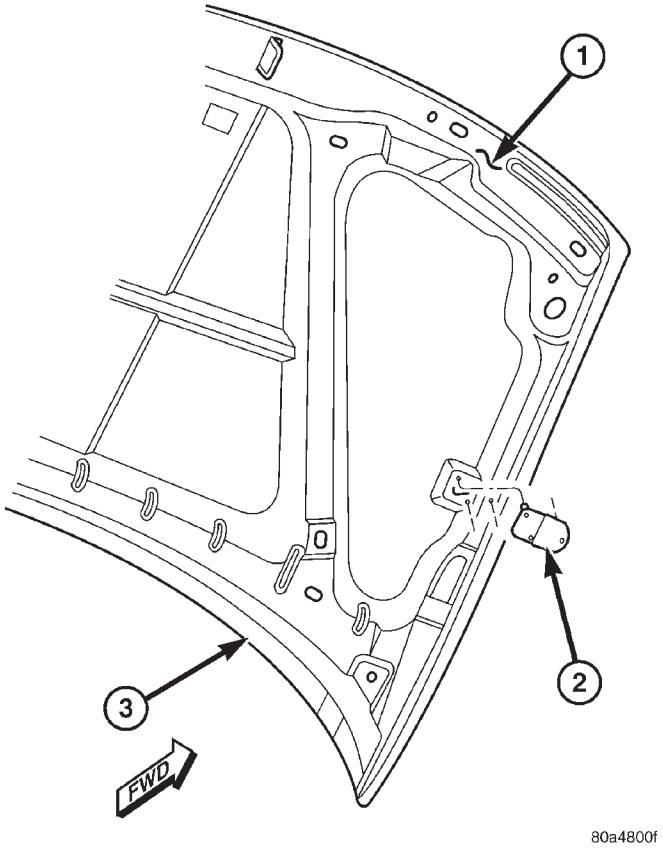

Fig. 2 Hood Ajar Switch Striker

1 - REINFORCEMENT
2 - STRIKER
3 - HOOD

The hood ajar switch adjusts itself as the striker pushes the switch body down through the switch sleeve when the hood panel is closed after the initial installation. This self-adjustment feature is only functional the first time the hood is closed following

HOOD AJAR SWITCH (Continued)

installation. If the switch requires adjustment following the initial installation, the switch must be replaced. The hood ajar switch cannot be repaired and, if faulty or damaged, it must be replaced.

OPERATION

The normally closed hood ajar switch is normally held open as the switch plunger is depressed by the striker on the hood panel when the hood panel is closed and latched. When the hood is opened, the spring-loaded switch plunger extends from the switch body and the switch contacts are opened. The hood ajar switch is connected in series between ground and the hood ajar switch sense input of the Body Control Module (BCM). The BCM uses an internal resistor pull up to monitor the state of the hood ajar switch contacts. The hood ajar switch can be diagnosed using conventional diagnostic tools and methods.

DIAGNOSIS AND TESTING - HOOD AJAR SWITCH

The diagnosis found here addresses an inoperative hood ajar switch. If the problem being diagnosed is related to hood ajar switch accuracy, be certain to confirm that the problem is not an improperly adjusted hood ajar switch. If no hood ajar switch adjustment problem is found, the following procedure will help to locate a short or open in the hood ajar switch circuit. Refer to the appropriate wiring information. The wiring information includes wiring diagrams, proper wire and connector repair procedures, details of wire harness routing and retention, connector pin-out information and location views for the various wire harness connectors, splices and grounds.

WARNING: ON VEHICLES EQUIPPED WITH AIRBAGS, DISABLE THE AIRBAG SYSTEM BEFORE ATTEMPTING ANY STEERING WHEEL, STEERING COLUMN, OR INSTRUMENT PANEL COMPONENT DIAGNOSIS OR SERVICE. DISCONNECT AND ISOLATE THE BATTERY NEGATIVE (GROUND) CABLE, THEN WAIT TWO MINUTES FOR THE AIRBAG SYSTEM CAPACITOR TO DISCHARGE BEFORE PERFORMING FURTHER DIAGNOSIS OR SERVICE. THIS IS THE ONLY SURE WAY TO DISABLE THE AIRBAG SYSTEM. FAILURE TO TAKE THE PROPER PRECAUTIONS COULD RESULT IN ACCIDENTAL AIRBAG DEPLOYMENT AND POSSIBLE PERSONAL INJURY.

(1) Disconnect and isolate the battery negative cable. Disconnect the left headlamp and dash wire harness connector for the hood ajar switch from the switch connector receptacle. Check for continuity between the ground circuit cavity of the left headlamp and dash wire harness connector for the hood ajar switch and a good ground. There should be continuity. If OK, go to Step 2. If not OK, repair the open ground circuit to ground (G106) as required.

(2) Check for continuity between the two terminals in the connector receptacle of the hood ajar switch. There should be continuity with the switch plunger extended, and no continuity with the switch plunger depressed. If OK, go to Step 3. If not OK, replace the faulty hood ajar switch.

(3) Disconnect the instrument panel wire harness connector (Connector - C1) from the Body Control Module (BCM). Check for continuity between the hood ajar switch sense circuit cavity of the left headlamp and dash wire harness connector for the hood ajar switch and a good ground. There should be no continuity. If OK, go to Step 4. If not OK, repair the shorted hood ajar switch sense circuit between the hood ajar switch and the BCM as required.

(4) Check for continuity between the hood ajar switch sense circuit cavities of the left headlamp and dash wire harness connector for the hood ajar switch and the instrument panel wire harness connector (Connector - C1) for the BCM. There should be continuity. If OK, proceed to diagnosis of the Vehicle Theft Security System (VTSS). (Refer to 8 - ELECTRICAL/VEHICLE THEFT SECURITY - DIAGNOSIS AND TESTING). If not OK, repair the open hood ajar switch sense circuit between the hood ajar switch and the BCM as required.

REMOVAL - HOOD AJAR SWITCH

(1) Unlatch and open the hood.

(2) Disconnect and isolate the battery negative cable.

(3) From the top of the hood ajar switch mounting bracket, squeeze the two switch latch tabs together and pull the switch upward (Fig. 3).

(4) Pull the hood ajar switch up through the hole in the mounting bracket far enough to access and disconnect the left headlamp and dash wire harness connector for the hood ajar switch from the switch connector receptacle.

(5) Remove the hood ajar switch from the mounting bracket.

REMOVAL - HOOD AJAR SWITCH BRACKET

(1) Remove the hood ajar switch from the mounting bracket. (Refer to 8 - ELECTRICAL/VEHICLE THEFT SECURITY/HOOD AJAR SWITCH - REMOVAL).

(2) Remove the two nuts that secure the hood ajar switch bracket to the left fender inner shield (Fig. 4).

(3) Remove the hood ajar switch bracket from the studs on the left fender inner shield.

HOOD AJAR SWITCH (Continued)

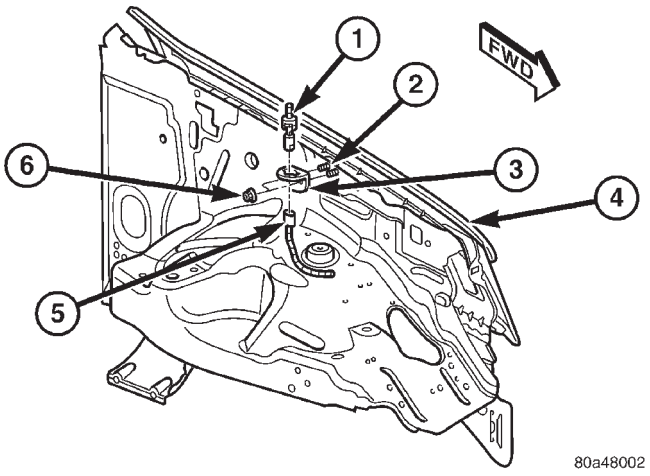

Fig. 3 Hood Ajar Switch

1 - SWITCH
2 - STUD (2)
3 - BRACKET
4 - FENDER
5 - CONNECTOR
6 - NUT (2)

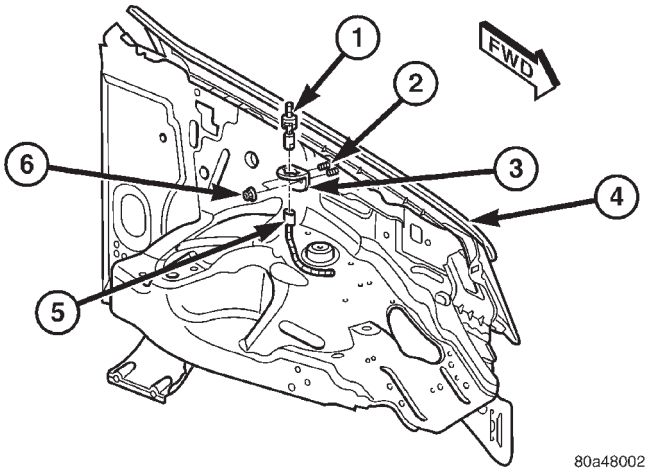

Fig. 4 Hood Ajar Switch

1 - SWITCH
2 - STUD (2)
3 - BRACKET
4 - FENDER
5 - CONNECTOR
6 - NUT (2)

REMOVAL - HOOD AJAR SWITCH STRIKER

(1) Unlatch and open the hood.

(2) Using a trim stick or another suitable wide flat-blade tool, gently pry the hood ajar switch striker away from the inner hood panel reinforcement far enough to disengage the three integral retainers from their mounting holes (Fig. 5).

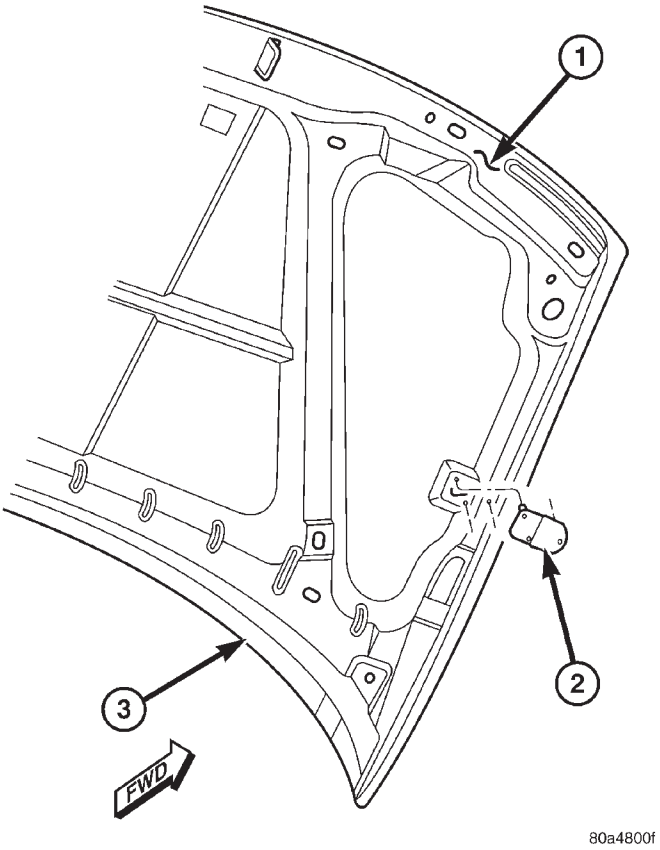

Fig. 5 Hood Ajar Switch Striker

1 - REINFORCEMENT
2 - STRIKER
3 - HOOD

(3) Remove the hood ajar switch striker from the inner hood panel reinforcement.

INSTALLATION - HOOD AJAR SWITCH

(1) Position the hood ajar switch into the hole in the mounting bracket (Fig. 3).

(2) Reconnect the left headlamp and dash wire harness connector for the hood ajar switch to the switch connector receptacle.

(3) From the top of the hood ajar switch mounting bracket, use hand pressure to press the switch downward into the mounting bracket until the latch tabs lock it into place.

(4) Reconnect the battery negative cable.

(5) Close and latch the hood.

INSTALLATION - HOOD AJAR SWITCH BRACKET

(1) Position the hood ajar switch bracket onto the studs on the left fender inner shield (Fig. 4).

(2) Install and tighten the two nuts that secure the hood ajar switch bracket to the left fender inner shield. Tighten the nuts to 11.8 N·m (105 in. lbs.).

HOOD AJAR SWITCH (Continued)

(3) Reinstall the hood ajar switch into the mounting bracket. (Refer to 8 - ELECTRICAL/VEHICLE THEFT SECURITY/HOOD AJAR SWITCH - INSTALLATION).

INSTALLATION - HOOD AJAR SWITCH STRIKER

(1) Position the hood ajar switch striker to the inner hood panel reinforcement (Fig. 5).

(2) Align the three integral retainers of the hood ajar switch striker with their mounting holes in the inner hood panel reinforcement.

(3) Using hand pressure, firmly press the hood ajar switch striker against the inner hood panel reinforcement until all of the striker retainers are fully engaged in their mounting holes.

(4) Close and latch the hood.

SKIS INDICATOR LAMP

DESCRIPTION

A Sentry Key Immobilizer System (SKIS) indicator lamp is standard equipment on all instrument clusters, but is only functional on vehicles equipped with the optional SKIS. The SKIS indicator lamp is located near the right edge of the instrument cluster overlay, to the right of the oil pressure gauge. The SKIS indicator consists of a graphical representation or icon of a key that is circled and crossed-out imprinted on an amber lens. The lens is located behind a cutout in the opaque layer of the instrument cluster overlay. The dark outer layer of the overlay prevents the icon from being clearly visible when the lamp is not illuminated. The icon appears silhouetted against an amber field through the translucent outer layer of the overlay when the indicator is illuminated from behind by a replaceable incandescent bulb and bulb holder unit located on the instrument cluster electronic circuit board. The SKIS indicator lens is serviced as a unit with the instrument cluster lens, hood and mask unit.

OPERATION

The Sentry Key Immobilizer System (SKIS) indicator lamp gives an indication to the vehicle operator of the status of the SKIS. This lamp is controlled by a transistor on the instrument cluster circuit board based upon electronic messages received by the cluster from the Sentry Key Immobilizer Module (SKIM) over the Programmable Communications Interface (PCI) data bus. The SKIS indicator lamp bulb receives battery current on the instrument cluster electronic circuit board through the fused ignition switch output (st-run) circuit whenever the ignition switch is in the On or Start positions; therefore, the lamp will always be off when the ignition switch is in any position except On or Start. The lamp bulb only illuminates when it is provided a path to ground by the instrument cluster transistor. The instrument cluster will turn on the SKIS indicator lamp for the following reasons:

- **Bulb Test** - Each time the ignition switch is turned to the On position, the SKIM tells the cluster to illuminate the lamp for about three seconds.
- **SKIS Lamp-On Message** - Each time the cluster receives a SKIS lamp-on message from the SKIM, the lamp will be illuminated. The lamp can be flashed on and off, or illuminated solid, as dictated by the message from the SKIM. For more information on the SKIS and the SKIS lamp control parameters, (Refer to 8 - ELECTRICAL/VEHICLE THEFT SECURITY - OPERATION - SENTRY KEY IMMOBILIZER SYSTEM). The lamp remains illuminated until the cluster receives a lamp-off message from the SKIM or until the ignition switch is turned to the Off position, whichever occurs first.
- **Actuator Test** - Each time the cluster is put through the actuator test, the lamp will be turned on for the duration of the test to confirm the functionality of the lamp and the cluster circuitry.

The SKIM performs a self-test each time the ignition switch is turned to the On position to decide whether the system is in good operating condition. The SKIM then sends the proper SKIS lamp-on or lamp-off messages to the instrument cluster. If the SKIS indicator lamp fails to light during the bulb test, replace the bulb with a known good unit. For further diagnosis of the SKIS indicator lamp or the instrument cluster circuitry that controls the lamp, (Refer to 8 - ELECTRICAL/INSTRUMENT CLUSTER - DIAGNOSIS AND TESTING). If the instrument cluster turns on the SKIS indicator lamp after the bulb test, either solid or flashing, it indicates that a SKIS malfunction has occurred or that the SKIS is inoperative. For proper diagnosis of the SKIS, the PCI data bus, or the message inputs to the instrument cluster that control the SKIS indicator lamp, a DRBIII® scan tool and the appropriate diagnostic information are required.

TRANSPONDER KEY

DESCRIPTION

Each ignition key used in the Sentry Key Immobilizer System (SKIS) has an integral transponder chip (Fig. 6). Ignition keys with this feature can be readily identified by a gray rubber cap molded onto the head of the key, while conventional ignition keys have a black molded rubber cap. The transponder chip is concealed beneath the molded rubber cap, where it is

TRANSPONDER KEY (Continued)

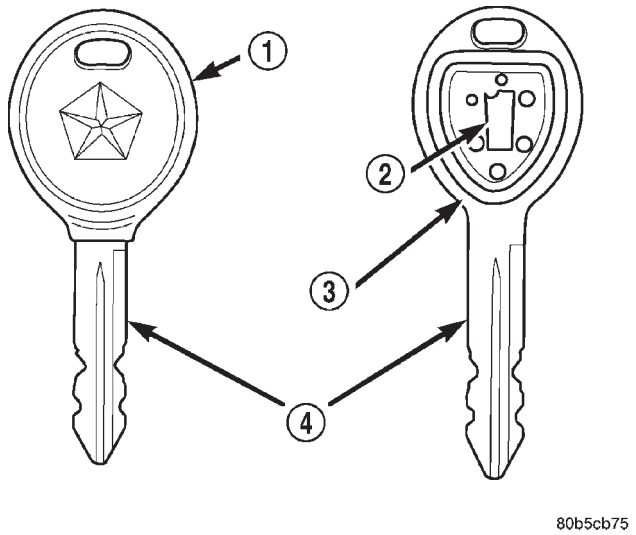

Fig. 6 Sentry Key Immobilizer Transponder

1 - MOLDED CAP
2 - TRANSPONDER CHIP
3 - MOLDED CAP REMOVED
4 - TRANSPONDER KEY

molded within a plastic mount into the head of the metal key. In addition to being cut to match the mechanical coding of the ignition lock cylinder, each new Sentry Key has a unique transponder identification code permanently programmed into it by the manufacturer. The Sentry Key transponder cannot be adjusted or repaired. If faulty or damaged, the entire key must be replaced.

OPERATION

When the ignition switch is turned to the On position, the Sentry Key Immobilizer Module (SKIM) communicates through its antenna with the Sentry Key transponder using a Radio Frequency (RF) signal. The SKIM then listens for a RF response from the transponder through the same antenna. The Sentry Key transponder chip is within the range of the SKIM transceiver antenna ring when it is inserted into the ignition lock cylinder. The SKIM determines whether a valid key is present in the ignition lock cylinder based upon the response from the transponder. If a valid key is detected, that fact is communicated by the SKIM to the Powertrain Control Module (PCM) over the Programmable Communications Interface (PCI) data bus, and the PCM allows the engine to continue running. If the PCM receives an invalid key message, or receives no message from the SKIM over the PCI data bus, the engine will be disabled after about two seconds of operation. The ElectroMechanical Instrument Cluster (EMIC) will also respond to the invalid key message on the PCI data bus by flashing the SKIS indicator on and off.

Each Sentry Key has a unique transponder identification code permanently programmed into it by the manufacturer. Likewise, the SKIM has a unique Secret Key code programmed into it by the manufacturer. When a Sentry Key is programmed into the memory of the SKIM, the SKIM stores the transponder identification code from the Sentry Key, and the Sentry Key learns the Secret Key code from the SKIM. Once the Sentry Key learns the Secret Key code of the SKIM, it is permanently stored in the memory of the transponder. Therefore, once a Sentry Key has been programmed to a particular vehicle, it cannot be used on any other vehicle. (Refer to 8 - ELECTRICAL/VEHICLE THEFT SECURITY - STANDARD PROCEDURE - TRANSPONDER PROGRAMMING).

The SKIS performs a self-test each time the ignition switch is turned to the On position, and will store key-related fault information in the form of Diagnostic Trouble Codes (DTC's) in SKIM memory if a Sentry Key transponder problem is detected. The Sentry Key transponder chip can be diagnosed, and any stored DTC's can be retrieved using a DRBIII® scan tool. Refer to the appropriate diagnostic information.

VTSS INDICATOR

DESCRIPTION

The Vehicle Theft Security System (VTSS) indicator consists of a red Light-Emitting Diode that is mounted within and integral to the automatic headlamp light sensor photo diode unit, which is located on the top of the instrument panel near the driver side defroster outlet. The hood, housing, and mount for this unit are all constructed of molded plastic. The oval-shaped hood is visible on the top of the instrument panel through a dedicated opening in the instrument panel top cover. Located on the forward surface of the hood facing the windshield is the small round clear photo diode lens, while the larger oval red VTSS indicator LED lens is located on the top of the hood. The remainder of the housing including the mount and the electrical connection are concealed beneath the instrument panel top cover. Two screws secure the unit to the top of the instrument panel top pad, while a single short pigtail wire with a four-way connector connects the unit to the vehicle electrical system through a take out of the instrument panel wire harness.

The VTSS indicator cannot be adjusted or repaired and, if faulty or damaged, the entire automatic headlamp light sensor/VTSS indicator unit must be replaced. (Refer to 8 - ELECTRICAL/LAMPS/LIGHT-

VTSS INDICATOR (Continued)

ING - EXTERIOR/AUTO HEADLAMP SENSOR - REMOVAL).

OPERATION

The Vehicle Theft Security System (VTSS) indicator gives a visible indication of the VTSS arming status. One side of Light-Emittiong Diode (LED) in the VTSS indicator is connected to unswitched battery current through a fused B(+) circuit and a fuse in the Junction Block (JB). The other side of the LED is hard wired to the Body Control Module (BCM), which controls the operation of the VTSS indicator by pulling this side of the LED circuit to ground. When the VTSS arming is in progress, the BCM will flash the LED rapidly on and off for about fifteen seconds. When the VTSS has been successfully armed, the BCM will flash the LED on and off continually at a much slower rate until the VTSS has been disarmed. The VTSS indicator can be diagnosed using conventional diagnostic tools and methods.

DIAGNOSIS AND TESTING - VTSS INDICATOR

The diagnosis found here addresses an inoperative Vehicle Theft Security System (VTSS) indicator condition. If the problem being diagnosed is related to indicator accuracy, be certain to confirm that the problem is with the indicator and not with an inoperative VTSS. (Refer to 8 - ELECTRICAL/VEHICLE THEFT SECURITY - DIAGNOSIS AND TESTING - VEHICLE THEFT SECURITY SYSTEM). If no VTSS problem is found, the following procedure will help to locate a short or open in the VTSS indicator control circuit. Refer to the appropriate wiring information. The wiring information includes wiring diagrams, proper wire and connector repair procedures, details of wire harness routing and retention, connector pinout information and location views for the various wire harness connectors, splices and grounds.

WARNING: ON VEHICLES EQUIPPED WITH AIRBAGS, DISABLE THE AIRBAG SYSTEM BEFORE ATTEMPTING ANY STEERING WHEEL, STEERING COLUMN, OR INSTRUMENT PANEL COMPONENT DIAGNOSIS OR SERVICE. DISCONNECT AND ISOLATE THE BATTERY NEGATIVE (GROUND) CABLE, THEN WAIT TWO MINUTES FOR THE AIRBAG SYSTEM CAPACITOR TO DISCHARGE BEFORE PERFORMING FURTHER DIAGNOSIS OR SERVICE. THIS IS THE ONLY SURE WAY TO DISABLE THE AIRBAG SYSTEM. FAILURE TO TAKE THE PROPER PRECAUTIONS COULD RESULT IN ACCIDENTAL AIRBAG DEPLOYMENT AND POSSIBLE PERSONAL INJURY.

(1) Check the fused B(+) fuse (Fuse 7 - 10 ampere) in the Junction Block (JB). If OK, go to Step 2. If not OK, repair the shorted circuit or component as required and replace the faulty fuse.

(2) Check for battery voltage at the fused B(+) fuse (Fuse 7 - 10 ampere) in the JB. If OK, go to Step 3. If not OK, repair the open fused B(+) circuit between the JB and the Power Distribution Center (PDC) as required.

(3) Disconnect and isolate the battery negative cable. Disconnect the instrument panel wire harness connector for the automatic headlamp light sensor/VTSS indicator from the automatic headlamp light sensor/VTSS indicator pigtail wire connector. Reconnect the battery negative cable. Check for battery voltage at the fused B(+) circuit cavity of the instrument panel wire harness connector for the automatic headlamp light sensor/VTSS indicator. If OK, go to Step 2. If not OK, repair the open fused B(+) circuit between the VTSS indicator and the JB as required.

(4) Disconnect and isolate the battery negative cable. Disconnect the instrument panel wire harness connector (Connector C3) for the JB from the JB connector receptacle. Check for continuity between the VTSS indicator driver circuit cavity of the instrument panel wire harness connector for the automatic headlamp light sensor/VTSS indicator and a good ground. There should be no continuity. If OK, go to Step 3. If not OK, repair the shorted VTSS indicator driver circuit between the VTSS indicator and the JB as required.

(5) Check for continuity between the VTSS indicator driver circuit cavities of the instrument panel wire harness connector for the automatic headlamp light sensor/VTSS indicator and the instrument panel wire harness connector (Connector C3) for the JB. There should be continuity. If OK, replace the faulty VTSS indicator. If not OK, repair the open VTSS indicator driver circuit between the VTSS indicator and the JB as required.

WIPERS/WASHERS

TABLE OF CONTENTS

page

FRONT WIPERS/WASHERS 1

REAR WIPERS/WASHERS 31

FRONT WIPERS/WASHERS

TABLE OF CONTENTS

page

FRONT WIPERS/WASHERS
DESCRIPTION 2
OPERATION 3
DIAGNOSIS AND TESTING 4
FRONT WIPER & WASHER SYSTEM 4
CLEANING 7
INSPECTION 7
FRONT CHECK VALVE
DESCRIPTION 8
OPERATION 8
REMOVAL 9
INSTALLATION 9
FRONT WASHER HOSES/TUBES
DESCRIPTION 9
OPERATION 10
FRONT WASHER NOZZLE
DESCRIPTION 10
OPERATION 10
REMOVAL 10
INSTALLATION 11
FRONT WASHER PUMP/MOTOR
DESCRIPTION 11
OPERATION 11
REMOVAL 12
INSTALLATION 12
FRONT WIPER ARM
DESCRIPTION 12
OPERATION 13
REMOVAL 13
INSTALLATION 13
FRONT WIPER BLADE
DESCRIPTION 14
OPERATION 14
REMOVAL 14
INSTALLATION 14

page

FRONT WIPER MODULE
DESCRIPTION 15
OPERATION 15
REMOVAL 16
INSTALLATION 16
RIGHT MULTI-FUNCTION SWITCH
DESCRIPTION 17
OPERATION 18
DIAGNOSIS AND TESTING 18
RIGHT MULTI-FUNCTION SWITCH 18
REMOVAL 19
INSTALLATION 20
WASHER FLUID LEVEL SWITCH
DESCRIPTION 21
OPERATION 21
REMOVAL 21
INSTALLATION 22
WASHER RESERVOIR
DESCRIPTION 22
OPERATION 23
REMOVAL 23
INSTALLATION 24
WIPER HIGH/LOW RELAY
DESCRIPTION 24
OPERATION 25
DIAGNOSIS AND TESTING 25
WIPER HIGH/LOW RELAY 25
REMOVAL 26
INSTALLATION 27
WIPER ON/OFF RELAY
DESCRIPTION 27
OPERATION 28
DIAGNOSIS AND TESTING 28
WIPER ON/OFF RELAY 28
REMOVAL 29
INSTALLATION 30

FRONT WIPERS/WASHERS

DESCRIPTION

An electrically operated intermittent front wiper and washer system is standard factory-installed safety equipment on this model. The front wiper and washer system includes the following major components, which are described in further detail elsewhere in this service information:

- **Body Control Module** - The Body Control Module (BCM) is located on the Junction Block (JB) underneath the driver side end of the instrument panel. The BCM contains integrated circuitry, a central processing unit and the programming to provide all of the proper front wiper and washer system features based upon the monitored inputs. The BCM circuitry monitors hard wired switch inputs, as well as message inputs received from other vehicle electronic modules on the Programmable Communications Interface (PCI) data bus network. (Refer to 8 - ELECTRICAL/ELECTRONIC CONTROL MODULES/BODY CONTROL/CENTRAL TIMER MODULE - DESCRIPTION).
- **Front Washer Nozzles** - The dual fluidic front washer nozzles are secured with integral snap features to dedicated openings in the cowl plenum cover/grille panel located near the base of the windshield. The washer plumbing fittings for the washer nozzles are concealed beneath the cowl plenum cover/grille panel.
- **Front Washer Pump/Motor** - The front washer pump/motor unit is located in a dedicated hole on the lower outboard side of the washer reservoir, behind the inner fender liner ahead of the left front wheel. The front washer pump is located ahead of and below the rear washer pump.
- **Front Wiper Arms** - The two bolt-on front wiper arms are secured to the two wiper pivots, which extend through the cowl plenum cover/grille panel located near the base of the windshield.
- **Front Wiper Blades** - The two front wiper blades are secured to the two front wiper arms, and are parked on the glass near the bottom of the windshield when the front wiper system is not in operation.
- **Front Wiper Module** - The front wiper pivots are the only visible components of the front wiper module. The remainder of the module is concealed within the cowl plenum beneath the cowl plenum cover/grille panel. The front wiper module includes the module bracket, the single front wiper motor, the front wiper linkage, and the two front wiper pivots.
- **Right Multi-Function Switch** - The right (wiper) multi-function switch is secured to the right side of the multi-function switch mounting housing near the top of the steering column. Only the control stalk for the right multi-function switch is visible, the remainder of the switch is concealed beneath the steering column shrouds. The right multi-function switch contains all of the switches and control circuitry for both the front and rear wiper and washer systems.
- **Washer Fluid Level Switch** - The washer fluid level switch is located in a dedicated hole near the center of the forward surface of the washer reservoir, behind the inner fender liner ahead of the left front wheel.
- **Washer Reservoir** - The washer reservoir is concealed between the left inner fender shield and the left outer fender panel, behind the inner fender liner and ahead of the left front wheel. The washer reservoir filler neck is the only visible portion of the reservoir, and it is accessed from the left front corner of the engine compartment.
- **Wiper High-Low Relay** - The wiper high-low relay is located in the Power Distribution Center (PDC) in the engine compartment near the battery.
- **Wiper On-Off Relay** - The wiper on-off relay is located in the Power Distribution Center (PDC) in the engine compartment near the battery.

Features of the front wiper and washer system include the following:

- **Continuous Wipe Modes** - The two-speed wiper motor, the wiper on/off relay, the wiper high-low relay, the BCM, and the internal circuitry of the right multi-function switch work in concert to provide two continuous wipe cycles, low speed or high speed.
- **Headlamps On With Wipers** - The BCM provides an automatic headlamps on with wipers turned on feature for models equipped with the optional automatic headlamps. This is a customer programmable feature. If this feature is enabled, the headlamps will turn on automatically when the windshield wipers are turned on; and, if the headlamps were turned on automatically when the wipers were turned on, they will turn off automatically when the wipers are turned off. (Refer to 8 - ELECTRICAL/OVERHEAD CONSOLE - STANDARD PROCEDURE - ELECTRONIC VEHICLE INFORMATION CENTER PROGRAMMING).
- **Mist Wipe Mode** - The right multi-function switch has a momentary Mist position that will operate the wipers for a single complete cycle, then park the front wiper blades near the base of the windshield.
- **Speed Sensitive Intermittent Wipe Mode** - The internal circuitry of both the right multi-function switch and the BCM work in concert to provide an intermittent wipe mode with five delay interval selections. The BCM also automatically adjusts each manually selected delay interval to compensate for vehicle speed.

FRONT WIPERS/WASHERS (Continued)

- **Washer Mode** - When the front washer system is activated with the right multi-function switch while the front wiper system is operating, washer fluid will be dispensed onto the windshield glass through the washer nozzles for as long as the front washer pump is energized.
- **Wipe-After-Wash Mode** - The internal circuitry of the BCM provides a wipe-after-wash feature which, if the front wipers are turned Off, will operate the front washer pump/motor and the front wipers for as long as the washer system is activated, then provide several additional wipe cycles after the washer system is deactivated before parking the front wiper blades near the base of the windshield.

Hard wired circuitry connects the front wiper and washer system components to the electrical system of the vehicle. These hard wired circuits are integral to several wire harnesses, which are routed throughout the vehicle and retained by many different methods. These circuits may be connected to each other, to the vehicle electrical system and to the front wiper and washer system components through the use of a combination of soldered splices, splice block connectors, and many different types of wire harness terminal connectors and insulators. Refer to the appropriate wiring information. The wiring information includes wiring diagrams, proper wire and connector repair procedures, further details on wire harness routing and retention, as well as pin-out and location views for the various wire harness connectors, splices and grounds.

OPERATION

The front wiper and washer system is intended to provide the vehicle operator with a convenient, safe, and reliable means of maintaining visibility through the windshield glass. The various components of this system are designed to convert electrical energy produced by the vehicle electrical system into the mechanical action of the wiper blades to wipe the outside surface of the glass, as well as into the hydraulic action of the washer system to apply washer fluid stored in an on-board reservoir to the area of the glass to be wiped. When combined, these components provide the means to effectively maintain clear visibility for the vehicle operator by removing excess accumulations of rain, snow, bugs, mud, or other minor debris from the outside windshield glass surface that might be encountered while driving the vehicle under numerous types of inclement operating conditions. The vehicle operator initiates all front wiper and washer system functions with the right multi-function switch control stalk that extends from the right side of the steering column, just below the steering wheel. Rotating the knob on the end of the right (wiper) multi-function switch control stalk selects the desired front wiper system operating mode. The front wiper system allows the vehicle operator to select from two continuous wiper speeds, Hi or Lo, or one of five intermittent wipe Delay mode intervals. Pulling the control stalk downwards and releasing it selects the front wiper system Mist mode, which operates the front wipers for one complete wipe cycle. Pulling the control stalk towards the steering wheel activates the front washer pump/motor, which dispenses washer fluid onto the windshield glass through the front washer nozzles.

When the ignition switch is in the Accessory or On positions, battery current from a fuse in the Power Distribution Center (PDC) is provided to the wiper and washer system circuit breaker in the Junction Block (JB). This automatic resetting circuit breaker provides battery current through a fused ignition switch output (run-acc) circuit to the front wiper motor. A separate fuse in the JB provides battery current through another fused ignition switch output (run-acc) circuit to the right multi-function switch. The right multi-function switch provides hard wired resistor multiplexed inputs to the Body Control Module (BCM) for all wiper system functions. The BCM controls the wiper system operation by energizing the wiper on/off relay. When the Lo position of the right multi-function switch control knob is selected, the energized wiper on/off relay directs battery current through the normally closed contacts of the wiper high/low relay to the low speed brush of the front wiper motor, which causes the front wipers to cycle at a low speed. When the Hi position of the control knob is selected, the Hi position circuitry within the switch also directs battery current to the wiper high/low relay. The energized wiper on/off relay then directs battery current through the normally open contacts of the wiper high/low relay to the high speed brush of the front wiper motor, which causes the front wipers to cycle at a high speed.

The intermittent wipe, wipe-after-wash, and mist features of the front wiper and washer system are provided by the electronic intermittent wipe logic circuit within the BCM. In order to provide the intermittent wipe feature, the BCM monitors the wiper switch state, the wiper motor park switch state, and vehicle speed messages received from the Powertrain Control Module (PCM) over the Programmable Communications Interface (PCI) data bus network. In order to provide the wipe-after-wash feature, the BCM monitors both the front washer switch state and the wiper motor park switch state. In order to provide the mist feature, the BCM monitors both the wiper switch state and the wiper motor park switch state. When a Delay position is selected with the right multi-function switch control knob, the BCM logic circuit responds by calculating the correct delay interval. The intermittent wipe mode delay times are speed sensitive. Above about sixteen kilometers-per-hour (ten miles-per-hour) the delay is driver adjustable from about one-half second to about eighteen

FRONT WIPERS/WASHERS (Continued)

seconds. Below about sixteen kilometers-per-hour (ten miles-per-hour) the delay times are doubled, from about one second to about thirty-six seconds. The BCM then energizes the wiper on/off relay by pulling the relay control coil to ground. The energized wiper on/off relay directs battery current through the normally closed contacts of the wiper high/low relay to the low speed brush of the wiper motor. The BCM monitors the front wiper motor operation through the wiper park switch sense circuit, which allows the BCM to determine the proper timing to begin the next wiper blade sweep.

When the Off position of the right multi-function switch control knob is selected, one of two events is possible. The event that will occur depends upon the position of the wiper blades on the windshield at the moment that the Off position is selected. If the wiper blades are in the down position on the windshield when the Off position is selected, the park switch that is integral to the front wiper motor is closed to ground and the wiper motor ceases to operate. If the wiper blades are not in the down position on the windshield at the moment the Off position is selected, the park switch is closed to battery current through the fused ignition switch output (run-acc) circuit of the front wiper motor. The park switch sense circuit directs this battery current to the low speed brush of the wiper motor through the normally closed circuits of the wiper on/off and wiper high/low relays. This causes the wiper motor to continue running until the wiper blades are in the down position on the windshield and the park switch is again closed to ground.

When the Wash position of the right multi-function switch control stalk is selected, the Wash position circuitry within the switch directs battery current to the front washer pump motor. The BCM monitors the washer switch state through a washer pump switch sense input. When the washer switch is closed with the front wiper system turned Off, or if the Mist mode is selected with the right multi-function switch control stalk, the BCM operates the front wiper motor through the wiper on/off and wiper high/low relays in the same manner as it does to provide the Delay mode operation. After the state of the washer switch changes to open, the BCM monitors the front wiper motor through the wiper park switch sense circuit, which allows the BCM to monitor the number of wiper blade sweeps.

Proper testing of the BCM, the PCM, or the PCI data bus vehicle speed messages requires a DRBIII® scan tool. Refer to the appropriate diagnostic information. Refer to the owner's manual in the vehicle glove box for more information on the features and operation of the front wiper and washer system.

DIAGNOSIS AND TESTING - FRONT WIPER & WASHER SYSTEM

WIPER SYSTEM

The diagnosis found here addresses an electrically inoperative front wiper system. If the front wiper motor operates, but the wipers do not move on the windshield, replace the faulty front wiper module. If the wipers operate, but chatter, lift, or do not clear the glass, clean and inspect the wiper system components as required. (Refer to 8 - ELECTRICAL/ FRONT WIPERS/WASHERS - INSPECTION) and (Refer to 8 - ELECTRICAL/FRONT WIPERS/WASHERS - CLEANING). Refer to the appropriate wiring information. The wiring information includes wiring diagrams, proper wire and connector repair procedures, details of wire harness routing and retention, connector pin-out information and location views for the various wire harness connectors, splices and grounds.

The following tests will help to diagnose the hard wired components and circuits of the front wiper system. However, these tests may not prove conclusive in the diagnosis of this system. In order to obtain conclusive testing of the front wiper system, the Programmable Communications Interface (PCI) data bus network and all of the electronic modules that provide inputs to or receive outputs from the front wiper system components must be checked. The most reliable, efficient, and accurate means to diagnose the front wiper system requires the use of a DRBIII® scan tool. Refer to the appropriate diagnostic information. The DRBIII® scan tool can provide confirmation that the PCI data bus is functional, that all of the electronic modules are sending and receiving the proper messages on the PCI data bus, and that the wiper on/off and wiper high/low relays are being sent the proper hard wired outputs by the Body Control Module (BCM) for them to perform their front wiper system functions.

WARNING: ON VEHICLES EQUIPPED WITH AIRBAGS, DISABLE THE AIRBAG SYSTEM BEFORE ATTEMPTING ANY STEERING WHEEL, STEERING COLUMN, OR INSTRUMENT PANEL COMPONENT DIAGNOSIS OR SERVICE. DISCONNECT AND ISOLATE THE BATTERY NEGATIVE (GROUND) CABLE, THEN WAIT TWO MINUTES FOR THE AIRBAG SYSTEM CAPACITOR TO DISCHARGE BEFORE PERFORMING FURTHER DIAGNOSIS OR SERVICE. THIS IS THE ONLY SURE WAY TO DISABLE THE AIRBAG SYSTEM. FAILURE TO TAKE THE PROPER PRECAUTIONS COULD RESULT IN ACCIDENTAL AIRBAG DEPLOYMENT AND POSSIBLE PERSONAL INJURY.

FRONT WIPERS/WASHERS (Continued)

(1) Check the fused ignition switch output (run-acc) fuse (Fuse 29 - 10 ampere) in the Junction Block (JB). If OK, go to Step 2. If not OK, repair the shorted circuit or component as required and replace the faulty fuse.

(2) Turn the ignition switch to the On position. Check for battery voltage at the fused ignition switch output (run-acc) fuse (Fuse 29 - 10 ampere) in the JB. If OK, go to Step 3. If not OK, repair the open fused ignition switch output (run-acc) circuit between the JB and the ignition switch as required.

(3) Turn the ignition switch to the Off position. Disconnect and isolate the battery negative cable. Disconnect the instrument panel wire harness connector for the right multi-function switch from the switch connector receptacle. Reconnect the battery negative cable. Turn the ignition switch to the On position. Check for battery voltage at the fused ignition switch output (run-acc) circuit cavity of the instrument panel wire harness connector for the right multi-function switch. If OK, go to Step 4. If not OK, repair the open fused ignition switch output (run-acc) circuit between the right multi-function switch and the JB as required.

(4) Turn the ignition switch to the Off position. Disconnect and isolate the battery negative cable. Disconnect the instrument panel wire harness connector (Connector C2) for the Body Control Module (BCM) from the BCM connector receptacle. Check for continuity between the windshield wiper switch return circuit cavity of the instrument panel wire harness connector for the right multi-function switch and a good ground. There should be no continuity. If OK, go to Step 5. If not OK, repair the shorted windshield wiper switch return circuit between the right multi-function switch and the BCM as required.

(5) Check for continuity between the windshield wiper switch return circuit cavities of the instrument panel wire harness connector for the right multi-function switch and the instrument panel wire harness connector (Connector C2) for the BCM. There should be continuity. If OK, go to Step 6. If not OK, repair the open windshield wiper switch return circuit between the right multi-function switch and the BCM as required.

(6) Check for continuity between the windshield wiper switch mux circuit cavity of the instrument panel wire harness connector for the right multi-function switch and a good ground. There should be no continuity. If OK, go to Step 7. If not OK, repair the shorted windshield wiper switch mux circuit between the right multi-function switch and the BCM as required.

(7) Check for continuity between the windshield wiper switch mux circuit cavities of the instrument panel wire harness connector for the right multi-function switch and the instrument panel wire harness connector (Connector C2) for the BCM. There should be continuity. If OK, reconnect the instrument panel wire harness connector (Connector C2) to the BCM connector receptacle and go to Step 8. If not OK, repair the open windshield wiper switch mux circuit between the right multi-function switch and the BCM as required.

(8) Remove the right multi-function switch from the steering column and check the switch continuity. (Refer to 8 - ELECTRICAL/FRONT WIPERS/WASHERS/RIGHT MULTI-FUNCTION SWITCH - DIAGNOSIS AND TESTING). If OK, reinstall the right multi-function switch, reconnect the instrument panel wire harness connector for the right multi-function switch to the switch connector receptacle and go to Step 9. If not OK, replace the faulty switch.

(9) If the problem being diagnosed is that the wiper blades do not park, but all other functions are OK, go to Step 10. If the problem being diagnosed is that the wipers will operate in low speed when an intermittent delay is selected, but the wiper blades do not park, go to Step 11. If the problem being diagnosed is no wiper operation in any mode, go to Step 14. If the problem being diagnosed is that the wipers will not operate in high speed, go to Step 18.

(10) Back probe the fused ignition switch output (V6) circuit cavity of the left headlamp and dash wire harness connector for the front wiper module at the motor pigtail wire connector. Reconnect the battery negative cable. Turn the ignition switch to the On position. Check for battery voltage. If OK, go to Step 11. If not OK, repair the open fused ignition switch output (V6) circuit between the front wiper module and the JB as required.

(11) Turn the ignition switch to the Off position. Disconnect and isolate the battery negative cable. Disconnect the left headlamp and dash wire harness connector for the front wiper module from the motor pigtail wire connector. Disconnect the instrument panel wire harness connector (Connector C2) for the JB from the JB connector receptacle. Check for continuity between the wiper park switch sense circuit cavity of the left headlamp and dash wire harness connector for the front wiper module and a good ground. There should be no continuity. If OK, go to Step 12. If not OK, repair the shorted wiper park switch sense circuit between the front wiper module and the JB as required.

(12) Check for continuity between the wiper park switch sense circuit cavities of the left headlamp and dash wire harness connector for the front wiper module and the instrument panel wire harness connector (Connector C2) for the JB. There should be continuity. If OK reconnect the instrument panel wire harness connector (Connector C2) for the JB to the JB

FRONT WIPERS/WASHERS (Continued)

connector receptacle and go to Step 13. If not OK, repair the open wiper park switch sense circuit between the front wiper module and the JB as required.

(13) Reconnect the left headlamp and dash wire harness connector for the front wiper module to the motor pigtail connector. Back probe the wiper park switch sense circuit cavity of the left headlamp and dash wire harness connector for the front wiper module at the motor pigtail connector. Reconnect the battery negative cable. Turn the ignition switch to the On position. Check for battery voltage. With the control knob of the right multi-function switch in the Lo or Hi position, the meter should switch between battery voltage and zero volts. Turn the right multi-function switch control knob to the Off position and the meter should read battery voltage until the wiper blades park, and then read a steady zero volts. If OK, use a DRBIII® scan tool to diagnose the BCM. Refer to the appropriate diagnostic information. If not OK, replace the faulty front wiper module.

(14) Back probe the ground circuit cavity of the left headlamp and dash wire harness connector for the front wiper module at the motor pigtail connector. Check for continuity to a good ground. There should be continuity. If OK, go to Step 15. If not OK, repair the open ground circuit to ground (G106) as required.

(15) Remove the wiper system circuit breaker from the JB. Reconnect the battery negative cable. Turn the ignition switch to the On position. Check for battery voltage at the fused ignition switch output (run-acc) circuit cavity for the wiper system circuit breaker in the JB. If OK, go to Step 16. If not OK, repair the open fused ignition switch output (run-acc) circuit between the JB and the ignition switch as required.

(16) Turn the ignition switch to the Off position. Disconnect and isolate the battery negative cable. Reinstall the wiper system circuit breaker in the JB. Reconnect the battery negative cable. Turn the ignition switch to the On position. Check for battery voltage at the fused ignition switch output (V6) circuit cavity for the wiper system circuit breaker in the JB. If OK, go to Step 17. If not OK, replace the faulty circuit breaker.

(17) (Refer to 8 - ELECTRICAL/FRONT WIPERS/WASHERS/WIPER ON/OFF RELAY - DIAGNOSIS AND TESTING). If OK, go to Step 18. If not OK, replace the faulty wiper on/off relay.

(18) (Refer to 8 - ELECTRICAL/FRONT WIPERS/WASHERS/WIPER HI/LOW RELAY - DIAGNOSIS AND TESTING). If OK, replace the faulty front wiper module. If not OK, replace the faulty wiper high/low relay.

WASHER SYSTEM

The diagnosis found here addresses an electrically inoperative washer system. If the washer pump/motor operates, but no washer fluid is emitted from the washer nozzles, be certain to check the fluid level in the reservoir. Also inspect the washer system components as required. (Refer to 8 - ELECTRICAL/FRONT WIPERS/WASHERS - INSPECTION). Refer to the appropriate wiring information. The wiring information includes wiring diagrams, proper wire and connector repair procedures, details of wire harness routing and retention, connector pin-out information and location views for the various wire harness connectors, splices and grounds.

WARNING: ON VEHICLES EQUIPPED WITH AIRBAGS, DISABLE THE AIRBAG SYSTEM BEFORE ATTEMPTING ANY STEERING WHEEL, STEERING COLUMN, OR INSTRUMENT PANEL COMPONENT DIAGNOSIS OR SERVICE. DISCONNECT AND ISOLATE THE BATTERY NEGATIVE (GROUND) CABLE, THEN WAIT TWO MINUTES FOR THE AIRBAG SYSTEM CAPACITOR TO DISCHARGE BEFORE PERFORMING FURTHER DIAGNOSIS OR SERVICE. THIS IS THE ONLY SURE WAY TO DISABLE THE AIRBAG SYSTEM. FAILURE TO TAKE THE PROPER PRECAUTIONS COULD RESULT IN ACCIDENTAL AIRBAG DEPLOYMENT AND POSSIBLE PERSONAL INJURY.

(1) Turn the ignition switch to the On position. Turn the control knob of the right (wiper) multi-function switch to the Lo or Hi wiper position. Check whether the front wiper system operates. If OK, go to Step 2. If not OK, repair the wiper system as required before you proceed with washer system diagnosis. Refer to WIPER SYSTEM

(2) Turn the control knob of the right multi-function switch to the Off position. Pull the right multi-function switch control stalk toward the steering wheel to close the washer switch. The washer pump should operate and the front wipers should operate for about three sweep cycles after the switch is released before they park. If the wipers are OK, but the washers are not, go to Step 3. If the washers are OK, but the wipers are not, go to Step 5.

(3) Turn the ignition switch to the Off position. Disconnect and isolate the battery negative cable. Disconnect the left headlamp and dash wire harness connector for the front washer pump/motor from the pump/motor connector receptacle. Check for continuity between the ground circuit cavity of the left headlamp and dash wire harness connector for the front washer pump/motor and a good ground. There should be continuity. If OK, go to Step 4. If not OK, repair the open ground circuit to ground (G106) as required.

FRONT WIPERS/WASHERS (Continued)

(4) Reconnect the battery negative cable. Turn the ignition switch to the On position. While pulling the right multi-function switch control stalk toward the steering wheel to close the washer switch, check for battery voltage at the washer pump switch sense circuit cavity of the left headlamp and dash wire harness connector for the front washer pump/motor. If OK, replace the faulty washer pump/motor. If not OK, repair the open washer pump switch sense circuit between the right multi-function switch and the front washer pump/motor as required.

(5) Turn the ignition switch to the Off position. Disconnect and isolate the battery negative cable. Disconnect the instrument panel wire harness connector (Connector C2) for the Body Control Module (BCM) from the BCM connector receptacle. Reconnect the battery negative cable. Turn the ignition switch to the On position. While pulling the right multi-function switch control stalk toward the steering wheel to close the washer switch, check for battery voltage at the washer pump switch sense circuit cavity of the instrument panel wire harness connector (Connector C2) for the BCM. If OK, use a DRBIII® scan tool to diagnose the BCM. Refer to the appropriate diagnostic information. If not OK, repair the open washer pump switch sense circuit between the right multi-function switch and the BCM as required.

CLEANING - FRONT WIPER & WASHER SYSTEM

WIPER SYSTEM

The squeegees of wiper blades exposed to the elements for a long time tend to lose their wiping effectiveness. Periodic cleaning of the squeegees is suggested to remove any deposits of salt or road film. The wiper blades, arms, and windshield glass should only be cleaned using a sponge or soft cloth and windshield washer fluid, a mild detergent, or a non-abrasive cleaner. If the wiper blades continue to leave streaks, smears, hazing, or beading on the glass after thorough cleaning of the squeegees and the glass, the entire wiper blade assembly must be replaced.

CAUTION: Protect the rubber squeegees of the wiper blades from any petroleum-based cleaners, solvents, or contaminants. These products can rapidly deteriorate the rubber squeegees.

WASHER SYSTEM

If the washer system is contaminated with foreign material, drain the washer reservoir by removing the front washer pump/motor from the reservoir. Clean foreign material from the inside of the washer reservoir using clean washer fluid, a mild detergent, or a non-abrasive cleaner. Flush foreign material from the washer system plumbing by first disconnecting the washer hoses from the washer nozzles, then running the washer pump/motor to run clean washer fluid or water through the system. Plugged or restricted washer nozzles should be carefully back-flushed using compressed air. If the washer nozzle obstruction cannot be cleared, replace the washer nozzle.

CAUTION: Never introduce petroleum-based cleaners, solvents, or contaminants into the washer system. These products can rapidly deteriorate the rubber seals and hoses of the washer system, as well as the rubber squeegees of the wiper blades.

CAUTION: Never use compressed air to flush the washer system plumbing. Compressed air pressures are too great for the washer system plumbing components and will result in further system damage. Never use sharp instruments to clear a plugged washer nozzle or damage to the nozzle orifice and improper nozzle spray patterns will result.

INSPECTION - FRONT WIPER & WASHER SYSTEM

WIPER SYSTEM

The front wiper blades and wiper arms should be inspected periodically, not just when wiper performance problems are experienced. This inspection should include the following points:

(1) Inspect the wiper arms for any indications of damage, or contamination. If the wiper arms are contaminated with any foreign material, clean them as required. (Refer to 8 - ELECTRICAL/FRONT WIPERS/WASHERS - CLEANING). If a wiper arm is damaged or corrosion is evident, replace the wiper arm with a new unit. Do not attempt to repair a wiper arm that is damaged or corroded.

(2) Carefully lift the wiper blade off of the glass. Note the action of the wiper arm hinge. The wiper arm should pivot freely at the hinge, but with no side-to-side looseness evident. If there is any binding evident in the wiper arm hinge, or there is evident side-to-side play in the wiper arm hinge, replace the wiper arm.

CAUTION: Do not allow the wiper arm to spring back against the glass without the wiper blade in place or the glass may be damaged.

(3) Once proper hinge action of the wiper arm is confirmed, check the hinge for proper spring tension. Remove the wiper blade from the wiper arm. Either place a small postal scale between the blade end of

FRONT WIPERS/WASHERS (Continued)

the wiper arm and the glass, or carefully lift the blade end of the arm away from the glass using a small fish scale. Compare the scale readings between the right and left wiper arms. Replace a wiper arm if it has comparatively lower spring tension, as evidenced by a lower scale reading.

(4) Inspect the wiper blades and squeegees for any indications of damage, contamination, or rubber deterioration (Fig. 1). If the wiper blades or squeegees are contaminated with any foreign material, clean them and the glass as required. (Refer to 8 - ELECTRICAL/FRONT WIPERS/WASHERS - CLEANING). After cleaning the wiper blade and the glass, if the wiper blade still fails to clear the glass without smearing, streaking, chattering, hazing, or beading, replace the wiper blade. Also, if a wiper blade is damaged or the squeegee rubber is damaged or deteriorated, replace the wiper blade with a new unit. Do not attempt to repair a wiper blade that is damaged.

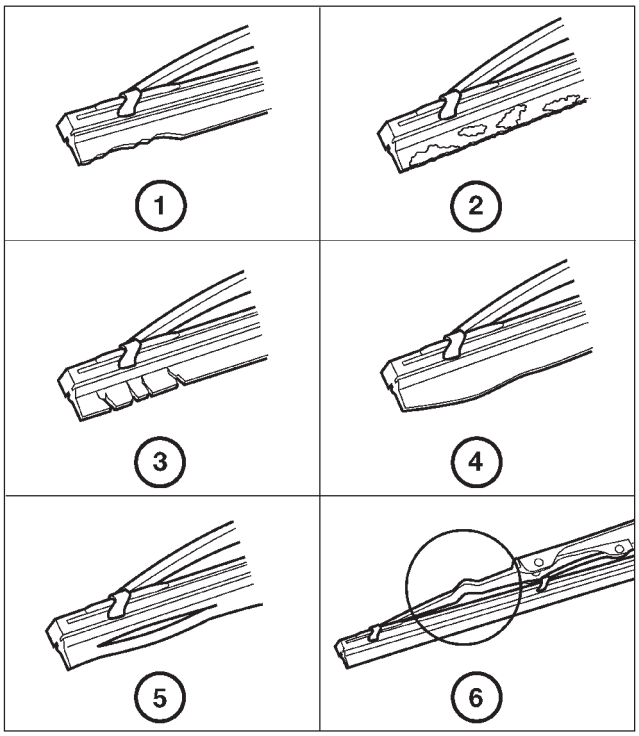

809ac961

Fig. 1 Wiper Blade Inspection

1 - WORN OR UNEVEN EDGES
2 - ROAD FILM OR FOREIGN MATERIAL DEPOSITS
3 - HARD, BRITTLE, OR CRACKED
4 - DEFORMED OR FATIGUED
5 - SPLIT
6 - DAMAGED SUPPORT COMPONENTS

WASHER SYSTEM

The washer system components should be inspected periodically, not just when washer performance problems are experienced. This inspection should include the following points:

(1) Check for ice or other foreign material in the washer reservoir. If contaminated, clean and flush the washer system. (Refer to 8 - ELECTRICAL/ FRONT WIPERS/WASHERS - CLEANING).

(2) Inspect the washer plumbing for pinched, leaking, deteriorated, or incorrectly routed hoses and damaged or disconnected hose fittings. Replace damaged or deteriorated hoses and hose fittings. Leaking washer hoses can sometimes be repaired by cutting the hose at the leak and splicing it back together using an in-line connector fitting. Similarly, sections of deteriorated hose can be cut out and replaced by splicing in new sections of hose using in-line connector fittings. Whenever routing a washer hose or a wire harness containing a washer hose, it must be routed away from hot, sharp, or moving parts. Also, sharp bends that might pinch the washer hose must be avoided.

FRONT CHECK VALVE

DESCRIPTION

A front washer system check valve is standard equipment on this model. The front check valve is integral to the front washer nozzle plumbing wye fitting located in the cowl plenum beneath the cowl plenum cover/grille panel near the base of the windshield. The check valve consists of a molded plastic body with a round center section. Three barbed hose nipples are formed in a wye configuration on the outside circumference of the center section of the valve body. Within the check valve body, a small check valve operated by a small coiled spring restricts flow through the unit until the valve is unseated by a predetermined inlet fluid pressure. The front check valve cannot be adjusted or repaired and, if faulty or damaged, it must be replaced.

OPERATION

The front check valve provides more than one function in this application. It serves as a wye connector fitting between the cowl grille panel and washer nozzle sections of the front washer supply hose. It also prevents washer fluid from draining out of the front washer supply hoses back to the washer reservoir. This drain-back would result in a lengthy delay from when the front washer switch is actuated until washer fluid was dispensed through the front washer nozzles, because the front washer pump would have to refill the front washer plumbing from the reservoir to the nozzles. Finally, the front check valve prevents washer fluid from siphoning through the front washer nozzles after the front washer system is turned Off. When the front washer pump pressurizes and pumps washer fluid from the reservoir through

FRONT CHECK VALVE (Continued)

the front washer plumbing, the fluid pressure overrides the spring pressure applied to the check valve and unseats the valve, allowing washer fluid to flow toward the front washer nozzles. When the front washer pump stops operating, spring pressure seats the check valve and fluid flow in either direction within the front washer plumbing is prevented.

REMOVAL

(1) Disconnect and isolate the battery negative cable.

(2) Remove the wiper arms from the wiper pivots. (Refer to 8 - ELECTRICAL/FRONT WIPERS/WASHERS/FRONT WIPER ARMS - REMOVAL).

(3) Open the hood and pull the hood to plenum seal off of the forward flanges of the cowl grille cover and the plenum panel.

(4) Remove the six plastic nuts (2 short and 4 long) that secure the cowl grille cover to the studs on the cowl top panel near the base of the windshield (Fig. 2).

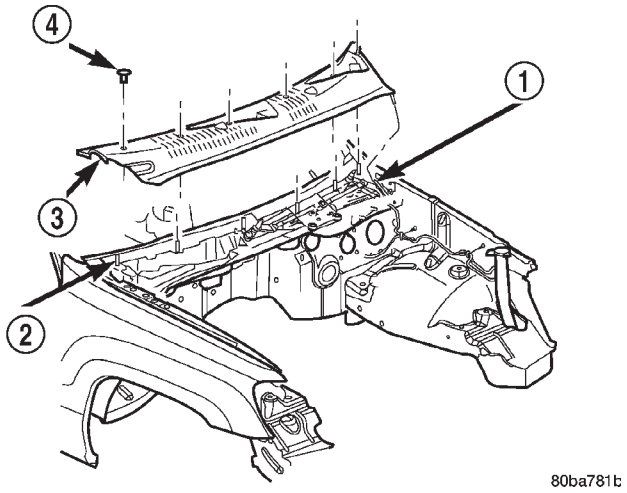

Fig. 2 Cowl Grille Cover Remove/Install

1 - WASHER HOSE CONNECTION
2 - STUDS (6)
3 - COWL GRILLE COVER
4 - PLASTIC NUT (6)

(5) Lift the left end of the cowl grille cover off of the cowl plenum panel far enough to access the front washer plumbing.

(6) Disconnect the engine compartment washer hose from the cowl grille cover washer hose at the plastic elbow connector.

(7) Remove the cowl grille cover from the cowl plenum and cowl top panels through the opening between the hood and the base of the windshield.

(8) From the underside of the cowl grille cover, disconnect the washer hoses from the three barbed nipples of the wye fitting/check valve unit.

(9) Remove the wye fitting/check valve unit from the underside of the cowl grille cover.

INSTALLATION

(1) Position the wye fitting/check valve unit to the underside of the cowl grille cover.

(2) From the underside of the cowl grille cover, reconnect the three washer hoses to the barbed nipples of the wye fitting/check valve unit.

(3) Reinstall the washer hoses for the front washer nozzles into their routing clips on the underside of the cowl grille cover.

(4) Position the cowl grille cover onto the cowl plenum and cowl top panels through the opening between the hood and the base of the windshield (Fig. 2).

(5) Lift the left end of the cowl grille cover off of the cowl plenum panel far enough to access the front washer plumbing.

(6) Reconnect the cowl grille cover washer hose to the engine compartment washer hose at the elbow connector.

(7) Install the six plastic nuts that secure the cowl grille cover to the studs on the cowl top panel near the base of the windshield. These nuts are to be installed by pushing them onto the studs in the following sequence:

(a) First, install the short nuts to the third stud from the right, then the second stud from the left.

(b) Next, install the long nuts to the right outboard stud, then the left outboard stud.

(c) Finally, install the two remaining long nuts to the third stud from the left, then the second stud from the right.

(8) Starting at the ends and working toward the center, push the hood to plenum seal onto the forward flanges of the cowl grille cover and the plenum panel.

(9) Reinstall the wiper arms onto the wiper pivots. (Refer to 8 - ELECTRICAL/FRONT WIPERS/WASHERS/FRONT WIPER ARMS - INSTALLATION).

(10) Reconnect the battery negative cable.

FRONT WASHER HOSES/ TUBES

DESCRIPTION

The front washer plumbing consists of a small diameter rubber hose that is routed from the barbed outlet nipple of the front washer pump/motor on the washer reservoir along the filler neck into the engine compartment. In the engine compartment, a molded plastic in-line fitting with barbed nipples joins the washer hose to another section of hose that is routed near the left headlamp and dash wire harness to the cowl plenum area. The engine compartment washer hose passes from the engine compartment into the cowl plenum area through a dedicated hole with a

FRONT WASHER HOSES/TUBES (Continued)

rubber grommet near the left end of the cowl plenum panel. A molded plastic elbow fitting with barbed nipples joins the engine compartment hose to the cowl grille cover hose. The cowl grille cover washer hose is routed through routing clips on the underside of the cowl grille cover to a molded plastic wye fitting with barbed nipples and an integral check valve. The cowl grille cover hose is connected to one nipple on the wye fitting and the two washer nozzle hoses are connected to the other two wye fitting nipples. The washer nozzle hoses are routed along the underside of the cowl grille cover to the two washer nozzles.

Washer hose is available for service only as roll stock, which must then be cut to length. The molded plastic washer hose fittings cannot be repaired. If these fittings are faulty or damaged, they must be replaced.

OPERATION

Washer fluid in the washer reservoir is pressurized and fed by the front washer pump/motor through the front washer system plumbing and fittings to the two front washer nozzles. Whenever routing the washer hose or a wire harness containing a washer hose, it must be routed away from hot, sharp, or moving parts; and, sharp bends that might pinch the hose must be avoided.

FRONT WASHER NOZZLE

DESCRIPTION

The two front washer nozzles have integral snap features that secure them in dedicated holes in the cowl plenum cover/grille panel located near the base of the windshield. The domed upper surface of the washer nozzle is visible on the top of the plenum cover/grille panel, and the nozzle orifice is oriented towards the windshield glass. The washer plumbing fittings for the washer nozzles are concealed beneath the cowl plenum cover/grille panel. These fluidic washer nozzles are constructed of molded plastic. The cowl plenum cover/grille panel must be removed from the vehicle to access the nozzles for service. The washer nozzles cannot be adjusted or repaired. If faulty or damaged, they must be replaced.

OPERATION

The two front washer nozzles are designed to dispense washer fluid into the wiper pattern area on the outside of the windshield glass. Pressurized washer fluid is fed to each nozzle from the washer reservoir by the front washer pump/motor through a single hose, which is attached to a barbed nipple on each front washer nozzle below the cowl plenum cover/grille panel. The washer nozzles incorporate a fluidic design, which causes the nozzle to emit the pressurized washer fluid as an oscillating stream to more effectively cover a larger area of the glass area to be cleaned.

REMOVAL

(1) Disconnect and isolate the battery negative cable.

(2) Remove the wiper arms from the wiper pivots. (Refer to 8 - ELECTRICAL/FRONT WIPERS/WASHERS/FRONT WIPER ARMS - REMOVAL).

(3) Unlatch and open the hood.

(4) Pull the hood to plenum seal off of the forward flanges of the cowl grille cover and the plenum panel.

(5) Remove the six plastic nuts (2 short and 4 long) that secure the cowl grille cover to the studs on the cowl top panel near the base of the windshield (Fig. 3).

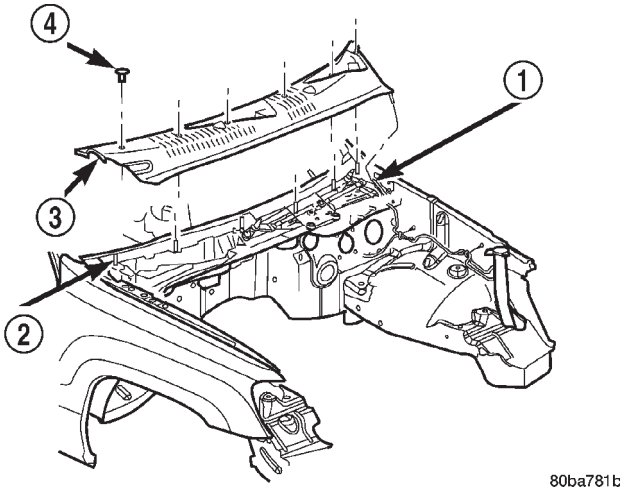

Fig. 3 Cowl Grille Cover Remove/Install

1 - WASHER HOSE CONNECTION
2 - STUDS (6)
3 - COWL GRILLE COVER
4 - PLASTIC NUT (6)

(6) Lift the left end of the cowl grille cover off of the cowl plenum panel far enough to access the front washer plumbing.

(7) Disconnect the engine compartment washer hose from the cowl grille cover washer hose at the plastic elbow connector.

(8) Remove the cowl grille cover from the cowl plenum and cowl top panels through the opening between the hood and the base of the windshield.

(9) From the underside of the cowl grille cover, disconnect the washer hose(s) from the barbed nipple(s) of the front washer nozzle(s).

(10) From the underside of the cowl grille cover, release the integral snap features of the front washer nozzle(s) and push the nozzle(s) out through the mounting hole toward the top side of the cowl grille cover.

FRONT WASHER NOZZLE (Continued)

INSTALLATION

(1) From the top side of the cowl grille cover, insert the nipple end of the front washer nozzle(s) through the mounting hole in the cowl grille cover.

(2) Push firmly and evenly on the top of the front washer nozzle until the integral snap features lock into place on the underside of the cowl grille cover.

(3) From the underside of the cowl grille cover, reconnect the washer hose(s) to the barbed nipple(s) of the front washer nozzle(s).

(4) Reinstall the washer hoses for the front washer nozzle(s) into their routing clips on the underside of the cowl grille cover.

(5) Position the cowl grille cover onto the cowl plenum and cowl top panels through the opening between the hood and the base of the windshield (Fig. 3).

(6) Lift the left end of the cowl grille cover off of the cowl plenum panel far enough to access the front washer plumbing.

(7) Reconnect the cowl grille cover washer hose to the engine compartment washer hose at the elbow connector.

(8) Install the six plastic nuts that secure the cowl grille cover to the studs on the cowl top panel near the base of the windshield. These nuts are to be installed by pushing them onto the studs in the following sequence:

(a) First, install the short nuts to the third stud from the right, then the second stud from the left.

(b) Next, install the long nuts to the right outboard stud, then the left outboard stud.

(c) Finally, install the two remaining long nuts to the third stud from the left, then the second stud from the right.

(9) Starting at the ends and working toward the center, push the hood to plenum seal onto the forward flanges of the cowl grille cover and the plenum panel.

(10) Close and latch the hood.

(11) Reinstall the wiper arms onto the wiper pivots. (Refer to 8 - ELECTRICAL/FRONT WIPERS/WASHERS/FRONT WIPER ARMS - INSTALLATION).

(12) Reconnect the battery negative cable.

FRONT WASHER PUMP/ MOTOR

DESCRIPTION

The front washer pump/motor unit is located on the outboard side and near the front of the washer reservoir, between the left front inner and outer fender panels (Fig. 4). A small permanently lubricated and sealed electric motor is coupled to the rotor-type washer pump. A seal flange with a large barbed inlet nipple on the pump housing passes through a rubber grommet seal installed in one of two dedicated mounting holes near the bottom of the washer reservoir. The front washer pump/motor unit is always mounted in the lower pump mounting hole of the reservoir. A smaller barbed outlet nipple on the pump housing connects the unit to the front washer hose. The washer pump/motor unit is retained on the reservoir by the interference fit between the barbed pump inlet nipple and the grommet seal, which is a light press fit. An integral electrical connector receptacle is located on the top of the motor housing. The front washer pump/motor unit cannot be repaired. If faulty or damaged, the entire washer pump/motor unit must be replaced.

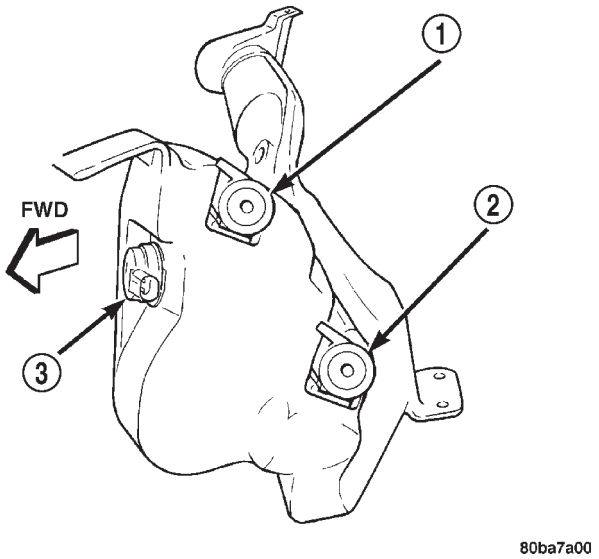

Fig. 4 Washer Pumps (Viewed from Bottom of Reservoir)

1 - REAR WASHER PUMP/MOTOR
2 - FRONT WASHER PUMP/MOTOR
3 - WASHER FLUID LEVEL SWITCH

OPERATION

The front washer pump/motor unit is connected to the vehicle electrical system through a single take out and two-cavity connector of the left headlamp and dash wire harness. The washer pump/motor is grounded at all times through a take out of the left headlamp and dash wire harness with a single eyelet terminal connector that is secured under a ground screw to the top of the left inner fender shield in the engine compartment. The front washer pump/motor receives battery current on a fused ignition switch output (run-acc) circuit through the closed contacts of the momentary front washer switch within the right multi-function switch only when the switch control stalk is pulled towards the steering wheel. Washer

FRONT WASHER PUMP/MOTOR (Continued)

fluid is gravity-fed from the washer reservoir to the inlet side of the washer pump. When the pump motor is energized, the rotor-type pump pressurizes the washer fluid and forces it through the pump outlet nipple, the front washer plumbing, and the front washer nozzles onto the windshield glass.

REMOVAL

(1) Disconnect and isolate the battery negative cable.

(2) Raise and support the vehicle.

(3) Remove the liner from the left front fender wheel house.

(4) Disconnect the left headlamp and dash wire harness connector for the front washer pump/motor from the motor connector receptacle (Fig. 5).

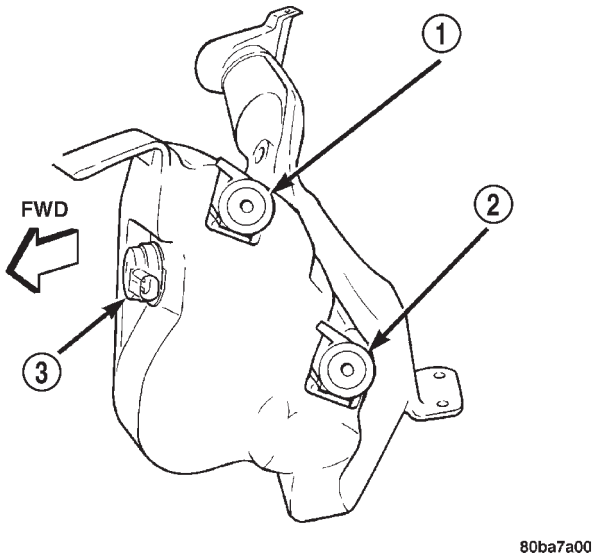

Fig. 5 Washer Pumps (Viewed from Bottom of Reservoir)

1 - REAR WASHER PUMP/MOTOR
2 - FRONT WASHER PUMP/MOTOR
3 - WASHER FLUID LEVEL SWITCH

(5) Disconnect the washer hose from the barbed outlet nipple of the front washer pump/motor and allow the washer fluid to drain into a clean container for reuse.

(6) Using a trim stick or another suitable wide flat-bladed tool, gently pry the barbed inlet nipple of the washer pump out of the rubber grommet seal in the reservoir. Care must be taken not to damage the reservoir.

(7) Remove the rubber grommet seal from the washer pump mounting hole in the washer reservoir and discard.

INSTALLATION

(1) Install a new rubber grommet seal into the washer pump mounting hole in the washer reservoir. Always use a new rubber grommet seal on the reservoir.

(2) Position the barbed inlet nipple of the washer pump to the rubber grommet seal in the reservoir (Fig. 5).

(3) Press firmly and evenly on the washer pump until the barbed inlet nipple is fully seated in the rubber grommet seal in the washer reservoir mounting hole.

(4) Reconnect the washer hose to the barbed outlet nipple of the washer pump.

(5) Reconnect the left headlamp and dash wire harness connector for the front washer pump/motor unit to the motor connector receptacle.

(6) Reinstall the liner into the left front fender wheel house.

(7) Lower the vehicle.

(8) Refill the washer reservoir with the washer fluid drained from the reservoir during the removal procedure.

(9) Reconnect the battery negative cable.

FRONT WIPER ARM

DESCRIPTION

The front wiper arms are the rigid members located between the wiper pivots that protrude from the cowl plenum cover/grille panel near the base of the windshield and the wiper blades on the windshield glass. These wiper arms feature an over-center hinge that allows easy access to the windshield glass for cleaning. The wiper arm has a die cast metal pivot end with a large mounting hole with internal serrations at one end. A molded black plastic cap fits over the wiper arm retaining nut to conceal the nut and this mounting hole following wiper arm installation. The wide end of a tapered, stamped steel channel hinges on and is secured with a hinge pin to the blade end of the wiper arm pivot end. One end of a long, rigid, stamped steel strap, with a small hole near its pivot end, is riveted and crimped within the narrow end of the stamped steel channel. The tip of the wiper blade end of this strap is bent back under itself to form a small hook. Concealed within the stamped steel channel, one end of a long spring is engaged with a wire hook on the underside of the die cast pivot end, while the other end of the spring is hooked through the small hole in the steel strap. The entire wiper arm has a satin black finish applied to all of its visible surfaces.

A wiper arm cannot be adjusted or repaired. If damaged or faulty, the entire wiper arm unit must be replaced.

FRONT WIPER ARM (Continued)

OPERATION

The front wiper arms are designed to mechanically transmit the motion from the wiper pivots to the wiper blades. The wiper arm must be properly indexed to the wiper pivot in order to maintain the proper wiper blade travel on the glass. The mounting hole formation with internal serrations in the wiper arm pivot end interlocks with the serrations on the outer circumference of the wiper pivot driver, allowing positive engagement and finite adjustment of this connection. The mounting nut locks the wiper arm to the threaded stud on the wiper pivot. The spring-loaded wiper arm hinge controls the down-force applied through the tip of the wiper arm to the wiper blade on the glass. The hook formation on the tip of the wiper arm provides a cradle for securing and latching the wiper blade pivot block to the wiper arm.

REMOVAL

(1) Lift the front wiper arm to its over-center position to hold the wiper blade off of the glass and relieve the spring tension on the wiper arm to wiper pivot connection.

(2) Carefully pry the plastic nut cap off of the pivot end of the wiper arm (Fig. 6).

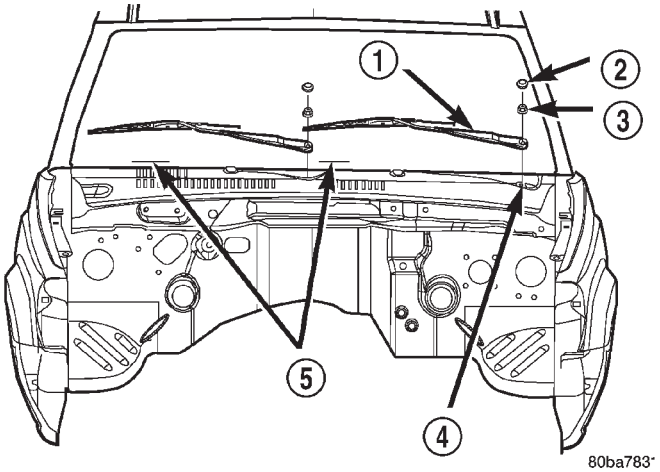

Fig. 6 Wiper Arm Remove/Install

1 - ARM AND BLADE
2 - CAP
3 - NUT
4 - PIVOT SHAFT
5 - ALIGNMENT LINE

(3) Remove the nut that secures the wiper arm to the wiper pivot shaft.

(4) Use a suitable battery terminal puller to disengage the wiper arm from the wiper pivot shaft splines (Fig. 7).

(5) Remove the front wiper arm pivot end from the wiper pivot.

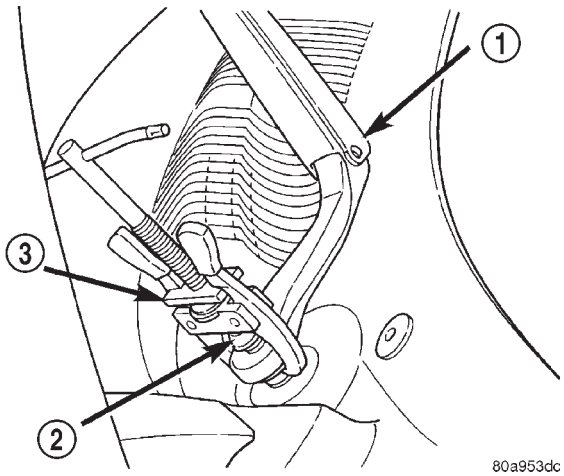

Fig. 7 Wiper Arm Puller - Typical

1 - WIPER ARM
2 - WIPER PIVOT
3 - BATTERY TERMINAL PULLER

INSTALLATION

NOTE: Be certain that the wiper motor is in the park position before attempting to install the wiper arms. Turn the ignition switch to the On position and move the right multi-function switch control knob to its Off position. If the wiper pivots move, wait until they stop moving, then turn the ignition switch back to the Off position. The wiper motor is now in its park position.

(1) The front wiper arms must be indexed to the wiper pivots with the wiper motor in the park position to be properly installed. Position the front wiper arm pivot ends onto the wiper pivots so that the lower edge of the blade is aligned with the wiper alignment lines located in the lower edge of the windshield glass (Fig. 6).

(2) Once the wiper blade is aligned, lift the wiper arm away from the windshield slightly to relieve the spring tension on the pivot end and push the pivot hole on the end of the wiper arm down over the wiper pivot shaft.

(3) Install and tighten the nut that secures the wiper arm to the wiper pivot shaft. Tighten the nut to 23.7 N·m (210 in. lbs.).

(4) Wet the windshield glass, then operate the front wipers. Turn the wiper switch to the Off position, then check for the correct wiper arm position and readjust as required.

(5) Reinstall the plastic nut cap onto the wiper arm pivot nut.

FRONT WIPER BLADE

DESCRIPTION

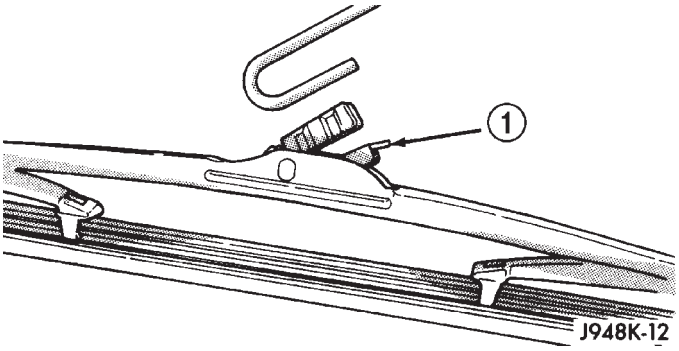

Fig. 8 Wiper Blade - Typical

1 - RELEASE TAB

Each front wiper blade is secured by an integral latching pivot block to the hook formation on the tip of the front wiper arms, and rests on the glass near the base of the windshield when the wipers are not in operation (Fig. 8). The wiper blade consists of the following components:

- **Superstructure** - The superstructure includes several stamped steel bridges and links with claw formations that grip the wiper blade element. Also included in this unit is the latching, molded plastic pivot block that secures the superstructure to the wiper arm. All of the metal components of the wiper blade have a satin black finish applied.
- **Element** - The wiper element or squeegee is the resilient rubber member of the wiper blade that contacts the glass.
- **Flexor** - The flexor is a rigid metal component running along the length of each side of the wiper element where it is gripped by the claws of the superstructure.

All Grand Cherokee models have two 52.50 centimeter (20.67 inch) long windshield wiper blades with non-replaceable rubber elements (squeegees). The wiper blades cannot be adjusted or repaired. If faulty, worn, or damaged the entire wiper blade unit must be replaced.

OPERATION

The wiper blades are moved back and forth across the glass by the wiper arms when the wipers are being operated. The wiper blade superstructure is the flexible frame that grips the wiper blade element and evenly distributes the force of the spring-loaded wiper arm along the length of the element. The combination of the wiper arm force and the flexibility of the superstructure makes the element conform to and maintain proper contact with the glass, even as the blade is moved over the varied curvature found across the glass surface. The wiper element flexor provides the claws of the blade superstructure with a rigid, yet flexible component on the element which can be gripped. The rubber element is designed to be stiff enough to maintain an even cleaning edge as it is drawn across the glass, but resilient enough to conform to the glass surface and flip from one cleaning edge to the other each time the wiper blade changes directions.

REMOVAL

NOTE: The notched retainer end of the wiper element should always be oriented towards the end of the wiper blade that is nearest to the wiper pivot.

(1) Lift the front wiper arm to raise the wiper blade and element off of the glass, until the wiper arm hinge is in its over-center position.

(2) To remove the wiper blade from the wiper arm, push the pivot block latch release tab under the tip of the arm and slide the blade away from the tip towards the pivot end of the arm far enough to disengage the pivot block from the hook (Fig. 9).

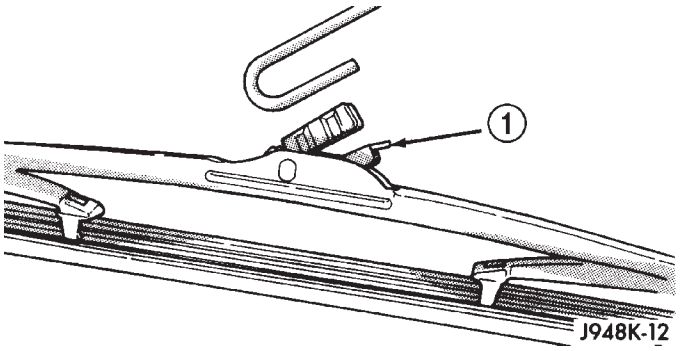

Fig. 9 Wiper Blade Remove/Install - Typical

1 - RELEASE TAB

(3) Extract the hook formation on the tip of the wiper arm from the opening in the wiper blade superstructure ahead of the wiper blade pivot block/latch unit.

CAUTION: Do not allow the wiper arm to spring back against the glass without the wiper blade in place or the glass may be damaged.

(4) Gently lower the wiper arm tip onto the glass.

INSTALLATION

NOTE: The notched retainer end of the wiper element should always be oriented towards the end of the wiper blade that is nearest to the wiper pivot.

FRONT WIPER BLADE (Continued)

(1) Lift the front wiper arm off of the windshield glass, until the wiper arm hinge is in its over-center position.

(2) Position the front wiper blade near the hook formation on the tip of the arm with the notched retainer for the wiper element oriented towards the end of the wiper arm that is nearest to the wiper pivot.

(3) Insert the hook formation on the tip of the wiper arm through the opening in the wiper blade superstructure ahead of the wiper blade pivot block/latch unit far enough to engage the pivot block with the hook (Fig. 9).

(4) Slide the wiper blade pivot block/latch up into the hook formation on the tip of the wiper arm until the latch release tab snaps into its locked position. Latch engagement will be accompanied by an audible click.

(5) Gently lower the wiper blade onto the glass.

FRONT WIPER MODULE

DESCRIPTION

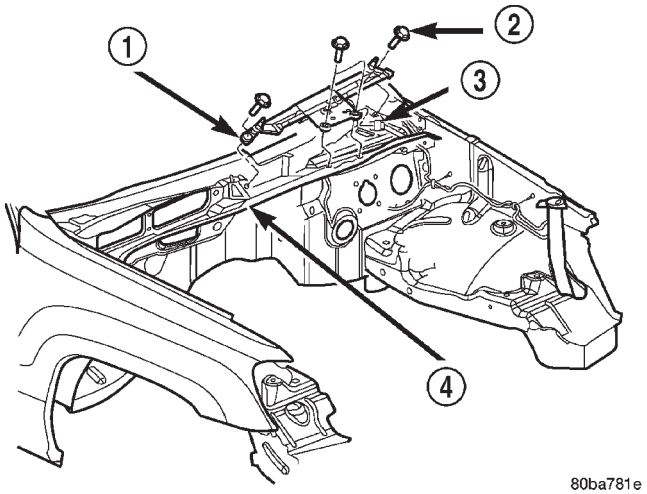

Fig. 10 Front Wiper Module

1 - FRONT WIPER MODULE
2 - SCREW (4)
3 - WIRE HARNESS CONNECTOR
4 - LOWER COWL PLENUM PANEL

The front wiper module is secured with four screws through rubber isolators to the cowl plenum panel beneath the cowl plenum cover/grille panel (Fig. 10). The ends of the wiper pivot shafts that protrude through dedicated openings in the cowl plenum cover/grille panel to drive the wiper arms and blades are the only visible components of the front wiper module. The front wiper module consists of the following major components:

- **Bracket** - The front wiper module bracket consists of a long tubular steel main member that has a stamped pivot bracket formation near each end where the two wiper pivots are secured. A stamped steel mounting plate for the wiper motor is secured with welds near the center of the main member.
- **Crank Arm** - The front wiper motor crank arm is a stamped steel unit with a slotted hole on the driven end that is secured to the wiper motor output shaft with a nut, and a ball stud secured to the drive end.
- **Linkage** - Two stamped steel drive links connect the wiper motor crank arm to the pivot lever arms. The passenger side drive link has a plastic socket-type bushing on each end. The driver side drive link has a plastic socket-type bushing on one end, and a plastic sleeve-type bushing on the other end. The socket-type bushing on one end of each drive link is snap-fit over the ball stud on the lever arm of its respective pivot. The driver side drive link sleeve-type bushing end is then fit over the motor crank arm ball stud, and the other socket-type bushing of the passenger side drive link is snap-fit over the exposed end of the wiper motor crank arm ball stud.
- **Motor** - The front wiper motor is secured with three screws to the motor mounting plate near the center of the wiper module bracket. The wiper motor output shaft passes through a hole in the module bracket, where a nut secures the wiper motor crank arm to the motor output shaft. The two-speed permanent magnet wiper motor features an integral transmission, an internal park switch, and an internal automatic resetting circuit breaker.
- **Pivots** - The two front wiper pivots are secured to the ends of the wiper module bracket. The crank arms that extend from the bottom of the pivot shafts each have a ball stud on their end. The upper end of each pivot shaft where the wiper arms will be fastened each has an externally serrated drum with a threaded stud secured to it.

The front wiper module cannot be adjusted or repaired. If any component of the module is faulty or damaged, the entire front wiper module unit must be replaced. The reinforcement bracket and stud plate are available for service replacement.

OPERATION

The front wiper module operation is controlled by the battery current inputs received by the wiper motor from the wiper on/off and wiper high/low relays. The wiper motor speed is controlled by current flow to either the low speed or the high speed set of brushes. The park switch is a single pole, single throw, momentary switch within the wiper motor that is mechanically actuated by the wiper motor

FRONT WIPER MODULE (Continued)

transmission components. The park switch alternately closes the wiper park switch sense circuit to ground or to battery current, depending upon the position of the wipers on the glass. This feature allows the motor to complete its current wipe cycle after the wiper system has been turned Off, and to park the wiper blades in the lowest portion of the wipe pattern. The automatic resetting circuit breaker protects the motor from overloads. The wiper motor crank arm, the two wiper linkage members, and the two wiper pivots mechanically convert the rotary output of the wiper motor to the back and forth wiping motion of the wiper arms and blades on the glass.

REMOVAL

(1) Disconnect and isolate the battery negative cable.

(2) Remove the front wiper arms from the wiper pivots. (Refer to 8 - ELECTRICAL/FRONT WIPERS/WASHERS/FRONT WIPER ARMS - REMOVAL).

(3) Unlatch and open the hood.

(4) Remove the hood to plenum seal from the forward flanges of the cowl grille cover and the plenum panel.

(5) Remove the six plastic nuts (2 short and 4 long) that secure the cowl grille cover to the studs on the cowl top panel near the base of the windshield (Fig. 11).

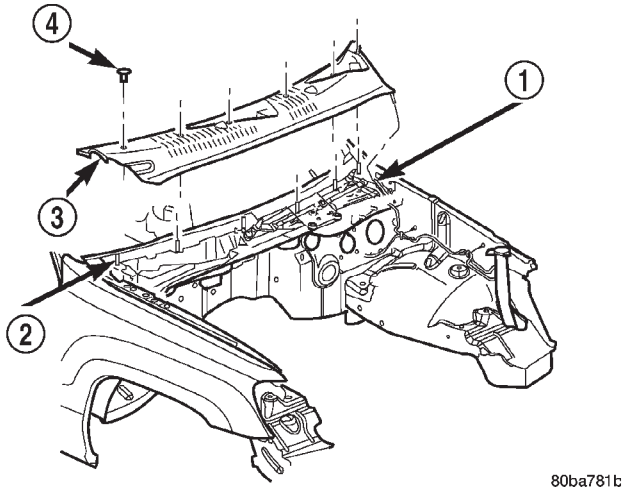

Fig. 11 Cowl Grille Cover Remove/Install

1 - WASHER HOSE CONNECTION
2 - STUDS (6)
3 - COWL GRILLE COVER
4 - PLASTIC NUT (6)

(6) Lift the left end of the cowl grille cover off of the cowl plenum panel far enough to access the front washer plumbing.

(7) Disconnect the front washer engine compartment hose from the cowl grille cover hose at the elbow connector.

(8) Remove the cowl grille cover from the cowl plenum and cowl top panels through the opening between the hood and the base of the windshield.

(9) Remove the four screws that secure the front wiper module to the cowl plenum panel (Fig. 12).

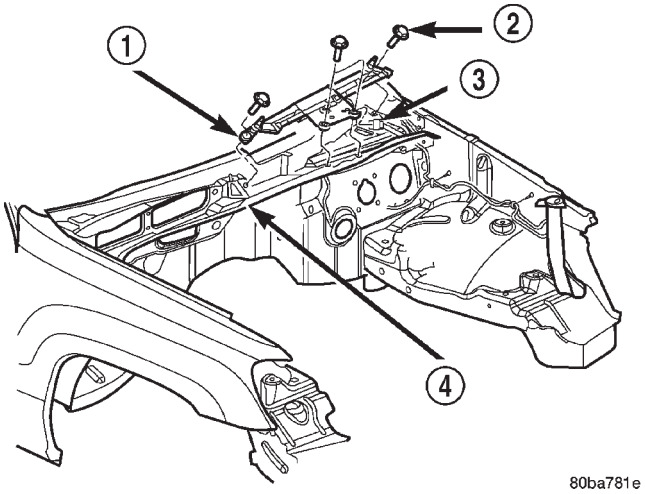

Fig. 12 Front Wiper Module Remove/Install

1 - FRONT WIPER MODULE
2 - SCREW (4)
3 - WIRE HARNESS CONNECTOR
4 - LOWER COWL PLENUM PANEL

(10) Lift the left end of the front wiper module far enough to access the front wiper motor wire harness connector.

(11) Disconnect the left headlamp and dash wire harness connector for the front wiper motor from the front wiper motor pigtail wire connector.

(12) Remove the front wiper module from the cowl plenum as a unit.

INSTALLATION

(1) Position the front wiper module into the cowl plenum as a unit (Fig. 12).

(2) Lift the left end of the front wiper module far enough to access the front wiper motor wire harness connector.

(3) Reconnect the left headlamp and dash wire harness connector for the front wiper motor to the front wiper motor pigtail wire connector.

(4) Loosely install one of the front wiper module mounting screws to the mounting hole near the pivot on the right end of the module to locate the module in the plenum.

(5) Working from left to right, install and tighten the four screws that secure the front wiper module to the cowl plenum panel. Tighten the screws to 8 N·m (72 in. lbs.).

(6) Position the cowl grille cover onto the cowl plenum and cowl top panels through the opening between the hood and the base of the windshield (Fig. 11).

FRONT WIPER MODULE (Continued)

(7) Lift the left end of the cowl grille cover off of the cowl plenum panel far enough to access the front washer plumbing.

(8) Reconnect the front washer system engine compartment hose to the cowl grille cover hose at the elbow connector.

(9) Install the six plastic nuts that secure the cowl grille cover to the studs on the cowl top panel near the base of the windshield. These nuts are to be installed by pushing them onto the studs in the following sequence:

(a) First, install the short nuts to the third stud from the right, then the second stud from the left.

(b) Next, install long nuts to the right outboard stud, then the left outboard stud.

(c) Finally, install the two remaining long nuts to the third stud from the left, then the second stud from the right.

(10) Starting at the ends and working toward the center, push the hood to plenum seal onto the forward flanges of the cowl grille cover and the plenum panel.

(11) Close and latch the hood.

(12) Reinstall the wiper arms onto the wiper pivots. (Refer to 8 - ELECTRICAL/FRONT WIPERS/WASHERS/FRONT WIPER ARMS - INSTALLATION).

(13) Reconnect the battery negative cable.

RIGHT MULTI-FUNCTION SWITCH

DESCRIPTION

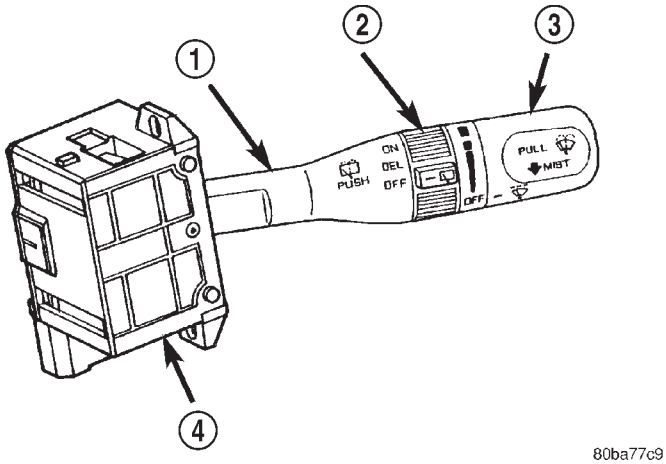

Fig. 13 Right (Wiper) Multi-Function Switch

1 - CONTROL STALK
2 - REAR WIPER CONTROL SLEEVE
3 - FRONT WIPER CONTROL KNOB
4 - RIGHT (WIPER) MULTI-FUNCTION SWITCH

The right (wiper) multi-function switch is secured to the right side of the multi-function switch mounting housing at the top of the steering column (Fig. 13). The only visible part of the right multi-function switch is the control stalk that extends from the right side of the steering column just below the steering wheel. The right multi-function switch control stalk has both nomenclature and International Control and Display Symbol icons on it, which identify its many functions. On the end of the control stalk is a plastic control knob, and just below the knob is a knurled control sleeve, both of which may be easily rotated. The remainder of the right multi-function switch is concealed beneath the steering column shrouds. The switch housing and its control stalk are constructed of molded black plastic. A single connector receptacle containing up to ten terminal pins is located on the back of the switch housing and connects the switch to the vehicle electrical system through a take out and connector of the instrument panel wire harness. The switch is secured to the multi-function switch mounting housing near the top of the steering column by two screws. The right multi-function switch is the primary control for the front and rear wiper and washer systems, and contains switches and circuitry to provide signals to the Body Control Module (BCM) and the rear wiper module to activate the following features:

- **Continuous Front Wipe Modes** - The control knob of the right multi-function switch provides two continuous front wipe switch positions, low speed or high speed.
- **Continuous Rear Wipe Mode** - The control sleeve of the right multi-function switch provides one continuous rear wipe switch position.
- **Front Washer Mode** - The control stalk of the right multi-function switch provides front washer system operation when the stalk is pulled towards the steering wheel.
- **Front Wiper Mist Mode** - The control stalk of the right multi-function switch provides a front wiper system mist mode when the stalk is pushed downwards.
- **Intermittent Front Wipe Mode** - The control knob of the right multi-function switch provides an intermittent front wipe mode with five delay interval positions.
- **Intermittent Rear Wipe Mode** - The control sleeve of the right multi-function switch provides one fixed interval intermittent rear wipe mode switch position.
- **Rear Washer Mode** - The control stalk of the right multi-function switch provides rear washer system operation when the stalk is pushed towards the instrument panel.

The right multi-function switch cannot be adjusted or repaired. If any function of the switch is faulty, or if the switch is damaged, the entire switch unit must be replaced.

RIGHT MULTI-FUNCTION SWITCH (Continued)

OPERATION

Rotating the control knob of the right multi-function switch to one of eight detent positions provides a resistor multiplexed output to the Body Control Module (BCM) and selects the Off, Low, High, or one of five Delay intervals for front wiper system operation. When the control knob is in the High position, a hard wired battery current output is also provided by the right multi-function switch to the control coil of the wiper high/low relay. Pulling the control stalk towards the steering wheel actuates the momentary single pole, single throw front washer switch and operates the front washer pump/motor. Pushing the control stalk towards the floor actuates a momentary resistor multiplexed output to the BCM and selects the Mist mode of front wiper system operation. Rotating the control sleeve on the control stalk to one of three detent positions controls hard wired battery current outputs from the right multi-function switch to the rear wiper module and selects the rear wiper system On or Delay mode operation. Pushing the control stalk towards the instrument panel actuates the momentary single pole, single throw rear washer switch and operates the rear washer pump/motor.

When the ignition switch is in the Accessory or On positions, battery current from a fuse in the Junction Block (JB) is provided through a fused ignition switch output (run-acc) circuit to the right multi-function switch. The right multi-function switch can be diagnosed using conventional diagnostic tools and procedures. Refer to the owner's manual in the vehicle glove box for more information on the features, use and operation of the right multi-function switch.

DIAGNOSIS AND TESTING - RIGHT MULTI-FUNCTION SWITCH

Be certain to perform the diagnosis for the front wiper system, front washer system, rear wiper system, and/or rear washer system before testing the right multi-function switch. (Refer to 8 - ELECTRICAL/FRONT WIPERS/WASHERS - DIAGNOSIS AND TESTING) or (Refer to 8 - ELECTRICAL/REAR WIPERS/WASHERS - DIAGNOSIS AND TESTING). Refer to the appropriate wiring information. The wiring information includes wiring diagrams, proper wire and connector repair procedures, details of wire harness routing and retention, connector pin-out information and location views for the various wire harness connectors, splices and grounds.

WARNING: ON VEHICLES EQUIPPED WITH AIRBAGS, DISABLE THE AIRBAG SYSTEM BEFORE ATTEMPTING ANY STEERING WHEEL, STEERING COLUMN, OR INSTRUMENT PANEL COMPONENT DIAGNOSIS OR SERVICE. DISCONNECT AND ISOLATE THE BATTERY NEGATIVE (GROUND) CABLE, THEN WAIT TWO MINUTES FOR THE AIRBAG SYSTEM CAPACITOR TO DISCHARGE BEFORE PERFORMING FURTHER DIAGNOSIS OR SERVICE. THIS IS THE ONLY SURE WAY TO DISABLE THE AIRBAG SYSTEM. FAILURE TO TAKE THE PROPER PRECAUTIONS COULD RESULT IN ACCIDENTAL AIRBAG DEPLOYMENT AND POSSIBLE PERSONAL INJURY.

(1) Disconnect and isolate the battery negative cable.

(2) Remove the right multi-function switch from the steering column and disconnect the instrument panel wire harness connector for the switch from the switch connector receptacle.

(3) Using an ohmmeter, check the right multi-function switch continuity and resistances at the switch terminals as shown in the Right Multi-Function Switch test chart (Fig. 14).

RIGHT MULTI-FUNCTION SWITCH (Continued)

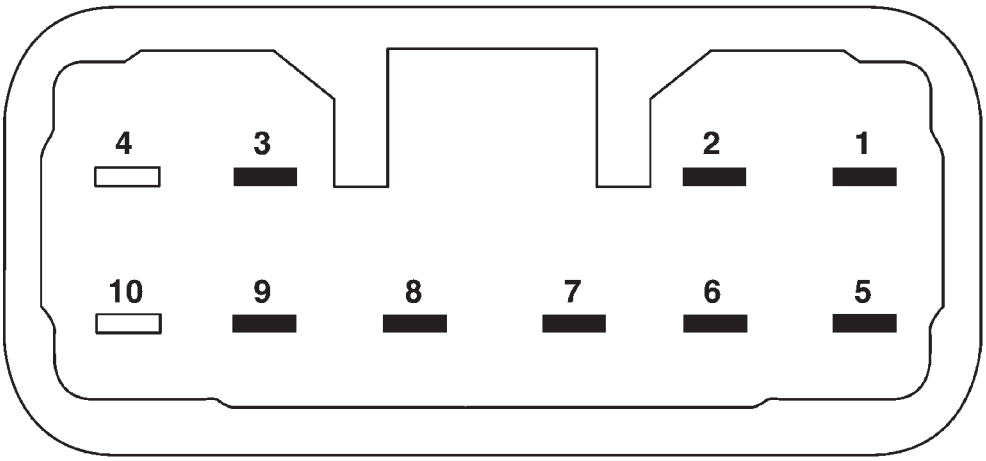

Fig. 14 Right Multi-Function Switch Tests

RIGHT (WIPER) MULTI-FUNCTION SWITCH			
FRONT WIPER/WASHER SWITCH TESTS			
SWITCH POSITION	CONTINUITY BETWEEN	RESISTANCE BETWEEN	RESISTANCE RANGE (OHMS)
Off	-	Pins 7 & 8	4286-4379
Intermittent Wipe Position 1	-	Pins 7 & 8	1445-1480
Intermittent Wipe Position 2	-	Pins 7 & 8	847-870
Intermittent Wipe Position 3	-	Pins 7 & 8	556-573
Intermittent Wipe Position 4	-	Pins 7 & 8	367-380
Intermittent Wipe Position 5	-	Pins 7 & 8	218-229
Low Speed	-	Pins 7 & 8	99-106
High Speed	Pins 1 & 9	Pins 7 & 8	99-106
Mist	-	Pins 7 & 8	49-56
Wash	Pins 1 & 3	-	-
REAR WIPER/WASHER SWITCH TESTS			
SWITCH POSITION	CONTINUITY BETWEEN	RESISTANCE BETWEEN	RESISTANCE BETWEEN
Off	-	-	-
Delay	Pins 1 & 6	-	-
On	Pins 1 & 5	-	-
Wash	Pins 1 & 5 & 6	-	-

(4) If the right multi-function switch fails any of the continuity or resistance tests, replace the faulty right multi-function switch as required.

REMOVAL

WARNING: ON VEHICLES EQUIPPED WITH AIRBAGS, DISABLE THE AIRBAG SYSTEM BEFORE ATTEMPTING ANY STEERING WHEEL, STEERING COLUMN, OR INSTRUMENT PANEL COMPONENT DIAGNOSIS OR SERVICE. DISCONNECT AND ISOLATE THE BATTERY NEGATIVE (GROUND) CABLE, THEN WAIT TWO MINUTES FOR THE AIRBAG SYSTEM CAPACITOR TO DISCHARGE BEFORE PERFORMING FURTHER DIAGNOSIS OR SERVICE. THIS IS THE ONLY SURE WAY TO DISABLE THE AIRBAG SYSTEM. FAILURE TO TAKE THE PROPER PRECAUTIONS COULD RESULT IN ACCIDENTAL AIRBAG DEPLOYMENT AND POSSIBLE PERSONAL INJURY.

RIGHT MULTI-FUNCTION SWITCH (Continued)

(1) Disconnect and isolate the battery negative cable.

(2) Remove the screw that secures the lower tilting steering column shroud to the steering column multi-function switch mounting housing (Fig. 15).

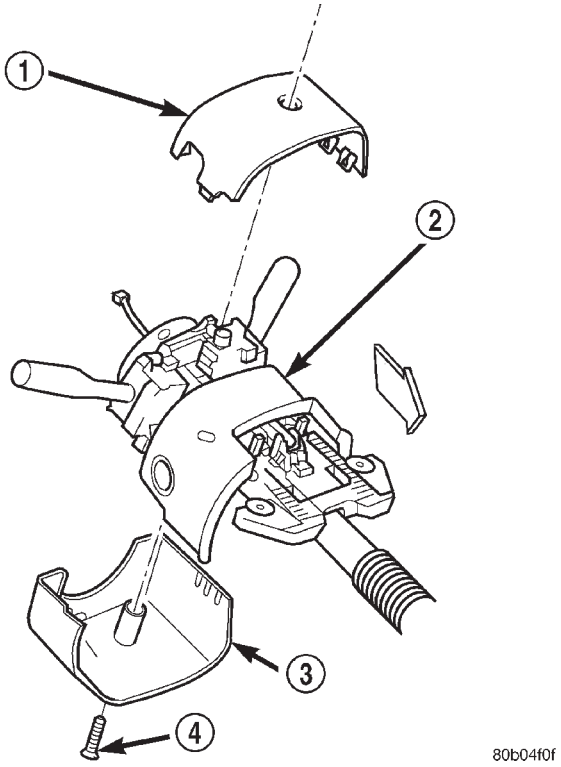

Fig. 15 Steering Column Shrouds Remove/Install

1 - UPPER TILTING COLUMN SHROUD
2 - FIXED COLUMN SHROUD
3 - LOWER TILTING COLUMN SHROUD
4 - SCREW

(3) Unsnap the two halves of the tilting steering column shroud from each other and remove both halves from the steering column.

(4) Disconnect the instrument panel wire harness connector for the right multi-function switch from the switch connector receptacle.

(5) Remove the two screws that secure the right multi-function switch to the multi-function switch mounting housing (Fig. 16).

(6) Remove the right multi-function switch from the multi-function switch mounting housing.

INSTALLATION

WARNING: ON VEHICLES EQUIPPED WITH AIRBAGS, DISABLE THE AIRBAG SYSTEM BEFORE ATTEMPTING ANY STEERING WHEEL, STEERING COLUMN, OR INSTRUMENT PANEL COMPONENT DIAGNOSIS OR SERVICE. DISCONNECT AND ISOLATE THE BATTERY NEGATIVE (GROUND) CABLE,

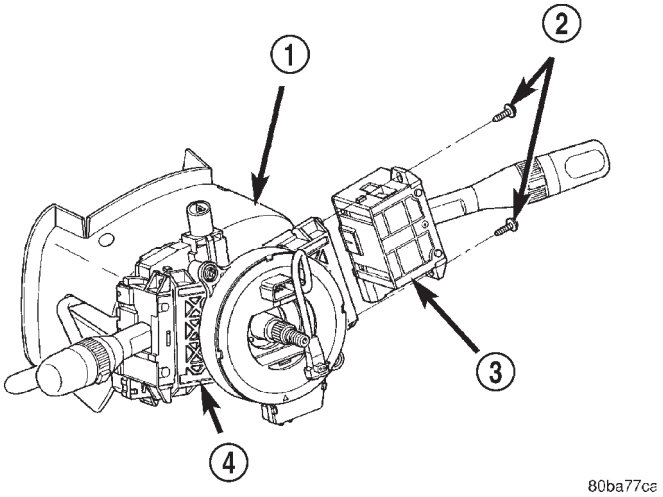

Fig. 16 Right Multi-Function Switch Remove/Install

1 - STEERING COLUMN
2 - SCREWS (2)
3 - RIGHT MULTI-FUNCTION SWITCH
4 - MULTI-FUNCTION SWITCH MOUNTING HOUSING

THEN WAIT TWO MINUTES FOR THE AIRBAG SYSTEM CAPACITOR TO DISCHARGE BEFORE PERFORMING FURTHER DIAGNOSIS OR SERVICE. THIS IS THE ONLY SURE WAY TO DISABLE THE AIRBAG SYSTEM. FAILURE TO TAKE THE PROPER PRECAUTIONS COULD RESULT IN ACCIDENTAL AIRBAG DEPLOYMENT AND POSSIBLE PERSONAL INJURY.

(1) Position the right multi-function switch onto the multi-function switch mounting housing (Fig. 16).

(2) Install and tighten the two screws that secure the right multi-function switch to the multi-function switch mounting housing. Tighten the screws to 2.5 N·m (22 in. lbs.).

(3) Reconnect the instrument panel wire harness connector for the right multi-function switch to the switch connector receptacle.

(4) Position the lower tilting steering column shroud to the underside of the steering column (Fig. 15).

(5) Install and tighten the screw that secures the lower tilting steering column shroud to the multi-function switch mounting housing. Tighten the screw to 1.9 N·m (17 in. lbs.).

(6) Position the upper tilting column shroud over the steering column with the hazard warning switch button inserted through the hole in the upper surface of the shroud. Align the upper tilting steering column shroud to the lower shroud and snap the two shroud halves together.

(7) Reconnect the battery negative cable.

WASHER FLUID LEVEL SWITCH

DESCRIPTION

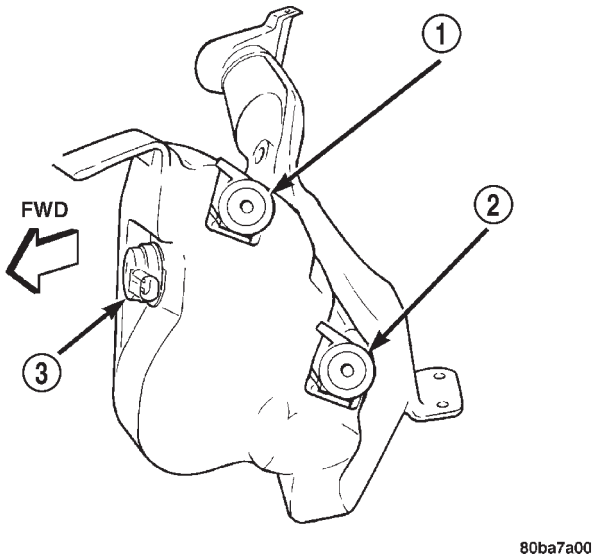

Fig. 17 Washer Fluid Level Switch (Viewed from Bottom of Reservoir)

1 - REAR WASHER PUMP/MOTOR
2 - FRONT WASHER PUMP/MOTOR
3 - WASHER FLUID LEVEL SWITCH

The washer fluid level switch is a single pole, single throw reed-type switch mounted near the front of the washer reservoir, forward of the two washer pump/motors (Fig. 17). Only the molded plastic switch mounting flange and connector receptacle are visible when the switch is installed in the reservoir. A short nipple formation extends from the inner surface of the switch mounting flange, and a barb on the nipple near the switch mounting flange is press-fit into a rubber grommet seal installed in the mounting hole of the reservoir. A small plastic float pivots on the end of a bracket that extends from the switch nipple formation. Within the float is a small magnet, which actuates the reed switch. The washer fluid level switch cannot be adjusted or repaired. If faulty or damaged, the switch must be replaced.

OPERATION

The washer fluid level switch uses a pivoting, oblong float to monitor the level of the washer fluid in the washer reservoir. The float contains a small magnet. When the float pivots, the changing proximity of its magnetic field will cause the contacts of the small, stationary reed switch to open or close. When the fluid level in the washer reservoir is at or above the float level, the float moves to a vertical position and the switch contacts open. When the fluid level in the washer reservoir falls below the pivoting float, the float moves to a horizontal position and the switch contacts close. The switch is connected to the vehicle electrical system through a dedicated take out and connector of the left headlamp and dash wire harness. The switch receives a five volt reference signal from the Body Control Module (BCM) through the washer fluid switch output circuit. The switch is grounded at all times through another take out of the left headlamp and dash wire harness with a single eyelet terminal connector that is secured under a ground screw near the top of the left front fender inner shield in the engine compartment.

When the switch closes, the BCM senses the voltage change on the circuit. The BCM is programmed to send low washer fluid messages to the Electronic Vehicle Information Center (EVIC) over the Programmable Communications Interface (PCI) data bus. The EVIC is programmed to respond to this message by displaying the Washer Fluid Low warning and sending a chime request message back to the BCM over the PCI data bus. Then the BCM generates an audible chime tone warning. A resistor within the washer fluid level switch allows the BCM to monitor and diagnose this circuit. The BCM will store a Diagnostic Trouble Code (DTC) for any fault that it detects. For retrieval of this fault information and further diagnosis of the washer fluid level switch, the BCM, the EVIC, the PCI data bus, the BCM message outputs to the EVIC that control the Low Washer Fluid indicator, or the EVIC message outputs to the BCM that control chime service, a DRBIII® scan tool and the appropriate diagnostic information are required.

REMOVAL

The washer fluid level switch can be removed from the washer reservoir without removing the reservoir from the vehicle.

(1) Disconnect and isolate the battery negative cable.

(2) Remove the one screw that secures the washer reservoir filler neck to the left inner fender shield.

(3) Raise and support the vehicle.

(4) Remove the liner from the left front fender wheel house.

(5) Disconnect the washer hose from the barbed outlet nipple of the rearmost (front) washer pump/motor unit and allow the washer fluid to drain into a clean container for reuse.

(6) Remove the two screws that secure the inboard mounting flange of the washer reservoir to the left inner wheel house.

(7) Pull the bottom of the washer reservoir rearward far enough to access the left headlamp and dash wire harness connector for the washer fluid level switch on the front of the reservoir.

WASHER FLUID LEVEL SWITCH (Continued)

(8) Disconnect the left headlamp and dash wire harness connector for the washer fluid level switch from the switch connector receptacle.

(9) Using a trim stick or another suitable wide flat-bladed tool, gently pry the barbed nipple of the washer fluid level switch out of the rubber grommet seal on the front of the reservoir (Fig. 18). Care must be taken not to damage the reservoir.

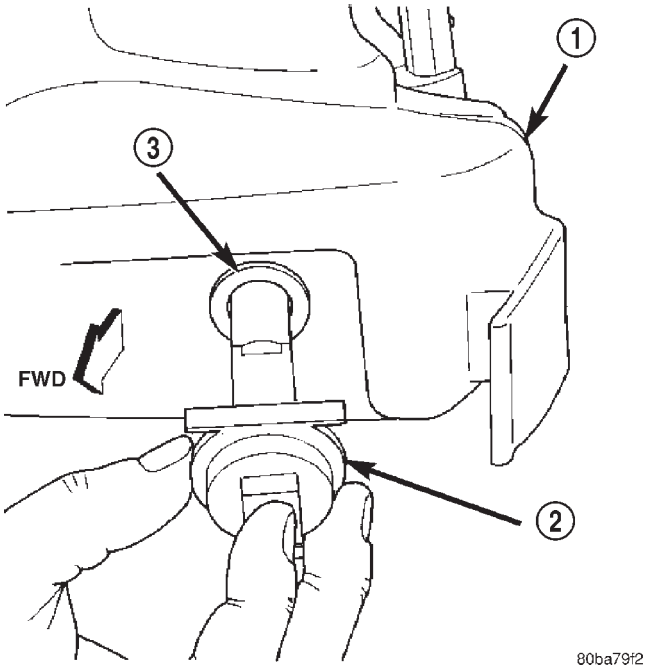

Fig. 18 Washer Fluid Level Switch Remove/Install

1 - WASHER RESERVOIR
2 - WASHER FLUID LEVEL SWITCH
3 - GROMMET SEAL

(10) Remove the washer fluid level switch and float from the washer reservoir.

(11) Remove the rubber grommet seal from the washer fluid level switch mounting hole in the washer reservoir and discard.

INSTALLATION

(1) Install a new rubber grommet seal into the washer fluid level switch mounting hole in the front of the washer reservoir. Always use a new rubber grommet seal on the reservoir.

(2) Position the float of the washer fluid level switch through the rubber grommet seal in the washer reservoir (Fig. 18). The connector receptacle of the washer fluid level sensor should be pointed downward.

(3) Press firmly and evenly on the washer fluid level switch until the barbed nipple is fully seated in the rubber grommet seal in the washer reservoir mounting hole.

(4) Reconnect the left headlamp and dash wire harness connector for the washer fluid level switch to the switch connector receptacle.

(5) Reconnect the washer hose to the barbed outlet nipple of the front washer pump/motor unit.

(6) Install and tighten the two screws that secure the inboard mounting flange of the washer reservoir to the left inner wheel house. Tighten the screws to 7.4 N·m (66 in. lbs.).

(7) Reinstall the liner into the left front fender wheel house.

(8) Lower the vehicle.

(9) Install and tighten the one screw that secures the washer reservoir filler neck to the left inner fender shield. Tighten the screw to 7.4 N·m (66 in. lbs.).

(10) Fill the washer reservoir with the washer fluid drained from the reservoir during the removal procedure.

(11) Reconnect the battery negative cable.

WASHER RESERVOIR

DESCRIPTION

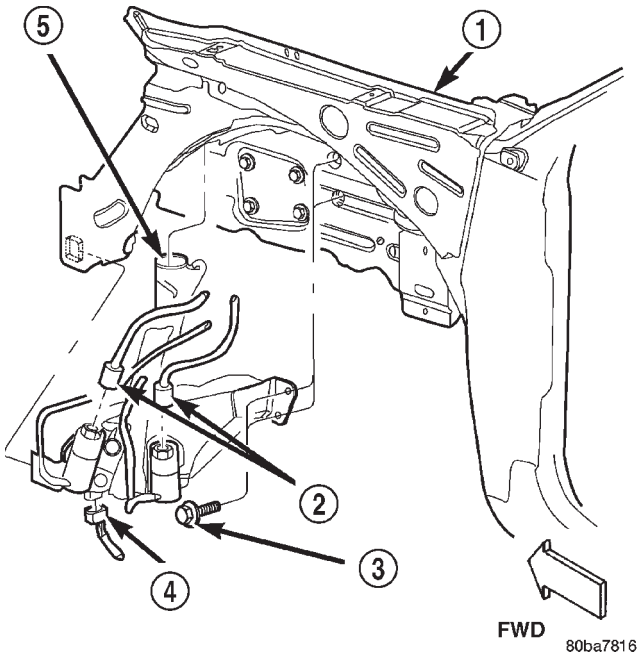

Fig. 19 Washer Reservoir

1 - LEFT FENDER INNER SHIELD
2 - SCREW (2)
3 - WASHER PUMP WIRE HARNESS CONNECTORS
4 - WASHER FLUID LEVEL SWITCH WIRE HARNESS CONNECTOR
5 - WASHER RESERVOIR

A single washer fluid reservoir is used for both the front and rear washer systems. The molded plastic

WASHER RESERVOIR (Continued)

washer fluid reservoir is concealed between the left front inner and outer fender panels, behind the inner fender liner in front of the left front wheel. The only visible component of the washer reservoir is the filler neck and cap unit, which extends through a hole in the left front wheel house extension panel into the engine compartment. A bright yellow plastic filler cap with a rubber seal and an International Control and Display Symbol icon for “Windshield Washer” and the text “Washer Fluid Only” molded into it snaps over the open end of the filler neck. The cap hinges on and is secured to a molded-in hook formation on the rear of the reservoir filler neck.

There are separate, dedicated holes on the outboard side of the reservoir provided for the mounting of the front and rear washer/pump motor units, and another dedicated hole on the front of the reservoir for the washer fluid level switch. The inboard side of the washer reservoir has a flange that is secured to the inside of the left front fender wheel house by two screws, while an integral molded tab engages a slot in the left front fender inner shield to support the outboard side of the reservoir. Another screw secures the reservoir filler neck to the left front fender inner shield near the front of the engine compartment. The left front fender wheel house inner liner must be removed to access the washer reservoir for service.

The washer reservoir cannot be repaired and, if faulty or damaged, it must be replaced. The washer reservoir, the grommet seals, and the filler cap are each available for service replacement.

OPERATION

The washer fluid reservoir provides a secure, on-vehicle storage location for a large reserve of washer fluid for operation of the front and rear washer systems. The washer reservoir filler neck provides a clearly marked and readily accessible point from which to add washer fluid to the reservoir. The front and rear washer/pump motor units are located in a sump area near the front of the reservoir to be certain that washer fluid will be available to the pumps as the fluid level in the reservoir becomes depleted. The front washer pump/motor unit is mounted in the lowest position in the sump so that the front washers will operate even after the rear washer system will no longer operate.

REMOVAL

(1) Disconnect and isolate the battery negative cable.

(2) Remove the air cleaner housing from the top of the left front fender wheel house. (Refer to 9 - ENGINE/AIR INTAKE SYSTEM/AIR CLEANER HOUSING - REMOVAL).

(3) Disconnect the two washer reservoir washer hoses from the two engine compartment washer hoses at the inline connectors located on the top of the left front fender wheel house (Fig. 20).

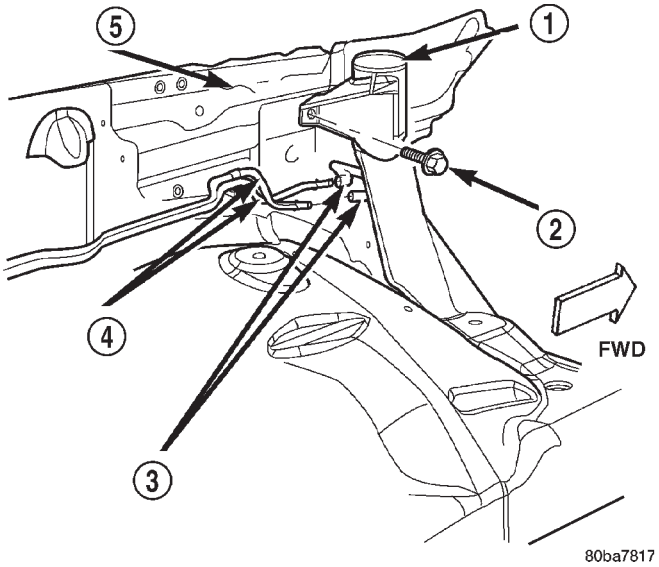

Fig. 20 Washer Reservoir Filler Neck Mounting

1 - WASHER RESERVOIR
2 - SCREW
3 - WASHER HOSES FROM PUMPS
4 - WASHER HOSES TO NOZZLES
5 - LEFT FENDER INNER SHIELD

(4) Open the washer reservoir filler cap and unsnap the filler cap hinge from the hook on the filler neck.

(5) Remove the one screw that secures the washer reservoir filler neck to the left inner fender shield.

(6) Raise and support the vehicle.

(7) Remove the liner from the left front fender wheel house.

(8) Disconnect the left headlamp and dash wire harness connectors for the two washer pump/motor units from the pump/motor connector receptacles (Fig. 21).

(9) Remove the two screws that secure the inboard mounting flange of the washer reservoir to the left front inner wheel house.

(10) Pull the bottom of the washer reservoir rearward far enough to access the left headlamp and dash wire harness connector for the washer fluid level switch on the front of the reservoir.

(11) Disconnect the left headlamp and dash wire harness connector for the washer fluid level switch from the switch connector receptacle.

(12) Pull the bottom of the washer reservoir rearward far enough to disengage the outboard mounting tab from the mounting slot on the left front inner fender shield.

(13) Rotate the washer reservoir far enough so that the inboard mounting flange clears the front suspension components, then lower the reservoir far

WASHER RESERVOIR (Continued)

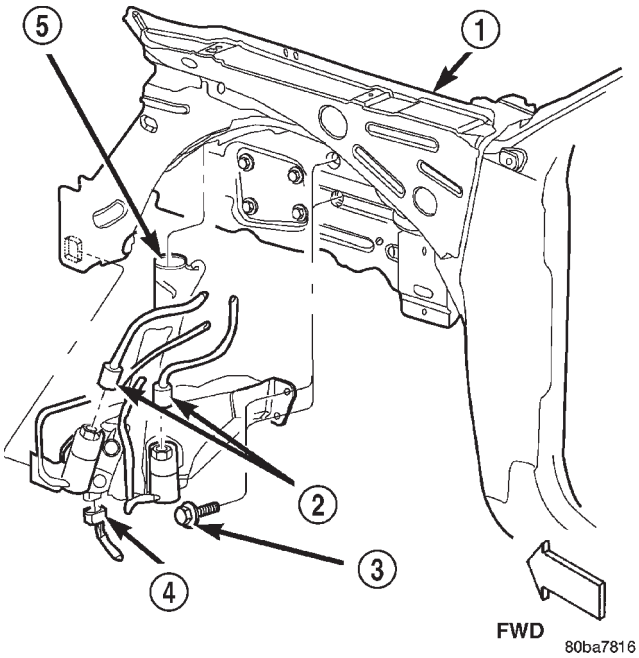

Fig. 21 Washer Reservoir

1 - LEFT FENDER INNER SHIELD
2 - SCREW (2)
3 - WASHER PUMP WIRE HARNESS CONNECTORS
4 - WASHER FLUID LEVEL SWITCH WIRE HARNESS CONNECTOR
5 - WASHER RESERVOIR

enough to disengage the filler neck from the hole in the left front wheel house extension.

(14) Remove the washer reservoir from the left front fender wheel house.

INSTALLATION

(1) Position the washer reservoir into the left front fender wheel house.

(2) Raise the washer reservoir filler neck through the hole in the left front fender wheelhouse extension into the engine compartment and rotate the reservoir as needed to orient the inboard mounting flange over the top of the front suspension components.

(3) Pull the bottom of the washer reservoir rearward far enough to engage the outboard mounting tab with the mounting slot in the left front inner fender shield (Fig. 21).

(4) Pull the bottom of the washer reservoir rearward far enough to access the washer fluid level switch connector receptacle on the front of the reservoir.

(5) Reconnect the left headlamp and dash wire harness connector for the washer fluid level switch to the switch connector receptacle.

(6) Install and tighten the two screws that secure the inboard mounting flange of the washer reservoir to the left inner wheel house. Tighten the screws to 7.4 N·m (66 in. lbs.).

(7) Reconnect the left headlamp and dash wire harness connectors for the two washer pump/motor units to the pump/motor unit connector receptacles.

(8) Reinstall the liner into the left front fender wheel house.

(9) Lower the vehicle.

(10) Install and tighten the one screw that secures the washer reservoir filler neck to the left inner fender shield (Fig. 20). Tighten the screw to 7.4 N·m (66 in. lbs.).

(11) Reinstall the washer reservoir filler cap hinge onto the hook on the filler neck and close the cap.

(12) Reconnect the two washer reservoir washer hoses to the two engine compartment washer hoses at the inline connectors located on the top of the left front fender wheel house.

(13) Reinstall the air cleaner housing onto the top of the left front fender wheel house. (Refer to 9 - ENGINE/AIR INTAKE SYSTEM/AIR CLEANER HOUSING - INSTALLATION).

(14) Reconnect the battery negative cable.

WIPER HIGH/LOW RELAY

DESCRIPTION

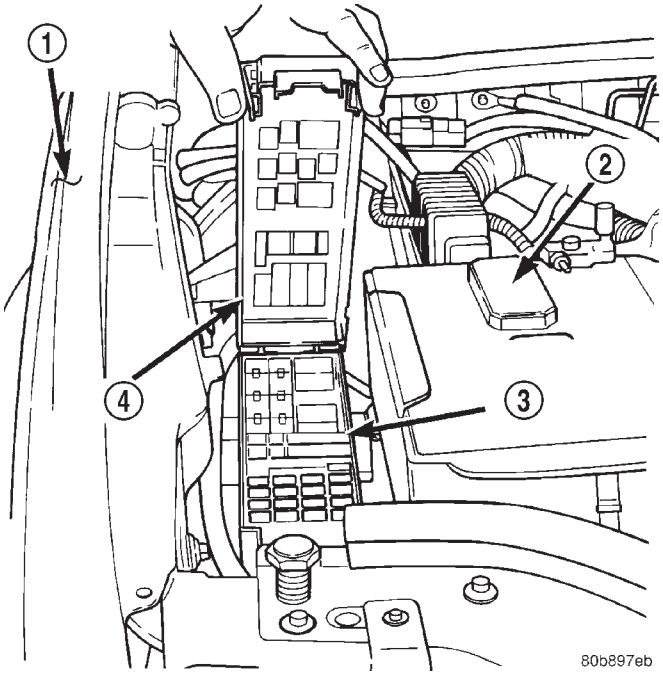

Fig. 22 Power Distribution Center

1 - RIGHT FENDER
2 - BATTERY
3 - POWER DISTRIBUTION CENTER
4 - COVER

The wiper high/low relay is located in the Power Distribution Center (PDC) near the battery in the

WIPER HIGH/LOW RELAY (Continued)

engine compartment (Fig. 22). See the fuse and relay layout label affixed to the inside surface of the PDC cover for wiper high/low relay identification and location. The wiper high/low relay is a conventional International Standards Organization (ISO) micro relay. Relays conforming to the ISO specifications have common physical dimensions, current capacities, terminal patterns, and terminal functions. The relay is contained within a small, rectangular, molded plastic housing. The relay is connected to all of the required inputs and outputs through its PDC receptacle by five male spade-type terminals that extend from the bottom of the relay base. The ISO designation for each terminal is molded into the base adjacent to the terminal. The ISO terminal designations are as follows:

- **30 (Common Feed)** - This terminal is connected to the movable contact point of the relay.
- **85 (Coil Ground)** - This terminal is connected to the ground feed side of the relay control coil.
- **86 (Coil Battery)** - This terminal is connected to the battery feed side of the relay control coil.
- **87 (Normally Open)** - This terminal is connected to the normally open fixed contact point of the relay.
- **87A (Normally Closed)** - This terminal is connected to the normally closed fixed contact point of the relay.

The wiper high/low relay cannot be adjusted or repaired. If the relay is damaged or faulty, it must be replaced.

OPERATION

The wiper high/low relay is an electromechanical switch that uses a low current input from the right multi-function switch to control a high current output to the front wiper motor. The movable common feed contact point is held against the fixed normally closed contact point by spring pressure. When the relay coil is energized, an electromagnetic field is produced by the coil windings. This electromagnetic field draws the movable relay contact point away from the fixed normally closed contact point, and holds it against the fixed normally open contact point. When the relay coil is de-energized, spring pressure returns the movable contact point back against the fixed normally closed contact point. A resistor or diode is connected in parallel with the relay coil in the relay, and helps to dissipate voltage spikes and electromagnetic interference that can be generated as the electromagnetic field of the relay coil collapses.

The wiper high/low relay terminals are connected to the vehicle electrical system through a connector receptacle in the Power Distribution Center (PDC). The inputs and outputs of the wiper high/low relay include:

- The common feed terminal (30) is connected to the common feed terminal of the wiper on/off relay in the PDC. When the wiper on/off relay is de-energized, the common feed terminal of the wiper high/low relay is connected to the wiper park switch output through the wiper park switch sense circuit. The wiper park switch output may be fused ignition switch output (run-acc) (front wipers are not parked), or ground (front wipers are parked). When the wiper on/off relay is energized, the common feed terminal of the wiper high/low relay is connected to the output of the wiper and washer circuit breaker in the Junction Block (JB) through a fused ignition switch output (run-acc) circuit.
- The coil ground terminal (85) is connected to ground at all times through a take out and eyelet terminal connector of the right headlamp and dash wire harness that is secured by a ground screw to the right fender inner shield near the PDC in the engine compartment.
- The coil battery terminal (86) is connected to the right multi-function switch through the wiper high/low relay control circuit. The right multi-function switch connects the wiper high/low relay control circuit to the fused ignition switch output (run-acc) through a fuse in the JB only when the switch control knob is in the High position.
- The normally open terminal (87) is connected to the front wiper motor high speed brush through the wiper high/low relay high speed output circuit. This circuit provides fused ignition switch output (run-acc) current to the front wiper motor high speed brush only when both the wiper high/low relay and the wiper on/off relay control coils are energized.
- The normally closed terminal (87A) is connected to the front wiper motor low speed brush through the wiper high/low relay low speed output circuit. This circuit provides fused ignition switch output (run-acc) current to the front wiper motor low speed brush whenever the wiper on/off relay control coil is energized and the wiper high/low relay control coil is de-energized, or when the wiper on/off relay is de-energized and the front wipers are not parked.

The wiper high/low relay can be diagnosed using conventional diagnostic tools and methods.

DIAGNOSIS AND TESTING - WIPER HIGH/LOW RELAY

The wiper high/low relay (Fig. 23) is located in the Power Distribution Center (PDC) between the battery and the fender on the right side of the engine compartment. See the fuse and relay layout label affixed to the inside surface of the PDC cover for wiper high/low relay identification and location.

WIPER HIGH/LOW RELAY (Continued)

Refer to the appropriate wiring information. The wiring information includes wiring diagrams, proper wire and connector repair procedures, details of wire harness routing and retention, connector pin-out information and location views for the various wire harness connectors, splices and grounds.

(1) Remove the wiper high/low relay from the PDC. (Refer to 8 - ELECTRICAL/FRONT WIPERS/WASHERS/WIPER HIGH/LOW RELAY - REMOVAL).

(2) A relay in the de-energized position should have continuity between terminals 87A and 30, and no continuity between terminals 87 and 30. If OK, go to Step 3. If not OK, replace the faulty relay.

(3) Resistance between terminals 85 and 86 (electromagnet) should be 75 ± 5 ohms. If OK, go to Step 4. If not OK, replace the faulty relay.

(4) Connect a battery to terminals 85 and 86. There should now be continuity between terminals 30 and 87, and no continuity between terminals 87A and 30. If OK, test the relay input and output circuits. Refer to RELAY CIRCUIT TEST. If not OK, replace the faulty relay.

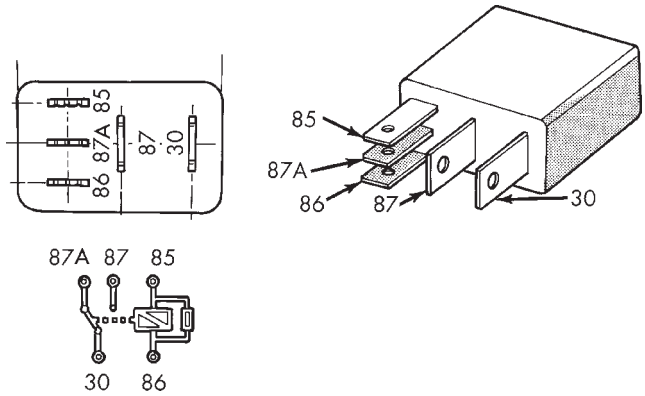

Fig. 23 Wiper High/Low Relay

30 - COMMON FEED
85 - COIL GROUND
86 - COIL BATTERY
87 - NORMALLY OPEN
87A - NORMALLY CLOSED

RELAY CIRCUIT TEST

(1) The relay common feed terminal cavity (30) is connected to the common feed terminal of the wiper on/off relay. When the wiper high/low relay is de-energized, this terminal connects the wiper on/off relay output circuit to the front wiper motor low speed brush. When the wiper high/low relay is energized, this terminal connects the wiper on/off relay output circuit to the front wiper motor high speed brush. There should be continuity between the cavity for terminal 30 of the wiper high/low relay receptacle in the PDC and the cavity for terminal 30 of the wiper on/off relay receptacle in the PDC at all times. If OK, go to Step 2. If not OK, repair the open wiper on/off relay output circuit between the PDC receptacles for the wiper high/low relay and the wiper on/off relay as required.

(2) The relay normally closed terminal (87A) is connected to the front wiper motor low speed brush through the wiper high/low relay low speed output circuit. There should be continuity between the cavity for terminal 87A of the wiper high/low relay receptacle in the PDC and the wiper high/low relay low speed output circuit cavity of the left headlamp and dash wire harness connector for the front wiper motor at all times. If OK, go to Step 3. If not OK, repair the open wiper high/low relay low speed output circuit between the PDC and the front wiper motor as required.

(3) The relay normally open terminal (87) is connected to the front wiper motor high speed brush through the wiper high/low relay high speed output circuit. There should be continuity between the cavity for terminal 87 of the wiper high/low relay receptacle in the PDC and the wiper high/low relay high speed output circuit cavity of the left headlamp and dash wire harness connector for the front wiper motor at all times. If OK, go to Step 4. If not OK, repair the open wiper high/low relay high speed output circuit between the PDC and the front wiper motor as required.

(4) The coil battery terminal (86) is connected to the right multi-function switch through the wiper high/low relay control circuit. There should be continuity between the cavity for terminal 86 of the wiper high/low relay receptacle in the PDC and the wiper high/low relay control circuit cavity of the instrument panel wire harness connector for the right multi-function switch at all times. If OK, go to Step 5. If not OK, repair the open wiper high/low relay control circuit between the PDC and the right multi-function switch as required.

(5) The coil ground terminal (85) is connected to the G108 ground through a ground circuit. There should be continuity between the cavity for terminal 85 of the wiper high/low relay and a good ground at all times. If OK, proceed to the tests for the wiper on/off relay. (Refer to 8 - ELECTRICAL/FRONT WIPERS/WASHERS/WIPER ON/OFF RELAY - DIAGNOSIS AND TESTING). If not OK, repair the open ground circuit between the PDC and ground (G108) as required.

REMOVAL

(1) Disconnect and isolate the battery negative cable.

(2) Remove the cover from the Power Distribution Center (PDC) (Fig. 24).

WIPER HIGH/LOW RELAY (Continued)

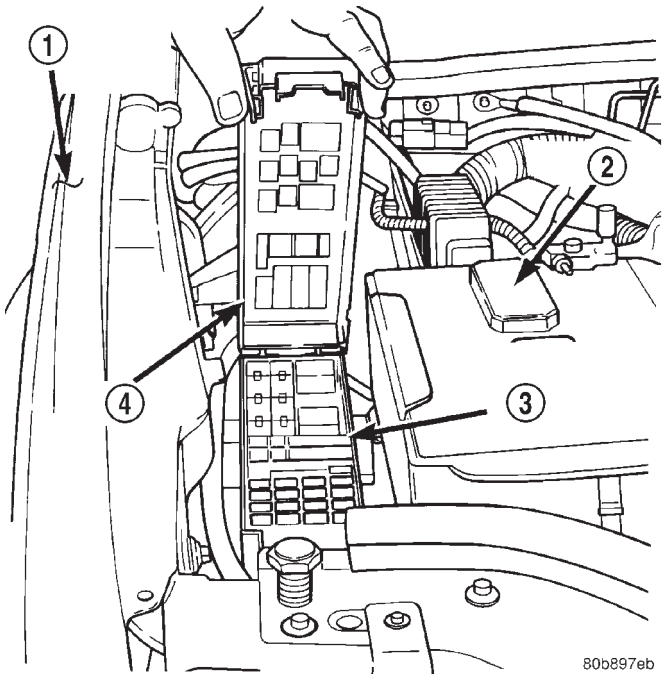

Fig. 24 Power Distribution Center

1 - RIGHT FENDER
2 - BATTERY
3 - POWER DISTRIBUTION CENTER
4 - COVER

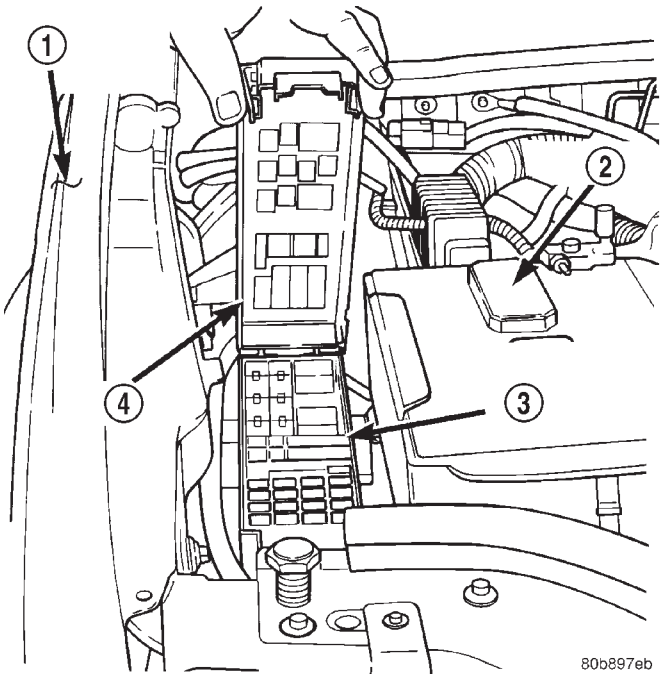

Fig. 25 Power Distribution Center

1 - RIGHT FENDER
2 - BATTERY
3 - POWER DISTRIBUTION CENTER
4 - COVER

(3) See the fuse and relay layout label affixed to the underside of the PDC cover for wiper high/low relay identification and location.

(4) Remove the wiper high/low relay by grasping it firmly and pulling it straight out from the receptacle in the PDC.

INSTALLATION

(1) See the fuse and relay layout label affixed to the underside of the PDC cover for the proper wiper high/low relay location (Fig. 24).

(2) Position the wiper high/low relay in the proper receptacle in the PDC.

(3) Align the wiper high/low relay terminals with the terminal cavities in the PDC receptacle.

(4) Push firmly and evenly on the top of the wiper high/low relay until the terminals are fully seated in the terminal cavities in the PDC receptacle.

(5) Reinstall the cover onto the PDC.

(6) Reconnect the battery negative cable.

WIPER ON/OFF RELAY

DESCRIPTION

The wiper on/off relay is located in the Power Distribution Center (PDC) near the battery in the engine compartment (Fig. 25). See the fuse and relay layout label affixed to the inside surface of the PDC cover for wiper on/off relay identification and location. The wiper on/off relay is a conventional International Standards Organization (ISO) micro relay. Relays conforming to the ISO specifications have common physical dimensions, current capacities, terminal patterns, and terminal functions. The relay is contained within a small, rectangular, molded plastic housing. The relay is connected to all of the required inputs and outputs through its PDC receptacle by five male spade-type terminals that extend from the bottom of the relay base. The ISO designation for each terminal is molded into the base adjacent to the terminal. The ISO terminal designations are as follows:

- **30 (Common Feed)** - This terminal is connected to the movable contact point of the relay.
- **85 (Coil Ground)** - This terminal is connected to the ground feed side of the relay control coil.
- **86 (Coil Battery)** - This terminal is connected to the battery feed side of the relay control coil.
- **87 (Normally Open)** - This terminal is connected to the normally open fixed contact point of the relay.
- **87A (Normally Closed)** - This terminal is connected to the normally closed fixed contact point of the relay.

WIPER ON/OFF RELAY (Continued)

The wiper on/off relay cannot be adjusted or repaired. If the relay is damaged or faulty, it must be replaced.

OPERATION

The wiper on/off relay is an electromechanical switch that uses a low current input from the Body Control Module (BCM) to control a high current output to the front wiper motor through the wiper high/low relay. The movable common feed contact point is held against the fixed normally closed contact point by spring pressure. When the relay coil is energized, an electromagnetic field is produced by the coil windings. This electromagnetic field draws the movable relay contact point away from the fixed normally closed contact point, and holds it against the fixed normally open contact point. When the relay coil is de-energized, spring pressure returns the movable contact point back against the fixed normally closed contact point. A resistor or diode is connected in parallel with the relay coil in the relay, and helps to dissipate voltage spikes and electromagnetic interference that can be generated as the electromagnetic field of the relay coil collapses.

The wiper on/off relay terminals are connected to the vehicle electrical system through a connector receptacle in the Power Distribution Center (PDC). The inputs and outputs of the wiper on/off relay include:

- The common feed terminal (30) is connected to the common feed terminal of the wiper high/low relay in the PDC. When the wiper on/off relay is de-energized, the common feed terminal is connected to the wiper motor park switch output through the wiper park switch sense circuit. The wiper park switch output may be fused ignition switch output (run-acc) (front wipers are not parked), or ground (front wipers are parked). When the wiper on/off relay is energized, the common feed terminal is connected to the output of the wiper and washer circuit breaker in the Junction Block (JB) through a fused ignition switch output (run-acc) circuit.
- The coil ground terminal (85) is connected to the BCM through the wiper on/off relay control circuit. The BCM controls this circuit through an internal pull up based upon internal programming and inputs from the right multi-function switch and the wiper park switch.
- The coil battery terminal (86) is connected to the output of the wiper and washer circuit breaker in the Junction Block (JB) through a fused ignition switch output (run-acc) circuit at all times.
- The normally open terminal (87) is connected to the output of the wiper and washer circuit breaker in the Junction Block (JB) through a fused ignition switch output (run-acc) circuit at all times. This circuit provides fused ignition switch output (run-acc) current to the wiper high/low relay only when the wiper on/off relay control coil is energized.
- The normally closed terminal (87A) is connected to the output of the front wiper motor park switch through the wiper park switch sense circuit. The wiper park switch output may be fused ignition switch output (run-acc) (front wipers are not parked), or ground (front wipers are parked). This circuit connects the output of the wiper park switch to the wiper high/low relay whenever the wiper on/off relay control coil is de-energized.

The wiper on/off relay can be diagnosed using conventional diagnostic tools and methods.

DIAGNOSIS AND TESTING - WIPER ON/OFF RELAY

The wiper on/off relay (Fig. 26) is located in the Power Distribution Center (PDC) between the battery and the fender on the right side of the engine compartment. See the fuse and relay layout label affixed to the inside surface of the PDC cover for wiper on/off relay identification and location. Refer to the appropriate wiring information. The wiring information includes wiring diagrams, proper wire and connector repair procedures, details of wire harness routing and retention, connector pin-out information and location views for the various wire harness connectors, splices and grounds.

(1) Remove the wiper on/off relay from the PDC. (Refer to 8 - ELECTRICAL/FRONT WIPERS/WASHERS/WIPER ON/OFF RELAY - REMOVAL).

(2) A relay in the de-energized position should have continuity between terminals 87A and 30, and no continuity between terminals 87 and 30. If OK, go to Step 3. If not OK, replace the faulty relay.

(3) Resistance between terminals 85 and 86 (electromagnet) should be 75 ± 5 ohms. If OK, go to Step 4. If not OK, replace the faulty relay.

(4) Connect a battery to terminals 85 and 86. There should now be continuity between terminals 30 and 87, and no continuity between terminals 87A and 30. If OK, test the relay input and output circuits. Refer to RELAY CIRCUIT TEST. If not OK, replace the faulty relay.

RELAY CIRCUIT TEST

(1) The relay common feed terminal cavity (30) is connected to the common feed terminal of the wiper high/low relay. When the wiper on/off relay is de-energized, this terminal connects the wiper on/off relay output circuit to the front wiper motor park switch output. When the wiper on/off relay is energized, this terminal connects the wiper on/off relay output circuit to the wiper and washer system circuit breaker in the Junction Block (JB). There should be continu-

WIPER ON/OFF RELAY (Continued)

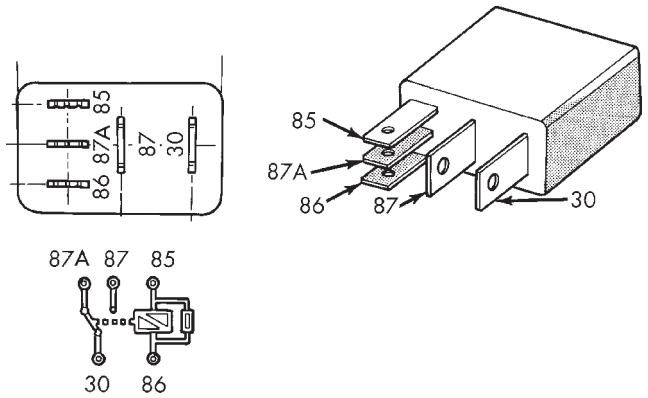

Fig. 26 Wiper On/Off Relay

30 - COMMON FEED
85 - COIL GROUND
86 - COIL BATTERY
87 - NORMALLY OPEN
87A - NORMALLY CLOSED

ity between the cavity for terminal 30 of the wiper on/off relay receptacle in the PDC and the cavity for terminal 30 of the wiper high/low relay receptacle in the PDC at all times. If OK, go to Step 2. If not OK, repair the open wiper on/off relay output circuit between the PDC receptacles for the wiper on/off relay and the wiper high/low relay as required.

(2) The relay normally closed terminal (87A) is connected to the output of the front motor park switch through the wiper park switch sense circuit. There should be continuity between the cavity for terminal 87A of the wiper on/off relay receptacle in the PDC and the wiper park switch sense circuit cavity of the left headlamp and dash wire harness connector for the front wiper motor at all times. If OK, go to Step 3. If not OK, repair the open wiper park switch sense circuit between the PDC and the front wiper motor as required.

(3) The relay normally open terminal (87) is connected to the wiper and washer system circuit breaker in the JB through the fused ignition switch output (run-acc) circuit. There should be continuity between the cavity for terminal 87 of the wiper on/off relay receptacle in the PDC and the wiper and washer system circuit breaker in the JB at all times. If OK, go to Step 4. If not OK, repair the open fused ignition switch output (run-acc) circuit between the PDC and the circuit breaker in the JB as required.

(4) The coil battery terminal (86) is also connected to the wiper and washer system circuit breaker in the JB through the fused ignition switch output (run-acc) circuit. There should be continuity between the cavity for terminal 86 of the wiper on/off relay receptacle in the PDC and the wiper and washer system circuit breaker in the JB at all times. If OK, go to Step 5. If not OK, repair the open fused ignition switch output (run-acc) circuit between the PDC and the circuit breaker in the JB as required.

(5) The coil ground terminal (85) is connected to the Body Control Module (BCM) through the wiper on/off relay control circuit. There should be continuity between the cavity for terminal 85 of the wiper on/off relay receptacle in the PDC and the wiper on/off relay control circuit cavity of the instrument panel wire harness connector (Connector C1) for the BCM at all times. If OK, proceed with diagnosis of the BCM. Use a DRBIII® scan tool and the appropriate diagnostic Information. If not OK, repair the open wiper on/off relay control circuit between the PDC and the BCM as required.

REMOVAL

(1) Disconnect and isolate the battery negative cable.

(2) Remove the cover from the Power Distribution Center (PDC) (Fig. 27).

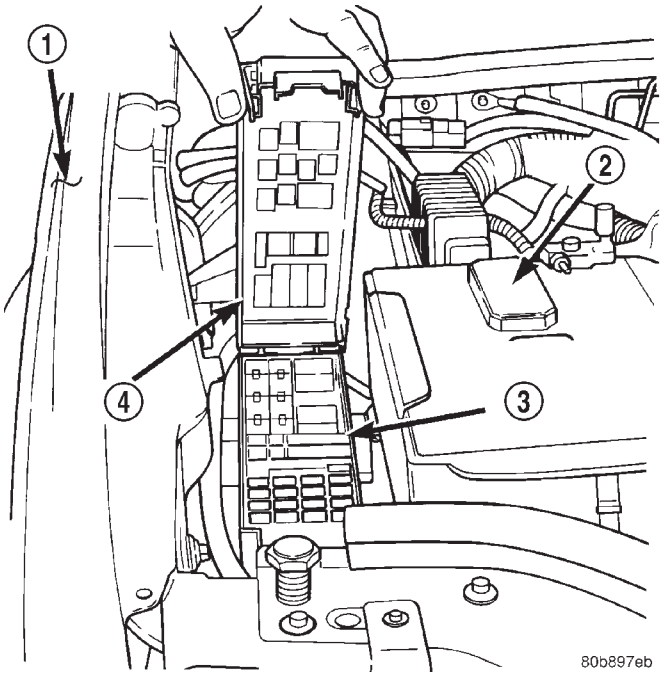

Fig. 27 Power Distribution Center

1 - RIGHT FENDER
2 - BATTERY
3 - POWER DISTRIBUTION CENTER
4 - COVER

(3) See the fuse and relay layout label affixed to the underside of the PDC cover for wiper on/off relay identification and location.

(4) Remove the wiper on/off relay by grasping it firmly and pulling it straight out from the receptacle in the PDC.

WIPER ON/OFF RELAY (Continued)

INSTALLATION

(1) See the fuse and relay layout label affixed to the underside of the PDC cover for the proper wiper on/off relay location (Fig. 27).

(2) Position the wiper on/off relay in the proper receptacle in the PDC.

(3) Align the wiper on/off relay terminals with the terminal cavities in the PDC receptacle.

(4) Push firmly and evenly on the top of the wiper on/off relay until the terminals are fully seated in the terminal cavities in the PDC receptacle.

(5) Reinstall the cover onto the PDC.

(6) Reconnect the battery negative cable.

REAR WIPERS/WASHERS

TABLE OF CONTENTS

	page
REAR WIPERS/WASHERS	
DESCRIPTION	31
OPERATION	32
DIAGNOSIS AND TESTING	33
REAR WIPER & WASHER SYSTEM	33
CLEANING	34
INSPECTION	35
REAR WASHER HOSES/TUBES	
DESCRIPTION	36
OPERATION	36
REAR WASHER NOZZLE	
DESCRIPTION	37
OPERATION	37
REMOVAL	37
INSTALLATION	38
REAR WASHER PUMP/MOTOR	
DESCRIPTION	38
OPERATION	38
REMOVAL	38
INSTALLATION	38
REAR WIPER ARM	
DESCRIPTION	39
OPERATION	39
REMOVAL	40
INSTALLATION	40
REAR WIPER BLADE	
DESCRIPTION	40
OPERATION	41
REMOVAL	41
INSTALLATION	42
REAR WIPER MODULE	
DESCRIPTION	42
OPERATION	43
REMOVAL	43
INSTALLATION	44
WIPER ARM PARK RAMP	
REMOVAL	44
INSTALLATION	44

REAR WIPERS/WASHERS

DESCRIPTION

An electrically operated fixed interval intermittent rear wiper and washer system is standard factory-installed equipment on this model. The rear wiper and washer system includes the following major components, which are described in further detail elsewhere in this service information:

- **Rear Washer Nozzle** - The rear washer nozzle is secured by a snap fit onto the top of the liftgate outer panel above the liftgate glass. The rear washer nozzle includes an integral check valve. The rear washer system plumbing is concealed within and routed through the interior of the vehicle.
- **Rear Washer Pump/Motor** - The rear washer pump/motor unit is located in a dedicated hole on the lower outboard side of the washer reservoir, ahead of the left front wheel housing. The rear washer pump mounting hole is located higher on the reservoir than the front washer pump mounting hole.
- **Rear Wiper Arm** - The single rear wiper arm is secured by a nut directly to the rear wiper module output shaft, which extends through the liftgate outer panel near the base of the liftgate glass.
- **Rear Wiper Arm Park Ramp** - The molded rubber rear wiper arm park ramp is secured with a screw to the liftgate outer panel, just below the right side of the liftgate glass. When the rear wiper system is not in operation, the rear wiper arm is parked on this ramp so that it will not interfere with or be damaged by liftgate flip-up glass operation.
- **Rear Wiper Blade** - The single rear wiper blade is secured to the rear wiper arm, and is moved off of the liftgate glass when the rear wiper system is not in operation.
- **Rear Wiper Module** - The rear wiper module output shaft is the only visible component of the rear wiper module. The remainder of the module is concealed within the liftgate beneath the liftgate glass opening. The rear wiper module includes the module bracket, the rear wiper motor, and the rear wiper module electronic control circuitry.
- **Right Multi-Function Switch** - The right (wiper) multi-function switch is secured to the right side of the multi-function switch mounting housing near the top of the steering column. Only the control stalk for the right multi-function switch is visible, the remainder of the switch is concealed beneath the steering column shrouds. The right multi-function switch contains all of the switches and control circuitry for both the front and rear wiper and washer systems.
- **Washer Reservoir** - The rear washer system shares a single reservoir with the front washer system, but has its own dedicated washer pump/motor and plumbing. The washer reservoir is concealed

REAR WIPERS/WASHERS (Continued)

between the left inner fender shield and the left outer fender panel, behind the inner fender liner and ahead of the left front wheel. The washer reservoir filler neck is the only visible portion of the reservoir, and it is accessed from the left front corner of the engine compartment.

Features of the rear wiper and washer system include the following:

- **Continuous Wipe Mode** - When the right multi-function switch control sleeve is moved to the On position, the rear wiper will be operated at a fixed speed, continual wipe cycle until the switch sleeve is moved to the Delay or Off positions, until the ignition switch is turned to the Off position, or until the liftgate flip-up glass is ajar.
- **Intermittent Wipe Mode** - When the right multi-function switch control sleeve is moved to the Delay position, the rear wiper will be operated in a fixed interval, intermittent wipe cycle until the switch sleeve is moved to the On or Off positions, until the ignition switch is turned to the Off position, until the liftgate flip-up glass is ajar, or until the right multi-function switch control stalk is pushed forward to activate the rear washer system. The intermittent wipe mode delay time has a fixed delay interval of about five to eight seconds between sweeps.
- **Washer Mode** - When the right multi-function switch control stalk is pushed forward to activate the rear washer system, washer fluid will be dispensed from the washer reservoir onto the liftgate glass through the rear washer nozzle and the rear wiper will operate in a fixed cycle (not intermittent) for as long as the rear washer pump/motor unit remains energized. When the control stalk is released from the momentary Wash position, the wipe-after-wash feature will continue to operate the rear wiper at a fixed cycle for about three additional wiper sweeps before returning to the previously selected mode.

Hard wired circuitry connects the rear wiper and washer system components to the electrical system of the vehicle. These hard wired circuits are integral to several wire harnesses, which are routed throughout the vehicle and retained by many different methods. These circuits may be connected to each other, to the vehicle electrical system and to the rear wiper and washer system components through the use of a combination of soldered splices, splice block connectors, and many different types of wire harness terminal connectors and insulators. Refer to the appropriate wiring information. The wiring information includes wiring diagrams, proper wire and connector repair procedures, further details on wire harness routing and retention, as well as pin-out and location views for the various wire harness connectors, splices and grounds.

OPERATION

The rear wiper and washer system is intended to provide the vehicle operator with a convenient, safe, and reliable means of maintaining visibility through the liftgate glass. The various components of this system are designed to convert electrical energy produced by the vehicle electrical system into the mechanical action of the wiper blade to wipe the outside surface of the glass, as well as into the hydraulic action of the washer system to apply washer fluid stored in an on-board reservoir to the area of the glass to be wiped. When combined, these components provide the means to effectively maintain clear visibility for the vehicle operator by removing excess accumulations of rain, snow, bugs, mud, or other minor debris from the outside liftgate glass surface that might be encountered while driving the vehicle under numerous types of inclement operating conditions. The vehicle operator initiates all rear wiper and washer system functions with the right multi-function switch located on the right side of the steering column, just below the steering wheel. Moving the switch control sleeve to a detent position selects the rear wiper system operating mode. Moving the switch control stalk forward to a momentary position activates the rear washer pump/motor, which dispenses washer fluid onto the liftgate glass through the rear washer nozzle and operates the rear wiper system in the fixed cycle mode for as long as the washer switch is closed plus about three wiper sweeps.

When the ignition switch is in the Accessory or On positions, battery current from a fuse in the Junction Block (JB) is provided to the right multi-function switch through a fused ignition switch output (run-acc) circuit. A separate fuse in the JB provides battery current to the electronic control circuitry of the rear wiper module through a fused B(+) circuit. When the right multi-function switch control sleeve On position is selected, the On position circuitry within the switch directs a battery current rear wiper motor control signal input to the rear wiper module electronic circuitry, which causes the rear wiper motor to run at a fixed continuous wipe cycle. When the right multi-function switch control sleeve Delay position is selected, the Delay position circuitry within the switch directs a battery current rear washer switch output signal input to the rear wiper module electronic circuitry, which causes the rear wiper motor to run at a fixed intermittent wipe cycle. When the right multi-function switch control stalk is moved to the rear Wash position, the Wash position circuitry within the switch directs battery current to the rear washer pump/motor unit, and to both the rear wiper motor control and rear washer switch output signal inputs of the rear wiper module

REAR WIPERS/WASHERS (Continued)

electronic circuitry, which causes the wiper motor to run at a fixed cycle for as long as the Wash mode is selected plus about three additional fixed wipe cycles.

The rear wiper module electronic circuitry controls the switching of battery current to the rear wiper motor brush, which controls wiper motor operation. The intermittent wipe and wipe-after-wash features of the rear wiper and washer system are both provided by the rear wiper module electronic circuitry. The rear wiper module electronic circuitry also monitors the liftgate flip-up glass ajar switch and will park the rear wiper blade off of the glass any time it senses that the liftgate flip-up glass is ajar, the ignition switch is turned to the Off position, or the right multi-function switch control sleeve is moved to the Off position. This feature ensures that the rear wiper blade will not interfere with or be damaged by the operation of the liftgate flip-up glass. However, if the ignition switch is turned to the Off position while the rear wiper is operating, the right multi-function switch control sleeve must be cycled to the Off position and back to the On or Delay position after the ignition switch is turned back On before the rear wiper will operate again.

Refer to the owner's manual in the vehicle glove box for more information on the features and operation of the rear wiper and washer system.

DIAGNOSIS AND TESTING - REAR WIPER & WASHER SYSTEM

WIPER SYSTEM

The diagnosis found here addresses an electrically inoperative rear wiper system. If the rear wiper motor operates, but the wiper does not move on the liftgate glass, replace the faulty rear wiper module. If the wiper operates, but chatters, lifts, or does not clear the glass, clean and inspect the wiper system components as required. (Refer to 8 - ELECTRICAL/ REAR WIPERS/WASHERS - INSPECTION) and (Refer to 8 - ELECTRICAL/REAR WIPERS/WASHERS - CLEANING). Refer to the appropriate wiring information. The wiring information includes wiring diagrams, proper wire and connector repair procedures, details of wire harness routing and retention, connector pin-out information and location views for the various wire harness connectors, splices and grounds.

WARNING: ON VEHICLES EQUIPPED WITH AIRBAGS, DISABLE THE AIRBAG SYSTEM BEFORE ATTEMPTING ANY STEERING WHEEL, STEERING COLUMN, OR INSTRUMENT PANEL COMPONENT DIAGNOSIS OR SERVICE. DISCONNECT AND ISOLATE THE BATTERY NEGATIVE (GROUND) CABLE, THEN WAIT TWO MINUTES FOR THE AIRBAG SYSTEM CAPACITOR TO DISCHARGE BEFORE PERFORMING FURTHER DIAGNOSIS OR SERVICE. THIS IS THE ONLY SURE WAY TO DISABLE THE AIRBAG SYSTEM. FAILURE TO TAKE THE PROPER PRECAUTIONS COULD RESULT IN ACCIDENTAL AIRBAG DEPLOYMENT AND POSSIBLE PERSONAL INJURY.

(1) Check that the interior lighting switch on the control stalk of the left multi-function switch is not in the dome lamp disable position. With all four doors and the liftgate closed, open the liftgate flip-up glass. The interior lamps should light. Close all four doors, the liftgate and the liftgate flip-up glass. Note whether the interior lamps remain lighted. They should turn off after about thirty seconds. If OK, go to Step 2. If not OK, go to Step 9.

(2) Check the fused B(+) fuse (Fuse 8 - 15 ampere) in the Junction Block (JB). If OK, go to Step 3. If not OK, repair the shorted circuit or component as required and replace the faulty fuse.

(3) Check for battery voltage at the fused B(+) fuse (Fuse 8 - 15 ampere) in the JB. If OK, go to Step 4. If not OK, repair the open fused B(+) circuit between the JB and the Power Distribution Center (PDC) as required.

(4) Check the fused ignition switch output (run-acc) fuse (Fuse 29 - 10 ampere) in the JB. If OK, go to Step 5. If not OK, repair the shorted circuit or component as required and replace the faulty fuse.

(5) Turn the ignition switch to the On position. Check for battery voltage at the fused ignition switch output (run-acc) fuse (Fuse 29 - 10 ampere) in the JB. If OK, turn the ignition switch to the Off position and go to Step 6. If not OK, repair the open fused ignition switch output (run-acc) circuit between the JB and the ignition switch as required.

(6) Disconnect and isolate the battery negative cable. Disconnect the instrument panel wire harness connector for the right multi-function switch from the switch connector receptacle. Reconnect the battery negative cable. Turn the ignition switch to the On position. Check for battery voltage at the fused ignition switch output (run-acc) circuit cavity of the instrument panel wire harness connector for the right multi-function switch. If OK, go to Step 7. If not OK, repair the open fused ignition switch output (run-acc) circuit between the right multi-function switch and the JB as required.

(7) Turn the ignition switch to the Off position. Disconnect and isolate the battery negative cable. Test the right multi-function switch. (Refer to 8 - ELECTRICAL/FRONT WIPERS/WASHERS/RIGHT MULTI-FUNCTION SWITCH - DIAGNOSIS AND TESTING). If the right multi-function switch tests OK, reconnect the instrument panel wire harness connector for the right multi-function switch to the

REAR WIPERS/WASHERS (Continued)

switch connector receptacle and go to Step 8. If the right multi-function switch does not test OK, replace the faulty switch.

(8) Remove the liftgate inner trim panel. Disconnect the liftgate wire harness connector for the rear wiper module from the module connector receptacle. Check for continuity between the ground circuit cavity of the liftgate wire harness connector for the rear wiper module and a good ground. There should be continuity. If OK, go to Step 9. If not OK, repair the open ground circuit to ground (G301) as required.

(9) Check for continuity between the liftgate flip-up glass ajar switch sense circuit cavity of the liftgate wire harness connector for the rear wiper module and a good ground. There should be continuity with the liftgate flip-up glass open, and no continuity with the liftgate flip-up glass closed. If OK, go to Step 10. If not OK, repair the liftgate flip-up glass ajar circuit as required.

(10) Reconnect the battery negative cable. Check for battery voltage at the fused B(+) circuit cavity of the liftgate wire harness connector for the rear wiper module. If OK, go to Step 11. If not OK, repair the open fused B(+) circuit between the rear wiper module and the JB as required.

(11) Turn the ignition switch to the On position. Turn the right multi-function switch control sleeve to the Delay position. Check for battery voltage at the rear washer switch output circuit cavity of the liftgate wire harness connector for the rear wiper module. If OK, go to Step 12. If not OK, repair the open rear washer switch output circuit between the rear wiper module and the right multi-function switch as required.

(12) Turn the right multi-function switch control sleeve to the On position. Check for battery voltage at the rear wiper motor control circuit cavity of the liftgate wire harness connector for the rear wiper module. If OK, replace the faulty rear wiper module. If not OK, repair the open rear wiper motor control circuit between the rear wiper module and the right multi-function switch as required.

WASHER SYSTEM

The diagnosis found here addresses an electrically inoperative rear washer system. If the rear washer pump/motor operates, but no washer fluid is emitted from the rear washer nozzle, be certain to check the fluid level in the reservoir. Also inspect the washer system components as required. (Refer to 8 - ELECTRICAL/REAR WIPERS/WASHERS - INSPECTION). Refer to the appropriate wiring information. The wiring information includes wiring diagrams, proper wire and connector repair procedures, details of wire harness routing and retention, connector pin-out information and location views for the various wire harness connectors, splices and grounds.

WARNING: ON VEHICLES EQUIPPED WITH AIRBAGS, DISABLE THE AIRBAG SYSTEM BEFORE ATTEMPTING ANY STEERING WHEEL, STEERING COLUMN, OR INSTRUMENT PANEL COMPONENT DIAGNOSIS OR SERVICE. DISCONNECT AND ISOLATE THE BATTERY NEGATIVE (GROUND) CABLE, THEN WAIT TWO MINUTES FOR THE AIRBAG SYSTEM CAPACITOR TO DISCHARGE BEFORE PERFORMING FURTHER DIAGNOSIS OR SERVICE. THIS IS THE ONLY SURE WAY TO DISABLE THE AIRBAG SYSTEM. FAILURE TO TAKE THE PROPER PRECAUTIONS COULD RESULT IN ACCIDENTAL AIRBAG DEPLOYMENT AND POSSIBLE PERSONAL INJURY.

(1) Turn the ignition switch to the On position. Turn the right multi-function switch control sleeve to the On position. Check whether the rear wiper system is operating. If OK, go to Step 2. If not OK, test and repair the rear wiper system before continuing with these tests. Refer to WIPER SYSTEM.

(2) Turn the ignition switch to the Off position. Disconnect and isolate the battery negative cable. Disconnect the left headlamp and dash wire harness connector for the rear washer pump/motor unit from the pump/motor unit connector receptacle. Check for continuity between the ground circuit cavity of the left headlamp and dash wire harness connector for the rear washer pump/motor unit and a good ground. There should be continuity. If OK, go to Step 3. If not OK, repair the open ground circuit to ground (G106) as required.

(3) Reconnect the battery negative cable. Turn the ignition switch to the On position. Push the right multi-function switch control stalk toward the instrument panel to actuate the rear washer switch. With the rear washer switch actuated, check for battery voltage at the rear washer switch output circuit cavity of the left headlamp and dash wire harness connector for the rear washer pump/motor unit. If OK, replace the faulty rear washer pump/motor unit. If not OK, repair the open rear washer switch output circuit between the rear washer pump/motor unit and the right multi-function switch as required.

CLEANING - REAR WIPER & WASHER SYSTEM

WIPER SYSTEM

The squeegee of a wiper blade exposed to the elements for a long time tends to lose its wiping effectiveness. Periodic cleaning of the squeegee is suggested to remove any deposits of salt or road film. The wiper blade, arm, and liftgate glass should only be cleaned using a sponge or soft cloth and windshield washer fluid, a mild detergent, or a non-abrasive cleaner. If the wiper blade continues to leave streaks, smears, hazing, or beading on the glass after

REAR WIPERS/WASHERS (Continued)

thorough cleaning of the squeegees and the glass, the entire wiper blade assembly must be replaced.

CAUTION: Protect the rubber squeegee of the wiper blade from any petroleum-based cleaners, solvents, or contaminants. These products can rapidly deteriorate the rubber squeegee.

WASHER SYSTEM

If the washer system is contaminated with foreign material, drain the washer reservoir by removing the front washer pump/motor from the reservoir. Clean foreign material from the inside of the washer reservoir using clean washer fluid, a mild detergent, or a non-abrasive cleaner. Flush foreign material from the washer system plumbing by first disconnecting the washer hose from the washer nozzle, then running the washer pump/motor to run clean washer fluid or water through the system. A plugged or restricted washer nozzle should be carefully back-flushed using compressed air. If the washer nozzle obstruction cannot be cleared, replace the washer nozzle.

CAUTION: Never introduce petroleum-based cleaners, solvents, or contaminants into the washer system. These products can rapidly deteriorate the rubber seals and hoses of the washer system, as well as the rubber squeegee of the wiper blade.

CAUTION: Never use compressed air to flush the washer system plumbing. Compressed air pressures are too great for the washer system plumbing components and will result in further system damage. Never use sharp instruments to clear a plugged washer nozzle or damage to the nozzle orifice and improper nozzle spray patterns will result.

INSPECTION - REAR WIPER & WASHER SYSTEM

WIPER SYSTEM

The rear wiper blade and wiper arm should be inspected periodically, not just when wiper performance problems are experienced. This inspection should include the following points:

(1) Inspect the wiper arm for any indications of damage, or contamination. If the wiper arm is contaminated with any foreign material, clean as required. (Refer to 8 - ELECTRICAL/REAR WIPERS/WASHERS - CLEANING). If a wiper arm is damaged or corrosion is evident, replace the wiper arm with a new unit. Do not attempt to repair a wiper arm that is damaged or corroded.

(2) Carefully lift the wiper arm off of the ramp. Note the action of the wiper arm hinge. The wiper arm should pivot freely at the hinge, but with no side-to-side looseness evident. If there is any binding evident in the wiper arm hinge, or there is evident side-to-side play in the wiper arm hinge, replace the wiper arm.

CAUTION: Do not allow the wiper arm to spring back against the glass without the wiper blade in place or the glass may be damaged.

(3) Once proper hinge action of the wiper arm is confirmed, check the hinge for proper spring tension. The spring tension of the wiper arm should be sufficient to cause the rubber squeegee to conform to the curvature of the glass. Replace a wiper arm if it has low or no spring tension.

(4) Inspect the wiper blade and squeegee for any indications of damage, contamination, or rubber deterioration (Fig. 1). If the wiper blade or squeegee is contaminated with any foreign material, clean them and the glass as required. (Refer to 8 - ELECTRICAL/REAR WIPERS/WASHERS - CLEANING). If after cleaning the wiper blade and the glass, the wiper blade fails to clear the glass without smearing, streaking, chattering, hazing, or beading, replace the wiper blade. Also, if a wiper blade is damaged or if the squeegee rubber is damaged or deteriorated, replace the wiper blade with a new unit. Do not attempt to repair a wiper blade that is damaged.

WASHER SYSTEM

The washer system components should be inspected periodically, not just when washer performance problems are experienced. This inspection should include the following points:

(1) Check for ice or other foreign material in the washer reservoir. If contaminated, clean and flush the washer system. (Refer to 8 - ELECTRICAL/REAR WIPERS/WASHERS - CLEANING).

(2) Inspect the washer plumbing for pinched, leaking, deteriorated, or incorrectly routed hoses and damaged or disconnected hose fittings. Replace damaged or deteriorated hoses and hose fittings. Leaking washer hoses can sometimes be repaired by cutting the hose at the leak and splicing it back together using an in-line connector fitting. Similarly, sections of deteriorated hose can be cut out and replaced by splicing in new sections of hose using in-line connector fittings. Whenever routing a washer hose or a wire harness containing a washer hose, it must be routed away from hot, sharp, or moving parts. Also, sharp bends that might pinch the washer hose must be avoided.

REAR WIPERS/WASHERS (Continued)

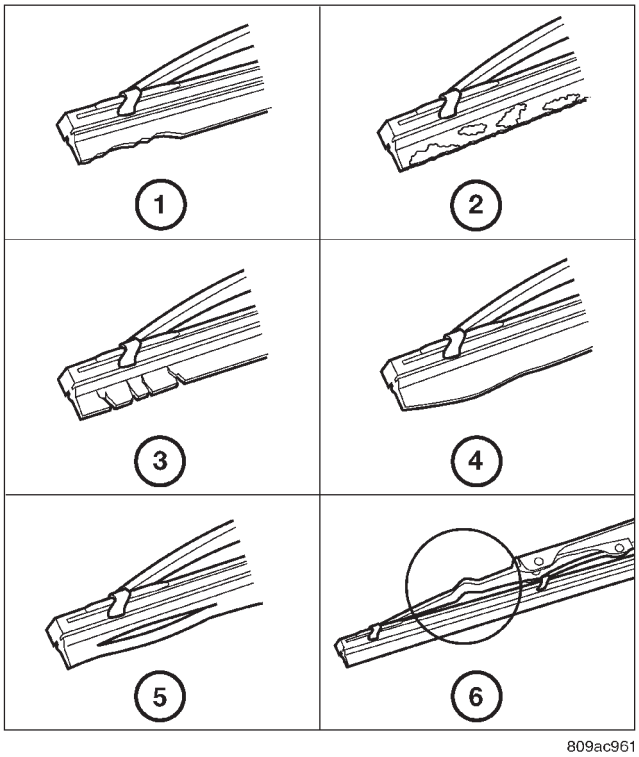

Fig. 1 Wiper Blade Inspection

1 - WORN OR UNEVEN EDGES
2 - ROAD FILM OR FOREIGN MATERIAL DEPOSITS
3 - HARD, BRITTLE, OR CRACKED
4 - DEFORMED OR FATIGUED
5 - SPLIT
6 - DAMAGED SUPPORT COMPONENTS

REAR WASHER HOSES/TUBES

DESCRIPTION

The rear washer plumbing consists of small diameter rubber hoses and molded plastic inline connector fittings (Fig. 2). The washer reservoir hose is connected to the barbed outlet nipple of the rear washer pump/motor unit below the left front wheel house extension and routed up the washer reservoir filler neck to the engine compartment. Just rearward of the washer reservoir filler neck in the engine compartment, an inline connector with barbed nipples joins the reservoir hose to the engine compartment hose. The engine compartment hose is routed along the top of the left front fender wheel house to the dash panel. The engine compartment hose passes through a hole with a rubber grommet in the dash panel into the passenger compartment. Below the instrument panel in the passenger compartment near

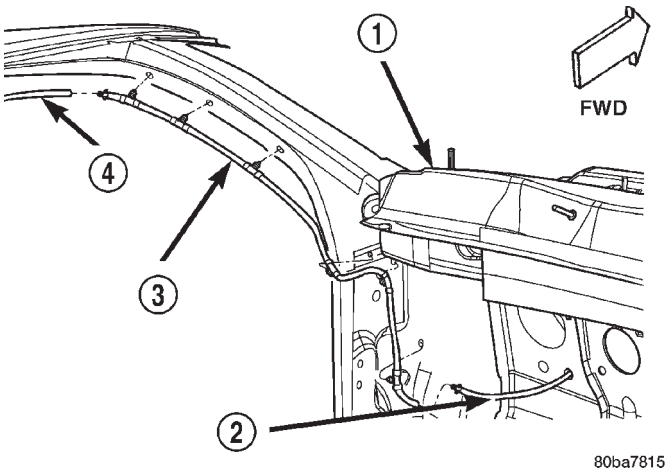

Fig. 2 Rear Washer Plumbing

1 - UPPER COWL PLENUM PANEL
2 - WASHER HOSE FROM ENGINE COMPARTMENT
3 - A-PILLAR WASHER HOSE
4 - HEADLINER WASHER HOSE

the left cowl side inner panel, another inline connector joins the engine compartment hose to the A-pillar hose. The A-pillar hose is routed up the left A-pillar to the headliner. At the headliner, an inline connector joins the A-pillar hose to the headliner hose. The headliner hose is routed above the headliner and along the left roof side rail to the rear of the vehicle. At the rear of the vehicle, the headliner hose is routed above the headliner and along the upper liftgate opening panel toward the right side of the vehicle. The headliner hose then passes through a hole with a rubber grommet in the upper liftgate opening panel and through another hole with a rubber grommet into the upper inner liftgate panel to the rear washer nozzle.

Washer hose is available for service only as roll stock, which must then be cut to length. The headliner washer hose is integral to the headliner unit and, if faulty or damaged, the headliner unit must be replaced. The molded plastic washer hose fittings cannot be repaired. If these fittings are faulty or damaged, they must be replaced.

OPERATION

Washer fluid in the washer reservoir is pressurized and fed by the rear washer pump/motor through the rear washer system plumbing and fittings to the rear washer nozzle on the liftgate outer panel above the liftgate glass. Whenever routing the washer hose or a wire harness containing a washer hose, it must be routed away from hot, sharp, or moving parts; and, sharp bends that might pinch the hose must be avoided.

REAR WASHER NOZZLE

DESCRIPTION

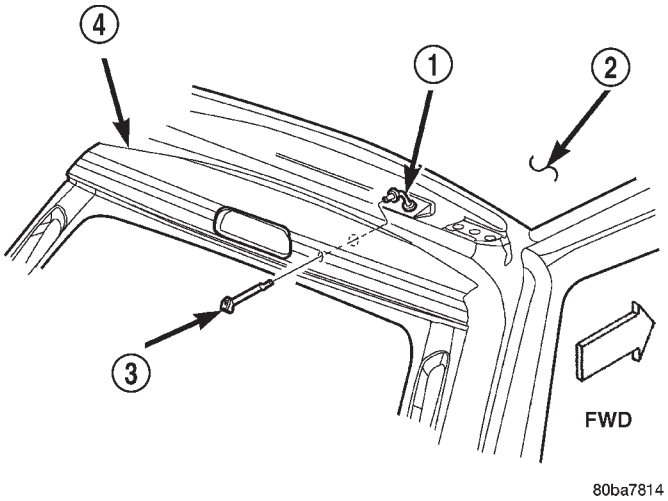

Fig. 3 Rear Washer Nozzle

1 - HEADLINER WASHER HOSE
2 - ROOF PANEL
3 - REAR WASHER NOZZLE
4 - LIFTGATE

The rear washer nozzle is a fluidic type unit that includes an integral check valve (Fig. 3). The nozzle is constructed of molded plastic and has a rubber seal and integral snap features on the back of it. The nozzle is secured by a snap fit in a dedicated mounting hole in the liftgate outer panel above the liftgate flip-up glass. Within the rear nozzle body, a small check ball is held against an integral valve seat at the inlet end of the nozzle by a small coiled spring. The rear washer nozzle and check valve unit cannot be adjusted or repaired. If faulty or damaged, the entire nozzle and check valve unit must be replaced.

OPERATION

The rear washer nozzle is designed to dispense washer fluid into the wiper pattern area on the outside of the liftgate glass. Pressurized washer fluid is fed to the nozzle from the washer reservoir by the rear washer pump/motor through a single hose, which is attached to a barbed nipple on the back of the rear washer nozzle. The rear washer nozzle incorporates a fluidic design, which causes the nozzle to emit the pressurized washer fluid as an oscillating stream to more effectively cover a larger area of the glass area to be cleaned. The integral rear nozzle check valve prevents washer fluid from draining out of the rear washer supply hoses back to the washer reservoir. This drain-back would result in a lengthy delay from when the rear washer switch is actuated until washer fluid was dispensed through the rear washer nozzle, because the rear washer pump would have to refill the rear washer plumbing from the reservoir to the nozzle. The check valve also prevents washer fluid from siphoning through the rear washer nozzle after the rear washer system is turned Off. When the rear washer pump pressurizes and pumps washer fluid from the reservoir through the rear washer plumbing, the fluid pressure overrides the spring pressure applied to the check ball within the valve and unseats the check ball, allowing washer fluid to flow to the rear washer nozzle. When the rear washer pump stops operating, spring pressure seats the check ball in the valve and fluid flow in either direction within the rear washer plumbing is prevented.

REMOVAL

The check valve for the rear washer nozzle is integral to the nozzle.

(1) Using a trim stick or another suitable wide flat-bladed tool, gently pry at the sides of the rear washer nozzle to release the snap features that secure it in the mounting hole of the liftgate outer panel.

(2) Pull the rear washer nozzle out from the liftgate outer panel far enough to access the washer supply hose (Fig. 4).

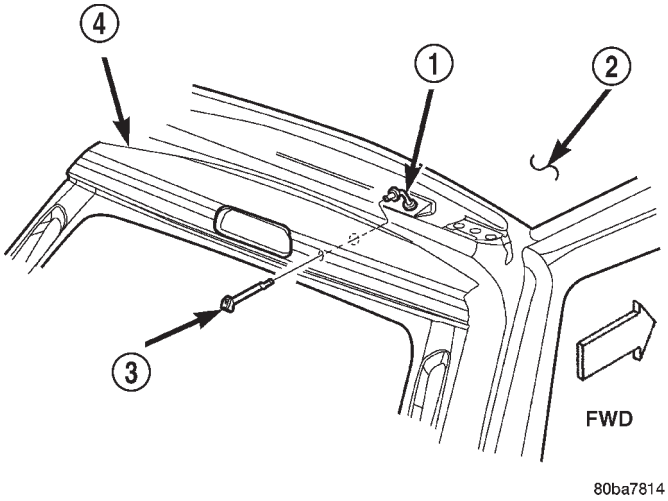

Fig. 4 Rear Washer Nozzle Remove/Install

1 - HEADLINER WASHER HOSE
2 - ROOF PANEL
3 - REAR WASHER NOZZLE
4 - LIFTGATE

(3) Disconnect the washer supply hose from the barbed nipple of the rear washer nozzle.

(4) Remove the rear washer nozzle from the liftgate.

REAR WASHER NOZZLE (Continued)

INSTALLATION

(1) Position the rear washer nozzle to the liftgate (Fig. 4).

(2) Reconnect the washer supply hose to the barbed nipple of the rear washer nozzle.

(3) Insert the rear washer nozzle supply hose and nipple into the mounting hole in the liftgate outer panel.

(4) Using hand pressure, push firmly and evenly on the rear washer nozzle until the snap features lock into place on the inside of the liftgate outer panel mounting hole.

REAR WASHER PUMP/MOTOR

DESCRIPTION

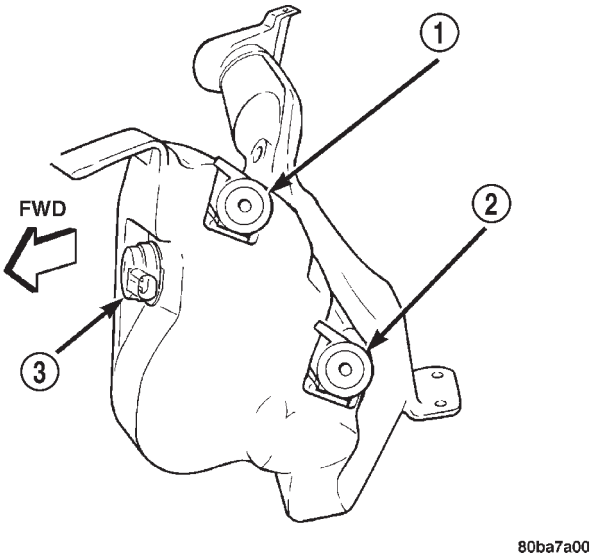

Fig. 5 Washer Pumps (Viewed from Bottom of Reservoir)

1 - REAR WASHER PUMP/MOTOR
2 - FRONT WASHER PUMP/MOTOR
3 - WASHER FLUID LEVEL SWITCH

The rear washer pump/motor unit is located on the outboard side and near the rear of the washer reservoir, between the left front inner and outer fender panels (Fig. 5). A small permanently lubricated and sealed electric motor is coupled to the rotor-type washer pump. A seal flange with a large barbed inlet nipple on the pump housing passes through a rubber grommet seal installed in one of two dedicated mounting holes near the bottom of the washer reservoir. The rear washer pump/motor unit is always mounted in the higher pump mounting hole of the reservoir. A smaller barbed outlet nipple on the pump housing connects the unit to the rear washer hose. The washer pump/motor unit is retained on the reservoir by the interference fit between the barbed pump inlet nipple and the grommet seal, which is a light press fit. An integral electrical connector receptacle is located on the top of the motor housing. The rear washer pump/motor unit cannot be repaired. If faulty or damaged, the entire washer pump/motor unit must be replaced.

OPERATION

The rear washer pump/motor unit is connected to the vehicle electrical system through a single take out and two-cavity connector of the left headlamp and dash wire harness. The washer pump/motor is grounded at all times through a take out of the left headlamp and dash wire harness with a single eyelet terminal connector that is secured under a ground screw to the top of the left inner fender shield in the engine compartment. The rear washer pump/motor receives battery current on a fused ignition switch output (run-acc) circuit through the closed contacts of the momentary rear washer switch within the right multi-function switch only when the switch control stalk is pushed towards the instrument panel. Washer fluid is gravity-fed from the washer reservoir to the inlet side of the washer pump. When the pump motor is energized, the rotor-type pump pressurizes the washer fluid and forces it through the pump outlet nipple, the rear washer plumbing, and the rear washer nozzle onto the liftgate glass.

REMOVAL

(1) Disconnect and isolate the battery negative cable.

(2) Raise and support the vehicle.

(3) Remove the liner from the left front fender wheel house.

(4) Disconnect the left headlamp and dash wire harness connector for the rear washer pump/motor from the motor connector receptacle (Fig. 6).

(5) Disconnect the washer hose from the barbed outlet nipple of the rear washer pump/motor and allow the washer fluid to drain into a clean container for reuse.

(6) Using a trim stick or another suitable wide flat-bladed tool, gently pry the barbed inlet nipple of the washer pump out of the rubber grommet seal in the reservoir. Care must be taken not to damage the reservoir.

(7) Remove the rubber grommet seal from the washer pump mounting hole in the washer reservoir and discard.

INSTALLATION

(1) Install a new rubber grommet seal into the washer pump mounting hole in the washer reservoir. Always use a new rubber grommet seal on the reservoir.

REAR WASHER PUMP/MOTOR (Continued)

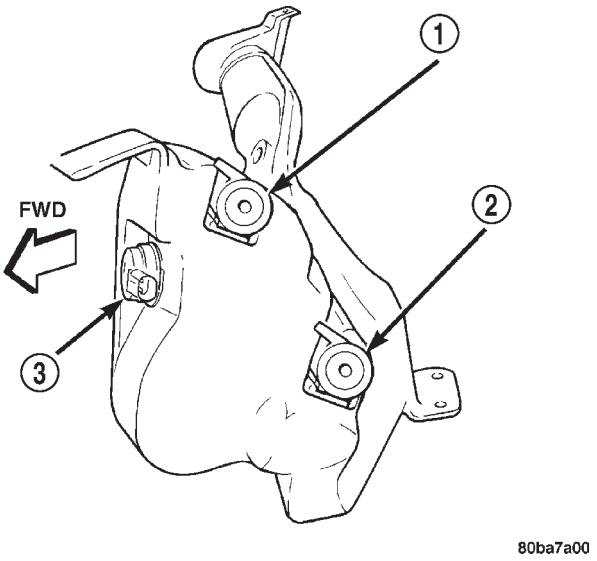

Fig. 6 Washer Pumps (Viewed from Bottom of Reservoir)

1 - REAR WASHER PUMP/MOTOR
2 - FRONT WASHER PUMP/MOTOR
3 - WASHER FLUID LEVEL SWITCH

(2) Position the barbed inlet nipple of the washer pump to the rubber grommet seal in the reservoir (Fig. 5).

(3) Press firmly and evenly on the washer pump until the barbed inlet nipple is fully seated in the rubber grommet seal in the washer reservoir mounting hole.

(4) Reconnect the washer hose to the barbed outlet nipple of the washer pump.

(5) Reconnect the left headlamp and dash wire harness connector for the rear washer pump/motor unit to the motor connector receptacle.

(6) Reinstall the liner into the left front fender wheel house.

(7) Lower the vehicle.

(8) Refill the washer reservoir with the washer fluid drained from the reservoir during the removal procedure.

(9) Reconnect the battery negative cable.

REAR WIPER ARM

DESCRIPTION

The rear wiper arm is the rigid member located between the rear wiper motor output shaft that protrudes from the outer liftgate panel near the base of the liftgate glass opening and the rear wiper blade (Fig. 7). This wiper arm features an over-center hinge that allows easy access to the liftgate and liftgate glass for cleaning. The wiper arm has a die cast metal pivot end. This pivot end has a hole in it with

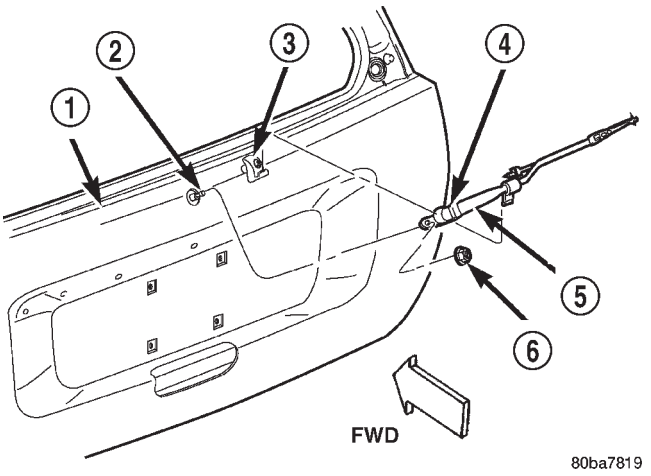

Fig. 7 Rear Wiper Arm

1 - LIFTGATE
2 - REAR WIPER MOTOR OUTPUT SHAFT
3 - PARK RAMP
4 - PIVOT COVER
5 - REAR WIPER ARM
6 - NUT

internal serrations and a plastic pivot cover is secured loosely to and pivots on the wiper arm hinge pin to conceal the wiper arm retaining nut. The wide end of a tapered, stamped steel channel is secured with a hinge pin to the pivot end of the wiper arm. One end of a long, rigid, stamped steel strap, with a small hole near its pivot end, is riveted and crimped within the narrow end of the stamped steel channel. The tip of the wiper blade end of this strap is bent back under itself to form a small hook. Concealed within the stamped steel channel, one end of a long spring is engaged with a wire hook on the underside of the die cast pivot end, while the other end of the spring is hooked through the small hole in the steel strap. A molded plastic wiper arm support is snapped onto the wiper arm strap where it exits the channel. The entire wiper arm has a satin black finish applied to all of its visible surfaces.

A wiper arm cannot be adjusted or repaired. If damaged or faulty, the entire wiper arm unit must be replaced.

OPERATION

The rear wiper arm is designed to mechanically transmit the motion from the rear wiper motor output shaft to the rear wiper blade. The wiper arm must be properly indexed to the motor output shaft in order to maintain the proper wiper blade travel on the glass. The wiper arm support is designed to lift and support the rear wiper arm and blade off of the glass when the rear wiper blade is parked. This support and the park ramp on the liftgate outer panel below the glass also provide an alignment reference

REAR WIPER ARM (Continued)

to ensure accurate rear wiper arm and blade installation. The hole with internal serrations in the wiper arm pivot end interlocks with the serrations on the outer circumference of the motor output shaft, allowing positive engagement and finite adjustment of this connection. A hex nut secures the wiper arm pivot end to the threads on the motor output shaft and the pivot cover hinges and snaps over this connection for a neat appearance. The spring-loaded wiper arm hinge controls the down-force applied through the tip of the wiper arm to the wiper blade on the glass. The hook formation on the tip of the wiper arm provides a cradle for securing and latching the wiper blade pivot block to the wiper arm.

REMOVAL

(1) Lift the rear wiper arm pivot cover by lifting it at the rear wiper motor output shaft end of the arm (Fig. 8).

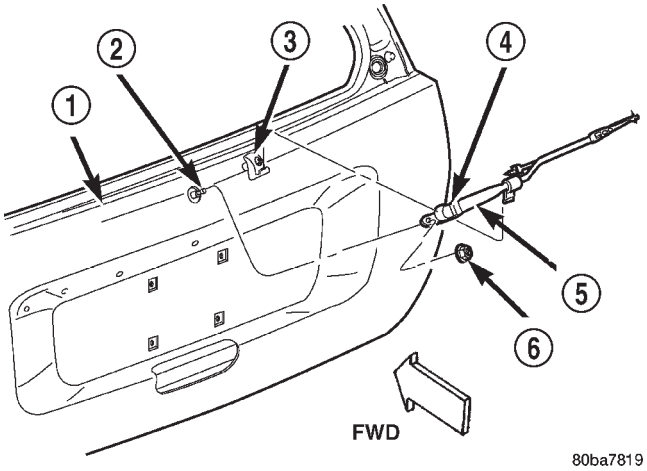

Fig. 8 Rear Wiper Arm Remove/Install

1 - LIFTGATE
2 - REAR WIPER MOTOR OUTPUT SHAFT
3 - PARK RAMP
4 - PIVOT COVER
5 - REAR WIPER ARM
6 - NUT

(2) Remove the nut that secures the rear wiper arm to the rear wiper motor output shaft.

(3) Lift the rear wiper arm far enough to engage the over-center arm hinge in its upright position to hold the wiper blade off of the liftgate.

(4) Use a battery terminal puller to disengage the wiper arm from the rear wiper motor output shaft splines (Fig. 9).

(5) Remove the rear wiper arm pivot end from the motor output shaft.

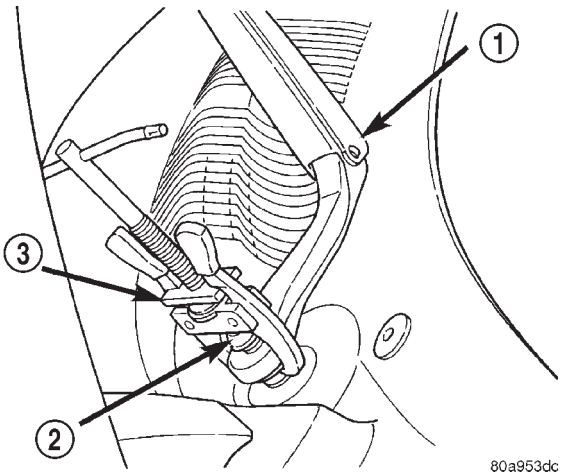

Fig. 9 Wiper Arm Puller - Typical

1 - WIPER ARM
2 - WIPER PIVOT
3 - BATTERY TERMINAL PULLER

INSTALLATION

NOTE: Always install the wiper arm and blade with the wiper motor in the Park position.

(1) The rear wiper arm must be indexed to the motor output shaft with the rear wiper motor in the park position to be properly installed. Place the wiper arm onto the liftgate with the wiper arm support positioned on the park ramp and the pivot hole on the end of the arm positioned over the rear wiper motor output shaft.

(2) Position the ridge of the wiper arm support on the liftgate park ramp in the Installation Position (Fig. 10).

(3) With the wiper arm in the Installation Position, push the pivot hole on the end of the wiper arm down over the rear wiper motor output shaft.

(4) Install and tighten the nut that secures the rear wiper arm to the rear wiper motor output shaft. Tighten the nut to 18 N·m (160 in. lbs.).

(5) Close the rear wiper arm pivot cover.

(6) Lift the rear wiper arm support away from the park ramp, then place the wiper arm support in the park ramp in the Park Position (Fig. 10).

REAR WIPER BLADE

DESCRIPTION

The rear wiper blade is secured by an integral latching pivot block to the hook formation on the tip of the rear wiper arm, and rests off the glass near the base of the liftgate glass opening when the wiper

REAR WIPER BLADE (Continued)

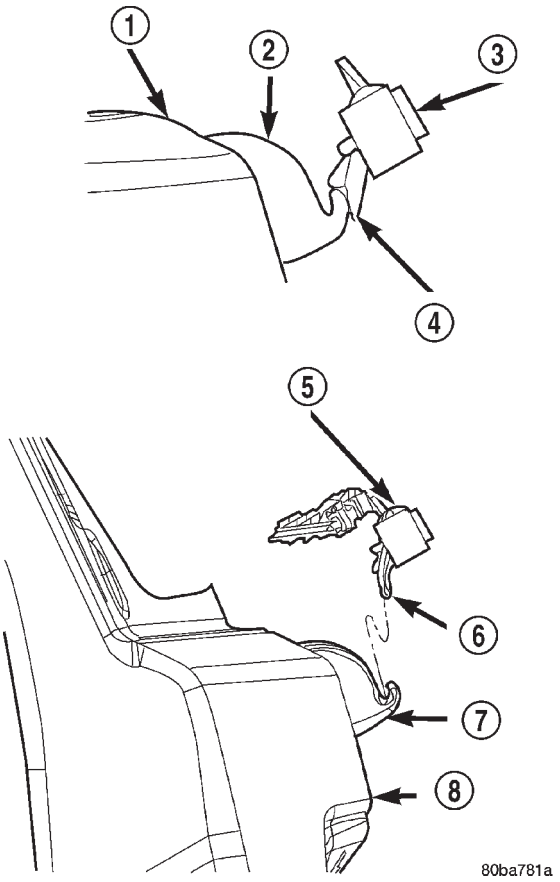

Fig. 10 Rear Wiper Arm Installation

1 - LIFTGATE
2 - PARK RAMP
3 - REAR WIPER ARM
4 - INSTALLATION POSITION
5 - REAR WIPER ARM AND BLADE
6 - PARK POSITION
7 - PARK RAMP
8 - LIFTGATE

is not in operation. The wiper blade consists of the following components:

- **Superstructure** - The superstructure includes a stamped steel bridge and plastic links with claw formations that grip the wiper blade element. Also included in this unit is the latching, molded plastic pivot block that secures the superstructure to the wiper arm. All of the metal components of the wiper blade have a satin black finish applied.
- **Element** - The wiper element or squeegee is the resilient rubber member of the wiper blade that contacts the glass.
- **Flexor** - The flexor is a rigid metal component running along the length of each side of the wiper element where it is gripped by the claws of the superstructure.

All Grand Cherokee models have a single 31.00 centimeter (12.20 inch) rear wiper blade with a non-replaceable rubber element (squeegee). The wiper blade cannot be adjusted or repaired. If faulty, worn, or damaged the entire wiper blade unit must be replaced.

OPERATION

The wiper blade is moved back and forth across the glass by the wiper arm when the wiper system is in operation. The wiper blade superstructure is the flexible frame that grips the wiper blade element and evenly distributes the force of the spring-loaded wiper arm along the length of the element. The combination of the wiper arm force and the flexibility of the superstructure makes the element conform to and maintain proper contact with the glass, even as the blade is moved over the varied curvature found across the glass surface. The wiper element flexor provides the claws of the blade superstructure with a rigid, yet flexible component on the element which can be gripped. The rubber element is designed to be stiff enough to maintain an even cleaning edge as it is drawn across the glass, but resilient enough to conform to the glass surface and flip from one cleaning edge to the other each time the wiper blade changes directions.

REMOVAL

NOTE: The notched retainer end of the wiper element should always be oriented towards the end of the wiper blade that is nearest to the wiper motor output shaft.

(1) Disengage the rear wiper arm support from the rubber rear wiper arm park ramp on the right side of the liftgate just below the liftgate glass.

(2) Lift the rear wiper arm to engage the arm hinge in its over-center position with the wiper blade and element off of the liftgate and the glass.

(3) To remove the wiper blade from the wiper arm, push the pivot block latch release tab under the tip of the arm and slide the blade away from the tip towards the pivot end of the arm far enough to disengage the pivot block from the hook (Fig. 11).

REAR WIPER BLADE (Continued)

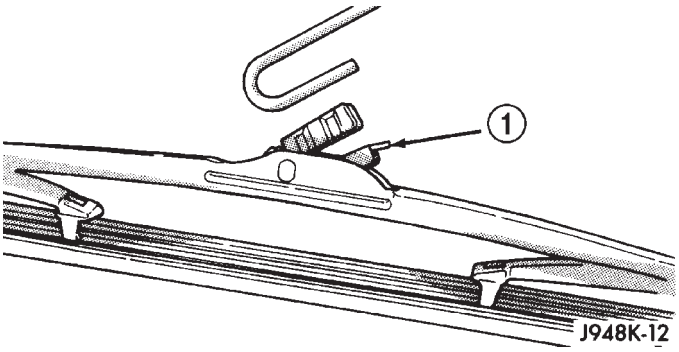

Fig. 11 Wiper Blade Remove/Install - Typical

1 - PIVOT BLOCK LATCH RELEASE TAB

(4) Extract the hook formation on the tip of the wiper arm from the opening in the wiper blade superstructure ahead of the wiper blade pivot block/latch unit.

CAUTION: Do not allow the wiper arm to spring back against the liftgate or the glass without the wiper blade in place or they may be damaged.

(5) Gently lower the wiper arm and place the arm support in the park ramp.

INSTALLATION

NOTE: The notched retainer end of the wiper element should always be oriented towards the end of the wiper blade that is nearest to the wiper motor output shaft.

(1) Lift the rear wiper arm off of the liftgate park ramp.

(2) Position the rear wiper blade near the hook formation on the tip of the arm with the notched retainer for the wiper element oriented towards the end of the wiper arm that is nearest to the wiper motor output shaft.

(3) Insert the hook formation on the tip of the wiper arm through the opening in the wiper blade superstructure ahead of the wiper blade pivot block/latch unit far enough to engage the pivot block with the hook (Fig. 11).

(4) Slide the wiper blade pivot block/latch up into the hook formation on the tip of the wiper arm until the latch release tab snaps into its locked position.

(5) Gently lower the wiper arm and place the arm support in the park ramp.

REAR WIPER MODULE

DESCRIPTION

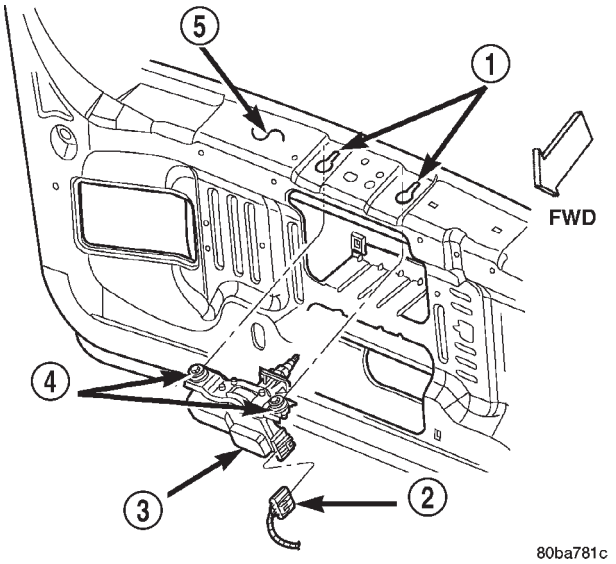

Fig. 12 Rear Wiper Module

1 - KEYED SLOTS
2 - LIFTGATE WIRE HARNESS CONNECTOR
3 - REAR WIPER MODULE
4 - NUT (2)
5 - LIFTGATE INNER PANEL

The rear wiper module is concealed within the liftgate, below the liftgate glass and behind the liftgate trim panel (Fig. 12). The end of the motor output shaft that protrudes through the liftgate outer panel to drive the rear wiper arm and blade is the only visible component of the rear wiper module. A rubber gasket, a bezel, and a nut seal and secure the motor output shaft to the liftgate outer panel. A molded plastic nut cover snaps onto the bezel to conceal the nut and improve appearance. The rear wiper module consists of the following major components:

- **Bracket** - The rear wiper module bracket consists of a stamped steel mounting plate for the wiper motor that is secured with screws to the wiper motor and to the liftgate inner panel.
- **Electronic Controls** - The rear wiper module electronic controls include the rear wiper system electronic logic and rear wiper motor electronic controls. The electronic controls for the motor include an electronic speed control that speeds the wiper blade near the center of the glass, but slows the wiper blade during directional reversals at each end of the wipe pattern and during wiper blade off-the-glass parking for quieter operation.
- **Motor** - The permanent magnet rear wiper motor is secured with screws to the rear wiper mod-

REAR WIPER MODULE (Continued)

ule bracket. The wiper motor includes an integral transmission, and the motor output shaft.

The rear wiper module cannot be adjusted or repaired. If any component of the module is faulty or damaged, the entire rear wiper module unit must be replaced. The motor output shaft gasket, bezel, nut, and nut cover are available for service replacement.

OPERATION

The rear wiper module receives non-switched battery current through a fuse in the Junction Block (JB) and is grounded at all times. The rear wiper module operation is controlled by the vehicle operator through battery current signal inputs received by the rear wiper module electronic controls from the right multi-function switch on the steering column. The module also receives an external control input from the liftgate flip-up glass ajar switch circuit. The rear wiper module electronic control logic uses these inputs, its internal inputs, and its programming to provide continuous wipe, delay wipe, wipe-after-wash and off-the-glass wiper blade parking. The wiper blade cycling is controlled by the rear wiper module electronic controls, which control current flow to the wiper motor brushes. The wiper motor transmission converts the rotary output of the wiper motor to the back and forth wiping motion of the rear wiper arm and blade on the liftgate glass.

REMOVAL

(1) Disconnect and isolate the battery negative cable.

(2) Remove the rear wiper arm from the rear wiper motor output shaft. (Refer to 8 - ELECTRICAL/REAR WIPERS/WASHERS/REAR WIPER ARM - REMOVAL).

(3) Use a door trim panel removal tool to gently pry at the base of the nut cover where it meets the wiper motor output shaft bezel and gasket on the outer liftgate panel until it unsnaps from the bezel (Fig. 13). Be certain to use proper caution to protect the outer liftgate panel and its paint finish from damage during this procedure.

(4) Remove the nut that secures the rear wiper motor output shaft to the outer liftgate panel.

(5) Remove the bezel and gasket from the rear wiper motor output shaft.

(6) Remove the trim panel from the inside of the liftgate. (Refer to 23 - BODY/DECKLID/HATCH/LIFTGATE/TAILGATE/TRIM PANEL - REMOVAL).

(7) Disconnect the liftgate wire harness connector for the rear wiper module from the module connector receptacle (Fig. 14).

(8) Loosen the two nuts that secure the rear wiper module mounting bracket to the liftgate inner panel.

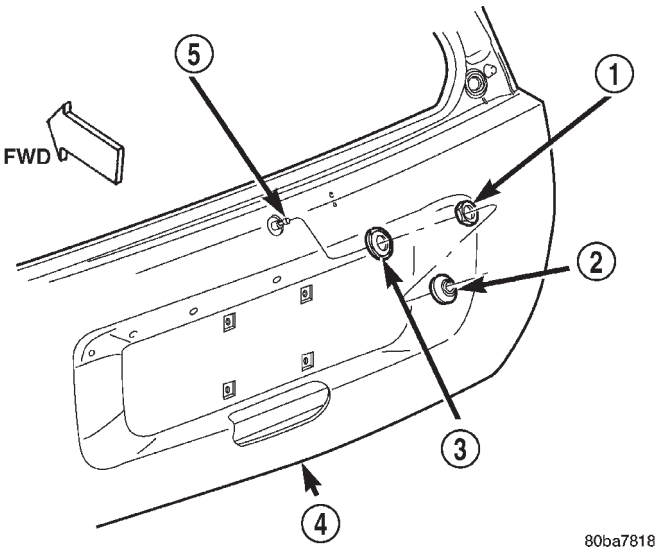

Fig. 13 Rear Wiper Motor Output Shaft Remove/Install

1 - NUT
2 - NUT COVER
3 - BEZEL AND GASKET
4 - LIFTGATE OUTER PANEL
5 - REAR WIPER MOTOR OUTPUT SHAFT

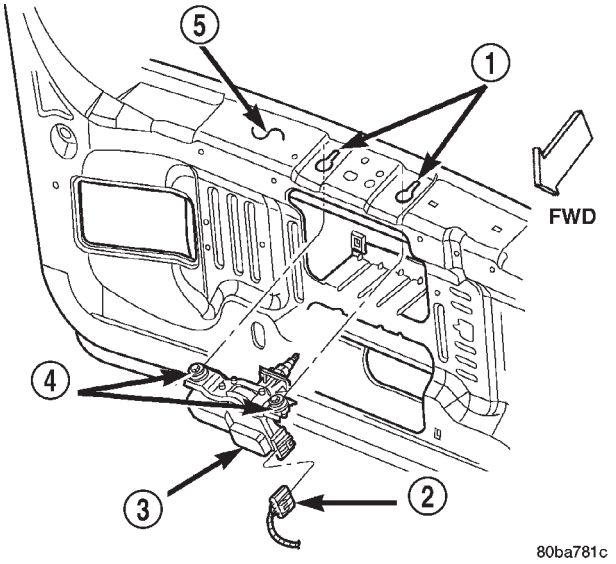

Fig. 14 Rear Wiper Module Remove/Install

1 - KEYED SLOTS
2 - LIFTGATE WIRE HARNESS CONNECTOR
3 - REAR WIPER MODULE
4 - NUT (2)
5 - LIFTGATE INNER PANEL

(9) Slide the rear wiper module and mounting bracket forward far enough to disengage the mounting nuts from the keyed holes in the liftgate inner panel.

REAR WIPER MODULE (Continued)

(10) Remove the rear wiper module and mounting bracket from the liftgate as a unit.

INSTALLATION

(1) Position the rear wiper module and bracket to the liftgate as a unit (Fig. 14).

(2) Insert the rear wiper motor output shaft through the hole in the liftgate outer panel and engage the mounting nuts in the keyed holes in the liftgate inner panel.

(3) From the outside of the liftgate, center the rear wiper motor output shaft in the liftgate outer panel mounting hole and install the gasket and bezel over the centered shaft (Fig. 13).

(4) Install and tighten the nut that secures the rear wiper motor output shaft to the outer liftgate panel. Tighten the nut to 4.8 N·m (43 in. lbs.).

(5) From the inside of the liftgate, install and tighten the two nuts that secure the rear wiper module mounting bracket to the liftgate inner panel. Tighten the nuts to 5.3 N·m (47 in. lbs.).

(6) Reconnect the liftgate wire harness connector for the rear wiper module to the module connector receptacle.

(7) Reinstall the trim panel onto the inside of the liftgate. (Refer to 23 - BODY/DECKLID/HATCH/LIFTGATE/TAILGATE/TRIM PANEL - INSTALLATION).

(8) From the outside of the liftgate, press the nut cover firmly and evenly over the rear wiper motor output shaft bezel using thumb pressure until it snaps into place.

(9) Reinstall the rear wiper arm onto the rear wiper motor output shaft. (Refer to 8 - ELECTRICAL/REAR WIPERS/WASHERS/REAR WIPER ARM - INSTALLATION).

(10) Reconnect the battery negative cable.

WIPER ARM PARK RAMP

REMOVAL

(1) Disengage the rear wiper arm support from the wiper arm park ramp on the right side of the liftgate just below the liftgate glass.

(2) Lift the wiper arm and blade away from the liftgate until the wiper arm hinge is in its over-center position.

(3) Remove the screw that secures the wiper arm park ramp to the liftgate outer panel (Fig. 15).

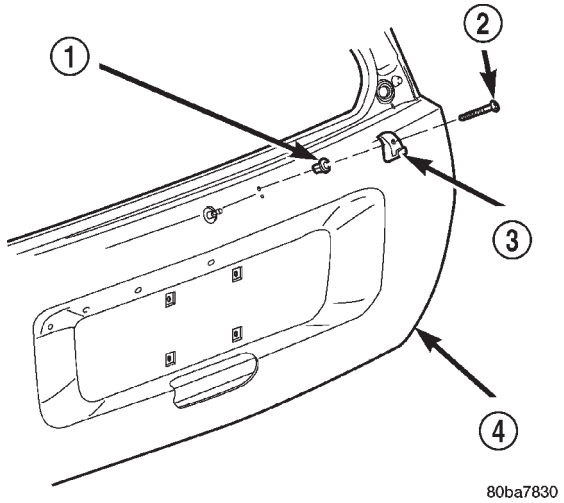

Fig. 15 Wiper Arm Park Ramp Remove/Install

1 - RIVET NUT
2 - SCREW
3 - PARK RAMP
4 - LIFTGATE

(4) Remove the wiper arm park ramp from the liftgate outer panel.

INSTALLATION

(1) Position the wiper arm park ramp onto the liftgate outer panel (Fig. 15).

(2) Install and tighten the screw that secures the wiper arm park ramp to the liftgate outer panel. Tighten the screw to 6.8 N·m (60 in. lbs.).

(3) Lower the rear wiper arm and blade and gently place the wiper arm support onto the wiper arm park ramp.

WIRING

TABLE OF CONTENTS

	page
WIRING DIAGRAM INFORMATION	8W-01-1
COMPONENT INDEX	8W-02-1
POWER DISTRIBUTION	8W-10-1
JUNCTION BLOCK	8W-12-1
GROUND DISTRIBUTION	8W-15-1
BUS COMMUNICATIONS	8W-18-1
CHARGING SYSTEM	8W-20-1
STARTING SYSTEM	8W-21-1
FUEL/IGNITION SYSTEM	8W-30-1
TRANSMISSION CONTROL SYSTEM	8W-31-1
VEHICLE SPEED CONTROL	8W-33-1
ANTILOCK BRAKES	8W-35-1
VEHICLE THEFT SECURITY SYSTEM	8W-39-1
INSTRUMENT CLUSTER	8W-40-1
HORN/CIGAR LIGHTER/POWER OUTLET	8W-41-1
AIR CONDITIONING-HEATER	8W-42-1
AIRBAG SYSTEM	8W-43-1
INTERIOR LIGHTING	8W-44-1
BODY CONTROL MODULE	8W-45-1
AUDIO SYSTEM	8W-47-1
REAR WINDOW DEFOGGER	8W-48-1
OVERHEAD CONSOLE	8W-49-1
FRONT LIGHTING	8W-50-1
REAR LIGHTING	8W-51-1
TURN SIGNALS	8W-52-1
WIPERS	8W-53-1
TRAILER TOW	8W-54-1
POWER WINDOWS	8W-60-1
POWER DOOR LOCKS	8W-61-1
POWER MIRRORS	8W-62-1
POWER SEAT	8W-63-1
POWER SUNROOF	8W-64-1
SPLICE INFORMATION	8W-70-1
CONNECTOR PIN-OUTS	8W-80-1
CONNECTOR/GROUND LOCATIONS	8W-90-1
SPLICE LOCATIONS	8W-95-1
POWER DISTRIBUTION	8W-97-1

8W-01 WIRING DIAGRAM INFORMATION

TABLE OF CONTENTS

page

WIRING DIAGRAM INFORMATION
DESCRIPTION 1
WARNING 4
DIAGNOSIS AND TESTING 4
WIRING HARNESS 4
STANDARD PROCEDURE 6
TESTING OF VOLTAGE POTENTIAL 6
TESTING FOR CONTINUITY 6
TESTING FOR SHORT TO GROUND 6
TESTING FOR A SHORT TO GROUND ON FUSES POWERING SEVERAL LOADS 7
TESTING FOR VOLTAGE DROP 7
SPECIAL TOOLS 8
CONNECTOR - AUGAT
REMOVAL 8
INSTALLATION. 8

page

CONNECTOR - MOLEX
REMOVAL 9
INSTALLATION. 9
CONNECTOR - THOMAS AND BETTS
REMOVAL 9
INSTALLATION. 10
DIODE
REMOVAL 10
INSTALLATION. 10
TERMINAL
REMOVAL 11
INSTALLATION 11
WIRE
STANDARD PROCEDURE 12
STANDARD PROCEDURE - WIRE SPLICING . . 12

WIRING DIAGRAM INFORMATION

DESCRIPTION - HOW TO USE WIRING DIAGRAMS

DaimlerChrysler Corporation wiring diagrams are designed to provide information regarding the vehicles wiring content. In order to effectively use the wiring diagrams to diagnose and repair DaimlerChrysler Corporation vehicles, it is important to understand all of their features and characteristics.

Diagrams are arranged such that the power (B+) side of the circuit is placed near the top of the page, and the ground (B-) side of the circuit is placed near the bottom of the page (Fig. 1).

All switches, components, and modules are shown in the at rest position with the doors closed and the key removed from the ignition (Fig. 2).

Components are shown two ways. A solid line around a component indicates that the component is complete. A dashed line around the component indicates that the component is being shown is not complete. Incomplete components have a reference number to indicate the page where the component is shown complete.

It is important to realize that no attempt is made on the diagrams to represent components and wiring as they appear on the vehicle. For example, a short piece of wire is treated the same as a long one. In addition, switches and other components are shown as simply as possible, with regard to function only.

WIRING DIAGRAM INFORMATION (Continued)

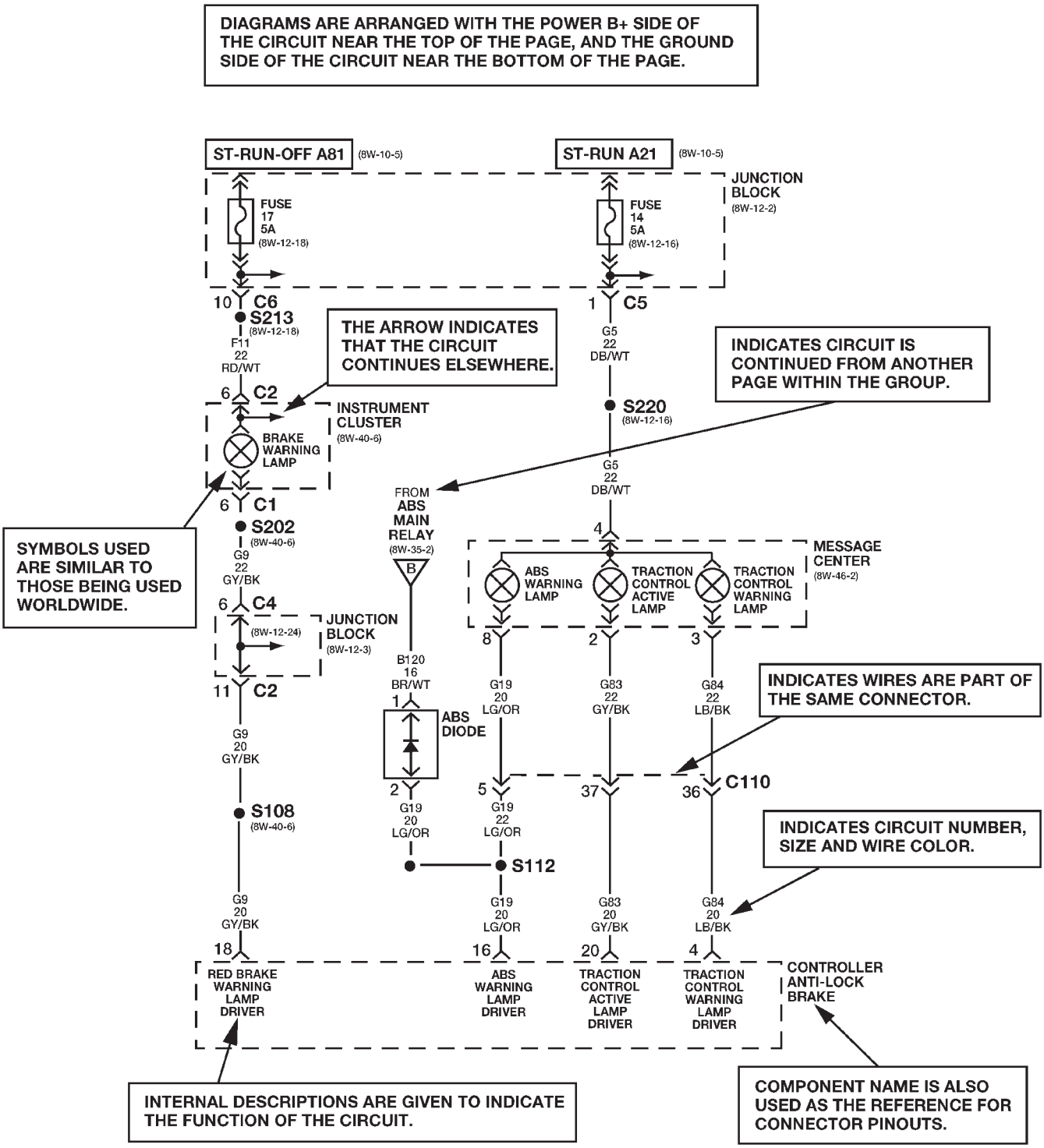

The System shown here is an EXAMPLE ONLY. It does not represent the actual circuit shown in the WIRING DIAGRAM SECTION.

80c06d01

Fig. 1 WIRING DIAGRAM EXAMPLE 1

WIRING DIAGRAM INFORMATION (Continued)

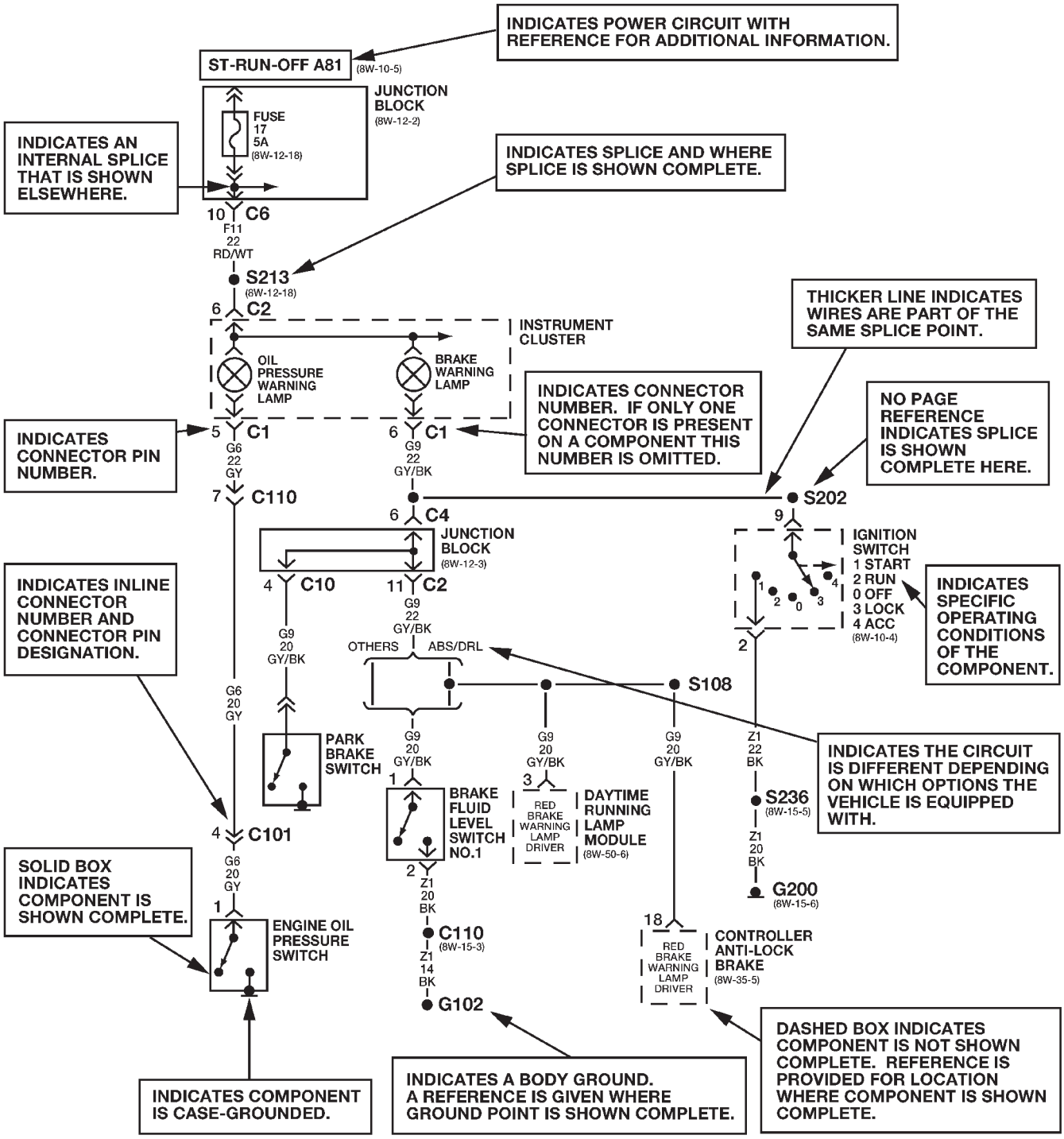

The System shown here is an EXAMPLE ONLY. It does not represent the actual circuit shown in the WIRING DIAGRAM SECTION.

80c06d02

Fig. 2 WIRING DIAGRAM EXAMPLE 2

WIRING DIAGRAM INFORMATION (Continued)

SYMBOLS

International symbols are used throughout the wiring diagrams. These symbols are consistent with those being used around the world (Fig. 3).

TERMINOLOGY

This is a list of terms and definitions used in the wiring diagrams.

LHD . . . . . Left Hand Drive Vehicles
RHD . . . . . Right Hand Drive Vehicles
ATX . . Automatic Transmissions-Front Wheel Drive
MTX . . . . Manual Transmissions-Front Wheel Drive
AT . . . . Automatic Transmissions-Rear Wheel Drive
MT . . . . . Manual Transmissions-Rear Wheel Drive
SOHC . . . . . Single Over Head Cam Engine
DOHC . . . . . Double Over Head Cam Engine
Built-Up-Export . . . . . Vehicles Built For Sale In Markets Other Than North America
Except-Built-Up-Export . . Vehicles Built For Sale In North America

WARNINGS - GENERAL

WARNINGS provide information to prevent personal injury and vehicle damage. Below is a list of general warnings that should be followed any time a vehicle is being serviced.

WARNING:: ALWAYS WEAR SAFETY GLASSES FOR EYE PROTECTION.

WARNING: USE SAFETY STANDS ANYTIME A PROCEDURE REQUIRES BEING UNDER A VEHICLE.

WARNING: BE SURE THAT THE IGNITION SWITCH ALWAYS IS IN THE OFF POSITION, UNLESS THE PROCEDURE REQUIRES IT TO BE ON.

WARNING: SET THE PARKING BRAKE WHEN WORKING ON ANY VEHICLE. AN AUTOMATIC TRANSMISSION SHOULD BE IN PARK. A MANUAL TRANSMISSION SHOULD BE IN NEUTRAL.

WARNING: OPERATE THE ENGINE ONLY IN A WELL-VENTILATED AREA.

WARNING: KEEP AWAY FROM MOVING PARTS WHEN THE ENGINE IS RUNNING, ESPECIALLY THE FAN AND BELTS.

WARNING: TO PREVENT SERIOUS BURNS, AVOID CONTACT WITH HOT PARTS SUCH AS THE RADIATOR, EXHAUST MANIFOLD(S), TAIL PIPE, CATALYTIC CONVERTER AND MUFFLER.

WARNING: DO NOT ALLOW FLAME OR SPARKS NEAR THE BATTERY. GASES ARE ALWAYS PRESENT IN AND AROUND THE BATTERY.

WARNING: ALWAYS REMOVE RINGS, WATCHES, LOOSE HANGING JEWELRY AND LOOSE CLOTHING.

DIAGNOSIS AND TESTING - WIRING HARNESS

TROUBLESHOOTING TOOLS

When diagnosing a problem in an electrical circuit there are several common tools necessary. These tools are listed and explained below.

- Jumper Wire - This is a test wire used to connect two points of a circuit. It can be used to bypass an open in a circuit.

WARNING: NEVER USE A JUMPER WIRE ACROSS A LOAD, SUCH AS A MOTOR, CONNECTED BETWEEN A BATTERY FEED AND GROUND.

- Voltmeter - Used to check for voltage on a circuit. Always connect the black lead to a known good ground and the red lead to the positive side of the circuit.

CAUTION: Most of the electrical components used in today's vehicles are Solid State. When checking voltages in these circuits, use a meter with a 10 - megohm or greater impedance rating.

- Ohmmeter - Used to check the resistance between two points of a circuit. Low or no resistance in a circuit means good continuity.

CAUTION: Most of the electrical components used in today's vehicles are Solid State. When checking resistance in these circuits use a meter with a 10 - megohm or greater impedance rating. In addition, make sure the power is disconnected from the circuit. Circuits that are powered up by the vehicle's electrical system can cause damage to the equipment and provide false readings.

WIRING DIAGRAM INFORMATION (Continued)

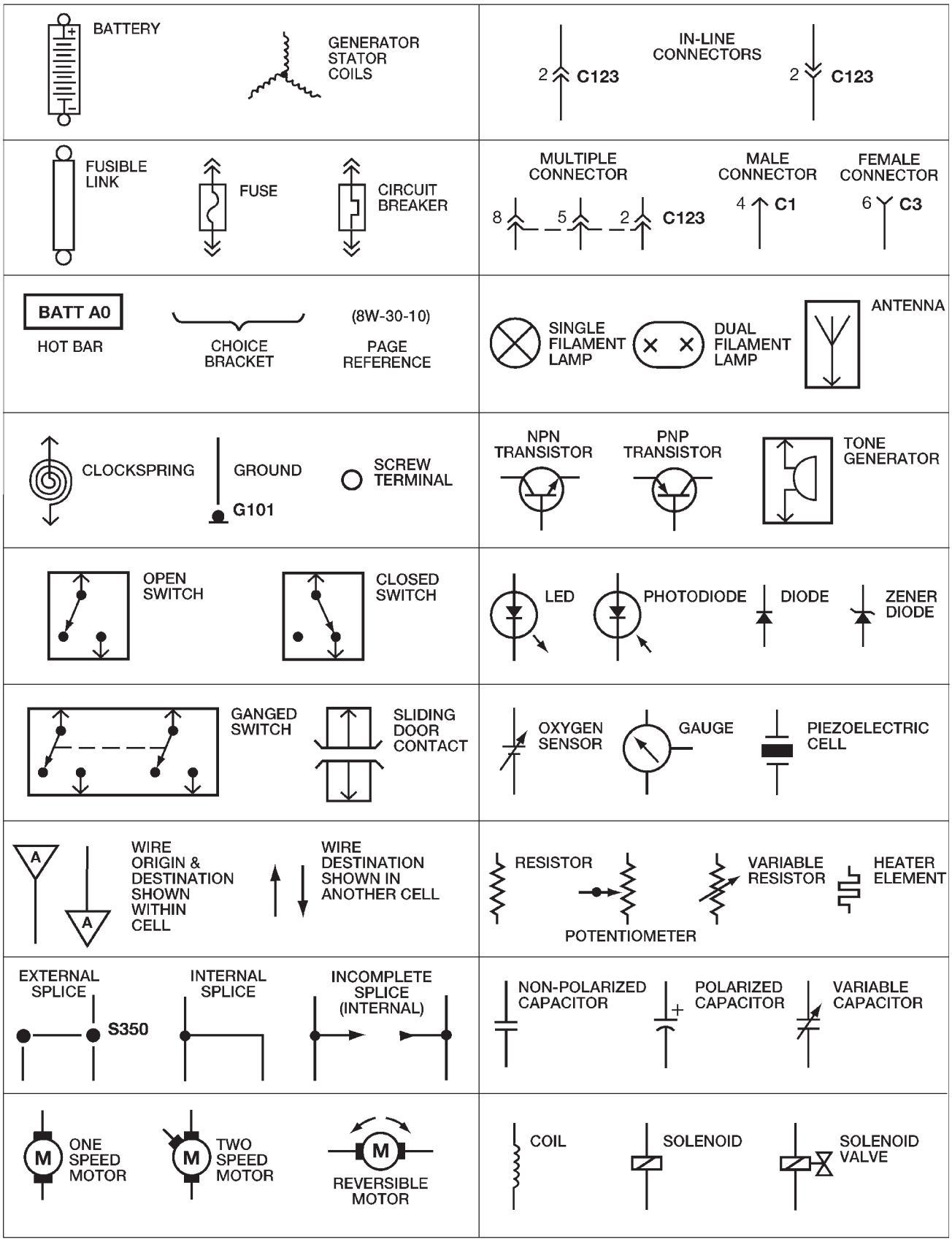

Fig. 3 WIRING DIAGRAM SYMBOLS

WIRING DIAGRAM INFORMATION (Continued)

• Probing Tools - These tools are used for probing terminals in connectors (Fig. 4)Select the proper size tool from Special Tool Package 6807, and insert it into the terminal being tested. Use the other end of the tool to insert the meter probe.

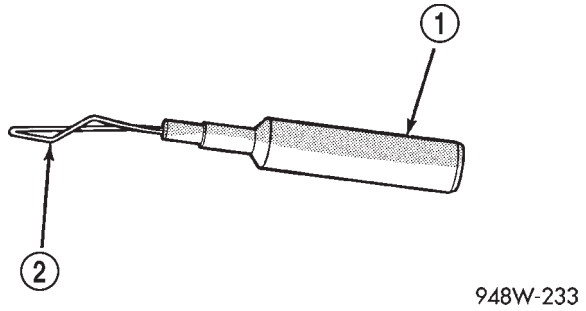

Fig. 4 PROBING TOOL

1 - SPECIAL TOOL 6801
2 - PROBING END

INTERMITTENT AND POOR CONNECTIONS

Most intermittent electrical problems are caused by faulty electrical connections or wiring. It is also possible for a sticking component or relay to cause a problem. Before condemning a component or wiring assembly, check the following items.

• Connectors are fully seated
• Spread terminals, or terminal push out
• Terminals in the wiring assembly are fully seated into the connector/component and locked into position
• Dirt or corrosion on the terminals. Any amount of corrosion or dirt could cause an intermittent problem
• Damaged connector/component casing exposing the item to dirt or moisture
• Wire insulation that has rubbed through causing a short to ground
• Some or all of the wiring strands broken inside of the insulation
• Wiring broken inside of the insulation

TROUBLESHOOTING WIRING PROBLEMS

When troubleshooting wiring problems there are six steps which can aid in the procedure. The steps are listed and explained below. Always check for non-factory items added to the vehicle before doing any diagnosis. If the vehicle is equipped with these items, disconnect them to verify these add-on items are not the cause of the problem.

(1) Verify the problem.

(2) Verify any related symptoms. Do this by performing operational checks on components that are in the same circuit. Refer to the wiring diagrams.

(3) Analyze the symptoms. Use the wiring diagrams to determine what the circuit is doing, where the problem most likely is occurring and where the diagnosis will continue.

(4) Isolate the problem area.

(5) Repair the problem area.

(6) Verify the proper operation. For this step, check for proper operation of all items on the repaired circuit. Refer to the wiring diagrams.

STANDARD PROCEDURE - TESTING FOR VOLTAGE POTENTIAL

(1) Connect the ground lead of a voltmeter to a known good ground (Fig. 5).

(2) Connect the other lead of the voltmeter to the selected test point. The vehicle ignition may need to be turned ON to check voltage. Refer to the appropriate test procedure.

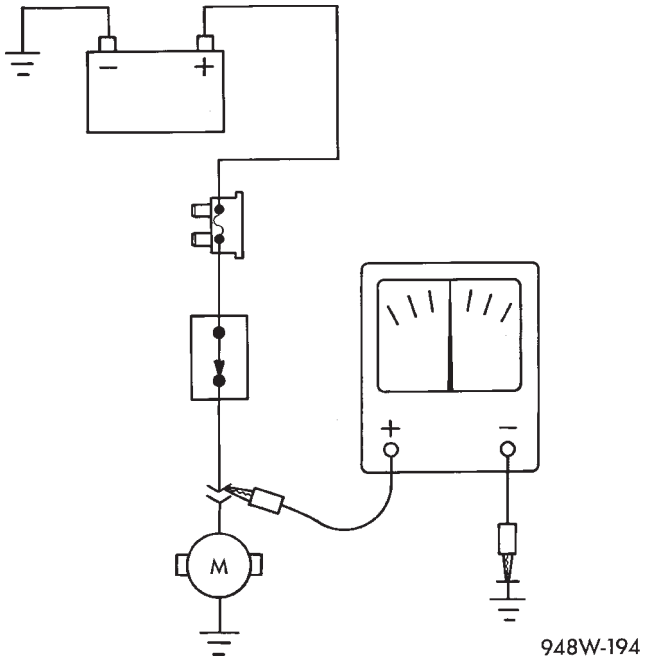

Fig. 5 TESTING FOR VOLTAGE POTENTIAL

STANDARD PROCEDURE - TESTING FOR CONTINUITY

(1) Remove the fuse for the circuit being checked or, disconnect the battery.

(2) Connect one lead of the ohmmeter to one side of the circuit being tested (Fig. 6)

(3) Connect the other lead to the other end of the circuit being tested. Low or no resistance means good continuity.

STANDARD PROCEDURE - TESTING FOR A SHORT TO GROUND

(1) Remove the fuse and disconnect all items involved with the fuse.

(2) Connect a test light or a voltmeter across the terminals of the fuse.

WIRING DIAGRAM INFORMATION (Continued)

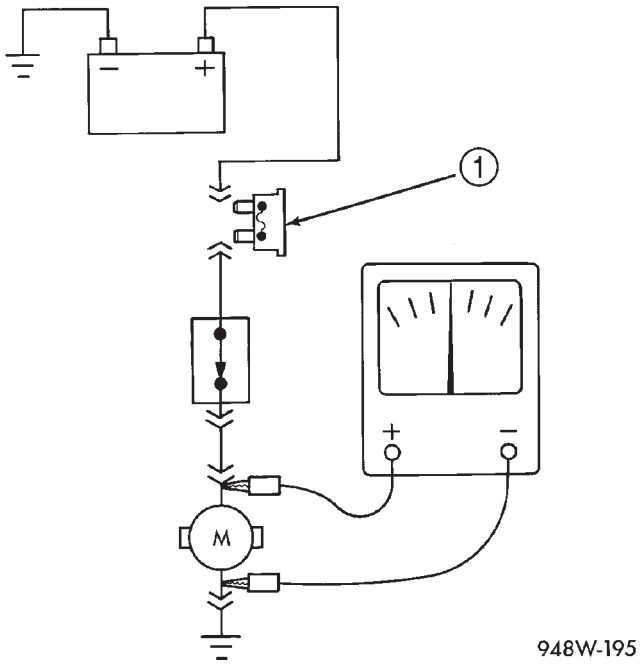

Fig. 6 TESTING FOR CONTINUITY

1 - FUSE REMOVED FROM CIRCUIT

(3) Starting at the fuse block, wiggle the wiring harness about six to eight inches apart and watch the voltmeter/test lamp.

(4) If the voltmeter registers voltage or the test lamp glows, there is a short to ground in that general area of the wiring harness.

STANDARD PROCEDURE - TESTING FOR SHORT TO GROUND ON FUSES POWERING SEVERAL LOADS

(1) Refer to the wiring diagrams and disconnect or isolate all items on the suspected fused circuits.

(2) Replace the blown fuse.

(3) Supply power to the fuse by turning ON the ignition switch or re-connecting the battery.

(4) Start connecting the items in the fuse circuit one at a time. When the fuse blows the circuit with the short to ground has been isolated.

STANDARD PROCEDURE - TESTING FOR A VOLTAGE DROP

(1) Connect the positive lead of the voltmeter to the side of the circuit closest to the battery (Fig. 7).

(2) Connect the other lead of the voltmeter to the other side of the switch or component.

(3) Operate the item.

(4) The voltmeter will show the difference in voltage between the two points.

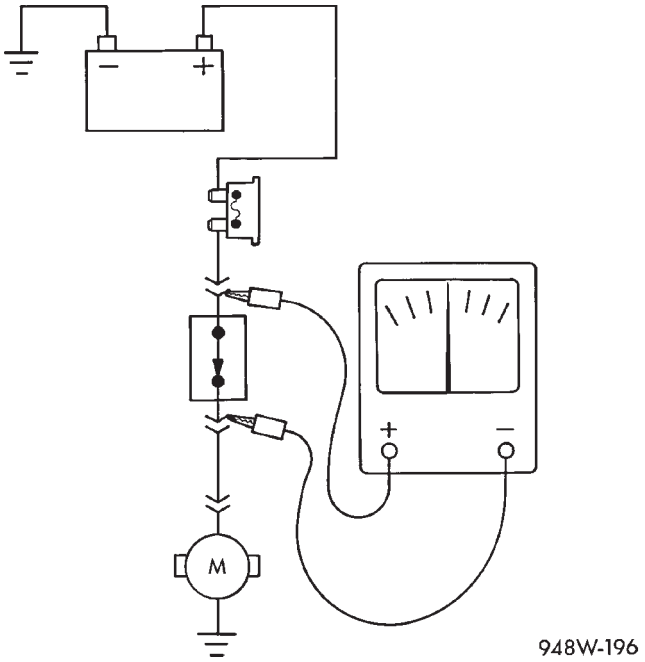

Fig. 7 TESTING FOR VOLTAGE DROP

SPECIAL TOOLS

SPECIAL TOOLS - WIRING/TERMINAL

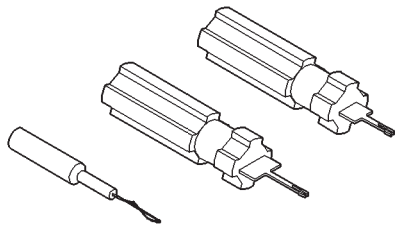

PROBING TOOL PACKAGE 6807

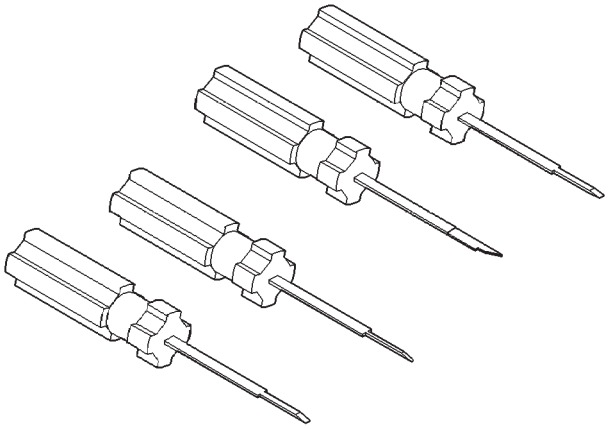

TERMINAL PICK 6680

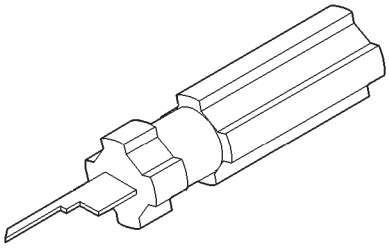

TERMINAL REMOVING TOOL 6932

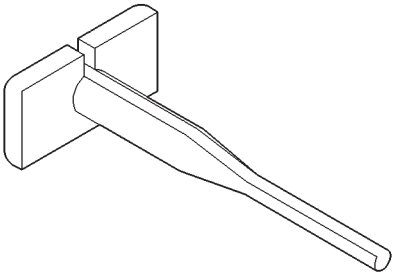

TERMINAL REMOVING TOOL 6934

CONNECTOR - AUGAT

REMOVAL

(1) Disconnect battery.

(2) Disconnect the connector from its mating half/component.

(3) Push down on the yellow connector locking tab to release the terminals (Fig. 8).

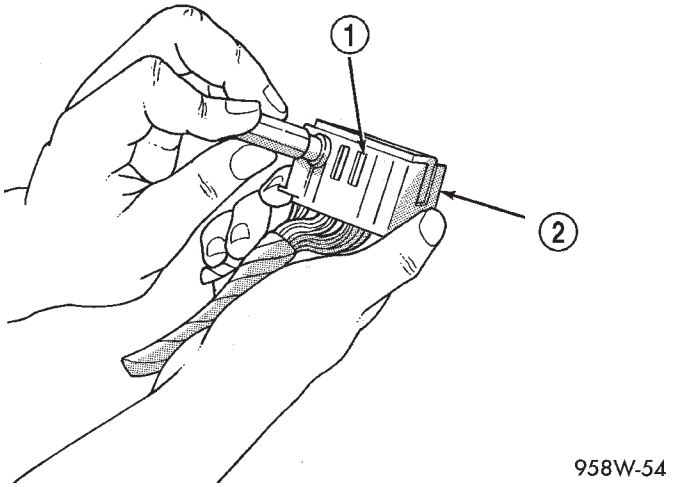

Fig. 8 AUGAT CONNECTOR REPAIR

1 - LOCKING TAB
2 - CONNECTOR

(4) Using special tool 6932, push the terminal to remove it from the connector (Fig. 9).

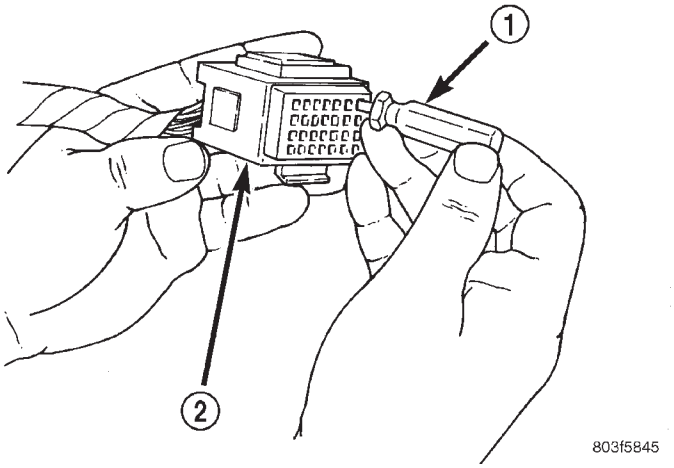

Fig. 9 USING

1 - SPECIAL TOOL 6932
2 - CONNECTOR

(5) Repair or replace the terminal as necessary.

INSTALLATION

(1) Reset the terminal locking tang.

CONNECTOR - AUGAT (Continued)

(2) Insert the removed wire in the same cavity on the repair connector.

(3) Repeat steps for each wire in the connector, being sure that all wires are inserted into the proper cavities. For additional connector pin-out identification, refer to the wiring diagrams.

(4) When the connector is re-assembled, the locking tab must be placed in the locked position to prevent terminal push out.

(5) Connect connector to its mating half/component.

(6) Connect battery and test all affected systems.

CONNECTOR - MOLEX

REMOVAL

(1) Disconnect battery.

(2) Disconnect the connector from its mating half/component.

(3) Insert special tool 6742 into the terminal end of the connector (Fig. 10).

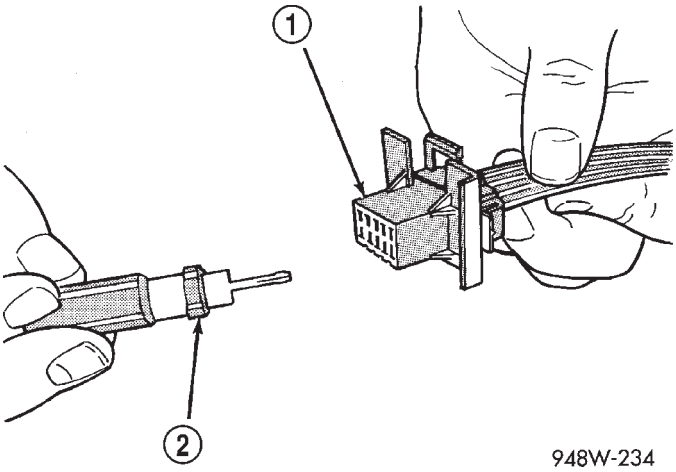

Fig. 10 MOLEX CONNECTOR REPAIR

1 - CONNECTOR
2 - SPECIAL TOOL 6742

(4) Using special tool 6742, release the locking fingers on the terminal (Fig. 11).

(5) Pull on the wire to remove it from the connector.

(6) Repair or replace the terminal as necessary.

INSTALLATION

(1) Reset the terminal locking tang.

(2) Insert the removed wire in the same cavity on the repair connector.

(3) Repeat steps for each wire in the connector, being sure that all wires are inserted into the proper cavities. For additional connector pin-out identification, refer to the wiring diagrams.

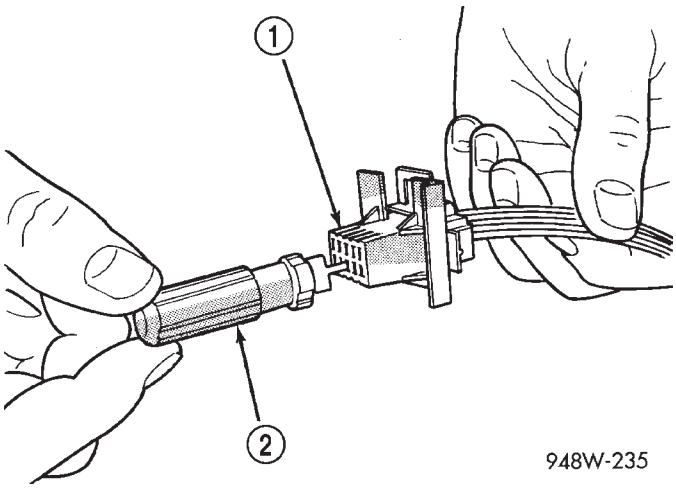

Fig. 11 USING SPECIAL TOOL 6742

1 - CONNECTOR
2 - SPECIAL TOOL 6742

(4) Connect connector to its mating half/component.

(5) Connect battery and test all affected systems.

CONNECTOR - THOMAS AND BETTS

REMOVAL

(1) Disconnect battery.

(2) Disconnect the connector from its mating half/component.

(3) Push in the two lock tabs on the side of the connector (Fig. 12).

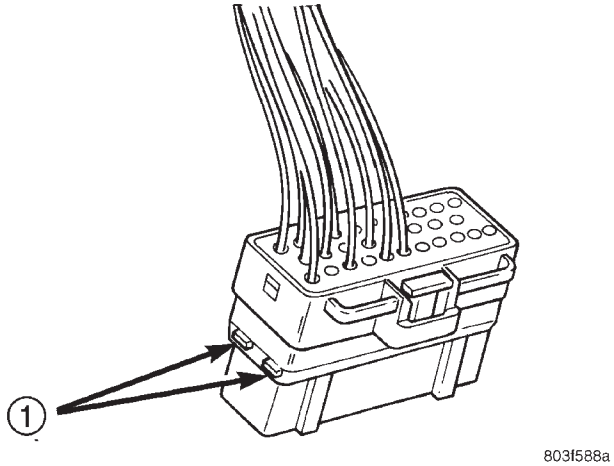

Fig. 12 THOMAS AND BETTS CONNECTOR LOCK RELEASE TABS

1 - LOCK TABS

CONNECTOR - THOMAS AND BETTS (Continued)

(4) Insert the probe end of special tool 6934 into the back of the connector cavity (Fig. 13).

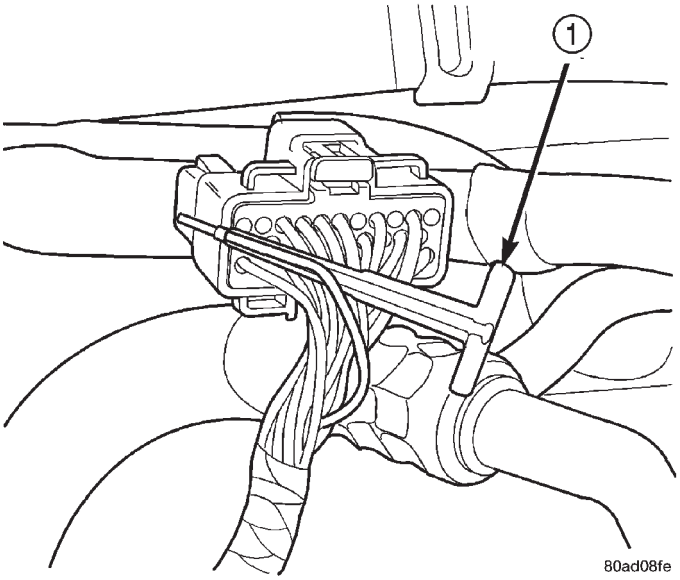

Fig. 13 REMOVING WIRE TERMINAL

1 - SPECIAL TOOL 6934

(5) Grasp the wire and tool 6934, then slowly remove the wire and terminal from the connector.

(6) Repair or replace the terminal as necessary.

INSTALLATION

(1) Reset the terminal locking tang.

(2) Insert the removed wire in the same cavity on the repair connector.

(3) Repeat steps for each wire in the connector, being sure that all wires are fully seated into the proper cavities. For additional connector pin-out identification, refer to the wiring diagrams.

(4) Push in the single lock tab on the side of the connector (Fig. 14).

(5) Connect connector to its mating half/component.

(6) Connect battery and test all affected systems.

DIODE

REMOVAL

(1) Disconnect the battery.

(2) Locate the diode in the harness, and remove the protective covering.

(3) Remove the diode from the harness, pay attention to the current flow direction (Fig. 15).

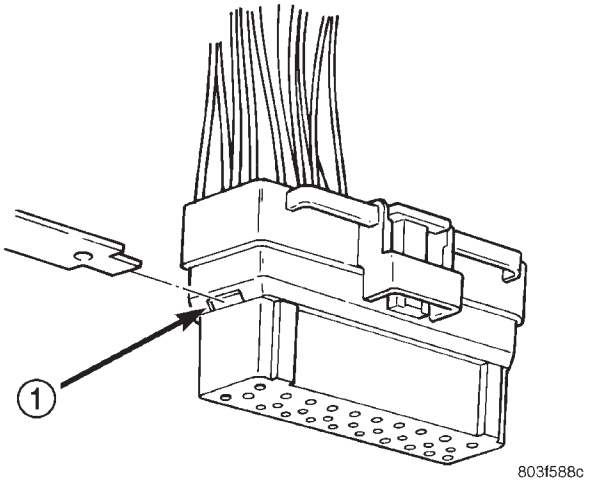

Fig. 14 SINGLE LOCK TAB

1 - SINGLE LOCK TAB

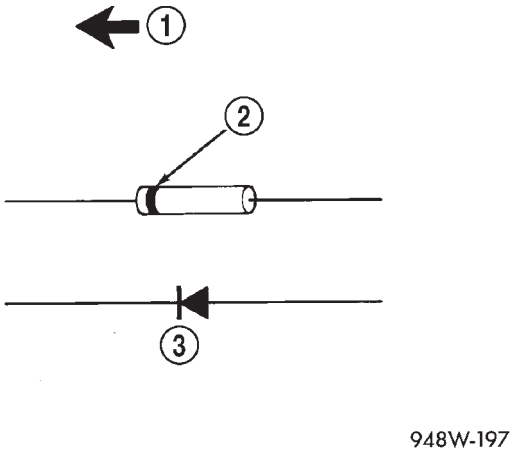

Fig. 15 DIODE IDENTIFICATION

1 - CURRENT FLOW
2 - BAND AROUND DIODE INDICATES CURRENT FLOW
3 - DIODE AS SHOWN IN THE DIAGRAMS

INSTALLATION

(1) Remove the insulation from the wires in the harness. Only remove enough insulation to solder in the new diode.

(2) Install the new diode in the harness, making sure current flow is correct. If necessary, refer to the appropriate wiring diagram for current flow (Fig. 15).

(3) Solder the connection together using rosin core type solder only. **Do not use acid core solder.**

(4) Tape the diode to the harness using electrical tape. Make sure the diode is completely sealed from the elements.

(5) Re-connect the battery and test affected systems.

TERMINAL

REMOVAL

(1) Disconnect battery.

(2) Disconnect the connector being repaired from its mating half/component.

(3) Remove the connector locking wedge, if required (Fig. 16).

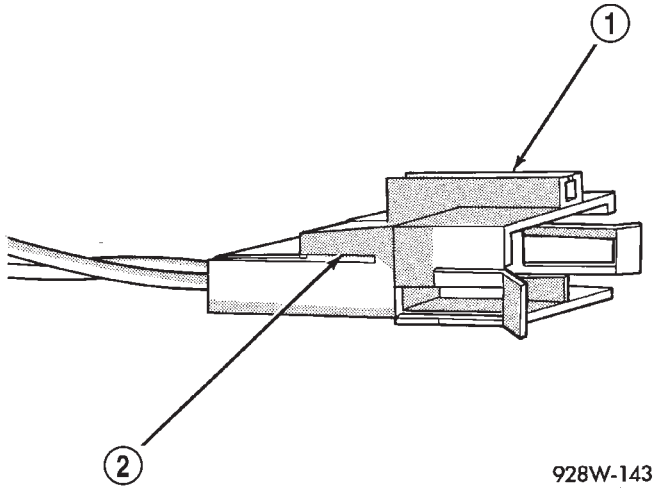

Fig. 16 CONNECTOR LOCKING WEDGE TAB (TYPICAL)

1 - CONNECTOR
2 - CONNECTOR LOCKING WEDGE TAB

(4) Position the connector locking finger away from the terminal using the proper pick from special tool kit 6680. Pull on the wire to remove the terminal from the connector (Fig. 17) (Fig. 18).

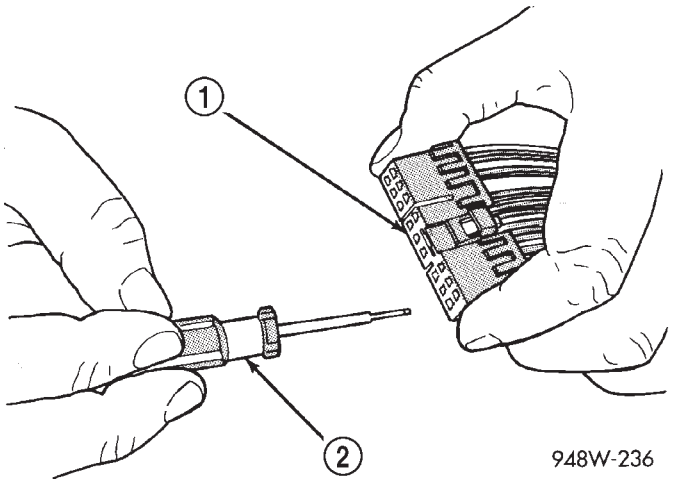

Fig. 17 TERMINAL REMOVAL

1 - CONNECTOR
2 - FROM SPECIAL TOOL KIT 6680

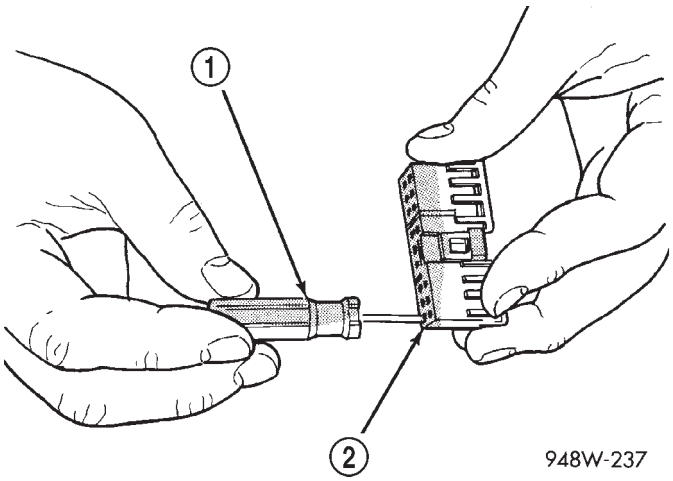

Fig. 18 TERMINAL REMOVAL USING SPECIAL TOOL

1 - FROM SPECIAL TOOL KIT 6680
2 - CONNECTOR

(5) Cut the wire 6 inches from the back of the connector.

INSTALLATION

(1) Select a wire from the terminal repair assembly that best matches the color wire being repaired.

(2) Cut the repair wire to the proper length and remove one–half (1/2) inch of insulation.

(3) Splice the repair wire to the wire harness .

(4) Insert the repaired wire into the connector.

(5) Install the connector locking wedge, if required, and reconnect the connector to its mating half/component.

(6) Re-tape the wire harness starting at 1–1/2 inches behind the connector and 2 inches past the repair.

(7) Connect battery and test all affected systems.

WIRE

STANDARD PROCEDURE - WIRE SPLICING

When splicing a wire, it is important that the correct gage be used as shown in the wiring diagrams.

(1) Remove one-half (1/2) inch of insulation from each wire that needs to be spliced.

(2) Place a piece of adhesive lined heat shrink tubing on one side of the wire. Make sure the tubing will be long enough to cover and seal the entire repair area.

(3) Place the strands of wire overlapping each other inside of the splice clip (Fig. 19).

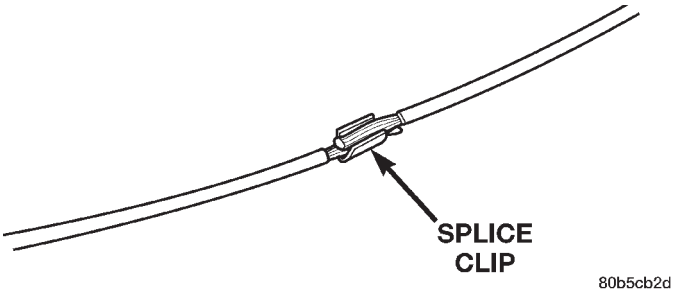

Fig. 19 SPLICE CLIP

(4) Using crimping tool, Miller p/n 8272, crimp the splice clip and wires together (Fig. 20)

(5) Solder the connection together using rosin core type solder only (Fig. 21).

CAUTION: DO NOT USE ACID CORE SOLDER.

(6) Center the heat shrink tubing over the joint and heat using a heat gun. Heat the joint until the tubing is tightly sealed and sealant comes out of both ends of the tubing (Fig. 22).

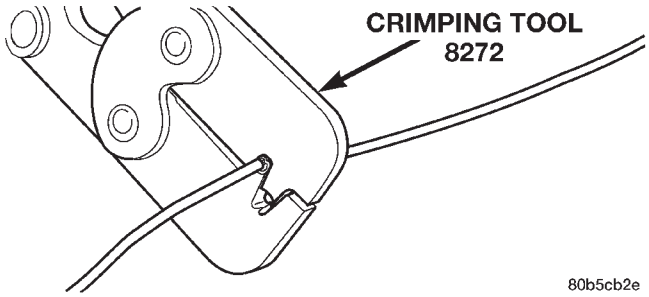

Fig. 20 CRIMPING TOOL

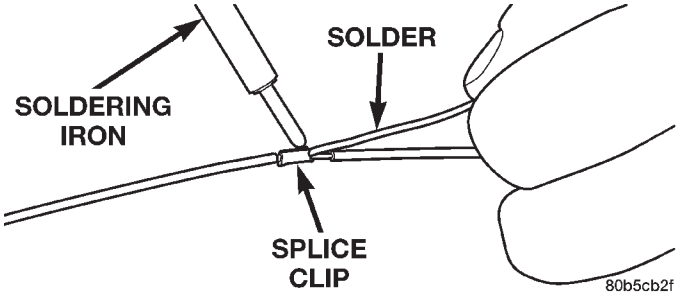

Fig. 21 SOLDER

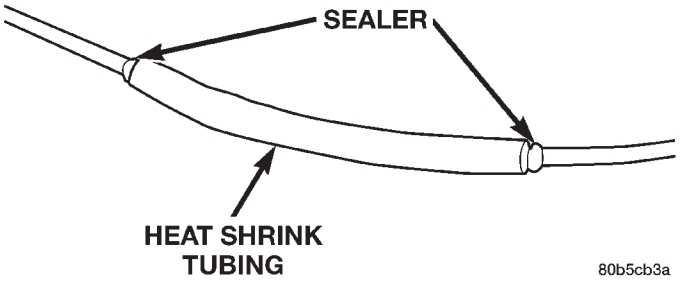

Fig. 22 HEAT SHRINK TUBING

8W-02 COMPONENT INDEX

Component	Page
A/C Compressor Clutch Relay	8W-42
A/C Compressor Clutch	8W-42
A/C High Pressure Switch	8W-42
A/C Low Pressure Switch	8W-42
A/C Pressure Transducer	8W-42
Airbag Control Module	8W-43
Airbag Warning Indicator	8W-43
Airbags	8W-43
Ambient Temperature Sensor	8W-45
Antenna	8W-47
Ash Receiver Lamp	8W-44
Automatic Day/Night Mirror	8W-49
Automatic Headlamp Light Sensor/VTSS LED	8W-39
Automatic Shut Down Relay	8W-30
Automatic Zone Control Module	8W-42
Battery Temperature Sensor	8W-30
Battery	8W-20
Blend Door Motor/Actuators	8W-42
Blower Motor Controller	8W-42
Blower Motor Resistor Block	8W-42
Blower Motor	8W-42
Body Control Module	8W-45
Brake Lamp Switch	8W-33
Brake Transmission Shift Interlock Solenoid	8W-30
Camshaft Position Sensor	8W-30
Capacitors	8W-30
Cargo Lamp	8W-44
Center High Mounted Stop Lamp	8W-51
Cigar Lighter Relay	8W-41
Cigar Lighter	8W-41
Circuit Breakers (JB)	8W-12
Clockspring	8W-33, 41, 43, 47
Coil On Plugs	8W-30
Coil Rail	8W-30
Combination Flasher	8W-52
Compact Disc Changer	8W-47
Controller Antilock Brake	8W-35
Coolant Level Sensor	8W-45
Courtesy Lamps	8W-44
Crankshaft Position Sensor	8W-30
Cylinder Lock Switches	8W-61
Data Link Connector	8W-18
Diagnostic Junction Port	8W-18
Door Handle Courtesy Lamps	8W-44
Door Modules	8W-60, 61, 62, 63
Door Power Lock Motor/Ajar Switches	8W-61
Electric Brake	8W-54
Electronic Speed Control Servo	8W-33
Engine Coolant Temperature Sensor	8W-30
Engine Oil Pressure Sensor	8W-30
Engine Starter Motor Relay	8W-21
Engine Starter Motor	8W-21
Evap/Purge Solenoid	8W-30
Fog Lamp Relay	8W-50
Fog Lamps	8W-50
Front Door Courtesy Lamps	8W-44
Front Power Outlet	8W-41
Front Power Window Motors	8W-60
Front Washer Pump	8W-53
Front Wiper Motor	8W-53
Fuel Injectors	8W-30
Fuel Pump Module	8W-30
Fuel Pump Relay	8W-30
Fuses (JB)	8W-12
Fuses (PDC)	8W-10
Fusible Link	8W-10, 20
Generator	8W-20
Glove Box Lamp	8W-44
Grounds	8W-15
G-Switch	8W-35
Headlamps	8W-50
Heated Seats	8W-63
High Beam Relay	8W-50
Horn Relay	8W-41
Horn Switch	8W-41
Horns	8W-41
Hydraulic Cooling Module	8W-42
Idle Air Control Motor	8W-30
Ignition Switch	8W-10
Input Speed Sensor	8W-31
Instrument Cluster	8W-40
Intake Air Temperature Sensor	8W-30
Junction Block	8W-12
Knock Sensor	8W-30
Lamp Assemblies	8W-51, 52
Leak Detection Pump	8W-30
License Lamp No. 2	8W-51
License Lamps	8W-51
Liftgate Ajar Switches	8W-61
Liftgate Flip-Up Push Button Switch	8W-61
Liftgate Flip-Up Release Solenoid	8W-61
Liftgate Power Lock Motor	8W-61
Line Pressure Sensor	8W-31
Low Beam Relay	8W-50
Low Beam/Daytime Running Lamp Relay	8W-50
Lumbar Motors	8W-63
Lumbar Switches	8W-63
Manifold Absolute Pressure Sensor	8W-30
Manual Temperature Control	8W-42
Memory Set Switch	8W-62, 63
Mode Door Motor/Actuator	8W-42
Multi- Function Switches	8W-50, 53

Component	Page
Output Speed Sensor	8W-31
Overdrive Switch	8W-31
Overhead Map/Courtesy Lamp	8W-44
Oxygen Sensor Downstream Relay	8W-30
Oxygen Sensors	8W-30
Park Brake Switch	8W-40
Park Lamp Relay	8W-50
Park Lamps	8W-50
Park/Neutral Position Switch	8W-31
Park/Turn Signal Lamps	8W-50
Power Amplifier	8W-47
Power Connector	8W-41
Power Distribution Center	8W-10
Power Mirrors	8W-62
Power Seat Motor Sensors	8W-63
Power Seat Motors	8W-63
Power Seat Switches	8W-63
Power Window Motors	8W-60
Power Window Switches	8W-60
Powertrain Control Module	8W-30
Radiator Fan Motor	8W-42
Radiator Fan Relay	8W-42
Radio	8W-47
Rear Power Outlet	8W-41
Rear Washer Pump	8W-53
Rear Window Defogger Relay	8W-48
Rear Window Defogger	8W-48
Rear Wiper Motor	8W-53
Recirculation Door Motor/Actuator	8W-42
Red Brake Warning Indicator Switch	8W-35
Remote Radio Switches	8W-47
Seat Belt Switch	8W-40
Seat Module	8W-63, 63-7
Sentry Key Immobilizer Module	8W-39
Side Marker Lamps	8W-50
Speakers	8W-47
Speed Control Switches	8W-33
Splice Information	8W-70
Sunroof Control Module	8W-64
Sunroof Delay Relay	8W-64
Sunroof Motor	8W-64
Sunroof Switch	8W-64
Temperature Valve Actuator	8W-42
Throttle Position Sensor	8W-30
Trailer Tow Brake Lamp Relay	8W-54
Trailer Tow Circuit Breaker	8W-54
Trailer Tow Connector	8W-54
Trailer Tow Electric Brake Provision	8W-54
Trailer Tow Left Turn Relay	8W-54
Trailer Tow Right Turn Relay	8W-54
Transfer Case Switch	8W-31
Transmission Control Module	8W-31
Transmission Control Relay	8W-31
Transmission Range Indicator Illumination	8W-44
Transmission Solenoid	8W-31
Transmission Solenoid/TRS Assembly	8W-31
Underhood Lamp	8W-44
Vehicle Information Center	8W-49
Visor/Vanity Lamps	8W-44
Washer Fluid Level Switch	8W-53
Wheel Speed Sensors	8W-35
Wiper High/Low Relay	8W-53
Wiper On/Off Relay	8W-53

8W-10 POWER DISTRIBUTION

Component	Page
A/C Compressor Clutch	8W-10-22
A/C Compressor Clutch Relay	8W-10-22
Automatic Shut Down Relay	8W-10-12
Battery	8W-10-7
Blower Motor	8W-10-9
Blower Motor Controller	8W-10-9
Body Control Module	8W-10-17, 19
Capacitor	8W-10-12
Capacitor No. 1	8W-10-14
Capacitor No. 2	8W-10-14
Cigar Lighter Relay	8W-10-9
Circuit Breaker No. 1 (JB)	8W-10-19
Circuit Breaker No. 2 (JB)	8W-10-16
Coil On Plug No. 1	8W-10-14
Coil On Plug No. 2	8W-10-14
Coil On Plug No. 3	8W-10-14
Coil On Plug No. 4	8W-10-14
Coil On Plug No. 5	8W-10-14
Coil On Plug No. 6	8W-10-14
Coil On Plug No. 7	8W-10-14
Coil On Plug No. 8	8W-10-14
Coil Rail	8W-10-12
Controller Antilock Brake	8W-10-11, 22
Driver Door Module	8W-10-20
Engine Starter Motor	8W-10-17
Engine Starter Motor Relay	8W-10-17
Fog Lamp Relay	8W-10-16
Fuel Injector No. 1	8W-10-13
Fuel Injector No. 2	8W-10-13
Fuel Injector No. 3	8W-10-13
Fuel Injector No. 4	8W-10-13
Fuel Injector No. 5	8W-10-13
Fuel Injector No. 6	8W-10-13
Fuel Injector No. 7	8W-10-13
Fuel Injector No. 8	8W-10-13
Fuel Pump Module	8W-10-22
Fuel Pump Relay	8W-10-22
Fuse 1 (PDC)	8W-10-7, 9
Fuse 2 (PDC)	8W-10-7, 9
Fuse 3 (PDC)	8W-10-7, 10
Fuse 4 (PDC)	8W-10-7, 11
Fuse 5 (PDC)	8W-10-7, 11
Fuse 6 (PDC)	8W-10-7, 12
Fuse 7 (PDC)	8W-10-7, 16
Fuse 8 (PDC)	8W-10-7, 17
Fuse 10 (PDC)	8W-10-7, 16
Fuse 12 (PDC)	8W-10-7, 20
Fuse 14 (PDC)	8W-10-7, 17
Fuse 15 (PDC)	8W-10-8, 20
Fuse 16 (PDC)	8W-10-12, 15
Fuse 18 (PDC)	8W-10-8, 21
Fuse 19 (PDC)	8W-10-8
Fuse 21 (PDC)	8W-10-8, 22
Fuse 24 (PDC)	8W-10-8, 22
Fuse 25 (PDC)	8W-10-8, 22
Fuse 26 (PDC)	8W-10-12
Fuse 28 (PDC)	8W-10-11
Fuse 3 (JB)	8W-10-10
Fuse 5 (JB)	8W-10-20
Fuse 6 (JB)	8W-10-10
Fuse 7 (JB)	8W-10-20
Fuse 8 (JB)	8W-10-20
Fuse 9 (JB)	8W-10-20
Fuse 11 (JB)	8W-10-9
Fuse 12 (JB)	8W-10-19
Fuse 14 (JB)	8W-10-10
Fuse 15 (JB)	8W-10-10
Fuse 16 (JB)	8W-10-10
Fuse 17 (JB)	8W-10-10
Fuse 18 (JB)	8W-10-20
Fuse 19 (JB)	8W-10-18
Fuse 20 (JB)	8W-10-18
Fuse 21 (JB)	8W-10-19
Fuse 22 (JB)	8W-10-19
Fuse 23 (JB)	8W-10-16
Fuse 24 (JB)	8W-10-16
Fuse 25 (JB)	8W-10-16
Fuse 26 (JB)	8W-10-9
Fuse 28 (JB)	8W-10-19
Fuse 29 (JB)	8W-10-19
Fuse 30 (JB)	8W-10-19
Fuse 31 (JB)	8W-10-18
Fuse 32 (JB)	8W-10-19
Fuse 33 (JB)	8W-10-18
Fusible Link	8W-10-7
G200	8W-10-17
Generator	8W-10-7
High Beam Relay	8W-10-10
Horn No. 1	8W-10-21
Horn No. 2	8W-10-21
Horn Relay	8W-10-21
Hydraulic Cooling Module	8W-10-15
Ignition Switch	8W-10-17, 18, 19
Junction Block	8W-10-9, 10, 16, 18, 19, 20
Low Beam Relay	8W-10-10
Low Beam/Daytime Running Lamp Relay	8W-10-10
Oxygen Sensor 1/1 Upstream	8W-10-12
Oxygen Sensor 1/2 Downstream	8W-10-15
Oxygen Sensor 2/1 Upstream	8W-10-12
Oxygen Sensor 2/2 Downstream	8W-10-15
Oxygen Sensor Downstream Relay	8W-10-15
Park Lamp Relay	8W-10-10
Passenger Door Module	8W-10-20
Power Distribution Center	8W-10-2, 10, 11, 12, 16, 17, 20
Power Distribution Center	8W-10-7, 8, 9, 21, 22
Powertrain Control Module	8W-10-12, 21
Radiator Fan Relay	8W-10-16
Rear Window Defogger	8W-10-9
Rear Window Defogger Relay	8W-10-9
Sunroof Delay Relay	8W-10-16
Trailer Tow Circuit Breaker	8W-10-9
Transmission Control Module	8W-10-11
Transmission Control Relay	8W-10-11
Transmission Solenoid	8W-10-11
Transmission Solenoid/Trs Assembly	8W-10-11

POWER DISTRIBUTION CENTER

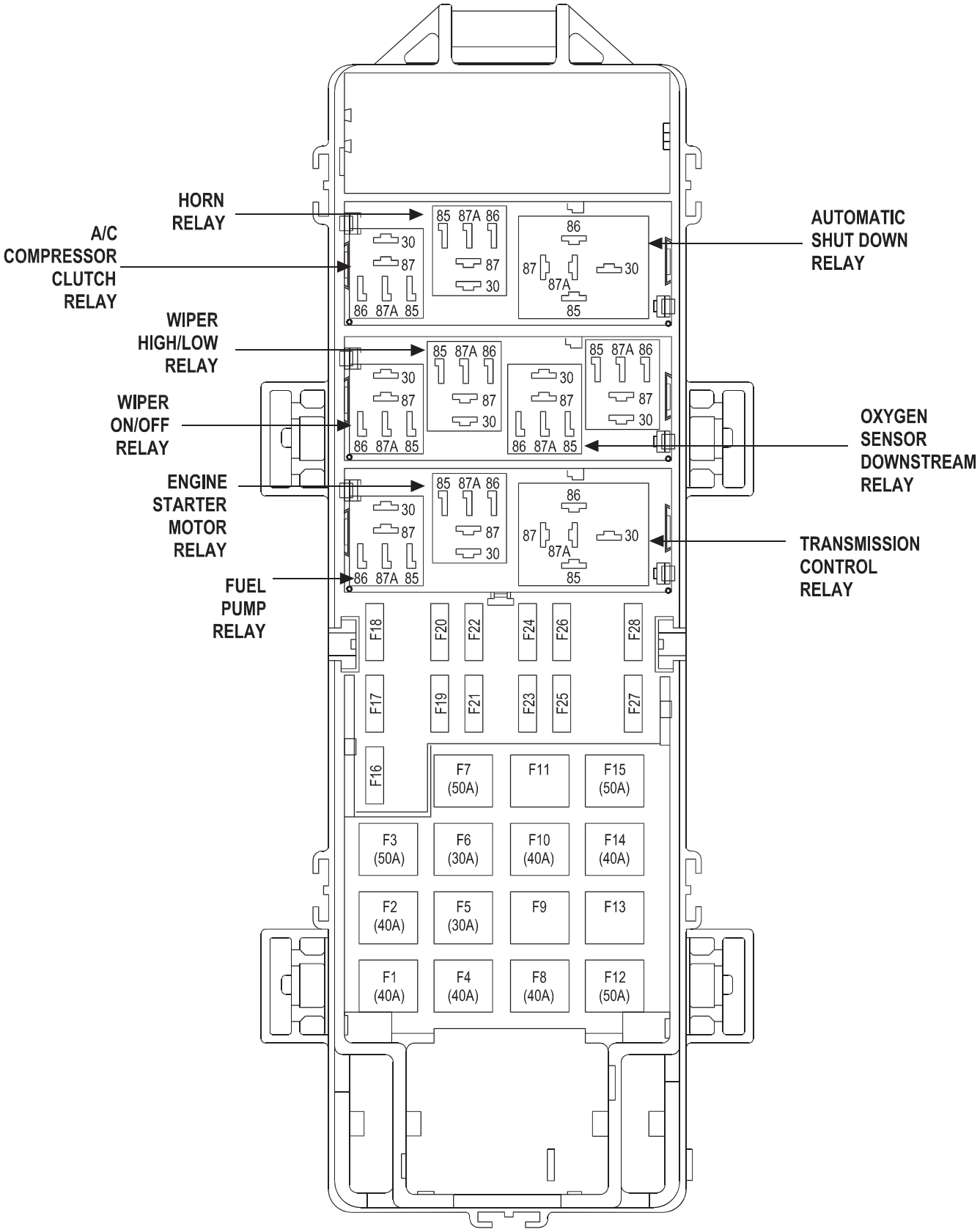

FUSES

FUSE NO.	AMPS	FUSED CIRCUIT	FUNCTION
1	40A	C1 12DG	FUSED B(+)
2	40A	A149 12RD/TN	FUSED B(+)
3	50A	A145 10WT/RD	FUSED B(+)
4	40A	A10 12RD/DG	FUSED B(+)
5	30A	A30 14RD/WT	FUSED B(+)
		A30 14RD/WT ◇◇	
6	30A	A14 14RD/DG	FUSED B(+)
7	50A	A147 10RD/GY	FUSED B(+)
8	40A	A1 12RD	FUSED B(+)
9	-	-	-
10	40A	A16 12GY ◇	FUSED B(+)
11	-	-	-
12	50A	A146 10OR/WT	FUSED B(+)
13	-	-	-
14	40A	A2 12PK/BK	FUSED B(+)
15	50A	A148 10PK/WT	FUSED B(+)
16	10A	F142 18OR/DG	FUSED AUTOMATIC SHUT DOWN RELAY OUTPUT
		F142 18OR/DG	
17	-	-	-
18	15A	F62 18RD	FUSED B(+)
		F62 18RD	
19	10A	A7 14RD/BK	FUSED B(+)
20	-	-	-
21	15A	A17 18RD/BK	FUSED B(+)
22	-	-	-
23	-	-	-
24	20A	A62 16VT/WT	FUSED B(+)
25	20A	A20 12RD/DB	FUSED B(+)
26	15A	F42 18DG/LG	FUSED AUTOMATIC SHUT DOWN RELAY OUTPUT
		F42 18DG/LG # #	
27	-	-	-
28	15A	T60 18BR ◇	FUSED TRANSMISSION CONTROL RELAY OUTPUT

◇ 4.0 L
◇◇ 4.7 L
EXCEPT 4.7 L HIGH OUTPUT

RELAYS

A/C COMPRESSOR CLUTCH RELAY

CAVITY	CIRCUIT	FUNCTION
30	A17 18RD/BK	FUSED B(+)
85	F99 20OR	FUSED IGNITION SWITCH OUTPUT (RUN-START)
86	C13 18DB/OR	A/C COMPRESSOR CLUTCH RELAY CONTROL
87	C2 18DB/YL	A/C COMPRESSOR CLUTCH RELAY OUTPUT
87A	-	-

AUTOMATIC SHUT DOWN RELAY

CAVITY	CIRCUIT	FUNCTION
30	A14 14RD/DG	FUSED B(+)
85	F991 20OR/DB	FUSED IGNITION SWITCH OUTPUT (RUN-START)
	F991 20OR/DB	FUSED IGNITION SWITCH OUTPUT (RUN-START)
86	K51 18DB/YL	AUTOMATIC SHUT DOWN RELAY CONTROL
87	A142 14DG/OR	AUTOMATIC SHUT DOWN RELAY OUTPUT
87A	-	-

ENGINE STARTER MOTOR RELAY

CAVITY	CIRCUIT	FUNCTION
30	A1 12RD	FUSED B(+)
85	F45 20YL/RD	FUSED IGNITION SWITCH OUTPUT (START)
	F45 20YL/RD ◇◇	FUSED IGNITION SWITCH OUTPUT (START)
86	T41 20BR/YL	PARK/NEUTRAL POSITION SWITCH SENSE
87	T40 12LG	ENGINE STARTER MOTOR RELAY OUTPUT
87A	-	-

◇◇ 4.7 L

FUEL PUMP RELAY

CAVITY	CIRCUIT	FUNCTION
30	A62 16VT/WT	FUSED B(+)
85	F991 20OR/DB	FUSED IGNITION SWITCH OUTPUT (RUN-START)
	F991 20OR/DB	FUSED IGNITION SWITCH OUTPUT (RUN-START)
86	K31 18BR	FUEL PUMP RELAY CONTROL
87	A141 16DG/BK	FUEL PUMP RELAY OUTPUT
87A	-	-

HORN RELAY

CAVITY	CIRCUIT	FUNCTION
30	F62 18RD	FUSED B(+)
85	F62 18RD	FUSED B(+)
86	X4 20GY/OR	HORN RELAY CONTROL
87	X2 18DG/RD	HORN RELAY OUTPUT
	X2 18DG/RD	HORN RELAY OUTPUT
87A	-	-

OXYGEN SENSOR DOWNSTREAM RELAY

CAVITY	CIRCUIT	FUNCTION
30	F142 18OR/DG	FUSED AUTOMATIC SHUT DOWN RELAY OUTPUT
	F142 18OR/DG	FUSED AUTOMATIC SHUT DOWN RELAY OUTPUT
85	F142 18OR/DG	FUSED AUTOMATIC SHUT DOWN RELAY OUTPUT
	F142 18OR/DG ◇◇	FUSED AUTOMATIC SHUT DOWN RELAY OUTPUT
86	K251 18LB	OXYGEN SENSOR DOWNSTREAM RELAY CONTROL
87	K200 18VT/OR	OXYGEN SENSOR DOWNSTREAM RELAY OUTPUT
87A	-	-

◇◇ 4.7L

TRANSMISSION CONTROL RELAY

CAVITY	CIRCUIT	FUNCTION
30	A30 14RD/WT	FUSED B(+)
85	K21 18LB/RD ◇	INTAKE AIR TEMPERATURE SENSOR SIGNAL
85	Z1 18BK ◇◇	GROUND
86	K30 20PK/YL	TRANSMISSION CONTROL RELAY CONTROL
87	T16 14RD	TRANSMISSION CONTROL RELAY OUTPUT
	T16 14RD ◇◇	TRANSMISSION CONTROL RELAY OUTPUT
87A	-	-

WIPER HIGH/LOW RELAY

CAVITY	CIRCUIT	FUNCTION
30	V60 16YL/DG	WIPER ON/OFF RELAY OUTPUT
85	Z1 20BK	GROUND
86	V16 20VT	WIPER HIGH/LOW RELAY CONTROL
87	V4 16RD/YL	WIPER HIGH/LOW RELAY HIGH SPEED OUTPUT
87A	V3 16BR/WT	WIPER HIGH/LOW RELAY LOW SPEED OUTPUT

WIPER ON/OFF RELAY

CAVITY	CIRCUIT	FUNCTION
30	V60 16YL/DG	WIPER ON/OFF RELAY OUTPUT
85	V14 20RD/VT	WIPER ON/OFF RELAY CONTROL
86	V6 16DB	FUSED IGNITION SWITCH OUTPUT (RUN-ACC)
87	V6 16DB	FUSED IGNITION SWITCH OUTPUT (RUN-ACC)
87A	V55 16TN/RD	WIPER PARK SWITCH SENSE

◇ 4.0 L
◇◇ 4.7 L

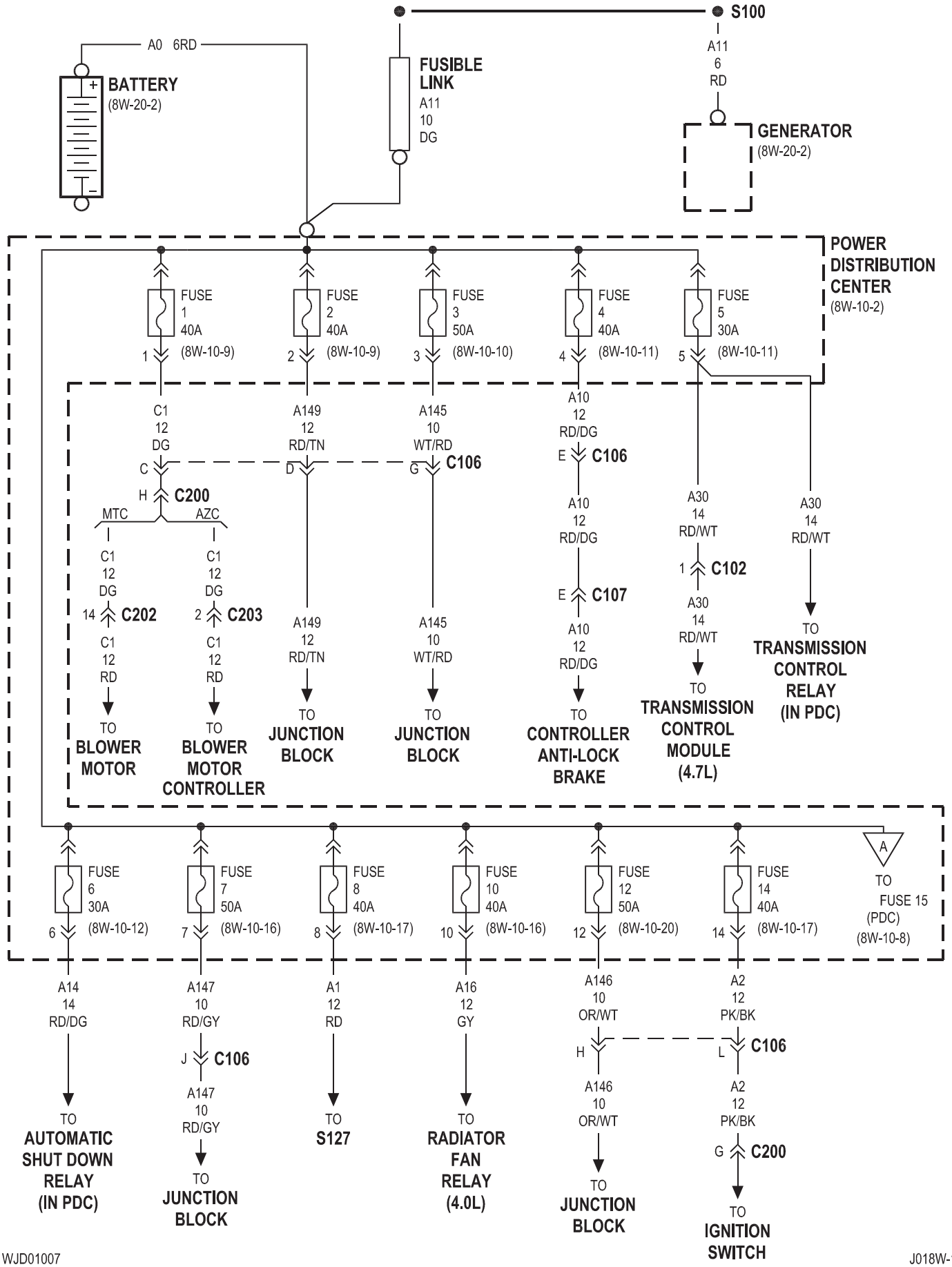
S100
A11
6
RD
A0 6RD
BATTERY
(8W-20-2)
FUSIBLE
LINK
A11
10
DG
GENERATOR
(8W-20-2)
POWER
DISTRIBUTION
CENTER
(8W-10-2)
FUSE
1
40A
(8W-10-9)
FUSE
2
40A
(8W-10-9)
FUSE
3
50A
(8W-10-10)
FUSE
4
40A
(8W-10-11)
FUSE
5
30A
(8W-10-11)
C1
12
DG
C
H
C200
MTC
AZC
C1
12
DG
14
C202
C1
12
DG
2
C203
C1
12
RD
TO
BLOWER
MOTOR
C1
12
RD
TO
BLOWER
MOTOR
CONTROLLER
A149
12
RD/TN
D
A149
12
RD/TN
TO
JUNCTION
BLOCK
A145
10
WT/RD
G
C106
A145
10
WT/RD
TO
JUNCTION
BLOCK
A10
12
RD/DG
E
C106
A10
12
RD/DG
E
C107
A10
12
RD/DG
TO
CONTROLLER
ANTI-LOCK
BRAKE
A30
14
RD/WT
1
C102
A30
14
RD/WT
TO
TRANSMISSION
CONTROL
MODULE
(4.7L)
A30
14
RD/WT
TO
TRANSMISSION
CONTROL
RELAY
(IN PDC)
FUSE
6
30A
(8W-10-12)
FUSE
7
50A
(8W-10-16)
FUSE
8
40A
(8W-10-17)
FUSE
10
40A
(8W-10-16)
FUSE
12
50A
(8W-10-20)
FUSE
14
40A
(8W-10-17)
A
TO
FUSE 15
(PDC)
(8W-10-8)
A14
14
RD/DG
TO
AUTOMATIC
SHUT DOWN
RELAY
(IN PDC)
A147
10
RD/GY
J
C106
A147
10
RD/GY
TO
JUNCTION
BLOCK
A1
12
RD
TO
S127
A16
12
GY
TO
RADIATOR
FAN
RELAY
(4.0L)
A146
10
OR/WT
H
A146
10
OR/WT
TO
JUNCTION
BLOCK
A2
12
PK/BK
L
C106
A2
12
PK/BK
G
C200
TO
IGNITION
SWITCH

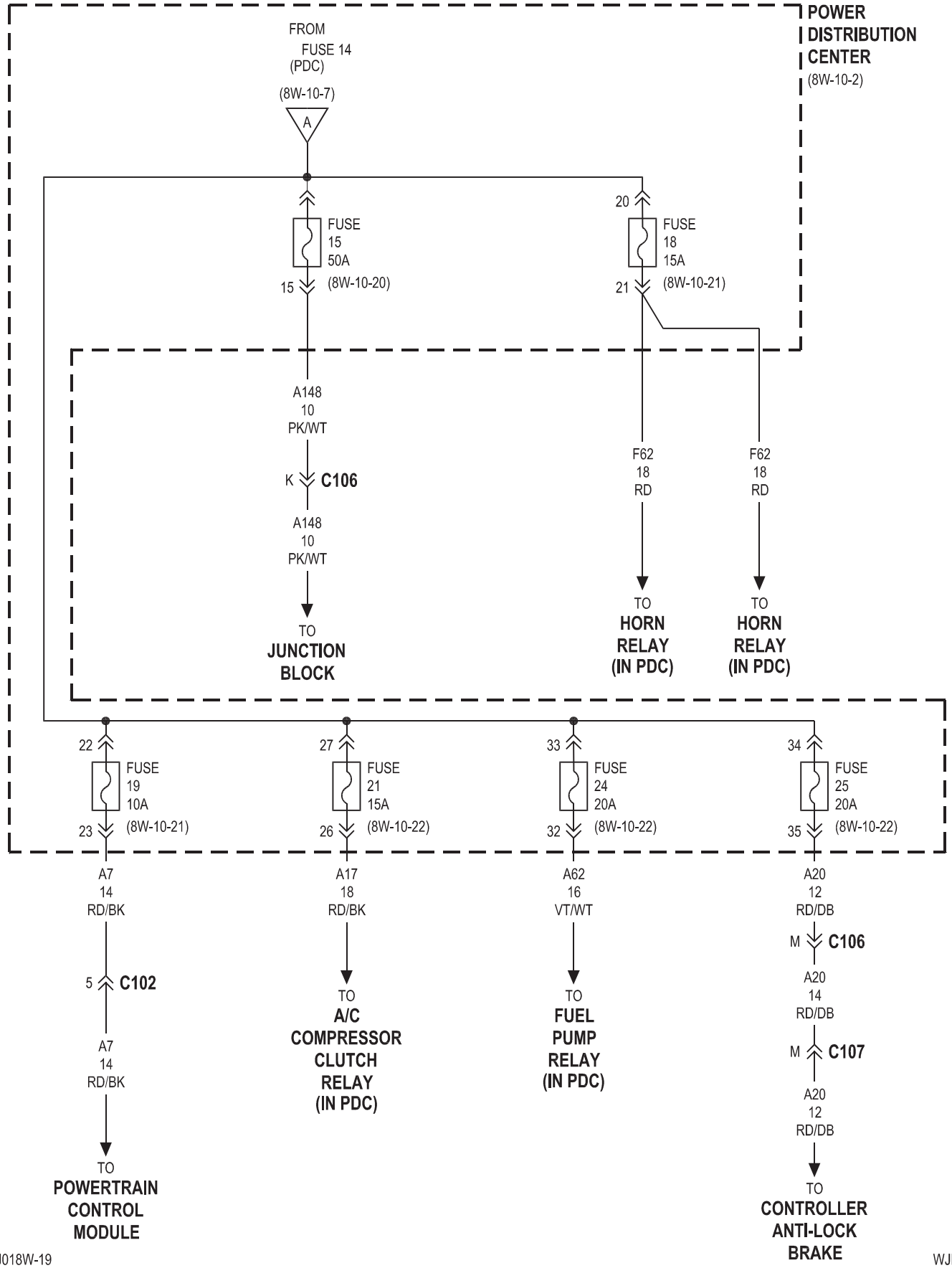

J018W-19 WJD01008

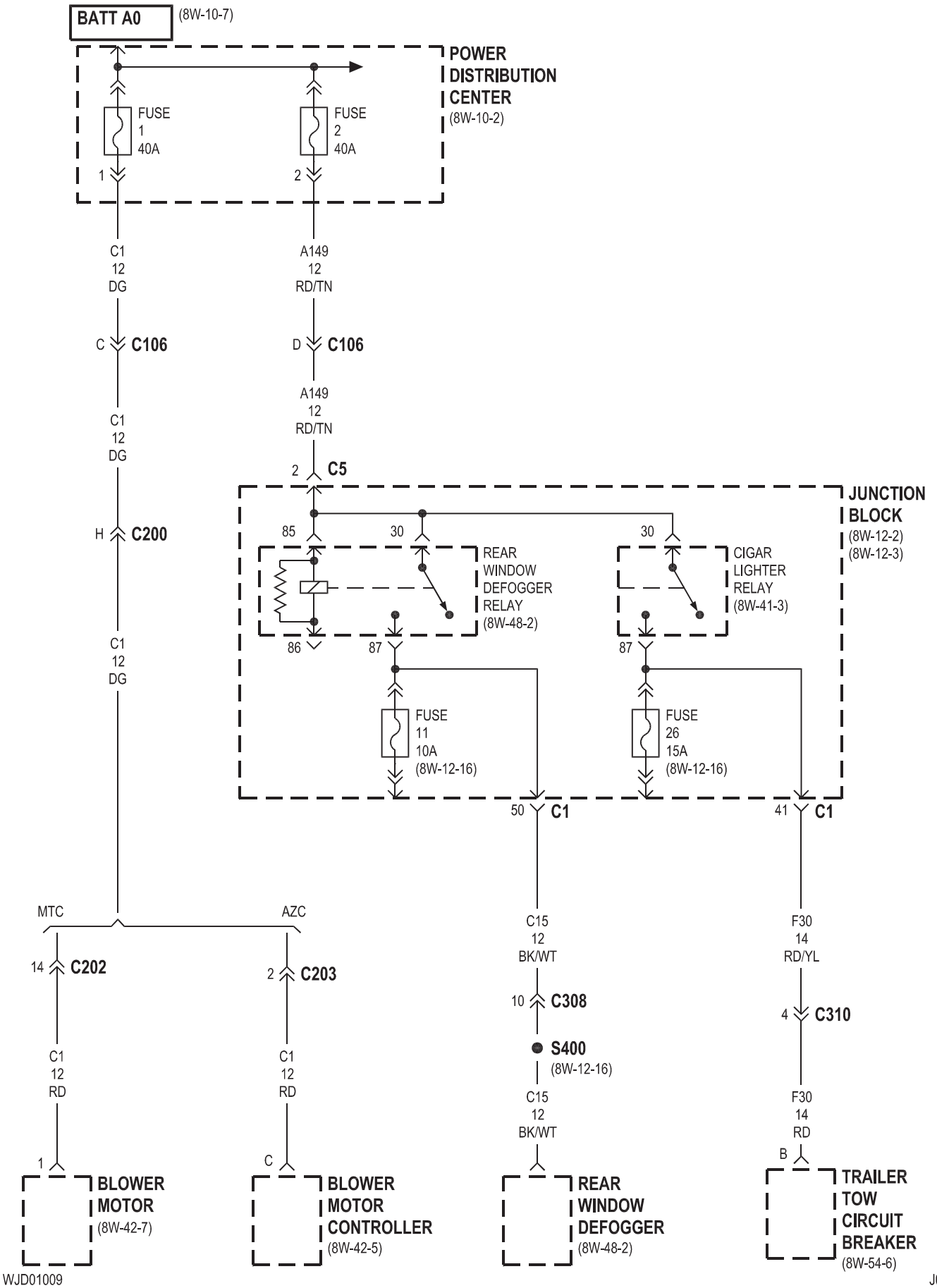

WJD01009 J018W-19

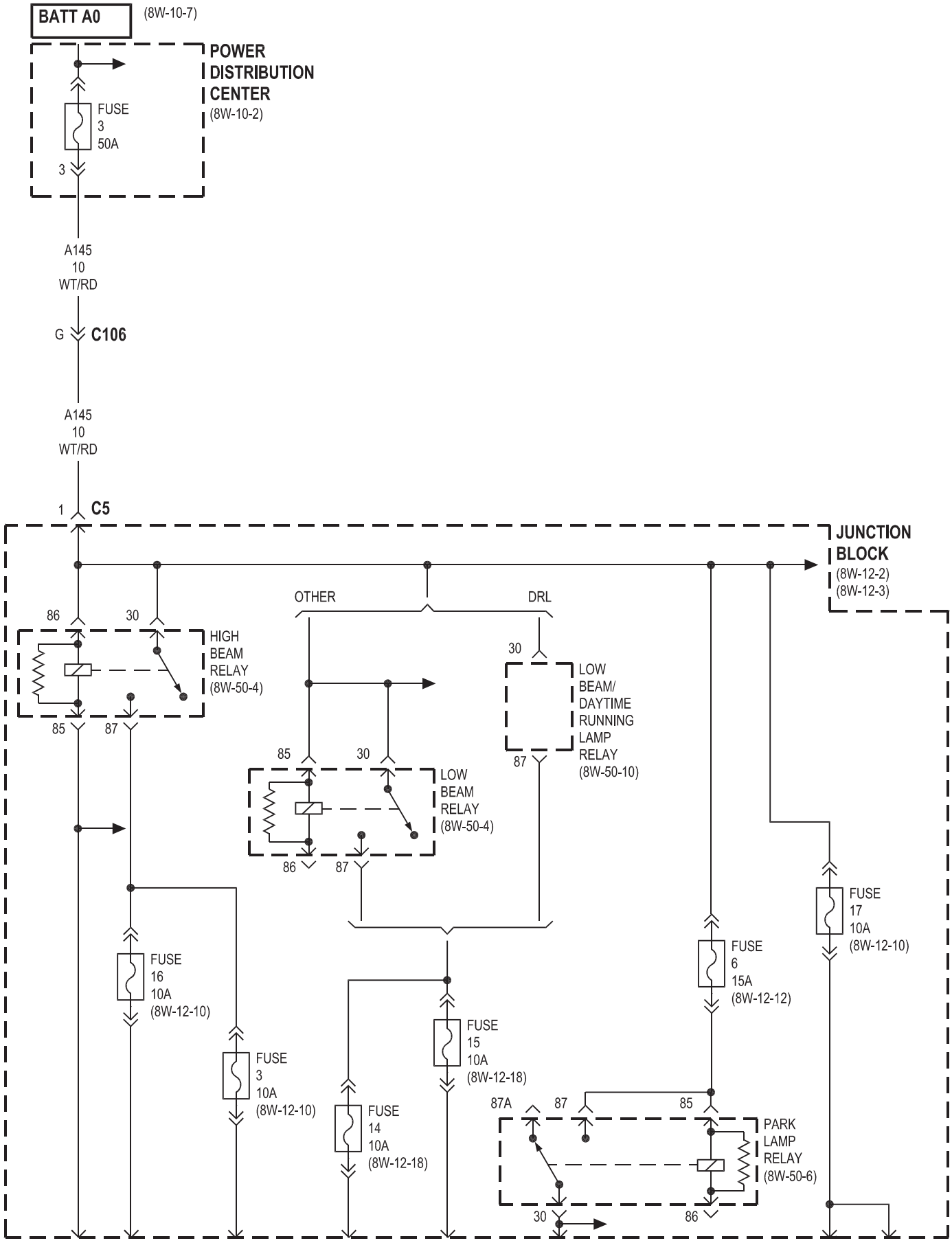
BATT A0
(8W-10-7)
POWER DISTRIBUTION CENTER
(8W-10-2)
FUSE 3 50A
3
A145 10 WT/RD
G
C106
A145 10 WT/RD
1
C5
JUNCTION BLOCK
(8W-12-2)
(8W-12-3)
OTHER
DRL
86
30
HIGH BEAM RELAY
(8W-50-4)
85
87
30
LOW BEAM/ DAYTIME RUNNING LAMP RELAY
(8W-50-10)
87
85
30
LOW BEAM RELAY
(8W-50-4)
86
87
FUSE 16 10A
(8W-12-10)
FUSE 3 10A
(8W-12-10)
FUSE 14 10A
(8W-12-18)
FUSE 15 10A
(8W-12-18)
FUSE 6 15A
(8W-12-12)
FUSE 17 10A
(8W-12-10)
87A
87
85
PARK LAMP RELAY
(8W-50-6)
30
86

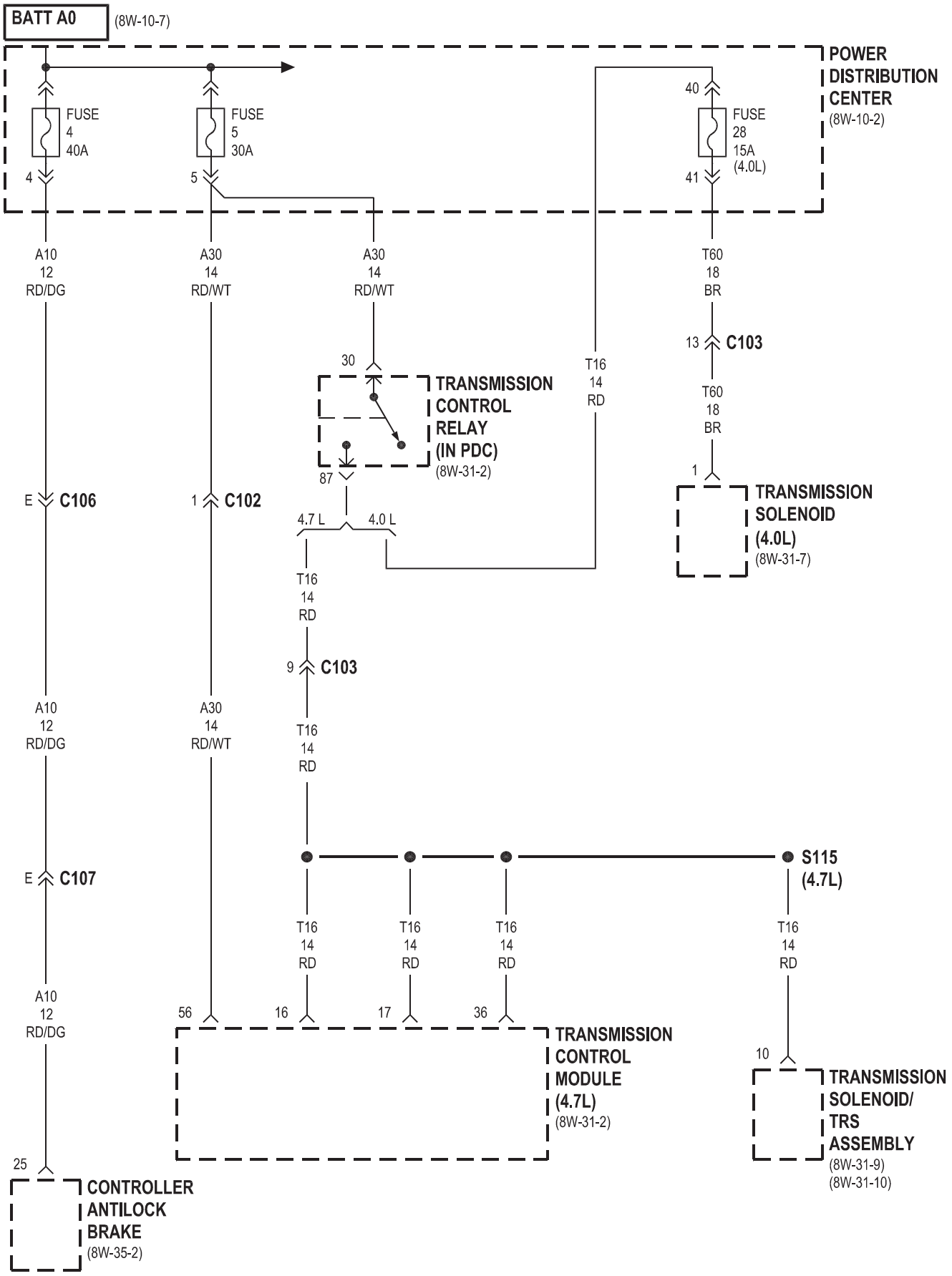
BATT A0
(8W-10-7)
POWER DISTRIBUTION CENTER
(8W-10-2)
FUSE 4 40A
FUSE 5 30A
FUSE 28 15A (4.0L)
4
5
40
41
A10 12 RD/DG
A30 14 RD/WT
A30 14 RD/WT
T60 18 BR
13
C103
T60 18 BR
T16 14 RD
30
TRANSMISSION CONTROL RELAY (IN PDC)
(8W-31-2)
87
1
TRANSMISSION SOLENOID (4.0L)
(8W-31-7)
E
C106
1
C102
4.7 L
4.0 L
T16 14 RD
9
C103
A10 12 RD/DG
A30 14 RD/WT
T16 14 RD
E
C107
S115 (4.7L)
T16 14 RD
T16 14 RD
T16 14 RD
T16 14 RD
A10 12 RD/DG
56
16
17
36
TRANSMISSION CONTROL MODULE (4.7L)
(8W-31-2)
10
TRANSMISSION SOLENOID/ TRS ASSEMBLY
(8W-31-9)
(8W-31-10)
25
CONTROLLER ANTILOCK BRAKE
(8W-35-2)

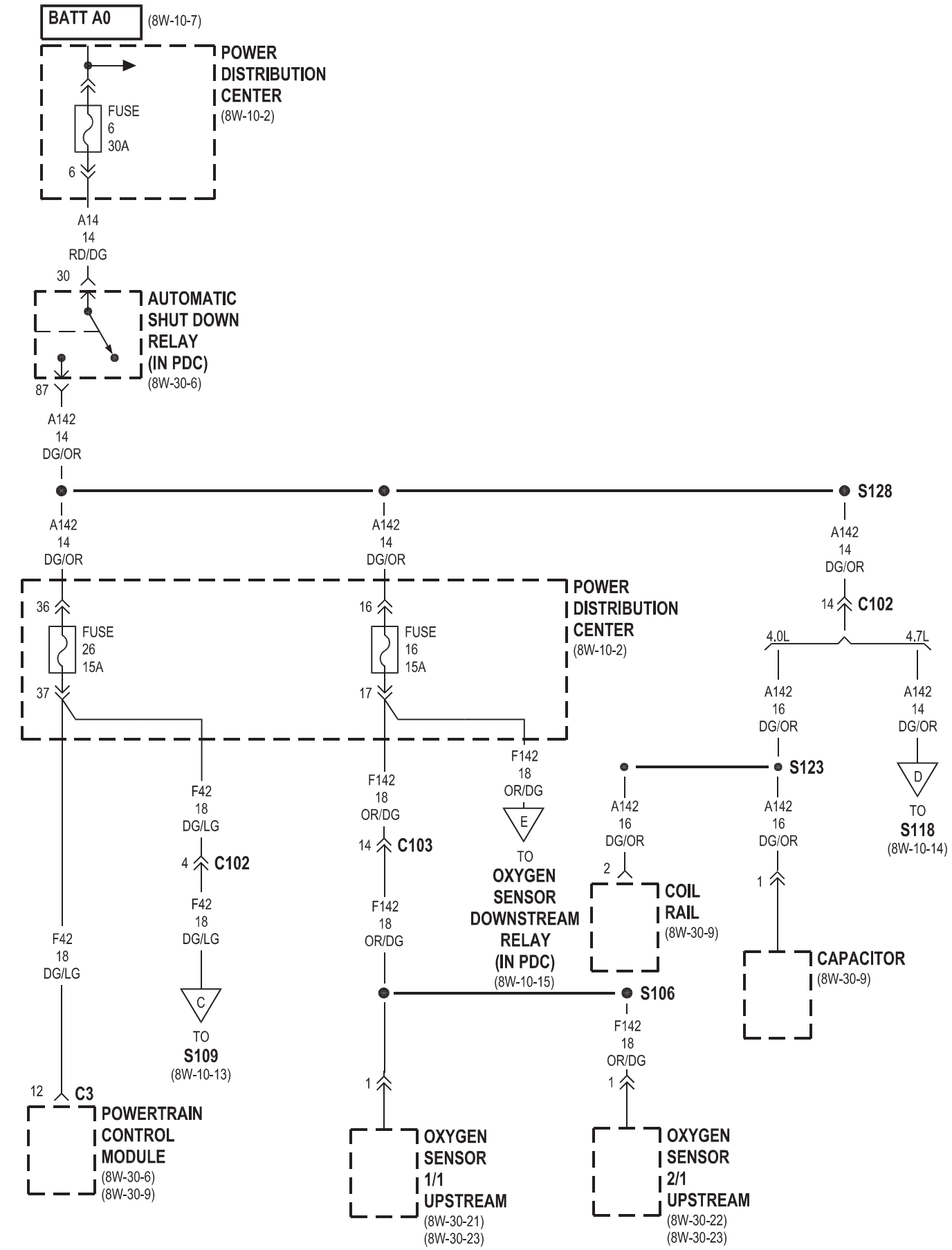
BATT A0
(8W-10-7)
POWER DISTRIBUTION CENTER
(8W-10-2)
FUSE 6 30A
6
A14 14 RD/DG
30
AUTOMATIC SHUT DOWN RELAY (IN PDC)
(8W-30-6)
87
A142 14 DG/OR
S128
A142 14 DG/OR
A142 14 DG/OR
A142 14 DG/OR
POWER DISTRIBUTION CENTER
(8W-10-2)
36
FUSE 26 15A
37
16
FUSE 16 15A
17
14 C102
4.0L
4.7L
A142 16 DG/OR
A142 14 DG/OR
S123
D
TO S118
(8W-10-14)
F42 18 DG/LG
4 C102
F42 18 DG/LG
C
TO S109
(8W-10-13)
F142 18 OR/DG
14 C103
F142 18 OR/DG
F142 18 OR/DG
E
TO OXYGEN SENSOR DOWNSTREAM RELAY (IN PDC)
(8W-10-15)
A142 16 DG/OR
2
COIL RAIL
(8W-30-9)
A142 16 DG/OR
1
CAPACITOR
(8W-30-9)
S106
F142 18 OR/DG
1
F42 18 DG/LG
12 C3
POWERTRAIN CONTROL MODULE
(8W-30-6)
(8W-30-9)
1
OXYGEN SENSOR 1/1 UPSTREAM
(8W-30-21)
(8W-30-23)
OXYGEN SENSOR 2/1 UPSTREAM
(8W-30-22)
(8W-30-23)

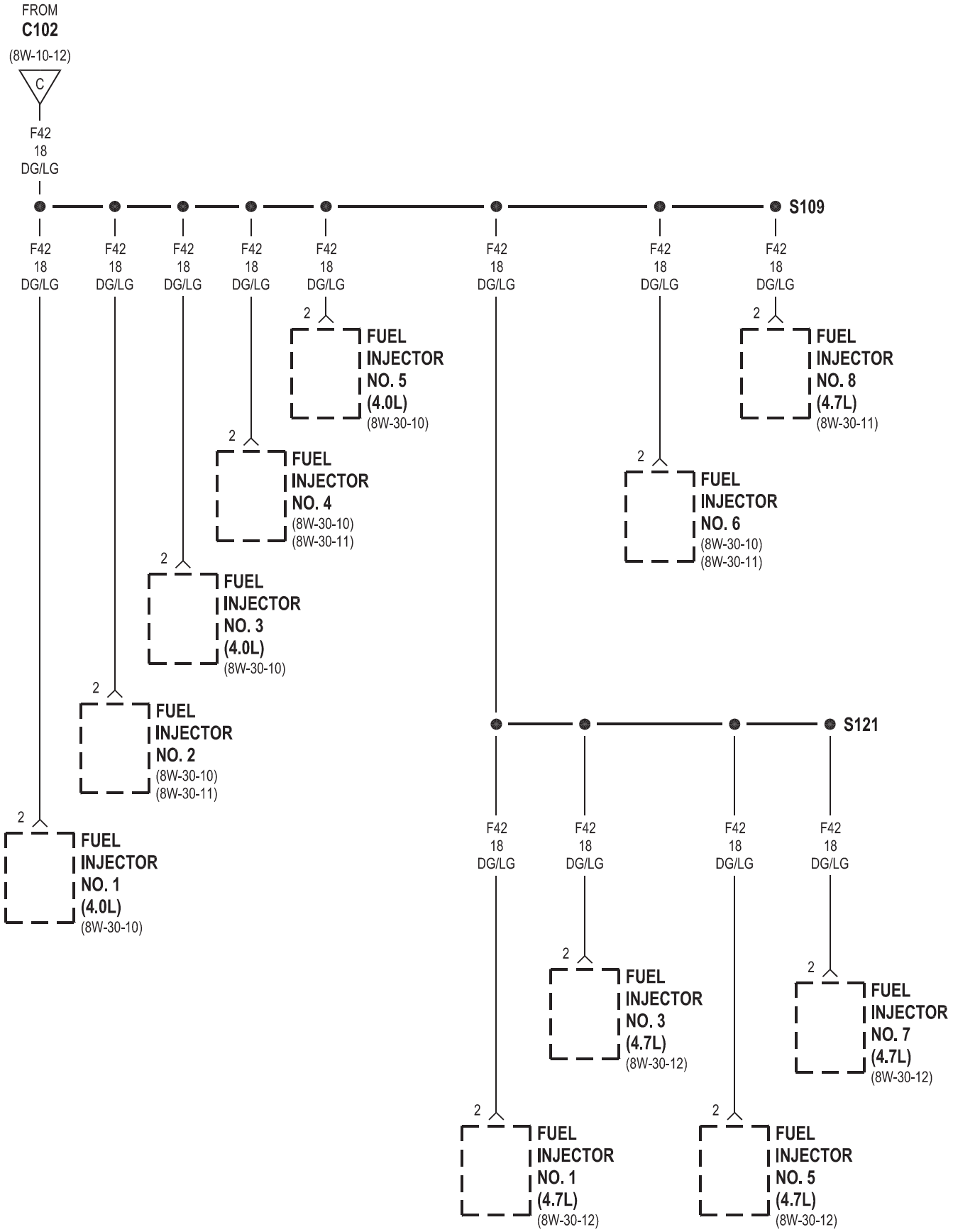
FROM
C102
(8W-10-12)
C
F42
18
DG/LG
S109
FUEL INJECTOR NO. 5 (4.0L) (8W-30-10)
FUEL INJECTOR NO. 8 (4.7L) (8W-30-11)
FUEL INJECTOR NO. 4 (8W-30-10) (8W-30-11)
FUEL INJECTOR NO. 6 (8W-30-10) (8W-30-11)
FUEL INJECTOR NO. 3 (4.0L) (8W-30-10)
FUEL INJECTOR NO. 2 (8W-30-10) (8W-30-11)
FUEL INJECTOR NO. 1 (4.0L) (8W-30-10)
S121
FUEL INJECTOR NO. 3 (4.7L) (8W-30-12)
FUEL INJECTOR NO. 7 (4.7L) (8W-30-12)
FUEL INJECTOR NO. 1 (4.7L) (8W-30-12)
FUEL INJECTOR NO. 5 (4.7L) (8W-30-12)

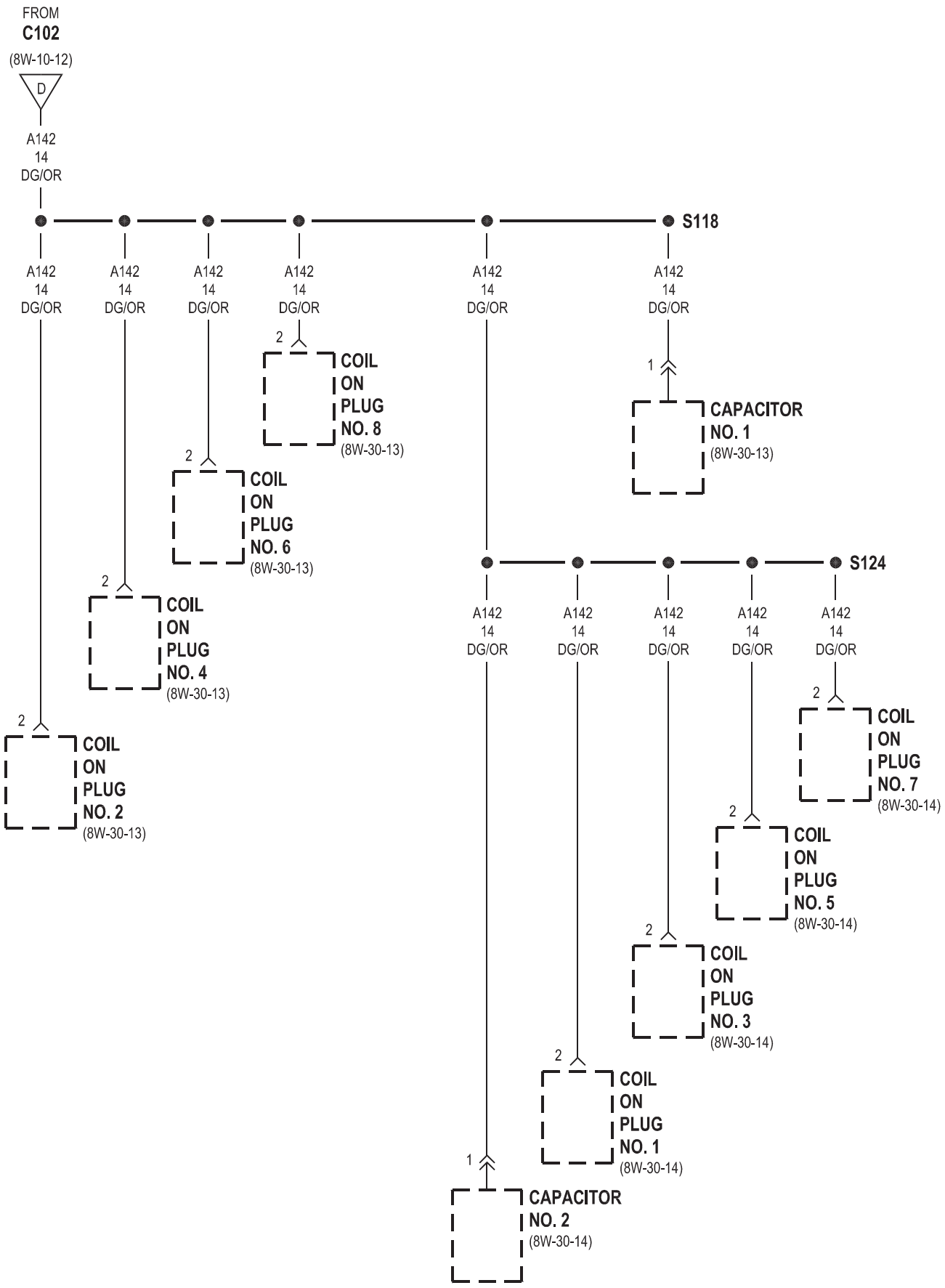
FROM
C102
(8W-10-12)
D
A142
14
DG/OR
S118
A142
14
DG/OR
2
COIL
ON
PLUG
NO. 8
(8W-30-13)
1
CAPACITOR
NO. 1
(8W-30-13)
COIL
ON
PLUG
NO. 6
(8W-30-13)
COIL
ON
PLUG
NO. 4
(8W-30-13)
COIL
ON
PLUG
NO. 2
(8W-30-13)
S124
COIL
ON
PLUG
NO. 7
(8W-30-14)
COIL
ON
PLUG
NO. 5
(8W-30-14)
COIL
ON
PLUG
NO. 3
(8W-30-14)
COIL
ON
PLUG
NO. 1
(8W-30-14)
CAPACITOR
NO. 2
(8W-30-14)

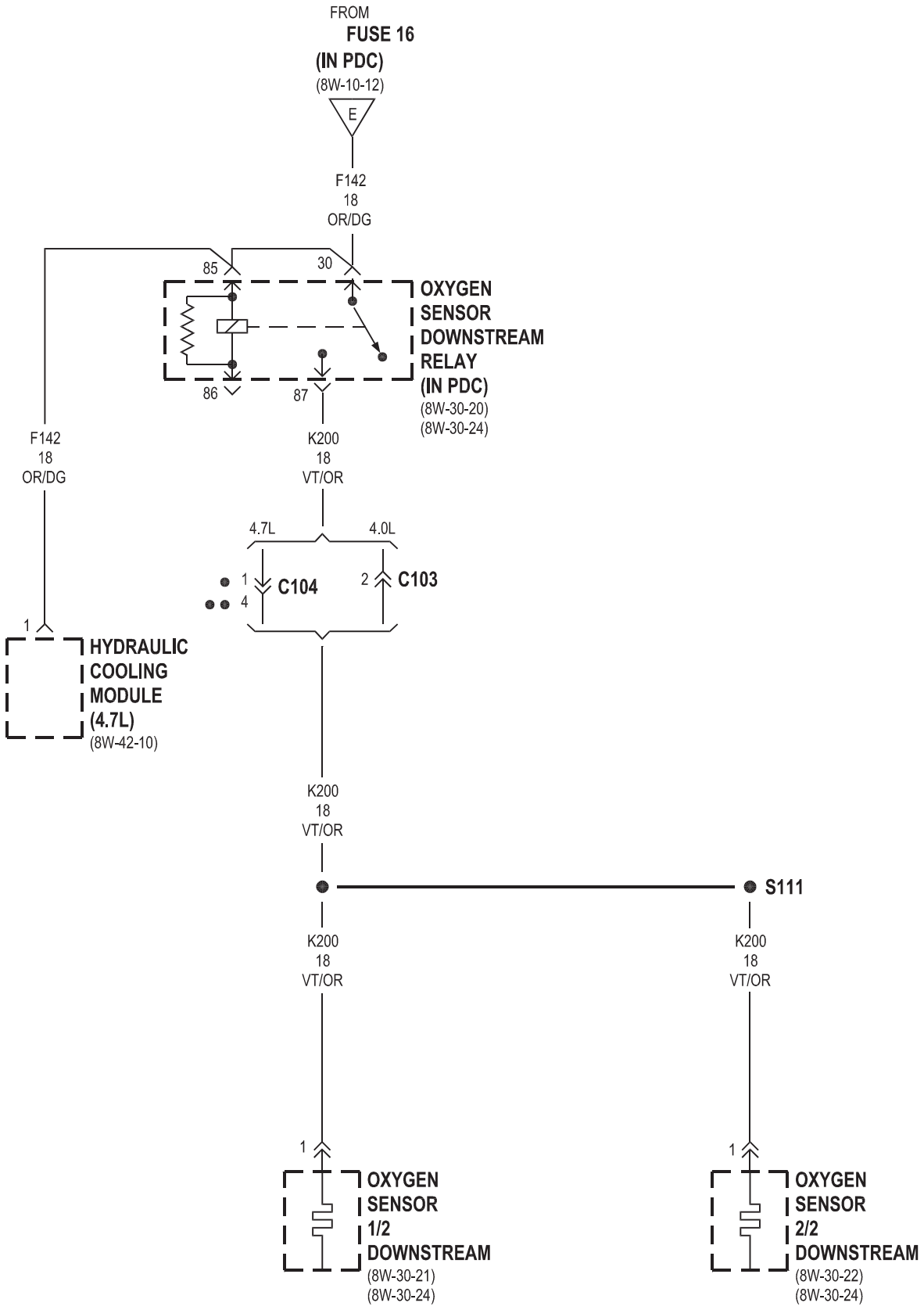

● 4.7L EXCEPT HIGH OUTPUT
●● 4.7L HIGH OUTPUT

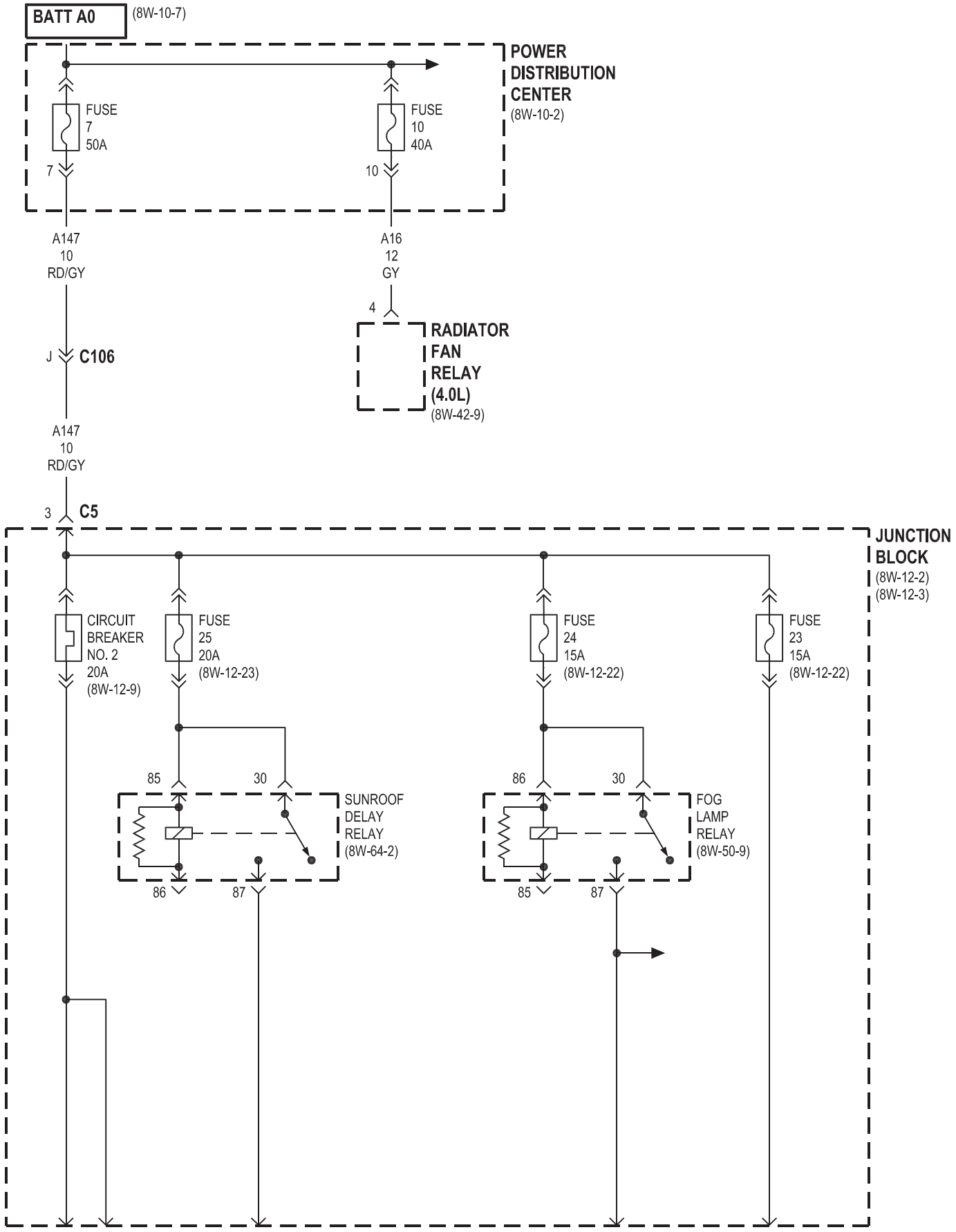
BATT A0
(8W-10-7)
POWER DISTRIBUTION CENTER
(8W-10-2)
FUSE 7 50A
FUSE 10 40A
7
10
A147 10 RD/GY
A16 12 GY
4
RADIATOR FAN RELAY (4.0L)
(8W-42-9)
J
C106
A147 10 RD/GY
3
C5
JUNCTION BLOCK
(8W-12-2)
(8W-12-3)
CIRCUIT BREAKER NO. 2 20A
(8W-12-9)
FUSE 25 20A
(8W-12-23)
FUSE 24 15A
(8W-12-22)
FUSE 23 15A
(8W-12-22)
85
30
86
87
SUNROOF DELAY RELAY
(8W-64-2)
86
30
85
87
FOG LAMP RELAY
(8W-50-9)

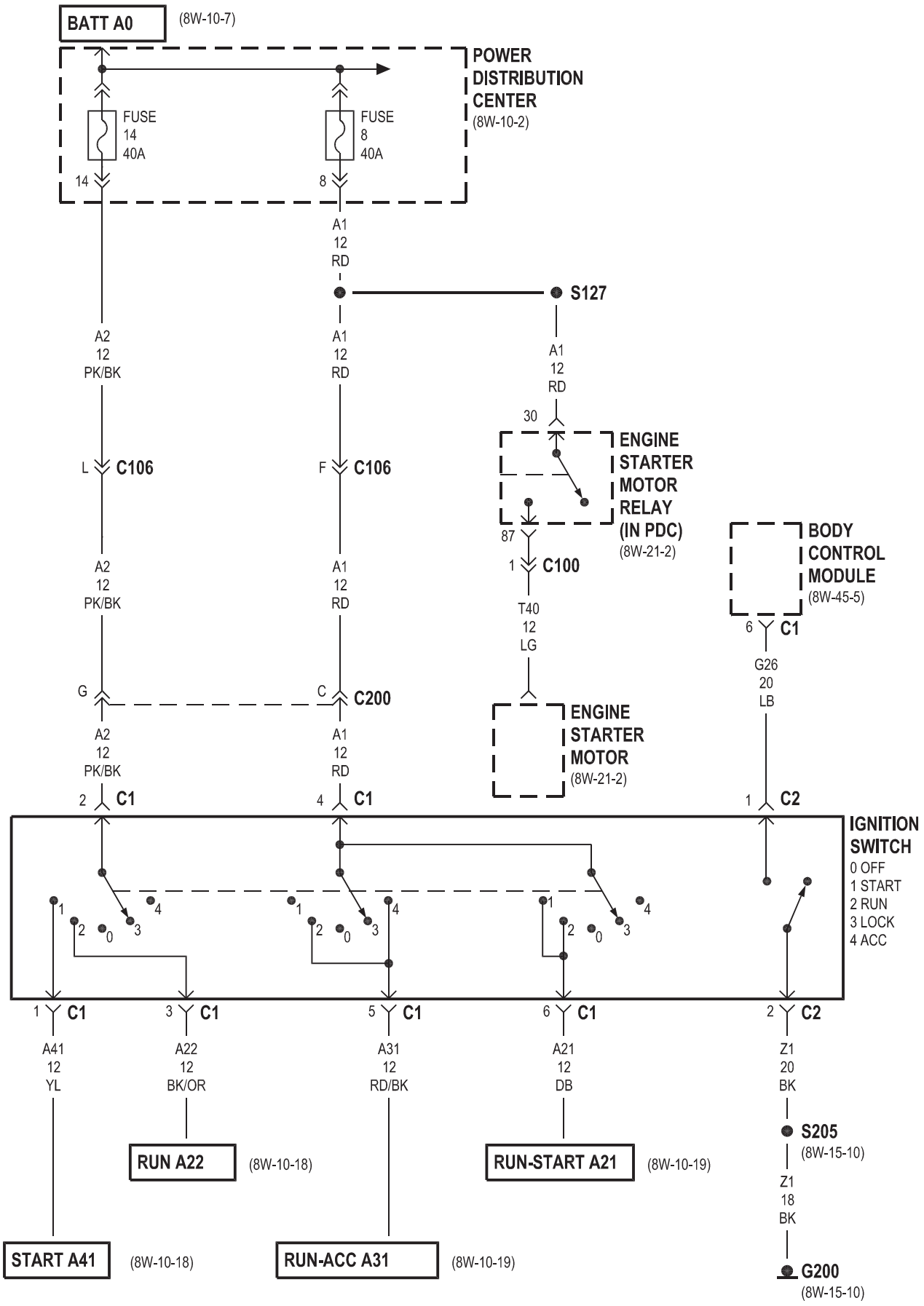
BATT A0
(8W-10-7)
POWER DISTRIBUTION CENTER
(8W-10-2)
FUSE 14 40A
FUSE 8 40A
14
8
A1 12 RD
S127
A2 12 PK/BK
A1 12 RD
A1 12 RD
30
ENGINE STARTER MOTOR RELAY (IN PDC)
(8W-21-2)
L C106
F C106
87
1 C100
BODY CONTROL MODULE
(8W-45-5)
A2 12 PK/BK
A1 12 RD
T40 12 LG
6 C1
G26 20 LB
G
C C200
ENGINE STARTER MOTOR
(8W-21-2)
A2 12 PK/BK
A1 12 RD
2 C1
4 C1
1 C2
IGNITION SWITCH
0 OFF
1 START
2 RUN
3 LOCK
4 ACC
1 C1
3 C1
5 C1
6 C1
2 C2
A41 12 YL
A22 12 BK/OR
A31 12 RD/BK
A21 12 DB
Z1 20 BK
S205
(8W-15-10)
RUN A22
(8W-10-18)
RUN-START A21
(8W-10-19)
Z1 18 BK
START A41
(8W-10-18)
RUN-ACC A31
(8W-10-19)
G200
(8W-15-10)

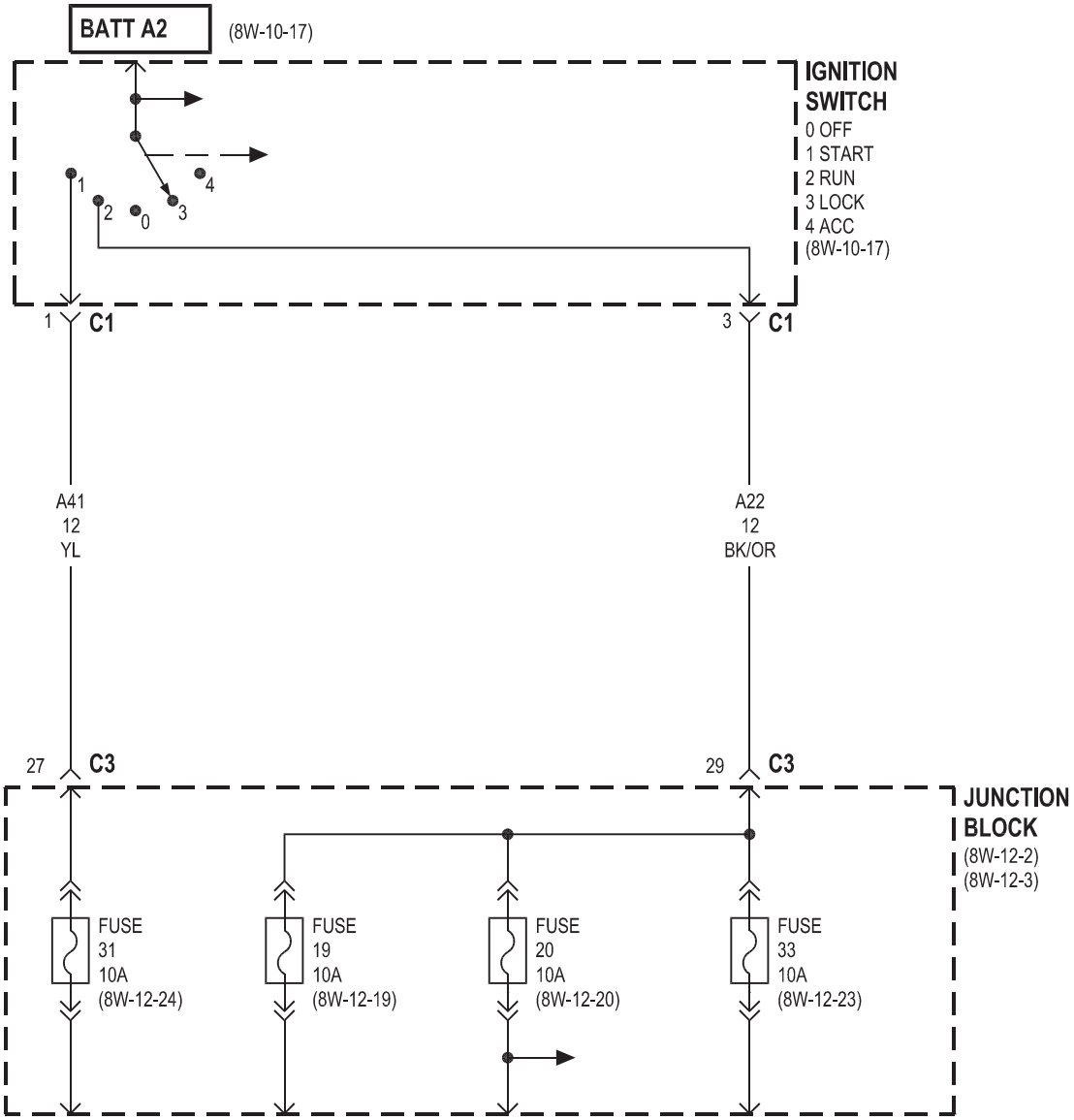
BATT A2
(8W-10-17)
IGNITION SWITCH
0 OFF
1 START
2 RUN
3 LOCK
4 ACC
(8W-10-17)
1
2
0
3
4
1
C1
3
C1
A41
12
YL
A22
12
BK/OR
27
C3
29
C3
JUNCTION BLOCK
(8W-12-2)
(8W-12-3)
FUSE
31
10A
(8W-12-24)
FUSE
19
10A
(8W-12-19)
FUSE
20
10A
(8W-12-20)
FUSE
33
10A
(8W-12-23)

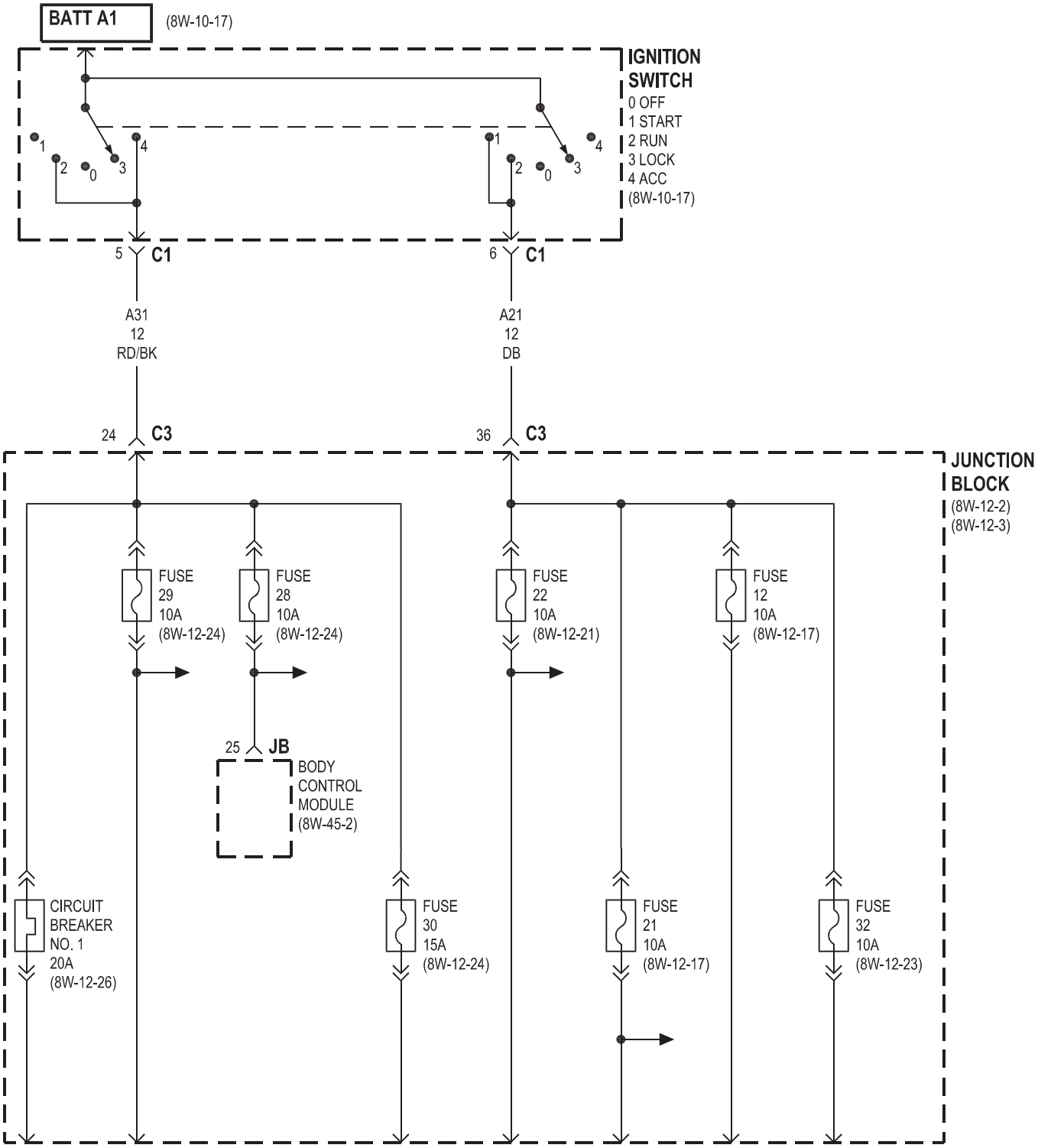
BATT A1
(8W-10-17)
IGNITION SWITCH
0 OFF
1 START
2 RUN
3 LOCK
4 ACC
(8W-10-17)
5 C1
6 C1
A31
12
RD/BK
A21
12
DB
24 C3
36 C3
JUNCTION BLOCK
(8W-12-2)
(8W-12-3)
FUSE 29 10A (8W-12-24)
FUSE 28 10A (8W-12-24)
FUSE 22 10A (8W-12-21)
FUSE 12 10A (8W-12-17)
25 JB
BODY CONTROL MODULE (8W-45-2)
CIRCUIT BREAKER NO. 1 20A (8W-12-26)
FUSE 30 15A (8W-12-24)
FUSE 21 10A (8W-12-17)
FUSE 32 10A (8W-12-23)

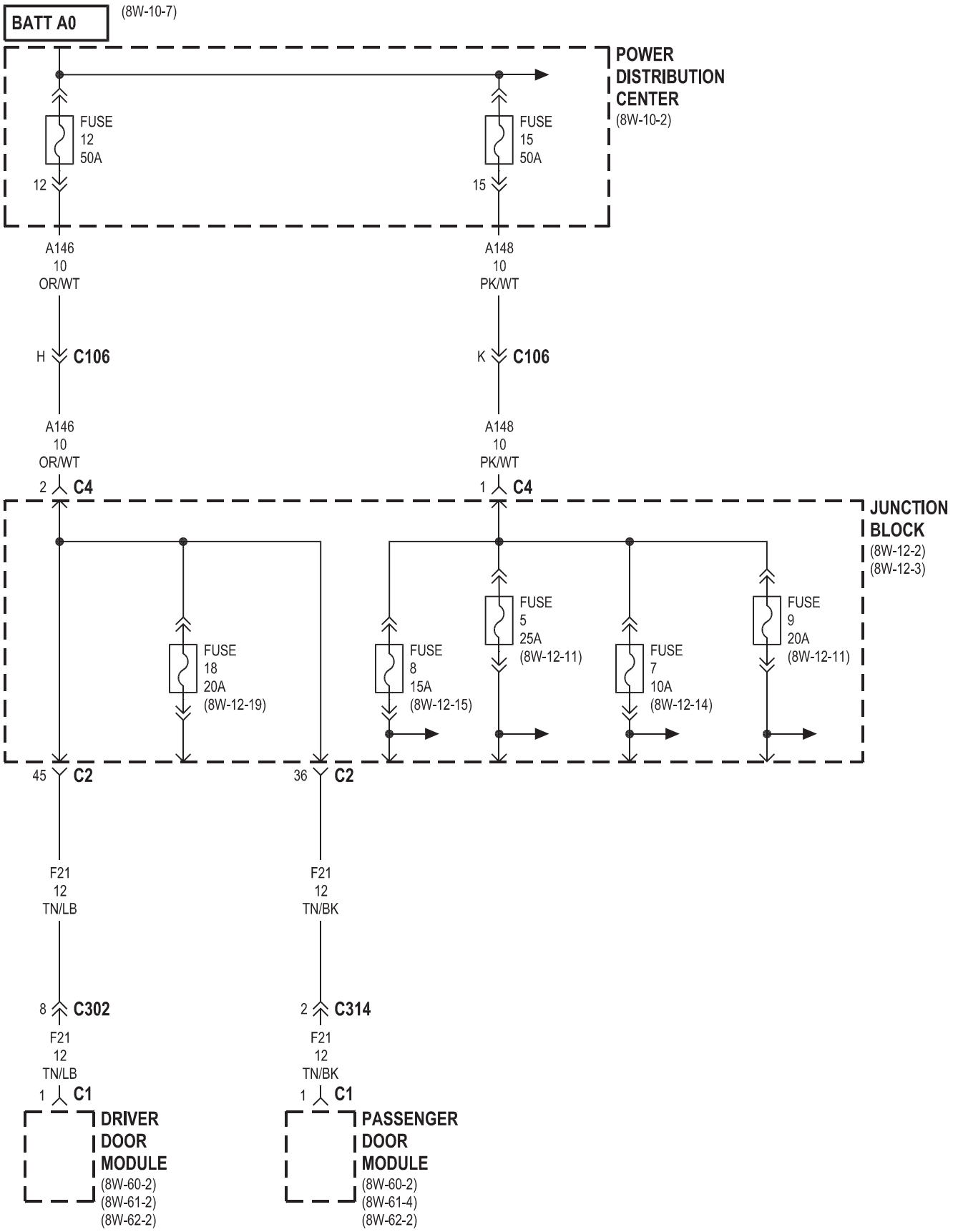
BATT A0
(8W-10-7)
POWER DISTRIBUTION CENTER
(8W-10-2)
FUSE 12 50A
FUSE 15 50A
12
15
A146 10 OR/WT
A148 10 PK/WT
H C106
K C106
A146 10 OR/WT
A148 10 PK/WT
2 C4
1 C4
JUNCTION BLOCK
(8W-12-2)
(8W-12-3)
FUSE 18 20A (8W-12-19)
FUSE 8 15A (8W-12-15)
FUSE 5 25A (8W-12-11)
FUSE 7 10A (8W-12-14)
FUSE 9 20A (8W-12-11)
45 C2
36 C2
F21 12 TN/LB
F21 12 TN/BK
8 C302
2 C314
F21 12 TN/LB
F21 12 TN/BK
1 C1
1 C1
DRIVER DOOR MODULE
(8W-60-2)
(8W-61-2)
(8W-62-2)
PASSENGER DOOR MODULE
(8W-60-2)
(8W-61-4)
(8W-62-2)

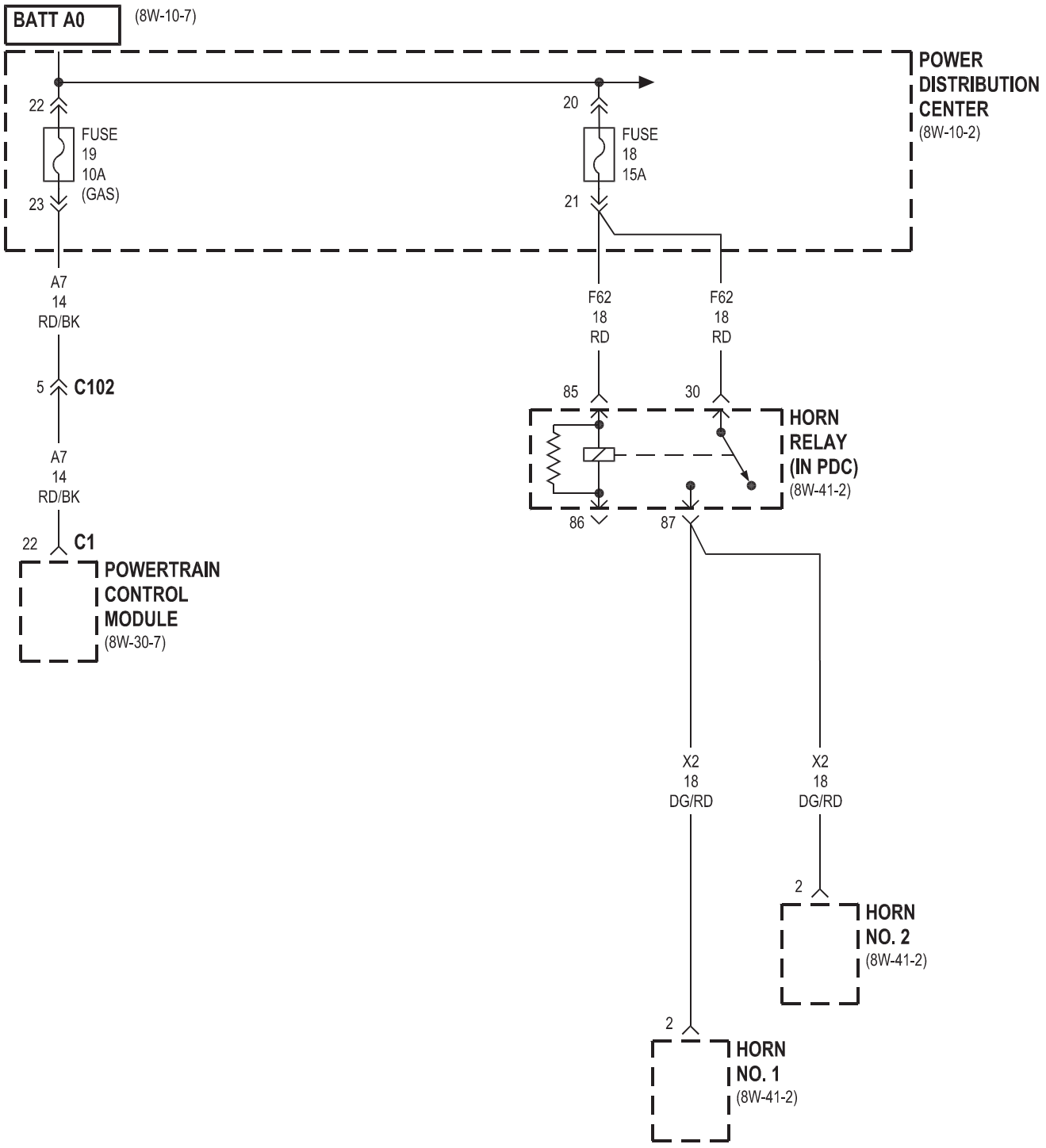
BATT A0
(8W-10-7)
POWER DISTRIBUTION CENTER
(8W-10-2)
22
FUSE 19 10A (GAS)
23
20
FUSE 18 15A
21
A7 14 RD/BK
F62 18 RD
F62 18 RD
5
C102
85
30
HORN RELAY (IN PDC)
(8W-41-2)
A7 14 RD/BK
86
87
22
C1
POWERTRAIN CONTROL MODULE
(8W-30-7)
X2 18 DG/RD
X2 18 DG/RD
2
HORN NO. 2
(8W-41-2)
2
HORN NO. 1
(8W-41-2)

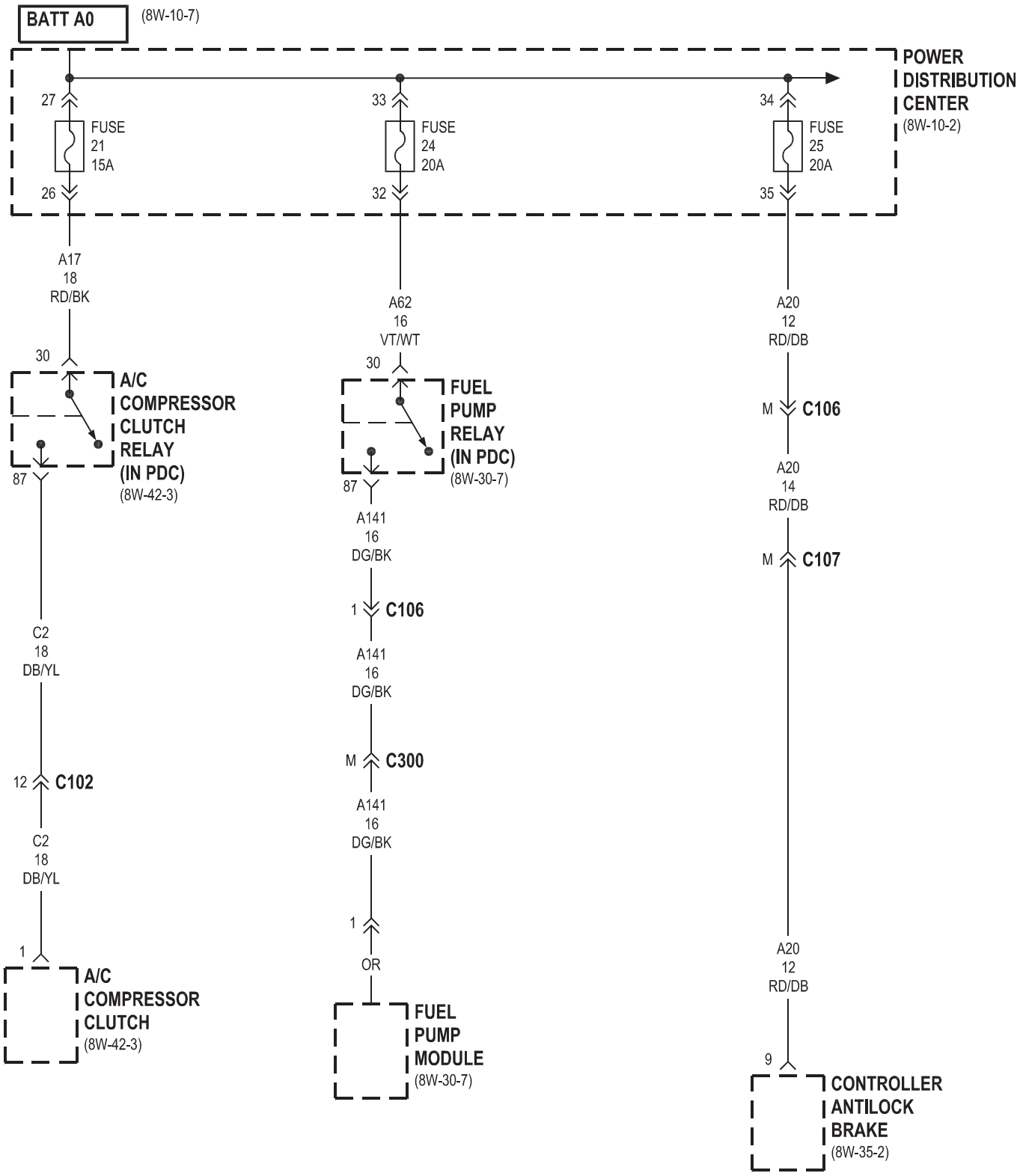
BATT A0
(8W-10-7)
POWER DISTRIBUTION CENTER
(8W-10-2)
27
FUSE 21 15A
26
33
FUSE 24 20A
32
34
FUSE 25 20A
35
A17 18 RD/BK
30
A/C COMPRESSOR CLUTCH RELAY (IN PDC)
(8W-42-3)
87
C2 18 DB/YL
12
C102
C2 18 DB/YL
1
A/C COMPRESSOR CLUTCH
(8W-42-3)
A62 16 VT/WT
30
FUEL PUMP RELAY (IN PDC)
(8W-30-7)
87
A141 16 DG/BK
1
C106
A141 16 DG/BK
M
C300
A141 16 DG/BK
1
OR
FUEL PUMP MODULE
(8W-30-7)
A20 12 RD/DB
M
C106
A20 14 RD/DB
M
C107
A20 12 RD/DB
9
CONTROLLER ANTILOCK BRAKE
(8W-35-2)

8W-12 JUNCTION BLOCK

Component	Page
A/C Compressor Clutch Relay	8W-12-17
Airbag Control Module	8W-12-23
Automatic Day/Night Mirror	8W-12-21
Automatic Headlamp Light Sensor/VTSS LED	8W-12-14
Automatic Shut Down Relay	8W-12-17
Automatic Zone Control Module	8W-12-14, 16, 20
Body Control Module	8W-12-10, 12, 14, 16, 18, 19, 21, 22, 23, 24, 25, 26, 27, 28, 30, 31
Brake Lamp Switch	8W-12-22
Brake Transmission Shift Interlock Solenoid	8W-12-17
Cargo Lamp	8W-12-15, 19, 25
Cigar Lighter	8W-12-16
Cigar Lighter Relay	8W-12-6, 16, 24
Circuit Breaker No. 1 (JB)	8W-12-26
Circuit Breaker No. 2 (JB)	8W-12-9
Clockspring	8W-12-28
Combination Flasher	8W-12-8, 10, 20, 25, 29, 31
Controller Antilock Brake	8W-12-19, 28
Data Link Connector	8W-12-10
Driver Door Module	8W-12-30
Driver Heated Seat Switch	8W-12-20
Driver Lumbar Switch	8W-12-9
Driver Power Seat Switch	8W-12-9
Electric Brake	8W-12-19
Engine Starter Motor Relay	8W-12-24
Evap/Purge Solenoid	8W-12-17
Fog Lamp Relay	8W-12-6, 22
Front Power Outlet	8W-12-11
Front Wiper Motor	8W-12-26, 30
Fuel Pump Relay	8W-12-17
Fuse 2 (PDC)	8W-12-16
Fuse 3 (PDC)	8W-12-10, 18
Fuse 12 (PDC)	8W-12-19, 30
Fuse 15 (PDC)	8W-12-11, 14
Fuse 3 (JB)	8W-12-10
Fuse 4 (JB)	8W-12-10
Fuse 5 (JB)	8W-12-11
Fuse 6 (JB)	8W-12-12
Fuse 7 (JB)	8W-12-14
Fuse 8 (JB)	8W-12-15
Fuse 9 (JB)	8W-12-11
Fuse 11 (JB)	8W-12-16
Fuse 12 (JB)	8W-12-17
Fuse 14 (JB)	8W-12-18
Fuse 15 (JB)	8W-12-18
Fuse 16 (JB)	8W-12-10
Fuse 17 (JB)	8W-12-10
Fuse 18 (JB)	8W-12-19, 30
Fuse 19 (JB)	8W-12-19
Fuse 20 (JB)	8W-12-20
Fuse 21 (JB)	8W-12-17
Fuse 22 (JB)	8W-12-21
Fuse 23 (JB)	8W-12-22
Fuse 24 (JB)	8W-12-22
Fuse 25 (JB)	8W-12-23
Fuse 26 (JB)	8W-12-16
Fuse 28 (JB)	8W-12-24
Fuse 29 (JB)	8W-12-24
Fuse 30 (JB)	8W-12-24
Fuse 31 (JB)	8W-12-24
Fuse 32 (JB)	8W-12-23
Fuse 33 (JB)	8W-12-23
G200	8W-12-31
Glove Box Lamp	8W-12-15
High Beam Relay	8W-12-6, 10
Horn Relay	8W-12-28
Horn Switch	8W-12-28
Instrument Cluster	8W-12-10, 21, 28, 29
Junction Block	8W-12-2, 3, 9, 10, 11, 12, 14, 15, 16, 17, 18, 19, 20, 21, 22, 23, 24, 25, 26, 27, 28, 29, 30, 31
Left Courtesy Lamp	8W-12-15
Left Door Handle Courtesy Lamp	8W-12-15, 19, 27
Left Fog Lamp	8W-12-22
Left Front Park Lamp	8W-12-13
Left Front Park/Turn Signal Lamp	8W-12-13, 29
Left Front Side Marker Lamp	8W-12-13, 29
Left High Beam Headlamp	8W-12-10
Left Liftgate Ajar Switch	8W-12-27
Left Low Beam Headlamp	8W-12-18
Left Multi-Function Switch	8W-12-10, 31
Left Rear Door Power Lock Motor/Ajar Switch	8W-12-25
Left Rear Lamp Assembly	8W-12-12, 25
Left Visor/Vanity Lamp	8W-12-15, 27
License Lamp No. 1	8W-12-12
License Lamp No. 2	8W-12-12
Liftgate Flip-Up Ajar Switch	8W-12-27
Liftgate Flip-Up Push Button Switch	8W-12-15
Liftgate Power Lock Motor	8W-12-15
Low Beam Relay	8W-12-7, 18
Low Beam/Daytime Running Lamp Relay	8W-12-7, 18
Manual Temperature Control	8W-12-16, 20
Overhead Map/Courtesy Lamp	8W-12-15, 19, 27
Park Lamp Relay	8W-12-7, 12
Park/Neutral Position Switch	8W-12-20
Passenger Door Module	8W-12-30
Passenger Heated Seat Switch	8W-12-20
Passenger Lumbar Switch	8W-12-9
Passenger Power Seat Switch	8W-12-9
Power Amplifier	8W-12-11
Power Connector	8W-12-11
Power Distribution Center	8W-12-10, 11, 14, 16, 18, 19, 30
Powertrain Control Module	8W-12-17, 28
Radio	8W-12-11, 24
Rear Power Outlet	8W-12-11
Rear Window Defogger	8W-12-16
Rear Window Defogger Relay	8W-12-8, 16
Rear Wiper Motor	8W-12-15, 27
Right Courtesy Lamp	8W-12-15
Right Door Handle Courtesy Lamp	8W-12-15, 19, 27
Right Fog Lamp	8W-12-22
Right Front Park Lamp	8W-12-13
Right Front Park/Turn Signal Lamp	8W-12-13, 29
Right Front Side Marker Lamp	8W-12-13, 29
Right High Beam Headlamp	8W-12-10
Right Liftgate Ajar Switch	8W-12-27
Right Low Beam Headlamp	8W-12-18
Right Multi-Function Switch	8W-12-24
Right Rear Lamp Assembly	8W-12-12, 29
Right Visor/Vanity Lamp	8W-12-15, 27
Seat Belt Switch	8W-12-27
Seat Module	8W-12-9
Sentry Key Immobilizer Module	8W-12-14, 21
Sunroof Control Module	8W-12-23
Sunroof Delay Relay	8W-12-8, 23
Temperature Valve Actuator	8W-12-20
Trailer Tow Brake Lamp Relay	8W-12-19
Trailer Tow Circuit Breaker	8W-12-16
Trailer Tow Connector	8W-12-12
Trailer Tow Left Turn Relay	8W-12-25
Trailer Tow Right Turn Relay	8W-12-29
Transmission Control Module	8W-12-17, 24, 28
Transmission Solenoid/TRS Assembly	8W-12-20
Underhood Lamp	8W-12-14
Vehicle Information Center	8W-12-15, 21
Wiper High/Low Relay	8W-12-26
Wiper On/Off Relay	8W-12-26, 30

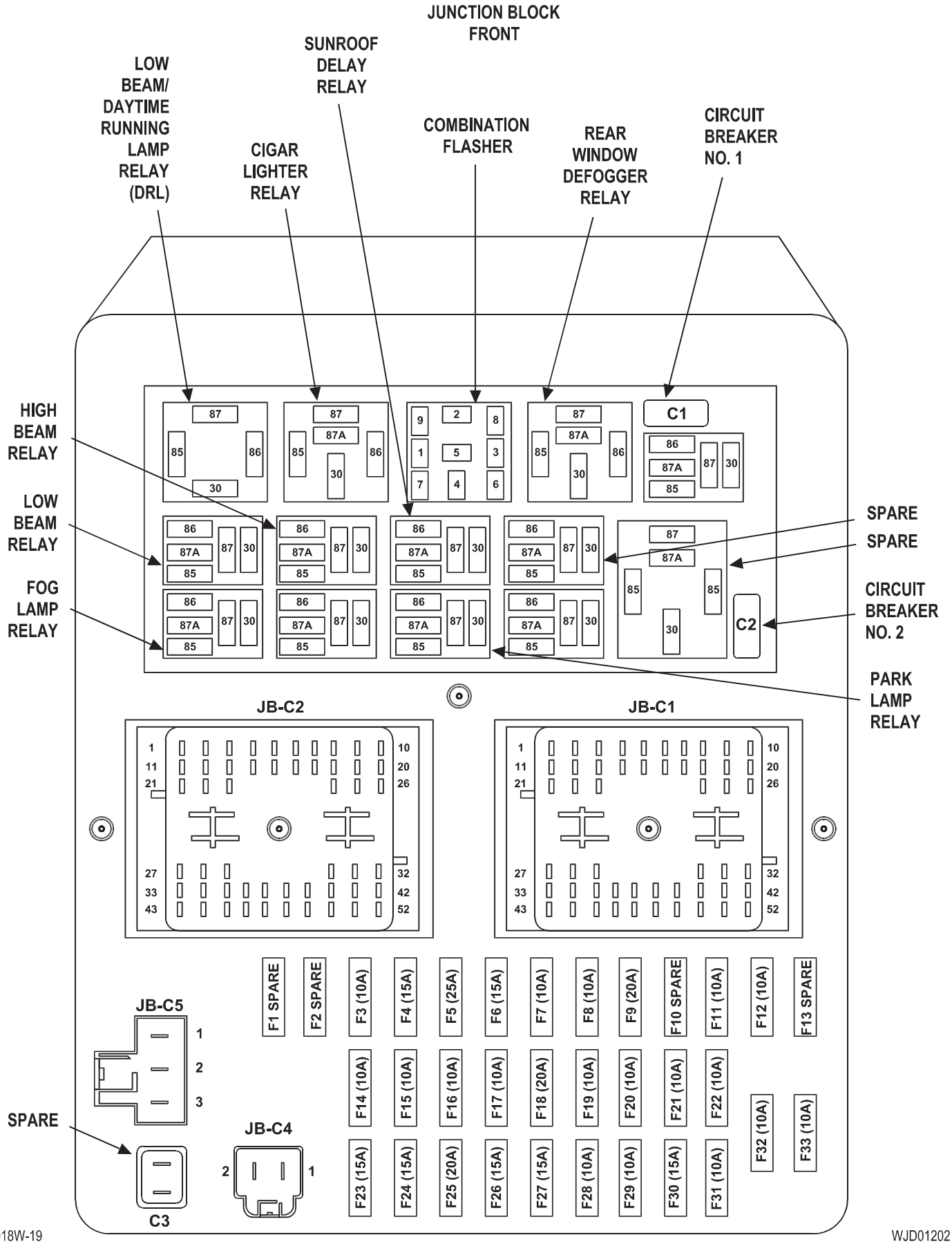

J018W-19 WJD01202

JUNCTION BLOCK
BACK

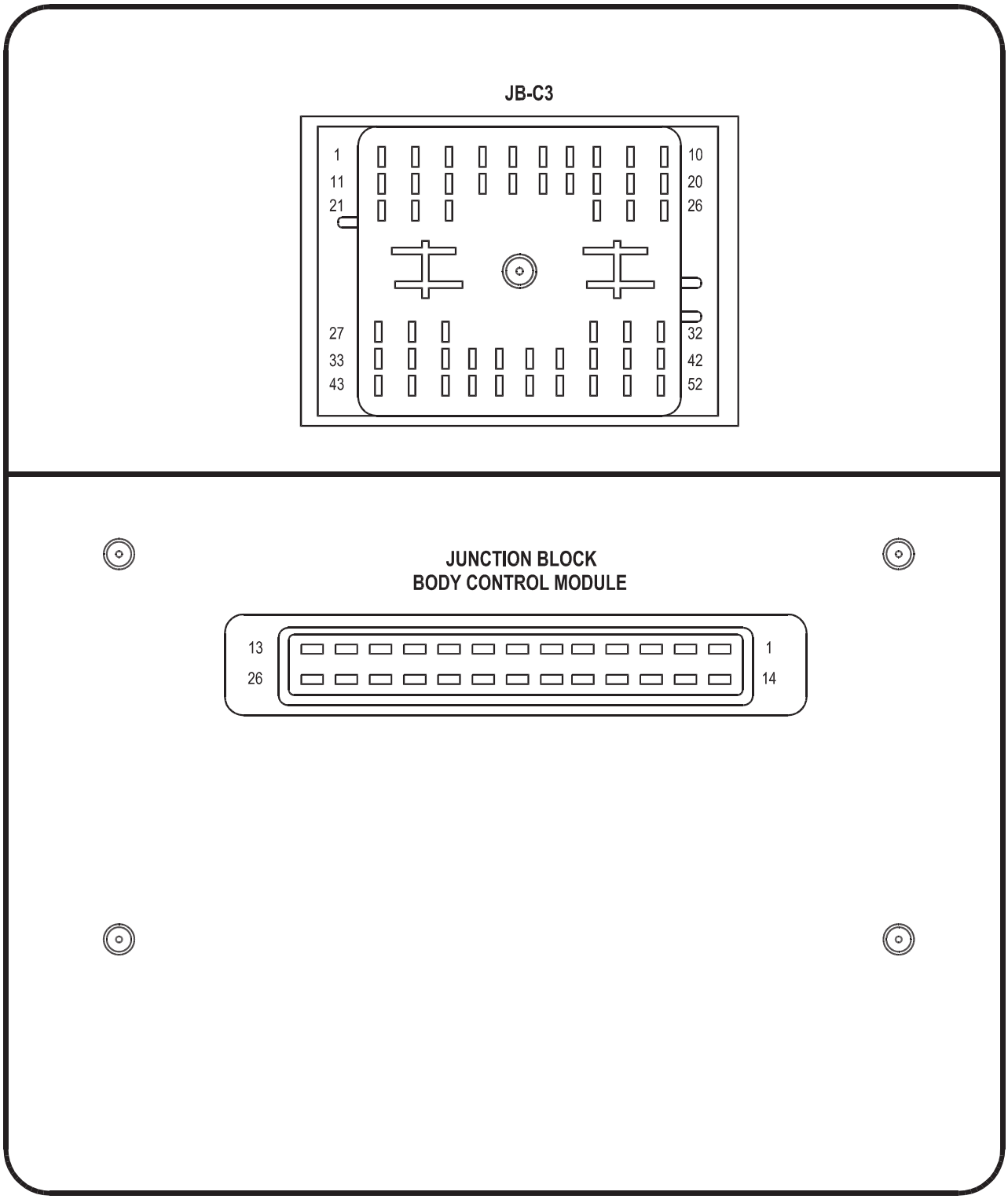

FUSES

FUSE	AMPS	FUSED CIRCUIT	FUNCTION
1	-	-	-
2	-	-	-
3	10A	L33 18RD	FUSED HIGH BEAM RELAY OUTPUT
4	15A	INTERNAL	FUSED B(+)
5	25A	INTERNAL	FUSED B(+)
6	15A	INTERNAL	FUSED B(+)
7	10A	INTERNAL	FUSED B(+)
8	15A	INTERNAL	FUSED B(+)
9	20A	INTERNAL	FUSED B(+)
10	-	-	-
11	10A	C15 20BK/WT	FUSED REAR WINDOW DEFOGGER RELAY OUTPUT
12	10A	F991 20OR/DB	FUSED IGNITION SWITCH OUTPUT (RUN-START)
13	-	-	-
14	10A	L43 18VT	FUSED LOW BEAM RELAY OUTPUT
15	10A	L44 18VT/RD	FUSED LOW BEAM RELAY OUTPUT
16	10A	L34 18RD/OR	FUSED HIGH BEAM RELAY OUTPUT
17	10A	INTERNAL	FUSED B(+)
18	20A	L50 14WT/TN	FUSED B(+)
19	10A	F20 18DB/PK	FUSED IGNITION SWITCH OUTPUT (RUN)
20	10A	INTERNAL	FUSED IGNITION SWITCH OUTPUT (RUN)
21	10A	INTERNAL	FUSED IGNITION SWITCH OUTPUT (RUN-START)
22	10A	INTERNAL	FUSED IGNITION SWITCH OUTPUT (RUN-START)
23	15A	F32 20PK/DB	FUSED B(+)
24	15A	INTERNAL	FUSED B(+)
25	20A	INTERNAL	FUSED B(+)
26	15A	F30 18RD	FUSED CIGAR LIGHTER RELAY OUTPUT
27	-	-	-
28	10A	INTERNAL	FUSED IGNITION SWITCH OUTPUT (RUN-ACC)
29	10A	INTERNAL	FUSED IGNITION SWITCH OUTPUT (RUN-ACC)
30	15A	X12 16WT/RD	FUSED IGNITION SWITCH OUTPUT (RUN-ACC)
31	10A	F45 20YL/RD	FUSED IGNITION SWITCH OUTPUT (START)
32	10A	F14 18LG/YL	FUSED IGNITION SWITCH OUTPUT (RUN-START)
33	10A	F23 18DB/YL	FUSED IGNITION SWITCH OUTPUT (RUN)

CIRCUIT BREAKERS

C.B.	AMPS	FUSED CIRCUIT	FUNCTION
1	20A	V6 16DB	FUSED IGNITION SWITCH OUTPUT (RUN-ACC)
2	20A	INTERNAL	FUSED B(+)
3	-	-	-

JUNCTION BLOCK
BODY CONTROL MODULE

CAVITY	CIRCUIT	FUNCTION
1	L308	PARK LAMP RELAY CONTROL
2	L26	FOG LAMP RELAY CONTROL
3	Q29	SUNROOF DELAY RELAY CONTROL
4	L307	LOW BEAM RELAY CONTROL
5	G5	FUSED IGNITION SWITCH OUTPUT (RUN-START)
6	X4	HORN RELAY CONTROL
7	-	-
8	G80	LIFTGATE FLIP-UP AJAR SWITCH SENSE
9	L11	HIGH BEAM RELAY CONTROL
10	L91	HAZARD SWITCH SENSE
11	C80	REAR WINDOW DEFOGGER RELAY CONTROL
12	Z2	GROUND
13	-	-
14	L7	PARK LAMP RELAY OUTPUT
15	Z1	GROUND
16	M2	COURTESY LAMPS DRIVER
17	-	-
18	-	-
19	M20	COURTESY LAMPS DRIVER
20	V55	WIPER PARK SWITCH SENSE
21	G78	LIFTGATE AJAR SWITCH SENSE
22	G10	SEAT BELT SWITCH SENSE
23	G77	LEFT REAR DOOR AJAR SWITCH SENSE
24	G73	LIFTGATE COURTESY DISABLE
25	V23	FUSED IGNITION SWITCH OUTPUT (RUN-ACC)
26	M1	FUSED B(+)

CIGAR LIGHTER RELAY

CAVITY	CIRCUIT	FUNCTION
30	INTERNAL	FUSED B(+)
85	INTERNAL	FUSED IGNITION SWITCH OUTPUT (RUN-ACC)
86	INTERNAL	GROUND
87	INTERNAL	CIGAR LIGHTER RELAY OUTPUT
87A	-	-

FOG LAMP RELAY

CAVITY	CIRCUIT	FUNCTION
30	INTERNAL	FUSED B(+)
85	INTERNAL	FOG LAMP RELAY CONTROL
86	INTERNAL	FUSED B(+)
87	INTERNAL	FOG LAMP RELAY OUTPUT
87A	-	-

HIGH BEAM RELAY

CAVITY	CIRCUIT	FUNCTION
30	INTERNAL	FUSED B(+)
85	INTERNAL	HIGH BEAM RELAY CONTROL
86	INTERNAL	FUSED B(+)
87	INTERNAL	HIGH BEAM RELAY OUTPUT
87A	-	-

LOW BEAM/ DAYTIME RUNNING LAMP RELAY (DRL)

CAVITY	CIRCUIT	FUNCTION
30	INTERNAL	FUSED B(+)
85	INTERNAL	GROUND
86	INTERNAL	RELAY CONTROL
87	INTERNAL	RELAY OUTPUT
87A	-	-

LOW BEAM RELAY

CAVITY	CIRCUIT	FUNCTION
30	INTERNAL	FUSED B(+)
85	INTERNAL	FUSED B(+)
86	INTERNAL	LOW BEAM RELAY CONTROL
87	INTERNAL	LOW BEAM RELAY OUTPUT
87A	-	-

PARK LAMP RELAY

CAVITY	CIRCUIT	FUNCTION
30	INTERNAL	PARK LAMP RELAY OUTPUT
85	INTERNAL	FUSED B(+)
86	INTERNAL	PARK LAMP RELAY CONTROL
87	INTERNAL	FUSED B(+)
87A	INTERNAL	GROUND

REAR WINDOW DEFOGGER RELAY

CAVITY	CIRCUIT	FUNCTION
30	INTERNAL	FUSED B(+)
85	INTERNAL	FUSED B(+)
86	INTERNAL	REAR WINDOW DEFOGGER RELAY CONTROL
87	INTERNAL	REAR WINDOW DEFOGGER RELAY OUTPUT
87A	-	-

SUNROOF DELAY RELAY

CAVITY	CIRCUIT	FUNCTION
30	INTERNAL	FUSED B(+)
85	INTERNAL	FUSED B(+)
86	INTERNAL	SUNROOF DELAY RELAY CONTROL
87	Q30 16TN	SUNROOF DELAY RELAY OUTPUT
87A	-	-

COMBINATION FLASHER

CAVITY	CIRCUIT	FUNCTION
1	INTERNAL	FUSED B(+)
2	INTERNAL	LEFT TURN SIGNAL
3	INTERNAL	RIGHT TURN SIGNAL
4	L63 18DG/RD	LEFT TURN SIGNAL
5	L62 18BR/RD	RIGHT TURN SIGNAL
6	INTERNAL	FUSED IGNITION SWITCH OUTPUT (RUN)
7	L305 20LB/WT	LEFT TURN SWITCH SENSE
8	L302 20LB/YL	RIGHT TURN SWITCH SENSE
9	INTERNAL	HAZARD SWITCH SENSE

POWER SEATS

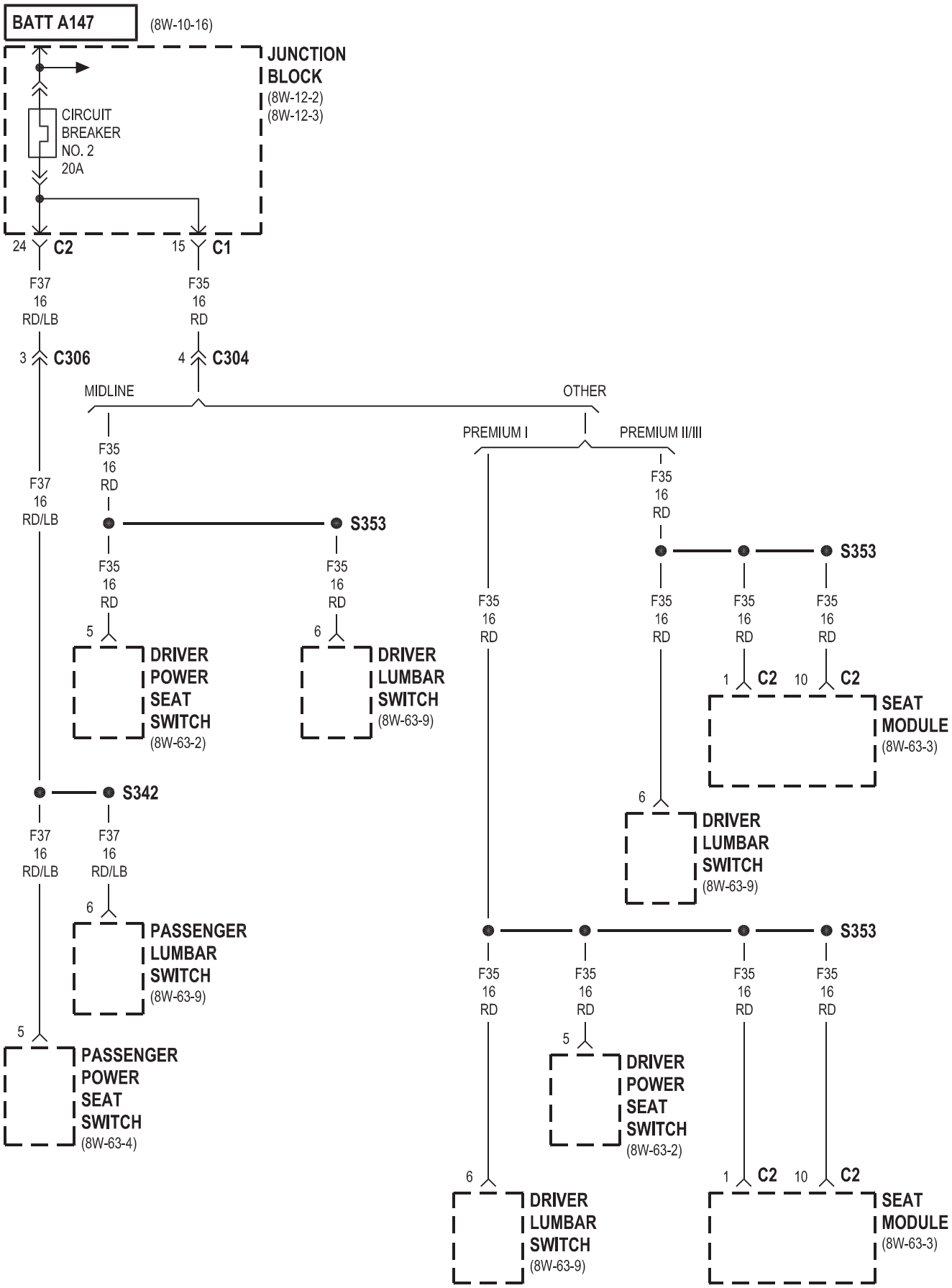
BATT A147
(8W-10-16)
JUNCTION BLOCK
(8W-12-2)
(8W-12-3)
CIRCUIT BREAKER NO. 2 20A
24 C2
15 C1
F37 16 RD/LB
F35 16 RD
3 C306
4 C304
MIDLINE
OTHER
PREMIUM I
PREMIUM II/III
F35 16 RD
F37 16 RD/LB
S353
5
DRIVER POWER SEAT SWITCH
(8W-63-2)
6
DRIVER LUMBAR SWITCH
(8W-63-9)
1 C2
10 C2
SEAT MODULE
(8W-63-3)
S342
F37 16 RD/LB
6
PASSENGER LUMBAR SWITCH
(8W-63-9)
5
PASSENGER POWER SEAT SWITCH
(8W-63-4)

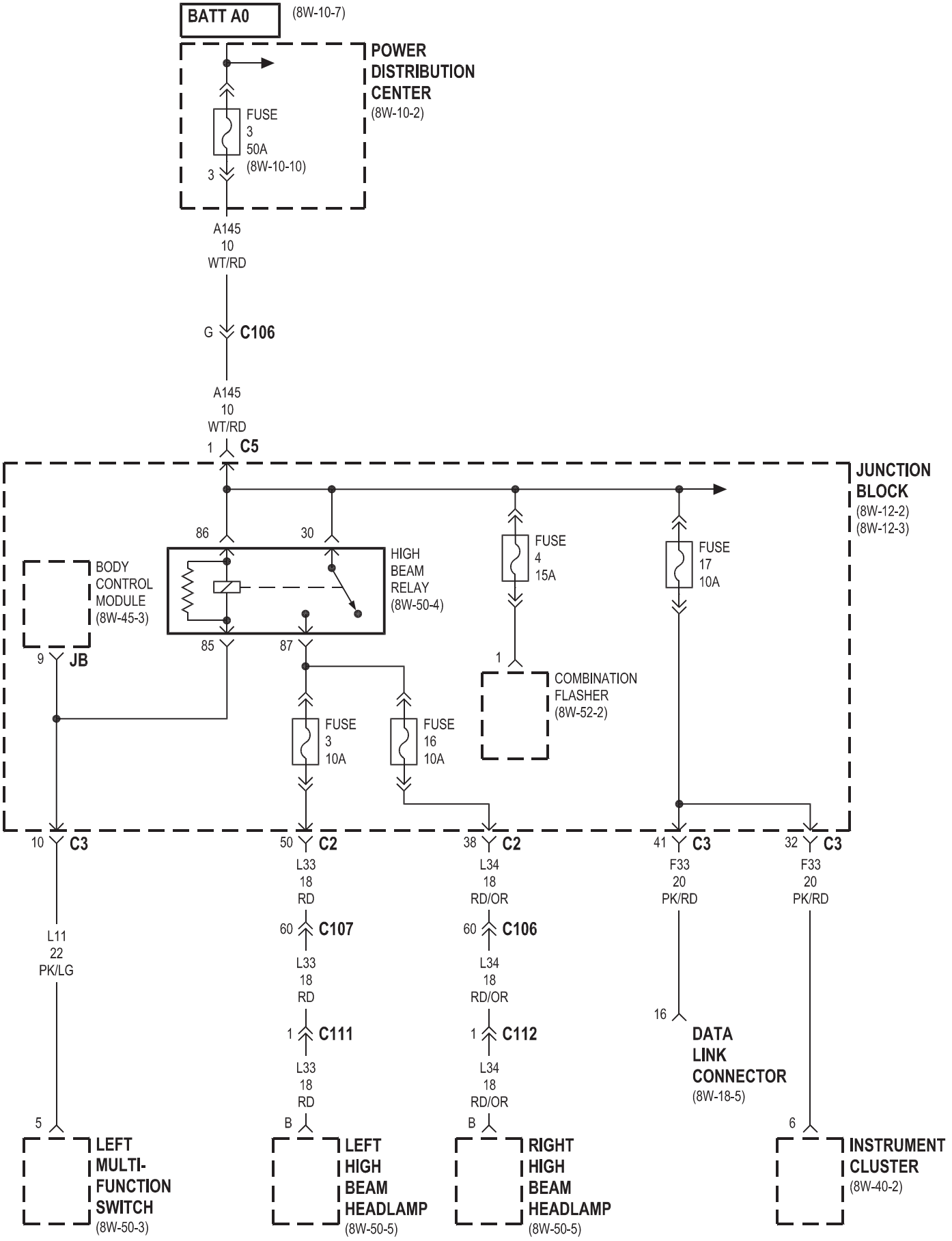
BATT A0
(8W-10-7)
POWER DISTRIBUTION CENTER
(8W-10-2)
FUSE 3 50A
(8W-10-10)
3
A145 10 WT/RD
G
C106
A145 10 WT/RD
1
C5
JUNCTION BLOCK
(8W-12-2)
(8W-12-3)
86
30
HIGH BEAM RELAY
(8W-50-4)
85
87
BODY CONTROL MODULE
(8W-45-3)
9
JB
FUSE 4 15A
FUSE 17 10A
1
COMBINATION FLASHER
(8W-52-2)
FUSE 3 10A
FUSE 16 10A
10
C3
50
C2
38
C2
41
C3
32
C3
L33 18 RD
L34 18 RD/OR
F33 20 PK/RD
F33 20 PK/RD
60
C107
60
C106
L33 18 RD
L34 18 RD/OR
L11 22 PK/LG
1
C111
1
C112
16
DATA LINK CONNECTOR
(8W-18-5)
L33 18 RD
L34 18 RD/OR
5
B
B
6
LEFT MULTI-FUNCTION SWITCH
(8W-50-3)
LEFT HIGH BEAM HEADLAMP
(8W-50-5)
RIGHT HIGH BEAM HEADLAMP
(8W-50-5)
INSTRUMENT CLUSTER
(8W-40-2)

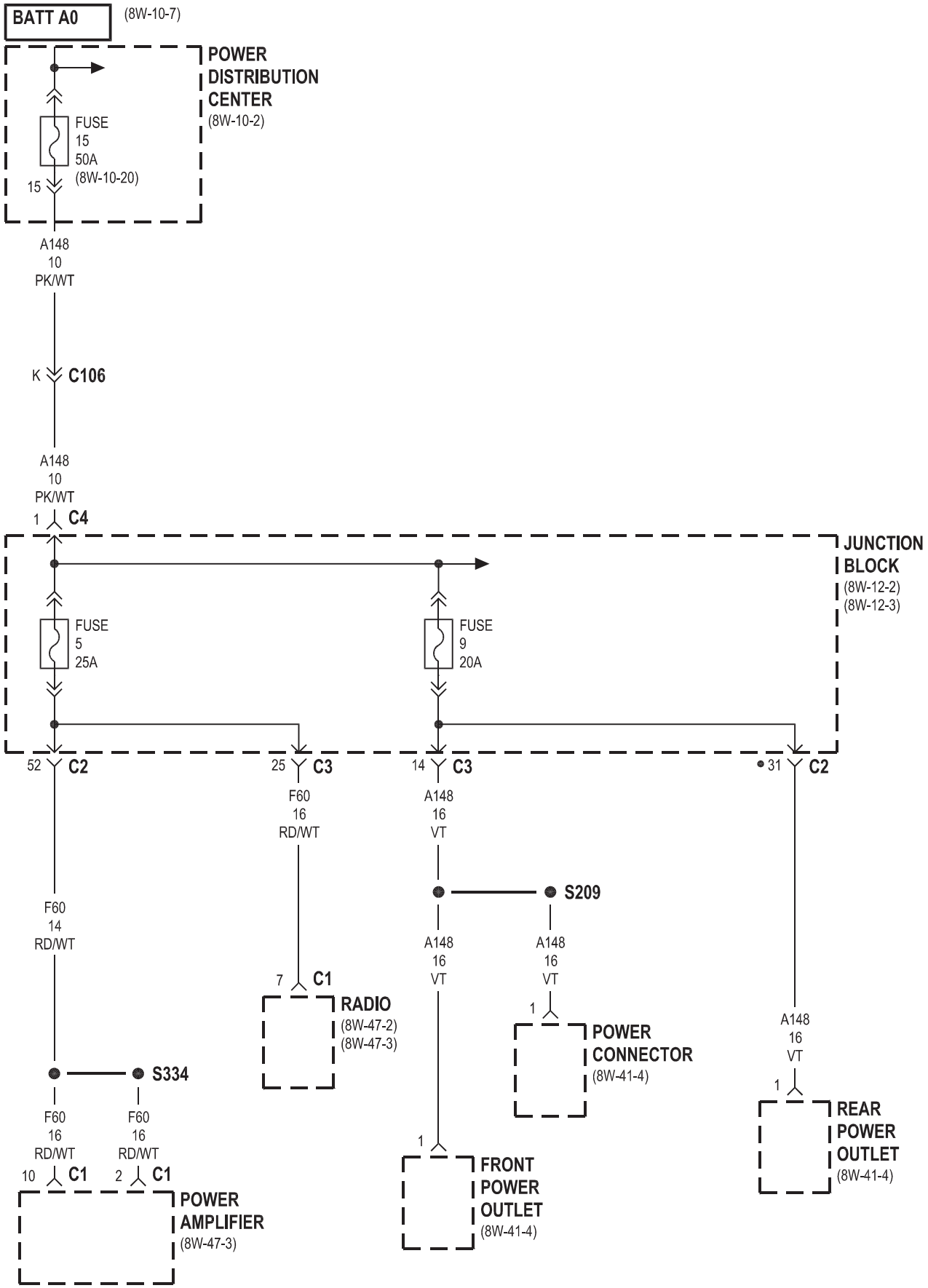
BATT A0
(8W-10-7)
POWER DISTRIBUTION CENTER
(8W-10-2)
FUSE 15 50A
(8W-10-20)
15
A148 10 PK/WT
K
C106
A148 10 PK/WT
1
C4
JUNCTION BLOCK
(8W-12-2)
(8W-12-3)
FUSE 5 25A
FUSE 9 20A
52
C2
25
C3
14
C3
31
C2
F60 16 RD/WT
A148 16 VT
S209
F60 14 RD/WT
A148 16 VT
A148 16 VT
7
C1
RADIO
(8W-47-2)
(8W-47-3)
1
POWER CONNECTOR
(8W-41-4)
A148 16 VT
1
REAR POWER OUTLET
(8W-41-4)
S334
F60 16 RD/WT
F60 16 RD/WT
10
C1
2
C1
POWER AMPLIFIER
(8W-47-3)
1
FRONT POWER OUTLET
(8W-41-4)
POWER SEATS

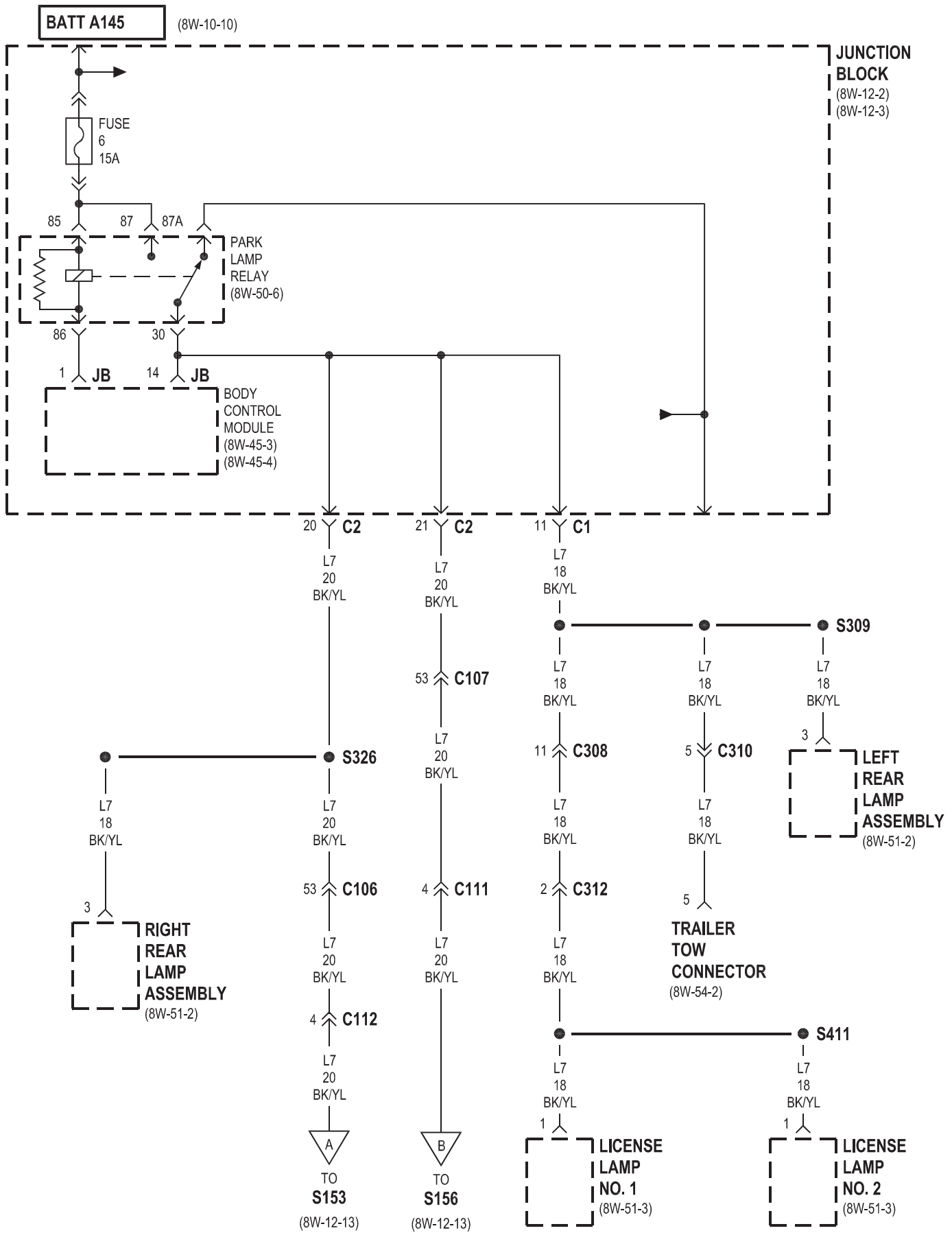
BATT A145
(8W-10-10)
JUNCTION BLOCK
(8W-12-2)
(8W-12-3)
FUSE
6
15A
85
87
87A
PARK LAMP RELAY
(8W-50-6)
86
30
1 JB
14 JB
BODY CONTROL MODULE
(8W-45-3)
(8W-45-4)
20 C2
21 C2
11 C1
L7 20 BK/YL
L7 18 BK/YL
S309
53 C107
11 C308
5 C310
3
LEFT REAR LAMP ASSEMBLY
(8W-51-2)
S326
53 C106
4 C111
2 C312
5
TRAILER TOW CONNECTOR
(8W-54-2)
RIGHT REAR LAMP ASSEMBLY
(8W-51-2)
4 C112
S411
1
LICENSE LAMP NO. 1
(8W-51-3)
LICENSE LAMP NO. 2
(8W-51-3)
A
B
TO S153
(8W-12-13)
TO S156
(8W-12-13)

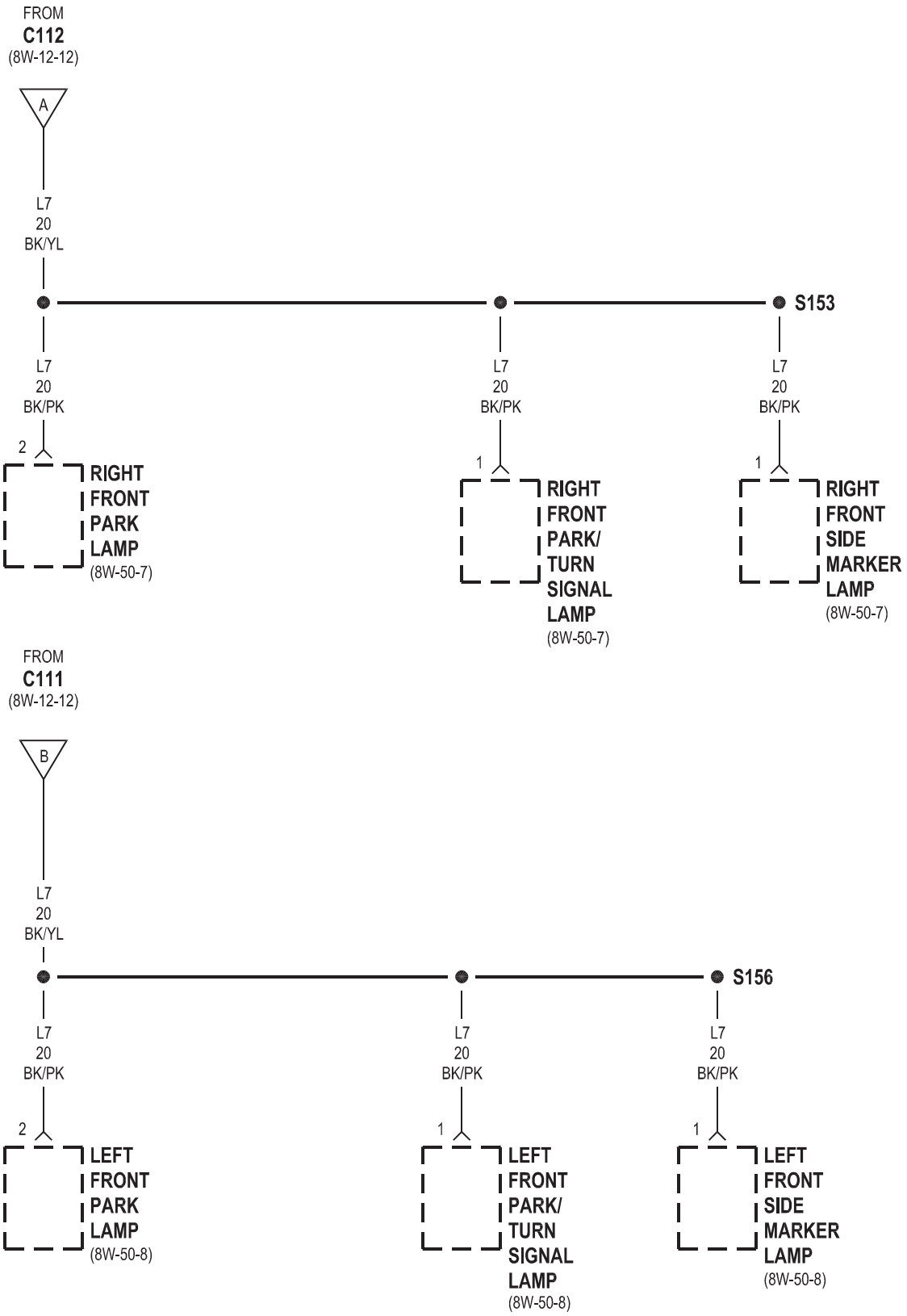
FROM
C112
(8W-12-12)
A
L7
20
BK/YL
S153
L7
20
BK/PK
2
RIGHT
FRONT
PARK
LAMP
(8W-50-7)
L7
20
BK/PK
1
RIGHT
FRONT
PARK/
TURN
SIGNAL
LAMP
(8W-50-7)
L7
20
BK/PK
1
RIGHT
FRONT
SIDE
MARKER
LAMP
(8W-50-7)
FROM
C111
(8W-12-12)
B
L7
20
BK/YL
S156
L7
20
BK/PK
2
LEFT
FRONT
PARK
LAMP
(8W-50-8)
L7
20
BK/PK
1
LEFT
FRONT
PARK/
TURN
SIGNAL
LAMP
(8W-50-8)
L7
20
BK/PK
1
LEFT
FRONT
SIDE
MARKER
LAMP
(8W-50-8)

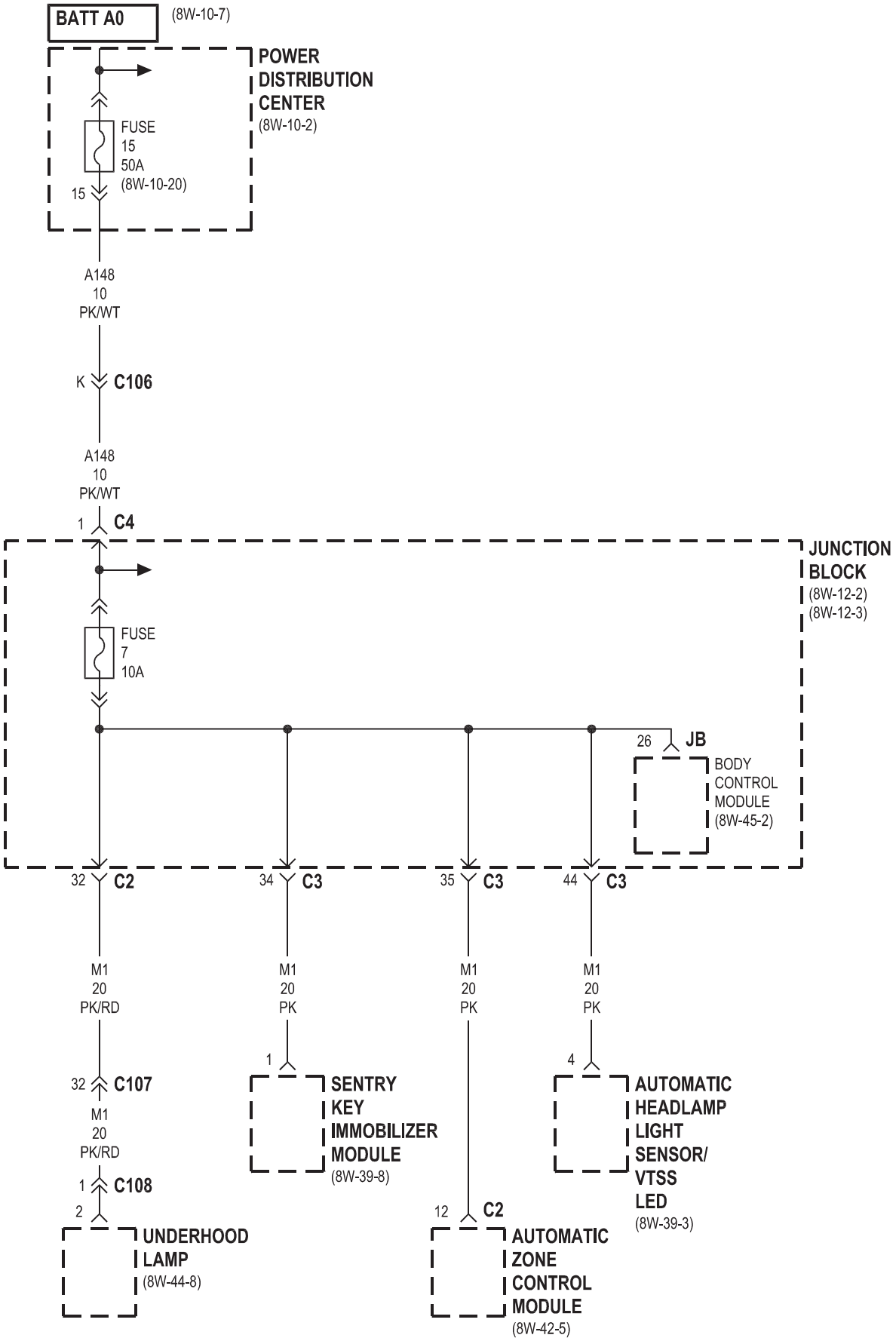
BATT A0
(8W-10-7)
POWER DISTRIBUTION CENTER
(8W-10-2)
FUSE 15 50A
(8W-10-20)
15
A148 10 PK/WT
K
C106
A148 10 PK/WT
1
C4
JUNCTION BLOCK
(8W-12-2)
(8W-12-3)
FUSE 7 10A
26
JB
BODY CONTROL MODULE
(8W-45-2)
32
C2
34
C3
35
C3
44
C3
M1 20 PK/RD
M1 20 PK
M1 20 PK
M1 20 PK
32
C107
M1 20 PK/RD
1
C108
2
UNDERHOOD LAMP
(8W-44-8)
1
SENTRY KEY IMMOBILIZER MODULE
(8W-39-8)
12
C2
AUTOMATIC ZONE CONTROL MODULE
(8W-42-5)
4
AUTOMATIC HEADLAMP LIGHT SENSOR/ VTSS LED
(8W-39-3)

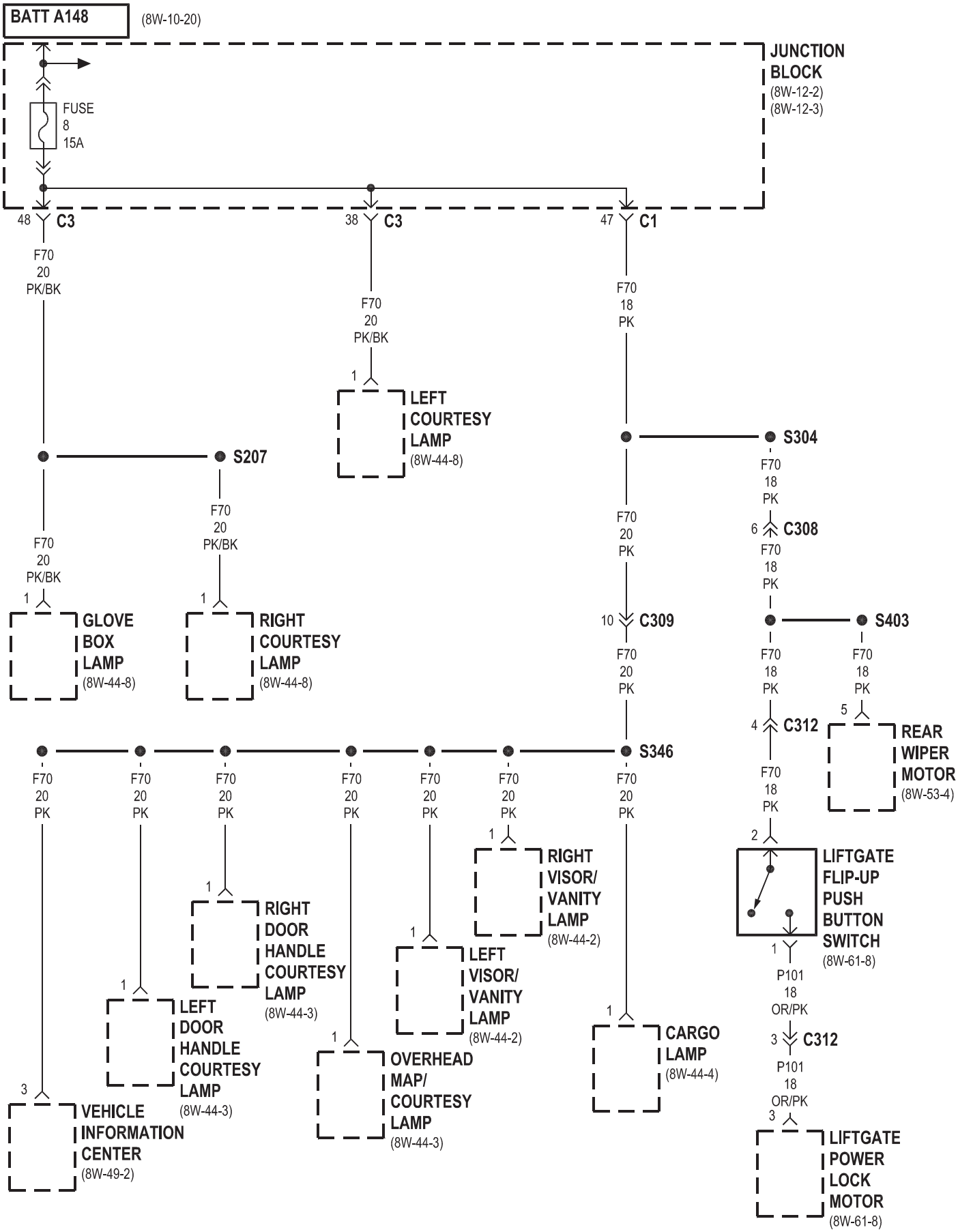
BATT A148
(8W-10-20)
JUNCTION BLOCK
(8W-12-2)
(8W-12-3)
FUSE 8 15A
48 C3
38 C3
47 C1
F70 20 PK/BK
F70 20 PK/BK
F70 18 PK
LEFT COURTESY LAMP
(8W-44-8)
S207
S304
F70 20 PK/BK
F70 20 PK/BK
F70 18 PK
6 C308
F70 18 PK
F70 20 PK
GLOVE BOX LAMP
(8W-44-8)
RIGHT COURTESY LAMP
(8W-44-8)
10 C309
S403
F70 20 PK
F70 18 PK
F70 18 PK
4 C312
5
REAR WIPER MOTOR
(8W-53-4)
S346
F70 20 PK
F70 18 PK
2
LIFTGATE FLIP-UP PUSH BUTTON SWITCH
(8W-61-8)
RIGHT VISOR/ VANITY LAMP
(8W-44-2)
RIGHT DOOR HANDLE COURTESY LAMP
(8W-44-3)
LEFT VISOR/ VANITY LAMP
(8W-44-2)
P101 18 OR/PK
LEFT DOOR HANDLE COURTESY LAMP
(8W-44-3)
CARGO LAMP
(8W-44-4)
3 C312
P101 18 OR/PK
OVERHEAD MAP/ COURTESY LAMP
(8W-44-3)
VEHICLE INFORMATION CENTER
(8W-49-2)
LIFTGATE POWER LOCK MOTOR
(8W-61-8)

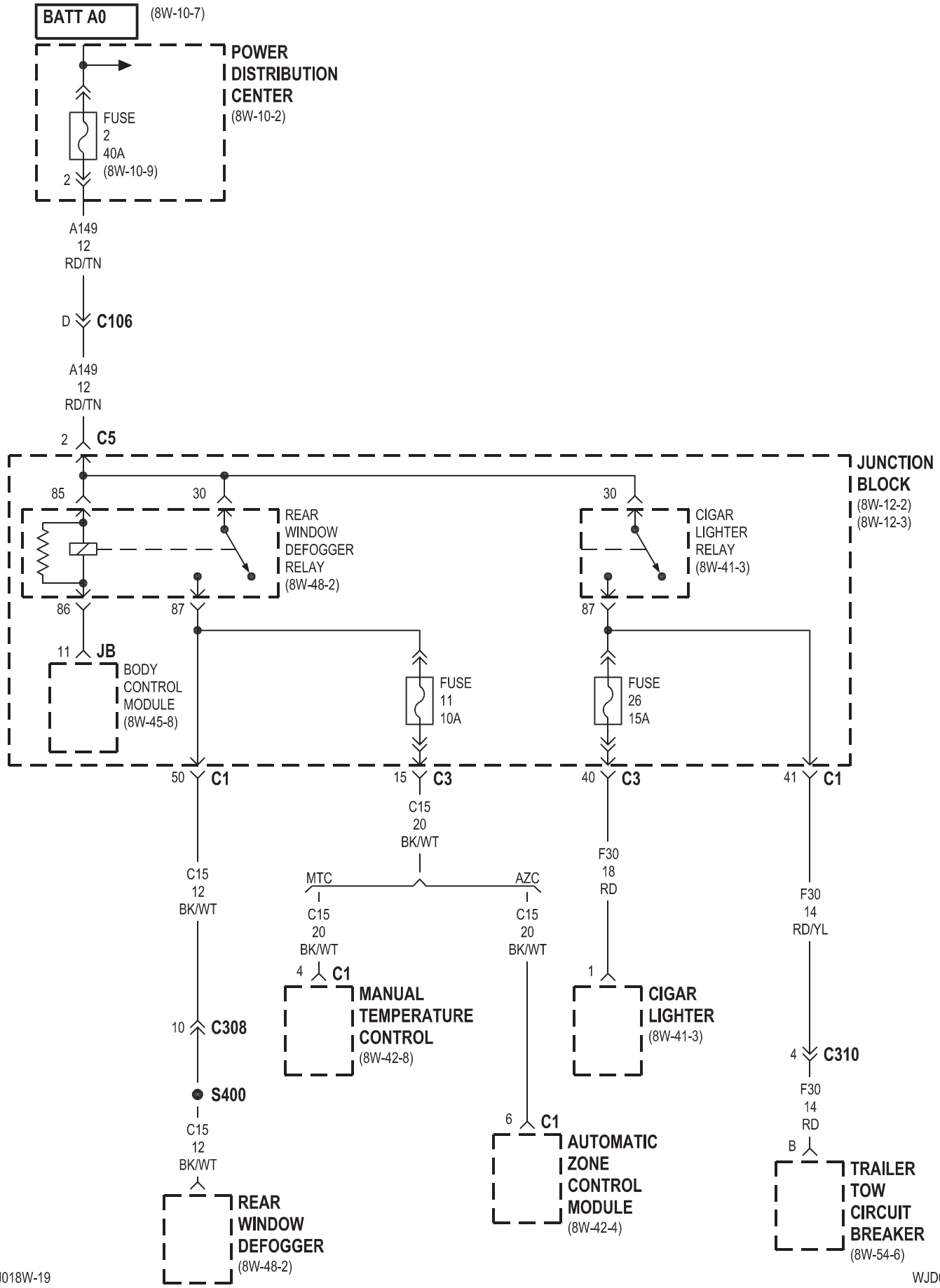
BATT A0
(8W-10-7)
POWER DISTRIBUTION CENTER
(8W-10-2)
FUSE 2 40A
(8W-10-9)
2
A149 12 RD/TN
D
C106
A149 12 RD/TN
2
C5
JUNCTION BLOCK
(8W-12-2)
(8W-12-3)
85
30
30
REAR WINDOW DEFOGGER RELAY
(8W-48-2)
CIGAR LIGHTER RELAY
(8W-41-3)
86
87
87
11
JB
BODY CONTROL MODULE
(8W-45-8)
FUSE 11 10A
FUSE 26 15A
50
C1
15
C3
40
C3
41
C1
C15 20 BK/WT
MTC
AZC
C15 20 BK/WT
C15 20 BK/WT
F30 18 RD
F30 14 RD/YL
C15 12 BK/WT
4
C1
MANUAL TEMPERATURE CONTROL
(8W-42-8)
1
CIGAR LIGHTER
(8W-41-3)
10
C308
4
C310
S400
F30 14 RD
C15 12 BK/WT
6
C1
AUTOMATIC ZONE CONTROL MODULE
(8W-42-4)
B
TRAILER TOW CIRCUIT BREAKER
(8W-54-6)
REAR WINDOW DEFOGGER
(8W-48-2)

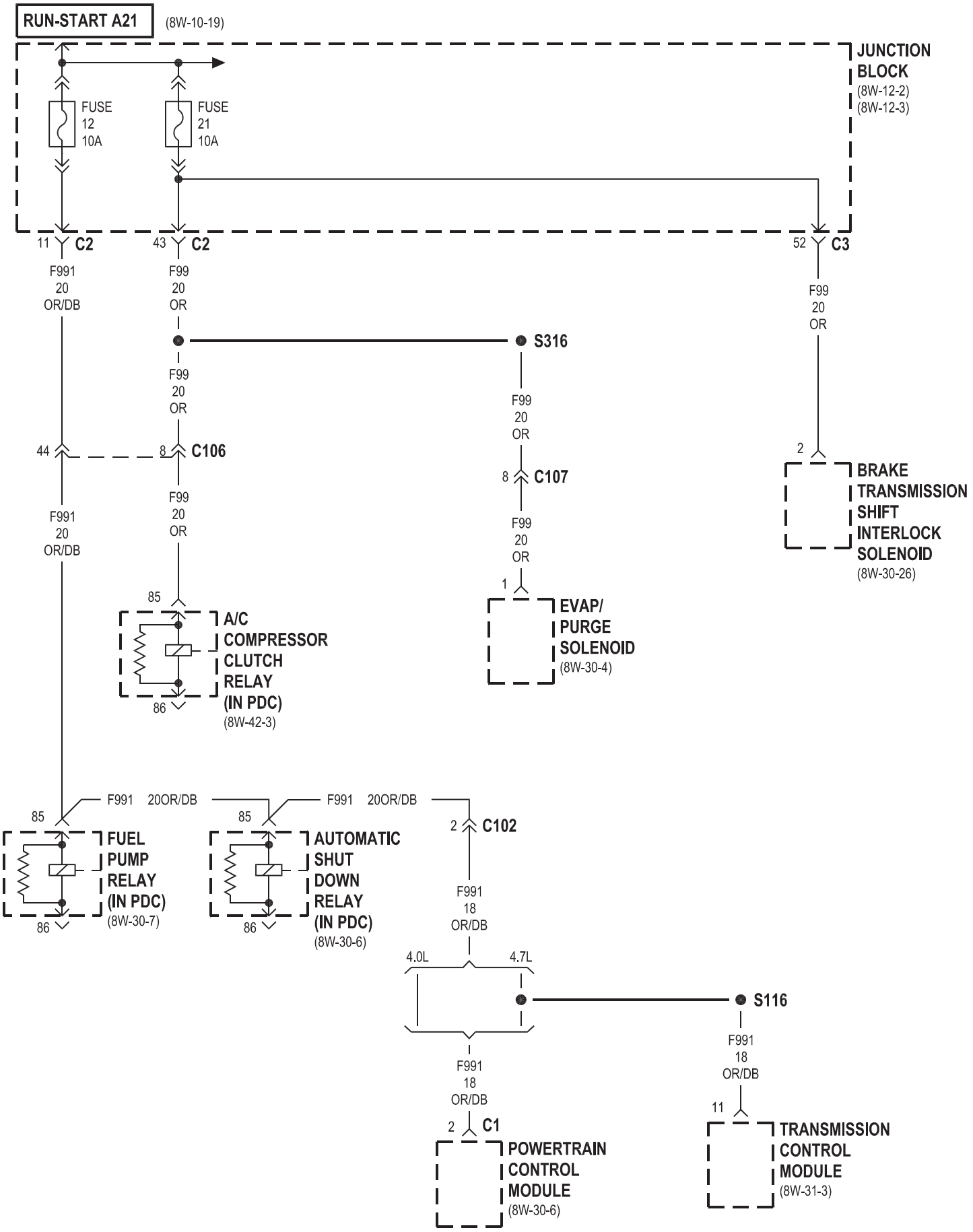
RUN-START A21
(8W-10-19)
JUNCTION BLOCK
(8W-12-2)
(8W-12-3)
FUSE 12 10A
FUSE 21 10A
11 C2
43 C2
52 C3
F991 20 OR/DB
F99 20 OR
S316
44
8 C106
8 C107
2
BRAKE TRANSMISSION SHIFT INTERLOCK SOLENOID
(8W-30-26)
1
EVAP/ PURGE SOLENOID
(8W-30-4)
85
86
A/C COMPRESSOR CLUTCH RELAY (IN PDC)
(8W-42-3)
F991 20OR/DB
FUEL PUMP RELAY (IN PDC)
(8W-30-7)
AUTOMATIC SHUT DOWN RELAY (IN PDC)
(8W-30-6)
2 C102
F991 18 OR/DB
4.0L
4.7L
S116
2 C1
POWERTRAIN CONTROL MODULE
(8W-30-6)
11
TRANSMISSION CONTROL MODULE
(8W-31-3)

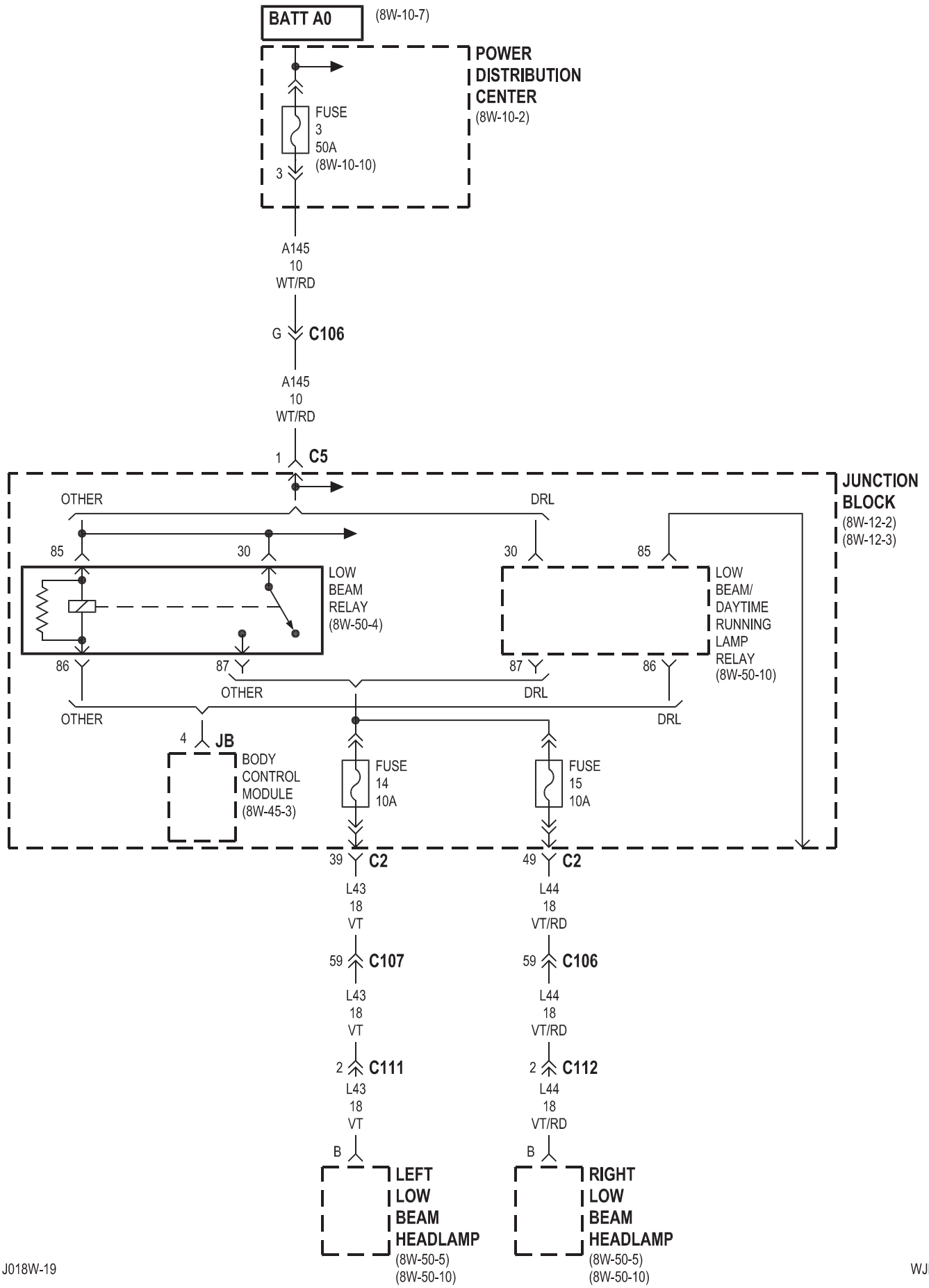
BATT A0
(8W-10-7)
POWER DISTRIBUTION CENTER
(8W-10-2)
FUSE
3
50A
(8W-10-10)
3
A145
10
WT/RD
G
C106
A145
10
WT/RD
1
C5
JUNCTION BLOCK
(8W-12-2)
(8W-12-3)
OTHER
DRL
85
30
30
85
LOW BEAM RELAY
(8W-50-4)
LOW BEAM/ DAYTIME RUNNING LAMP RELAY
(8W-50-10)
86
87
87
86
OTHER
DRL
OTHER
DRL
4
JB
BODY CONTROL MODULE
(8W-45-3)
FUSE
14
10A
FUSE
15
10A
39
C2
49
C2
L43
18
VT
L44
18
VT/RD
59
C107
59
C106
L43
18
VT
L44
18
VT/RD
2
C111
2
C112
L43
18
VT
L44
18
VT/RD
B
B
LEFT LOW BEAM HEADLAMP
(8W-50-5)
(8W-50-10)
RIGHT LOW BEAM HEADLAMP
(8W-50-5)
(8W-50-10)

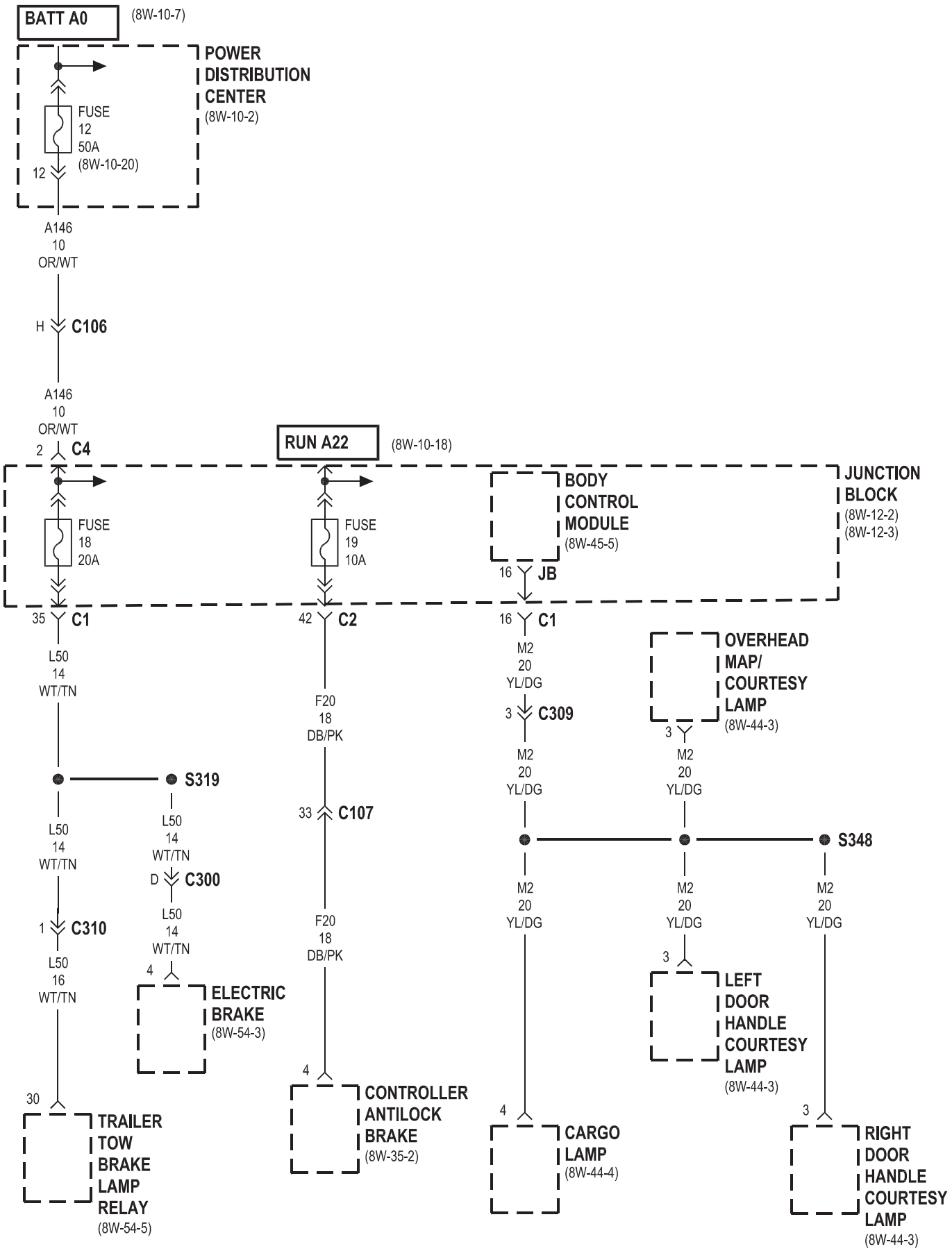
BATT A0
(8W-10-7)
POWER DISTRIBUTION CENTER
(8W-10-2)
FUSE 12 50A
(8W-10-20)
12
A146 10 OR/WT
H
C106
A146 10 OR/WT
2
C4
RUN A22
(8W-10-18)
JUNCTION BLOCK
(8W-12-2)
(8W-12-3)
FUSE 18 20A
FUSE 19 10A
BODY CONTROL MODULE
(8W-45-5)
16
JB
35
C1
42
C2
16
C1
L50 14 WT/TN
F20 18 DB/PK
M2 20 YL/DG
3
C309
OVERHEAD MAP/ COURTESY LAMP
(8W-44-3)
3
M2 20 YL/DG
S319
L50 14 WT/TN
33
C107
S348
L50 14 WT/TN
D
C300
L50 14 WT/TN
1
C310
L50 16 WT/TN
4
ELECTRIC BRAKE
(8W-54-3)
F20 18 DB/PK
M2 20 YL/DG
3
LEFT DOOR HANDLE COURTESY LAMP
(8W-44-3)
4
CONTROLLER ANTILOCK BRAKE
(8W-35-2)
30
TRAILER TOW BRAKE LAMP RELAY
(8W-54-5)
4
CARGO LAMP
(8W-44-4)
3
RIGHT DOOR HANDLE COURTESY LAMP
(8W-44-3)

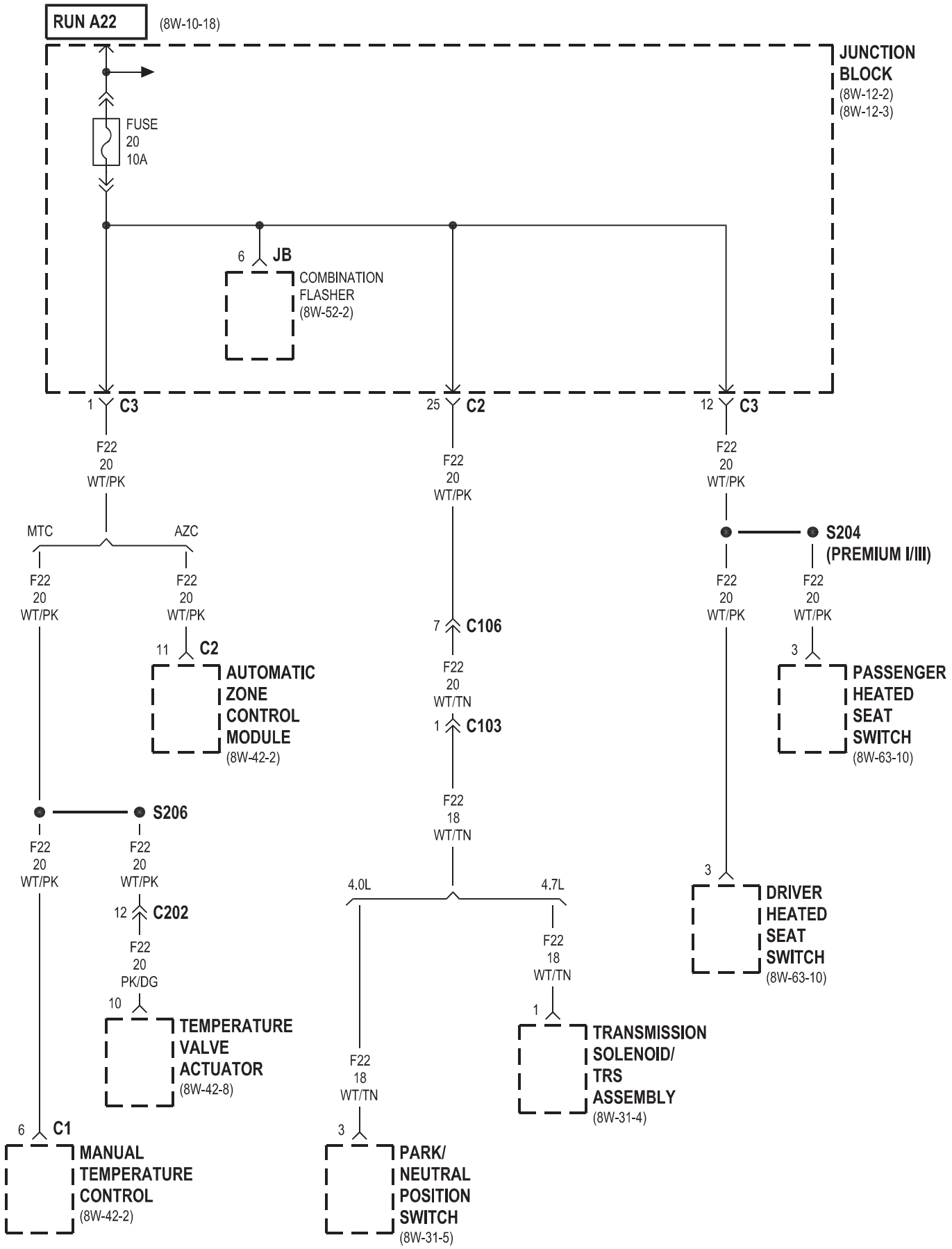
RUN A22
(8W-10-18)
JUNCTION BLOCK
(8W-12-2)
(8W-12-3)
FUSE
20
10A
6
JB
COMBINATION FLASHER
(8W-52-2)
1
C3
25
C2
12
C3
F22
20
WT/PK
MTC
AZC
S204
(PREMIUM I/III)
11
C2
AUTOMATIC ZONE CONTROL MODULE
(8W-42-2)
7
C106
F22
20
WT/TN
1
C103
3
PASSENGER HEATED SEAT SWITCH
(8W-63-10)
S206
F22
18
WT/TN
4.0L
4.7L
12
C202
F22
20
PK/DG
10
TEMPERATURE VALVE ACTUATOR
(8W-42-8)
3
DRIVER HEATED SEAT SWITCH
(8W-63-10)
1
TRANSMISSION SOLENOID/ TRS ASSEMBLY
(8W-31-4)
6
C1
MANUAL TEMPERATURE CONTROL
(8W-42-2)
3
PARK/ NEUTRAL POSITION SWITCH
(8W-31-5)

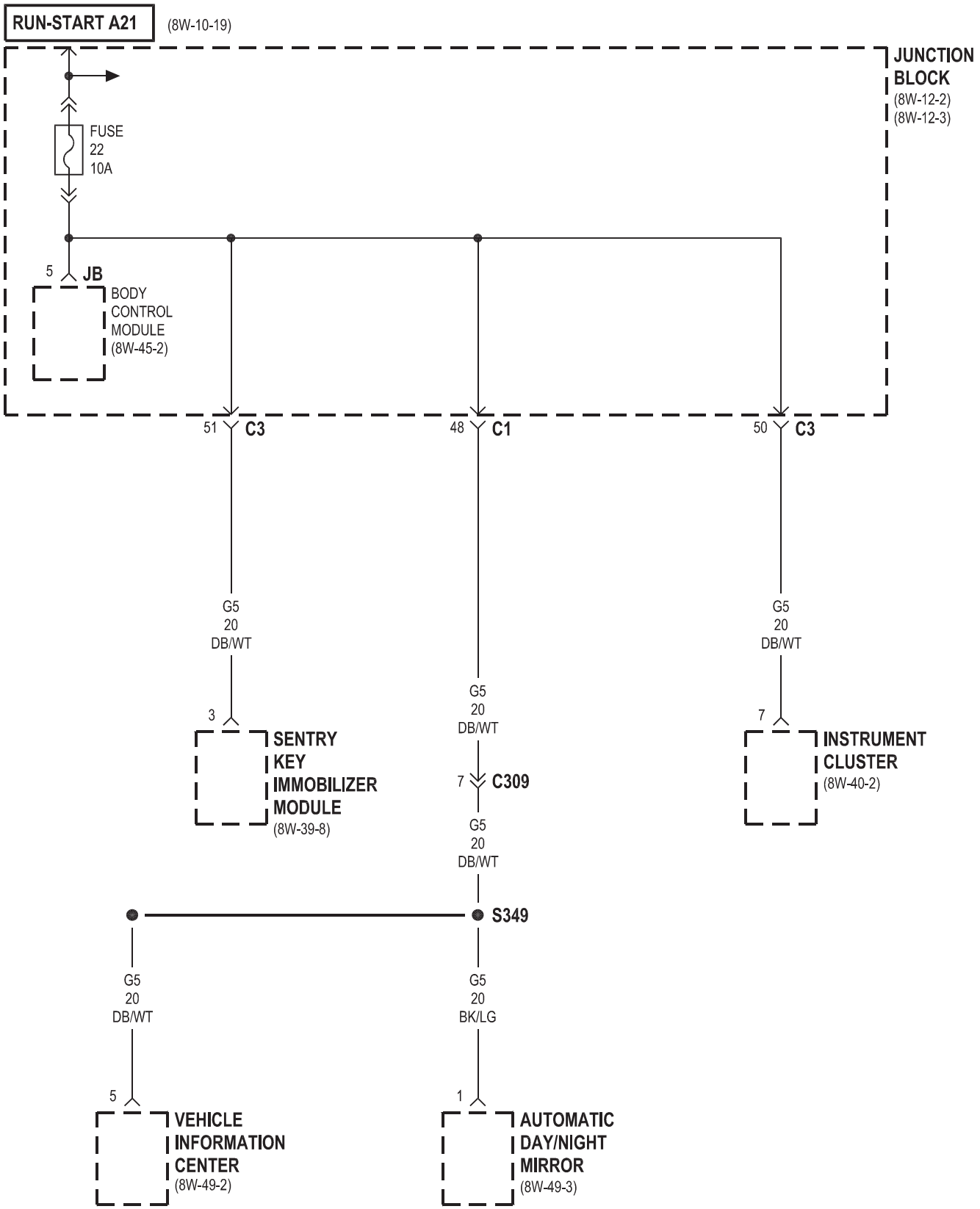
RUN-START A21
(8W-10-19)
JUNCTION BLOCK
(8W-12-2)
(8W-12-3)
FUSE
22
10A
5
JB
BODY CONTROL MODULE
(8W-45-2)
51
C3
48
C1
50
C3
G5
20
DB/WT
G5
20
DB/WT
G5
20
DB/WT
3
SENTRY KEY IMMOBILIZER MODULE
(8W-39-8)
7
C309
7
INSTRUMENT CLUSTER
(8W-40-2)
G5
20
DB/WT
S349
G5
20
DB/WT
G5
20
BK/LG
5
VEHICLE INFORMATION CENTER
(8W-49-2)
1
AUTOMATIC DAY/NIGHT MIRROR
(8W-49-3)

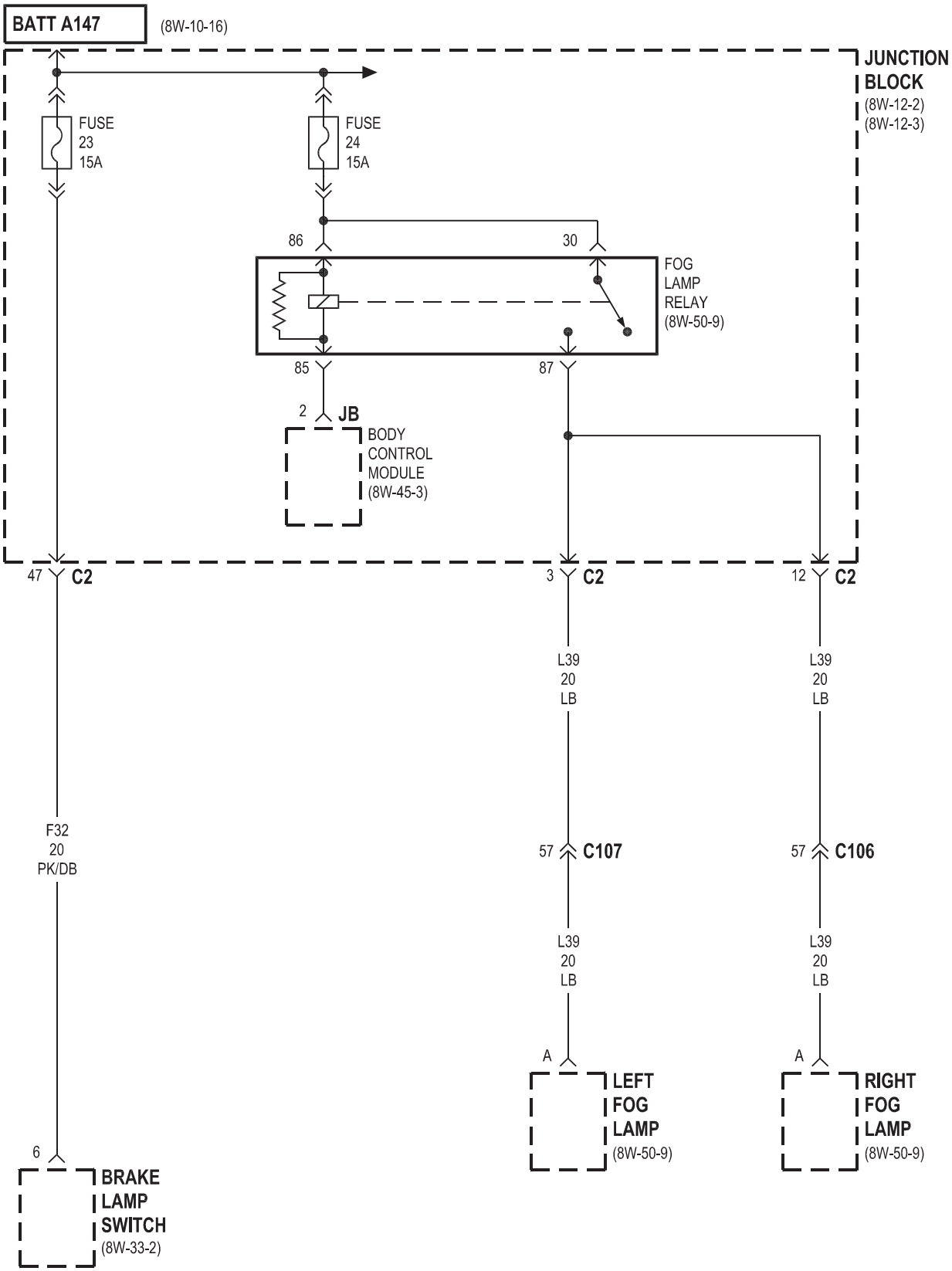
BATT A147
(8W-10-16)
JUNCTION BLOCK
(8W-12-2)
(8W-12-3)
FUSE 23 15A
FUSE 24 15A
86
30
FOG LAMP RELAY
(8W-50-9)
85
87
2
JB
BODY CONTROL MODULE
(8W-45-3)
47
C2
3
C2
12
C2
L39 20 LB
L39 20 LB
F32 20 PK/DB
57
C107
57
C106
L39 20 LB
L39 20 LB
A
A
LEFT FOG LAMP
(8W-50-9)
RIGHT FOG LAMP
(8W-50-9)
6
BRAKE LAMP SWITCH
(8W-33-2)

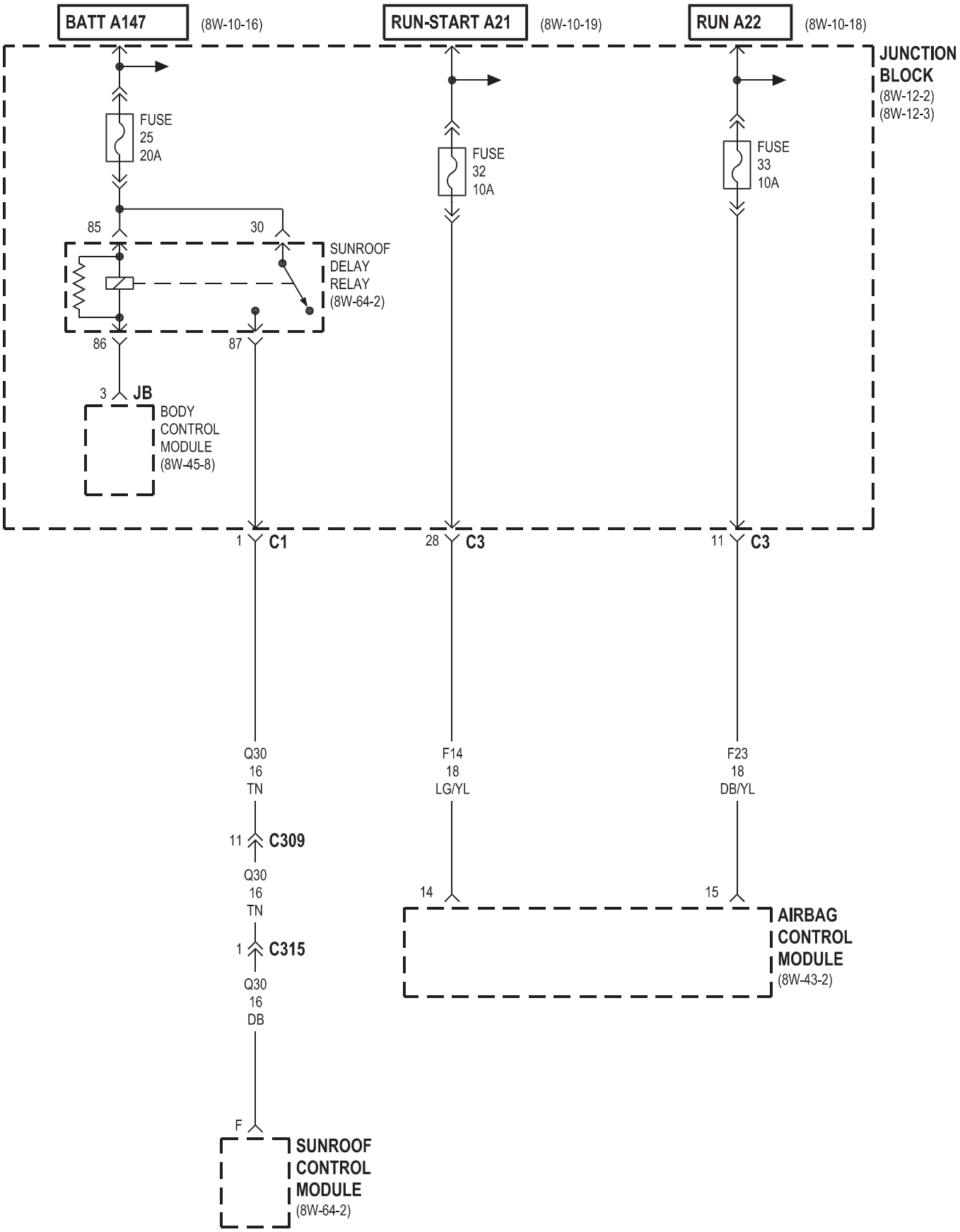
BATT A147
(8W-10-16)
RUN-START A21
(8W-10-19)
RUN A22
(8W-10-18)
JUNCTION BLOCK
(8W-12-2)
(8W-12-3)
FUSE 25 20A
FUSE 32 10A
FUSE 33 10A
85
30
SUNROOF DELAY RELAY
(8W-64-2)
86
87
3
JB
BODY CONTROL MODULE
(8W-45-8)
1
C1
28
C3
11
C3
Q30 16 TN
F14 18 LG/YL
F23 18 DB/YL
11
C309
Q30 16 TN
14
15
AIRBAG CONTROL MODULE
(8W-43-2)
1
C315
Q30 16 DB
F
SUNROOF CONTROL MODULE
(8W-64-2)

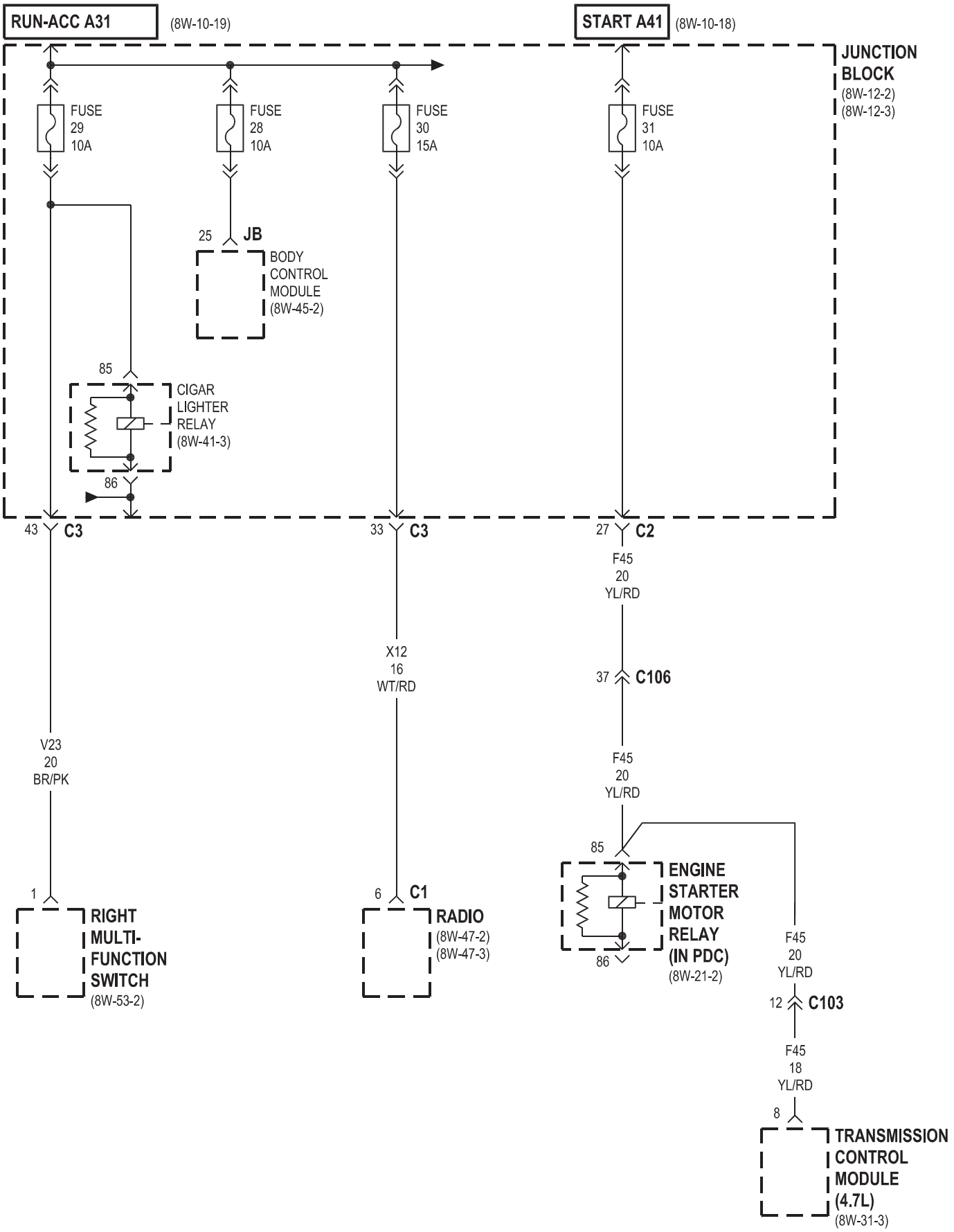
RUN-ACC A31
(8W-10-19)
START A41
(8W-10-18)
JUNCTION BLOCK
(8W-12-2)
(8W-12-3)
FUSE 29 10A
FUSE 28 10A
FUSE 30 15A
FUSE 31 10A
25
JB
BODY CONTROL MODULE
(8W-45-2)
85
CIGAR LIGHTER RELAY
(8W-41-3)
86
43
C3
33
C3
27
C2
F45
20
YL/RD
X12
16
WT/RD
37
C106
V23
20
BR/PK
F45
20
YL/RD
85
ENGINE STARTER MOTOR RELAY (IN PDC)
(8W-21-2)
86
1
RIGHT MULTI-FUNCTION SWITCH
(8W-53-2)
6
C1
RADIO
(8W-47-2)
(8W-47-3)
F45
20
YL/RD
12
C103
F45
18
YL/RD
8
TRANSMISSION CONTROL MODULE (4.7L)
(8W-31-3)

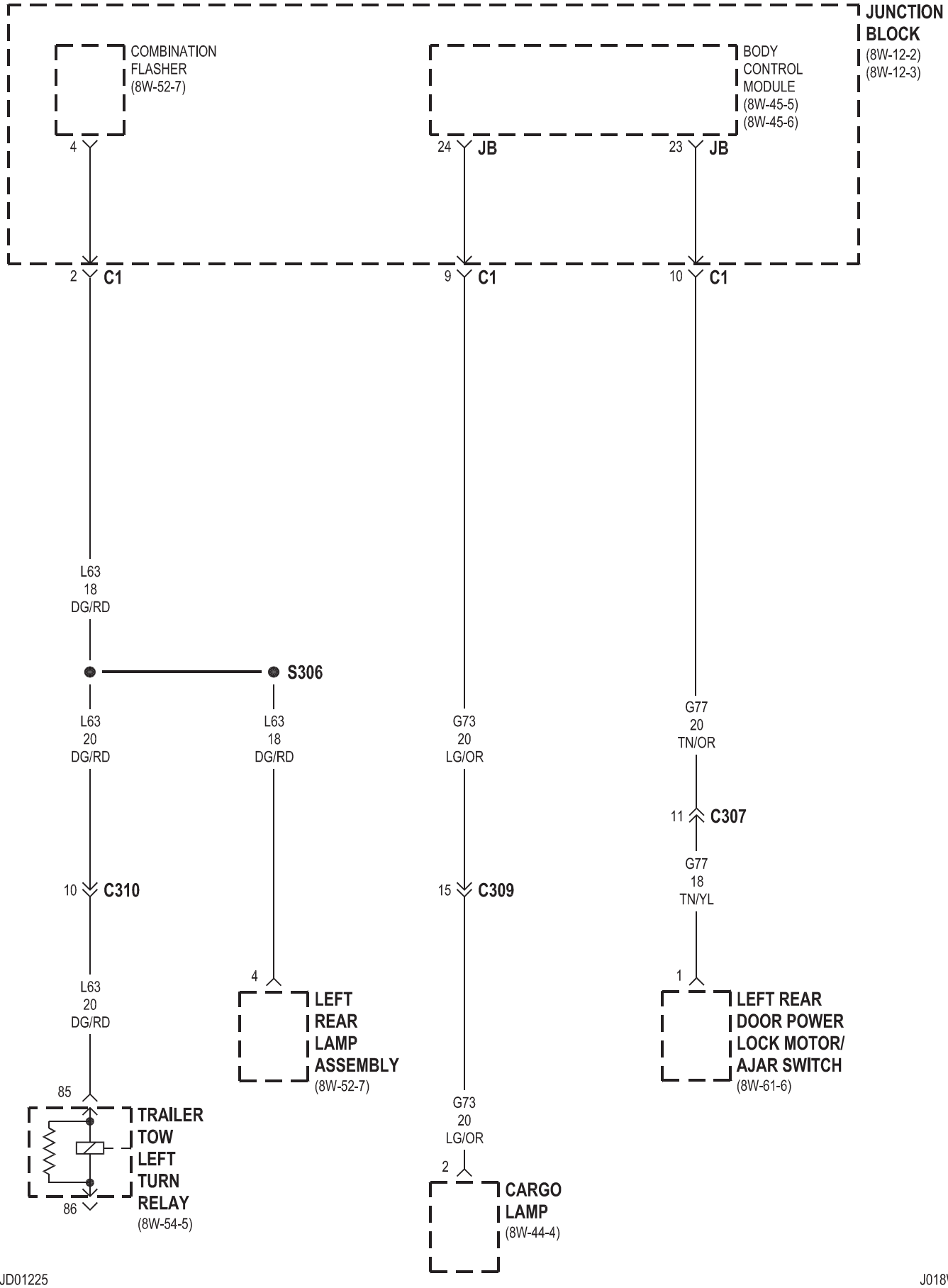
JUNCTION BLOCK
(8W-12-2)
(8W-12-3)
COMBINATION FLASHER
(8W-52-7)
BODY CONTROL MODULE
(8W-45-5)
(8W-45-6)
4
24 JB
23 JB
2 C1
9 C1
10 C1
L63
18
DG/RD
S306
L63
20
DG/RD
L63
18
DG/RD
G73
20
LG/OR
G77
20
TN/OR
11 C307
G77
18
TN/YL
10 C310
15 C309
L63
20
DG/RD
4
LEFT REAR LAMP ASSEMBLY
(8W-52-7)
1
LEFT REAR DOOR POWER LOCK MOTOR/ AJAR SWITCH
(8W-61-6)
85
TRAILER TOW LEFT TURN RELAY
(8W-54-5)
86
G73
20
LG/OR
2
CARGO LAMP
(8W-44-4)

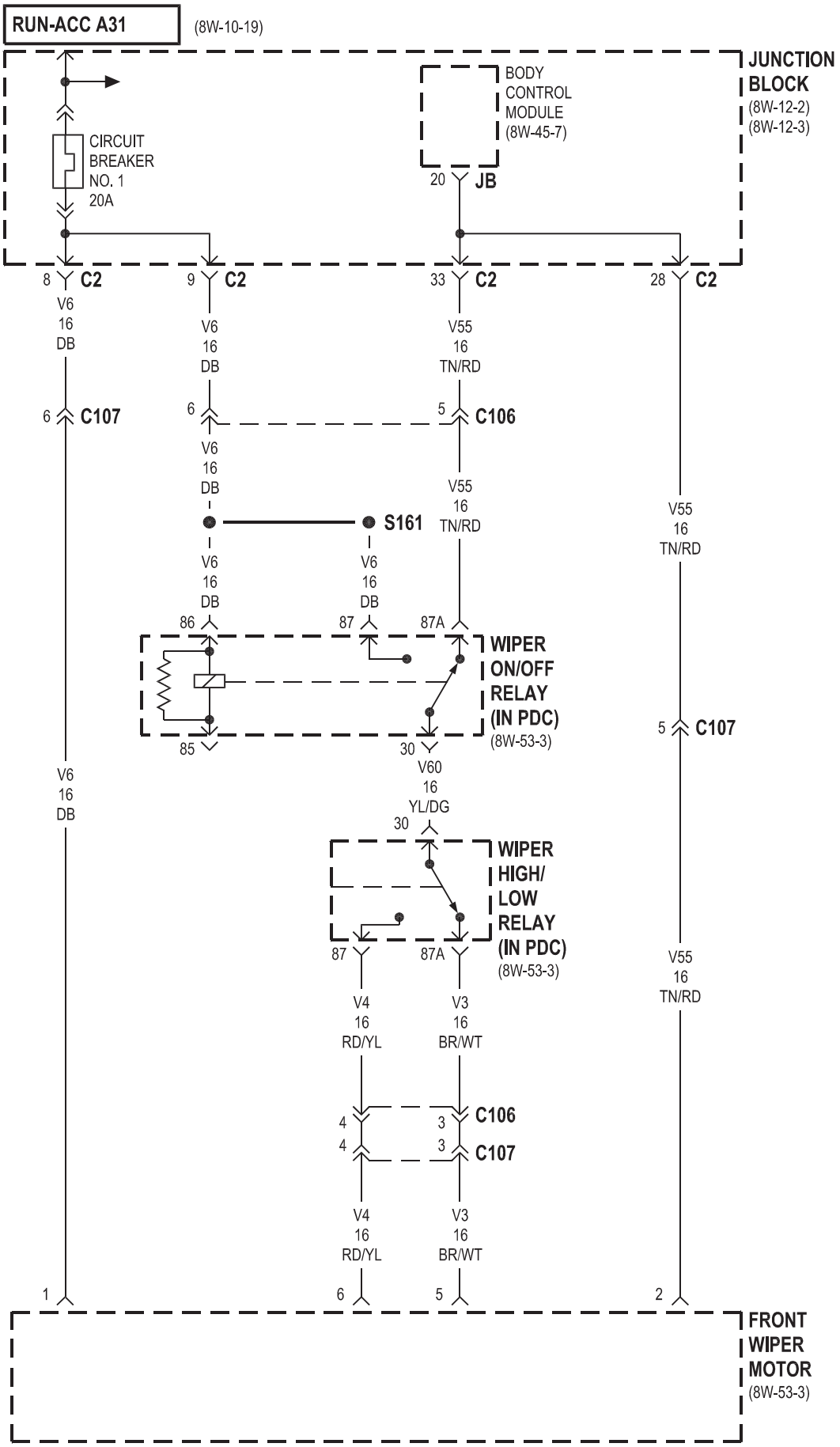
RUN-ACC A31
(8W-10-19)
JUNCTION BLOCK
(8W-12-2)
(8W-12-3)
BODY CONTROL MODULE
(8W-45-7)
CIRCUIT BREAKER NO. 1 20A
20 JB
8 C2
9 C2
33 C2
28 C2
V6 16 DB
V6 16 DB
V55 16 TN/RD
6 C107
6
5 C106
V6 16 DB
V55 16 TN/RD
S161
V55 16 TN/RD
V6 16 DB
V6 16 DB
86
87
87A
WIPER ON/OFF RELAY (IN PDC)
(8W-53-3)
85
30
5 C107
V60 16 YL/DG
V6 16 DB
30
WIPER HIGH/ LOW RELAY (IN PDC)
(8W-53-3)
87
87A
V55 16 TN/RD
V4 16 RD/YL
V3 16 BR/WT
4
3 C106
4
3 C107
V4 16 RD/YL
V3 16 BR/WT
1
6
5
2
FRONT WIPER MOTOR
(8W-53-3)

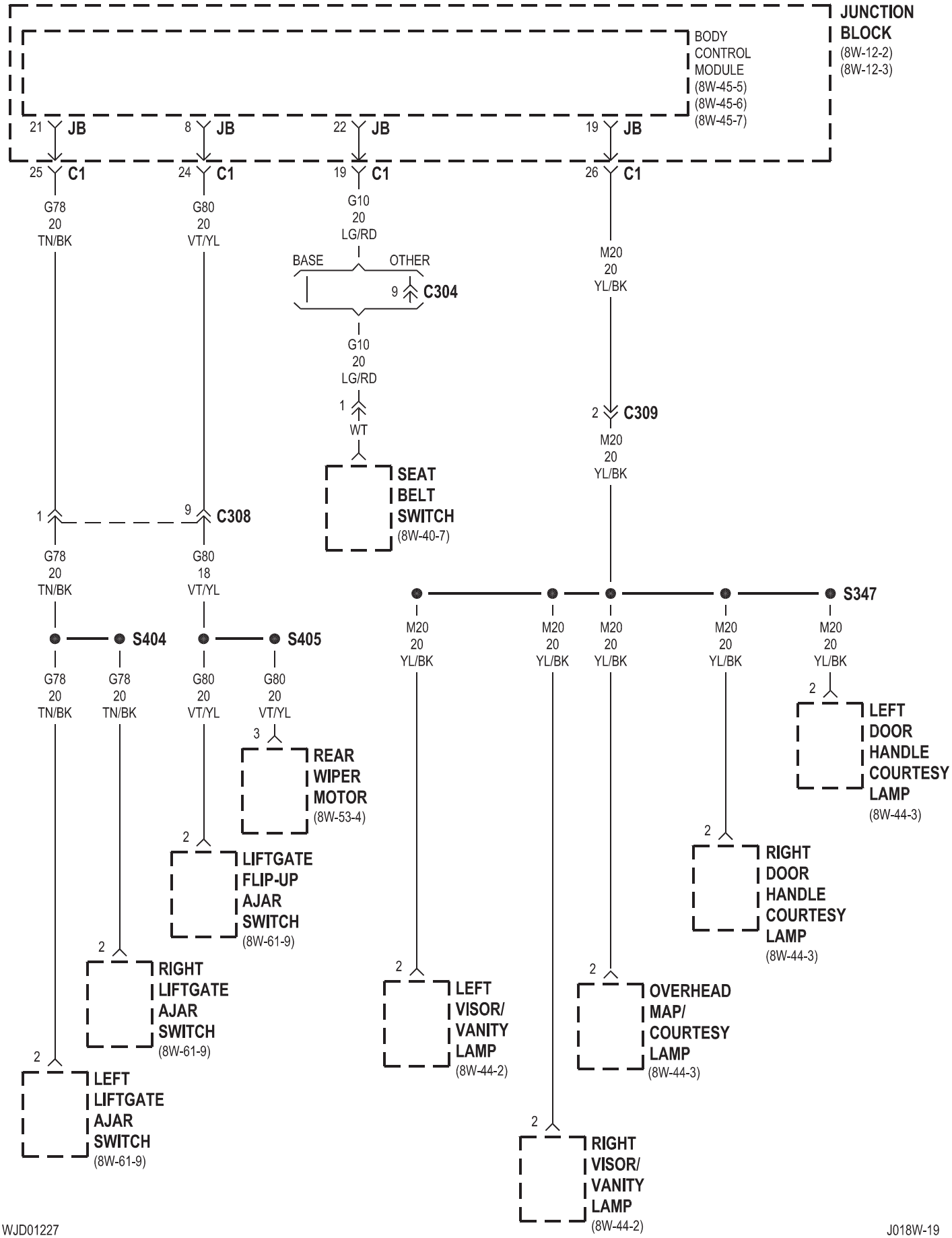
JUNCTION BLOCK
(8W-12-2)
(8W-12-3)
BODY CONTROL MODULE
(8W-45-5)
(8W-45-6)
(8W-45-7)
21 JB
8 JB
22 JB
19 JB
25 C1
24 C1
19 C1
26 C1
G78 20 TN/BK
G80 20 VT/YL
G10 20 LG/RD
BASE
OTHER
9 C304
G10 20 LG/RD
1 WT
SEAT BELT SWITCH
(8W-40-7)
M20 20 YL/BK
2 C309
M20 20 YL/BK
1 C308
9 C308
G78 20 TN/BK
G80 18 VT/YL
S404
S405
S347
G78 20 TN/BK
G78 20 TN/BK
G80 20 VT/YL
G80 20 VT/YL
M20 20 YL/BK
M20 20 YL/BK
M20 20 YL/BK
M20 20 YL/BK
M20 20 YL/BK
3
REAR WIPER MOTOR
(8W-53-4)
2
LIFTGATE FLIP-UP AJAR SWITCH
(8W-61-9)
2
RIGHT LIFTGATE AJAR SWITCH
(8W-61-9)
2
LEFT LIFTGATE AJAR SWITCH
(8W-61-9)
2
LEFT DOOR HANDLE COURTESY LAMP
(8W-44-3)
2
RIGHT DOOR HANDLE COURTESY LAMP
(8W-44-3)
2
LEFT VISOR/ VANITY LAMP
(8W-44-2)
2
OVERHEAD MAP/ COURTESY LAMP
(8W-44-3)
2
RIGHT VISOR/ VANITY LAMP
(8W-44-2)

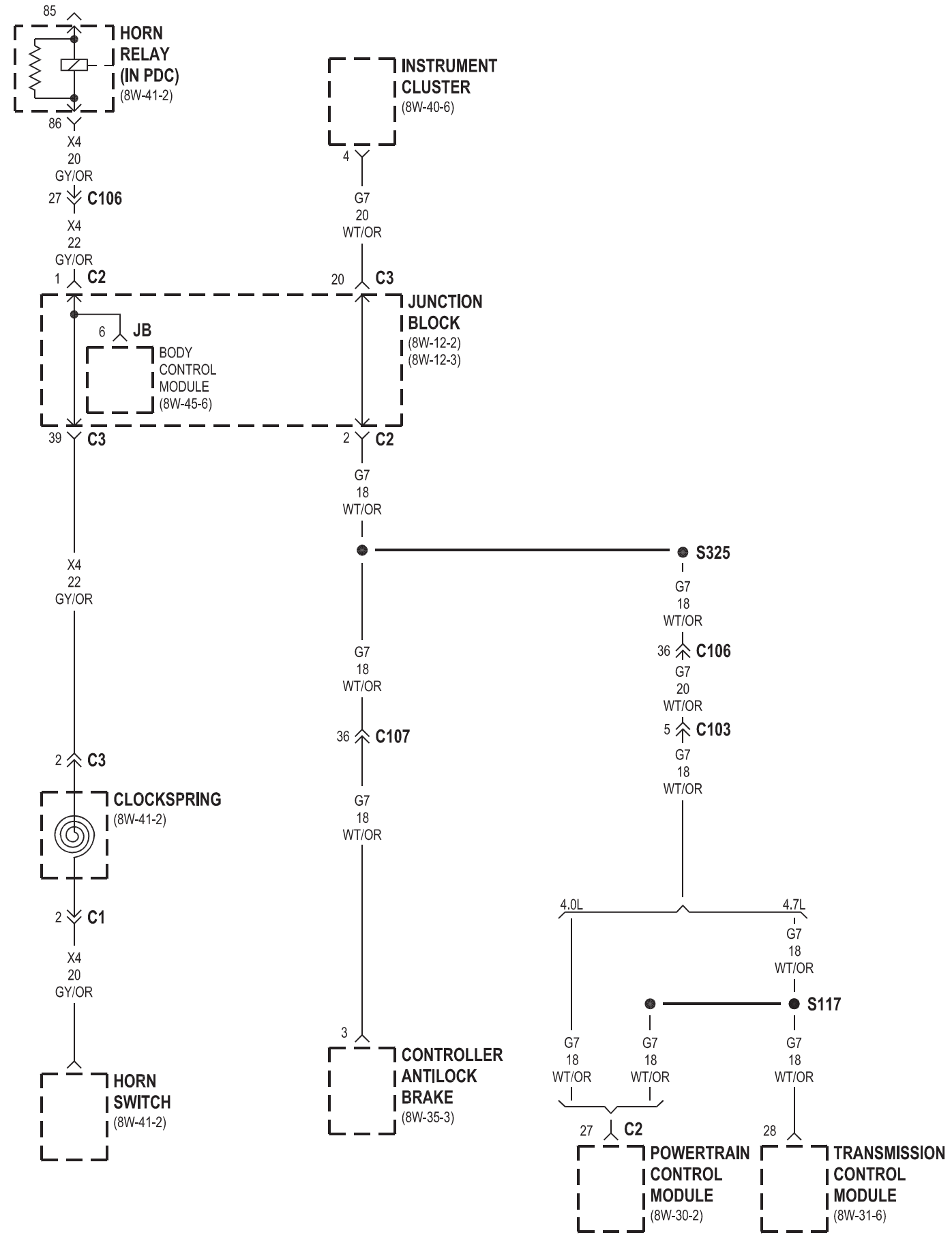
85
HORN RELAY (IN PDC)
(8W-41-2)
86
X4
20
GY/OR
27
C106
X4
22
GY/OR
1
C2
INSTRUMENT CLUSTER
(8W-40-6)
4
G7
20
WT/OR
20
C3
JUNCTION BLOCK
(8W-12-2)
(8W-12-3)
6
JB
BODY CONTROL MODULE
(8W-45-6)
39
C3
2
C2
G7
18
WT/OR
S325
G7
18
WT/OR
36
C106
G7
20
WT/OR
5
C103
G7
18
WT/OR
X4
22
GY/OR
G7
18
WT/OR
36
C107
2
C3
CLOCKSPRING
(8W-41-2)
G7
18
WT/OR
2
C1
X4
20
GY/OR
HORN SWITCH
(8W-41-2)
3
CONTROLLER ANTILOCK BRAKE
(8W-35-3)
4.0L
4.7L
G7
18
WT/OR
S117
G7
18
WT/OR
G7
18
WT/OR
G7
18
WT/OR
27
C2
28
POWERTRAIN CONTROL MODULE
(8W-30-2)
TRANSMISSION CONTROL MODULE
(8W-31-6)

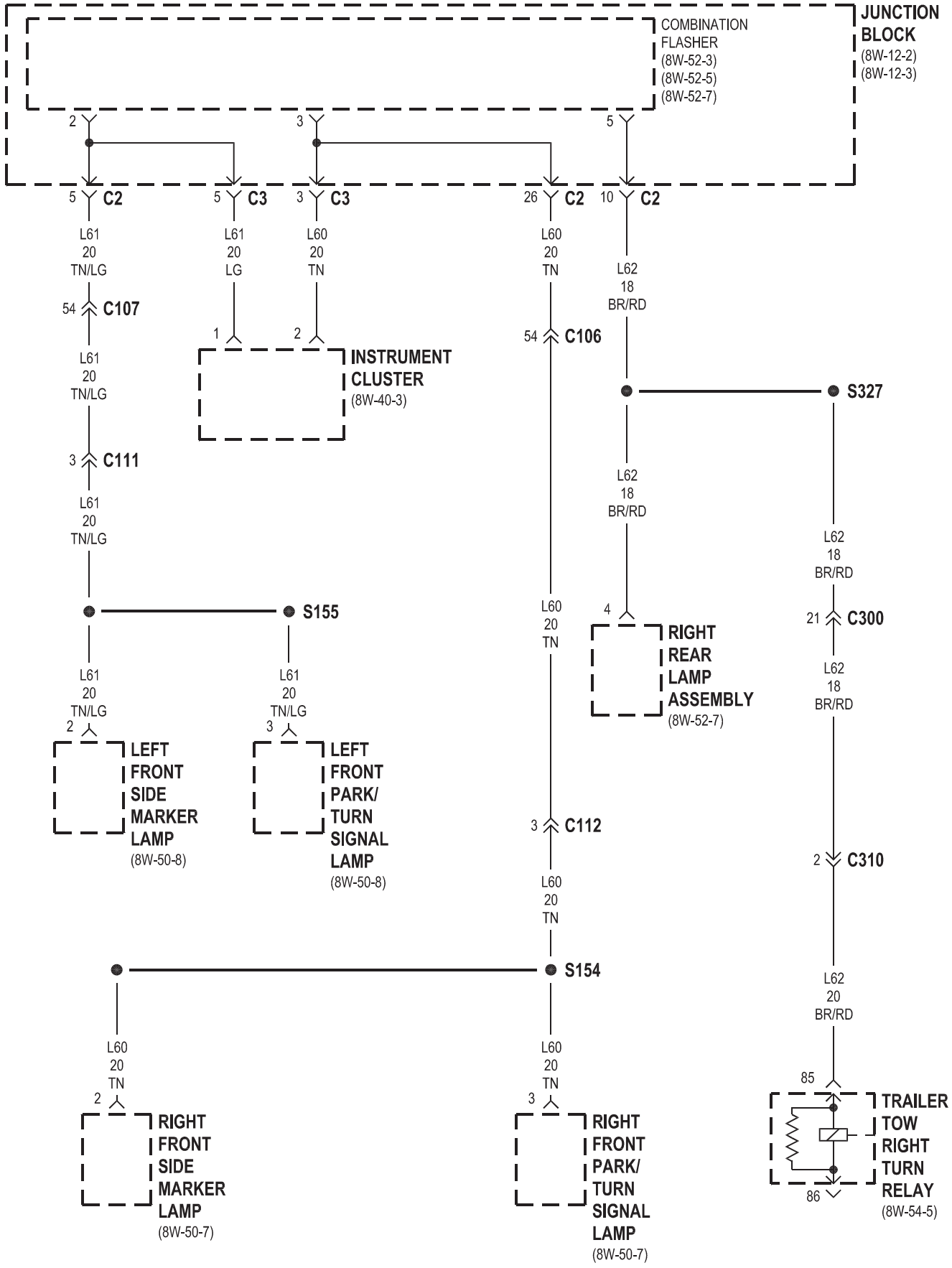
JUNCTION BLOCK
(8W-12-2)
(8W-12-3)
COMBINATION FLASHER
(8W-52-3)
(8W-52-5)
(8W-52-7)
2
3
5
5 C2
5 C3
3 C3
26 C2
10 C2
L61 20 TN/LG
L61 20 LG
L60 20 TN
L60 20 TN
L62 18 BR/RD
54 C107
1
2
54 C106
INSTRUMENT CLUSTER
(8W-40-3)
S327
L61 20 TN/LG
3 C111
L62 18 BR/RD
L62 18 BR/RD
L62 18 BR/RD
S155
L60 20 TN
4
21 C300
RIGHT REAR LAMP ASSEMBLY
(8W-52-7)
L61 20 TN/LG
L61 20 TN/LG
L62 18 BR/RD
2
3
LEFT FRONT SIDE MARKER LAMP
(8W-50-8)
LEFT FRONT PARK/ TURN SIGNAL LAMP
(8W-50-8)
3 C112
2 C310
L60 20 TN
S154
L62 20 BR/RD
L60 20 TN
L60 20 TN
85
2
3
RIGHT FRONT SIDE MARKER LAMP
(8W-50-7)
RIGHT FRONT PARK/ TURN SIGNAL LAMP
(8W-50-7)
TRAILER TOW RIGHT TURN RELAY
(8W-54-5)
86

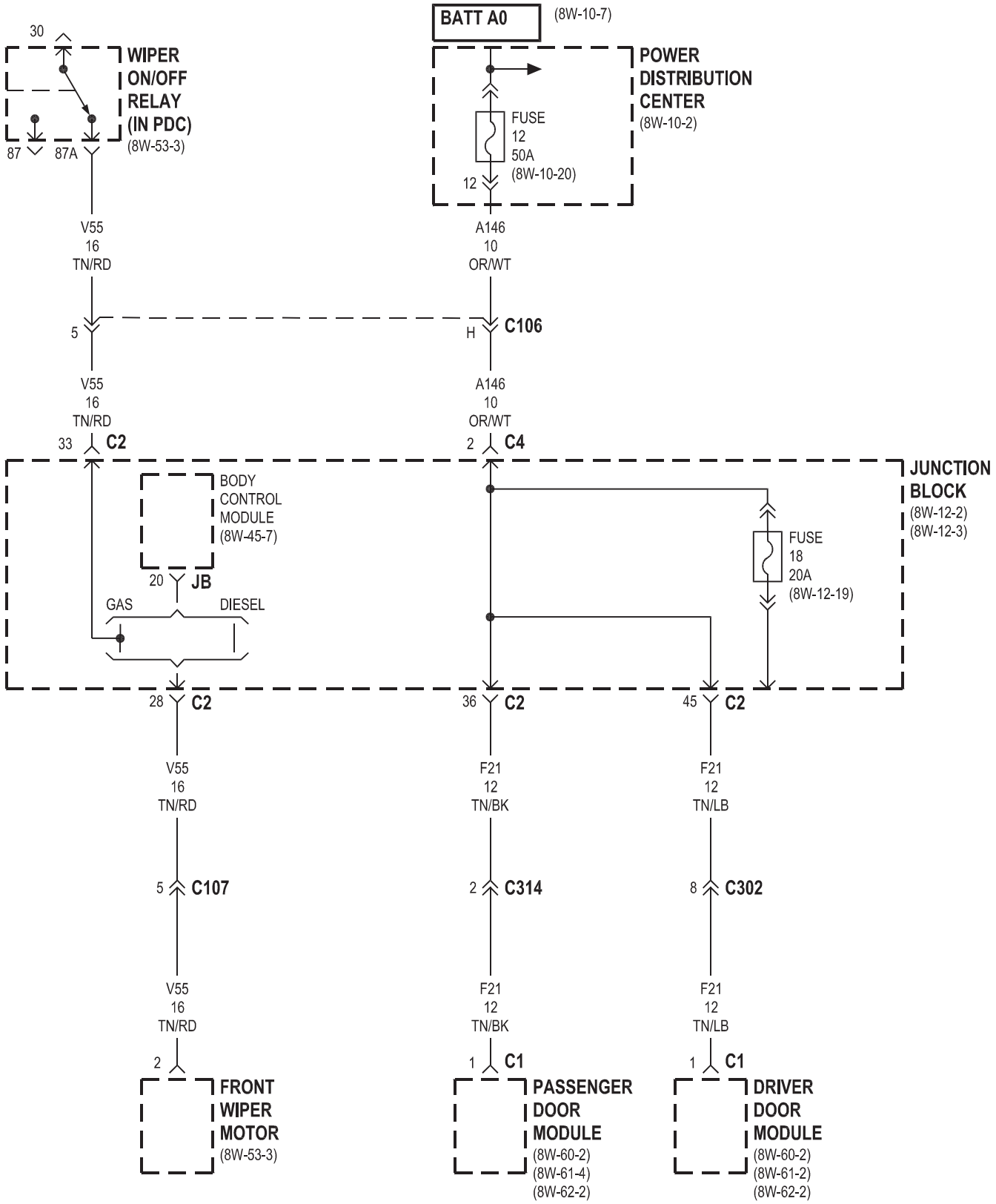
BATT A0
(8W-10-7)
30
WIPER
ON/OFF
RELAY
(IN PDC)
(8W-53-3)
87
87A
POWER
DISTRIBUTION
CENTER
(8W-10-2)
FUSE
12
50A
(8W-10-20)
12
V55
16
TN/RD
A146
10
OR/WT
5
H
C106
V55
16
TN/RD
A146
10
OR/WT
33
C2
2
C4
JUNCTION
BLOCK
(8W-12-2)
(8W-12-3)
BODY
CONTROL
MODULE
(8W-45-7)
20
JB
GAS
DIESEL
FUSE
18
20A
(8W-12-19)
28
C2
36
C2
45
C2
V55
16
TN/RD
F21
12
TN/BK
F21
12
TN/LB
5
C107
2
C314
8
C302
V55
16
TN/RD
F21
12
TN/BK
F21
12
TN/LB
2
1
C1
1
C1
FRONT
WIPER
MOTOR
(8W-53-3)
PASSENGER
DOOR
MODULE
(8W-60-2)
(8W-61-4)
(8W-62-2)
DRIVER
DOOR
MODULE
(8W-60-2)
(8W-61-2)
(8W-62-2)

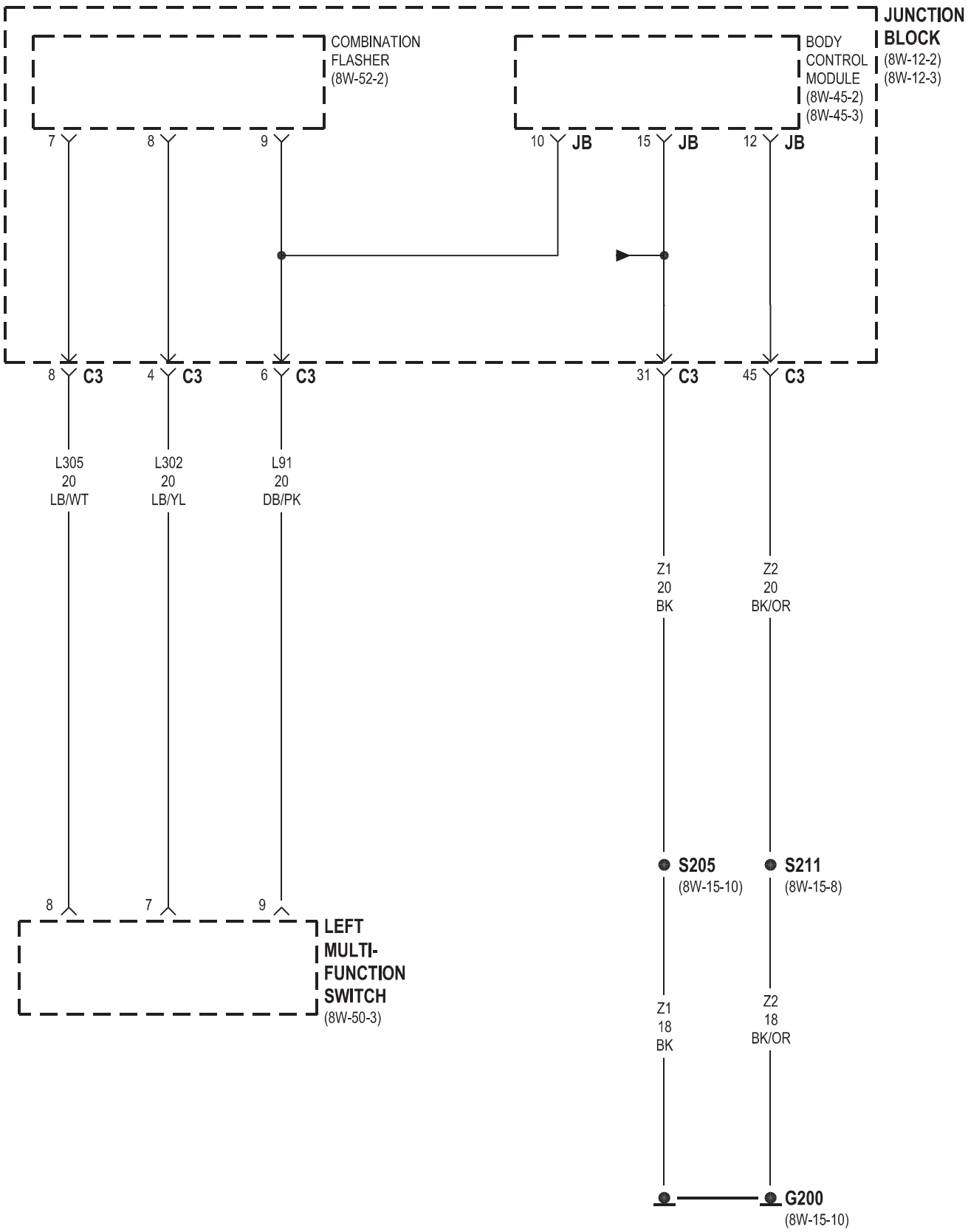
JUNCTION BLOCK
(8W-12-2)
(8W-12-3)
COMBINATION FLASHER
(8W-52-2)
BODY CONTROL MODULE
(8W-45-2)
(8W-45-3)
7
8
9
10 JB
15 JB
12 JB
8 C3
4 C3
6 C3
31 C3
45 C3
L305
20
LB/WT
L302
20
LB/YL
L91
20
DB/PK
Z1
20
BK
Z2
20
BK/OR
S205
(8W-15-10)
S211
(8W-15-8)
8
7
9
LEFT MULTI-FUNCTION SWITCH
(8W-50-3)
Z1
18
BK
Z2
18
BK/OR
G200
(8W-15-10)

8W-15 GROUND DISTRIBUTION

Component	Page
A/C Compressor Clutch	8W-15-3
A/C Low Pressure Switch	8W-15-6
Airbag Control Module	8W-15-11
Ash Receiver Lamp	8W-15-9
Automatic Day/Night Mirror	8W-15-13
Automatic Zone Control Module	8W-15-10
Battery	8W-15-2
Blower Motor Controller	8W-15-10
Body Control Module	8W-15-7, 8, 10
Brake Lamp Switch	8W-15-12
Center High Mounted Stop Lamp	8W-15-14
Cigar Lighter	8W-15-9
Cigar Lighter Relay	8W-15-7
Controller Antilock Brake	8W-15-7
Coolant Level Sensor	8W-15-6
Data Link Connector	8W-15-2
Driver Cylinder Lock Switch	8W-15-11
Driver Door Lock Motor/Ajar Switch	8W-15-11
Driver Door Module	8W-15-11
Driver Heated Seat Switch	8W-15-9
Driver Lumbar Switch	8W-15-15
Driver Power Seat Switch	8W-15-15
Driver Rear Power Window Switch	8W-15-15
Electric Brake	8W-15-12
Electronic Speed Control Servo	8W-15-6
Front Power Outlet	8W-15-9
Front Washer Pump	8W-15-4
Front Wiper Motor	8W-15-4
Fuel Pump Module	8W-15-13
G100	8W-15-2
G101	8W-15-2
G102	8W-15-2
G103	8W-15-2
G104	8W-15-3
G106	8W-15-4
G107	8W-15-7
G108	8W-15-6
G200	8W-15-10
G201	8W-15-11
G300	8W-15-12
G301	8W-15-15
Horn No. 1	8W-15-6
Horn No. 2	8W-15-6
Ignition Switch	8W-15-10
Instrument Cluster	8W-15-8, 9
Junction Block	8W-15-7, 8
Left Fog Lamp	8W-15-4
Left Front Park Lamp	8W-15-3
Left Front Park/Turn Signal Lamp	8W-15-3
Left High Beam Headlamp	8W-15-3
Left Liftgate Ajar Switch	8W-15-14
Left Low Beam Headlamp	8W-15-3
Left Multi-Function Switch	8W-15-10
Left Rear Door Power Lock Motor/Ajar Switch	8W-15-15
Left Rear Lamp Assembly	8W-15-13
License Lamp No. 1	8W-15-14
License Lamp No. 2	8W-15-14
Liftgate Flip-Up Ajar Switch	8W-15-14
Liftgate Flip-Up Release Solenoid	8W-15-14
Line Pressure Sensor	8W-15-2
Low Beam/Daytime Running Lamp Relay	8W-15-7
Manual Temperature Control	8W-15-10, 8
Overdrive Switch	8W-15-9
Oxygen Sensor 1/2 Downstream	8W-15-3
Oxygen Sensor 2/2 Downstream	8W-15-3
Park Lamp Relay	8W-15-7
Passenger Door Lock Motor/Ajar Switch	8W-15-11
Passenger Door Module	8W-15-11
Passenger Heated Seat Switch	8W-15-9
Passenger Lumbar Switch	8W-15-12
Passenger Power Seat Switch	8W-15-12
Passenger Rear Power Window Switch	8W-15-11
Power Amplifier	8W-15-12
Power Connector	8W-15-10
Powertrain Control Module	8W-15-2
Radiator Fan Motor	8W-15-6
Radiator Fan Relay	8W-15-6
Radio	8W-15-12
Rear Power Outlet	8W-15-12
Rear Washer Pump	8W-15-4
Rear Window Defogger	8W-15-14
Rear Wiper Motor	8W-15-14
Right Fog Lamp	8W-15-6
Right Front Park Lamp	8W-15-5
Right Front Park/Turn Signal Lamp	8W-15-5
Right High Beam Headlamp	8W-15-5
Right Liftgate Ajar Switch	8W-15-14
Right Low Beam Headlamp	8W-15-5
Right Rear Door Power Lock Motor/Ajar Switch	8W-15-11
Right Rear Lamp Assembly	8W-15-12
Seat Belt Switch	8W-15-15
Seat Module	8W-15-15
Sentry Key Immobilizer Module	8W-15-8
Sunroof Control Module	8W-15-13
Sunroof Motor	8W-15-13
Sunroof Switch	8W-15-13
Temperature Valve Actuator	8W-15-8
Trailer Tow Brake Lamp Relay	8W-15-13
Trailer Tow Connector	8W-15-13
Trailer Tow Left Turn Relay	8W-15-13
Trailer Tow Right Turn Relay	8W-15-13
Transfer Case Switch	8W-15-3
Transmission Control Module	8W-15-2
Transmission Control Relay	8W-15-6
Transmission Range Indicator Illumination	8W-15-10
Underhood Lamp	8W-15-4
Vehicle Information Center	8W-15-15
Washer Fluid Level Switch	8W-15-4
Wiper High/Low Relay	8W-15-6

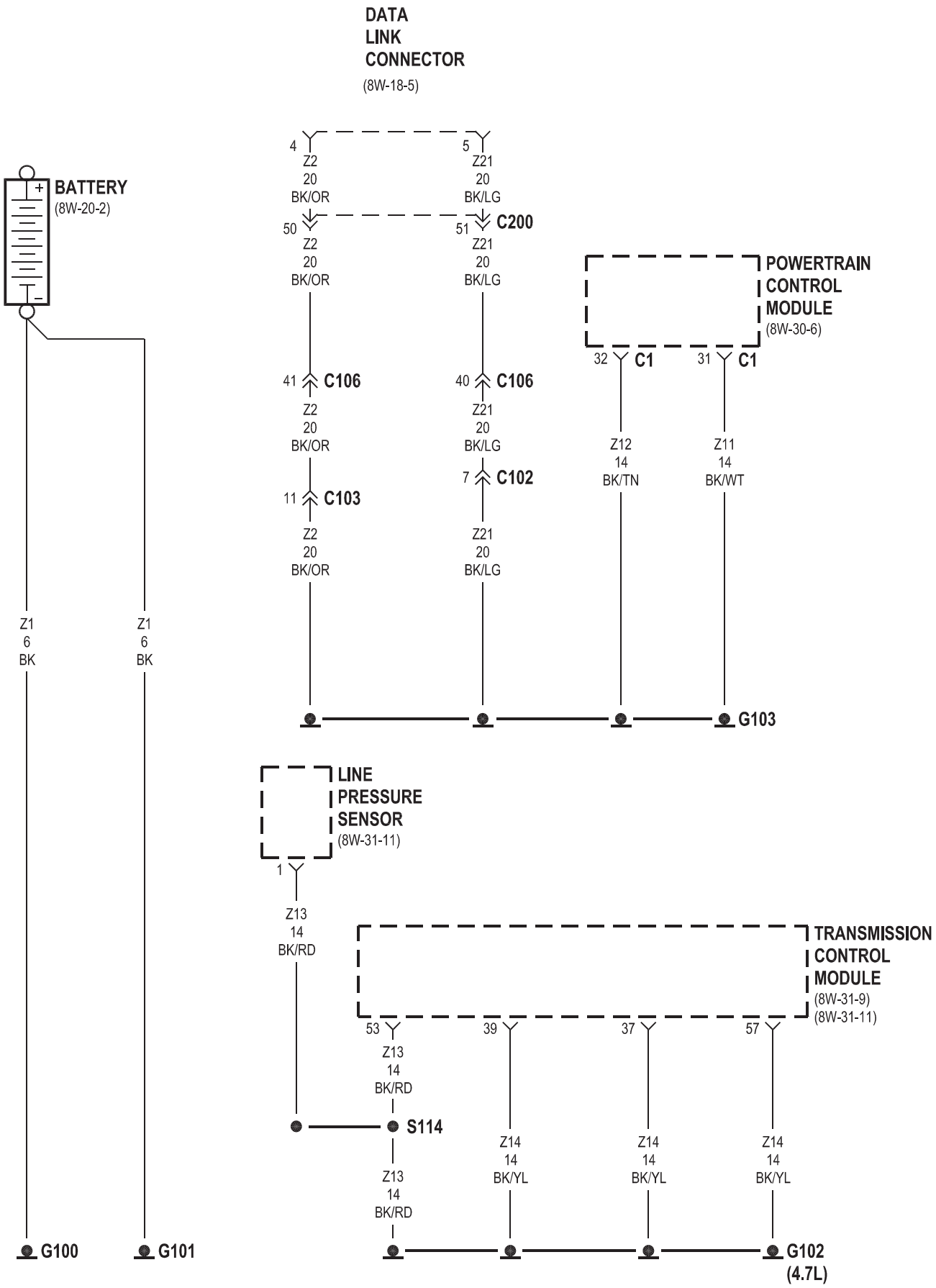
DATA
LINK
CONNECTOR
(8W-18-5)
BATTERY
(8W-20-2)
4
Z2
20
BK/OR
5
Z21
20
BK/LG
50
Z2
20
BK/OR
51
C200
Z21
20
BK/LG
POWERTRAIN
CONTROL
MODULE
(8W-30-6)
32
C1
31
C1
41
C106
40
C106
Z2
20
BK/OR
Z21
20
BK/LG
Z12
14
BK/TN
Z11
14
BK/WT
7
C102
11
C103
Z2
20
BK/OR
Z21
20
BK/LG
Z1
6
BK
Z1
6
BK
G103
LINE
PRESSURE
SENSOR
(8W-31-11)
1
Z13
14
BK/RD
TRANSMISSION
CONTROL
MODULE
(8W-31-9)
(8W-31-11)
53
39
37
57
Z13
14
BK/RD
S114
Z14
14
BK/YL
Z14
14
BK/YL
Z14
14
BK/YL
Z13
14
BK/RD
G100
G101
G102
(4.7L)

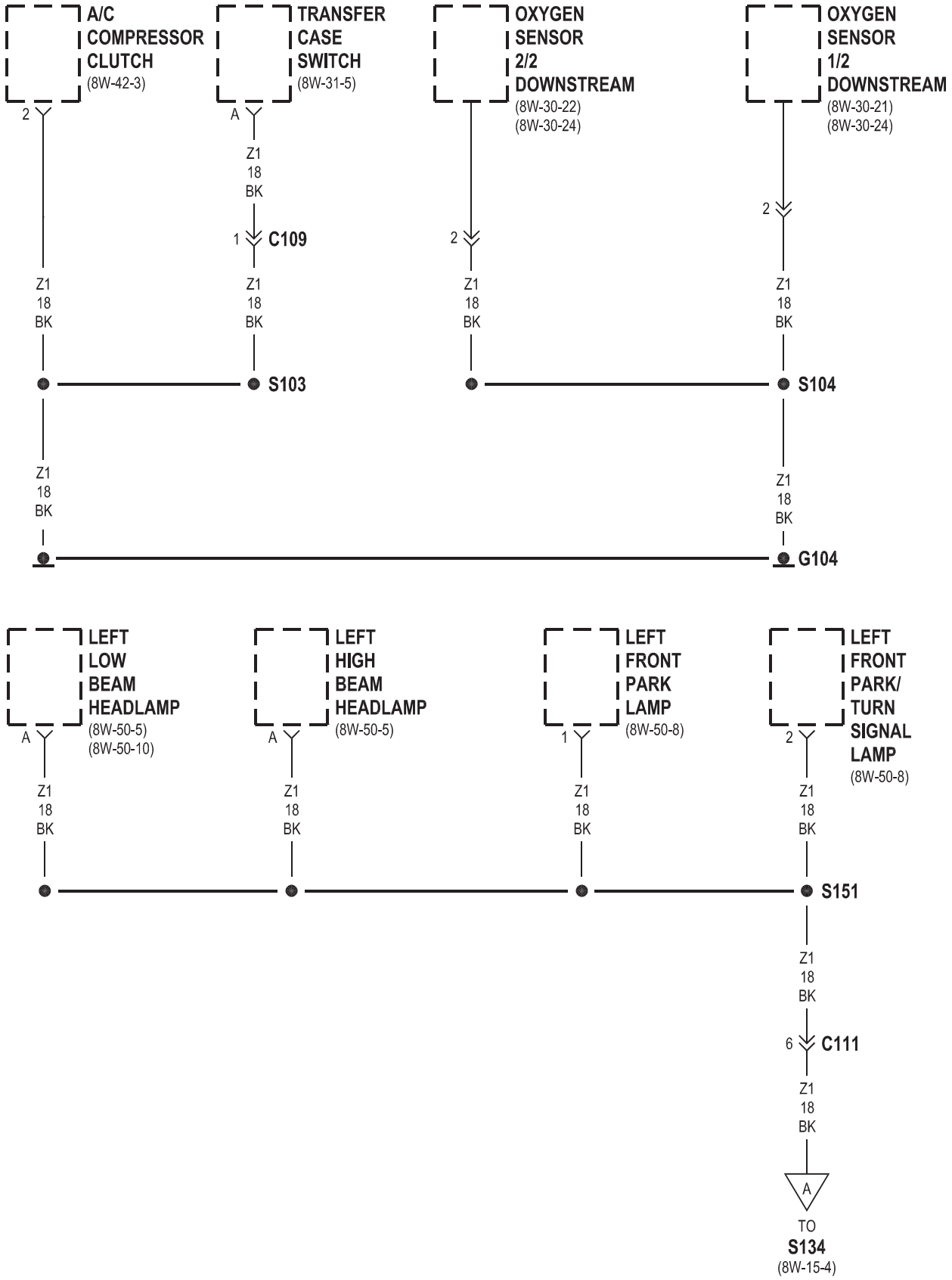
A/C COMPRESSOR CLUTCH (8W-42-3)
TRANSFER CASE SWITCH (8W-31-5)
OXYGEN SENSOR 2/2 DOWNSTREAM (8W-30-22) (8W-30-24)
OXYGEN SENSOR 1/2 DOWNSTREAM (8W-30-21) (8W-30-24)
2
A
Z1 18 BK
1
C109
2
2
Z1 18 BK
Z1 18 BK
Z1 18 BK
S103
S104
Z1 18 BK
Z1 18 BK
G104
LEFT LOW BEAM HEADLAMP (8W-50-5) (8W-50-10)
LEFT HIGH BEAM HEADLAMP (8W-50-5)
LEFT FRONT PARK LAMP (8W-50-8)
LEFT FRONT PARK/ TURN SIGNAL LAMP (8W-50-8)
A
A
1
2
Z1 18 BK
Z1 18 BK
Z1 18 BK
Z1 18 BK
S151
Z1 18 BK
6
C111
Z1 18 BK
A
TO
S134
(8W-15-4)

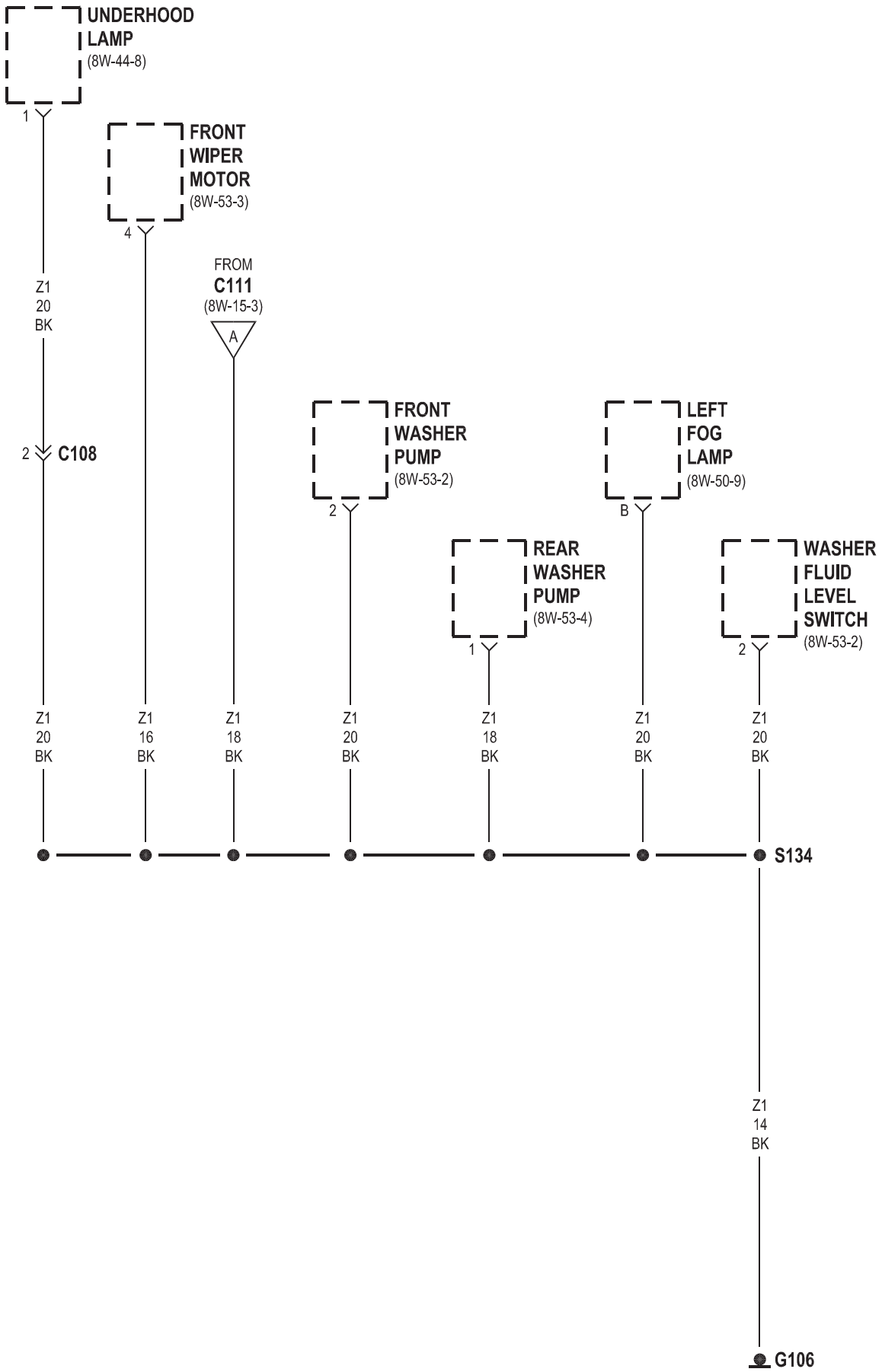
UNDERHOOD LAMP (8W-44-8)
1
FRONT WIPER MOTOR (8W-53-3)
4
FROM C111 (8W-15-3)
A
Z1 20 BK
2
C108
FRONT WASHER PUMP (8W-53-2)
2
LEFT FOG LAMP (8W-50-9)
B
REAR WASHER PUMP (8W-53-4)
1
WASHER FLUID LEVEL SWITCH (8W-53-2)
2
Z1 20 BK
Z1 16 BK
Z1 18 BK
Z1 20 BK
Z1 18 BK
Z1 20 BK
Z1 20 BK
S134
Z1 14 BK
G106

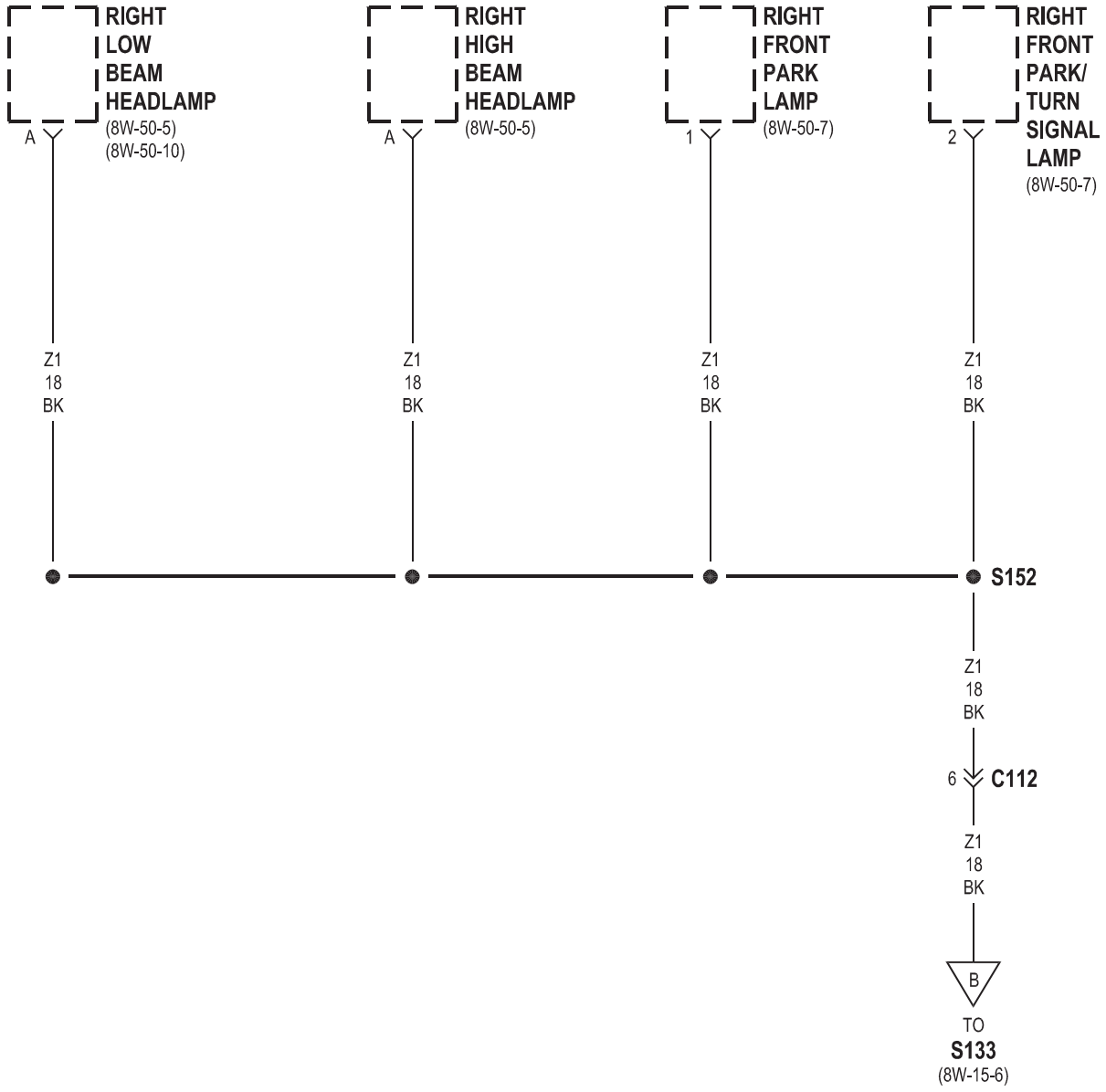
RIGHT LOW BEAM HEADLAMP
(8W-50-5)
(8W-50-10)
A
RIGHT HIGH BEAM HEADLAMP
(8W-50-5)
A
RIGHT FRONT PARK LAMP
(8W-50-7)
1
RIGHT FRONT PARK/ TURN SIGNAL LAMP
(8W-50-7)
2
Z1 18 BK
Z1 18 BK
Z1 18 BK
Z1 18 BK
S152
Z1 18 BK
6
C112
Z1 18 BK
B
TO
S133
(8W-15-6)

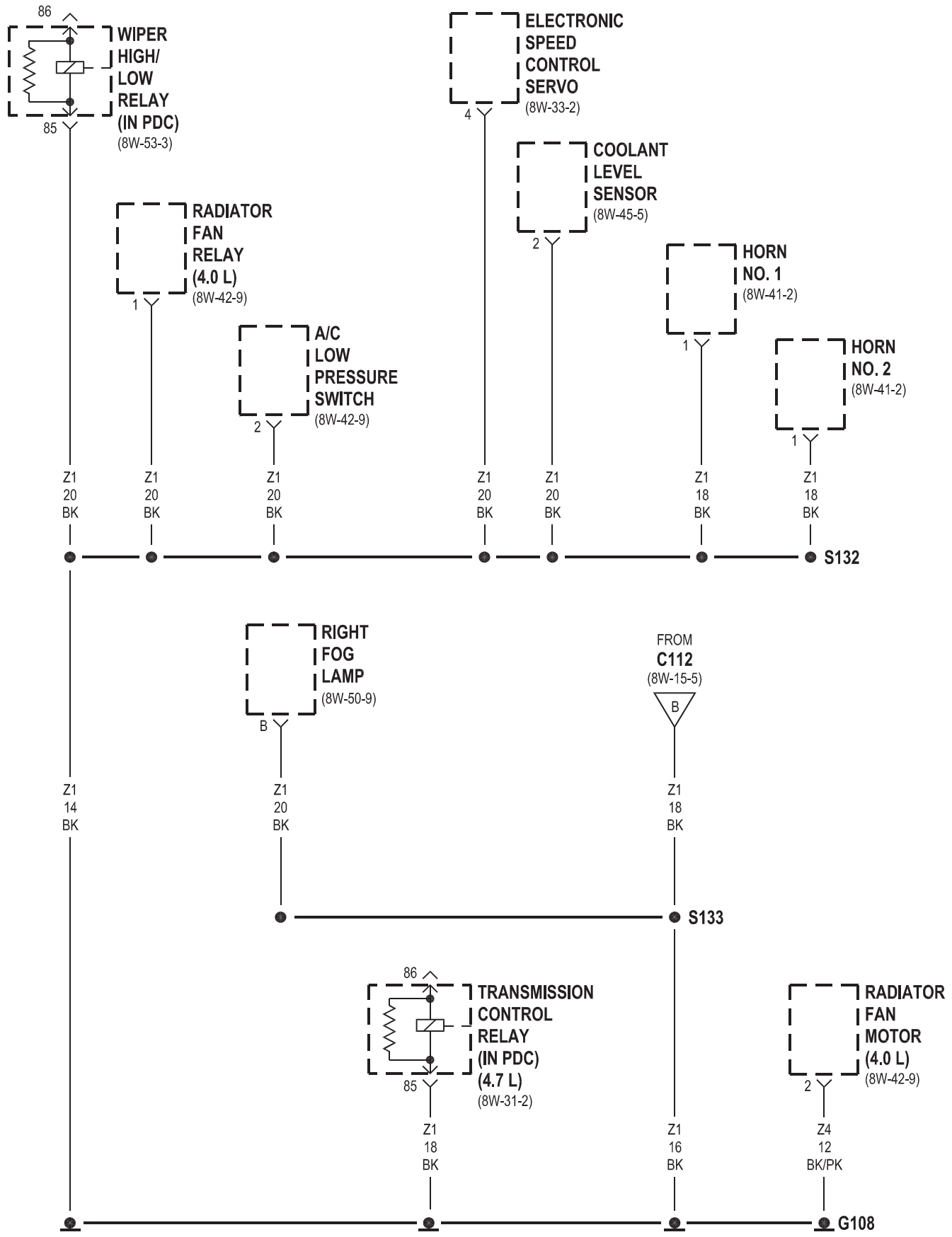
86
WIPER HIGH/ LOW RELAY (IN PDC)
(8W-53-3)
85
ELECTRONIC SPEED CONTROL SERVO
(8W-33-2)
4
COOLANT LEVEL SENSOR
(8W-45-5)
2
RADIATOR FAN RELAY (4.0 L)
(8W-42-9)
1
HORN NO. 1
(8W-41-2)
1
A/C LOW PRESSURE SWITCH
(8W-42-9)
2
HORN NO. 2
(8W-41-2)
1
Z1 20 BK
Z1 20 BK
Z1 20 BK
Z1 20 BK
Z1 20 BK
Z1 18 BK
Z1 18 BK
S132
RIGHT FOG LAMP
(8W-50-9)
B
FROM C112
(8W-15-5)
B
Z1 14 BK
Z1 20 BK
Z1 18 BK
S133
86
TRANSMISSION CONTROL RELAY (IN PDC) (4.7 L)
(8W-31-2)
85
RADIATOR FAN MOTOR (4.0 L)
(8W-42-9)
2
Z1 18 BK
Z1 16 BK
Z4 12 BK/PK
G108

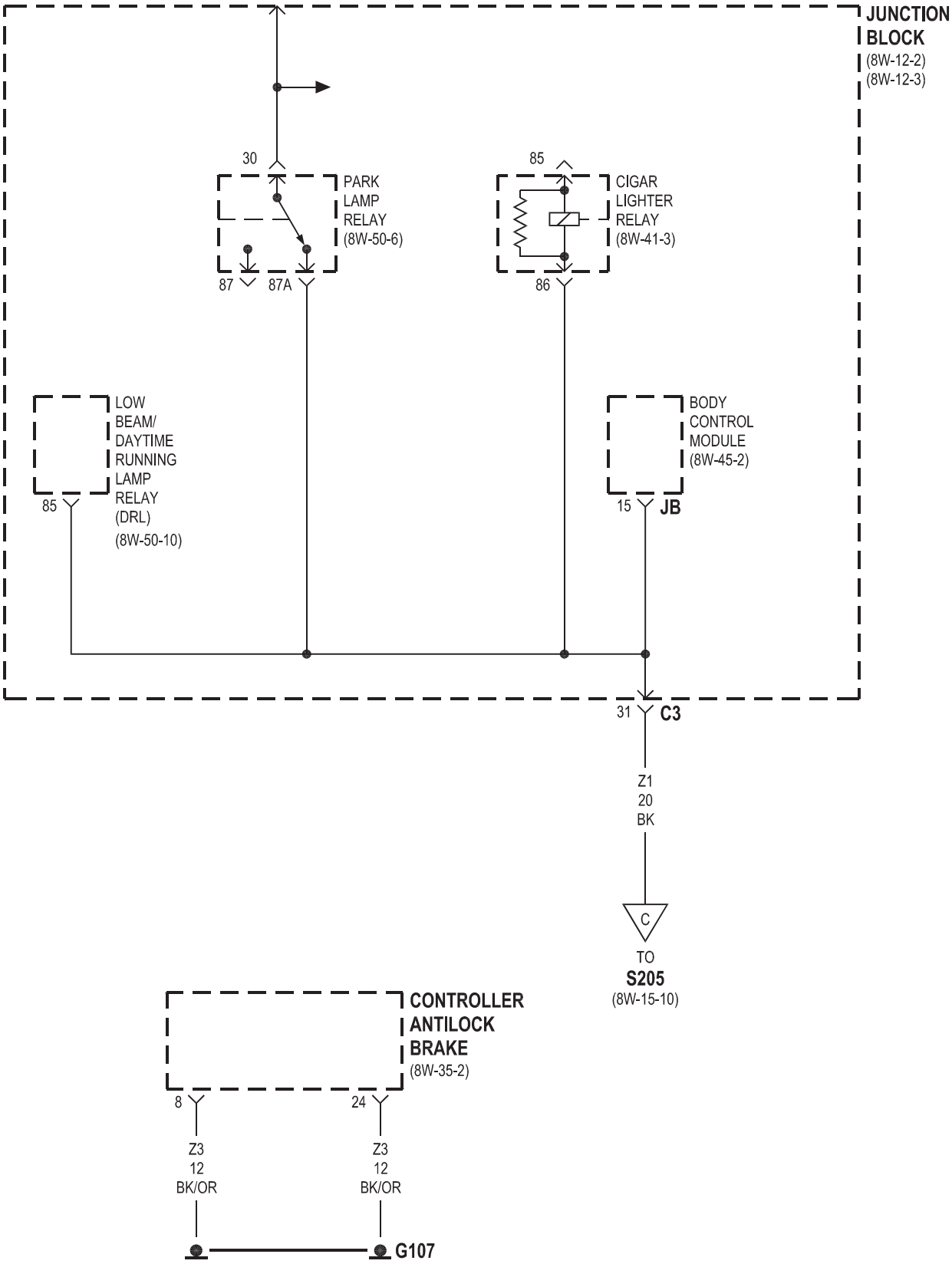
JUNCTION BLOCK
(8W-12-2)
(8W-12-3)
30
PARK LAMP RELAY
(8W-50-6)
87
87A
85
CIGAR LIGHTER RELAY
(8W-41-3)
86
LOW BEAM/ DAYTIME RUNNING LAMP RELAY (DRL)
(8W-50-10)
85
BODY CONTROL MODULE
(8W-45-2)
15
JB
31
C3
Z1
20
BK
C
TO
S205
(8W-15-10)
CONTROLLER ANTILOCK BRAKE
(8W-35-2)
8
24
Z3
12
BK/OR
Z3
12
BK/OR
G107

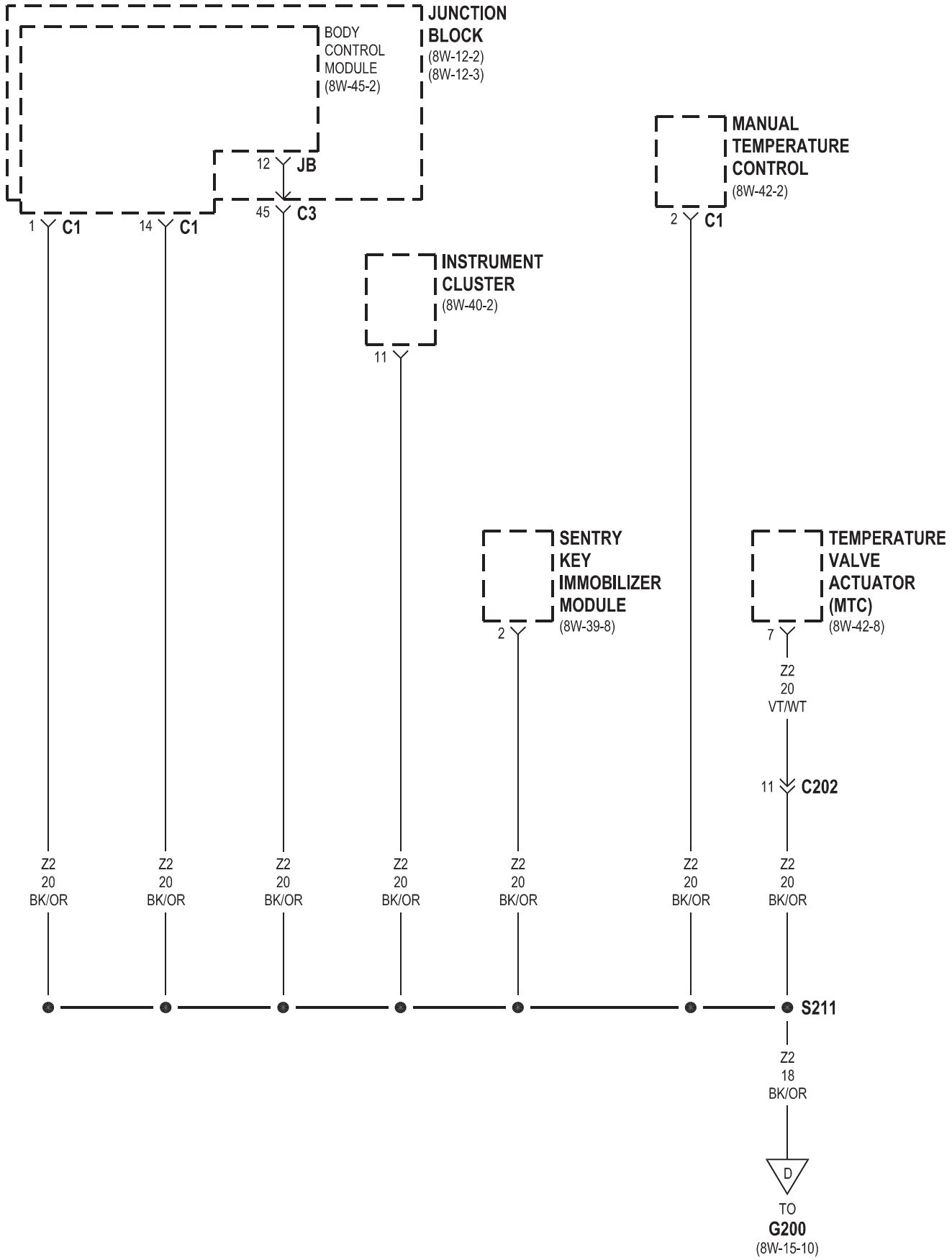
JUNCTION BLOCK
(8W-12-2)
(8W-12-3)
BODY CONTROL MODULE
(8W-45-2)
12 JB
45 C3
1 C1
14 C1
MANUAL TEMPERATURE CONTROL
(8W-42-2)
2 C1
INSTRUMENT CLUSTER
(8W-40-2)
11
SENTRY KEY IMMOBILIZER MODULE
(8W-39-8)
2
TEMPERATURE VALVE ACTUATOR (MTC)
(8W-42-8)
7
Z2 20 VT/WT
11 C202
Z2 20 BK/OR
Z2 20 BK/OR
Z2 20 BK/OR
Z2 20 BK/OR
Z2 20 BK/OR
Z2 20 BK/OR
Z2 20 BK/OR
S211
Z2 18 BK/OR
D
TO
G200
(8W-15-10)

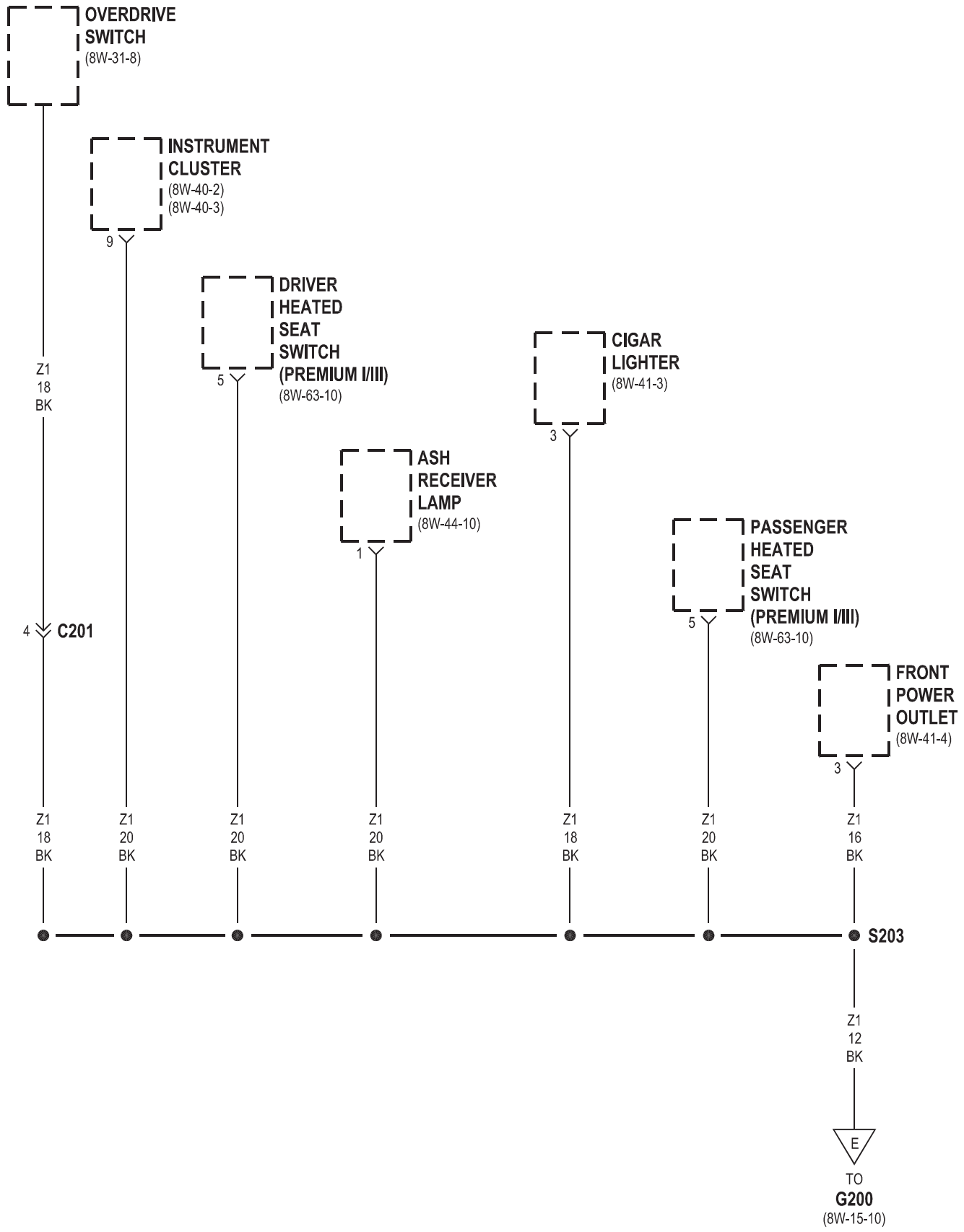
OVERDRIVE SWITCH
(8W-31-8)
INSTRUMENT CLUSTER
(8W-40-2)
(8W-40-3)
9
DRIVER HEATED SEAT SWITCH (PREMIUM I/III)
(8W-63-10)
5
CIGAR LIGHTER
(8W-41-3)
3
ASH RECEIVER LAMP
(8W-44-10)
1
PASSENGER HEATED SEAT SWITCH (PREMIUM I/III)
(8W-63-10)
5
FRONT POWER OUTLET
(8W-41-4)
3
Z1 18 BK
4
C201
Z1 18 BK
Z1 20 BK
Z1 20 BK
Z1 20 BK
Z1 18 BK
Z1 20 BK
Z1 16 BK
S203
Z1 12 BK
E
TO
G200
(8W-15-10)

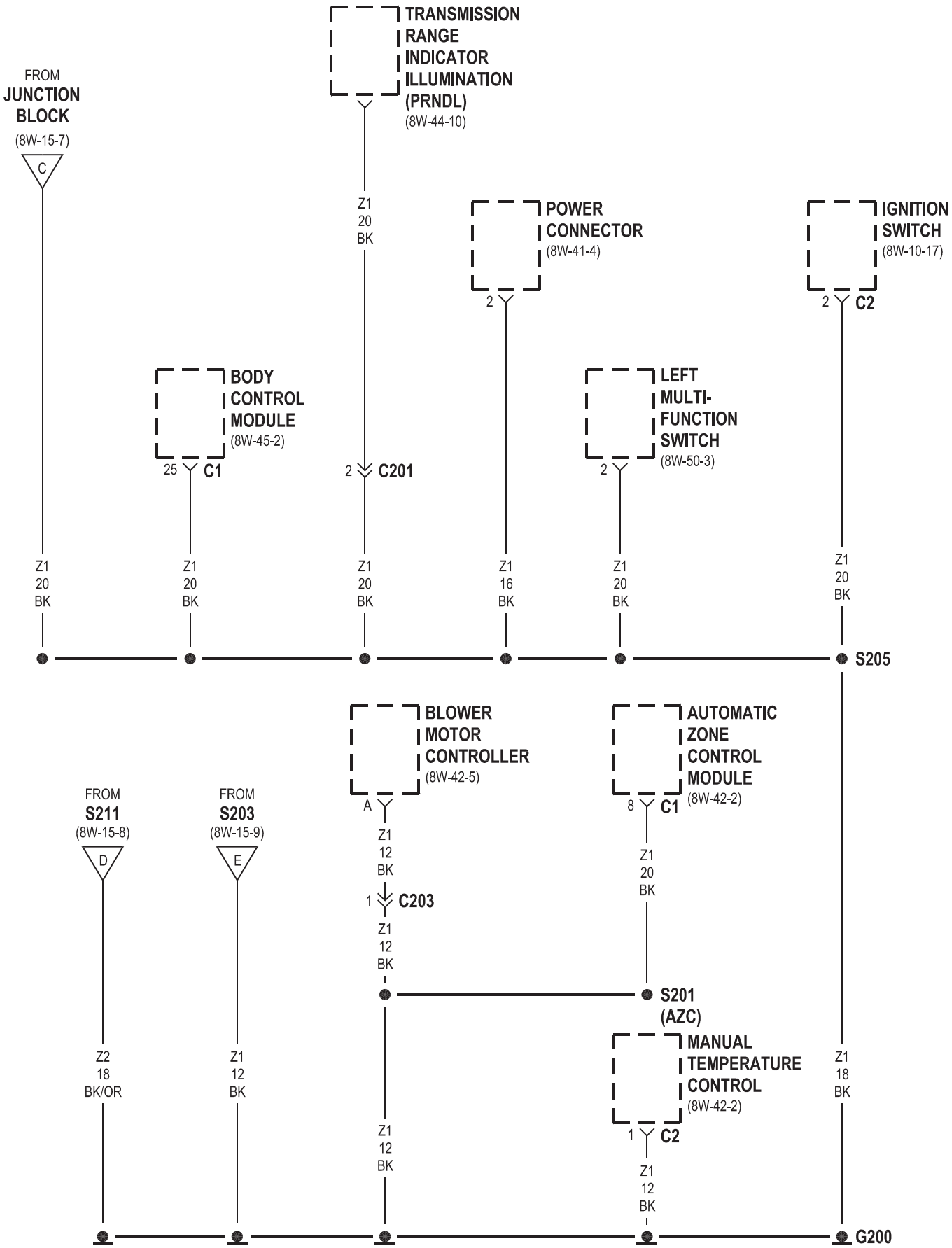
FROM
JUNCTION
BLOCK
(8W-15-7)
C
TRANSMISSION
RANGE
INDICATOR
ILLUMINATION
(PRNDL)
(8W-44-10)
Z1
20
BK
POWER
CONNECTOR
(8W-41-4)
2
IGNITION
SWITCH
(8W-10-17)
2
C2
BODY
CONTROL
MODULE
(8W-45-2)
25
C1
2
C201
LEFT
MULTI-
FUNCTION
SWITCH
(8W-50-3)
2
Z1
20
BK
Z1
16
BK
Z1
20
BK
S205
BLOWER
MOTOR
CONTROLLER
(8W-42-5)
A
Z1
12
BK
1
C203
AUTOMATIC
ZONE
CONTROL
MODULE
(8W-42-2)
8
C1
FROM
S211
(8W-15-8)
D
FROM
S203
(8W-15-9)
E
Z2
18
BK/OR
Z1
12
BK
S201
(AZC)
MANUAL
TEMPERATURE
CONTROL
(8W-42-2)
1
C2
Z1
18
BK
G200

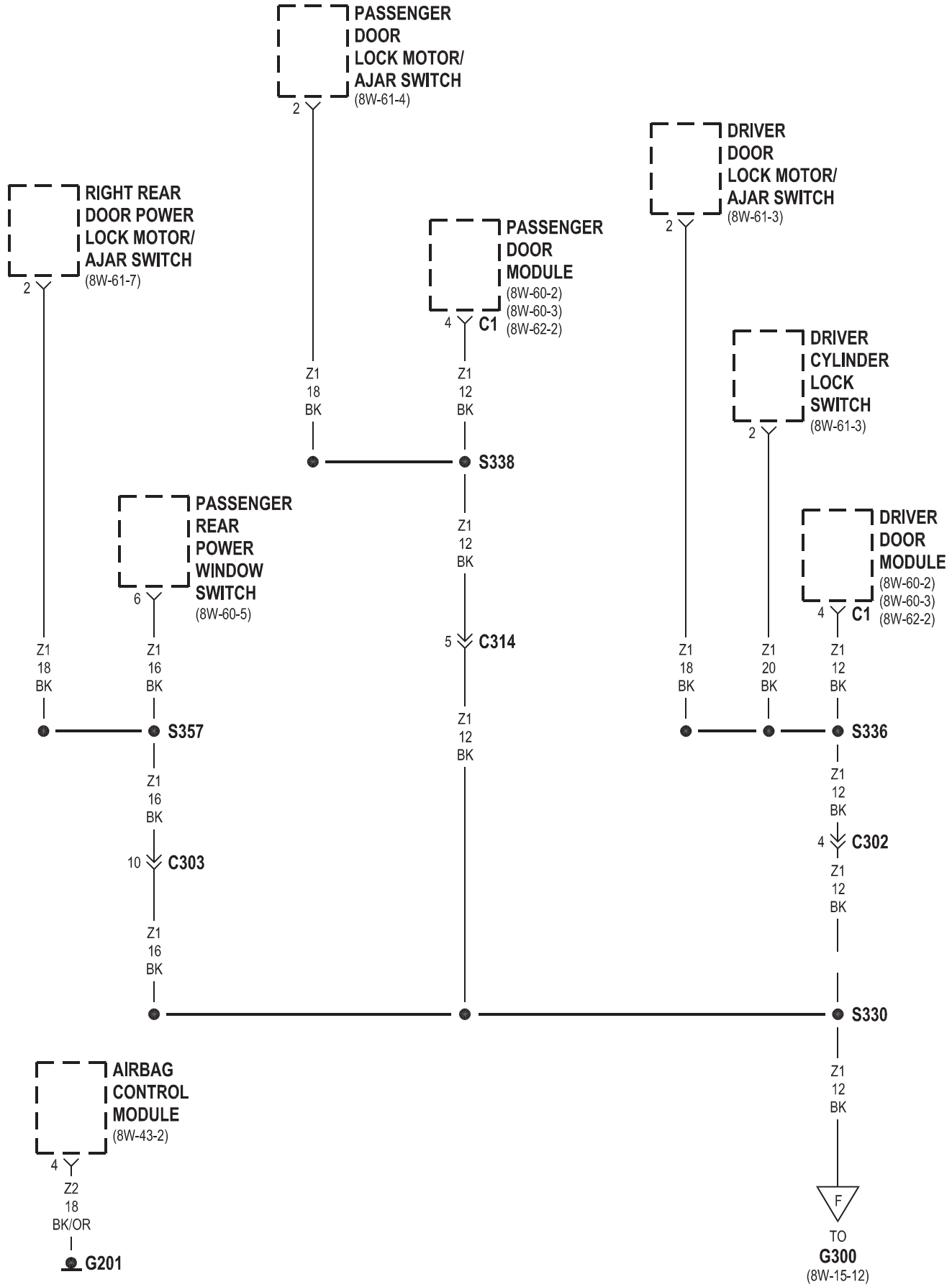
PASSENGER DOOR LOCK MOTOR/ AJAR SWITCH (8W-61-4)
2
DRIVER DOOR LOCK MOTOR/ AJAR SWITCH (8W-61-3)
2
RIGHT REAR DOOR POWER LOCK MOTOR/ AJAR SWITCH (8W-61-7)
2
PASSENGER DOOR MODULE (8W-60-2) (8W-60-3) (8W-62-2)
4 C1
DRIVER CYLINDER LOCK SWITCH (8W-61-3)
2
Z1 18 BK
Z1 12 BK
S338
PASSENGER REAR POWER WINDOW SWITCH (8W-60-5)
6
Z1 12 BK
DRIVER DOOR MODULE (8W-60-2) (8W-60-3) (8W-62-2)
4 C1
5 C314
Z1 18 BK
Z1 16 BK
Z1 18 BK
Z1 20 BK
Z1 12 BK
S357
Z1 12 BK
S336
Z1 16 BK
Z1 12 BK
10 C303
4 C302
Z1 12 BK
Z1 16 BK
S330
AIRBAG CONTROL MODULE (8W-43-2)
4
Z1 12 BK
Z2 18 BK/OR
G201
F
TO G300 (8W-15-12)

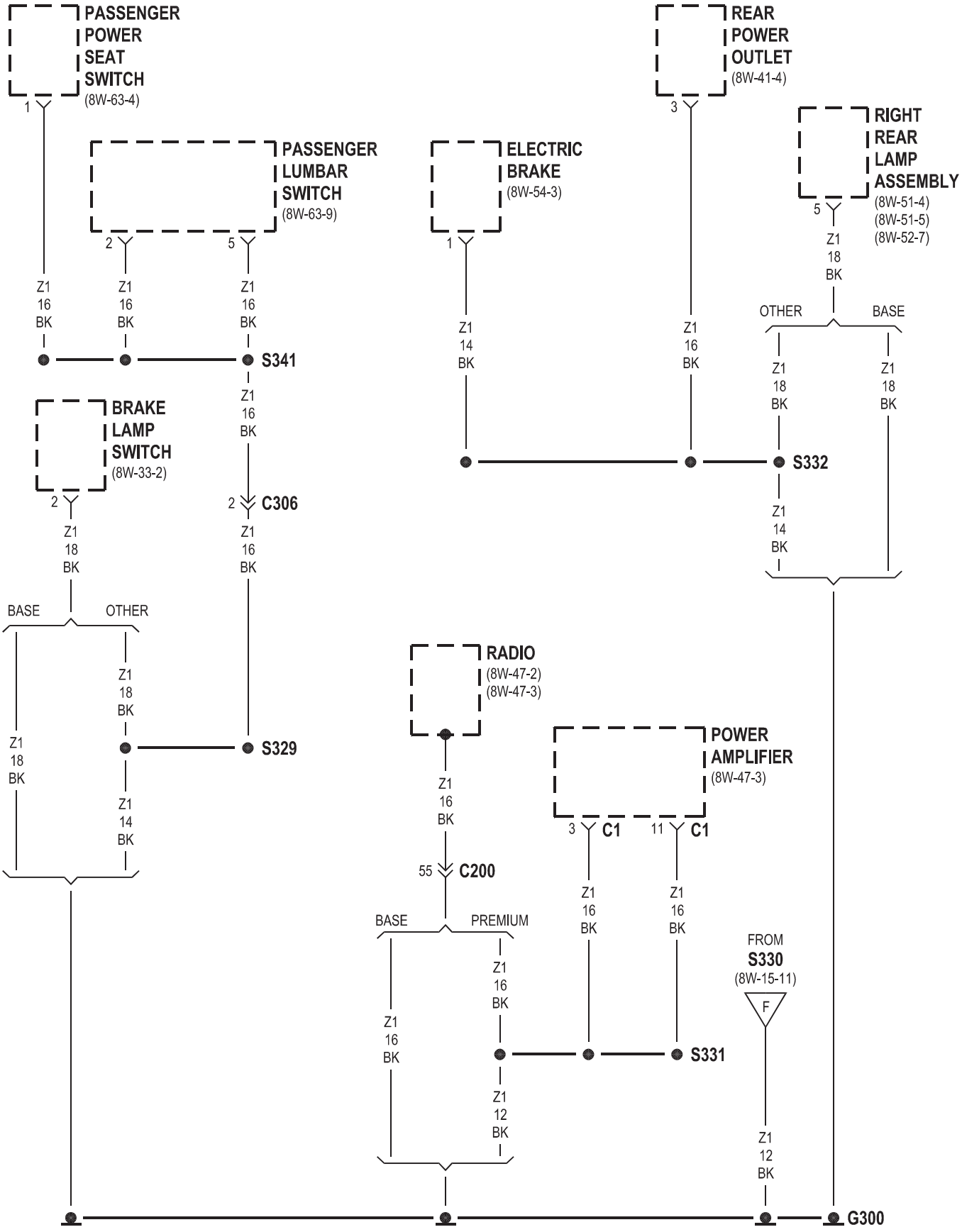
PASSENGER POWER SEAT SWITCH (8W-63-4)
1
PASSENGER LUMBAR SWITCH (8W-63-9)
2
5
Z1 16 BK
Z1 16 BK
Z1 16 BK
S341
Z1 16 BK
BRAKE LAMP SWITCH (8W-33-2)
2
2
C306
Z1 18 BK
Z1 16 BK
BASE
OTHER
Z1 18 BK
Z1 18 BK
Z1 14 BK
S329
ELECTRIC BRAKE (8W-54-3)
1
Z1 14 BK
REAR POWER OUTLET (8W-41-4)
3
Z1 16 BK
RIGHT REAR LAMP ASSEMBLY (8W-51-4) (8W-51-5) (8W-52-7)
5
Z1 18 BK
OTHER
BASE
Z1 18 BK
Z1 18 BK
S332
Z1 14 BK
RADIO (8W-47-2) (8W-47-3)
Z1 16 BK
55
C200
BASE
PREMIUM
Z1 16 BK
Z1 16 BK
Z1 12 BK
POWER AMPLIFIER (8W-47-3)
3
C1
11
C1
Z1 16 BK
Z1 16 BK
S331
FROM S330 (8W-15-11)
F
Z1 12 BK
G300

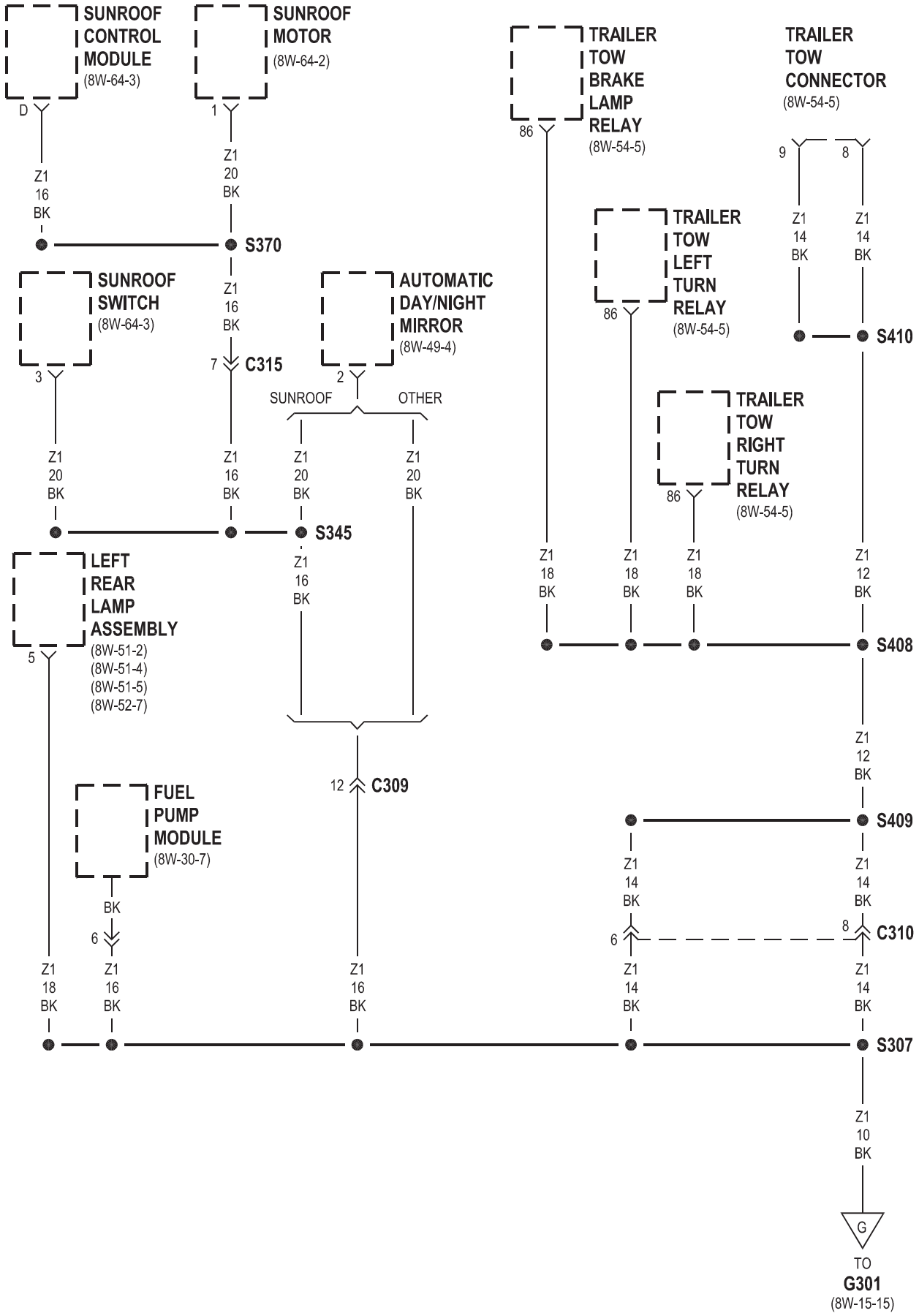
SUNROOF CONTROL MODULE (8W-64-3)
SUNROOF MOTOR (8W-64-2)
TRAILER TOW BRAKE LAMP RELAY (8W-54-5)
TRAILER TOW CONNECTOR (8W-54-5)
D
1
86
9
8
Z1 16 BK
Z1 20 BK
Z1 14 BK
S370
TRAILER TOW LEFT TURN RELAY (8W-54-5)
SUNROOF SWITCH (8W-64-3)
AUTOMATIC DAY/NIGHT MIRROR (8W-49-4)
S410
3
7
C315
2
SUNROOF
OTHER
TRAILER TOW RIGHT TURN RELAY (8W-54-5)
Z1 18 BK
Z1 12 BK
S345
S408
LEFT REAR LAMP ASSEMBLY (8W-51-2) (8W-51-4) (8W-51-5) (8W-52-7)
5
12
C309
FUEL PUMP MODULE (8W-30-7)
S409
BK
6
8
C310
S307
Z1 10 BK
G
TO
G301
(8W-15-15)

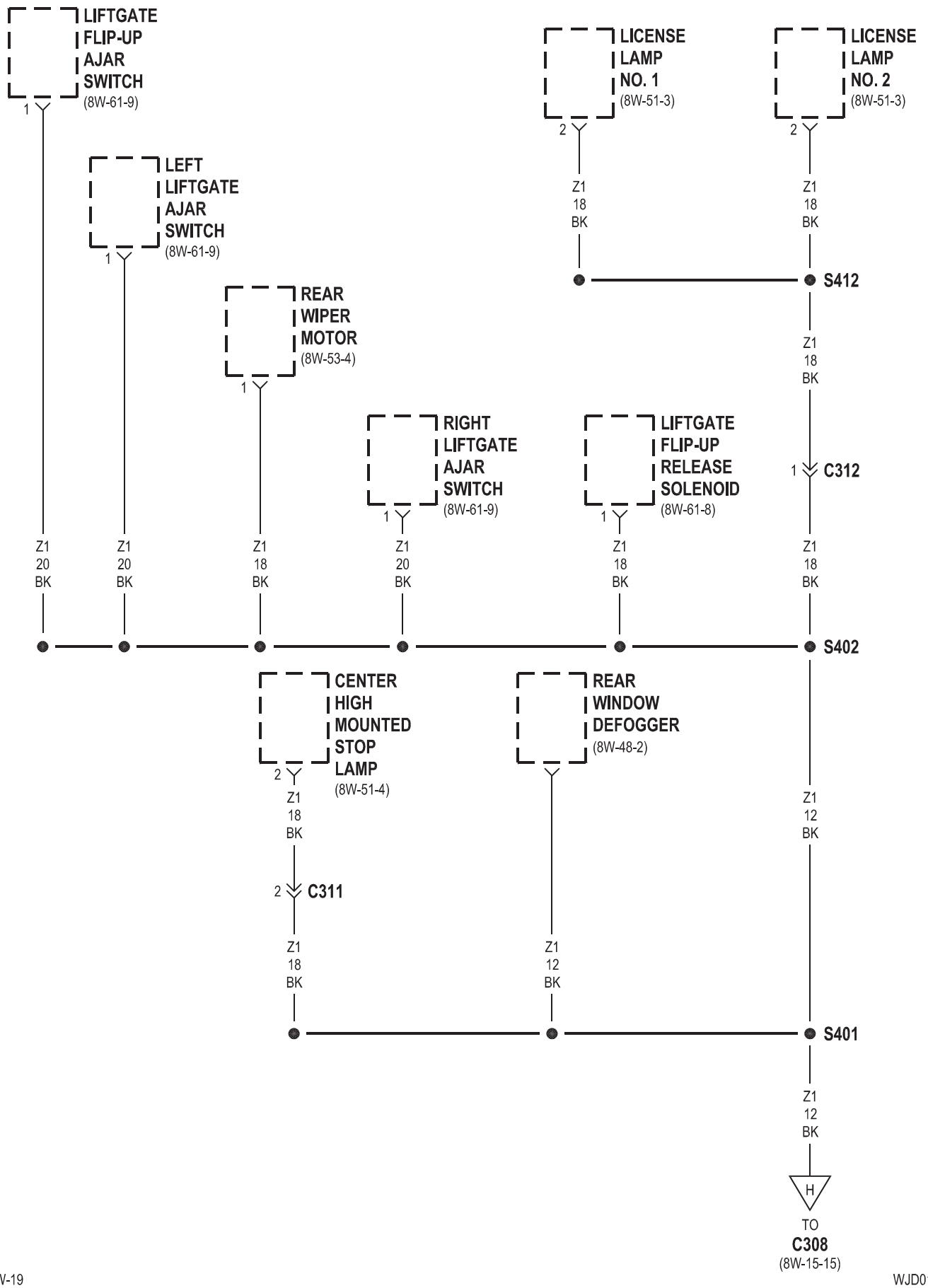
LIFTGATE FLIP-UP AJAR SWITCH (8W-61-9)
1
LEFT LIFTGATE AJAR SWITCH (8W-61-9)
1
REAR WIPER MOTOR (8W-53-4)
1
RIGHT LIFTGATE AJAR SWITCH (8W-61-9)
1
LIFTGATE FLIP-UP RELEASE SOLENOID (8W-61-8)
1
LICENSE LAMP NO. 1 (8W-51-3)
2
LICENSE LAMP NO. 2 (8W-51-3)
2
Z1 18 BK
Z1 18 BK
S412
Z1 18 BK
1 C312
Z1 20 BK
Z1 20 BK
Z1 18 BK
Z1 20 BK
Z1 18 BK
Z1 18 BK
S402
CENTER HIGH MOUNTED STOP LAMP (8W-51-4)
2
REAR WINDOW DEFOGGER (8W-48-2)
Z1 18 BK
2 C311
Z1 18 BK
Z1 12 BK
Z1 12 BK
S401
Z1 12 BK
H
TO
C308
(8W-15-15)

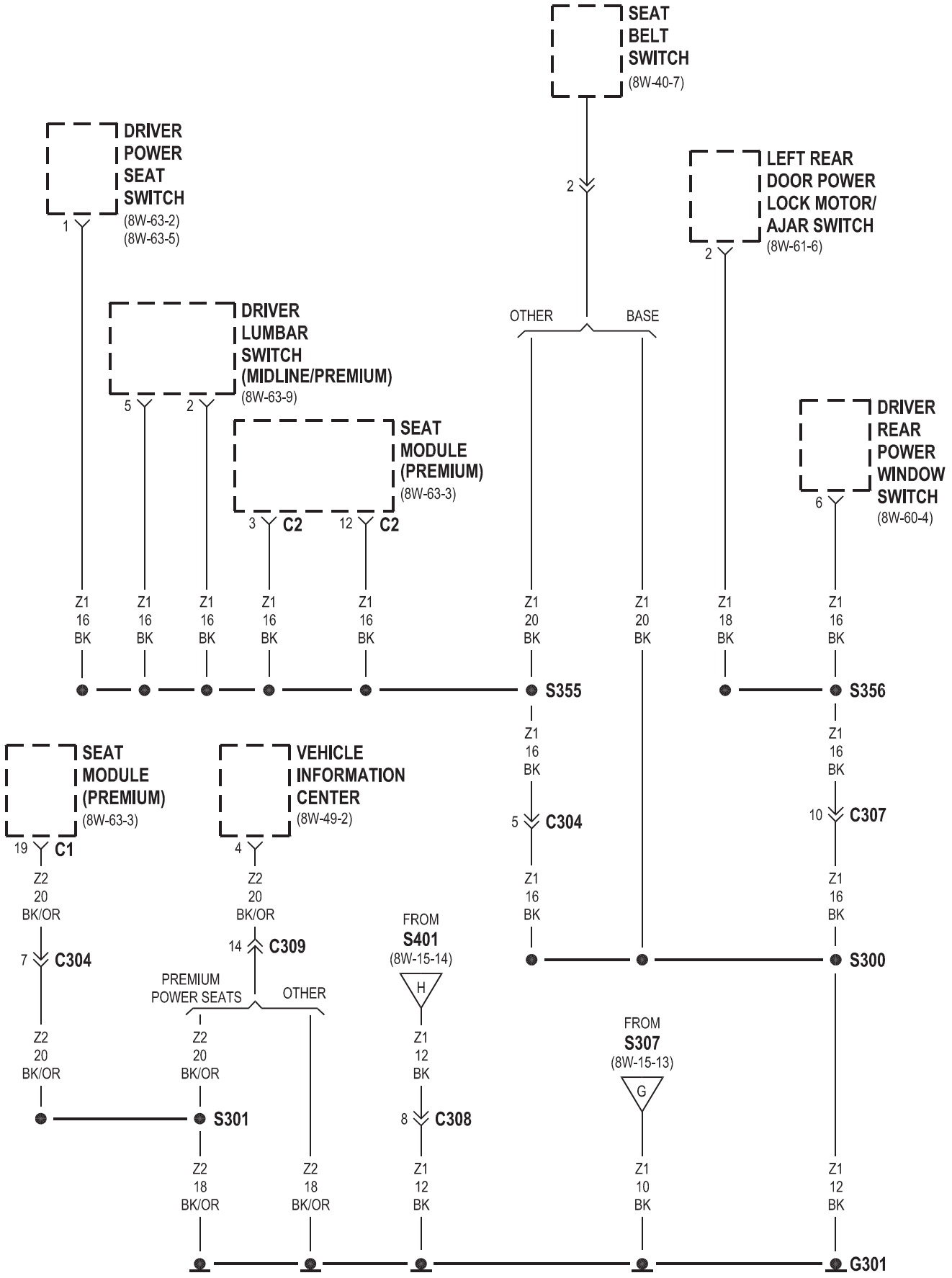
SEAT BELT SWITCH (8W-40-7)
DRIVER POWER SEAT SWITCH (8W-63-2) (8W-63-5)
LEFT REAR DOOR POWER LOCK MOTOR/ AJAR SWITCH (8W-61-6)
DRIVER LUMBAR SWITCH (MIDLINE/PREMIUM) (8W-63-9)
SEAT MODULE (PREMIUM) (8W-63-3)
DRIVER REAR POWER WINDOW SWITCH (8W-60-4)
OTHER
BASE
Z1 16 BK
Z1 20 BK
Z1 18 BK
S355
S356
C2
SEAT MODULE (PREMIUM) (8W-63-3)
VEHICLE INFORMATION CENTER (8W-49-2)
C1
C304
C307
Z2 20 BK/OR
C309
S300
FROM S401 (8W-15-14)
PREMIUM POWER SEATS
Z1 12 BK
C308
FROM S307 (8W-15-13)
S301
Z2 18 BK/OR
Z1 10 BK
G301

8W-18 BUS COMMUNICATIONS

Component	Page
Airbag Control Module	8W-18-4
Automatic Zone Control Module	8W-18-4
Body Control Module	8W-18-4, 5
Compact Disc Changer	8W-18-2
Controller Antilock Brake	8W-18-3
Data Link Connector	8W-18-4, 5
Diagnostic Junction Port	8W-18-4, 5
Driver Door Module	8W-18-3
Fuse 17 (JB)	8W-18-5
G103	8W-18-5
Instrument Cluster	8W-18-4
Junction Block	8W-18-5
Passenger Door Module	8W-18-2
Powertrain Control Module	8W-18-2, 5
Radio	8W-18-4
Seat Module	8W-18-3
Sentry Key Immobilizer Module	8W-18-4
Transmission Control Module	8W-18-2, 5
Vehicle Information Center	8W-18-3

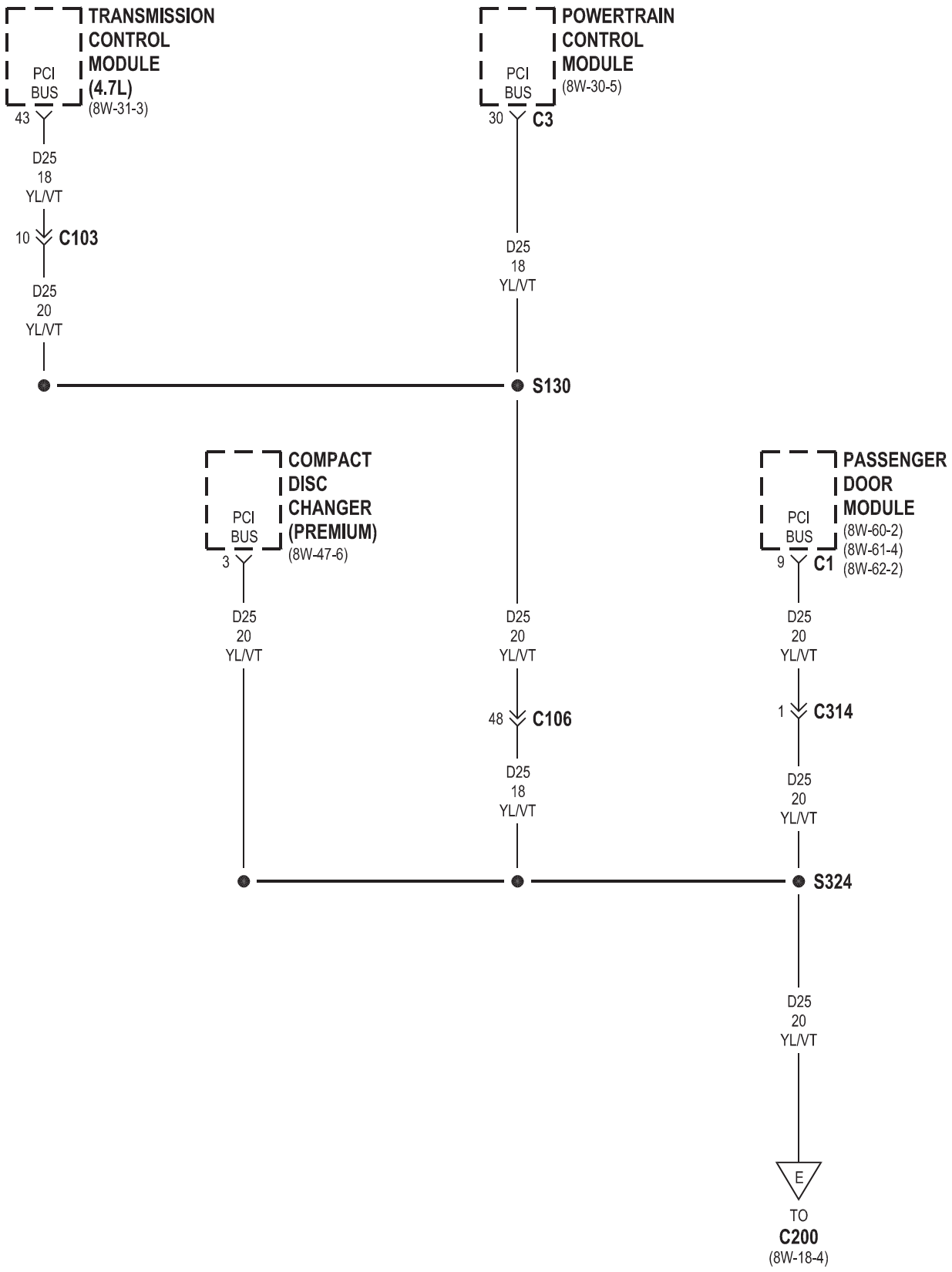
TRANSMISSION CONTROL MODULE (4.7L)
(8W-31-3)
PCI BUS
43
D25 18 YL/VT
10
C103
D25 20 YL/VT
POWERTRAIN CONTROL MODULE
(8W-30-5)
PCI BUS
30
C3
D25 18 YL/VT
S130
COMPACT DISC CHANGER (PREMIUM)
(8W-47-6)
PCI BUS
3
D25 20 YL/VT
D25 20 YL/VT
48
C106
D25 18 YL/VT
PASSENGER DOOR MODULE
(8W-60-2)
(8W-61-4)
(8W-62-2)
PCI BUS
9
C1
D25 20 YL/VT
1
C314
D25 20 YL/VT
S324
D25 20 YL/VT
E
TO
C200
(8W-18-4)

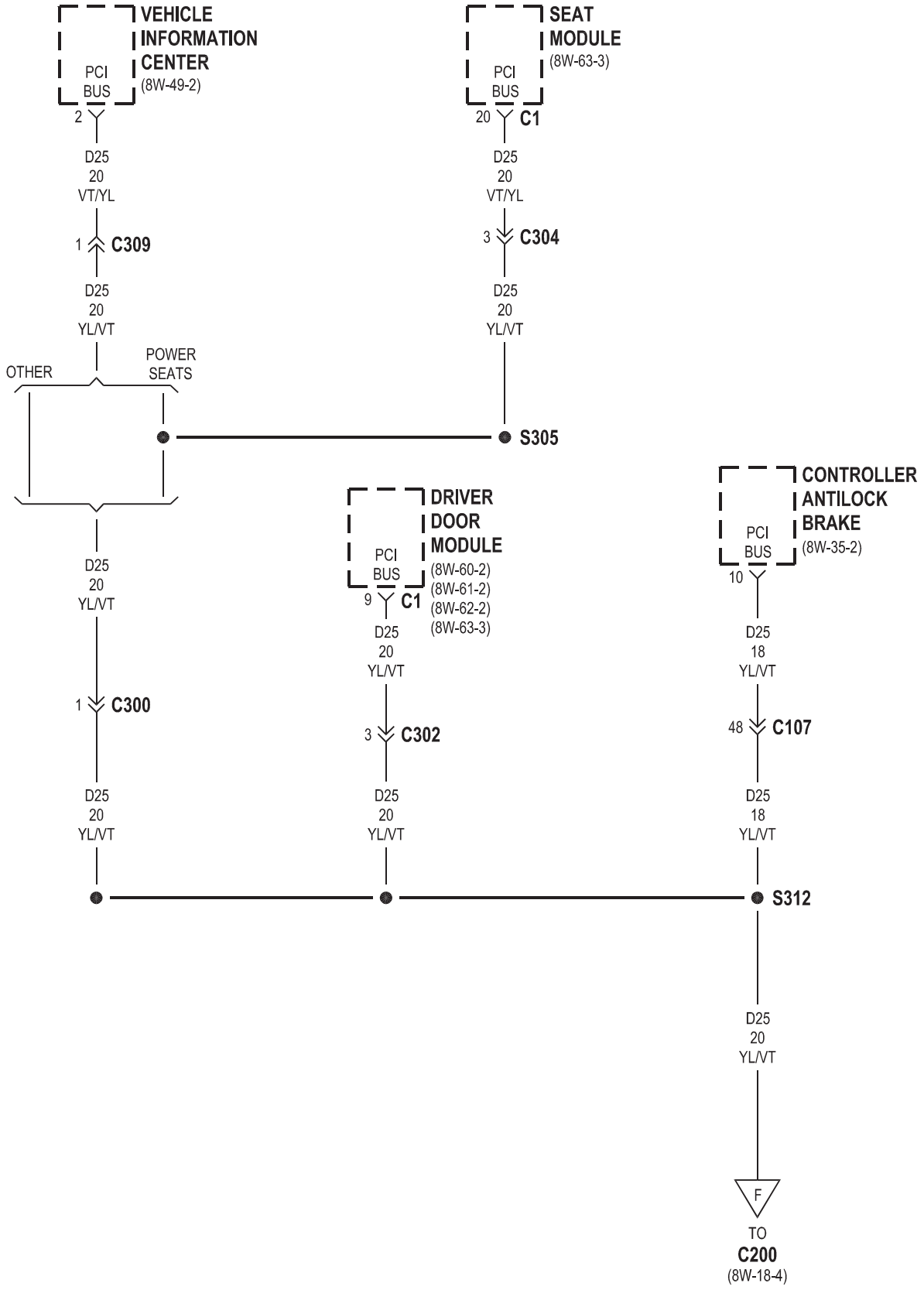
VEHICLE INFORMATION CENTER
(8W-49-2)
PCI BUS
2
D25 20 VT/YL
1 C309
D25 20 YL/VT
OTHER
POWER SEATS
SEAT MODULE
(8W-63-3)
PCI BUS
20 C1
D25 20 VT/YL
3 C304
D25 20 YL/VT
S305
D25 20 YL/VT
1 C300
D25 20 YL/VT
DRIVER DOOR MODULE
(8W-60-2)
(8W-61-2)
(8W-62-2)
(8W-63-3)
PCI BUS
9 C1
D25 20 YL/VT
3 C302
D25 20 YL/VT
CONTROLLER ANTILOCK BRAKE
(8W-35-2)
PCI BUS
10
D25 18 YL/VT
48 C107
D25 18 YL/VT
S312
D25 20 YL/VT
F
TO
C200
(8W-18-4)

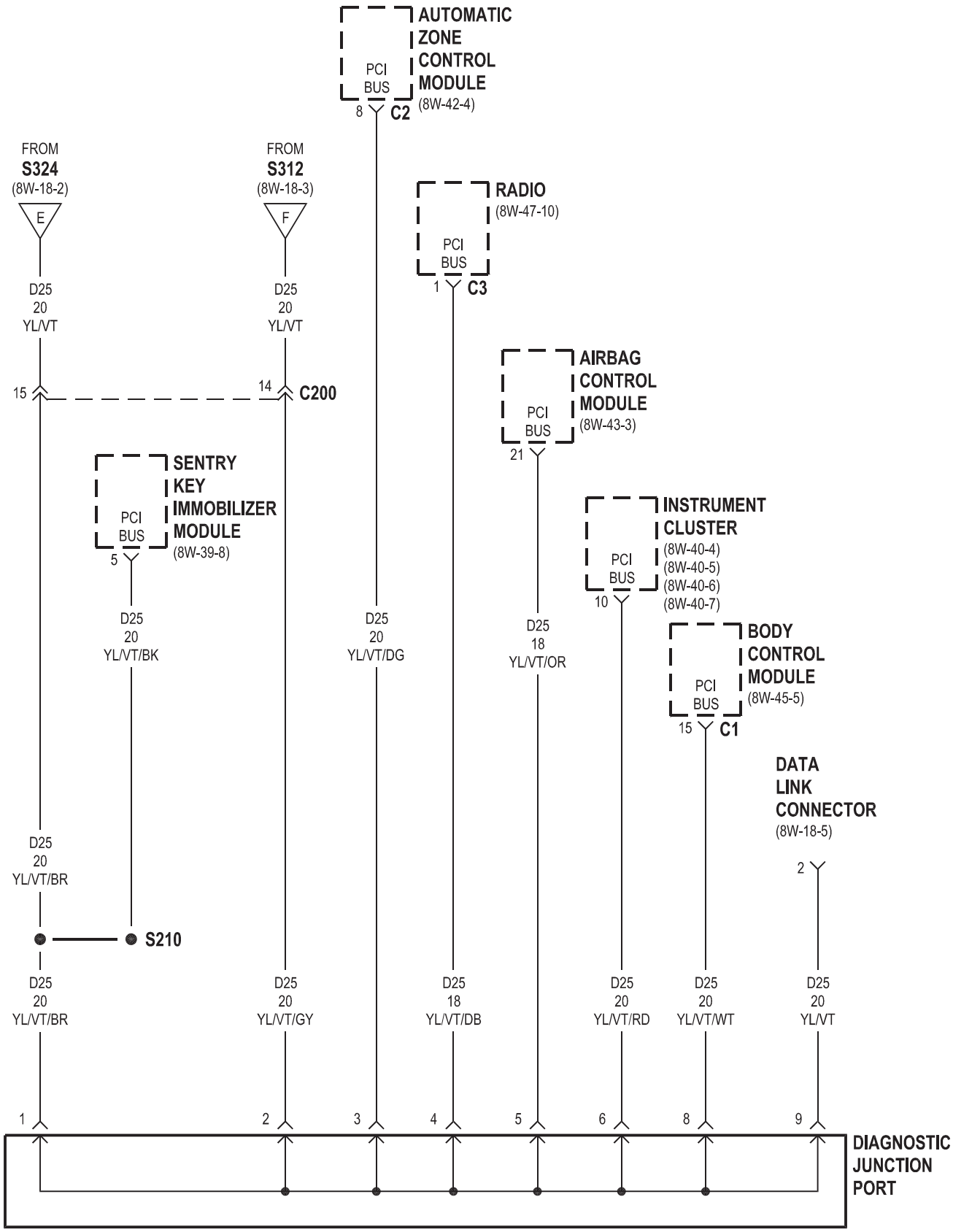
AUTOMATIC ZONE CONTROL MODULE
(8W-42-4)
PCI BUS
8
C2
FROM S324 (8W-18-2)
E
FROM S312 (8W-18-3)
F
RADIO
(8W-47-10)
PCI BUS
1
C3
D25 20 YL/VT
D25 20 YL/VT
15
14
C200
AIRBAG CONTROL MODULE
(8W-43-3)
PCI BUS
21
SENTRY KEY IMMOBILIZER MODULE
(8W-39-8)
PCI BUS
5
INSTRUMENT CLUSTER
(8W-40-4)
(8W-40-5)
(8W-40-6)
(8W-40-7)
PCI BUS
10
D25 20 YL/VT/BK
D25 20 YL/VT/DG
D25 18 YL/VT/OR
BODY CONTROL MODULE
(8W-45-5)
PCI BUS
15
C1
DATA LINK CONNECTOR
(8W-18-5)
2
D25 20 YL/VT/BR
S210
D25 20 YL/VT/BR
D25 20 YL/VT/GY
D25 18 YL/VT/DB
D25 20 YL/VT/RD
D25 20 YL/VT/WT
D25 20 YL/VT
1
2
3
4
5
6
8
9
DIAGNOSTIC JUNCTION PORT

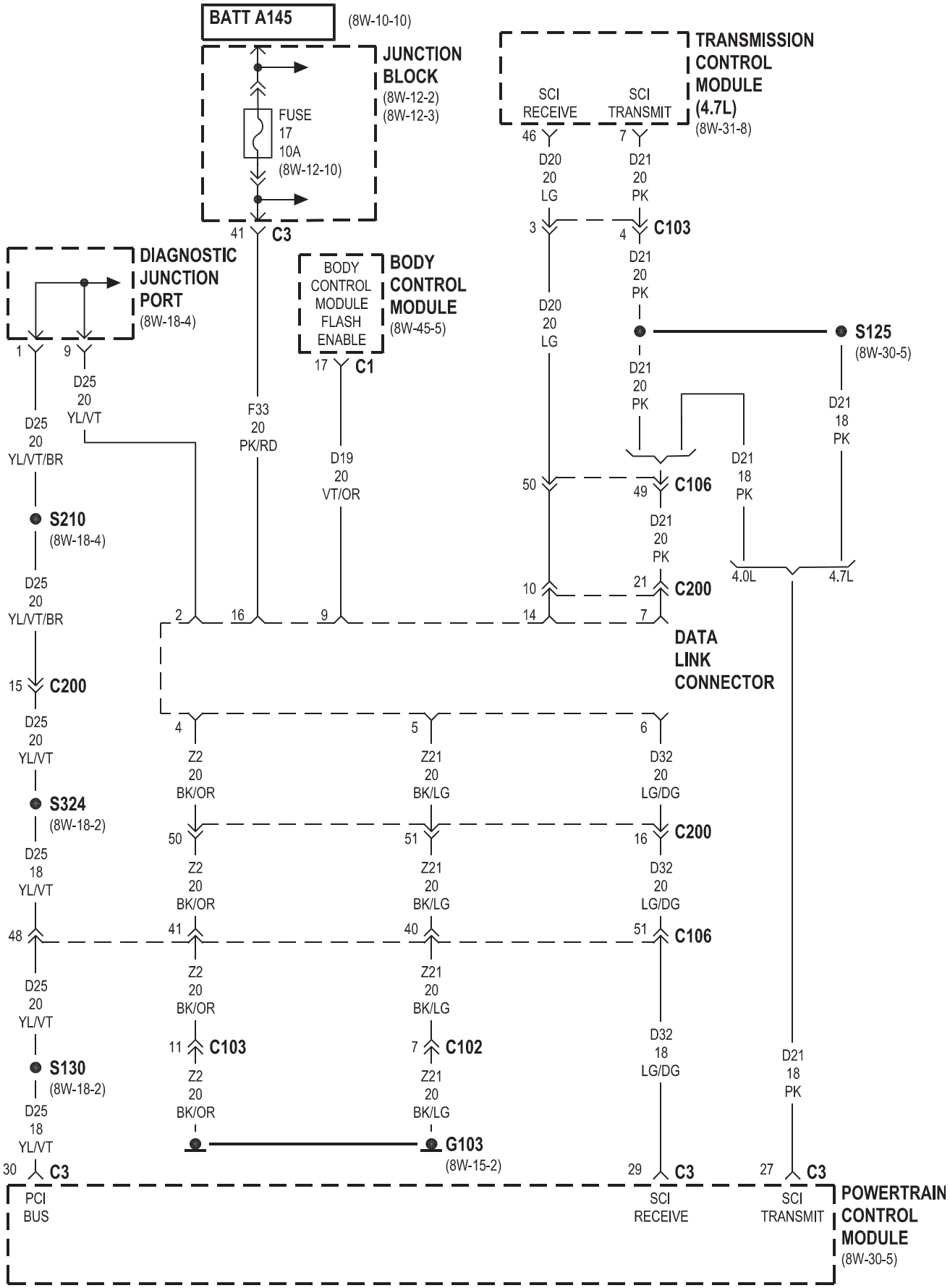
BATT A145
(8W-10-10)
JUNCTION BLOCK
(8W-12-2)
(8W-12-3)
FUSE 17 10A
(8W-12-10)
41 C3
TRANSMISSION CONTROL MODULE (4.7L)
(8W-31-8)
SCI RECEIVE
SCI TRANSMIT
46
7
D20 20 LG
D21 20 PK
3
4 C103
D21 20 PK
D20 20 LG
S125
(8W-30-5)
D21 20 PK
D21 18 PK
DIAGNOSTIC JUNCTION PORT
(8W-18-4)
1
9
D25 20 YL/VT
D25 20 YL/VT/BR
BODY CONTROL MODULE FLASH ENABLE
BODY CONTROL MODULE
(8W-45-5)
17 C1
F33 20 PK/RD
D19 20 VT/OR
50
49 C106
D21 18 PK
S210
(8W-18-4)
D21 20 PK
4.0L
4.7L
D25 20 YL/VT/BR
10
21 C200
2
16
9
14
7
DATA LINK CONNECTOR
15 C200
D25 20 YL/VT
4
5
6
Z2 20 BK/OR
Z21 20 BK/LG
D32 20 LG/DG
S324
(8W-18-2)
50
51
16 C200
D25 18 YL/VT
Z2 20 BK/OR
Z21 20 BK/LG
D32 20 LG/DG
48
41
40
51 C106
D25 20 YL/VT
Z2 20 BK/OR
Z21 20 BK/LG
11 C103
7 C102
D32 18 LG/DG
D21 18 PK
S130
(8W-18-2)
Z2 20 BK/OR
Z21 20 BK/LG
D25 18 YL/VT
G103
(8W-15-2)
30 C3
29 C3
27 C3
PCI BUS
SCI RECEIVE
SCI TRANSMIT
POWERTRAIN CONTROL MODULE
(8W-30-5)

8W-20 CHARGING SYSTEM

Component	Page
Automatic Shut Down Relay	8W-20-2
Battery	8W-20-2
Battery Temperature Sensor	8W-20-2
Engine Starter Motor	8W-20-2
Fuse 6 (PDC)	8W-20-2
Fuse 19 (PDC)	8W-20-2
Fuse 26 (PDC)	8W-20-2
Fusible Link	8W-20-2
G100	8W-20-2
G101	8W-20-2
Generator	8W-20-2
Power Distribution Center	8W-20-2
Powertrain Control Module	8W-20-2

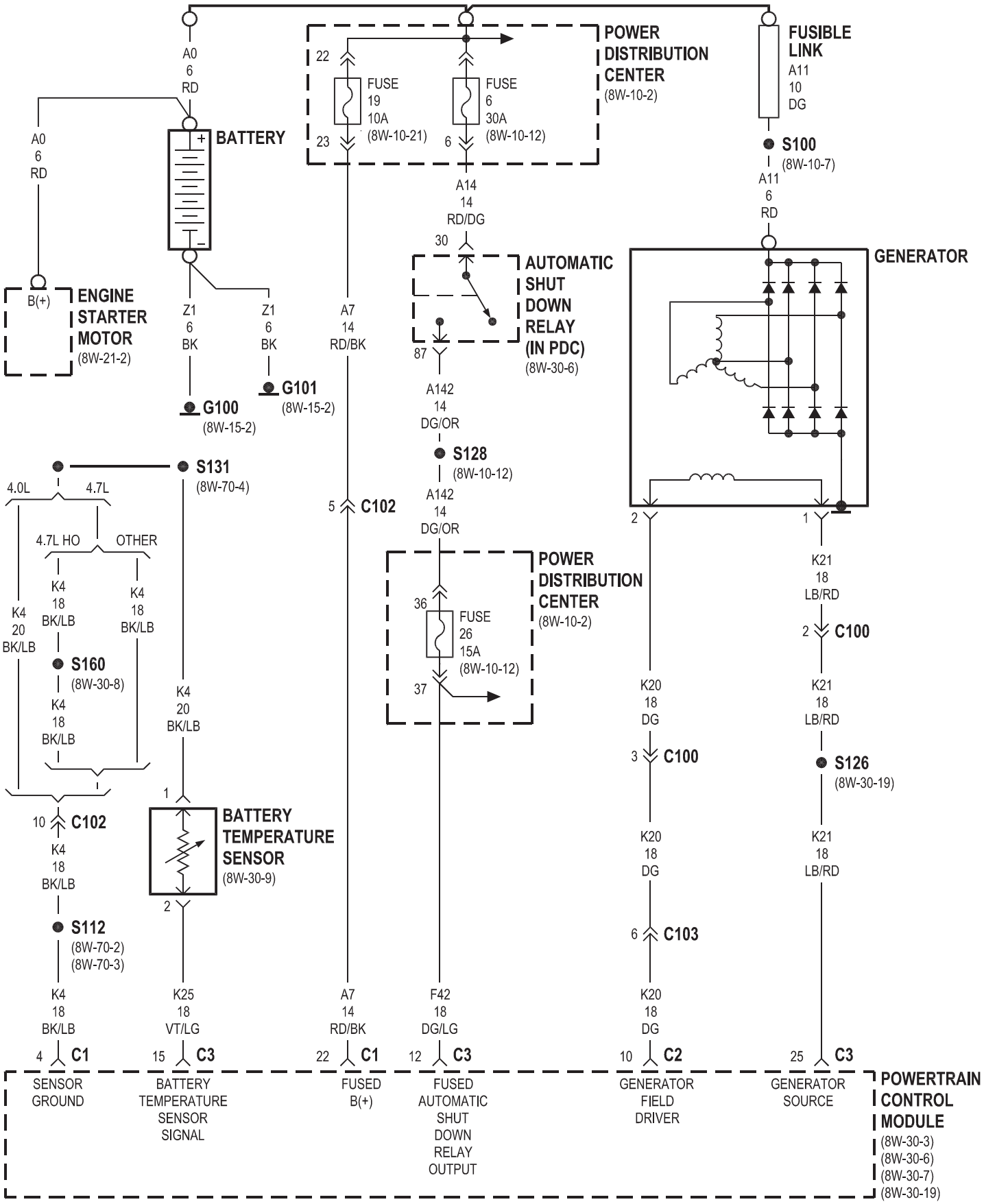
A0
6
RD
BATTERY
POWER DISTRIBUTION CENTER
(8W-10-2)
22
FUSE
19
10A
(8W-10-21)
23
FUSE
6
30A
(8W-10-12)
6
FUSIBLE LINK
A11
10
DG
S100
(8W-10-7)
A11
6
RD
A14
14
RD/DG
30
AUTOMATIC SHUT DOWN RELAY (IN PDC)
(8W-30-6)
87
GENERATOR
B(+)
ENGINE STARTER MOTOR
(8W-21-2)
Z1
6
BK
G100
(8W-15-2)
G101
(8W-15-2)
A7
14
RD/BK
A142
14
DG/OR
S128
(8W-10-12)
S131
(8W-70-4)
4.0L
4.7L
4.7L HO
OTHER
K4
18
BK/LB
K4
20
BK/LB
S160
(8W-30-8)
C102
5
POWER DISTRIBUTION CENTER
(8W-10-2)
36
FUSE
26
15A
(8W-10-12)
37
2
1
K21
18
LB/RD
C100
K20
18
DG
C103
S126
(8W-30-19)
10
BATTERY TEMPERATURE SENSOR
(8W-30-9)
S112
(8W-70-2)
(8W-70-3)
K25
18
VT/LG
F42
18
DG/LG
4
C1
15
C3
22
C1
12
C3
10
C2
25
C3
SENSOR GROUND
BATTERY TEMPERATURE SENSOR SIGNAL
FUSED B(+)
FUSED AUTOMATIC SHUT DOWN RELAY OUTPUT
GENERATOR FIELD DRIVER
GENERATOR SOURCE
POWERTRAIN CONTROL MODULE
(8W-30-3)
(8W-30-6)
(8W-30-7)
(8W-30-19)

8W-21 STARTING SYSTEM

Component	Page
Battery	8W-21-2
Engine Starter Motor	8W-21-2
Engine Starter Motor Relay	8W-21-2
Fuse 8 (PDC)	8W-21-2
Fuse 31 (JB)	8W-21-2
Ignition Switch	8W-21-2
Junction Block	8W-21-2
Park/Neutral Position Switch	8W-21-2
Power Distribution Center	8W-21-2
Powertrain Control Module	8W-21-2
Transmission Control Module	8W-21-2
Transmission Solenoid/TRS Assembly	8W-21-2

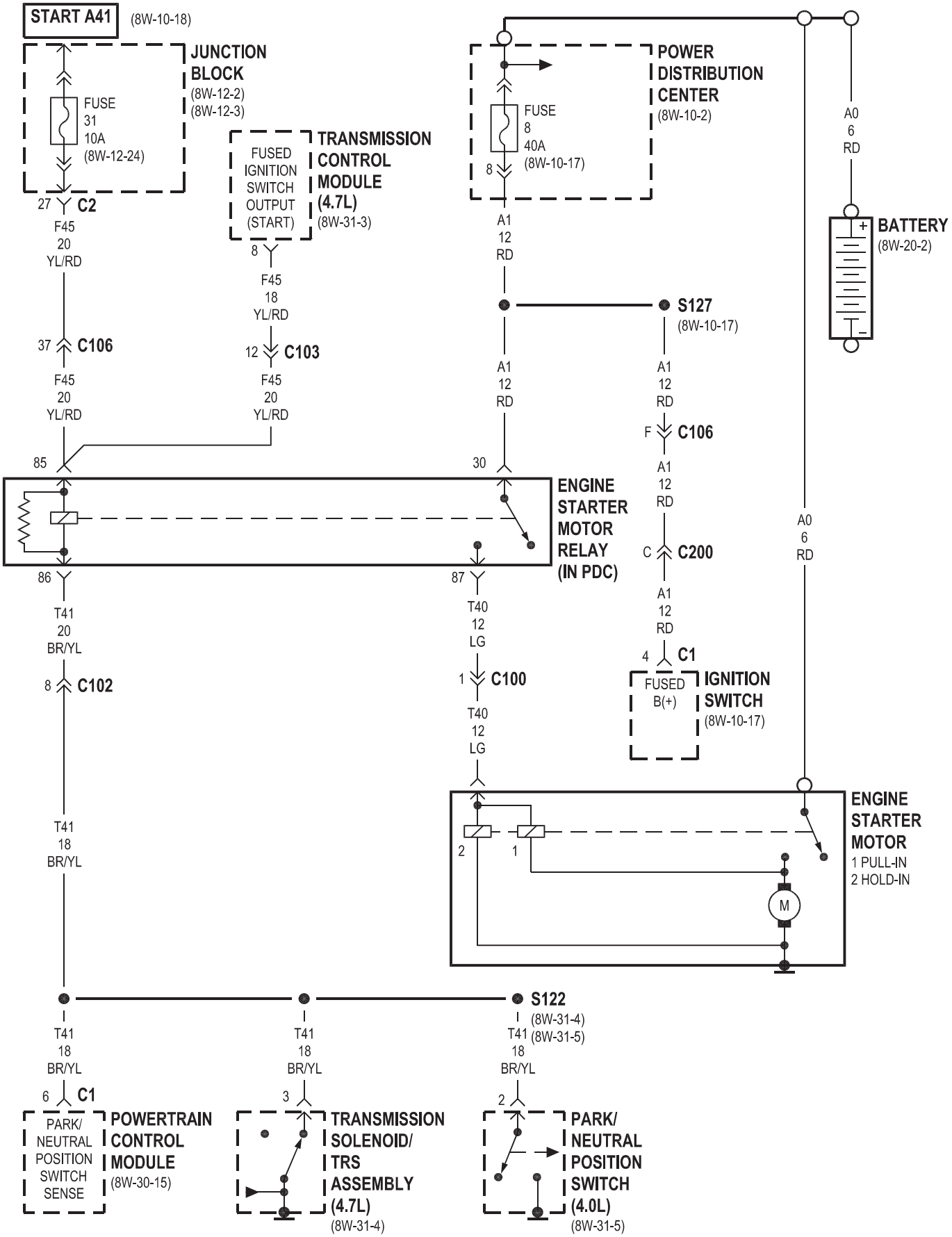
START A41
(8W-10-18)
JUNCTION BLOCK
(8W-12-2)
(8W-12-3)
FUSE 31 10A
(8W-12-24)
27
C2
F45 20 YL/RD
37
C106
F45 20 YL/RD
TRANSMISSION CONTROL MODULE (4.7L)
(8W-31-3)
FUSED IGNITION SWITCH OUTPUT (START)
8
F45 18 YL/RD
12
C103
F45 20 YL/RD
POWER DISTRIBUTION CENTER
(8W-10-2)
FUSE 8 40A
(8W-10-17)
8
A1 12 RD
S127
(8W-10-17)
A1 12 RD
F
C106
A1 12 RD
C
C200
A1 12 RD
4
C1
FUSED B(+)
IGNITION SWITCH
(8W-10-17)
A0 6 RD
BATTERY
(8W-20-2)
85
30
ENGINE STARTER MOTOR RELAY (IN PDC)
86
87
T41 20 BR/YL
8
C102
T40 12 LG
1
C100
T40 12 LG
ENGINE STARTER MOTOR
1 PULL-IN
2 HOLD-IN
2
1
M
T41 18 BR/YL
S122
(8W-31-4)
(8W-31-5)
T41 18 BR/YL
6
C1
PARK/ NEUTRAL POSITION SWITCH SENSE
POWERTRAIN CONTROL MODULE
(8W-30-15)
3
TRANSMISSION SOLENOID/ TRS ASSEMBLY (4.7L)
(8W-31-4)
2
PARK/ NEUTRAL POSITION SWITCH (4.0L)
(8W-31-5)

8W-30 FUEL/IGNITION SYSTEM

Component	Page
A/C Compressor Clutch Relay	8W-30-19
A/C High Pressure Switch	8W-30-19
A/C Low Pressure Switch	8W-30-19
A/C Pressure Transducer	8W-30-25
Automatic Shut Down Relay	8W-30-6, 9, 20, 21, 22, 23, 24
Battery Temperature Sensor	8W-30-8, 9
Brake Lamp Switch	8W-30-4, 26
Brake Transmission Shift Interlock Solenoid	8W-30-26
Camshaft Position Sensor	8W-30-15, 16
Capacitor	8W-30-9
Capacitor No. 1	8W-30-13
Capacitor No. 2	8W-30-14
Clockspring	8W-30-4
Coil On Plug No. 1	8W-30-14
Coil On Plug No. 2	8W-30-13
Coil On Plug No. 3	8W-30-14
Coil On Plug No. 4	8W-30-13
Coil On Plug No. 5	8W-30-14
Coil On Plug No. 6	8W-30-13
Coil On Plug No. 7	8W-30-14
Coil On Plug No. 8	8W-30-13
Coil Rail	8W-30-9
Controller Antilock Brake	8W-30-2
Crankshaft Position Sensor	8W-30-15, 16
Data Link Connector	8W-30-5
Diagnostic Junction Port	8W-30-5
Electronic Speed Control Servo	8W-30-4
Engine Coolant Temperature Sensor	8W-30-17, 18
Engine Oil Pressure Sensor	8W-30-17, 18
Engine Starter Motor Relay	8W-30-15
Evap/Purge Solenoid	8W-30-4
Fuel Injector No. 1	8W-30-10, 12
Fuel Injector No. 2	8W-30-10, 11
Fuel Injector No. 3	8W-30-10, 12
Fuel Injector No. 4	8W-30-10, 11
Fuel Injector No. 5	8W-30-10, 12
Fuel Injector No. 6	8W-30-10, 11
Fuel Injector No. 7	8W-30-12
Fuel Injector No. 8	8W-30-11
Fuel Pump Module	8W-30-7
Fuel Pump Relay	8W-30-6, 7
Fuse 6 (PDC)	8W-30-6
Fuse 16 (PDC)	8W-30-6, 20, 21, 22, 23, 24
Fuse 19 (PDC)	8W-30-7
Fuse 24 (PDC)	8W-30-7
Fuse 26 (PDC)	8W-30-6, 9
Fuse 12 (JB)	8W-30-6, 7
Fuse 21 (JB)	8W-30-4, 26
G103	8W-30-6
G104	8W-30-21, 22, 24
G108	8W-30-19
G300	8W-30-4
G301	8W-30-7
Generator	8W-30-3, 19
Hydraulic Cooling Module	8W-30-3, 25
Idle Air Control Motor	8W-30-16
Instrument Cluster	8W-30-2
Intake Air Temperature Sensor	8W-30-17, 18
Junction Block	8W-30-2, 4, 6, 7, 26
Knock Sensor	8W-30-8
Leak Detection Pump	8W-30-19
Manifold Absolute Pressure Sensor	8W-30-16, 17, 18
Output Speed Sensor	8W-30-2
Overdrive Switch	8W-30-26
Oxygen Sensor 1/1 Upstream	8W-30-6, 21, 23
Oxygen Sensor 1/2 Downstream	8W-30-20, 21, 24
Oxygen Sensor 2/1 Upstream	8W-30-6, 22, 23
Oxygen Sensor 2/2 Downstream	8W-30-20, 22, 24
Oxygen Sensor Downstream Relay	8W-30-20, 21, 22, 24
Power Distribution Center	8W-30-6, 7, 9, 20, 21, 22, 23, 24
Powertrain Control Module	8W-30-2, 3, 4, 5, 6, 7, 8, 9, 10, 11, 12, 13, 14, 15, 16, 17, 18, 19, 20, 21, 22, 23, 24, 25, 26
Radiator Fan Relay	8W-30-3
Speed Control Switch No. 1	8W-30-4
Speed Control Switch No. 2	8W-30-4
Throttle Position Sensor	8W-30-16
Transmission Control Module	8W-30-2, 5, 16, 19, 26
Transmission Control Relay	8W-30-19
Transmission Solenoid	8W-30-3, 17

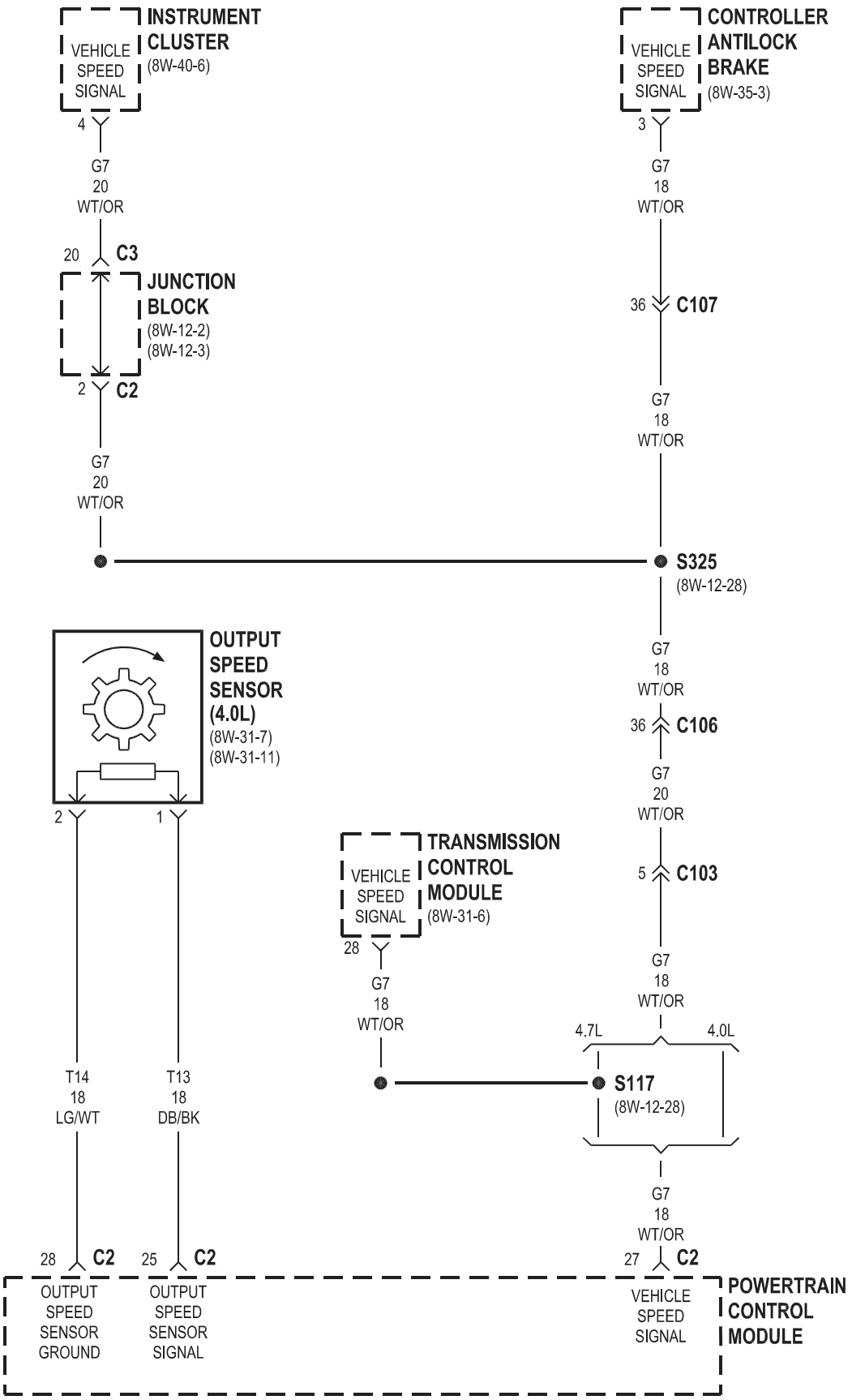
INSTRUMENT CLUSTER
(8W-40-6)
VEHICLE SPEED SIGNAL
4
G7
20
WT/OR
20
C3
JUNCTION BLOCK
(8W-12-2)
(8W-12-3)
2
C2
G7
20
WT/OR
CONTROLLER ANTILOCK BRAKE
(8W-35-3)
VEHICLE SPEED SIGNAL
3
G7
18
WT/OR
36
C107
G7
18
WT/OR
S325
(8W-12-28)
G7
18
WT/OR
36
C106
G7
20
WT/OR
5
C103
G7
18
WT/OR
OUTPUT SPEED SENSOR (4.0L)
(8W-31-7)
(8W-31-11)
2
1
TRANSMISSION CONTROL MODULE
(8W-31-6)
VEHICLE SPEED SIGNAL
28
G7
18
WT/OR
4.7L
4.0L
S117
(8W-12-28)
G7
18
WT/OR
T14
18
LG/WT
T13
18
DB/BK
28
C2
25
C2
27
C2
OUTPUT SPEED SENSOR GROUND
OUTPUT SPEED SENSOR SIGNAL
VEHICLE SPEED SIGNAL
POWERTRAIN CONTROL MODULE

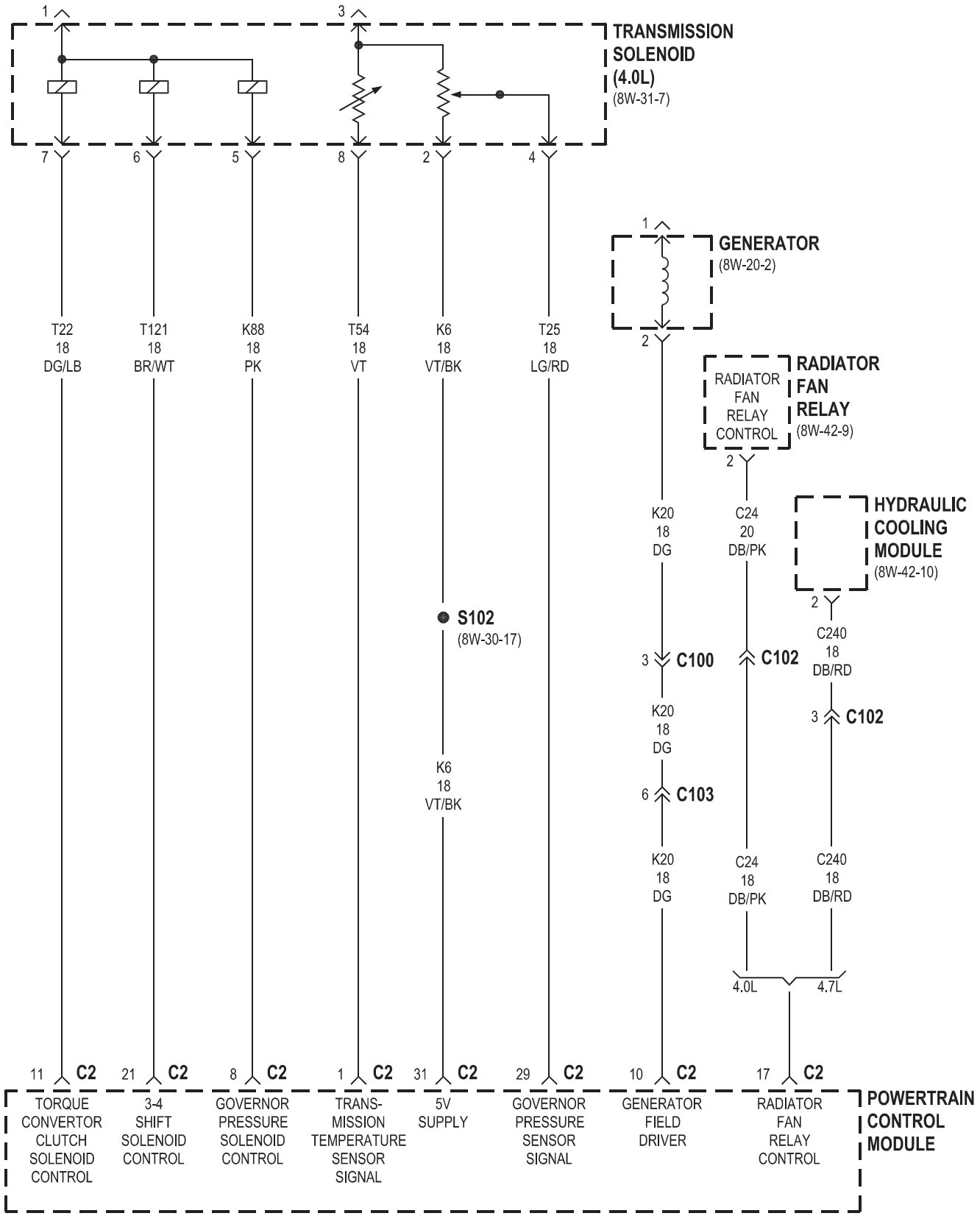
TRANSMISSION SOLENOID (4.0L)
(8W-31-7)
1
3
7
6
5
8
2
4
T22 18 DG/LB
T121 18 BR/WT
K88 18 PK
T54 18 VT
K6 18 VT/BK
T25 18 LG/RD
GENERATOR
(8W-20-2)
RADIATOR FAN RELAY CONTROL
RADIATOR FAN RELAY
(8W-42-9)
HYDRAULIC COOLING MODULE
(8W-42-10)
K20 18 DG
C24 20 DB/PK
C240 18 DB/RD
S102
(8W-30-17)
C100
C102
C103
K6 18 VT/BK
C24 18 DB/PK
4.0L
4.7L
11 C2
21 C2
8 C2
1 C2
31 C2
29 C2
10 C2
17 C2
TORQUE CONVERTOR CLUTCH SOLENOID CONTROL
3-4 SHIFT SOLENOID CONTROL
GOVERNOR PRESSURE SOLENOID CONTROL
TRANS-MISSION TEMPERATURE SENSOR SIGNAL
5V SUPPLY
GOVERNOR PRESSURE SENSOR SIGNAL
GENERATOR FIELD DRIVER
RADIATOR FAN RELAY CONTROL
POWERTRAIN CONTROL MODULE

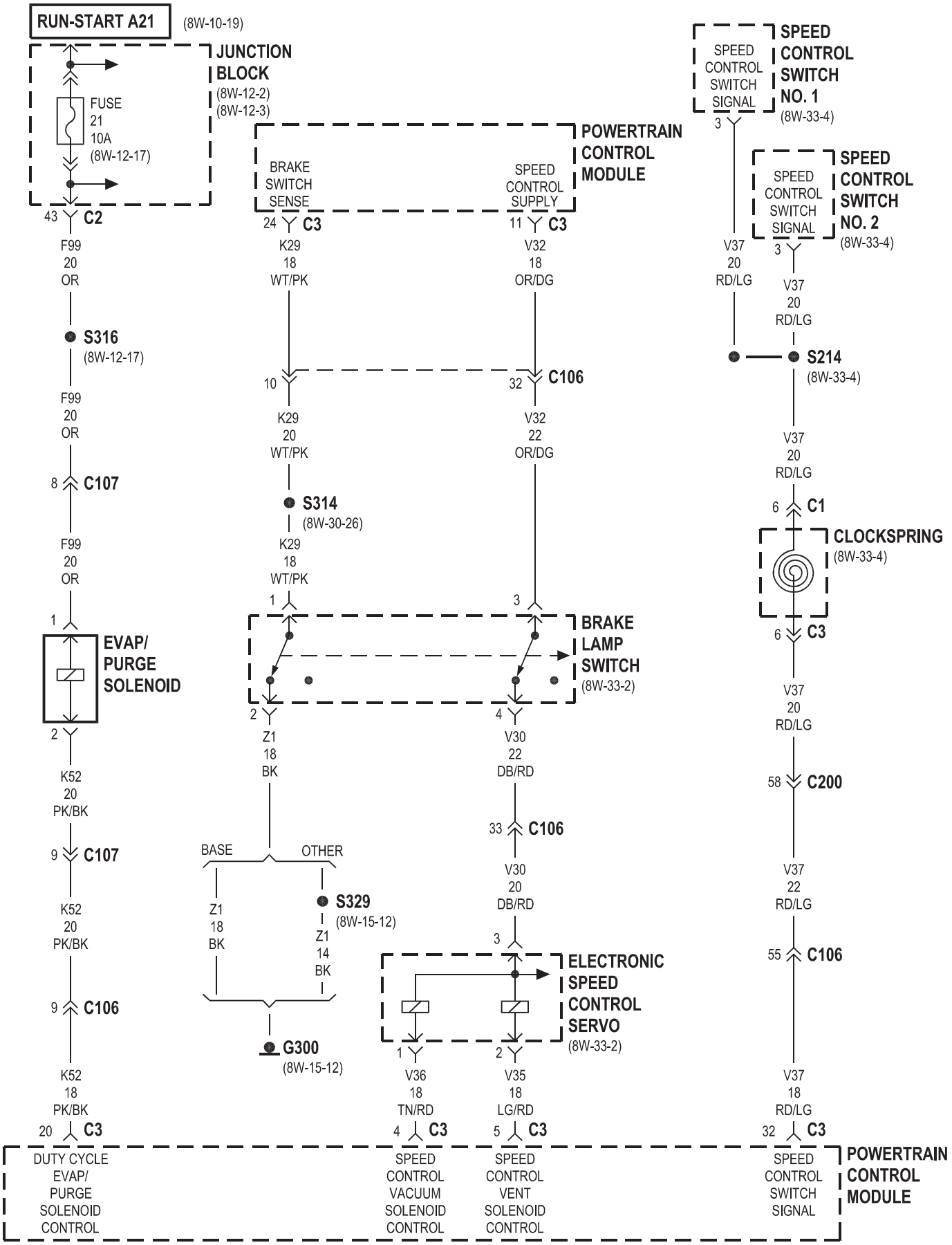
RUN-START A21
(8W-10-19)
JUNCTION BLOCK
(8W-12-2)
(8W-12-3)
FUSE
21
10A
(8W-12-17)
43 C2
F99
20
OR
S316
(8W-12-17)
F99
20
OR
8 C107
F99
20
OR
1
EVAP/
PURGE
SOLENOID
2
K52
20
PK/BK
9 C107
K52
20
PK/BK
9 C106
K52
18
PK/BK
20 C3
DUTY CYCLE
EVAP/
PURGE
SOLENOID
CONTROL
POWERTRAIN
CONTROL
MODULE
BRAKE
SWITCH
SENSE
SPEED
CONTROL
SUPPLY
24 C3
11 C3
K29
18
WT/PK
V32
18
OR/DG
10
32 C106
K29
20
WT/PK
V32
22
OR/DG
S314
(8W-30-26)
K29
18
WT/PK
1
3
BRAKE
LAMP
SWITCH
(8W-33-2)
2
4
Z1
18
BK
V30
22
DB/RD
33 C106
V30
20
DB/RD
3
BASE
OTHER
Z1
18
BK
S329
(8W-15-12)
Z1
14
BK
G300
(8W-15-12)
ELECTRONIC
SPEED
CONTROL
SERVO
(8W-33-2)
1
2
V36
18
TN/RD
V35
18
LG/RD
4 C3
5 C3
SPEED
CONTROL
VACUUM
SOLENOID
CONTROL
SPEED
CONTROL
VENT
SOLENOID
CONTROL
SPEED
CONTROL
SWITCH
SIGNAL
SPEED
CONTROL
SWITCH
NO. 1
(8W-33-4)
3
V37
20
RD/LG
SPEED
CONTROL
SWITCH
SIGNAL
SPEED
CONTROL
SWITCH
NO. 2
(8W-33-4)
3
V37
20
RD/LG
S214
(8W-33-4)
V37
20
RD/LG
6 C1
CLOCKSPRING
(8W-33-4)
6 C3
V37
20
RD/LG
58 C200
V37
22
RD/LG
55 C106
V37
18
RD/LG
32 C3
SPEED
CONTROL
SWITCH
SIGNAL
POWERTRAIN
CONTROL
MODULE

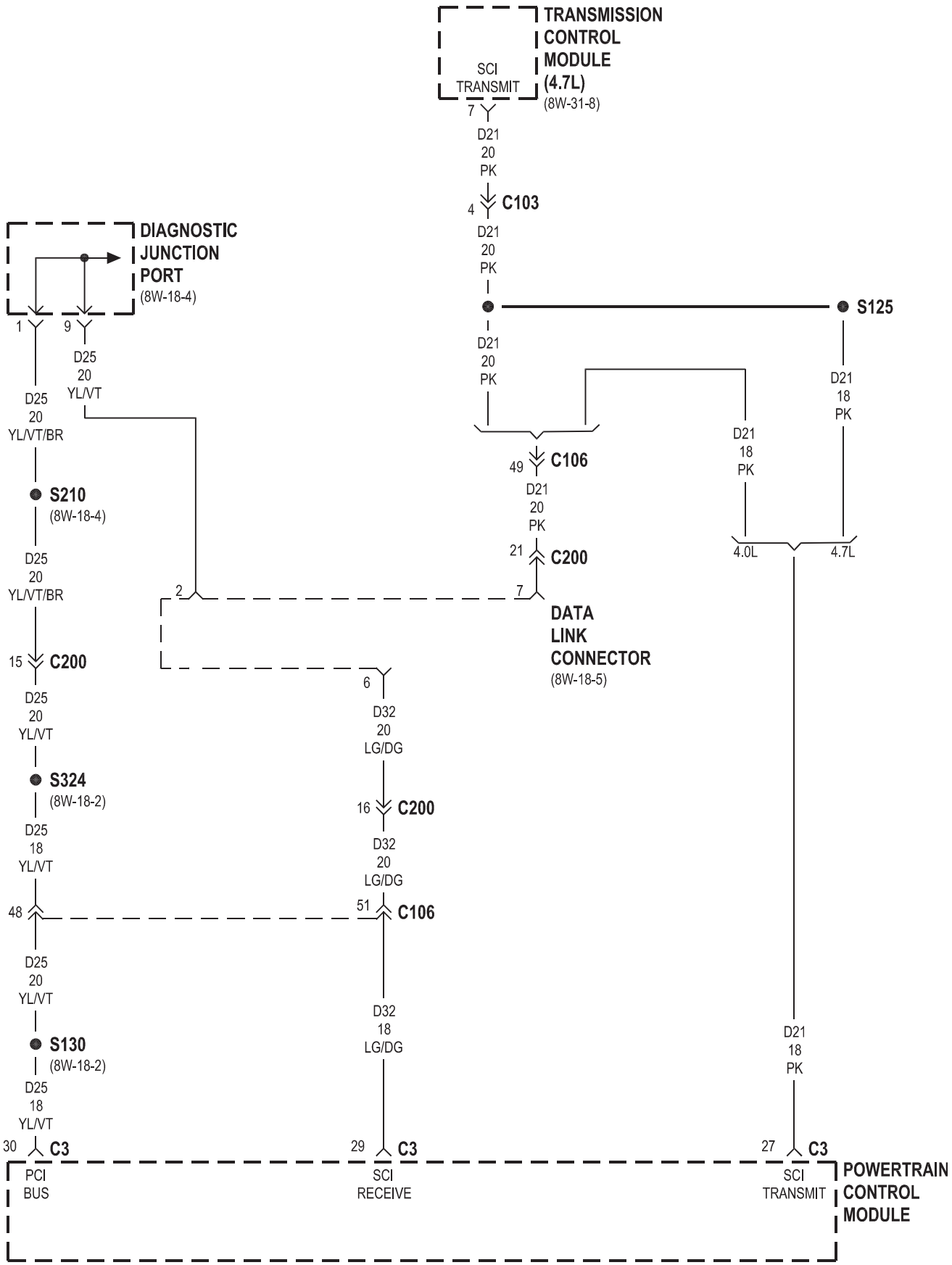
TRANSMISSION CONTROL MODULE (4.7L)
(8W-31-8)
SCI TRANSMIT
7
D21 20 PK
4
C103
D21 20 PK
DIAGNOSTIC JUNCTION PORT
(8W-18-4)
1
9
D25 20 YL/VT
D25 20 YL/VT/BR
S125
D21 20 PK
D21 18 PK
49
C106
D21 20 PK
D21 18 PK
S210
(8W-18-4)
21
C200
4.0L
4.7L
D25 20 YL/VT/BR
2
7
DATA LINK CONNECTOR
(8W-18-5)
15
C200
6
D32 20 LG/DG
D25 20 YL/VT
S324
(8W-18-2)
16
C200
D25 18 YL/VT
D32 20 LG/DG
48
51
C106
D25 20 YL/VT
D32 18 LG/DG
D21 18 PK
S130
(8W-18-2)
D25 18 YL/VT
30
C3
29
C3
27
C3
PCI BUS
SCI RECEIVE
SCI TRANSMIT
POWERTRAIN CONTROL MODULE

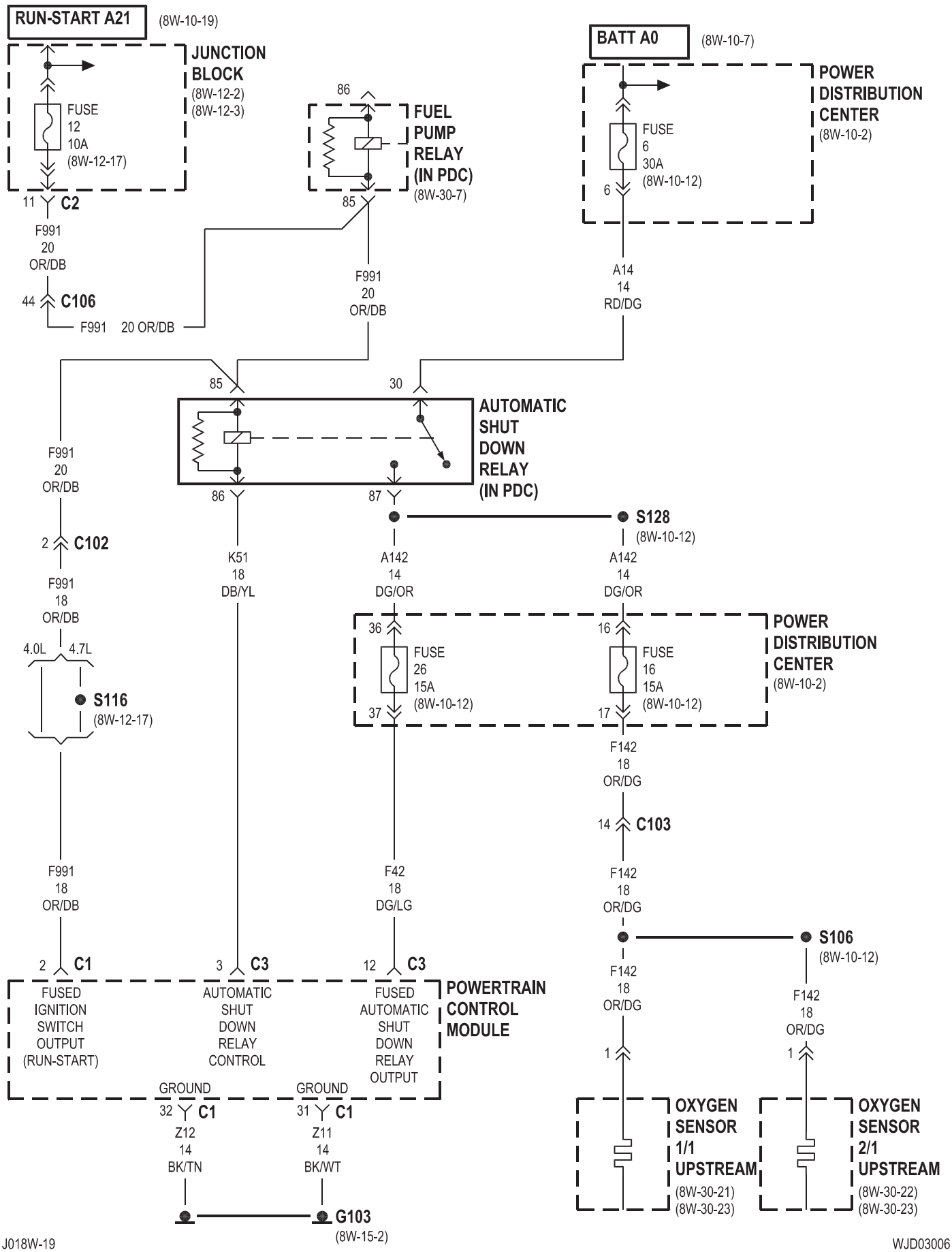
RUN-START A21
(8W-10-19)
JUNCTION BLOCK
(8W-12-2)
(8W-12-3)
FUSE 12 10A
(8W-12-17)
11 C2
F991 20 OR/DB
44 C106
F991 20 OR/DB
86
FUEL PUMP RELAY (IN PDC)
(8W-30-7)
85
F991 20 OR/DB
BATT A0
(8W-10-7)
POWER DISTRIBUTION CENTER
(8W-10-2)
FUSE 6 30A
(8W-10-12)
6
A14 14 RD/DG
85
30
AUTOMATIC SHUT DOWN RELAY (IN PDC)
86
87
F991 20 OR/DB
2 C102
F991 18 OR/DB
K51 18 DB/YL
S128
(8W-10-12)
A142 14 DG/OR
A142 14 DG/OR
POWER DISTRIBUTION CENTER
(8W-10-2)
36
FUSE 26 15A
(8W-10-12)
37
16
FUSE 16 15A
(8W-10-12)
17
F142 18 OR/DG
14 C103
4.0L
4.7L
S116
(8W-12-17)
F991 18 OR/DB
F42 18 DG/LG
F142 18 OR/DG
S106
(8W-10-12)
2 C1
3 C3
12 C3
FUSED IGNITION SWITCH OUTPUT (RUN-START)
AUTOMATIC SHUT DOWN RELAY CONTROL
FUSED AUTOMATIC SHUT DOWN RELAY OUTPUT
POWERTRAIN CONTROL MODULE
F142 18 OR/DG
F142 18 OR/DG
1
1
GROUND
GROUND
32 C1
31 C1
Z12 14 BK/TN
Z11 14 BK/WT
G103
(8W-15-2)
OXYGEN SENSOR 1/1 UPSTREAM
(8W-30-21)
(8W-30-23)
OXYGEN SENSOR 2/1 UPSTREAM
(8W-30-22)
(8W-30-23)

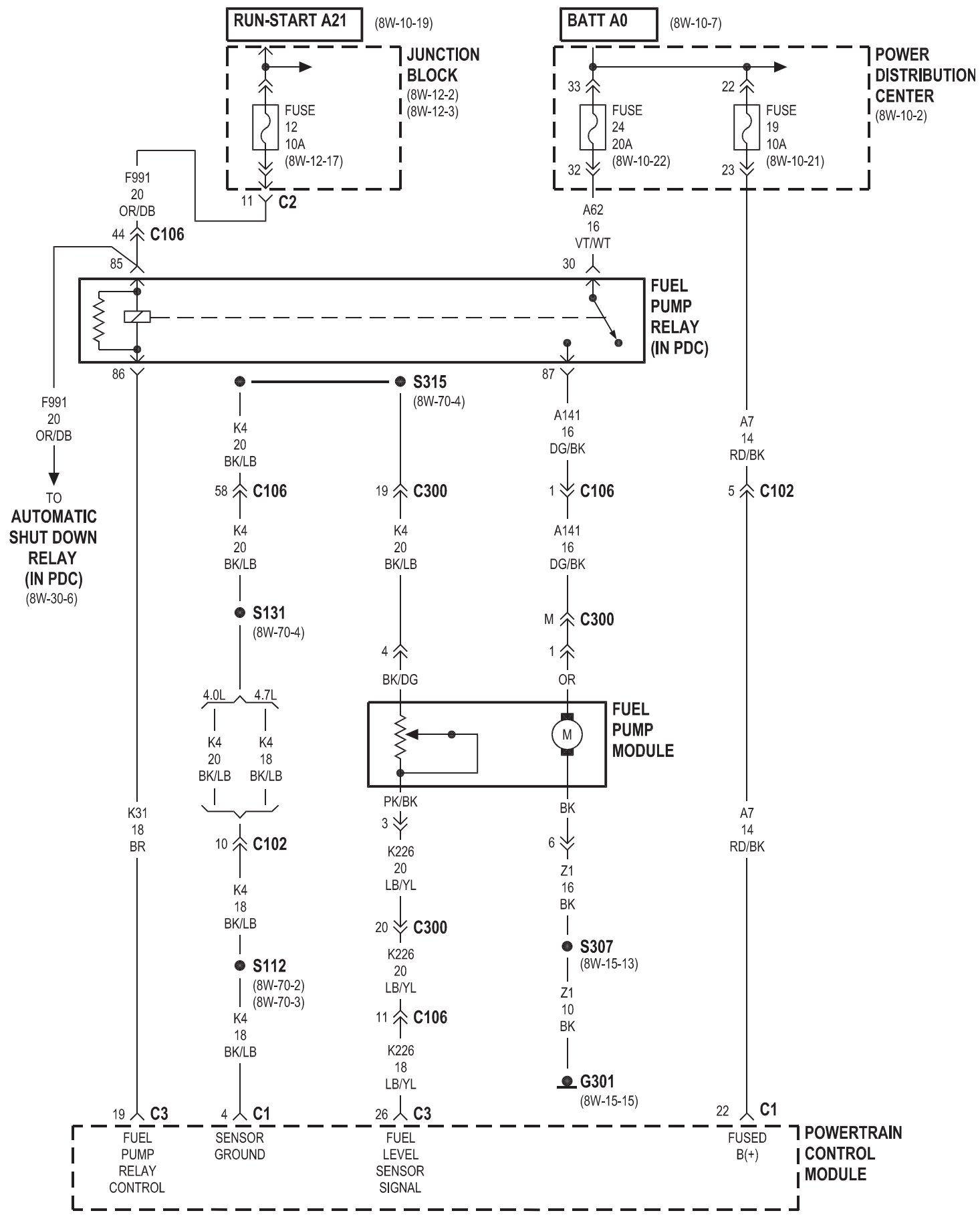
RUN-START A21
(8W-10-19)
BATT A0
(8W-10-7)
JUNCTION BLOCK
(8W-12-2)
(8W-12-3)
FUSE 12 10A (8W-12-17)
POWER DISTRIBUTION CENTER
(8W-10-2)
33
22
FUSE 24 20A (8W-10-22)
FUSE 19 10A (8W-10-21)
32
23
F991 20 OR/DB
11
C2
A62 16 VT/WT
44
C106
85
30
FUEL PUMP RELAY (IN PDC)
86
87
S315
(8W-70-4)
F991 20 OR/DB
TO AUTOMATIC SHUT DOWN RELAY (IN PDC)
(8W-30-6)
K4 20 BK/LB
A141 16 DG/BK
A7 14 RD/BK
58
C106
19
C300
1
C106
5
C102
K4 20 BK/LB
K4 20 BK/LB
A141 16 DG/BK
S131
(8W-70-4)
M
C300
4
BK/DG
1
OR
4.0L
4.7L
K4 20 BK/LB
K4 18 BK/LB
FUEL PUMP MODULE
M
PK/BK
BK
K31 18 BR
3
6
A7 14 RD/BK
10
C102
K226 20 LB/YL
Z1 16 BK
K4 18 BK/LB
20
C300
S307
(8W-15-13)
S112
(8W-70-2)
(8W-70-3)
K226 20 LB/YL
Z1 10 BK
K4 18 BK/LB
11
C106
K226 18 LB/YL
G301
(8W-15-15)
19
C3
4
C1
26
C3
22
C1
FUEL PUMP RELAY CONTROL
SENSOR GROUND
FUEL LEVEL SENSOR SIGNAL
FUSED B(+)
POWERTRAIN CONTROL MODULE

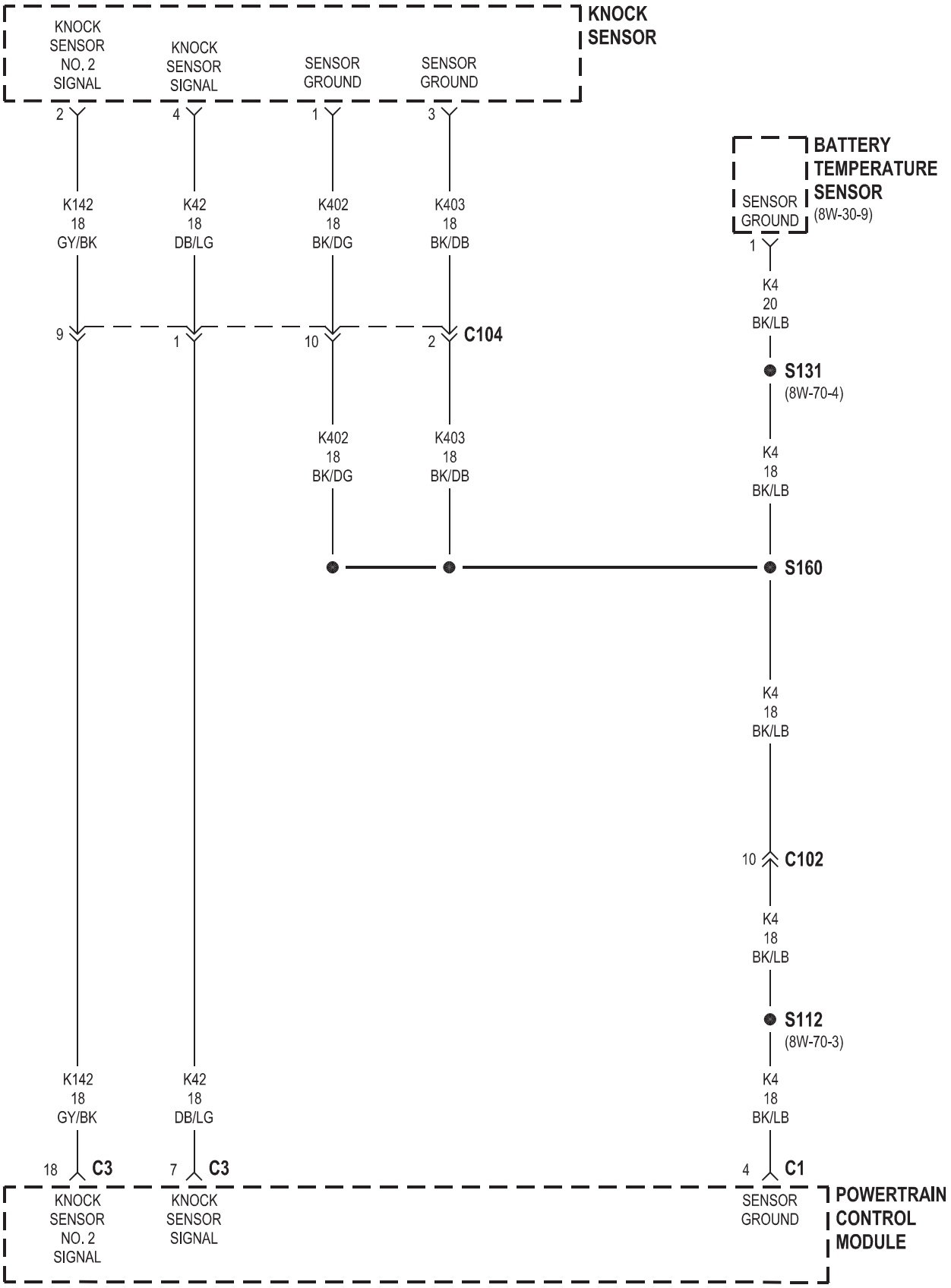
KNOCK SENSOR
KNOCK SENSOR NO. 2 SIGNAL
KNOCK SENSOR SIGNAL
SENSOR GROUND
SENSOR GROUND
2
4
1
3
K142 18 GY/BK
K42 18 DB/LG
K402 18 BK/DG
K403 18 BK/DB
BATTERY TEMPERATURE SENSOR
(8W-30-9)
SENSOR GROUND
1
K4 20 BK/LB
9
1
10
2
C104
S131
(8W-70-4)
K402 18 BK/DG
K403 18 BK/DB
K4 18 BK/LB
S160
K4 18 BK/LB
10
C102
K4 18 BK/LB
S112
(8W-70-3)
K142 18 GY/BK
K42 18 DB/LG
K4 18 BK/LB
18
C3
7
C3
4
C1
KNOCK SENSOR NO. 2 SIGNAL
KNOCK SENSOR SIGNAL
SENSOR GROUND
POWERTRAIN CONTROL MODULE

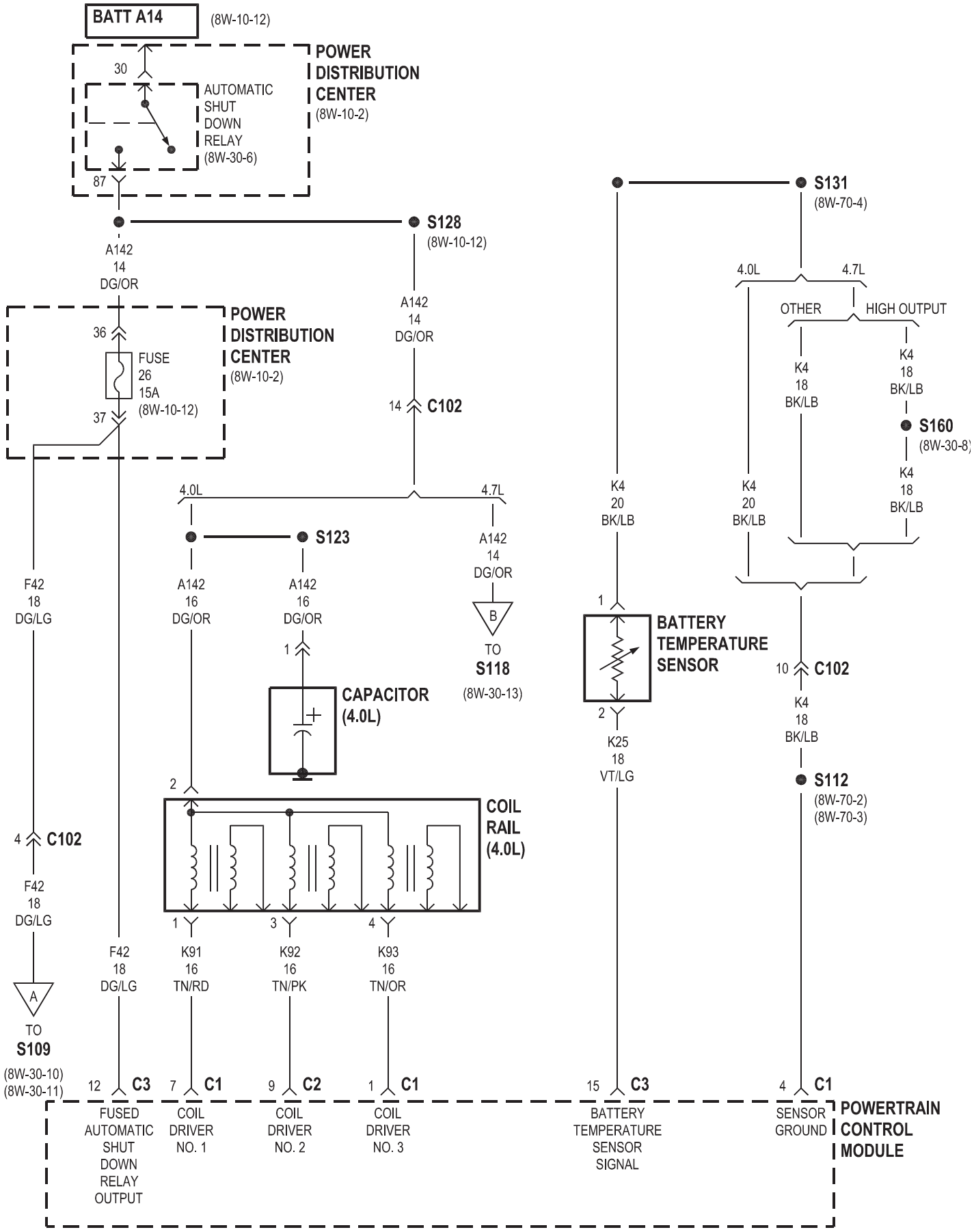
BATT A14
(8W-10-12)
POWER DISTRIBUTION CENTER
(8W-10-2)
30
AUTOMATIC SHUT DOWN RELAY
(8W-30-6)
87
S128
(8W-10-12)
A142
14
DG/OR
POWER DISTRIBUTION CENTER
(8W-10-2)
36
FUSE
26
15A
(8W-10-12)
37
A142
14
DG/OR
14
C102
4.0L
4.7L
S123
A142
16
DG/OR
A142
16
DG/OR
A142
14
DG/OR
B
TO
S118
(8W-30-13)
F42
18
DG/LG
1
CAPACITOR
(4.0L)
2
COIL RAIL
(4.0L)
4
C102
F42
18
DG/LG
1
3
4
K91
16
TN/RD
K92
16
TN/PK
K93
16
TN/OR
F42
18
DG/LG
A
TO
S109
(8W-30-10)
(8W-30-11)
12
C3
7
C1
9
C2
1
C1
FUSED AUTOMATIC SHUT DOWN RELAY OUTPUT
COIL DRIVER NO. 1
COIL DRIVER NO. 2
COIL DRIVER NO. 3
S131
(8W-70-4)
K4
20
BK/LB
1
BATTERY TEMPERATURE SENSOR
2
K25
18
VT/LG
15
C3
BATTERY TEMPERATURE SENSOR SIGNAL
4.0L
4.7L
OTHER
HIGH OUTPUT
K4
18
BK/LB
K4
18
BK/LB
S160
(8W-30-8)
K4
20
BK/LB
K4
18
BK/LB
10
C102
K4
18
BK/LB
S112
(8W-70-2)
(8W-70-3)
4
C1
SENSOR GROUND
POWERTRAIN CONTROL MODULE

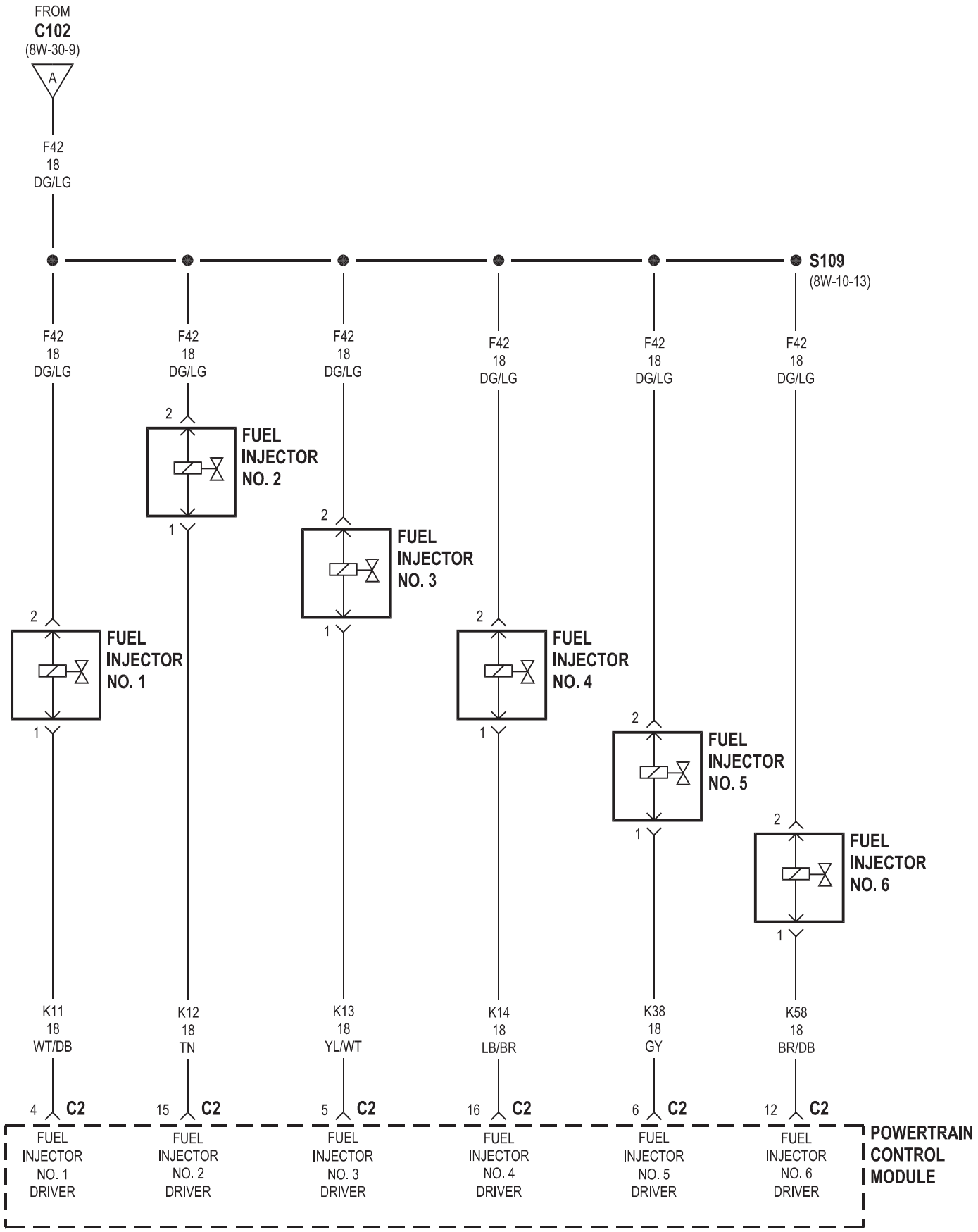
FROM
C102
(8W-30-9)
A
F42
18
DG/LG
S109
(8W-10-13)
F42
18
DG/LG
FUEL INJECTOR NO. 1
FUEL INJECTOR NO. 2
FUEL INJECTOR NO. 3
FUEL INJECTOR NO. 4
FUEL INJECTOR NO. 5
FUEL INJECTOR NO. 6
K11
18
WT/DB
K12
18
TN
K13
18
YL/WT
K14
18
LB/BR
K38
18
GY
K58
18
BR/DB
4 C2
15 C2
5 C2
16 C2
6 C2
12 C2
FUEL INJECTOR NO. 1 DRIVER
FUEL INJECTOR NO. 2 DRIVER
FUEL INJECTOR NO. 3 DRIVER
FUEL INJECTOR NO. 4 DRIVER
FUEL INJECTOR NO. 5 DRIVER
FUEL INJECTOR NO. 6 DRIVER
POWERTRAIN CONTROL MODULE

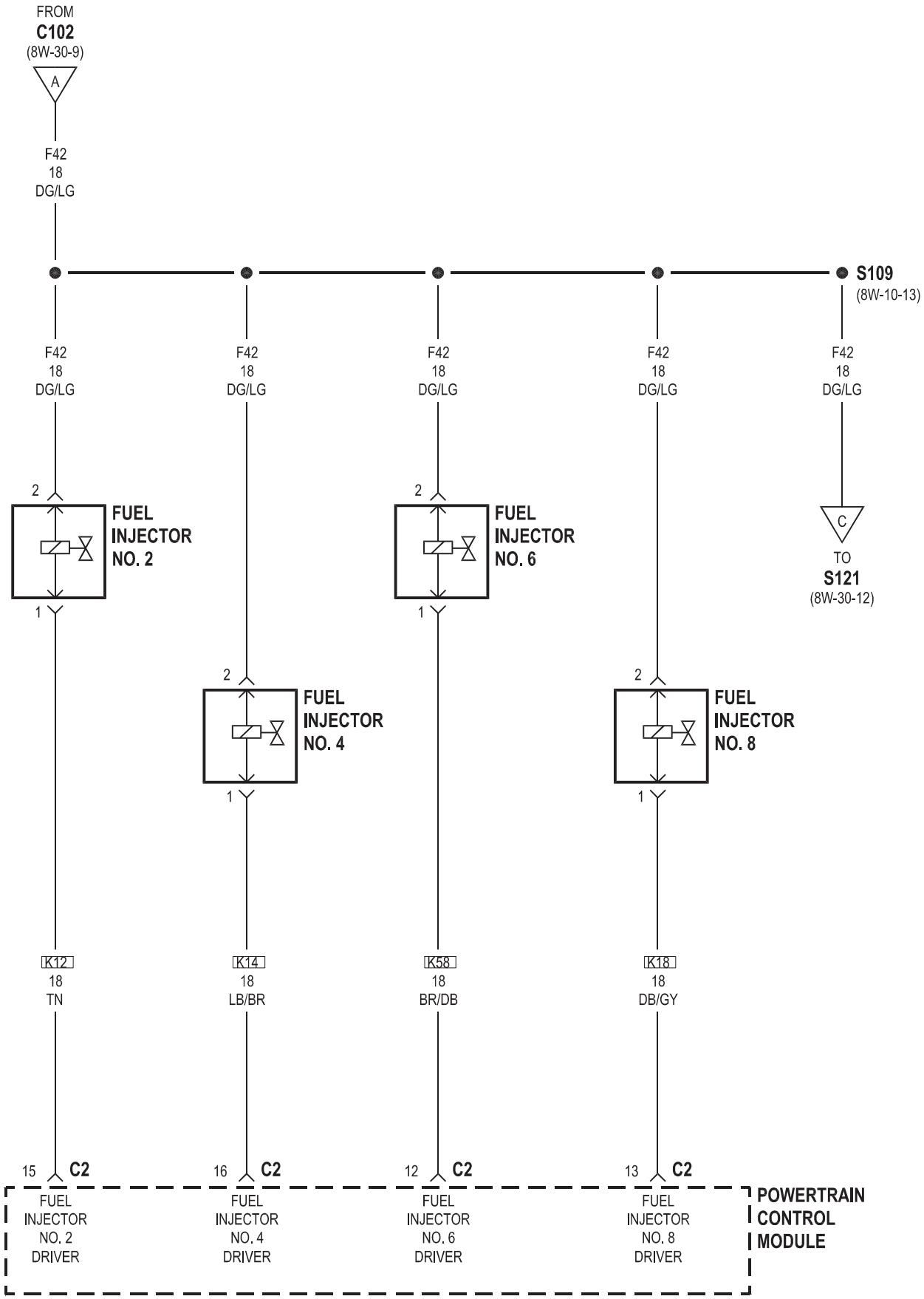
FROM
C102
(8W-30-9)
A
F42
18
DG/LG
S109
(8W-10-13)
F42
18
DG/LG
F42
18
DG/LG
F42
18
DG/LG
F42
18
DG/LG
F42
18
DG/LG
2
FUEL
INJECTOR
NO. 2
1
2
FUEL
INJECTOR
NO. 6
1
C
TO
S121
(8W-30-12)
2
FUEL
INJECTOR
NO. 4
1
2
FUEL
INJECTOR
NO. 8
1
K12
18
TN
K14
18
LB/BR
K58
18
BR/DB
K18
18
DB/GY
15 C2
16 C2
12 C2
13 C2
FUEL
INJECTOR
NO. 2
DRIVER
FUEL
INJECTOR
NO. 4
DRIVER
FUEL
INJECTOR
NO. 6
DRIVER
FUEL
INJECTOR
NO. 8
DRIVER
POWERTRAIN
CONTROL
MODULE

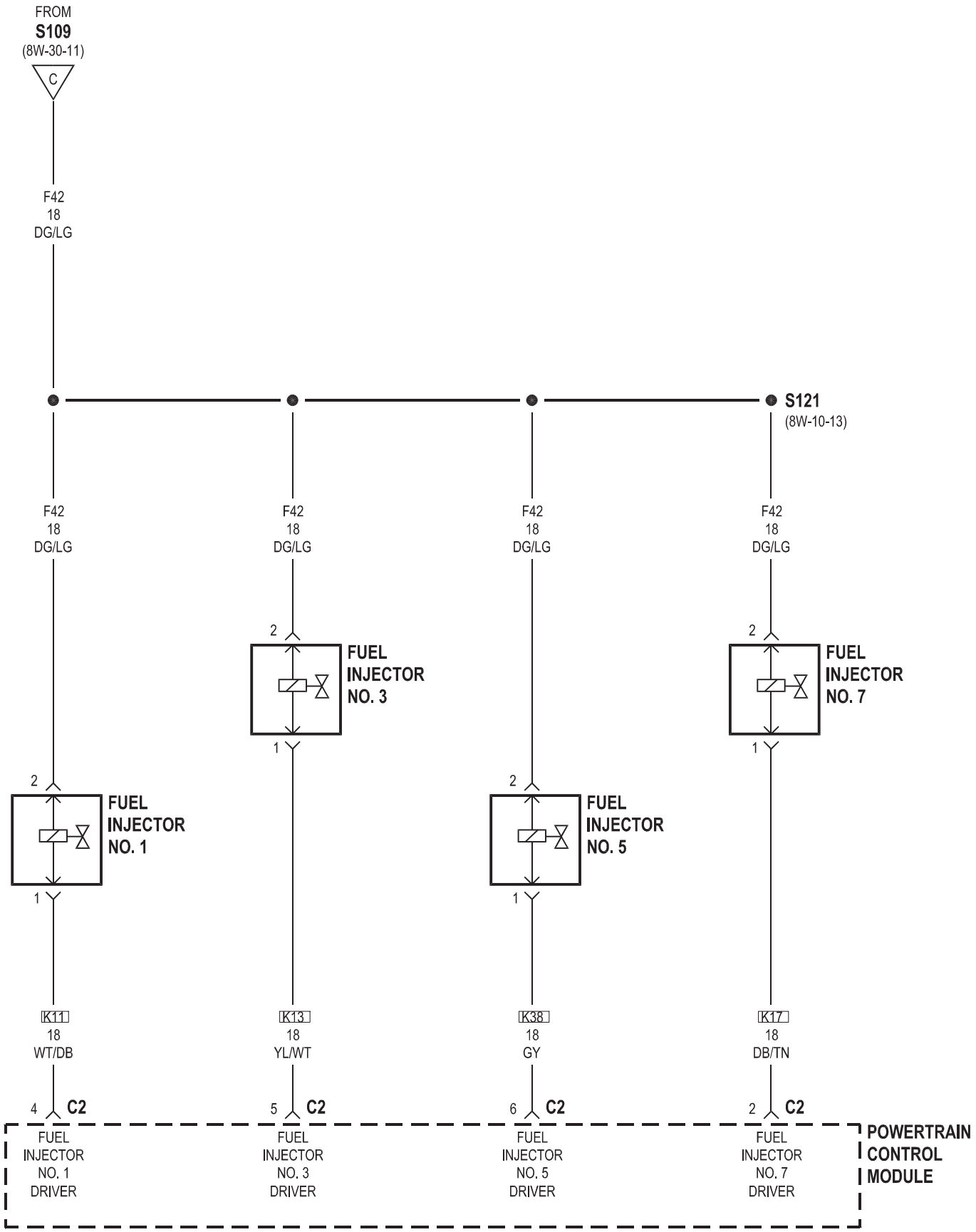
FROM
S109
(8W-30-11)
C
F42
18
DG/LG
S121
(8W-10-13)
F42
18
DG/LG
F42
18
DG/LG
F42
18
DG/LG
F42
18
DG/LG
2
FUEL
INJECTOR
NO. 3
1
2
FUEL
INJECTOR
NO. 7
1
2
FUEL
INJECTOR
NO. 1
1
2
FUEL
INJECTOR
NO. 5
1
K11
18
WT/DB
K13
18
YL/WT
K38
18
GY
K17
18
DB/TN
4 C2
5 C2
6 C2
2 C2
FUEL
INJECTOR
NO. 1
DRIVER
FUEL
INJECTOR
NO. 3
DRIVER
FUEL
INJECTOR
NO. 5
DRIVER
FUEL
INJECTOR
NO. 7
DRIVER
POWERTRAIN
CONTROL
MODULE

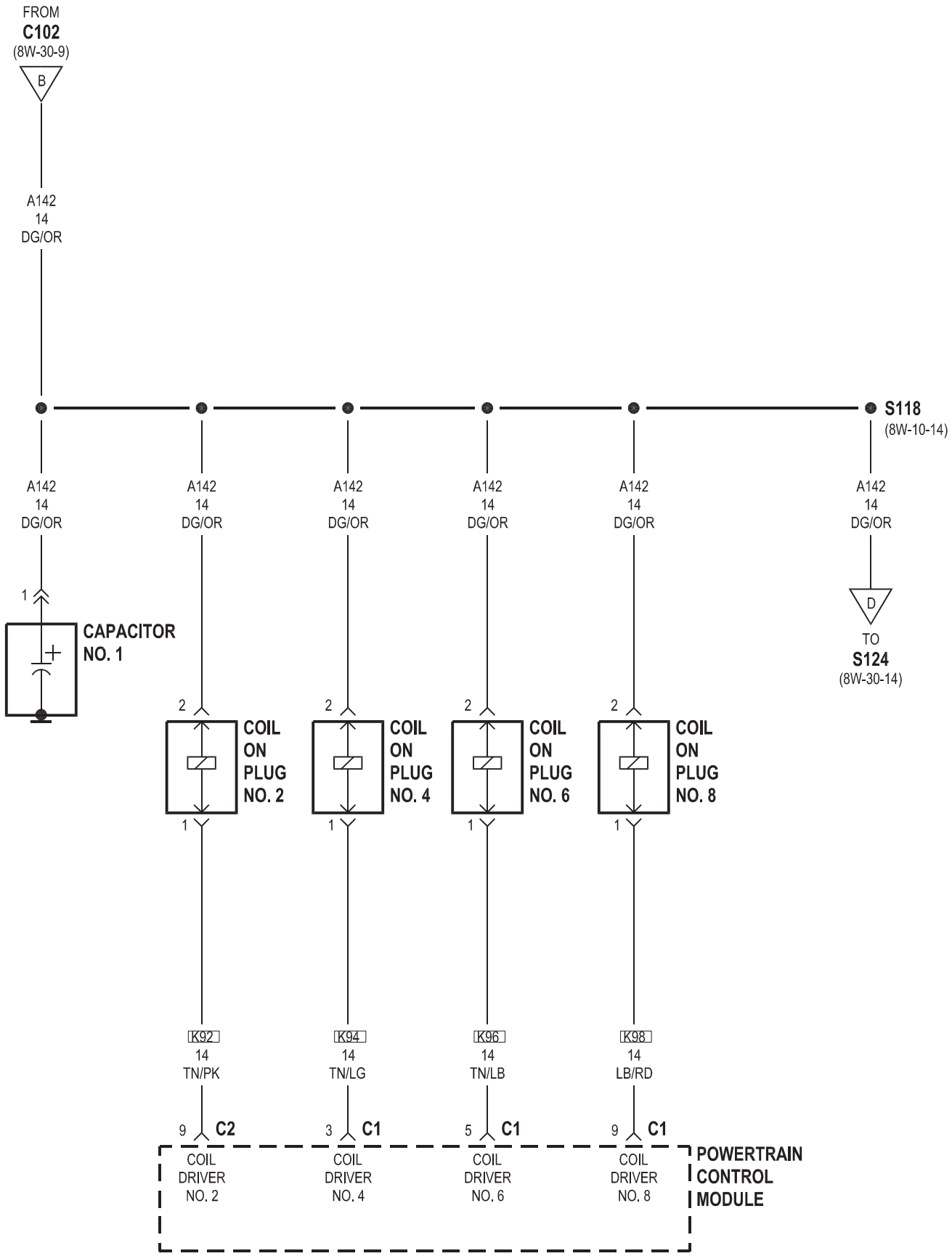
FROM
C102
(8W-30-9)
B
A142
14
DG/OR
S118
(8W-10-14)
A142
14
DG/OR
1
CAPACITOR
NO. 1
2
COIL
ON
PLUG
NO. 2
COIL
ON
PLUG
NO. 4
COIL
ON
PLUG
NO. 6
COIL
ON
PLUG
NO. 8
D
TO
S124
(8W-30-14)
K92
14
TN/PK
K94
14
TN/LG
K96
14
TN/LB
K98
14
LB/RD
9
C2
3
C1
5
C1
9
C1
COIL
DRIVER
NO. 2
COIL
DRIVER
NO. 4
COIL
DRIVER
NO. 6
COIL
DRIVER
NO. 8
POWERTRAIN
CONTROL
MODULE

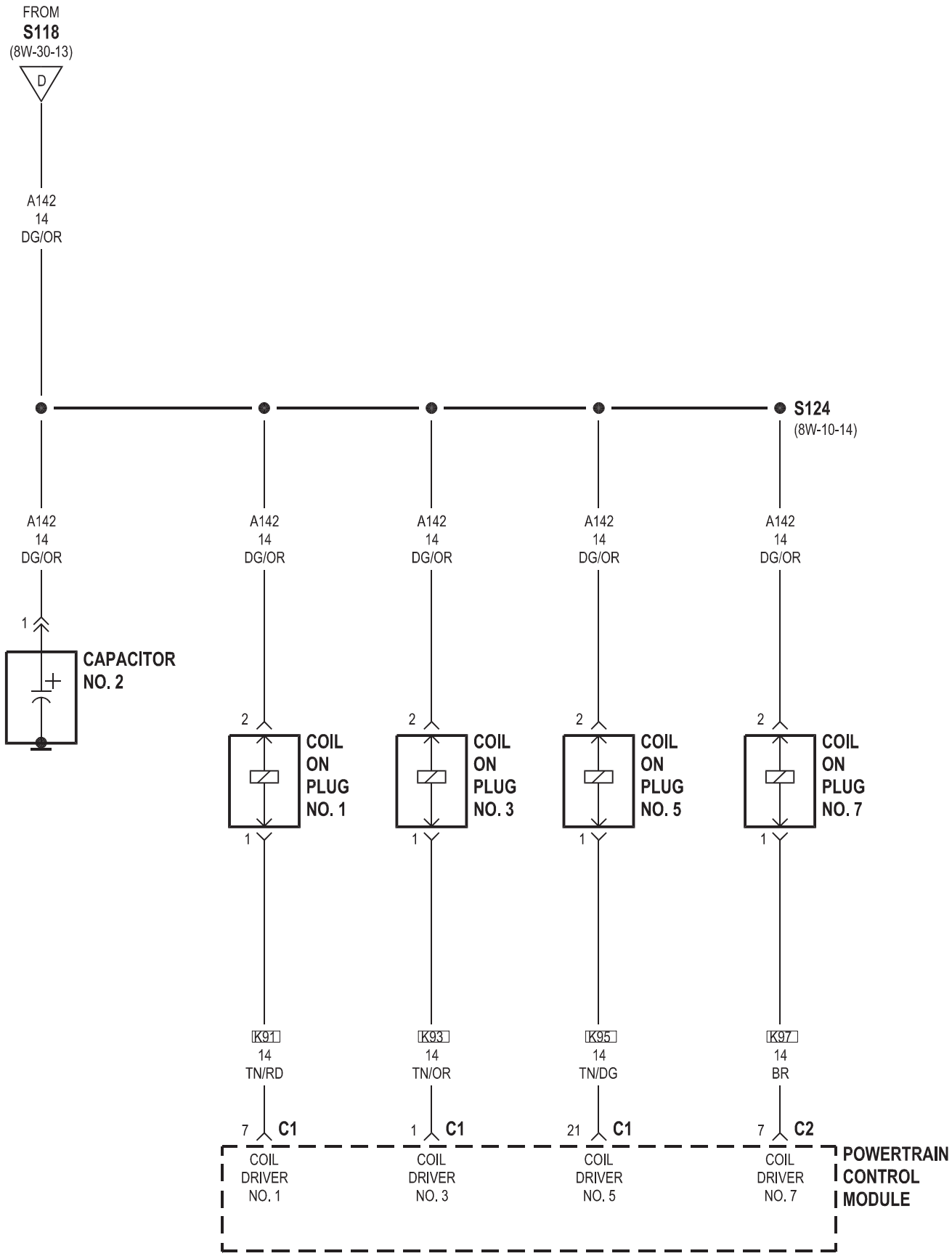
FROM
S118
(8W-30-13)
D
A142
14
DG/OR
S124
(8W-10-14)
A142
14
DG/OR
1
CAPACITOR
NO. 2
2
COIL
ON
PLUG
NO. 1
COIL
ON
PLUG
NO. 3
COIL
ON
PLUG
NO. 5
COIL
ON
PLUG
NO. 7
1
K91
14
TN/RD
K93
14
TN/OR
K95
14
TN/DG
K97
14
BR
7 C1
1 C1
21 C1
7 C2
COIL
DRIVER
NO. 1
COIL
DRIVER
NO. 3
COIL
DRIVER
NO. 5
COIL
DRIVER
NO. 7
POWERTRAIN
CONTROL
MODULE

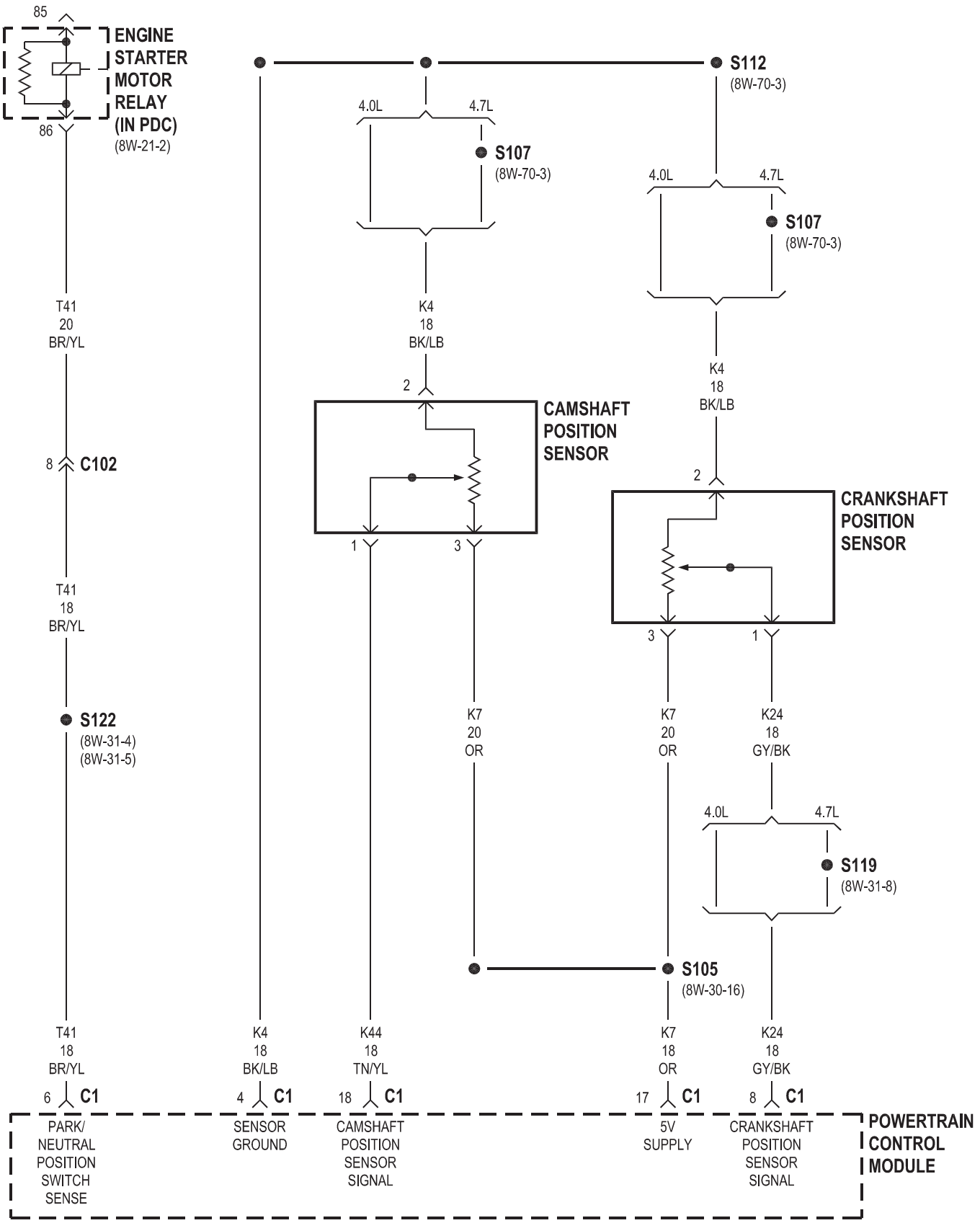
85
ENGINE STARTER MOTOR RELAY (IN PDC)
(8W-21-2)
86
S112
(8W-70-3)
4.0L
4.7L
S107
(8W-70-3)
4.0L
4.7L
S107
(8W-70-3)
T41
20
BR/YL
K4
18
BK/LB
K4
18
BK/LB
2
CAMSHAFT POSITION SENSOR
8
C102
2
CRANKSHAFT POSITION SENSOR
1
3
T41
18
BR/YL
3
1
S122
(8W-31-4)
(8W-31-5)
K7
20
OR
K7
20
OR
K24
18
GY/BK
4.0L
4.7L
S119
(8W-31-8)
S105
(8W-30-16)
T41
18
BR/YL
K4
18
BK/LB
K44
18
TN/YL
K7
18
OR
K24
18
GY/BK
6
C1
4
C1
18
C1
17
C1
8
C1
PARK/ NEUTRAL POSITION SWITCH SENSE
SENSOR GROUND
CAMSHAFT POSITION SENSOR SIGNAL
5V SUPPLY
CRANKSHAFT POSITION SENSOR SIGNAL
POWERTRAIN CONTROL MODULE

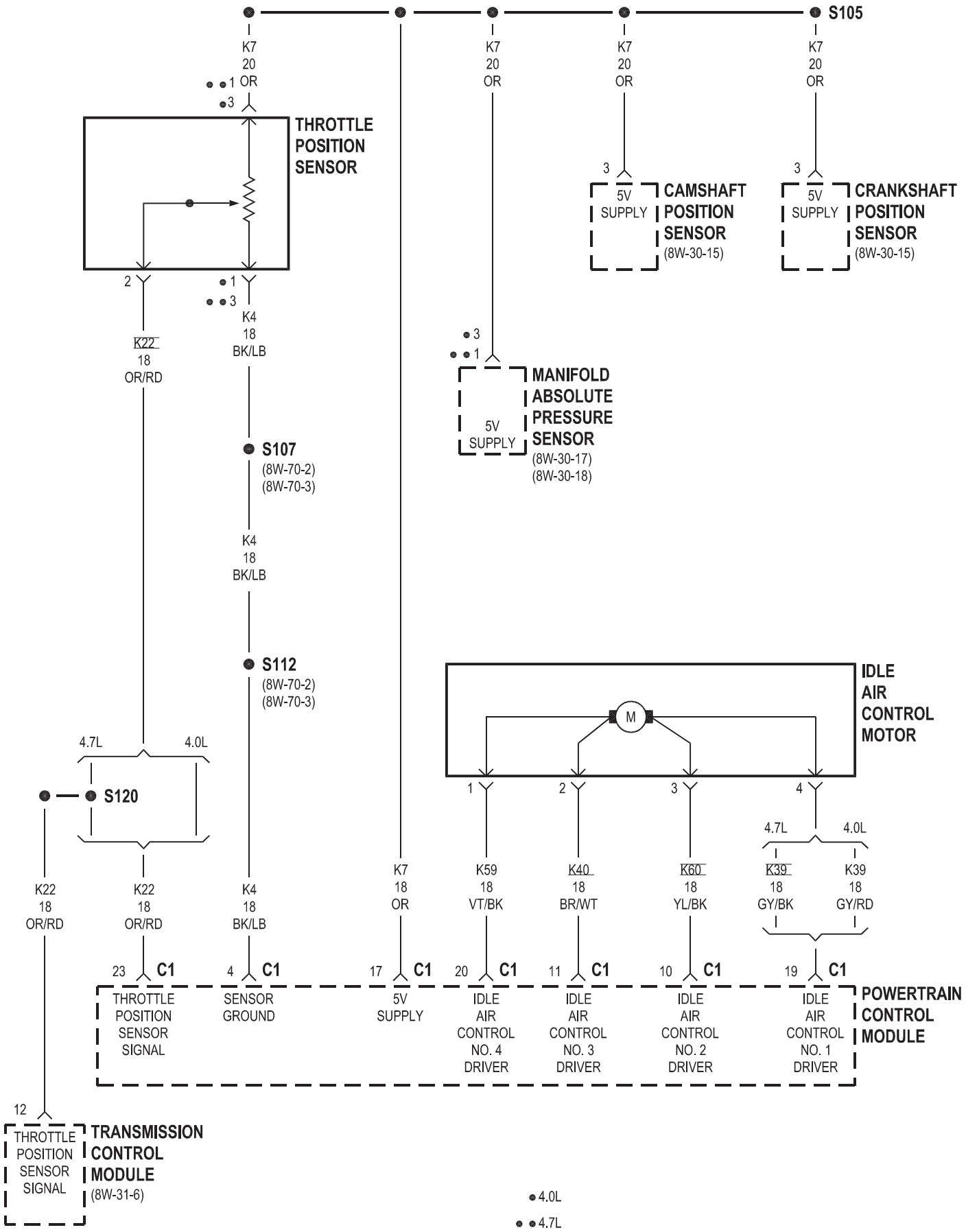

J018W-19 WJD03016

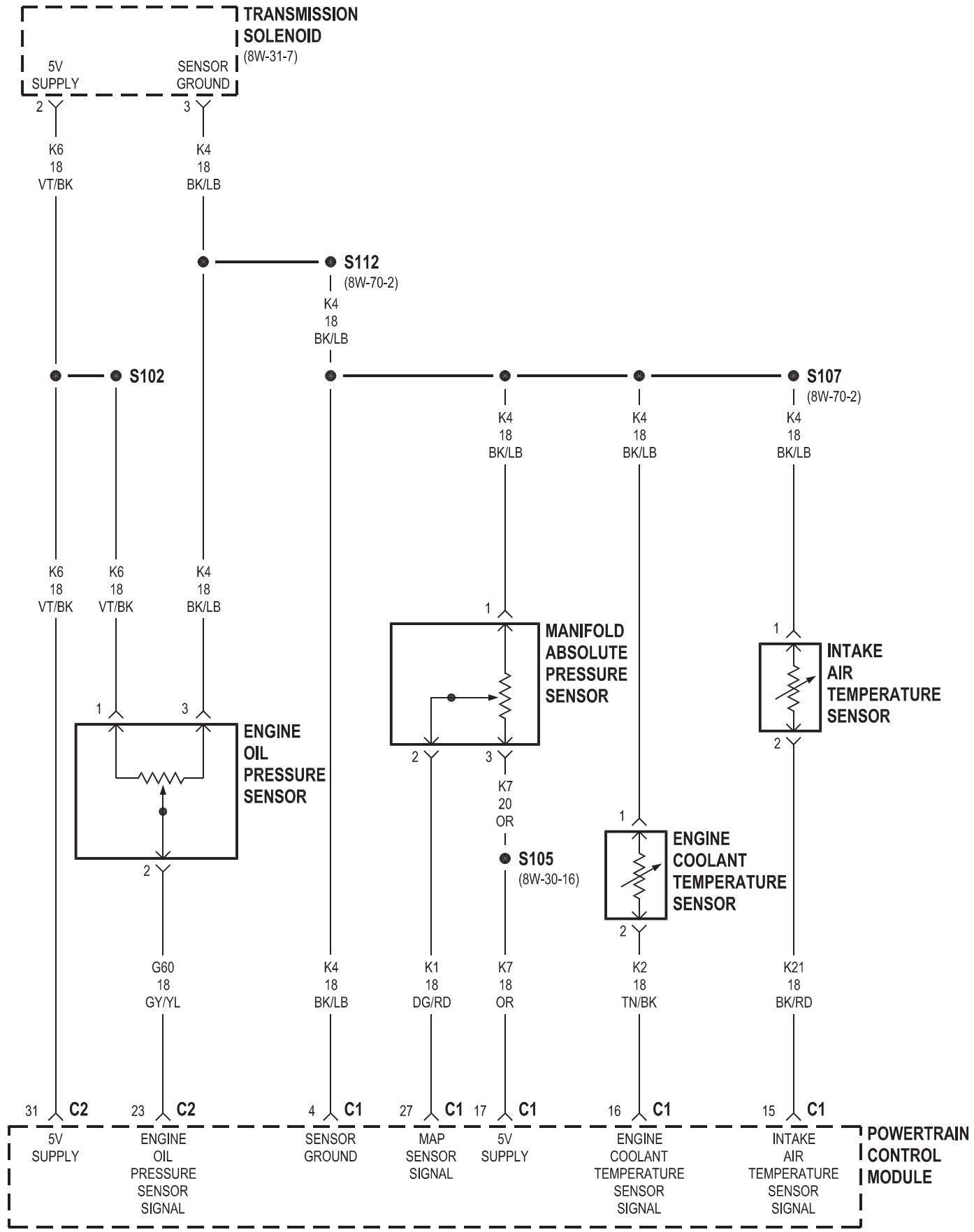
TRANSMISSION SOLENOID
(8W-31-7)
5V SUPPLY
SENSOR GROUND
2
3
K6 18 VT/BK
K4 18 BK/LB
S112
(8W-70-2)
K4 18 BK/LB
S102
S107
(8W-70-2)
K4 18 BK/LB
K4 18 BK/LB
K4 18 BK/LB
K6 18 VT/BK
K6 18 VT/BK
K4 18 BK/LB
1
3
ENGINE OIL PRESSURE SENSOR
2
MANIFOLD ABSOLUTE PRESSURE SENSOR
1
2
3
K7 20 OR
S105
(8W-30-16)
INTAKE AIR TEMPERATURE SENSOR
1
2
ENGINE COOLANT TEMPERATURE SENSOR
1
2
G60 18 GY/YL
K4 18 BK/LB
K1 18 DG/RD
K7 18 OR
K2 18 TN/BK
K21 18 BK/RD
31 C2
23 C2
4 C1
27 C1
17 C1
16 C1
15 C1
5V SUPPLY
ENGINE OIL PRESSURE SENSOR SIGNAL
SENSOR GROUND
MAP SENSOR SIGNAL
5V SUPPLY
ENGINE COOLANT TEMPERATURE SENSOR SIGNAL
INTAKE AIR TEMPERATURE SENSOR SIGNAL
POWERTRAIN CONTROL MODULE

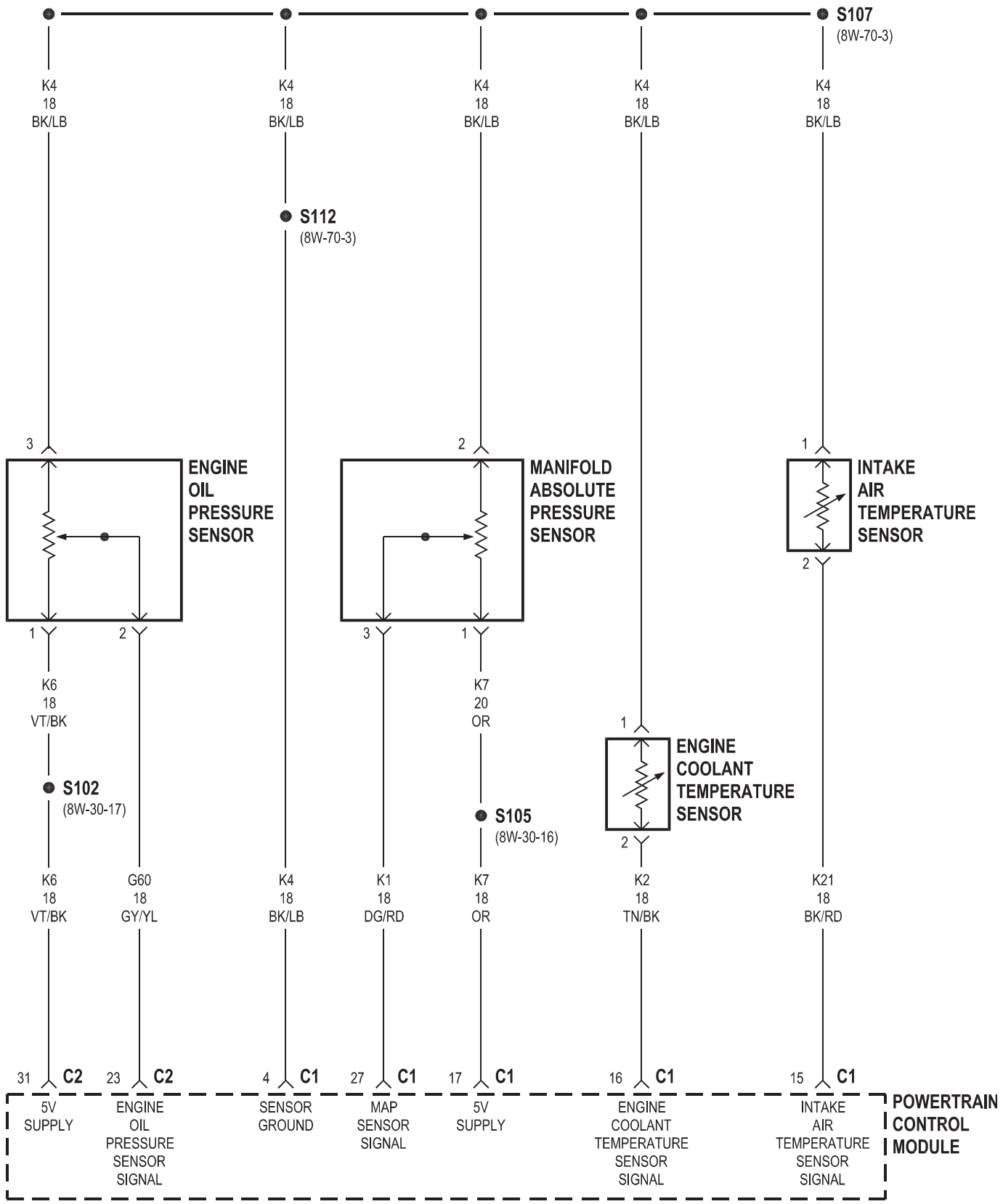
S107
(8W-70-3)
K4
18
BK/LB
S112
(8W-70-3)
ENGINE
OIL
PRESSURE
SENSOR
MANIFOLD
ABSOLUTE
PRESSURE
SENSOR
INTAKE
AIR
TEMPERATURE
SENSOR
K6
18
VT/BK
K7
20
OR
S102
(8W-30-17)
S105
(8W-30-16)
ENGINE
COOLANT
TEMPERATURE
SENSOR
K6
18
VT/BK
G60
18
GY/YL
K4
18
BK/LB
K1
18
DG/RD
K7
18
OR
K2
18
TN/BK
K21
18
BK/RD
31 C2
23 C2
4 C1
27 C1
17 C1
16 C1
15 C1
5V
SUPPLY
ENGINE
OIL
PRESSURE
SENSOR
SIGNAL
SENSOR
GROUND
MAP
SENSOR
SIGNAL
5V
SUPPLY
ENGINE
COOLANT
TEMPERATURE
SENSOR
SIGNAL
INTAKE
AIR
TEMPERATURE
SENSOR
SIGNAL
POWERTRAIN
CONTROL
MODULE

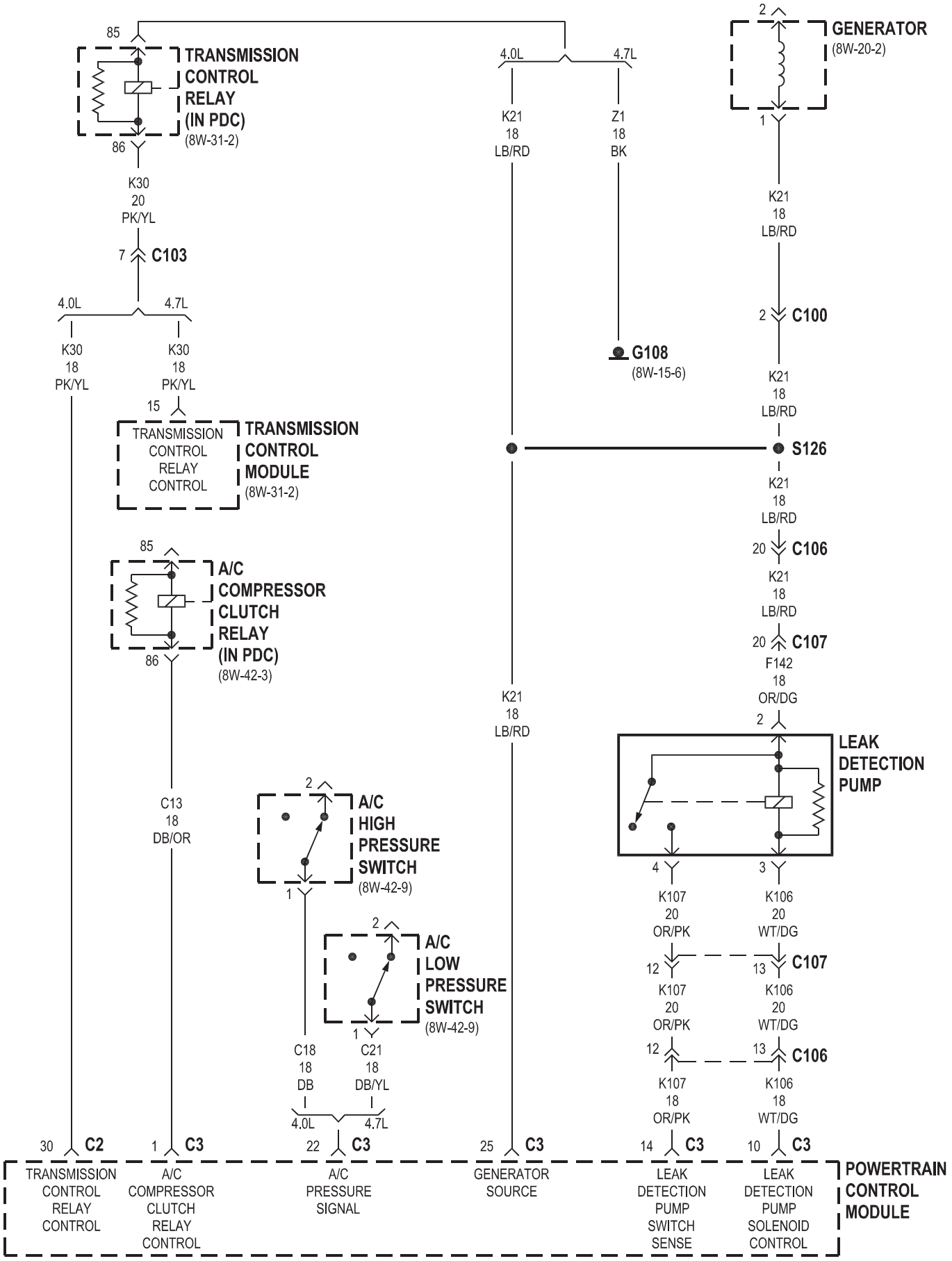
TRANSMISSION CONTROL RELAY (IN PDC)
(8W-31-2)
85
86
K30
20
PK/YL
7
C103
4.0L
4.7L
K30
18
PK/YL
K30
18
PK/YL
15
TRANSMISSION CONTROL RELAY CONTROL
TRANSMISSION CONTROL MODULE
(8W-31-2)
A/C COMPRESSOR CLUTCH RELAY (IN PDC)
(8W-42-3)
C13
18
DB/OR
A/C HIGH PRESSURE SWITCH
(8W-42-9)
A/C LOW PRESSURE SWITCH
(8W-42-9)
C18
18
DB
C21
18
DB/YL
K21
18
LB/RD
Z1
18
BK
G108
(8W-15-6)
GENERATOR
(8W-20-2)
C100
S126
C106
C107
F142
18
OR/DG
LEAK DETECTION PUMP
K107
20
OR/PK
K106
20
WT/DG
K107
18
OR/PK
K106
18
WT/DG
30 C2
1 C3
22 C3
25 C3
14 C3
10 C3
TRANSMISSION CONTROL RELAY CONTROL
A/C COMPRESSOR CLUTCH RELAY CONTROL
A/C PRESSURE SIGNAL
GENERATOR SOURCE
LEAK DETECTION PUMP SWITCH SENSE
LEAK DETECTION PUMP SOLENOID CONTROL
POWERTRAIN CONTROL MODULE

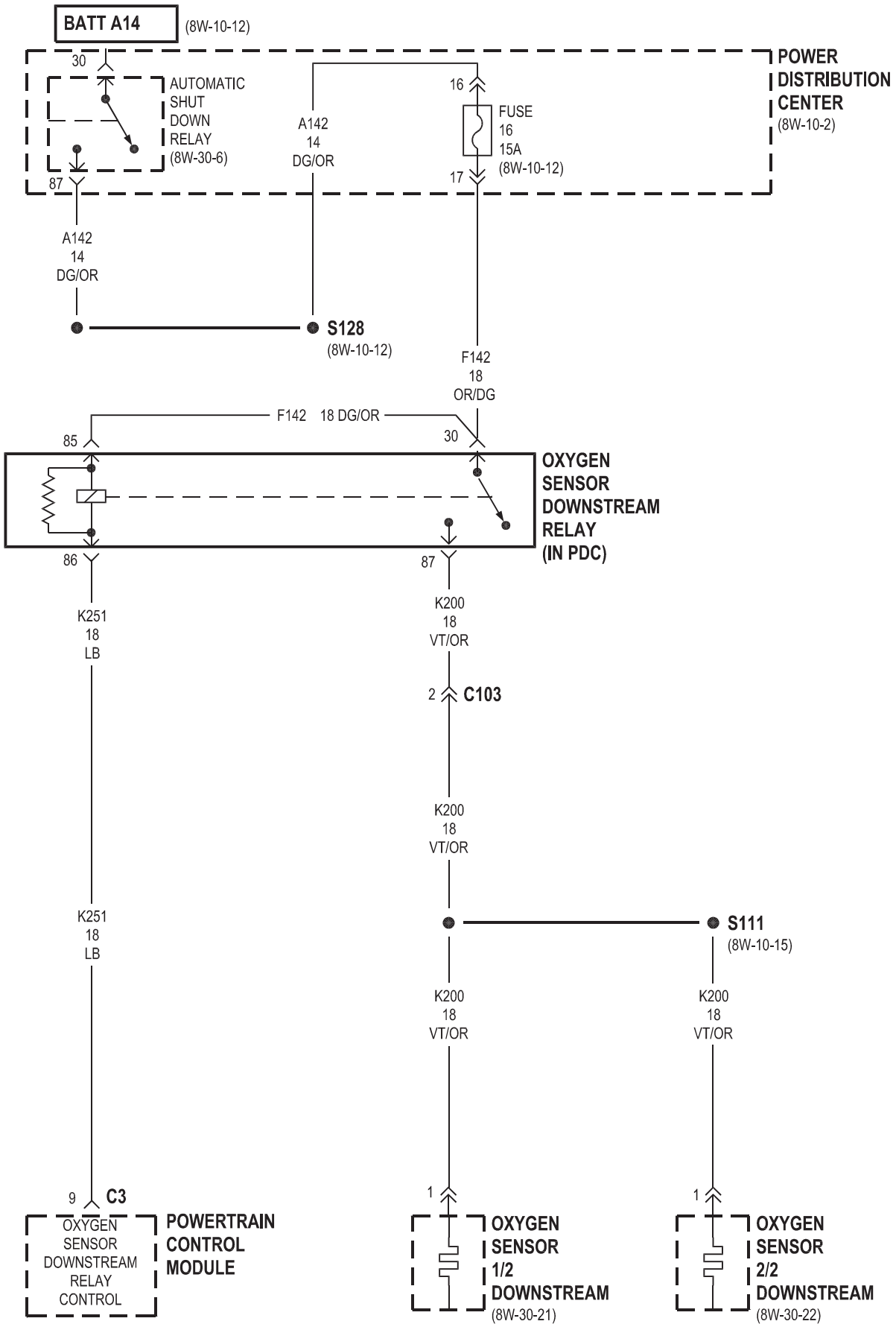
BATT A14
(8W-10-12)
30
AUTOMATIC SHUT DOWN RELAY (8W-30-6)
87
A142 14 DG/OR
16
FUSE 16 15A (8W-10-12)
17
POWER DISTRIBUTION CENTER (8W-10-2)
A142 14 DG/OR
S128
(8W-10-12)
F142 18 OR/DG
F142 18 DG/OR
85
30
OXYGEN SENSOR DOWNSTREAM RELAY (IN PDC)
86
87
K251 18 LB
K200 18 VT/OR
2
C103
K200 18 VT/OR
K251 18 LB
S111
(8W-10-15)
K200 18 VT/OR
K200 18 VT/OR
9
C3
OXYGEN SENSOR DOWNSTREAM RELAY CONTROL
POWERTRAIN CONTROL MODULE
1
OXYGEN SENSOR 1/2 DOWNSTREAM
(8W-30-21)
1
OXYGEN SENSOR 2/2 DOWNSTREAM
(8W-30-22)

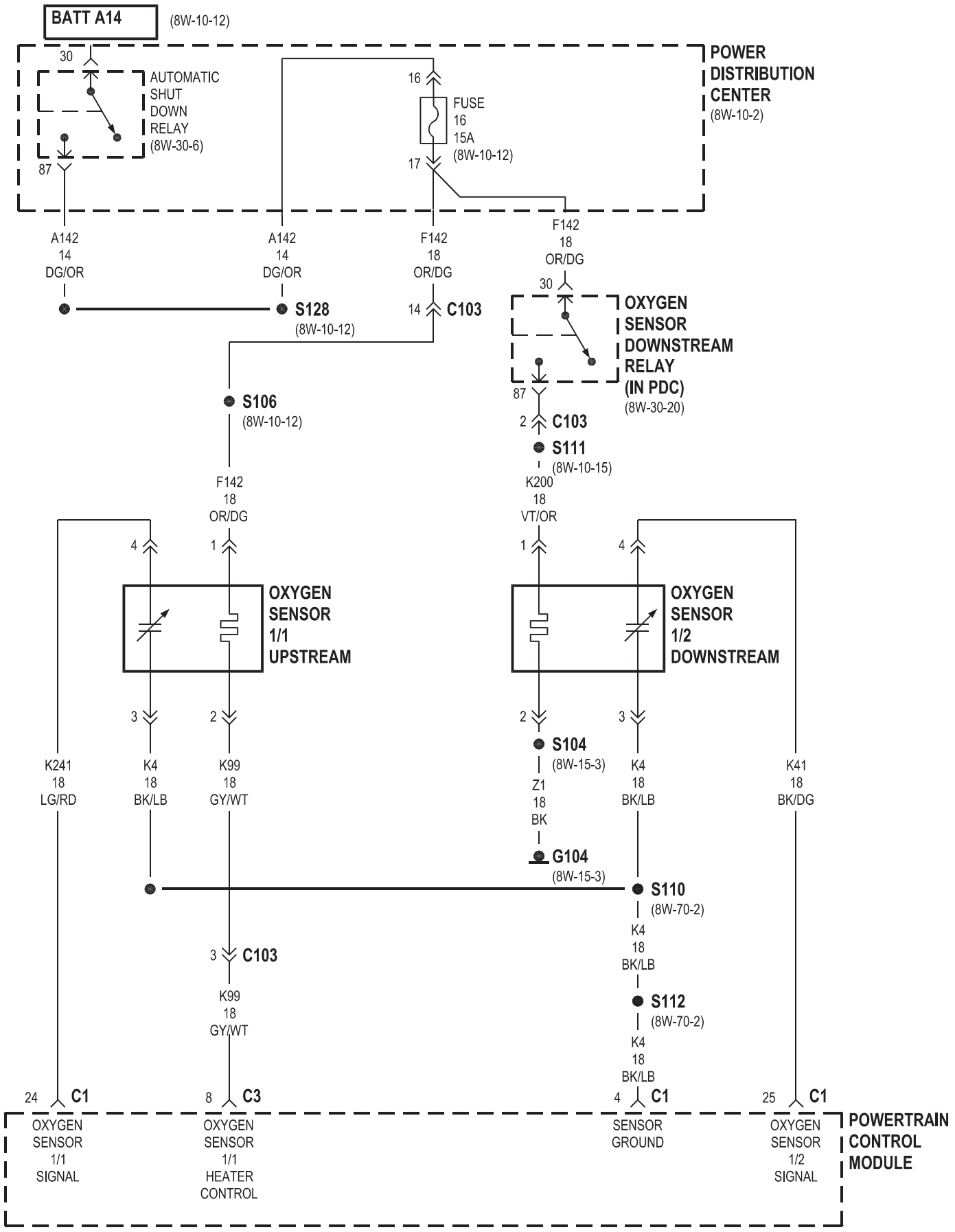
BATT A14
(8W-10-12)
POWER DISTRIBUTION CENTER
(8W-10-2)
AUTOMATIC SHUT DOWN RELAY
(8W-30-6)
FUSE 16 15A
(8W-10-12)
A142 14 DG/OR
A142 14 DG/OR
F142 18 OR/DG
F142 18 OR/DG
S128
(8W-10-12)
C103
OXYGEN SENSOR DOWNSTREAM RELAY (IN PDC)
(8W-30-20)
S106
(8W-10-12)
C103
S111
(8W-10-15)
F142 18 OR/DG
K200 18 VT/OR
OXYGEN SENSOR 1/1 UPSTREAM
OXYGEN SENSOR 1/2 DOWNSTREAM
S104
(8W-15-3)
K241 18 LG/RD
K4 18 BK/LB
K99 18 GY/WT
Z1 18 BK
K4 18 BK/LB
K41 18 BK/DG
G104
(8W-15-3)
S110
(8W-70-2)
C103
K4 18 BK/LB
K99 18 GY/WT
S112
(8W-70-2)
K4 18 BK/LB
C1
C3
C1
C1
OXYGEN SENSOR 1/1 SIGNAL
OXYGEN SENSOR 1/1 HEATER CONTROL
SENSOR GROUND
OXYGEN SENSOR 1/2 SIGNAL
POWERTRAIN CONTROL MODULE

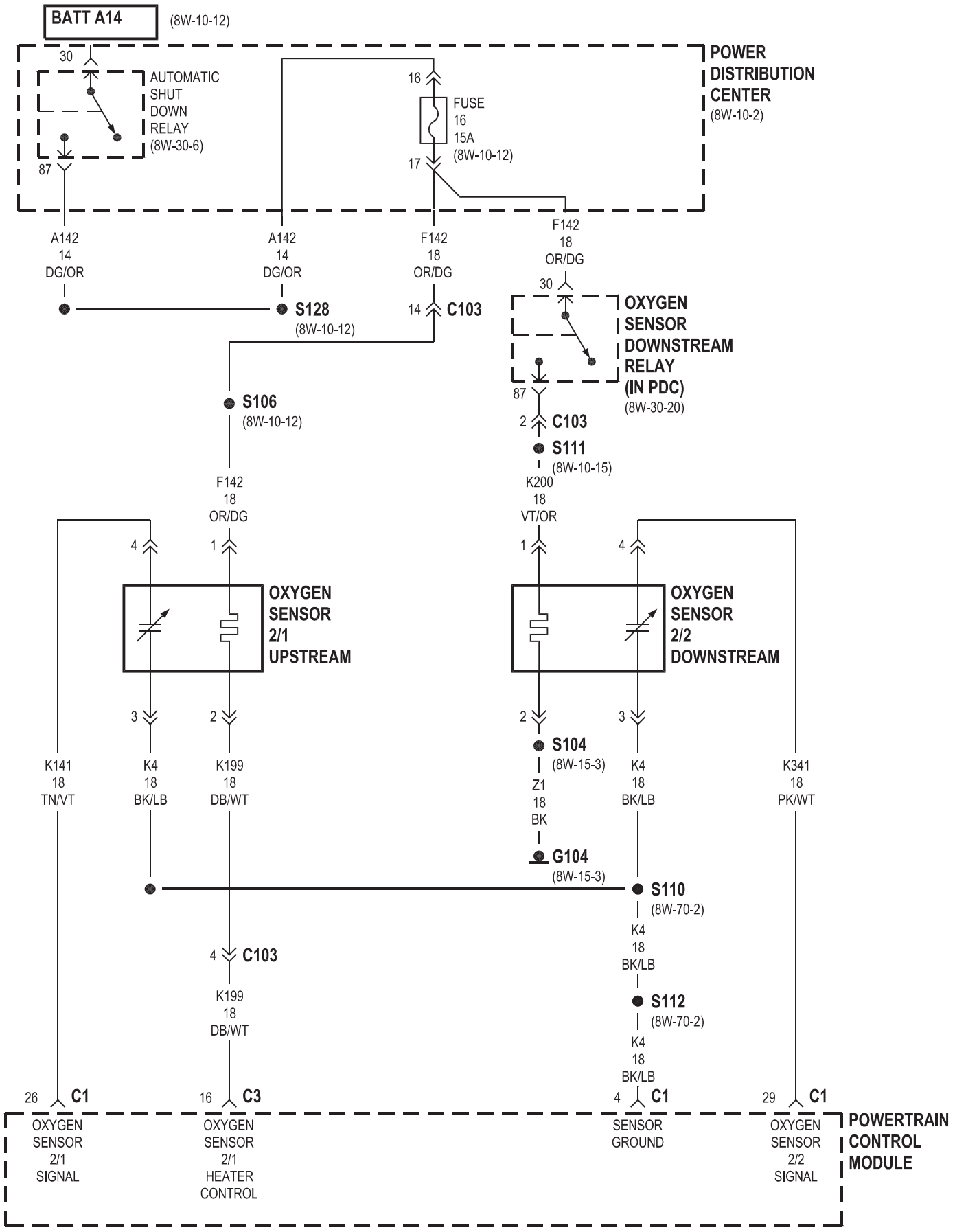
BATT A14
(8W-10-12)
POWER DISTRIBUTION CENTER
(8W-10-2)
AUTOMATIC SHUT DOWN RELAY
(8W-30-6)
FUSE 16 15A
(8W-10-12)
A142 14 DG/OR
A142 14 DG/OR
F142 18 OR/DG
F142 18 OR/DG
S128
(8W-10-12)
C103
OXYGEN SENSOR DOWNSTREAM RELAY (IN PDC)
(8W-30-20)
S106
(8W-10-12)
C103
S111
(8W-10-15)
K200 18 VT/OR
F142 18 OR/DG
OXYGEN SENSOR 2/1 UPSTREAM
OXYGEN SENSOR 2/2 DOWNSTREAM
S104
(8W-15-3)
Z1 18 BK
G104
(8W-15-3)
K141 18 TN/VT
K4 18 BK/LB
K199 18 DB/WT
K4 18 BK/LB
K341 18 PK/WT
S110
(8W-70-2)
K4 18 BK/LB
C103
K199 18 DB/WT
S112
(8W-70-2)
K4 18 BK/LB
C1
C3
C1
C1
OXYGEN SENSOR 2/1 SIGNAL
OXYGEN SENSOR 2/1 HEATER CONTROL
SENSOR GROUND
OXYGEN SENSOR 2/2 SIGNAL
POWERTRAIN CONTROL MODULE

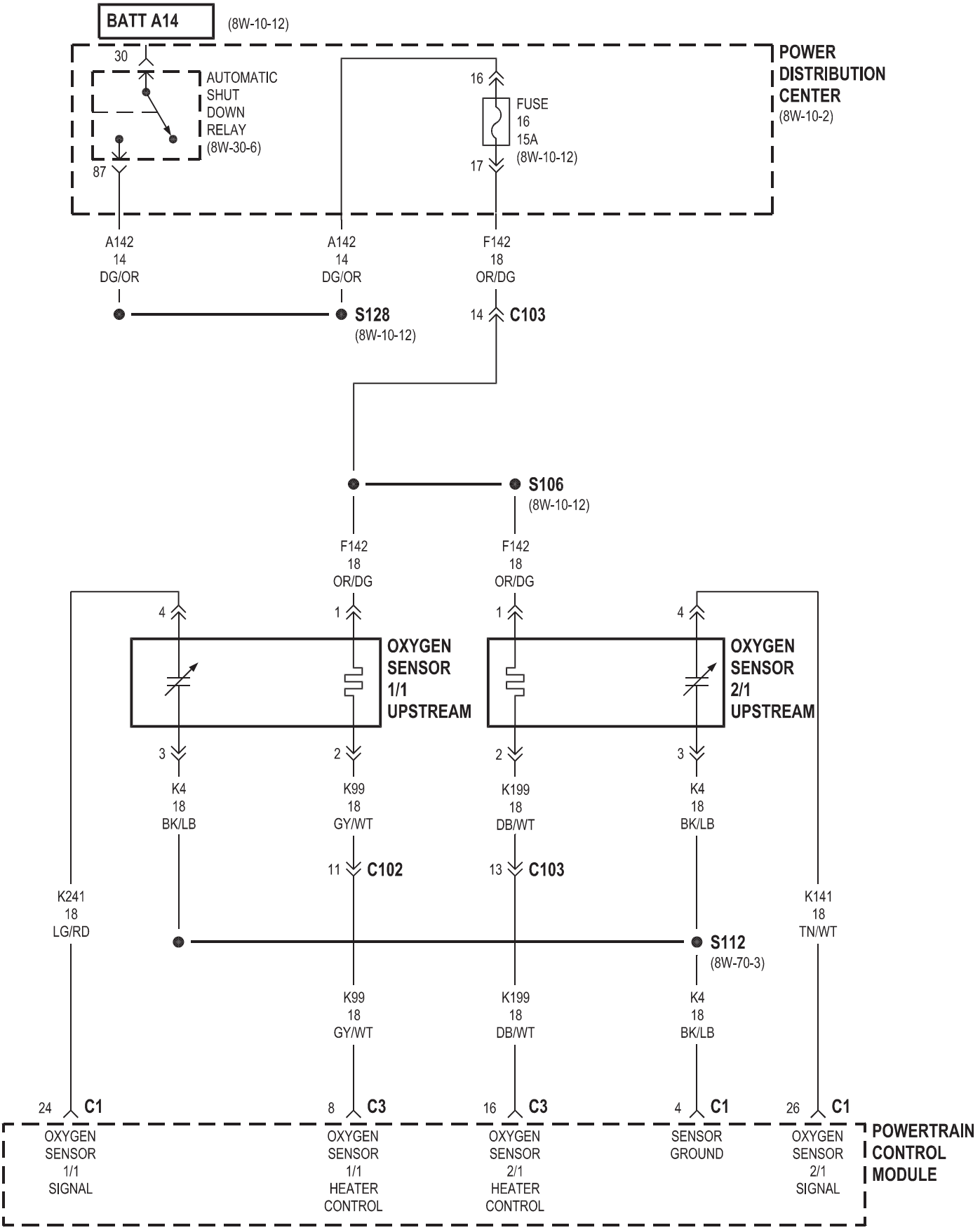
BATT A14
(8W-10-12)
30
AUTOMATIC
SHUT
DOWN
RELAY
(8W-30-6)
87
16
FUSE
16
15A
(8W-10-12)
17
POWER
DISTRIBUTION
CENTER
(8W-10-2)
A142
14
DG/OR
A142
14
DG/OR
F142
18
OR/DG
S128
(8W-10-12)
14
C103
S106
(8W-10-12)
F142
18
OR/DG
F142
18
OR/DG
4
1
1
4
OXYGEN
SENSOR
1/1
UPSTREAM
OXYGEN
SENSOR
2/1
UPSTREAM
3
2
2
3
K4
18
BK/LB
K99
18
GY/WT
K199
18
DB/WT
K4
18
BK/LB
11
C102
13
C103
K241
18
LG/RD
K141
18
TN/WT
S112
(8W-70-3)
K99
18
GY/WT
K199
18
DB/WT
K4
18
BK/LB
24
C1
8
C3
16
C3
4
C1
26
C1
OXYGEN
SENSOR
1/1
SIGNAL
OXYGEN
SENSOR
1/1
HEATER
CONTROL
OXYGEN
SENSOR
2/1
HEATER
CONTROL
SENSOR
GROUND
OXYGEN
SENSOR
2/1
SIGNAL
POWERTRAIN
CONTROL
MODULE

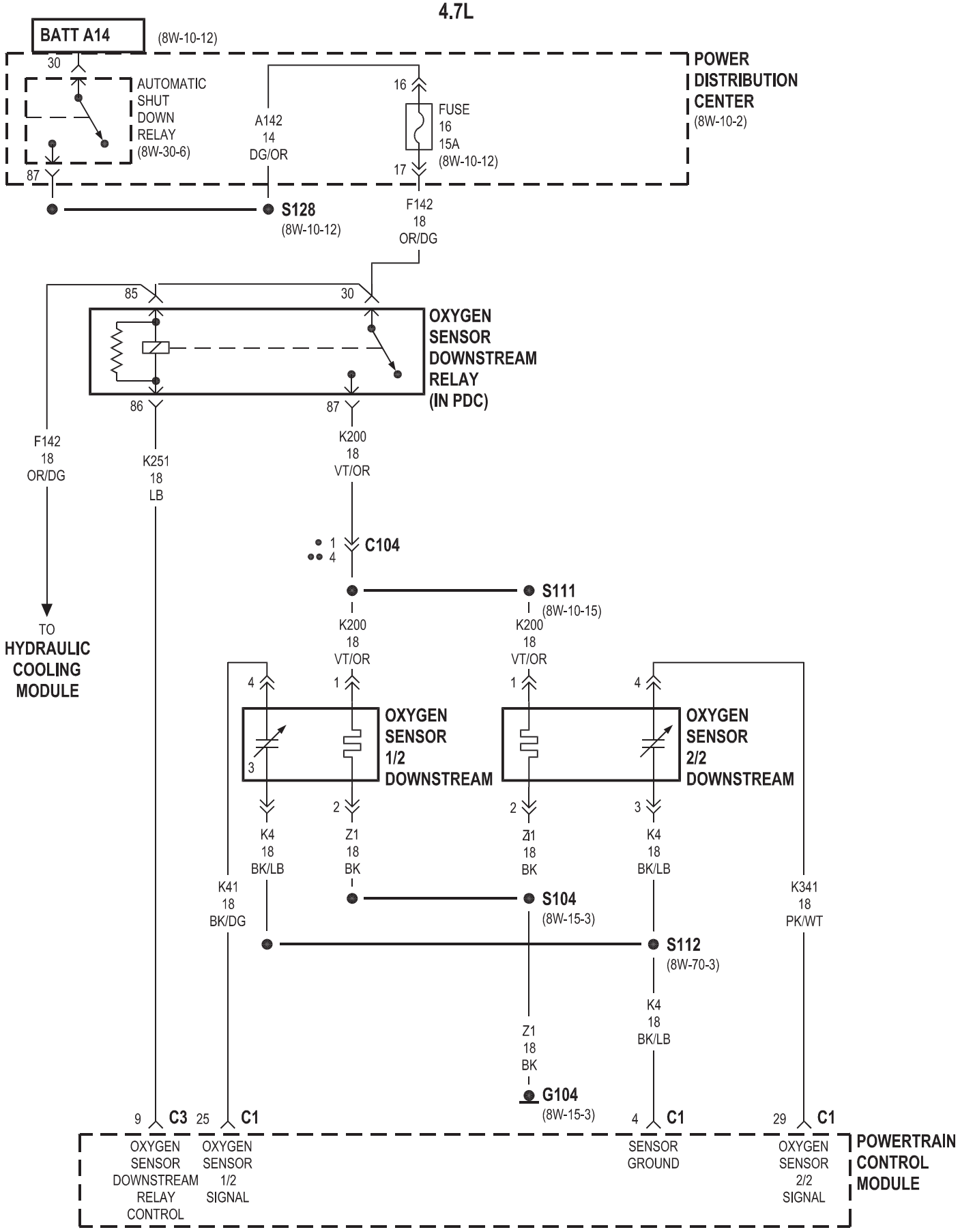

• EXCEPT HIGH OUTPUT
•• HIGH OUTPUT

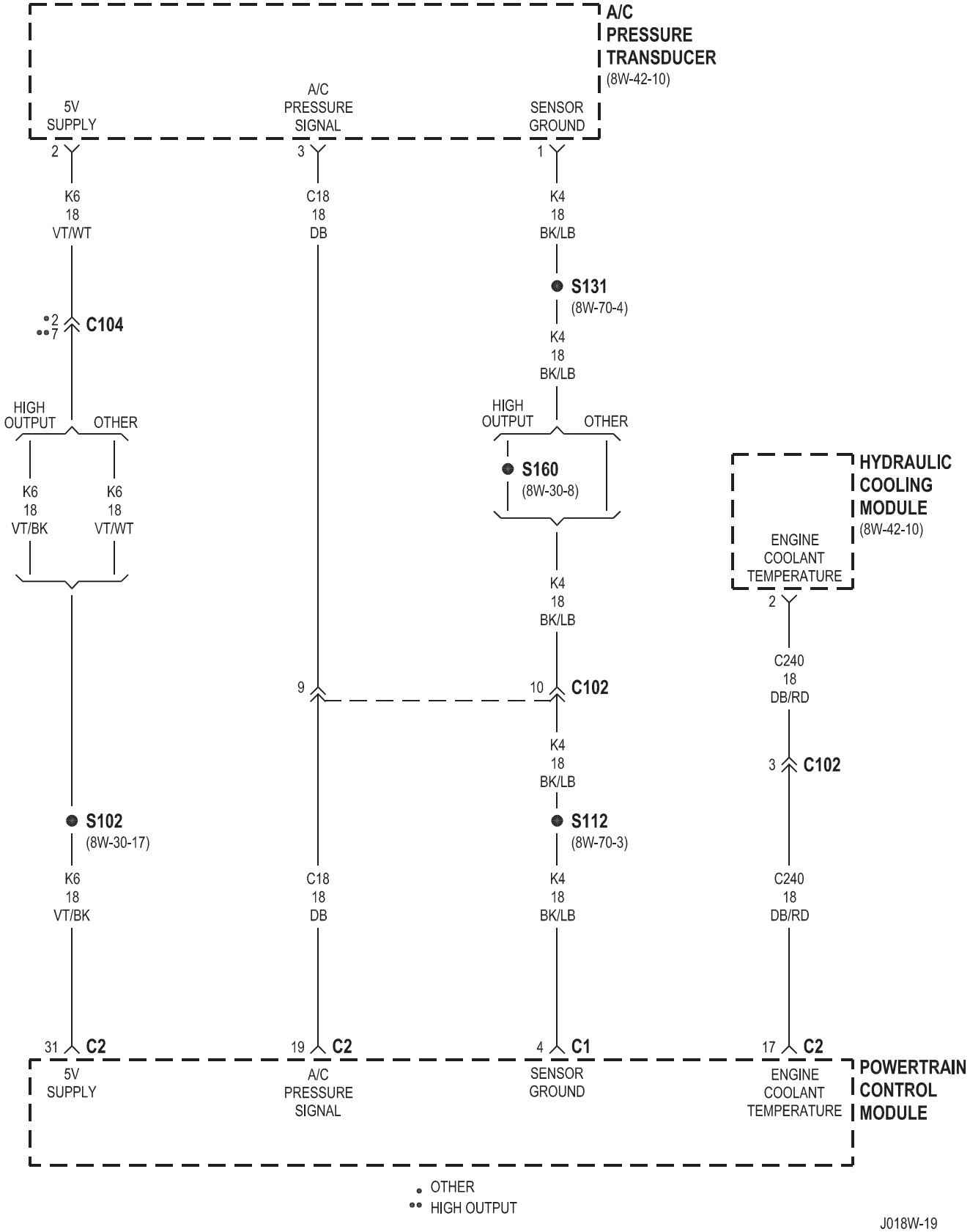
A/C PRESSURE TRANSDUCER
(8W-42-10)
5V SUPPLY
A/C PRESSURE SIGNAL
SENSOR GROUND
2
3
1
K6 18 VT/WT
C18 18 DB
K4 18 BK/LB
S131
(8W-70-4)
K4 18 BK/LB
2
7
C104
HIGH OUTPUT
OTHER
HIGH OUTPUT
OTHER
S160
(8W-30-8)
K6 18 VT/BK
K6 18 VT/WT
HYDRAULIC COOLING MODULE
(8W-42-10)
ENGINE COOLANT TEMPERATURE
2
K4 18 BK/LB
C240 18 DB/RD
9
10
C102
K4 18 BK/LB
3
C102
S102
(8W-30-17)
S112
(8W-70-3)
K6 18 VT/BK
C18 18 DB
K4 18 BK/LB
C240 18 DB/RD
31
C2
19
C2
4
C1
17
C2
5V SUPPLY
A/C PRESSURE SIGNAL
SENSOR GROUND
ENGINE COOLANT TEMPERATURE
POWERTRAIN CONTROL MODULE
OTHER
HIGH OUTPUT

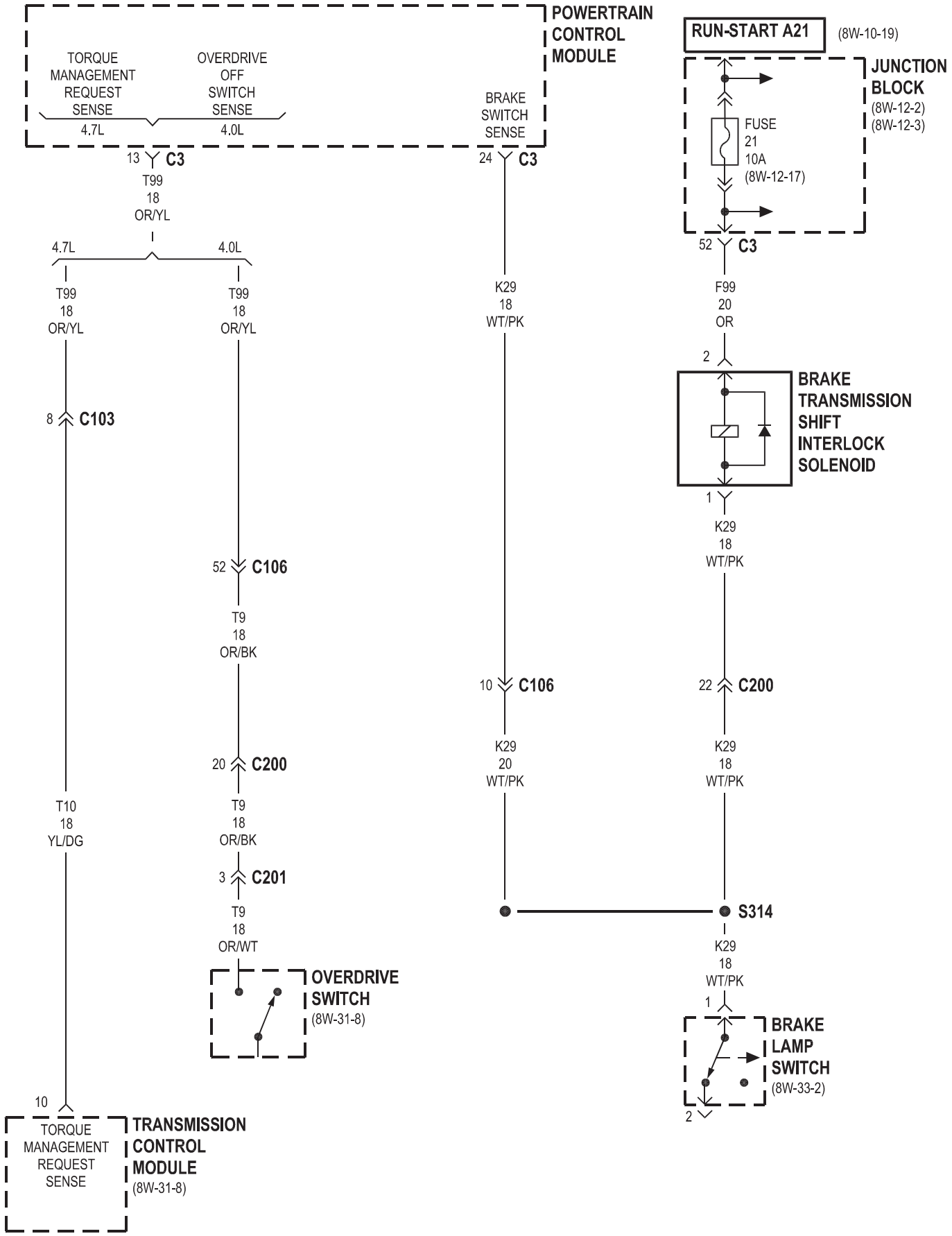
POWERTRAIN CONTROL MODULE
TORQUE MANAGEMENT REQUEST SENSE
4.7L
OVERDRIVE OFF SWITCH SENSE
4.0L
BRAKE SWITCH SENSE
13 C3
24 C3
T99
18
OR/YL
4.7L
4.0L
T99
18
OR/YL
T99
18
OR/YL
8 C103
52 C106
T9
18
OR/BK
20 C200
T9
18
OR/BK
3 C201
T9
18
OR/WT
T10
18
YL/DG
10
TORQUE MANAGEMENT REQUEST SENSE
TRANSMISSION CONTROL MODULE
(8W-31-8)
OVERDRIVE SWITCH
(8W-31-8)
K29
18
WT/PK
10 C106
K29
20
WT/PK
RUN-START A21
(8W-10-19)
JUNCTION BLOCK
(8W-12-2)
(8W-12-3)
FUSE
21
10A
(8W-12-17)
52 C3
F99
20
OR
2
BRAKE TRANSMISSION SHIFT INTERLOCK SOLENOID
1
K29
18
WT/PK
22 C200
K29
18
WT/PK
S314
K29
18
WT/PK
1
BRAKE LAMP SWITCH
(8W-33-2)
2

8W-31 TRANSMISSION CONTROL SYSTEM

Component	Page
Automatic Shut Down Relay	8W-31-3
Controller Antilock Brake	8W-31-6
Crankshaft Position Sensor	8W-31-8
Data Link Connector	8W-31-8
Diagnostic Junction Port	8W-31-3
Engine Starter Motor Relay	8W-31-3, 4, 5, 10
Fuel Pump Relay	8W-31-3
Fuse 5 (PDC)	8W-31-2
Fuse 28 (PDC)	8W-31-2, 7
Fuse 12 (JB)	8W-31-3
Fuse 20 (JB)	8W-31-4, 5
Fuse 31 (JB)	8W-31-3
G102	8W-31-9, 11
G104	8W-31-5
G108	8W-31-2
G200	8W-31-8
Generator	8W-31-2
Input Speed Sensor	8W-31-11
Instrument Cluster	8W-31-5, 6
Junction Block	8W-31-3, 4, 5, 6
Left Rear Lamp Assembly	8W-31-4, 5
Line Pressure Sensor	8W-31-11
Output Speed Sensor	8W-31-7, 11
Overdrive Switch	8W-31-8
Park/Neutral Position Switch	8W-31-5
Power Distribution Center	8W-31-2, 7
Powertrain Control Module	8W-31-2, 3, 4, 5, 6, 7, 8
Right Rear Lamp Assembly	8W-31-4, 5
Throttle Position Sensor	8W-31-6
Transfer Case Switch	8W-31-5
Transmission Control Module	8W-31-2, 3, 6, 8, 9, 10, 11
Transmission Control Relay	8W-31-2, 7, 9, 10
Transmission Solenoid	8W-31-2, 7
Transmission Solenoid/TRS Assembly	8W-31-2, 4, 9, 10, 11

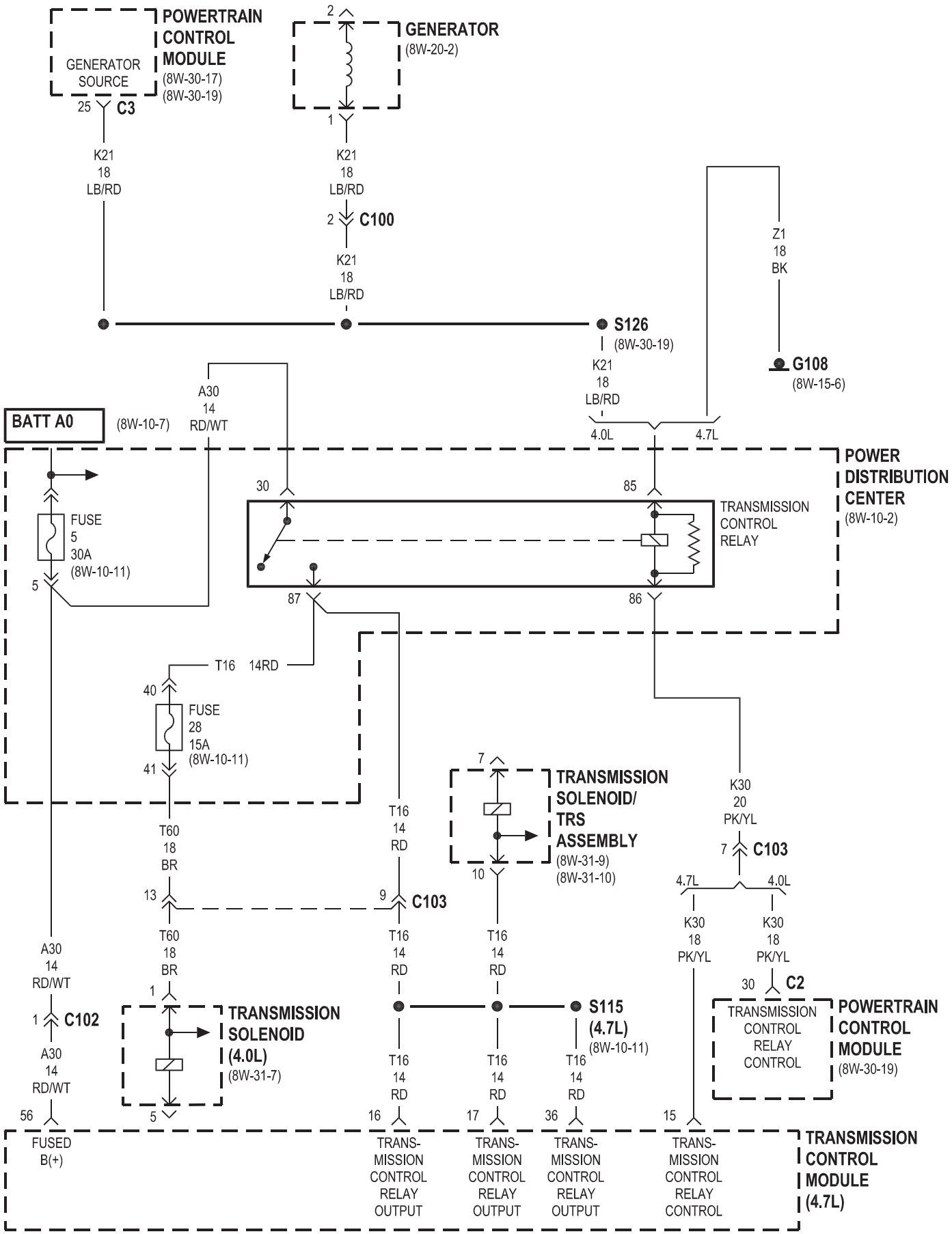
POWERTRAIN CONTROL MODULE
(8W-30-17)
(8W-30-19)
GENERATOR SOURCE
25
C3
K21
18
LB/RD
2
GENERATOR
(8W-20-2)
1
K21
18
LB/RD
2
C100
K21
18
LB/RD
S126
(8W-30-19)
K21
18
LB/RD
4.0L
4.7L
Z1
18
BK
G108
(8W-15-6)
BATT A0
(8W-10-7)
A30
14
RD/WT
30
85
TRANSMISSION CONTROL RELAY
POWER DISTRIBUTION CENTER
(8W-10-2)
FUSE
5
30A
(8W-10-11)
5
87
86
T16
14RD
40
FUSE
28
15A
(8W-10-11)
41
T60
18
BR
13
T16
14
RD
9
C103
7
TRANSMISSION SOLENOID/ TRS ASSEMBLY
(8W-31-9)
(8W-31-10)
10
K30
20
PK/YL
7
C103
4.7L
4.0L
K30
18
PK/YL
K30
18
PK/YL
30
C2
A30
14
RD/WT
1
C102
A30
14
RD/WT
56
FUSED B(+)
1
TRANSMISSION SOLENOID (4.0L)
(8W-31-7)
5
T60
18
BR
T16
14
RD
T16
14
RD
T16
14
RD
16
17
S115
(4.7L)
(8W-10-11)
T16
14
RD
36
T16
14
RD
15
TRANSMISSION CONTROL RELAY CONTROL
POWERTRAIN CONTROL MODULE
(8W-30-19)
TRANS-MISSION CONTROL RELAY OUTPUT
TRANS-MISSION CONTROL RELAY OUTPUT
TRANS-MISSION CONTROL RELAY OUTPUT
TRANS-MISSION CONTROL RELAY CONTROL
TRANSMISSION CONTROL MODULE (4.7L)

4.7L

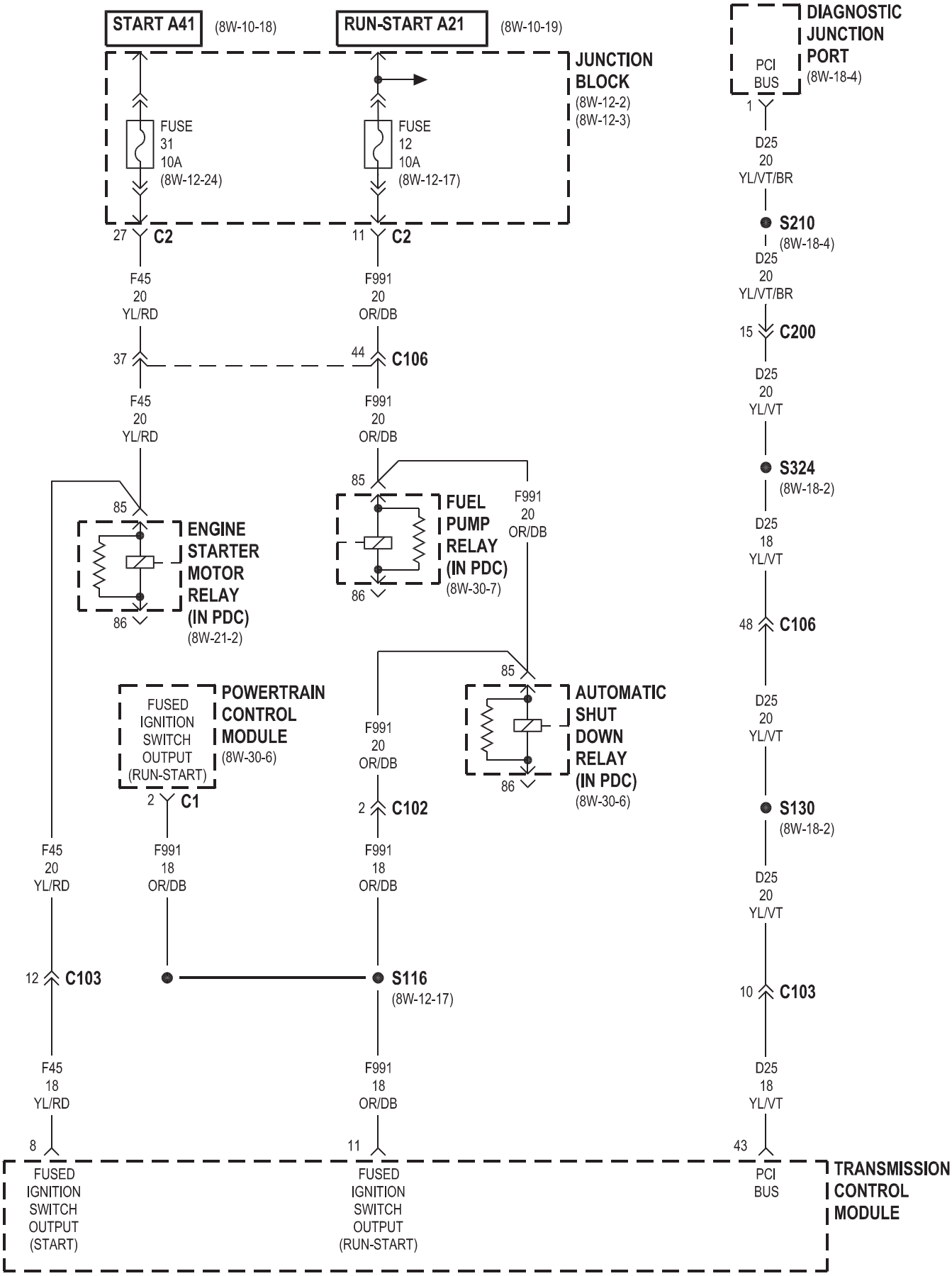
START A41
(8W-10-18)
RUN-START A21
(8W-10-19)
JUNCTION BLOCK
(8W-12-2)
(8W-12-3)
FUSE 31 10A (8W-12-24)
FUSE 12 10A (8W-12-17)
27 C2
11 C2
F45 20 YL/RD
F991 20 OR/DB
37
44 C106
F45 20 YL/RD
F991 20 OR/DB
85
86
ENGINE STARTER MOTOR RELAY (IN PDC)
(8W-21-2)
FUEL PUMP RELAY (IN PDC)
(8W-30-7)
F991 20 OR/DB
POWERTRAIN CONTROL MODULE
(8W-30-6)
FUSED IGNITION SWITCH OUTPUT (RUN-START)
2 C1
2 C102
AUTOMATIC SHUT DOWN RELAY (IN PDC)
(8W-30-6)
F45 20 YL/RD
F991 18 OR/DB
F991 18 OR/DB
12 C103
S116
(8W-12-17)
F45 18 YL/RD
F991 18 OR/DB
8
11
FUSED IGNITION SWITCH OUTPUT (START)
FUSED IGNITION SWITCH OUTPUT (RUN-START)
DIAGNOSTIC JUNCTION PORT
(8W-18-4)
PCI BUS
1
D25 20 YL/VT/BR
S210
(8W-18-4)
D25 20 YL/VT/BR
15 C200
D25 20 YL/VT
S324
(8W-18-2)
D25 18 YL/VT
48 C106
D25 20 YL/VT
S130
(8W-18-2)
D25 20 YL/VT
10 C103
D25 18 YL/VT
43
PCI BUS
TRANSMISSION CONTROL MODULE

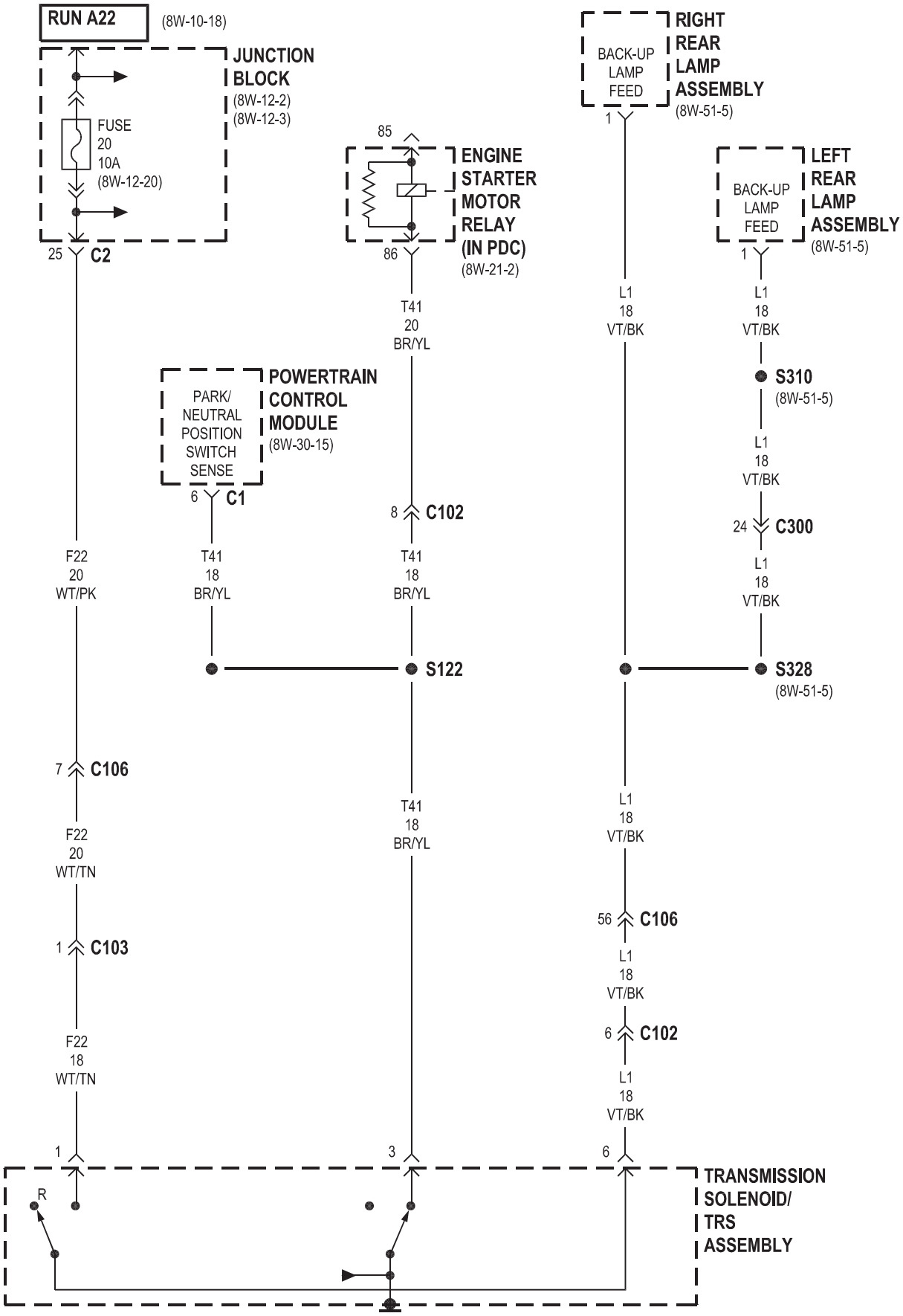
RUN A22
(8W-10-18)
JUNCTION BLOCK
(8W-12-2)
(8W-12-3)
FUSE 20 10A
(8W-12-20)
25
C2
85
ENGINE STARTER MOTOR RELAY (IN PDC)
(8W-21-2)
86
T41 20 BR/YL
BACK-UP LAMP FEED
RIGHT REAR LAMP ASSEMBLY
(8W-51-5)
1
L1 18 VT/BK
BACK-UP LAMP FEED
LEFT REAR LAMP ASSEMBLY
(8W-51-5)
1
L1 18 VT/BK
S310
(8W-51-5)
L1 18 VT/BK
24
C300
L1 18 VT/BK
PARK/ NEUTRAL POSITION SWITCH SENSE
POWERTRAIN CONTROL MODULE
(8W-30-15)
6
C1
8
C102
F22 20 WT/PK
T41 18 BR/YL
T41 18 BR/YL
S122
S328
(8W-51-5)
7
C106
F22 20 WT/TN
T41 18 BR/YL
L1 18 VT/BK
56
C106
L1 18 VT/BK
1
C103
6
C102
F22 18 WT/TN
L1 18 VT/BK
1
3
6
R
TRANSMISSION SOLENOID/ TRS ASSEMBLY

4.0L

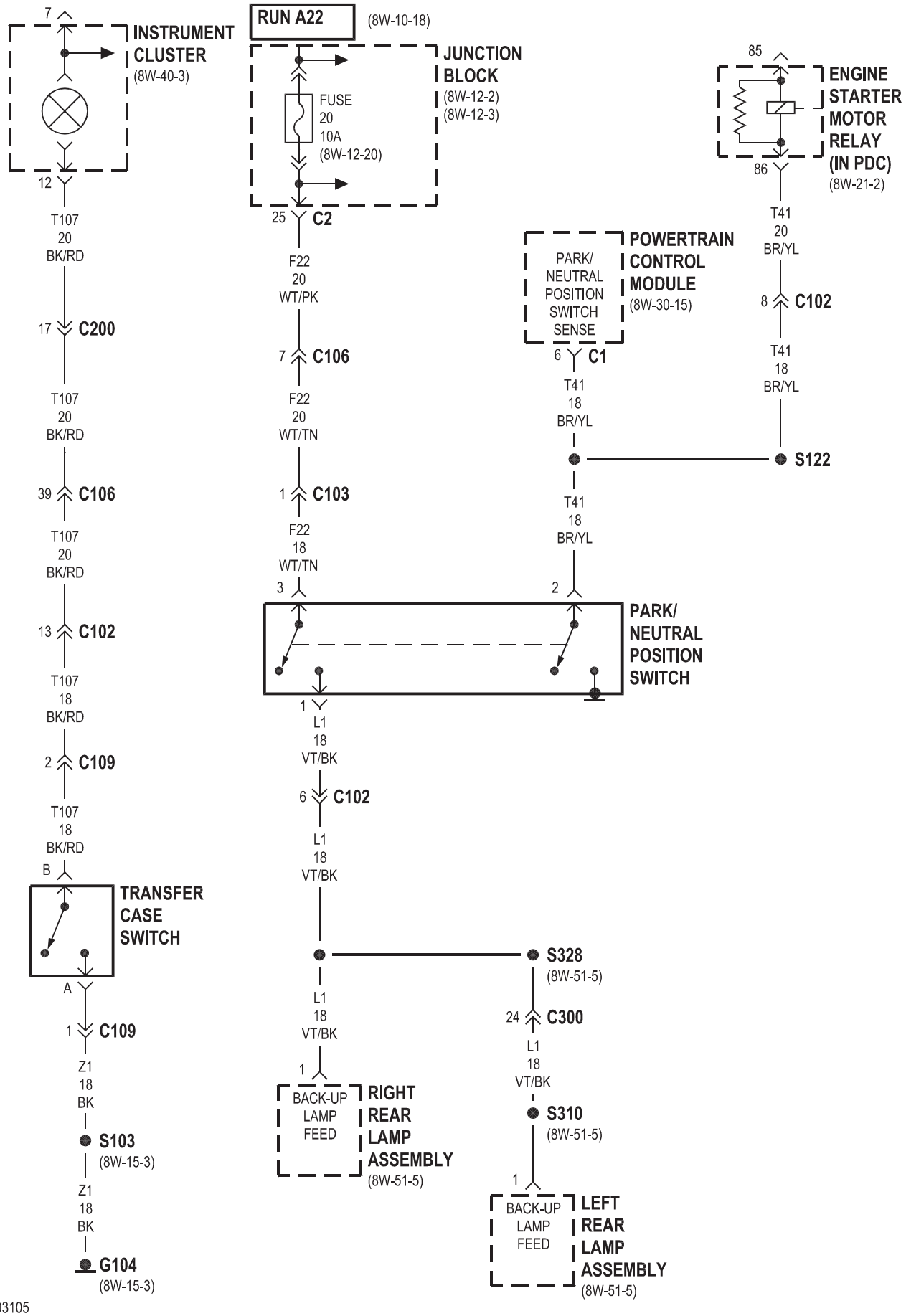
RUN A22
(8W-10-18)
INSTRUMENT CLUSTER
(8W-40-3)
JUNCTION BLOCK
(8W-12-2)
(8W-12-3)
FUSE 20 10A
(8W-12-20)
ENGINE STARTER MOTOR RELAY (IN PDC)
(8W-21-2)
POWERTRAIN CONTROL MODULE
(8W-30-15)
PARK/ NEUTRAL POSITION SWITCH SENSE
PARK/ NEUTRAL POSITION SWITCH
TRANSFER CASE SWITCH
RIGHT REAR LAMP ASSEMBLY
(8W-51-5)
LEFT REAR LAMP ASSEMBLY
(8W-51-5)
BACK-UP LAMP FEED
7
12
T107 20 BK/RD
17 C200
T107 20 BK/RD
39 C106
T107 20 BK/RD
13 C102
T107 18 BK/RD
2 C109
T107 18 BK/RD
B
A
1 C109
Z1 18 BK
S103
(8W-15-3)
Z1 18 BK
G104
(8W-15-3)
25 C2
F22 20 WT/PK
7 C106
F22 20 WT/TN
1 C103
F22 18 WT/TN
3
2
1 L1 18 VT/BK
6 C102
L1 18 VT/BK
S328
(8W-51-5)
L1 18 VT/BK
24 C300
L1 18 VT/BK
S310
(8W-51-5)
1
85
86
T41 20 BR/YL
8 C102
T41 18 BR/YL
S122
6 C1
T41 18 BR/YL
T41 18 BR/YL

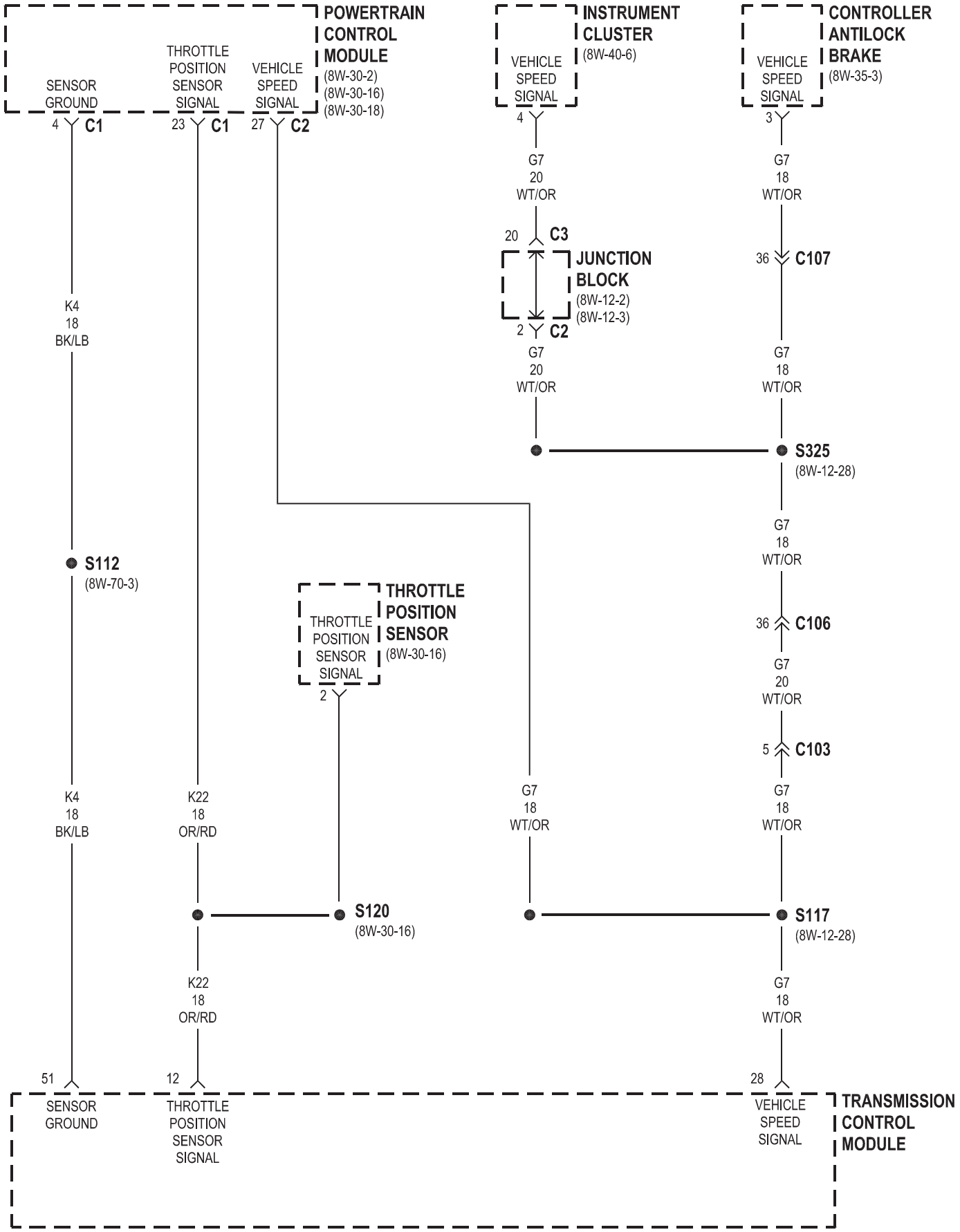
POWERTRAIN CONTROL MODULE
(8W-30-2)
(8W-30-16)
(8W-30-18)
SENSOR GROUND
THROTTLE POSITION SENSOR SIGNAL
VEHICLE SPEED SIGNAL
4 C1
23 C1
27 C2
INSTRUMENT CLUSTER
(8W-40-6)
VEHICLE SPEED SIGNAL
4
CONTROLLER ANTILOCK BRAKE
(8W-35-3)
VEHICLE SPEED SIGNAL
3
G7 20 WT/OR
G7 18 WT/OR
20 C3
JUNCTION BLOCK
(8W-12-2)
(8W-12-3)
2 C2
36 C107
K4 18 BK/LB
G7 20 WT/OR
G7 18 WT/OR
S325
(8W-12-28)
G7 18 WT/OR
S112
(8W-70-3)
THROTTLE POSITION SENSOR
(8W-30-16)
THROTTLE POSITION SENSOR SIGNAL
2
36 C106
G7 20 WT/OR
5 C103
K4 18 BK/LB
K22 18 OR/RD
G7 18 WT/OR
G7 18 WT/OR
S120
(8W-30-16)
S117
(8W-12-28)
K22 18 OR/RD
G7 18 WT/OR
51
12
28
SENSOR GROUND
THROTTLE POSITION SENSOR SIGNAL
VEHICLE SPEED SIGNAL
TRANSMISSION CONTROL MODULE

4.0L

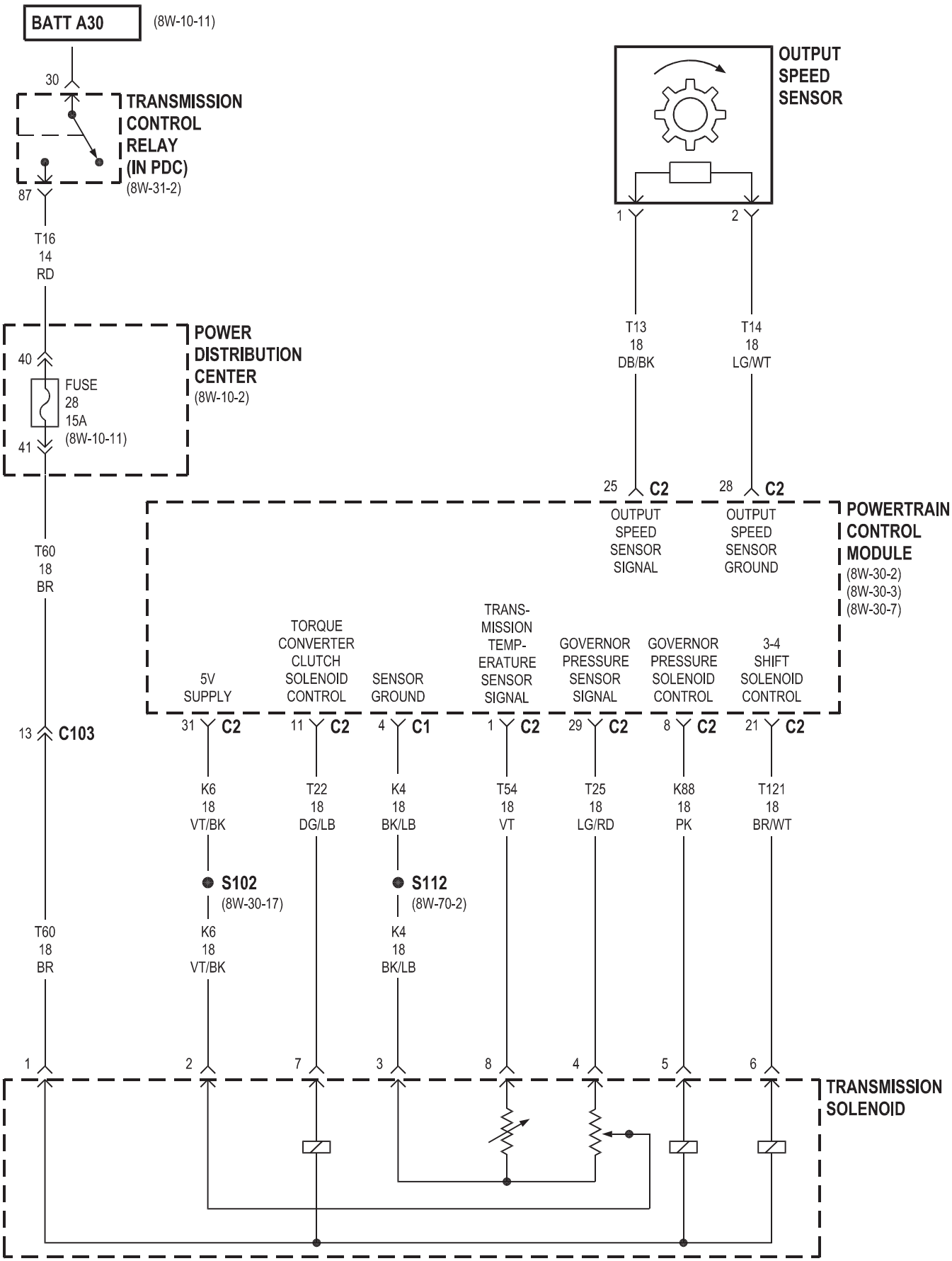
BATT A30
(8W-10-11)
30
TRANSMISSION CONTROL RELAY (IN PDC)
(8W-31-2)
87
T16
14
RD
OUTPUT SPEED SENSOR
1
2
T13
18
DB/BK
T14
18
LG/WT
POWER DISTRIBUTION CENTER
(8W-10-2)
40
FUSE
28
15A
(8W-10-11)
41
25 C2
28 C2
OUTPUT SPEED SENSOR SIGNAL
OUTPUT SPEED SENSOR GROUND
POWERTRAIN CONTROL MODULE
(8W-30-2)
(8W-30-3)
(8W-30-7)
T60
18
BR
5V SUPPLY
TORQUE CONVERTER CLUTCH SOLENOID CONTROL
SENSOR GROUND
TRANS-MISSION TEMP-ERATURE SENSOR SIGNAL
GOVERNOR PRESSURE SENSOR SIGNAL
GOVERNOR PRESSURE SOLENOID CONTROL
3-4 SHIFT SOLENOID CONTROL
13 C103
31 C2
11 C2
4 C1
1 C2
29 C2
8 C2
21 C2
K6
18
VT/BK
T22
18
DG/LB
K4
18
BK/LB
T54
18
VT
T25
18
LG/RD
K88
18
PK
T121
18
BR/WT
S102
(8W-30-17)
S112
(8W-70-2)
T60
18
BR
K6
18
VT/BK
K4
18
BK/LB
1
2
7
3
8
4
5
6
TRANSMISSION SOLENOID

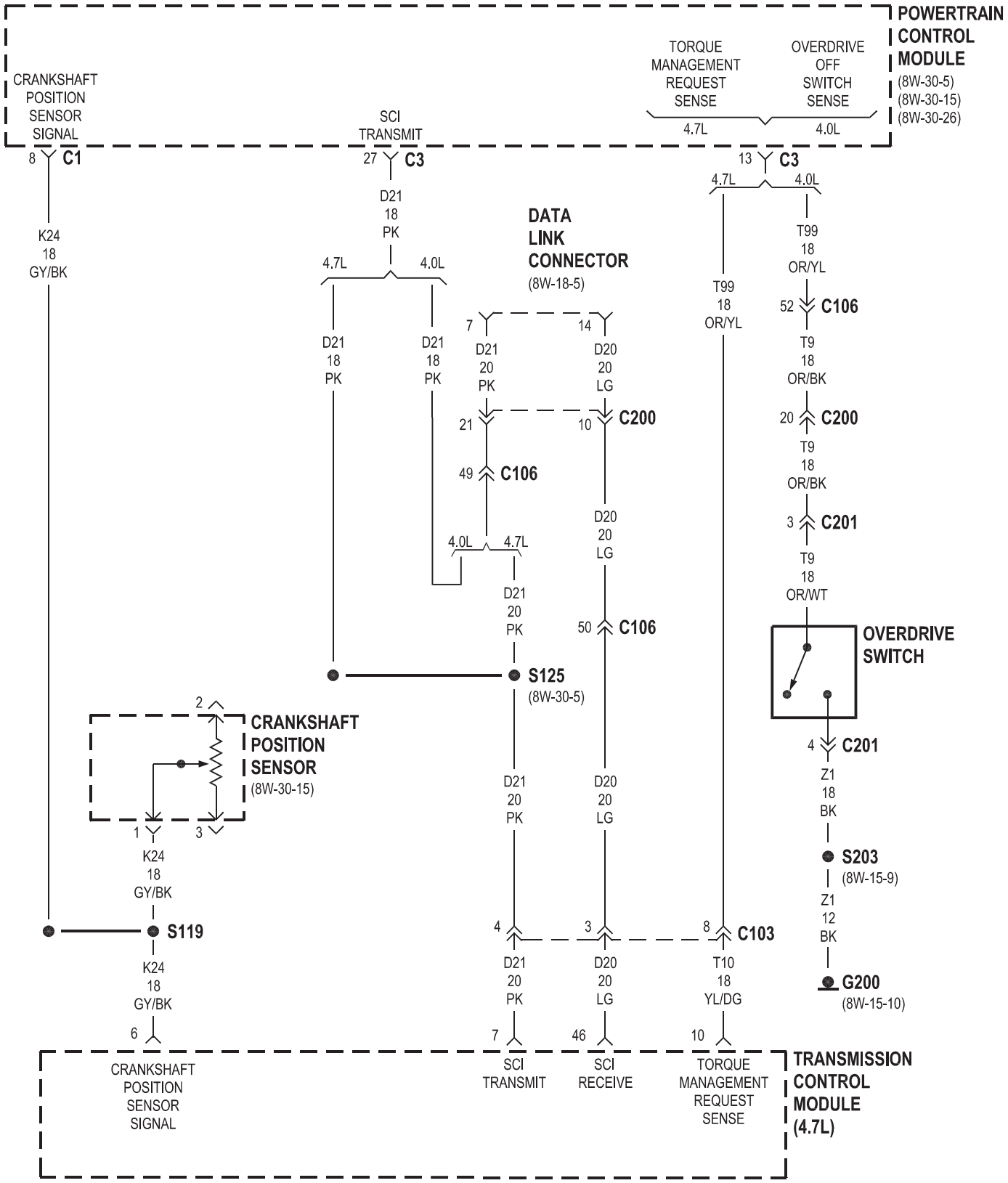
POWERTRAIN CONTROL MODULE
(8W-30-5)
(8W-30-15)
(8W-30-26)
CRANKSHAFT POSITION SENSOR SIGNAL
SCI TRANSMIT
TORQUE MANAGEMENT REQUEST SENSE
OVERDRIVE OFF SWITCH SENSE
4.7L
4.0L
8 C1
27 C3
13 C3
K24 18 GY/BK
D21 18 PK
DATA LINK CONNECTOR
(8W-18-5)
T99 18 OR/YL
52 C106
7
14
D21 20 PK
D20 20 LG
21
10 C200
49 C106
T9 18 OR/BK
20 C200
3 C201
T9 18 OR/WT
50 C106
S125
(8W-30-5)
OVERDRIVE SWITCH
4 C201
Z1 18 BK
S203
(8W-15-9)
Z1 12 BK
G200
(8W-15-10)
CRANKSHAFT POSITION SENSOR
(8W-30-15)
2
1
3
S119
4
3
8 C103
T10 18 YL/DG
6
7
46
10
CRANKSHAFT POSITION SENSOR SIGNAL
SCI TRANSMIT
SCI RECEIVE
TORQUE MANAGEMENT REQUEST SENSE
TRANSMISSION CONTROL MODULE (4.7L)

4.7L

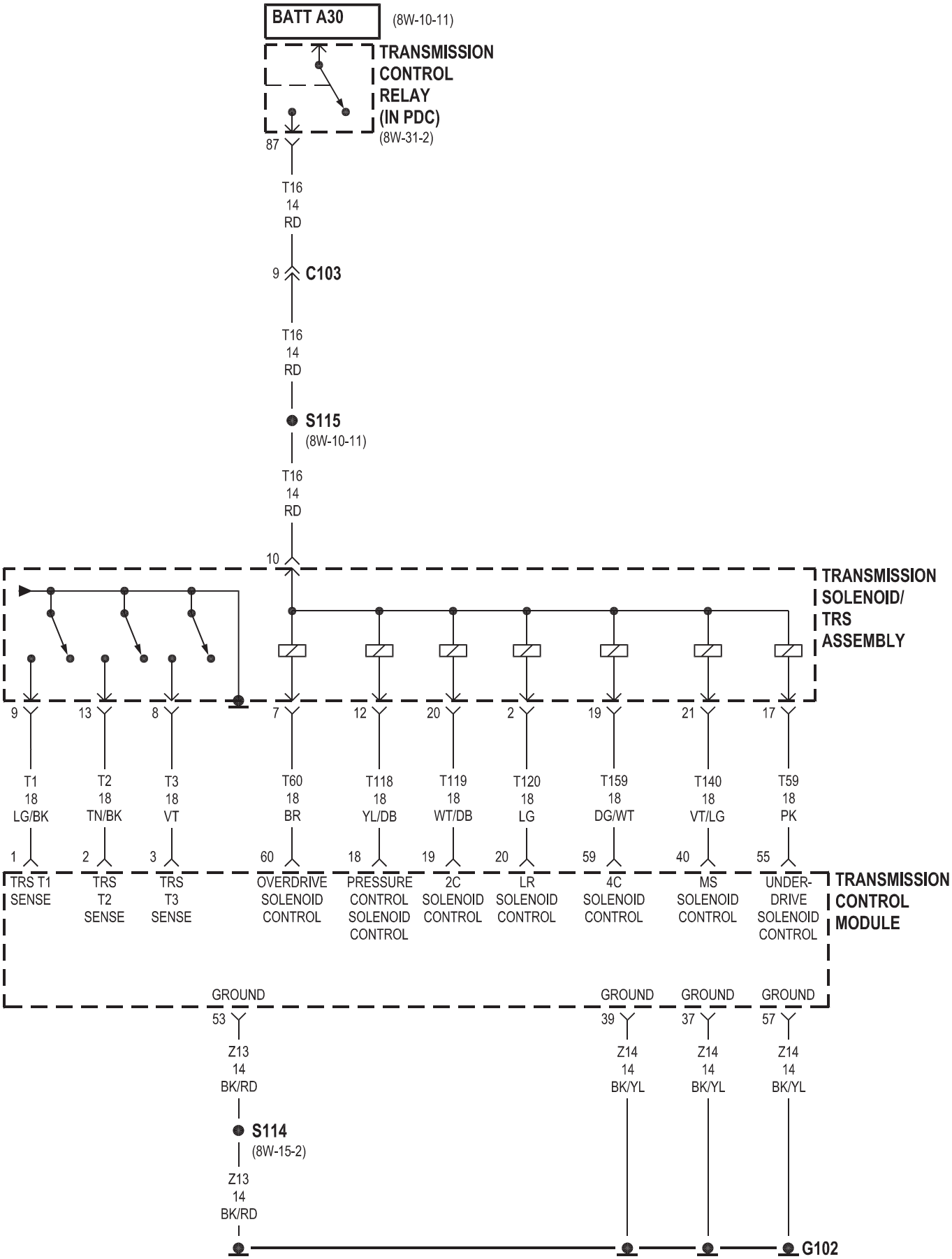
BATT A30
(8W-10-11)
TRANSMISSION CONTROL RELAY (IN PDC)
(8W-31-2)
87
T16 14 RD
9
C103
T16 14 RD
S115
(8W-10-11)
T16 14 RD
10
TRANSMISSION SOLENOID/ TRS ASSEMBLY
9 13 8 7 12 20 2 19 21 17
T1 18 LG/BK
T2 18 TN/BK
T3 18 VT
T60 18 BR
T118 18 YL/DB
T119 18 WT/DB
T120 18 LG
T159 18 DG/WT
T140 18 VT/LG
T59 18 PK
1 2 3 60 18 19 20 59 40 55
TRS T1 SENSE
TRS T2 SENSE
TRS T3 SENSE
OVERDRIVE SOLENOID CONTROL
PRESSURE CONTROL SOLENOID CONTROL
2C SOLENOID CONTROL
LR SOLENOID CONTROL
4C SOLENOID CONTROL
MS SOLENOID CONTROL
UNDER-DRIVE SOLENOID CONTROL
TRANSMISSION CONTROL MODULE
GROUND
GROUND
GROUND
GROUND
53 39 37 57
Z13 14 BK/RD
Z14 14 BK/YL
Z14 14 BK/YL
Z14 14 BK/YL
S114
(8W-15-2)
Z13 14 BK/RD
G102
(8W-15-2)

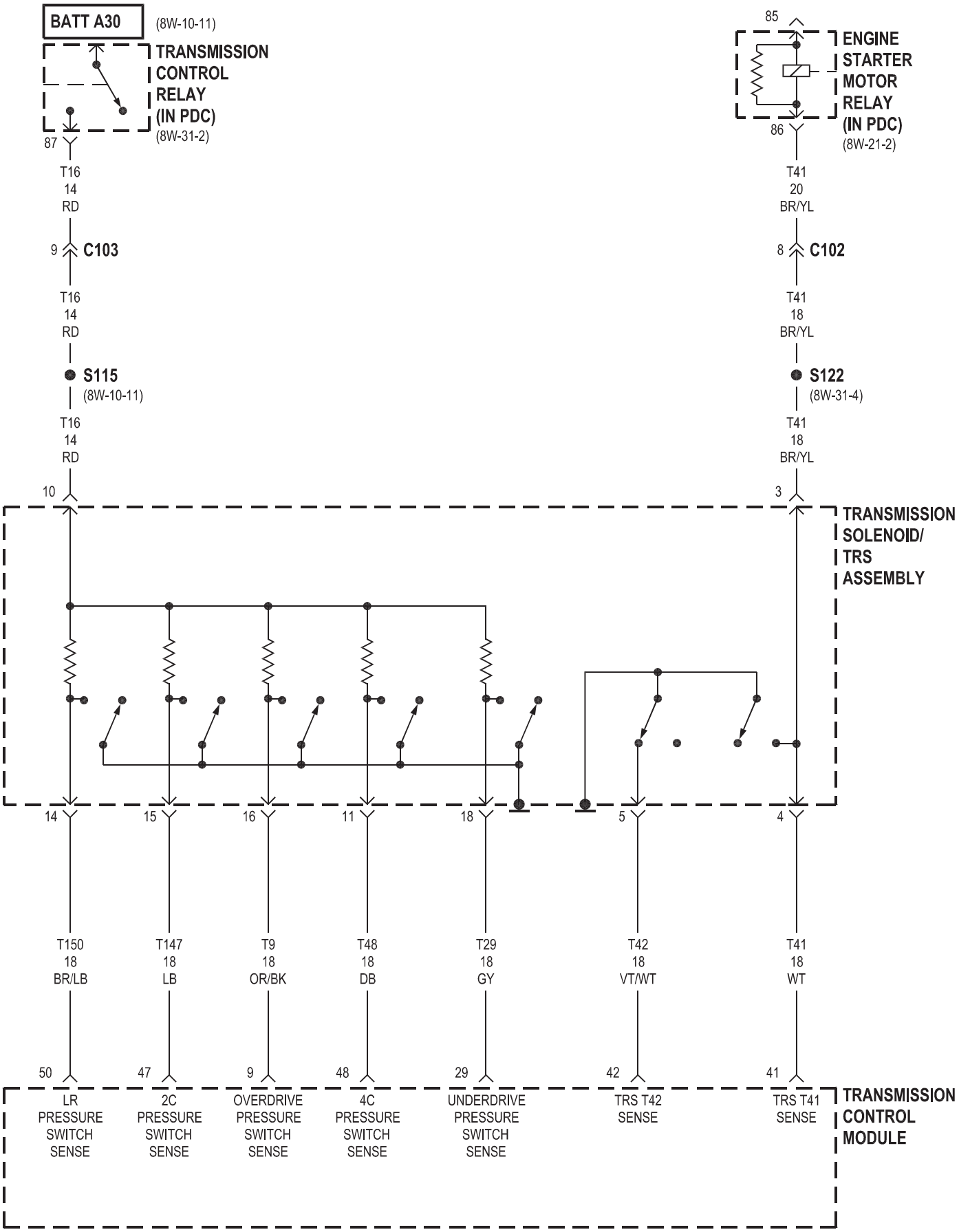
BATT A30
(8W-10-11)
TRANSMISSION CONTROL RELAY (IN PDC)
(8W-31-2)
87
T16 14 RD
9
C103
T16 14 RD
S115
(8W-10-11)
T16 14 RD
10
85
ENGINE STARTER MOTOR RELAY (IN PDC)
(8W-21-2)
86
T41 20 BR/YL
8
C102
T41 18 BR/YL
S122
(8W-31-4)
T41 18 BR/YL
3
TRANSMISSION SOLENOID/ TRS ASSEMBLY
14
15
16
11
18
5
4
T150 18 BR/LB
T147 18 LB
T9 18 OR/BK
T48 18 DB
T29 18 GY
T42 18 VT/WT
T41 18 WT
50
47
9
48
29
42
41
LR PRESSURE SWITCH SENSE
2C PRESSURE SWITCH SENSE
OVERDRIVE PRESSURE SWITCH SENSE
4C PRESSURE SWITCH SENSE
UNDERDRIVE PRESSURE SWITCH SENSE
TRS T42 SENSE
TRS T41 SENSE
TRANSMISSION CONTROL MODULE

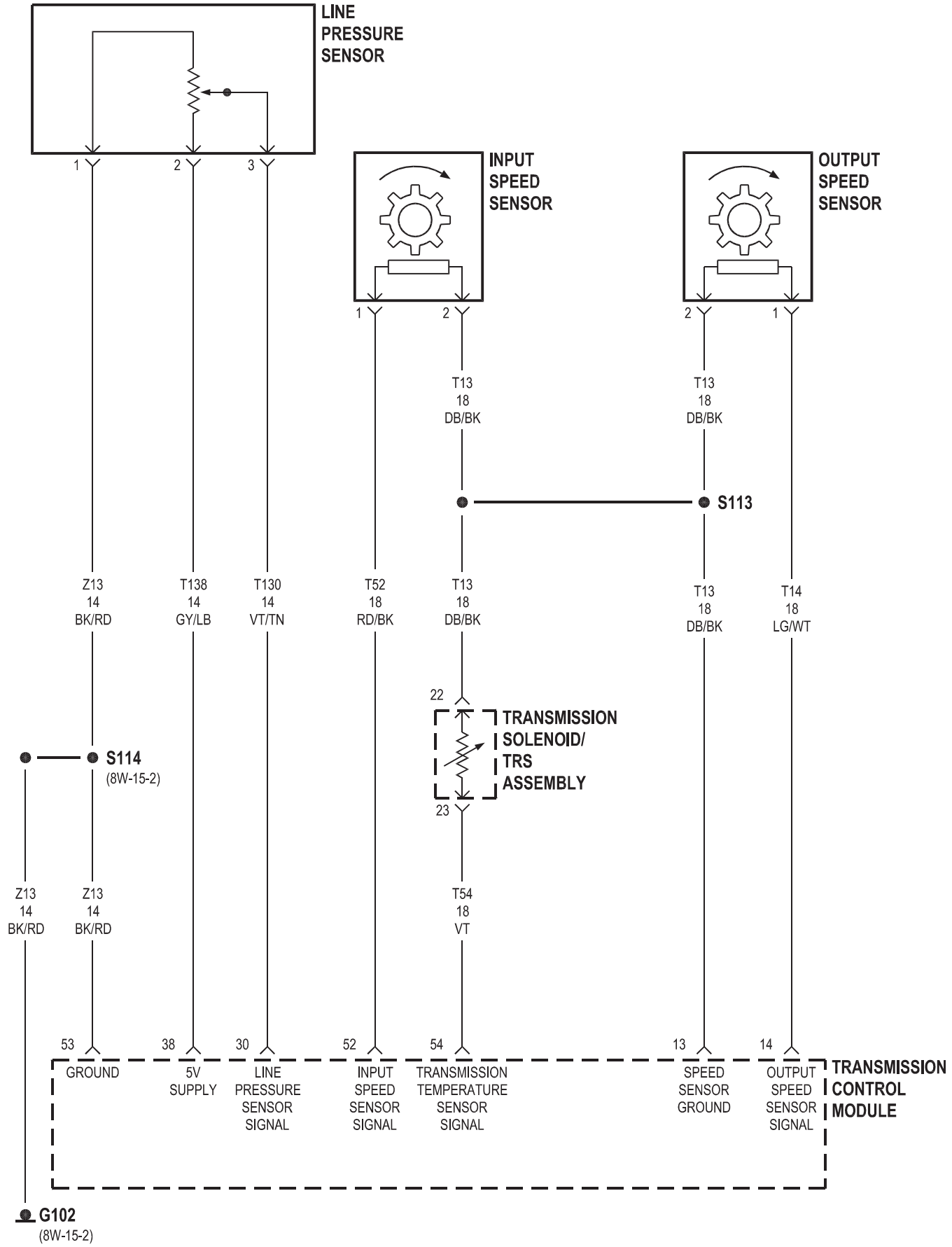
LINE PRESSURE SENSOR
1
2
3
INPUT SPEED SENSOR
1
2
OUTPUT SPEED SENSOR
2
1
T13 18 DB/BK
T13 18 DB/BK
S113
Z13 14 BK/RD
T138 14 GY/LB
T130 14 VT/TN
T52 18 RD/BK
T13 18 DB/BK
T13 18 DB/BK
T14 18 LG/WT
22
TRANSMISSION SOLENOID/ TRS ASSEMBLY
23
S114
(8W-15-2)
Z13 14 BK/RD
Z13 14 BK/RD
T54 18 VT
53
38
30
52
54
13
14
GROUND
5V SUPPLY
LINE PRESSURE SENSOR SIGNAL
INPUT SPEED SENSOR SIGNAL
TRANSMISSION TEMPERATURE SENSOR SIGNAL
SPEED SENSOR GROUND
OUTPUT SPEED SENSOR SIGNAL
TRANSMISSION CONTROL MODULE
G102
(8W-15-2)

8W-33 VEHICLE SPEED CONTROL

Component	Page
Brake Lamp Switch	8W-33-2
Clockspring	8W-33-4
Electronic Speed Control Servo	8W-33-2
Fuse 23 (JB)	8W-33-2
G108	8W-33-2
G300	8W-33-2
Junction Block	8W-33-2
Powertrain Control Module	8W-33-2, 3
Speed Control Switch No. 1	8W-33-4
Speed Control Switch No. 2	8W-33-4

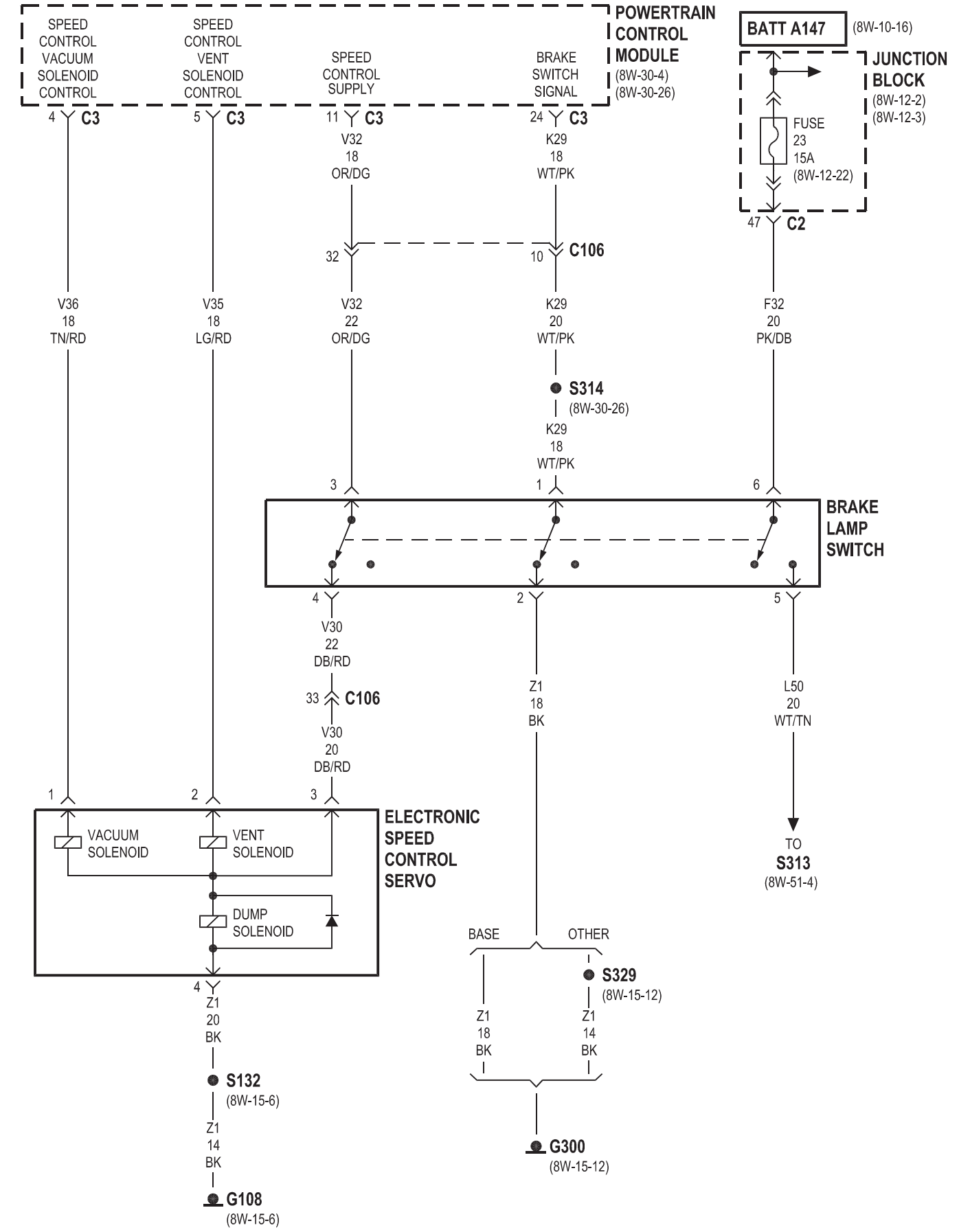
POWERTRAIN CONTROL MODULE
(8W-30-4)
(8W-30-26)
SPEED CONTROL VACUUM SOLENOID CONTROL
SPEED CONTROL VENT SOLENOID CONTROL
SPEED CONTROL SUPPLY
BRAKE SWITCH SIGNAL
4 C3
5 C3
11 C3
24 C3
V32 18 OR/DG
K29 18 WT/PK
BATT A147
(8W-10-16)
JUNCTION BLOCK
(8W-12-2)
(8W-12-3)
FUSE 23 15A
(8W-12-22)
47 C2
32
10 C106
V36 18 TN/RD
V35 18 LG/RD
V32 22 OR/DG
K29 20 WT/PK
F32 20 PK/DB
S314
(8W-30-26)
K29 18 WT/PK
3
1
6
BRAKE LAMP SWITCH
4
2
5
V30 22 DB/RD
33 C106
V30 20 DB/RD
Z1 18 BK
L50 20 WT/TN
TO S313
(8W-51-4)
1
2
3
ELECTRONIC SPEED CONTROL SERVO
VACUUM SOLENOID
VENT SOLENOID
DUMP SOLENOID
4
Z1 20 BK
S132
(8W-15-6)
Z1 14 BK
G108
(8W-15-6)
BASE
OTHER
S329
(8W-15-12)
Z1 18 BK
Z1 14 BK
G300
(8W-15-12)

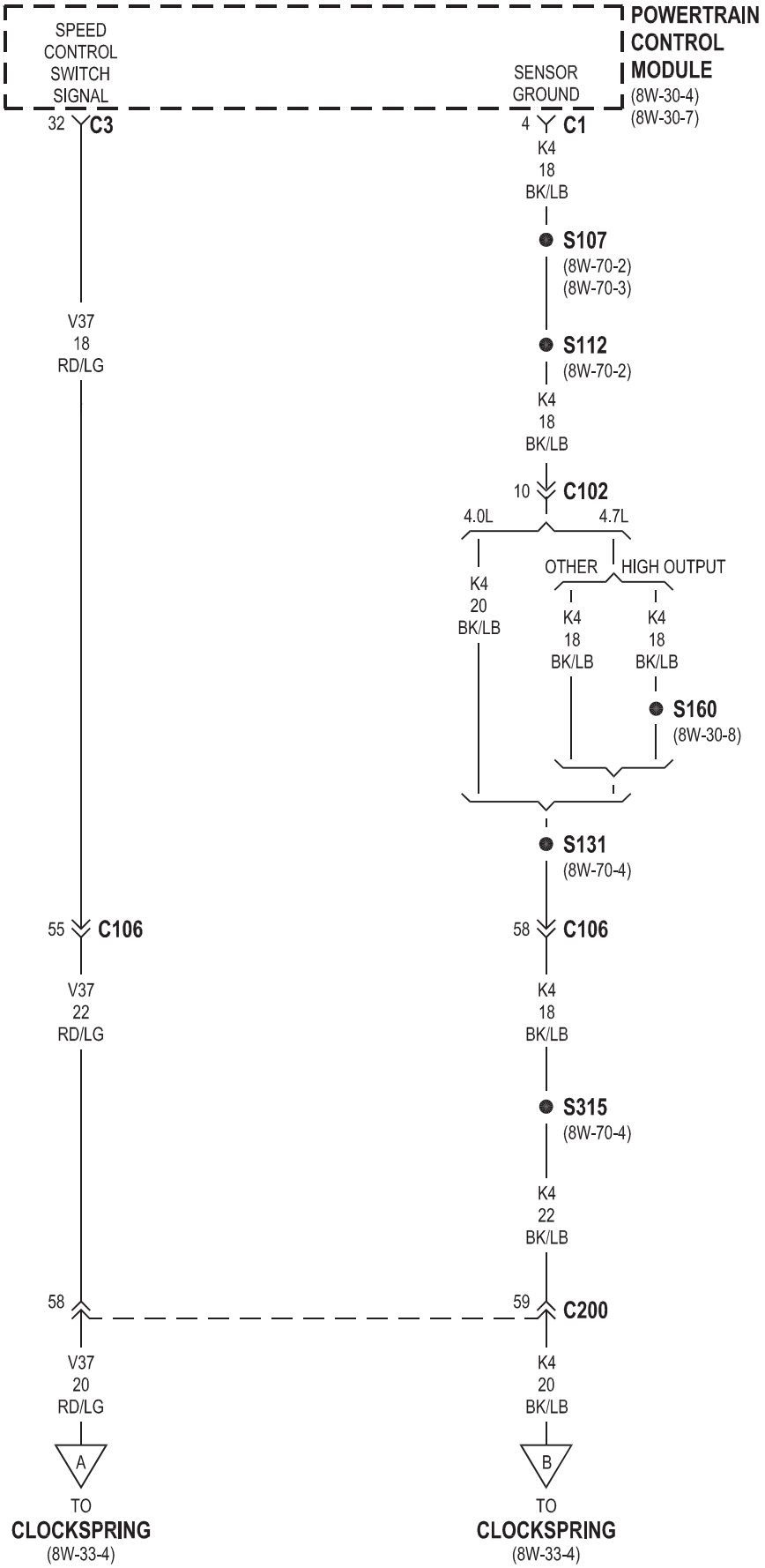
POWERTRAIN CONTROL MODULE
(8W-30-4)
(8W-30-7)
SPEED CONTROL SWITCH SIGNAL
SENSOR GROUND
32 C3
4 C1
K4 18 BK/LB
S107
(8W-70-2)
(8W-70-3)
V37 18 RD/LG
S112
(8W-70-2)
K4 18 BK/LB
10 C102
4.0L
4.7L
OTHER
HIGH OUTPUT
K4 20 BK/LB
K4 18 BK/LB
K4 18 BK/LB
S160
(8W-30-8)
S131
(8W-70-4)
55 C106
58 C106
V37 22 RD/LG
K4 18 BK/LB
S315
(8W-70-4)
K4 22 BK/LB
58
59 C200
V37 20 RD/LG
K4 20 BK/LB
A
B
TO CLOCKSPRING
(8W-33-4)
TO CLOCKSPRING
(8W-33-4)

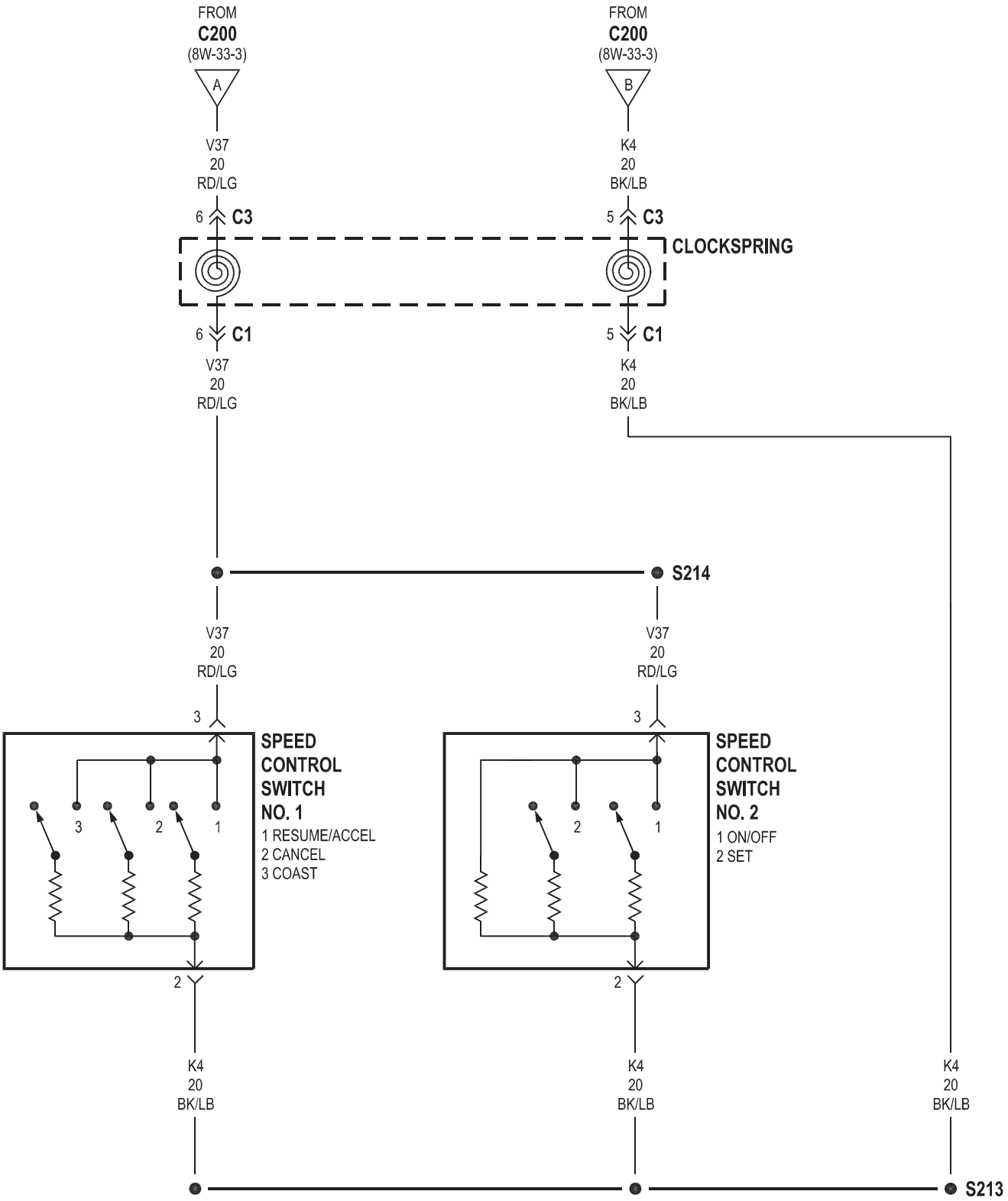
FROM
C200
(8W-33-3)
A
V37
20
RD/LG
6
C3
6
C1
V37
20
RD/LG
FROM
C200
(8W-33-3)
B
K4
20
BK/LB
5
C3
CLOCKSPRING
5
C1
K4
20
BK/LB
S214
V37
20
RD/LG
3
SPEED
CONTROL
SWITCH
NO. 1
1 RESUME/ACCEL
2 CANCEL
3 COAST
3
2
1
2
K4
20
BK/LB
V37
20
RD/LG
3
SPEED
CONTROL
SWITCH
NO. 2
1 ON/OFF
2 SET
2
1
2
K4
20
BK/LB
K4
20
BK/LB
S213

8W-35 ANTILOCK BRAKES

Component	Page
Brake Lamp Switch	8W-35-4
Controller Antilock Brake	8W-35-2, 3, 4, 5
Diagnostic Junction Port	8W-35-2
Fuse 4 (PDC)	8W-35-2
Fuse 25 (PDC)	8W-35-2
Fuse 19 (JB)	8W-35-2
Fuse 23 (JB)	8W-35-4
G-Switch	8W-35-4
G107	8W-35-2
Instrument Cluster	8W-35-3
Junction Block	8W-35-2, 3, 4
Left Front Wheel Speed Sensor	8W-35-5
Left Rear Wheel Speed Sensor	8W-35-5
Power Distribution Center	8W-35-2
Powertrain Control Module	8W-35-3
Red Brake Warning Indicator Switch	8W-35-4
Right Front Wheel Speed Sensor	8W-35-5
Right Rear Wheel Speed Sensor	8W-35-5
Transmission Control Module	8W-35-3

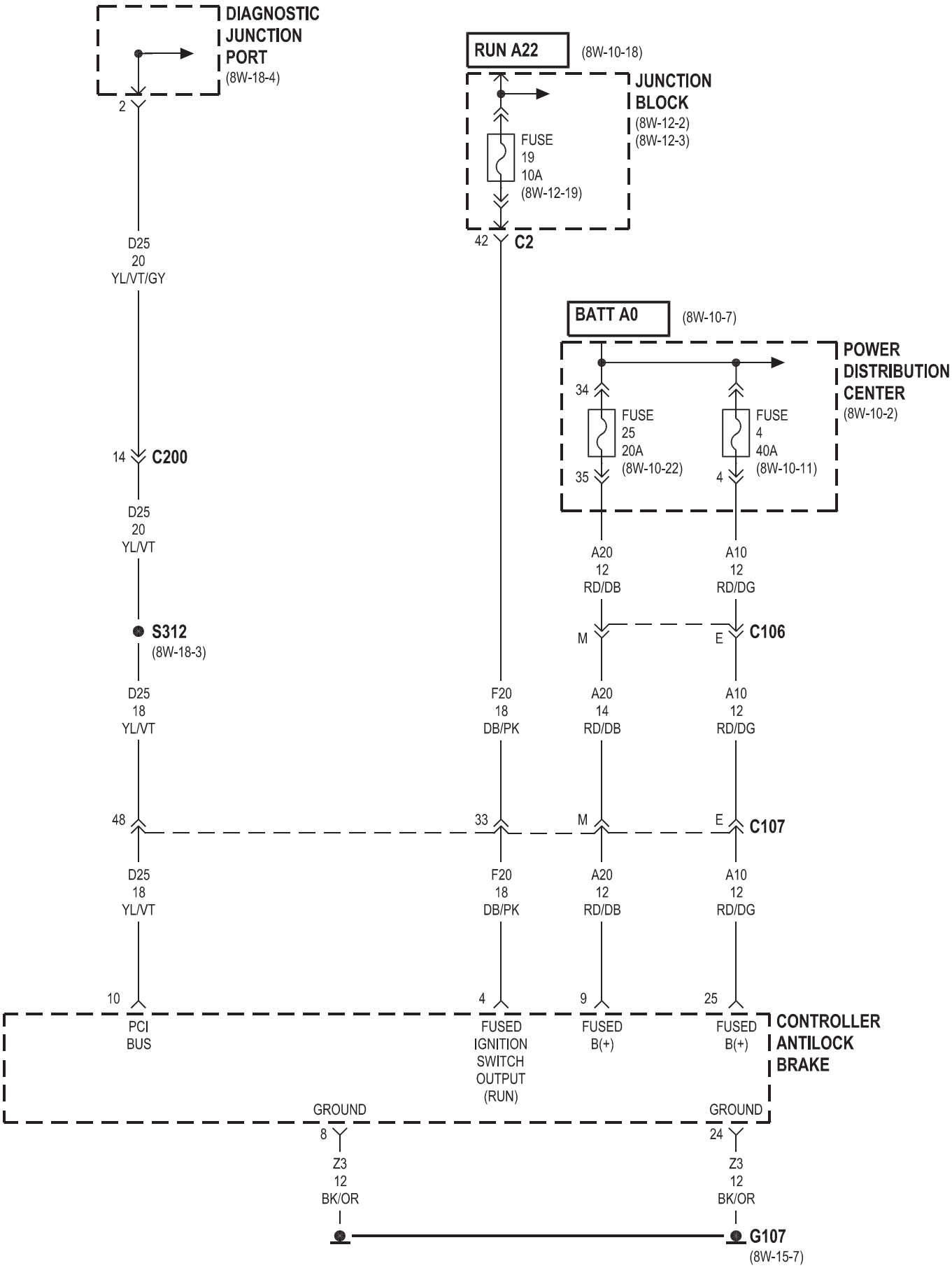
DIAGNOSTIC JUNCTION PORT
(8W-18-4)
2
D25
20
YL/VT/GY
14
C200
D25
20
YL/VT
S312
(8W-18-3)
D25
18
YL/VT
48
D25
18
YL/VT
10
PCI
BUS
RUN A22
(8W-10-18)
JUNCTION BLOCK
(8W-12-2)
(8W-12-3)
FUSE
19
10A
(8W-12-19)
42
C2
F20
18
DB/PK
33
F20
18
DB/PK
4
FUSED
IGNITION
SWITCH
OUTPUT
(RUN)
BATT A0
(8W-10-7)
POWER DISTRIBUTION CENTER
(8W-10-2)
34
FUSE
25
20A
(8W-10-22)
35
FUSE
4
40A
(8W-10-11)
4
A20
12
RD/DB
A10
12
RD/DG
M
E
C106
A20
14
RD/DB
A10
12
RD/DG
M
E
C107
A20
12
RD/DB
A10
12
RD/DG
9
FUSED
B(+)
25
FUSED
B(+)
CONTROLLER ANTILOCK BRAKE
GROUND
8
Z3
12
BK/OR
GROUND
24
Z3
12
BK/OR
G107
(8W-15-7)

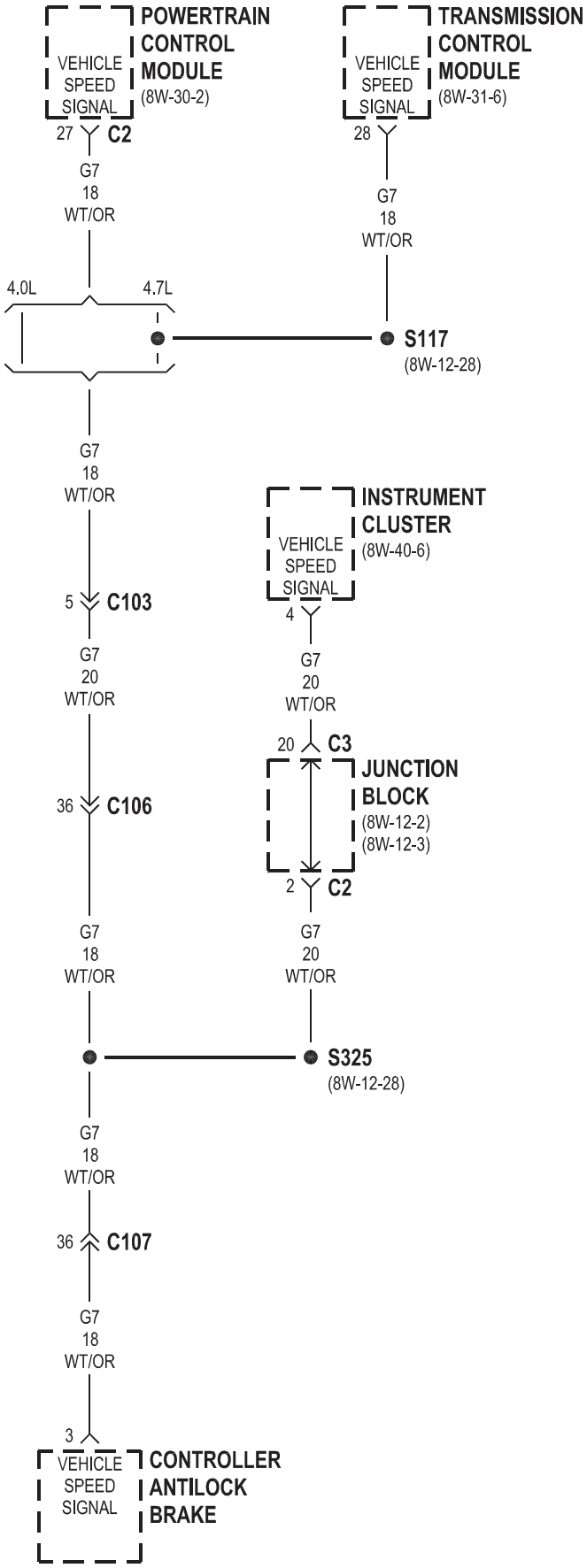
POWERTRAIN CONTROL MODULE
(8W-30-2)
VEHICLE SPEED SIGNAL
27
C2
G7
18
WT/OR
TRANSMISSION CONTROL MODULE
(8W-31-6)
VEHICLE SPEED SIGNAL
28
G7
18
WT/OR
4.0L
4.7L
S117
(8W-12-28)
G7
18
WT/OR
INSTRUMENT CLUSTER
(8W-40-6)
VEHICLE SPEED SIGNAL
4
5
C103
G7
20
WT/OR
G7
20
WT/OR
20
C3
JUNCTION BLOCK
(8W-12-2)
(8W-12-3)
36
C106
2
C2
G7
18
WT/OR
G7
20
WT/OR
S325
(8W-12-28)
G7
18
WT/OR
36
C107
G7
18
WT/OR
3
VEHICLE SPEED SIGNAL
CONTROLLER ANTILOCK BRAKE

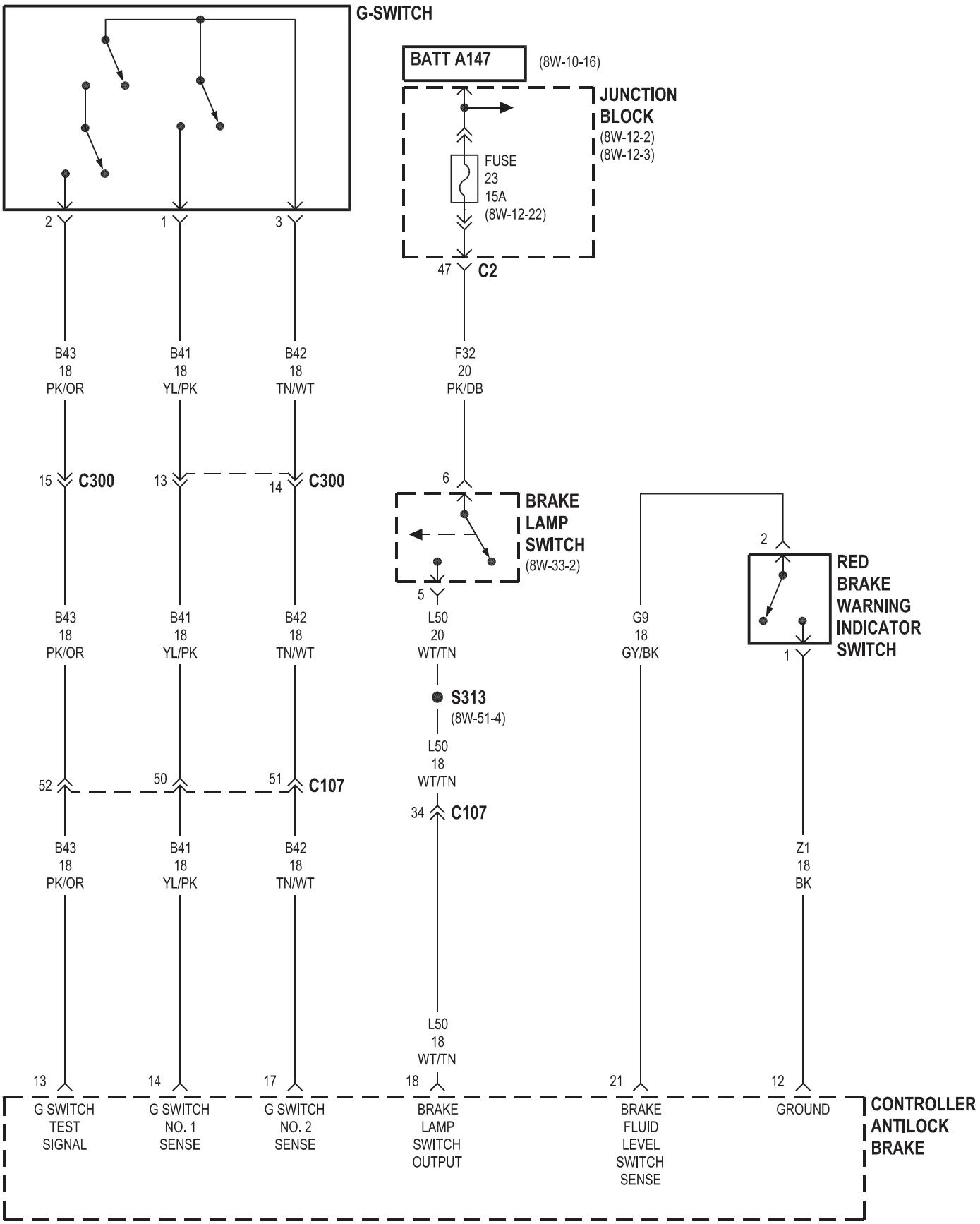
G-SWITCH
BATT A147
(8W-10-16)
JUNCTION BLOCK
(8W-12-2)
(8W-12-3)
FUSE
23
15A
(8W-12-22)
47
C2
2
1
3
B43
18
PK/OR
B41
18
YL/PK
B42
18
TN/WT
F32
20
PK/DB
15
C300
13
14
C300
6
BRAKE LAMP SWITCH
(8W-33-2)
5
L50
20
WT/TN
2
RED BRAKE WARNING INDICATOR SWITCH
1
G9
18
GY/BK
S313
(8W-51-4)
L50
18
WT/TN
52
50
51
C107
34
C107
Z1
18
BK
13
14
17
18
21
12
G SWITCH TEST SIGNAL
G SWITCH NO. 1 SENSE
G SWITCH NO. 2 SENSE
BRAKE LAMP SWITCH OUTPUT
BRAKE FLUID LEVEL SWITCH SENSE
GROUND
CONTROLLER ANTILOCK BRAKE

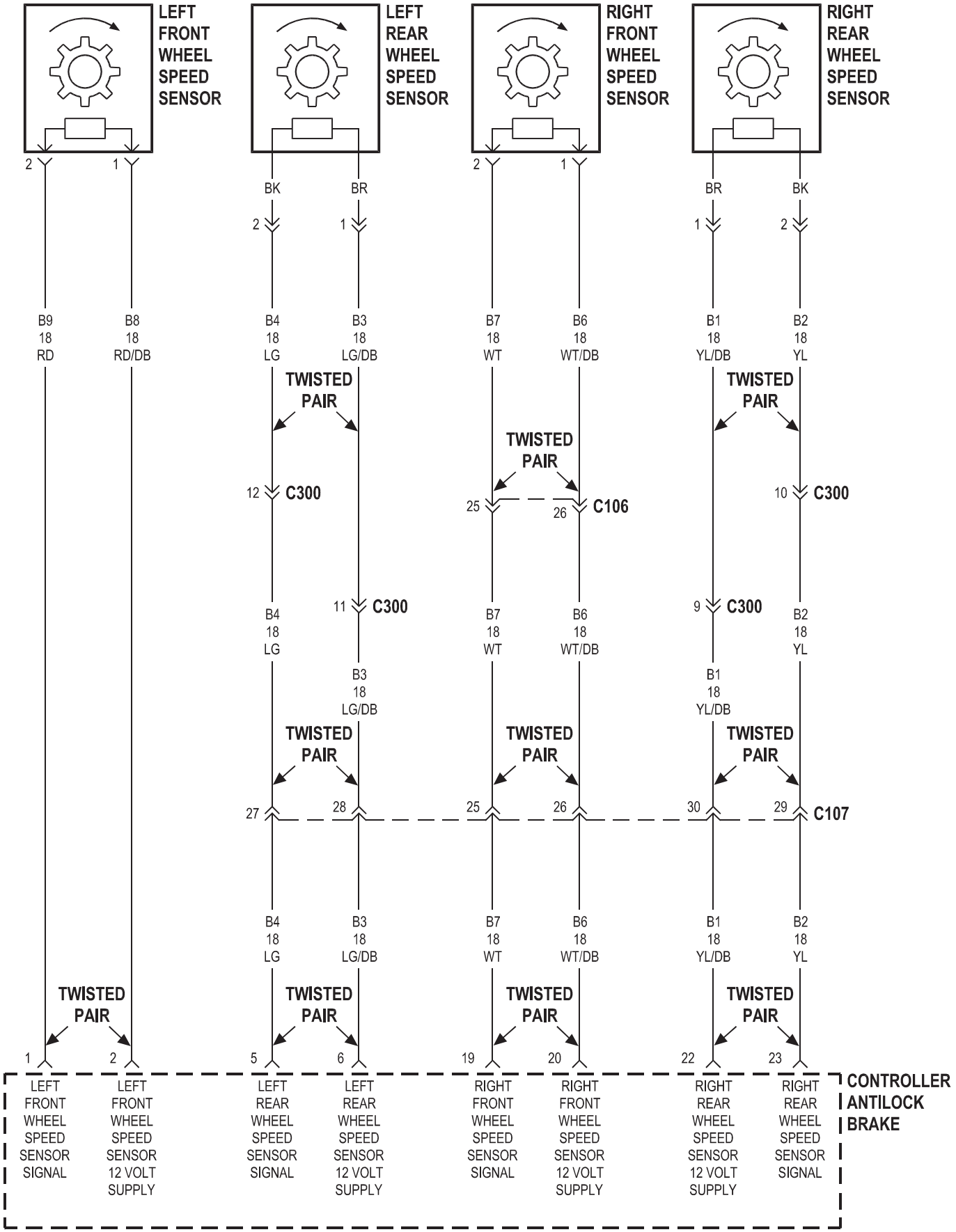
LEFT FRONT WHEEL SPEED SENSOR
LEFT REAR WHEEL SPEED SENSOR
RIGHT FRONT WHEEL SPEED SENSOR
RIGHT REAR WHEEL SPEED SENSOR
2
1
BK
BR
B9 18 RD
B8 18 RD/DB
B4 18 LG
B3 18 LG/DB
B7 18 WT
B6 18 WT/DB
B1 18 YL/DB
B2 18 YL
TWISTED PAIR
12
C300
25
26
C106
10
11
9
27
28
30
29
C107
1
2
5
6
19
20
22
23
LEFT FRONT WHEEL SPEED SENSOR SIGNAL
LEFT FRONT WHEEL SPEED SENSOR 12 VOLT SUPPLY
LEFT REAR WHEEL SPEED SENSOR SIGNAL
LEFT REAR WHEEL SPEED SENSOR 12 VOLT SUPPLY
RIGHT FRONT WHEEL SPEED SENSOR SIGNAL
RIGHT FRONT WHEEL SPEED SENSOR 12 VOLT SUPPLY
RIGHT REAR WHEEL SPEED SENSOR 12 VOLT SUPPLY
RIGHT REAR WHEEL SPEED SENSOR SIGNAL
CONTROLLER ANTILOCK BRAKE

8W-39 VEHICLE THEFT SECURITY SYSTEM

Component	Page
Automatic Headlamp Light Sensor/VTSS LED	8W-39-3
Body Control Module	8W-39-2, 3, 4, 5, 7, 8
Clockspring	8W-39-7
Diagnostic Junction Port	8W-39-8
Driver Cylinder Lock Switch	8W-39-6
Driver Door Lock Motor/Ajar Switch	8W-39-6
Driver Door Module	8W-39-6
Engine Starter Motor Relay	8W-39-2
Fuse 8 (PDC)	8W-39-2
Fuse 18 (PDC)	8W-39-7
Fuse 7 (JB)	8W-39-3, 8
Fuse 22 (JB)	8W-39-2, 8
Fuse 28 (JB)	8W-39-2
G108	8W-39-7
G200	8W-39-8
G300	8W-39-5, 6
G301	8W-39-4, 5
Horn No. 1	8W-39-7
Horn No. 2	8W-39-7
Horn Relay	8W-39-7
Horn Switch	8W-39-7
Ignition Switch	8W-39-2
Junction Block	8W-39-2, 3, 4, 5, 7, 8
Left Liftgate Ajar Switch	8W-39-4
Left Rear Door Power Lock Motor/Ajar Switch	8W-39-5
Liftgate Flip-Up Ajar Switch	8W-39-4
Passenger Door Lock Motor/Ajar Switch	8W-39-6
Passenger Door Module	8W-39-6
Power Distribution Center	8W-39-2, 7
Right Liftgate Ajar Switch	8W-39-4
Right Rear Door Power Lock Motor/Ajar Switch	8W-39-5
Sentry Key Immobilizer Module	8W-39-8

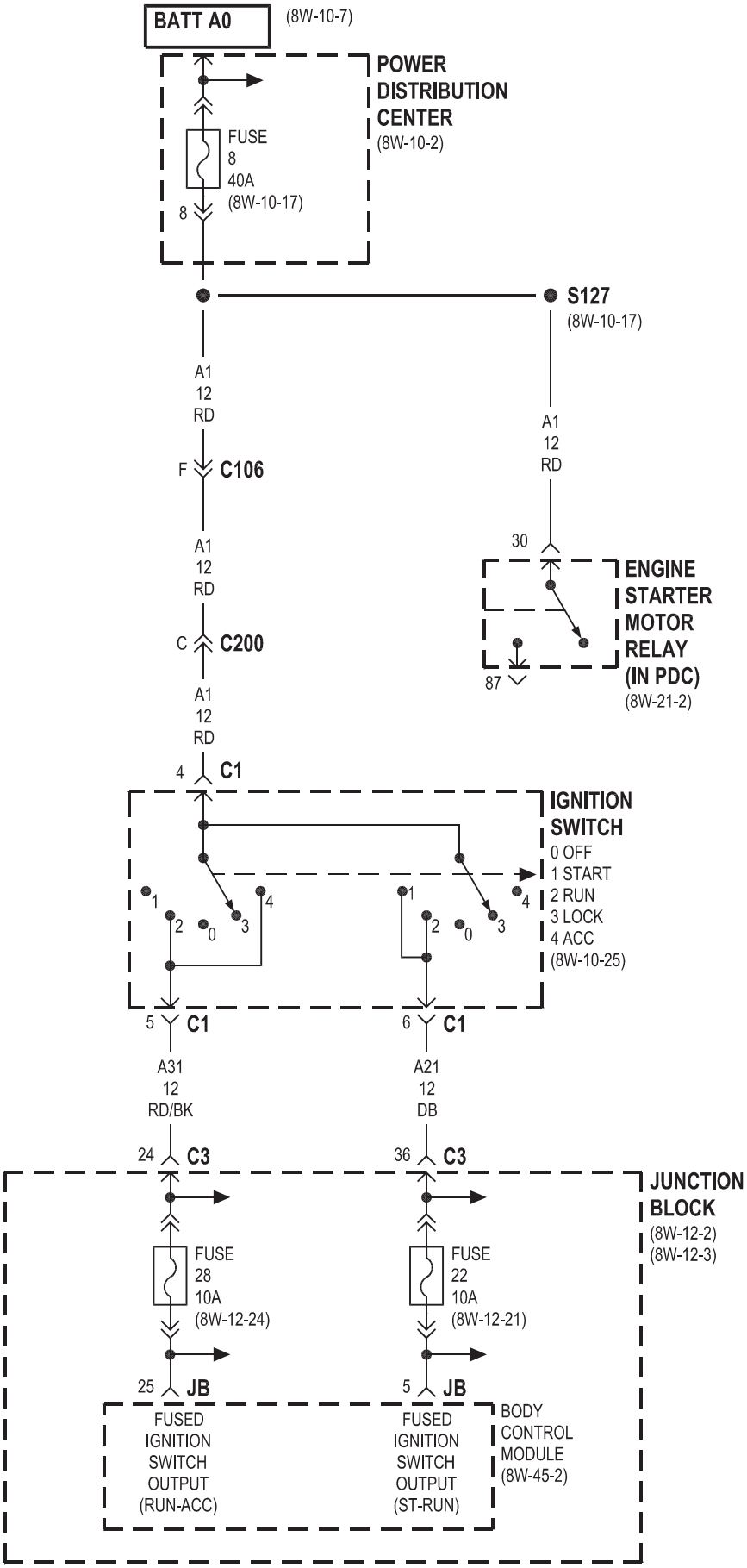
BATT A0
(8W-10-7)
POWER DISTRIBUTION CENTER
(8W-10-2)
FUSE 8 40A
(8W-10-17)
8
S127
(8W-10-17)
A1 12 RD
F
C106
A1 12 RD
C
C200
A1 12 RD
4
C1
A1 12 RD
30
87
ENGINE STARTER MOTOR RELAY (IN PDC)
(8W-21-2)
IGNITION SWITCH
0 OFF
1 START
2 RUN
3 LOCK
4 ACC
(8W-10-25)
5
C1
6
C1
A31 12 RD/BK
A21 12 DB
24
C3
36
C3
JUNCTION BLOCK
(8W-12-2)
(8W-12-3)
FUSE 28 10A
(8W-12-24)
FUSE 22 10A
(8W-12-21)
25
JB
5
JB
FUSED IGNITION SWITCH OUTPUT (RUN-ACC)
FUSED IGNITION SWITCH OUTPUT (ST-RUN)
BODY CONTROL MODULE
(8W-45-2)

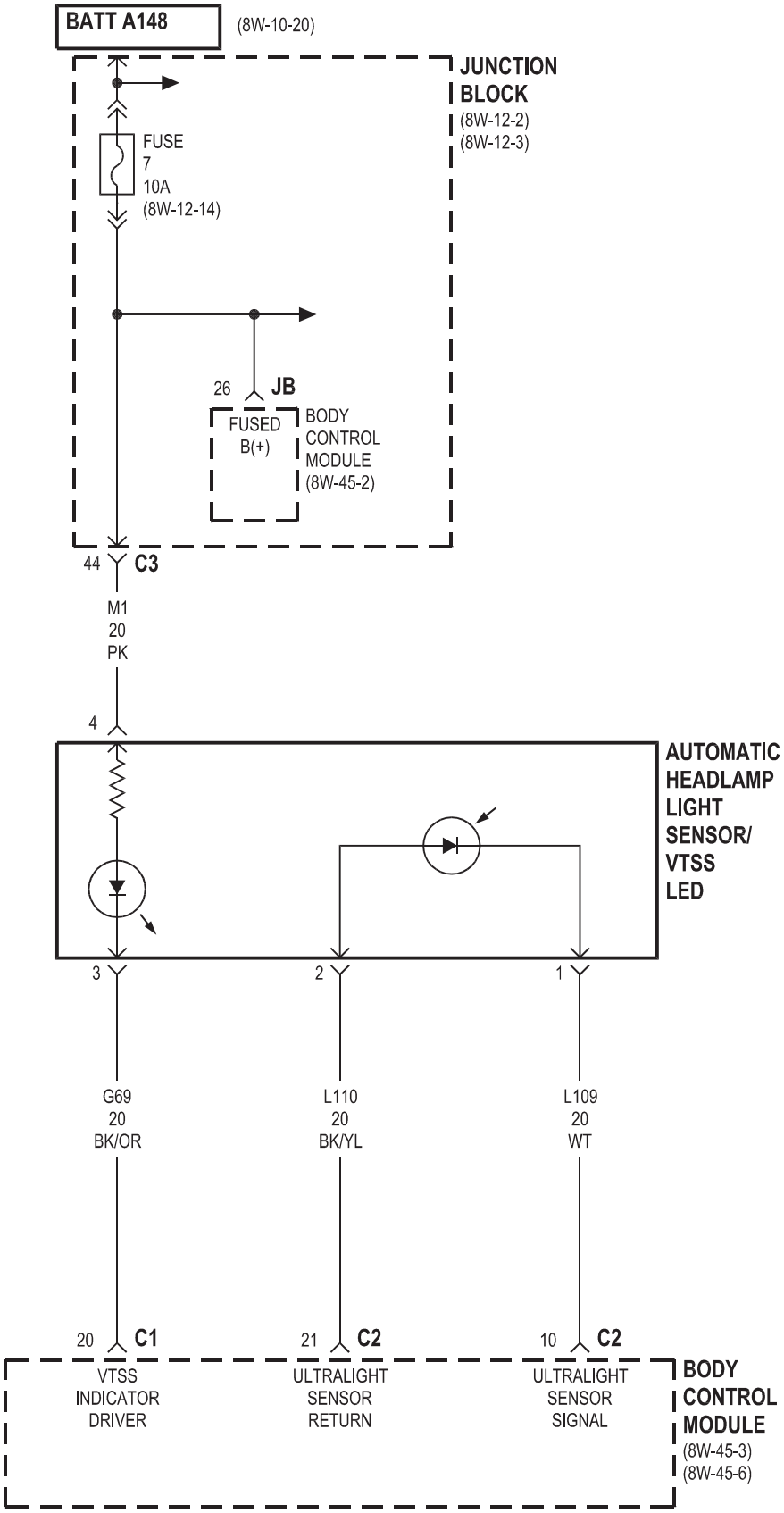
BATT A148
(8W-10-20)
JUNCTION BLOCK
(8W-12-2)
(8W-12-3)
FUSE
7
10A
(8W-12-14)
26
JB
FUSED
B(+)
BODY
CONTROL
MODULE
(8W-45-2)
44
C3
M1
20
PK
4
AUTOMATIC
HEADLAMP
LIGHT
SENSOR/
VTSS
LED
3
2
1
G69
20
BK/OR
L110
20
BK/YL
L109
20
WT
20
C1
21
C2
10
C2
VTSS
INDICATOR
DRIVER
ULTRALIGHT
SENSOR
RETURN
ULTRALIGHT
SENSOR
SIGNAL
BODY
CONTROL
MODULE
(8W-45-3)
(8W-45-6)

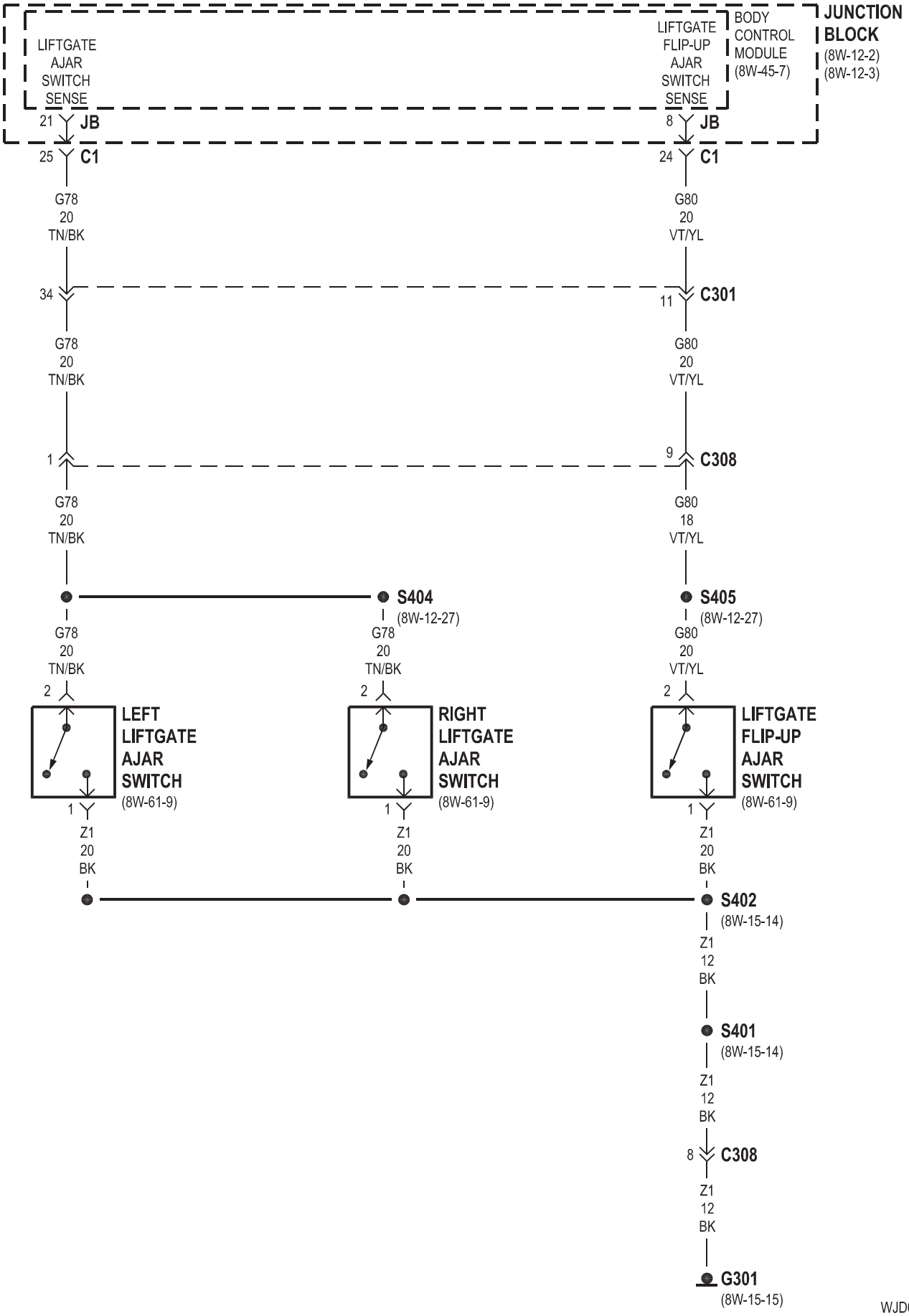
JUNCTION BLOCK
(8W-12-2)
(8W-12-3)
BODY CONTROL MODULE
(8W-45-7)
LIFTGATE AJAR SWITCH SENSE
LIFTGATE FLIP-UP AJAR SWITCH SENSE
21 JB
8 JB
25 C1
24 C1
G78 20 TN/BK
G80 20 VT/YL
34
11 C301
G78 20 TN/BK
G80 20 VT/YL
1
9 C308
G78 20 TN/BK
G80 18 VT/YL
S404
(8W-12-27)
S405
(8W-12-27)
G78 20 TN/BK
G78 20 TN/BK
G80 20 VT/YL
2
2
2
LEFT LIFTGATE AJAR SWITCH
(8W-61-9)
RIGHT LIFTGATE AJAR SWITCH
(8W-61-9)
LIFTGATE FLIP-UP AJAR SWITCH
(8W-61-9)
1
1
1
Z1 20 BK
Z1 20 BK
Z1 20 BK
S402
(8W-15-14)
Z1 12 BK
S401
(8W-15-14)
Z1 12 BK
8 C308
Z1 12 BK
G301
(8W-15-15)

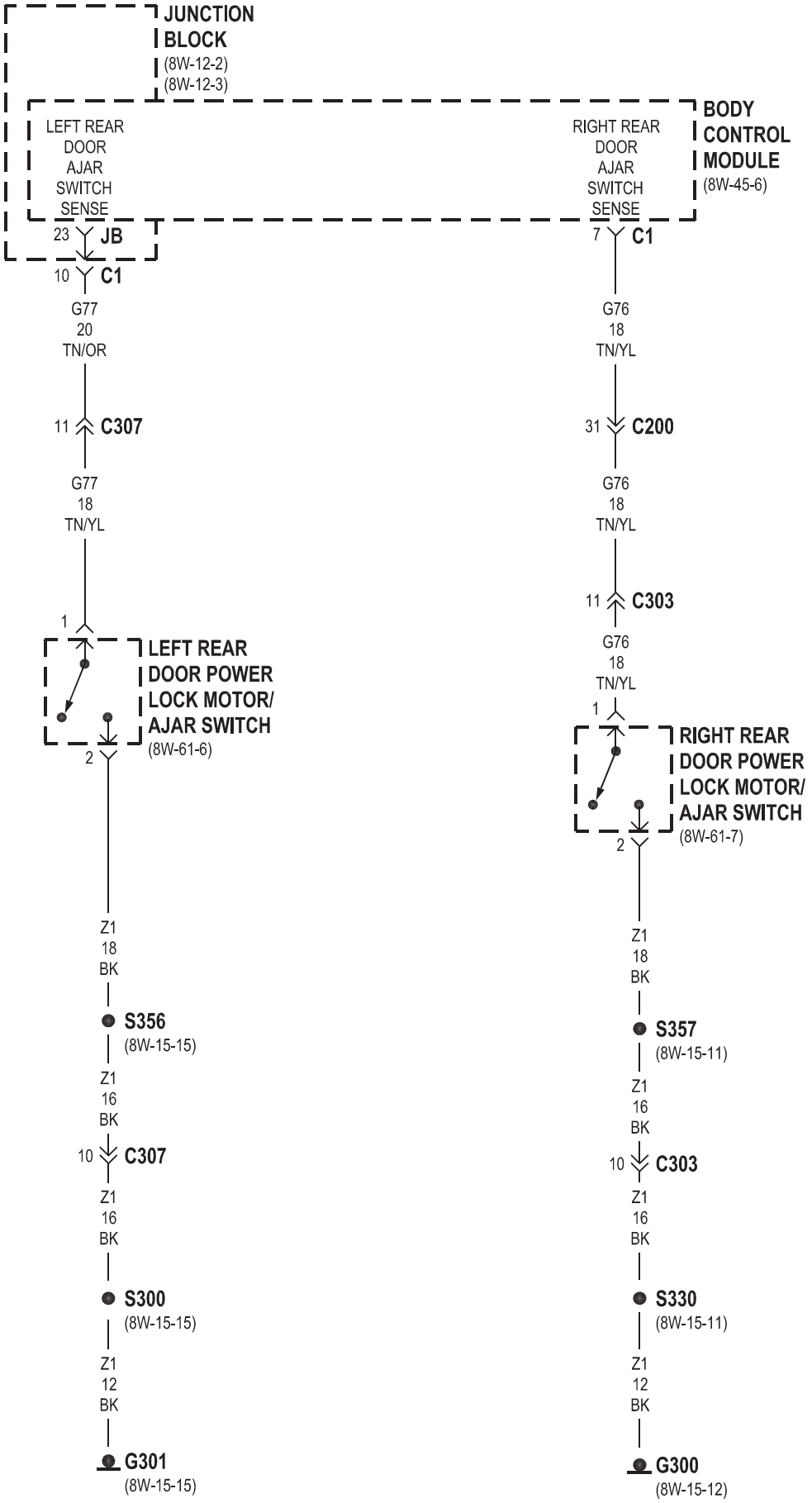
JUNCTION BLOCK
(8W-12-2)
(8W-12-3)
BODY CONTROL MODULE
(8W-45-6)
LEFT REAR DOOR AJAR SWITCH SENSE
RIGHT REAR DOOR AJAR SWITCH SENSE
23 JB
10 C1
7 C1
G77 20 TN/OR
G76 18 TN/YL
11 C307
31 C200
G77 18 TN/YL
G76 18 TN/YL
11 C303
1
G76 18 TN/YL
1
LEFT REAR DOOR POWER LOCK MOTOR/ AJAR SWITCH
(8W-61-6)
2
RIGHT REAR DOOR POWER LOCK MOTOR/ AJAR SWITCH
(8W-61-7)
2
Z1 18 BK
Z1 18 BK
S356
(8W-15-15)
S357
(8W-15-11)
Z1 16 BK
Z1 16 BK
10 C307
10 C303
Z1 16 BK
Z1 16 BK
S300
(8W-15-15)
S330
(8W-15-11)
Z1 12 BK
Z1 12 BK
G301
(8W-15-15)
G300
(8W-15-12)

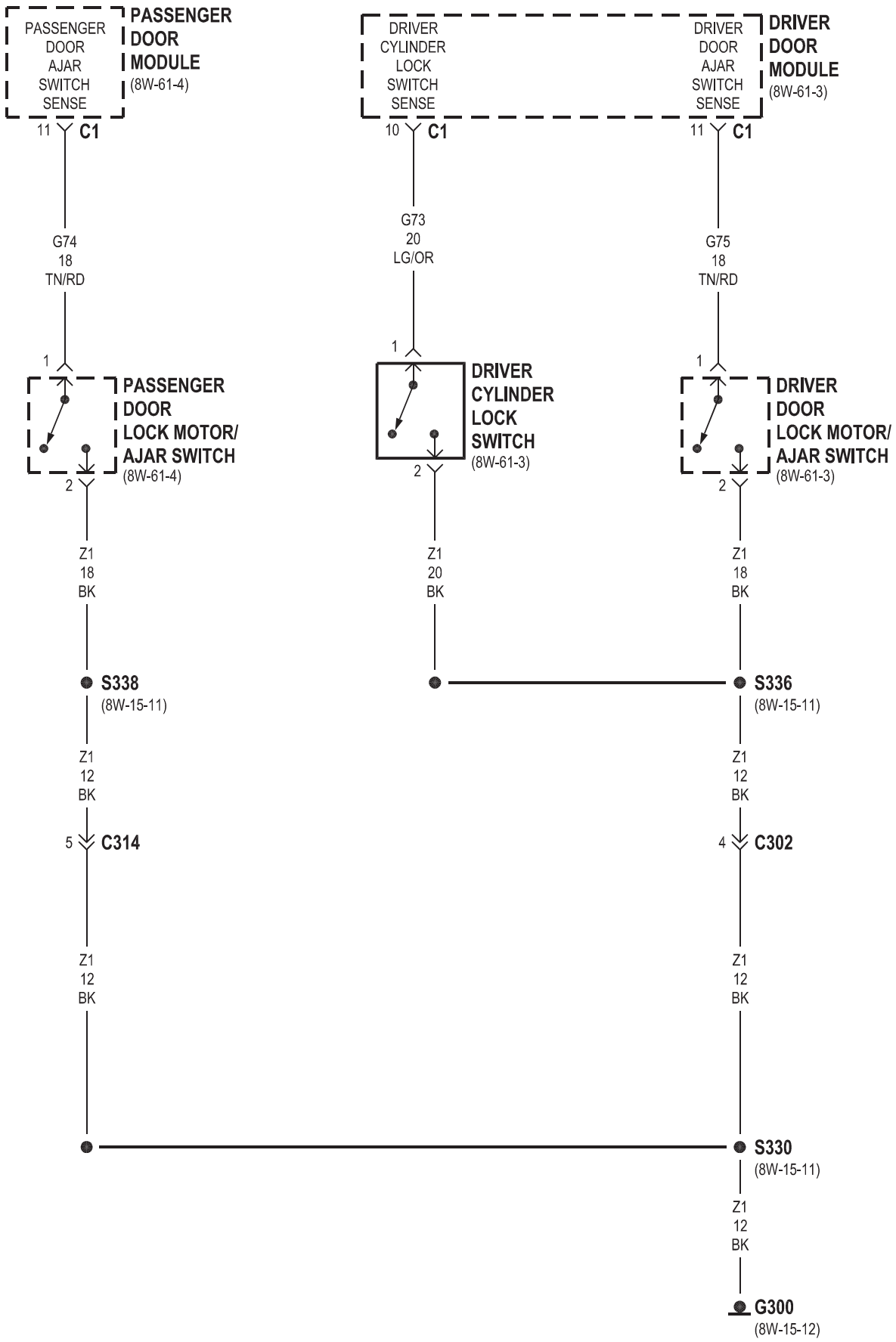
PASSENGER DOOR AJAR SWITCH SENSE
PASSENGER DOOR MODULE
(8W-61-4)
DRIVER CYLINDER LOCK SWITCH SENSE
DRIVER DOOR AJAR SWITCH SENSE
DRIVER DOOR MODULE
(8W-61-3)
11 C1
10 C1
11 C1
G74
18
TN/RD
G73
20
LG/OR
G75
18
TN/RD
1
PASSENGER DOOR LOCK MOTOR/ AJAR SWITCH
(8W-61-4)
DRIVER CYLINDER LOCK SWITCH
(8W-61-3)
DRIVER DOOR LOCK MOTOR/ AJAR SWITCH
(8W-61-3)
2
Z1
18
BK
Z1
20
BK
Z1
18
BK
S338
(8W-15-11)
S336
(8W-15-11)
Z1
12
BK
5 C314
4 C302
S330
(8W-15-11)
G300
(8W-15-12)

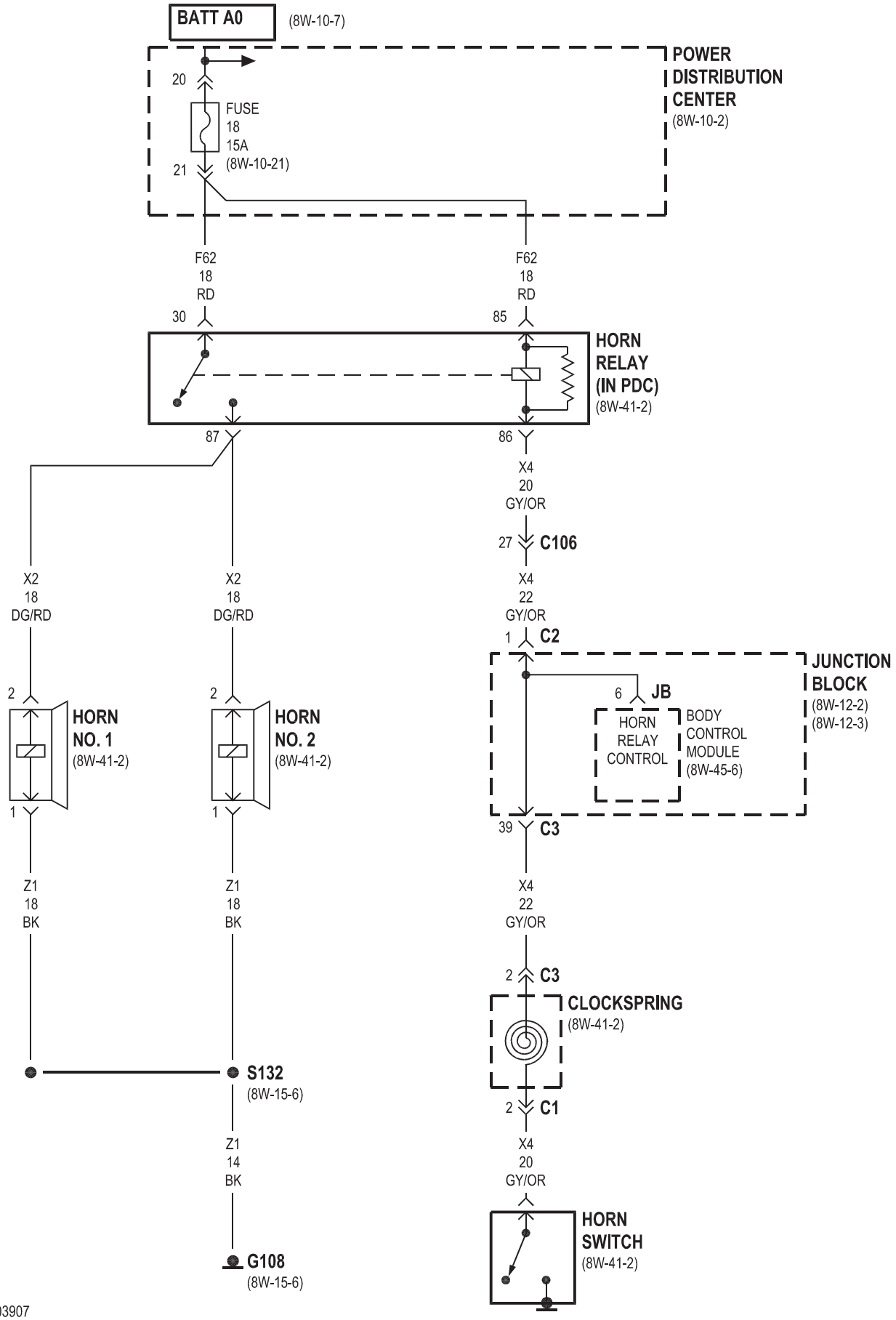
BATT A0
(8W-10-7)
POWER DISTRIBUTION CENTER
(8W-10-2)
20
FUSE 18 15A
(8W-10-21)
21
F62 18 RD
F62 18 RD
30
85
HORN RELAY (IN PDC)
(8W-41-2)
87
86
X4 20 GY/OR
27
C106
X4 22 GY/OR
1
C2
JUNCTION BLOCK
(8W-12-2)
(8W-12-3)
6
JB
HORN RELAY CONTROL
BODY CONTROL MODULE
(8W-45-6)
39
C3
X2 18 DG/RD
X2 18 DG/RD
2
HORN NO. 1
(8W-41-2)
HORN NO. 2
(8W-41-2)
1
Z1 18 BK
Z1 18 BK
X4 22 GY/OR
2
C3
CLOCKSPRING
(8W-41-2)
S132
(8W-15-6)
2
C1
Z1 14 BK
X4 20 GY/OR
HORN SWITCH
(8W-41-2)
G108
(8W-15-6)

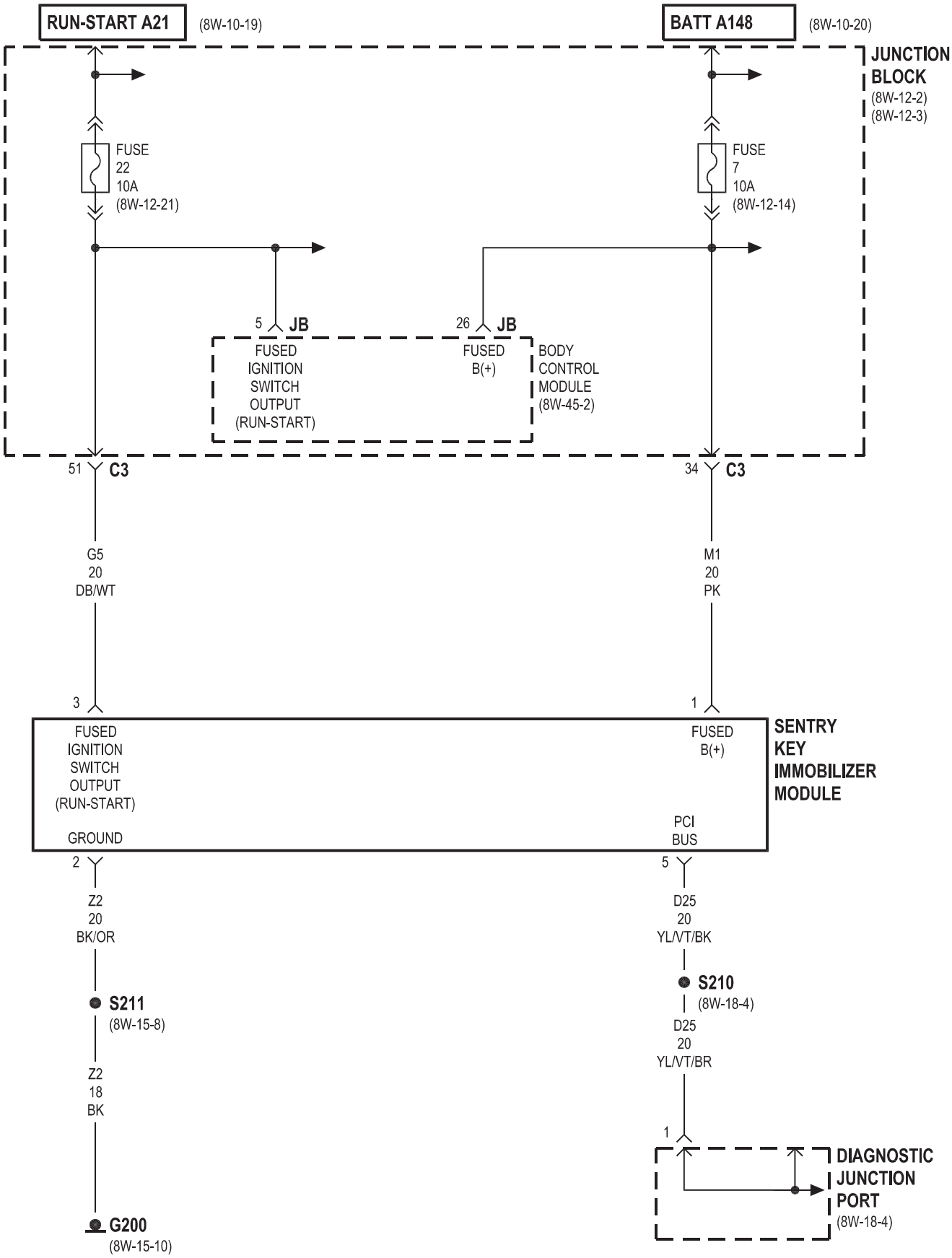
RUN-START A21
(8W-10-19)
BATT A148
(8W-10-20)
JUNCTION BLOCK
(8W-12-2)
(8W-12-3)
FUSE 22 10A (8W-12-21)
FUSE 7 10A (8W-12-14)
5 JB
26 JB
FUSED IGNITION SWITCH OUTPUT (RUN-START)
FUSED B(+)
BODY CONTROL MODULE (8W-45-2)
51 C3
34 C3
G5 20 DB/WT
M1 20 PK
3
1
FUSED IGNITION SWITCH OUTPUT (RUN-START)
FUSED B(+)
SENTRY KEY IMMOBILIZER MODULE
GROUND
PCI BUS
2
5
Z2 20 BK/OR
D25 20 YL/VT/BK
S210
(8W-18-4)
S211
(8W-15-8)
D25 20 YL/VT/BR
Z2 18 BK
1
DIAGNOSTIC JUNCTION PORT
(8W-18-4)
G200
(8W-15-10)

8W-40 INSTRUMENT CLUSTER

Component	Page
Airbag Control Module	8W-40-4
Body Control Module	8W-40-4, 5, 7
Combination Flasher	8W-40-3
Controller Antilock Brake	8W-40-4, 5, 6
Data Link Connector	8W-40-4
Diagnostic Junction Port	8W-40-4, 5, 6, 7
Fuse 17 (JB)	8W-40-2
Fuse 22 (JB)	8W-40-2, 3
G104	8W-40-3
G200	8W-40-2, 3
G301	8W-40-7
Instrument Cluster	8W-40-2, 3, 4, 5, 6, 7
Junction Block	8W-40-2, 3, 6, 7
Park Brake Switch	8W-40-5
Powertrain Control Module	8W-40-4, 5, 6, 7
Seat Belt Switch	8W-40-7
Transfer Case Switch	8W-40-3
Transmission Control Module	8W-40-4, 6

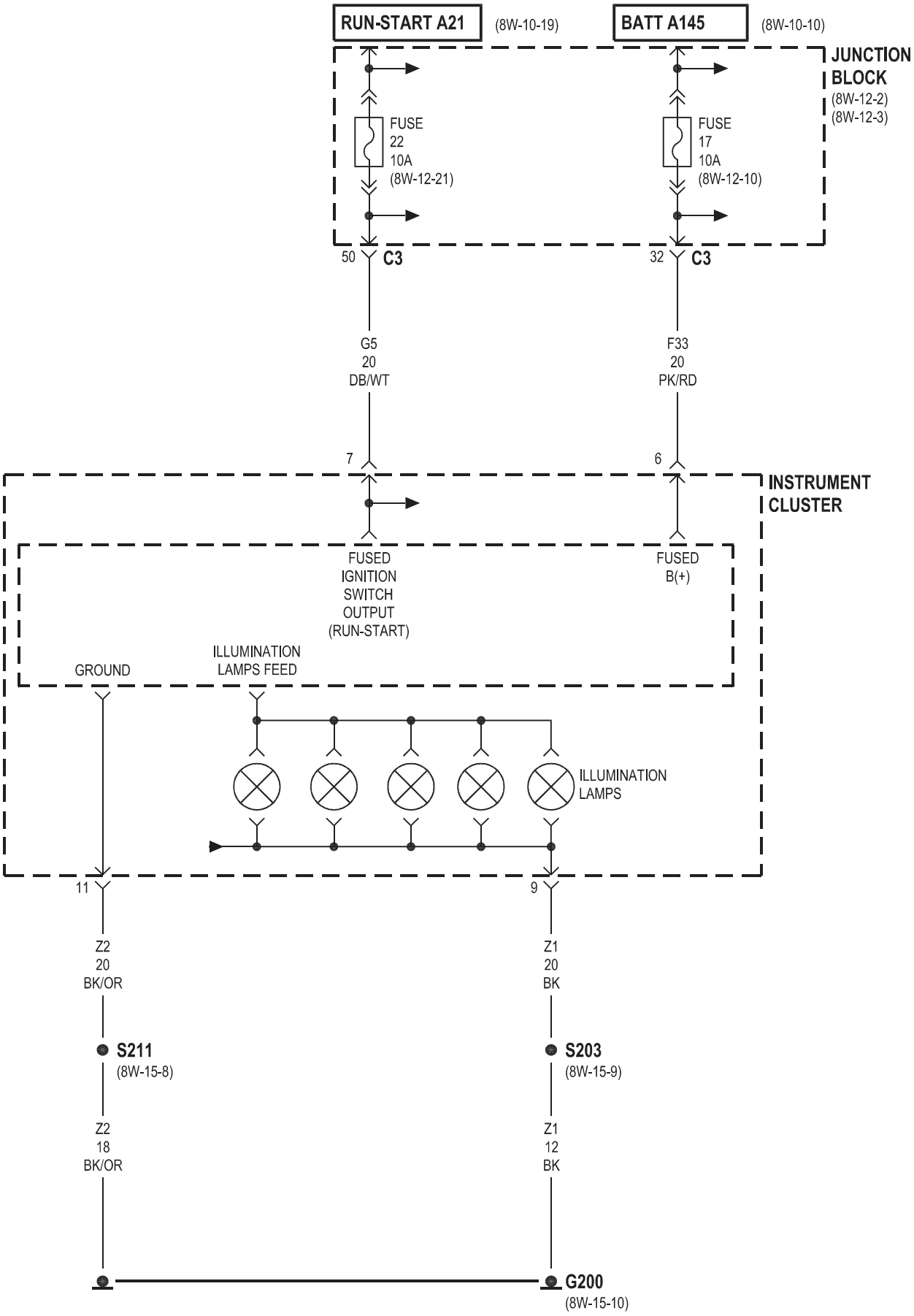
RUN-START A21
(8W-10-19)
BATT A145
(8W-10-10)
JUNCTION BLOCK
(8W-12-2)
(8W-12-3)
FUSE 22 10A (8W-12-21)
FUSE 17 10A (8W-12-10)
50
C3
32
C3
G5 20 DB/WT
F33 20 PK/RD
7
6
INSTRUMENT CLUSTER
FUSED IGNITION SWITCH OUTPUT (RUN-START)
FUSED B(+)
GROUND
ILLUMINATION LAMPS FEED
ILLUMINATION LAMPS
11
9
Z2 20 BK/OR
Z1 20 BK
S211
(8W-15-8)
S203
(8W-15-9)
Z2 18 BK/OR
Z1 12 BK
G200
(8W-15-10)

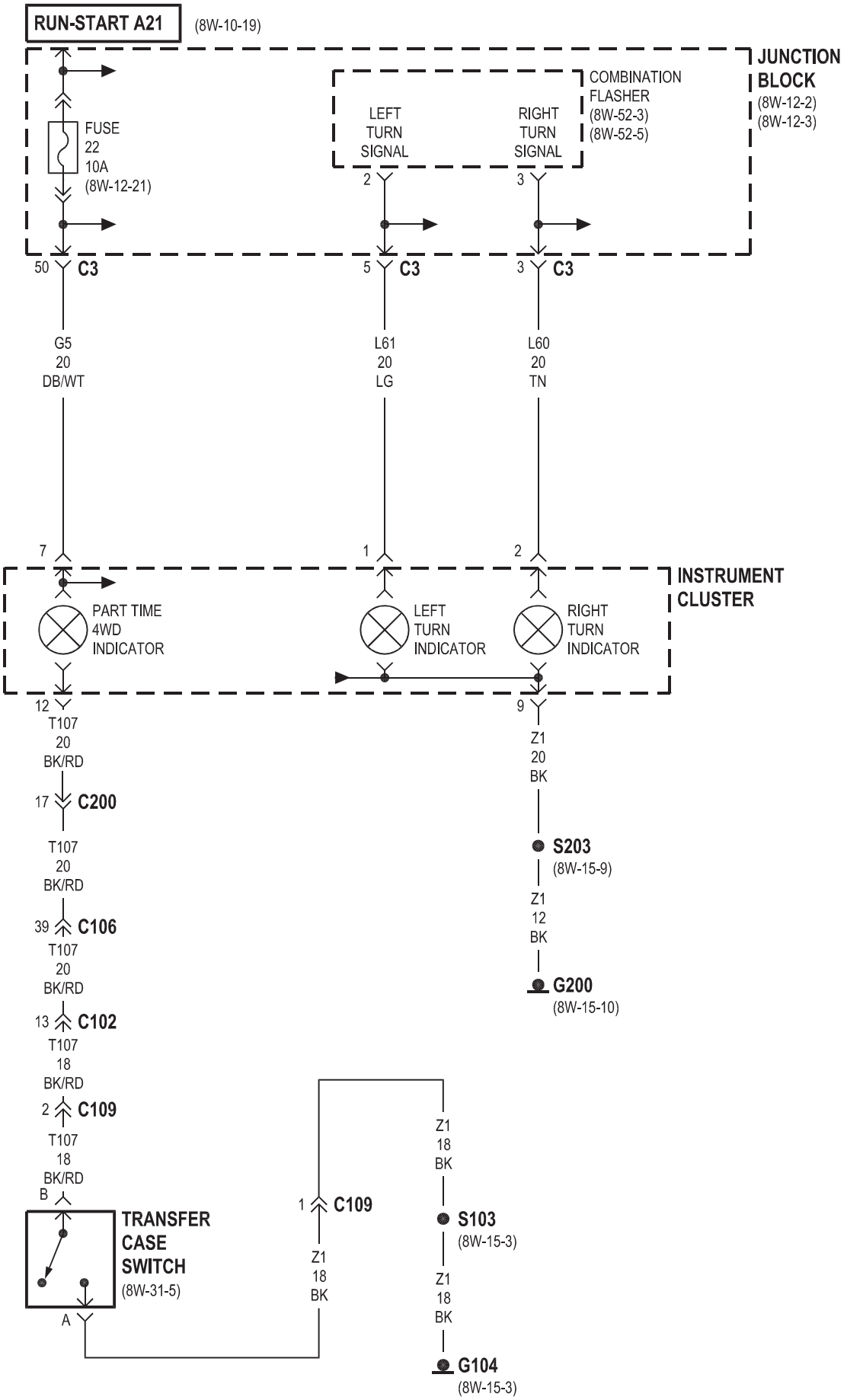
RUN-START A21
(8W-10-19)
JUNCTION BLOCK
(8W-12-2)
(8W-12-3)
COMBINATION FLASHER
(8W-52-3)
(8W-52-5)
LEFT TURN SIGNAL
RIGHT TURN SIGNAL
FUSE 22 10A
(8W-12-21)
2
3
50 C3
5 C3
3 C3
G5 20 DB/WT
L61 20 LG
L60 20 TN
7
1
2
INSTRUMENT CLUSTER
PART TIME 4WD INDICATOR
LEFT TURN INDICATOR
RIGHT TURN INDICATOR
12
9
T107 20 BK/RD
Z1 20 BK
17 C200
S203
(8W-15-9)
T107 20 BK/RD
Z1 12 BK
39 C106
G200
(8W-15-10)
T107 20 BK/RD
13 C102
T107 18 BK/RD
2 C109
T107 18 BK/RD
B
Z1 18 BK
1 C109
S103
(8W-15-3)
TRANSFER CASE SWITCH
(8W-31-5)
Z1 18 BK
Z1 18 BK
A
G104
(8W-15-3)

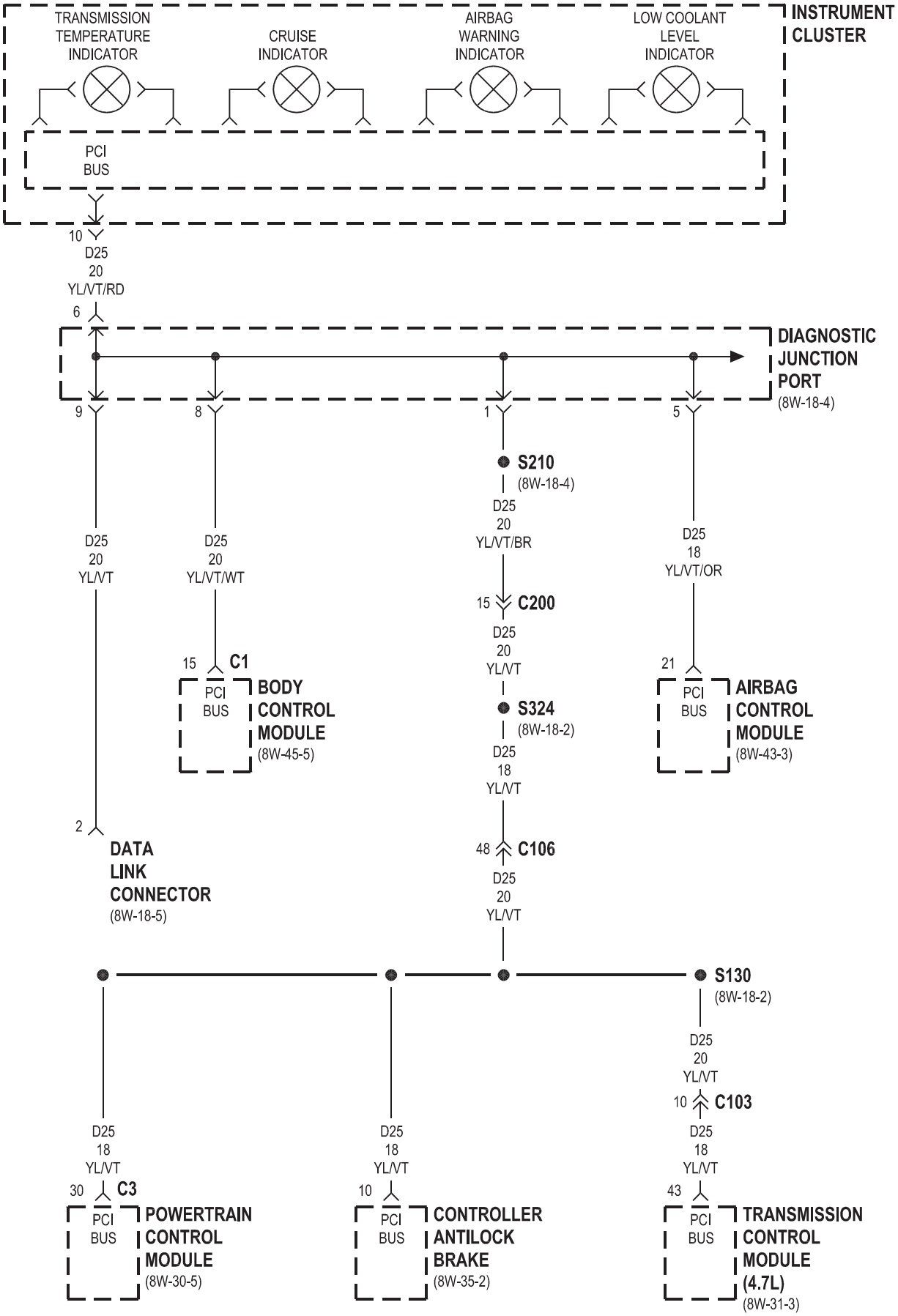
INSTRUMENT CLUSTER
TRANSMISSION TEMPERATURE INDICATOR
CRUISE INDICATOR
AIRBAG WARNING INDICATOR
LOW COOLANT LEVEL INDICATOR
PCI BUS
10
D25
20
YL/VT/RD
6
DIAGNOSTIC JUNCTION PORT
(8W-18-4)
9
8
1
5
S210
(8W-18-4)
D25
20
YL/VT
D25
20
YL/VT/WT
D25
20
YL/VT/BR
D25
18
YL/VT/OR
15
C200
D25
20
YL/VT
15
C1
PCI BUS
BODY CONTROL MODULE
(8W-45-5)
S324
(8W-18-2)
21
PCI BUS
AIRBAG CONTROL MODULE
(8W-43-3)
D25
18
YL/VT
2
DATA LINK CONNECTOR
(8W-18-5)
48
C106
D25
20
YL/VT
S130
(8W-18-2)
D25
20
YL/VT
10
C103
D25
18
YL/VT
D25
18
YL/VT
D25
18
YL/VT
30
C3
PCI BUS
POWERTRAIN CONTROL MODULE
(8W-30-5)
10
PCI BUS
CONTROLLER ANTILOCK BRAKE
(8W-35-2)
43
PCI BUS
TRANSMISSION CONTROL MODULE (4.7L)
(8W-31-3)

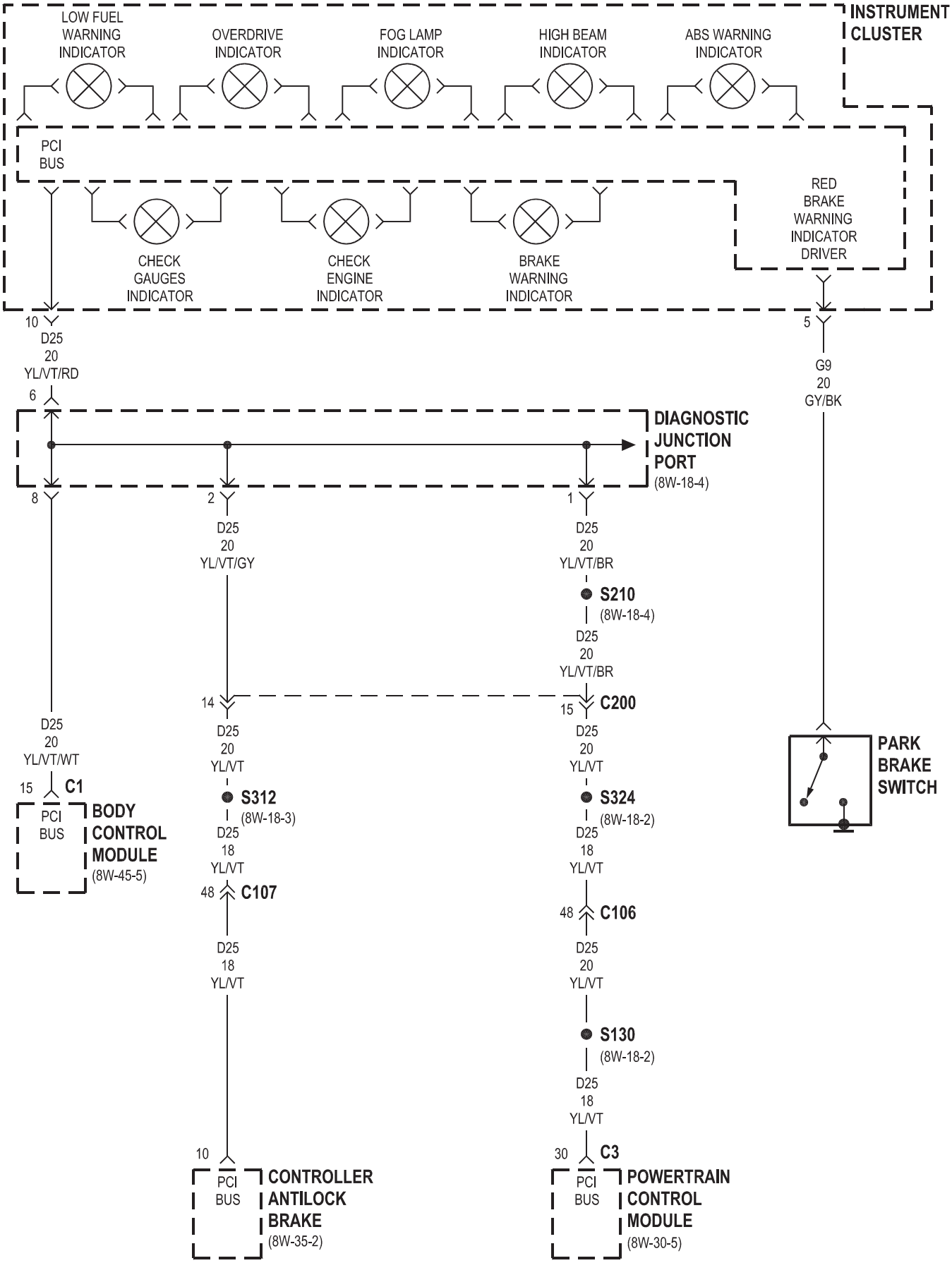
INSTRUMENT CLUSTER
LOW FUEL WARNING INDICATOR
OVERDRIVE INDICATOR
FOG LAMP INDICATOR
HIGH BEAM INDICATOR
ABS WARNING INDICATOR
PCI BUS
CHECK GAUGES INDICATOR
CHECK ENGINE INDICATOR
BRAKE WARNING INDICATOR
RED BRAKE WARNING INDICATOR DRIVER
10
D25
20
YL/VT/RD
6
5
G9
20
GY/BK
DIAGNOSTIC JUNCTION PORT
(8W-18-4)
8
2
1
D25
20
YL/VT/GY
D25
20
YL/VT/BR
S210
(8W-18-4)
D25
20
YL/VT/BR
14
15
C200
D25
20
YL/VT/WT
15
C1
PCI BUS
BODY CONTROL MODULE
(8W-45-5)
D25
20
YL/VT
S312
(8W-18-3)
D25
18
YL/VT
48
C107
D25
20
YL/VT
S324
(8W-18-2)
D25
18
YL/VT
48
C106
D25
20
YL/VT
S130
(8W-18-2)
D25
18
YL/VT
PARK BRAKE SWITCH
10
PCI BUS
CONTROLLER ANTILOCK BRAKE
(8W-35-2)
30
C3
PCI BUS
POWERTRAIN CONTROL MODULE
(8W-30-5)

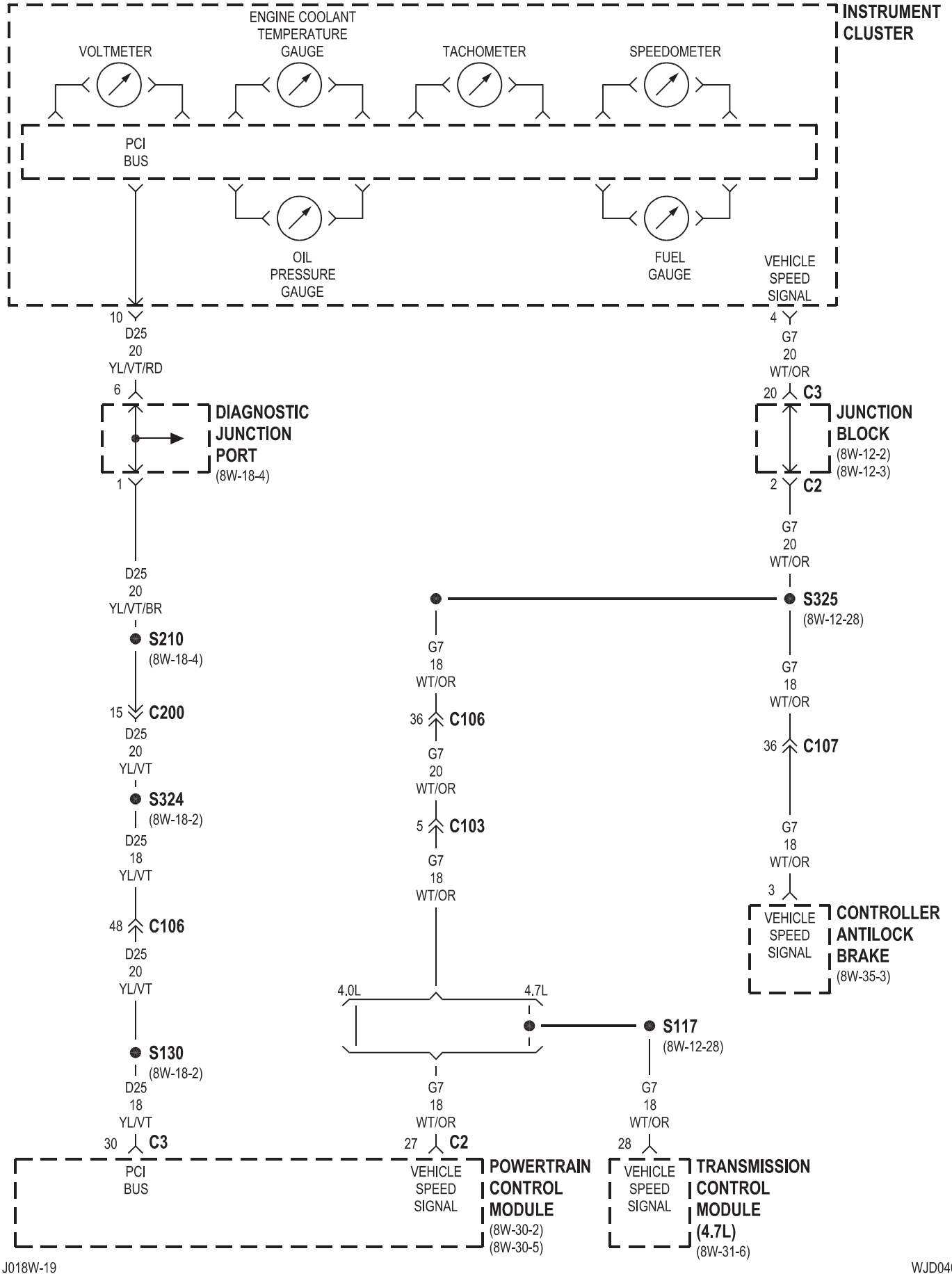
INSTRUMENT CLUSTER
VOLTMETER
ENGINE COOLANT TEMPERATURE GAUGE
TACHOMETER
SPEEDOMETER
PCI BUS
OIL PRESSURE GAUGE
FUEL GAUGE
VEHICLE SPEED SIGNAL
10
D25
20
YL/VT/RD
6
DIAGNOSTIC JUNCTION PORT
(8W-18-4)
1
D25
20
YL/VT/BR
S210
(8W-18-4)
15
C200
D25
20
YL/VT
S324
(8W-18-2)
D25
18
YL/VT
48
C106
D25
20
YL/VT
S130
(8W-18-2)
D25
18
YL/VT
30
C3
PCI BUS
4
G7
20
WT/OR
20
C3
JUNCTION BLOCK
(8W-12-2)
(8W-12-3)
2
C2
G7
20
WT/OR
S325
(8W-12-28)
G7
18
WT/OR
36
C106
G7
20
WT/OR
5
C103
G7
18
WT/OR
G7
18
WT/OR
36
C107
G7
18
WT/OR
3
VEHICLE SPEED SIGNAL
CONTROLLER ANTILOCK BRAKE
(8W-35-3)
4.0L
4.7L
S117
(8W-12-28)
G7
18
WT/OR
27
C2
VEHICLE SPEED SIGNAL
POWERTRAIN CONTROL MODULE
(8W-30-2)
(8W-30-5)
G7
18
WT/OR
28
VEHICLE SPEED SIGNAL
TRANSMISSION CONTROL MODULE (4.7L)
(8W-31-6)

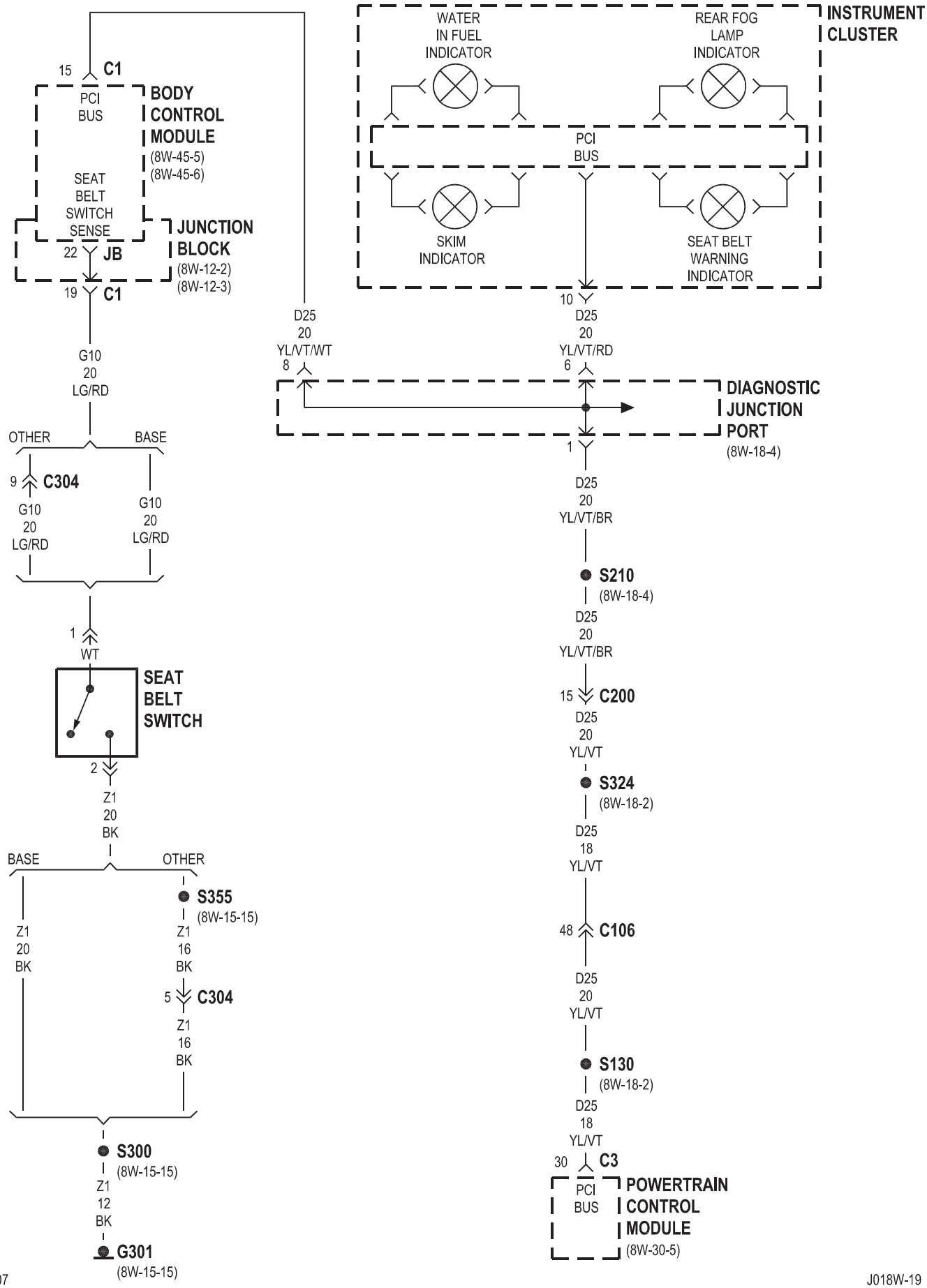
INSTRUMENT CLUSTER
WATER IN FUEL INDICATOR
REAR FOG LAMP INDICATOR
PCI BUS
SKIM INDICATOR
SEAT BELT WARNING INDICATOR
BODY CONTROL MODULE
(8W-45-5)
(8W-45-6)
15 C1
PCI BUS
SEAT BELT SWITCH SENSE
JUNCTION BLOCK
(8W-12-2)
(8W-12-3)
22 JB
19 C1
G10 20 LG/RD
D25 20 YL/VT/WT 8
10 D25 20 YL/VT/RD 6
DIAGNOSTIC JUNCTION PORT
(8W-18-4)
1
D25 20 YL/VT/BR
OTHER
BASE
9 C304
G10 20 LG/RD
G10 20 LG/RD
1 WT
SEAT BELT SWITCH
2
Z1 20 BK
S210
(8W-18-4)
D25 20 YL/VT/BR
15 C200
D25 20 YL/VT
S324
(8W-18-2)
D25 18 YL/VT
48 C106
D25 20 YL/VT
S130
(8W-18-2)
D25 18 YL/VT
30 C3
PCI BUS
POWERTRAIN CONTROL MODULE
(8W-30-5)
BASE
OTHER
Z1 20 BK
S355
(8W-15-15)
Z1 16 BK
5 C304
Z1 16 BK
S300
(8W-15-15)
Z1 12 BK
G301
(8W-15-15)

8W-41 HORN/CIGAR LIGHTER/POWER OUTLET

Component	Page
Body Control Module	8W-41-2
Cigar Lighter	8W-41-3
Cigar Lighter Relay	8W-41-3
Circuit Breaker	8W-41-3
Clockspring	8W-41-2
Front Power Outlet	8W-41-4
Fuse 18 (PDC)	8W-41-2
Fuse 9 (JB)	8W-41-4
Fuse 26 (JB)	8W-41-3
Fuse 29 (JB)	8W-41-3
G108	8W-41-2
G200	8W-41-3, 4
G300	8W-41-4
Horn No. 1	8W-41-2
Horn No. 2	8W-41-2
Horn Relay	8W-41-2
Horn Switch	8W-41-2
Junction Block	8W-41-2, 3, 4
Power Connector	8W-41-4
Power Distribution Center	8W-41-2
Rear Power Outlet	8W-41-4
Trailer Tow Circuit Breaker	8W-41-3

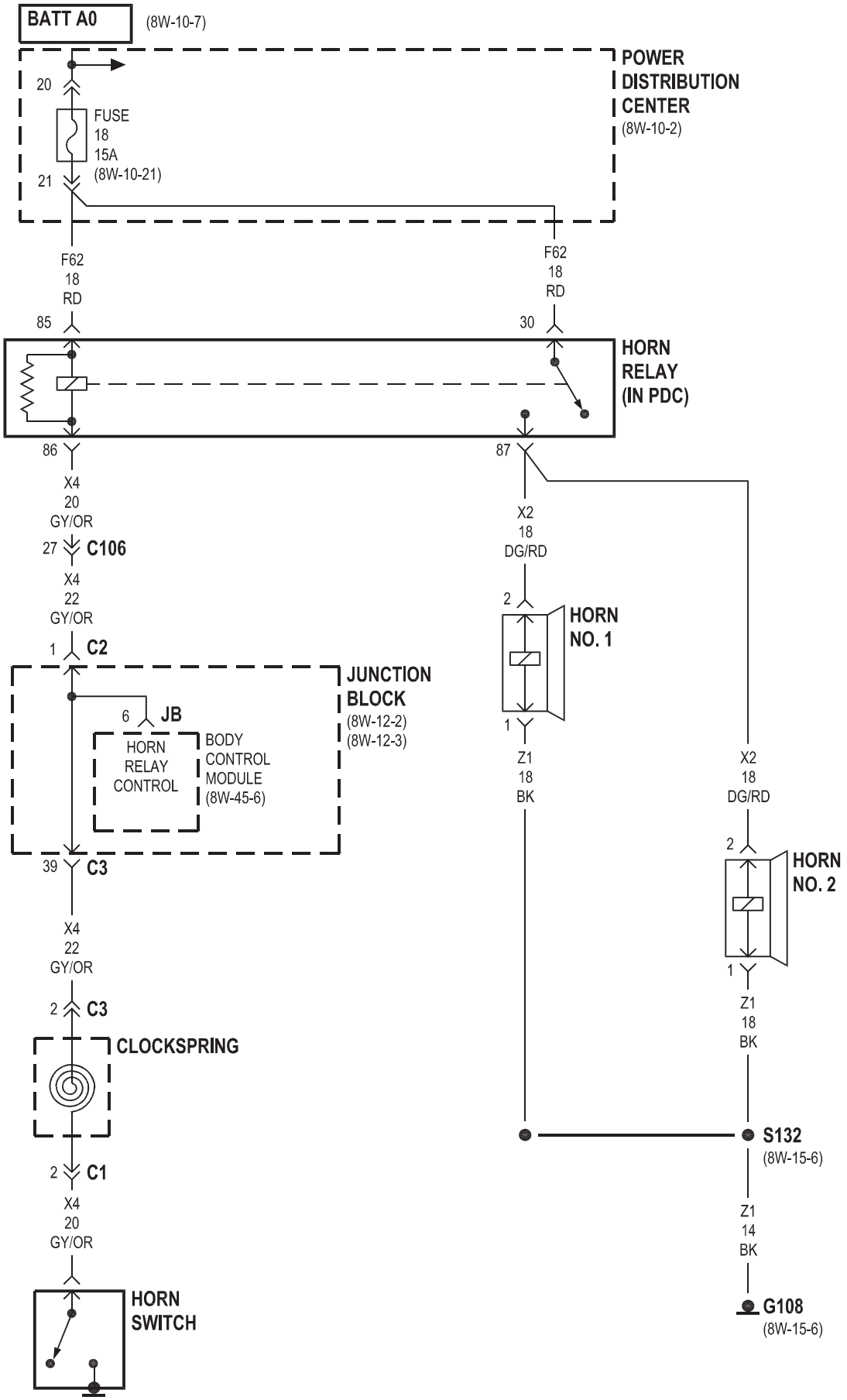
BATT A0
(8W-10-7)
POWER DISTRIBUTION CENTER
(8W-10-2)
20
FUSE 18 15A
(8W-10-21)
21
F62 18 RD
F62 18 RD
85
30
HORN RELAY (IN PDC)
86
87
X4 20 GY/OR
27
C106
X4 22 GY/OR
1
C2
X2 18 DG/RD
2
HORN NO. 1
1
Z1 18 BK
JUNCTION BLOCK
(8W-12-2)
(8W-12-3)
6
JB
HORN RELAY CONTROL
BODY CONTROL MODULE
(8W-45-6)
39
C3
X2 18 DG/RD
2
HORN NO. 2
1
Z1 18 BK
X4 22 GY/OR
2
C3
CLOCKSPRING
S132
(8W-15-6)
2
C1
X4 20 GY/OR
Z1 14 BK
HORN SWITCH
G108
(8W-15-6)

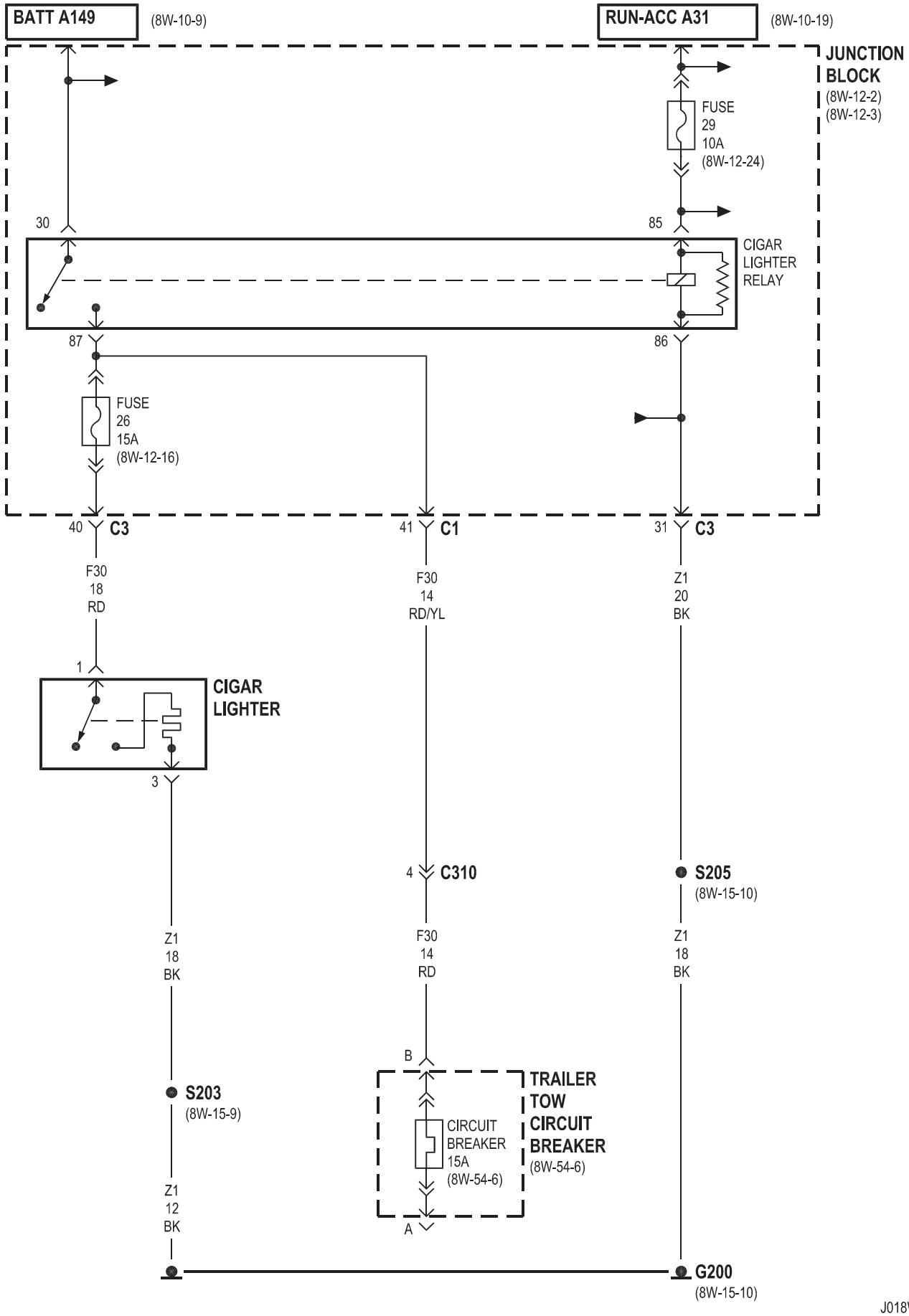
BATT A149
(8W-10-9)
RUN-ACC A31
(8W-10-19)
JUNCTION BLOCK
(8W-12-2)
(8W-12-3)
FUSE 29 10A (8W-12-24)
30
85
CIGAR LIGHTER RELAY
87
86
FUSE 26 15A (8W-12-16)
40 C3
41 C1
31 C3
F30 18 RD
F30 14 RD/YL
Z1 20 BK
1
CIGAR LIGHTER
3
4 C310
S205
(8W-15-10)
Z1 18 BK
F30 14 RD
Z1 18 BK
B
S203
(8W-15-9)
TRAILER TOW CIRCUIT BREAKER
(8W-54-6)
CIRCUIT BREAKER 15A (8W-54-6)
A
Z1 12 BK
G200
(8W-15-10)

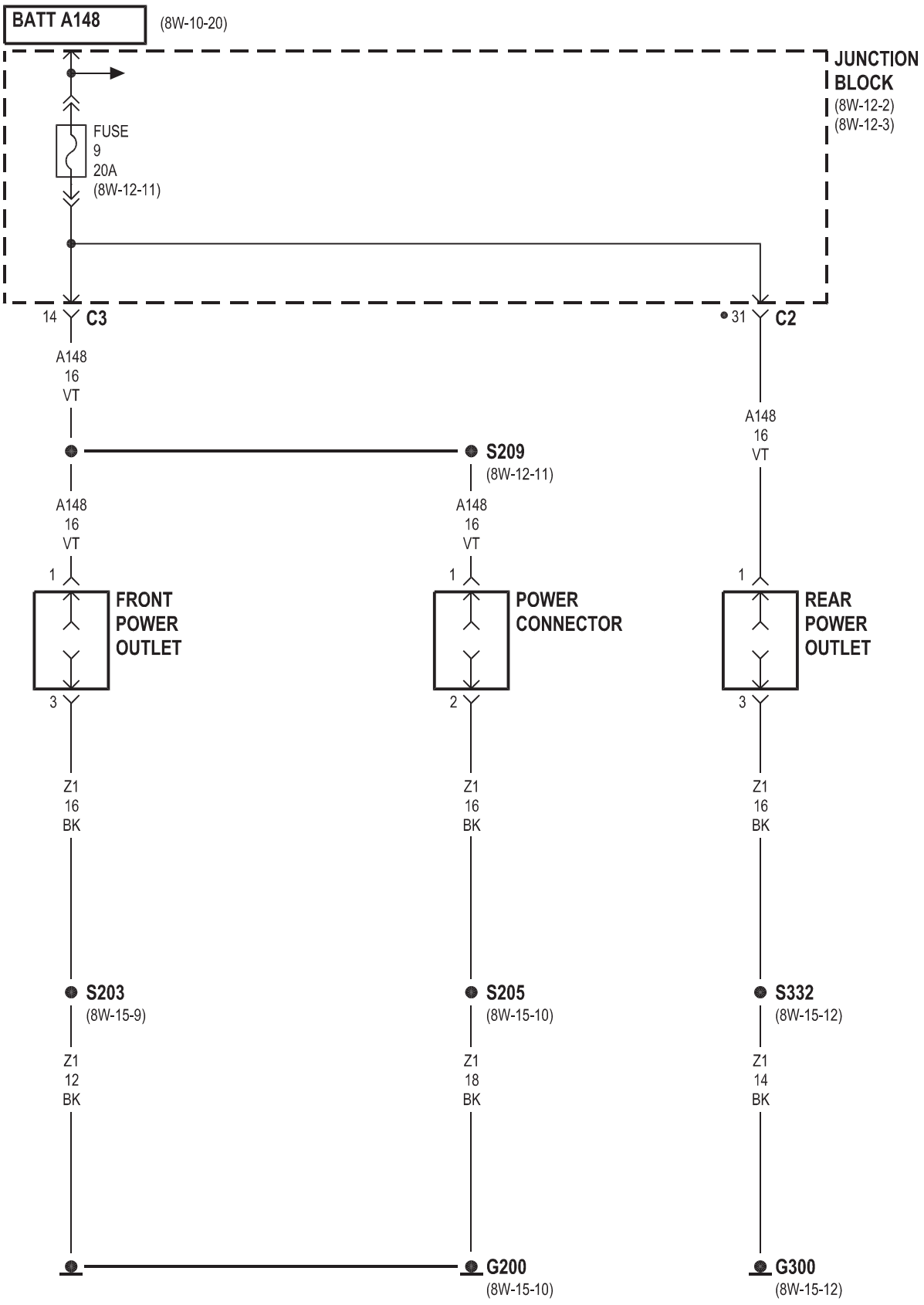
BATT A148
(8W-10-20)
JUNCTION BLOCK
(8W-12-2)
(8W-12-3)
FUSE
9
20A
(8W-12-11)
14
C3
31
C2
A148
16
VT
S209
(8W-12-11)
A148
16
VT
A148
16
VT
A148
16
VT
1
1
1
FRONT POWER OUTLET
POWER CONNECTOR
REAR POWER OUTLET
3
2
3
Z1
16
BK
Z1
16
BK
Z1
16
BK
S203
(8W-15-9)
S205
(8W-15-10)
S332
(8W-15-12)
Z1
12
BK
Z1
18
BK
Z1
14
BK
G200
(8W-15-10)
G300
(8W-15-12)
POWER SEATS

8W-42 AIR CONDITIONING-HEATER

Component	Page
A/C Compressor Clutch	8W-42-3
A/C Compressor Clutch Relay	8W-42-3
A/C High Pressure Switch	8W-42-9
A/C Low Pressure Switch	8W-42-9
A/C Pressure Transducer	8W-42-10
Automatic Shut Down Relay	8W-42-10
Automatic Zone Control Module	8W-42-2, 4, 5, 6
Blower Motor	8W-42-2, 5, 7
Blower Motor Controller	8W-42-2, 5
Blower Motor Resistor Block	8W-42-7
Body Control Module	8W-42-4, 5, 7, 8
Diagnostic Junction Port	8W-42-4
Driver Blend Door Motor/Actuator	8W-42-6
Fuse 1 (PDC)	8W-42-2, 5, 7
Fuse 10 (PDC)	8W-42-9
Fuse 16 (PDC)	8W-42-10
Fuse 21 (PDC)	8W-42-3
Fuse 7 (JB)	8W-42-5
Fuse 11 (JB)	8W-42-4, 8
Fuse 20 (JB)	8W-42-2, 8
Fuse 21 (JB)	8W-42-3
G104	8W-42-3
G108	8W-42-9
G200	8W-42-2, 5, 8
Hydraulic Cooling Module	8W-42-10
Junction Block	8W-42-2, 3, 4, 5, 8
Manual Temperature Control	8W-42-2, 7, 8
Mode Door Motor/Actuator	8W-42-6
Oxygen Sensor Downstream Relay	8W-42-10
Passenger Blend Door Motor/Actuator	8W-42-6
Power Distribution Center	8W-42-2, 3, 5, 7, 9, 10
Powertrain Control Module	8W-42-3, 9, 10
Radiator Fan Motor	8W-42-9
Radiator Fan Relay	8W-42-9
Rear Window Defogger	8W-42-4, 8
Rear Window Defogger Relay	8W-42-4, 8
Recirculation Door Motor/Actuator	8W-42-6
Temperature Valve Actuator	8W-42-8

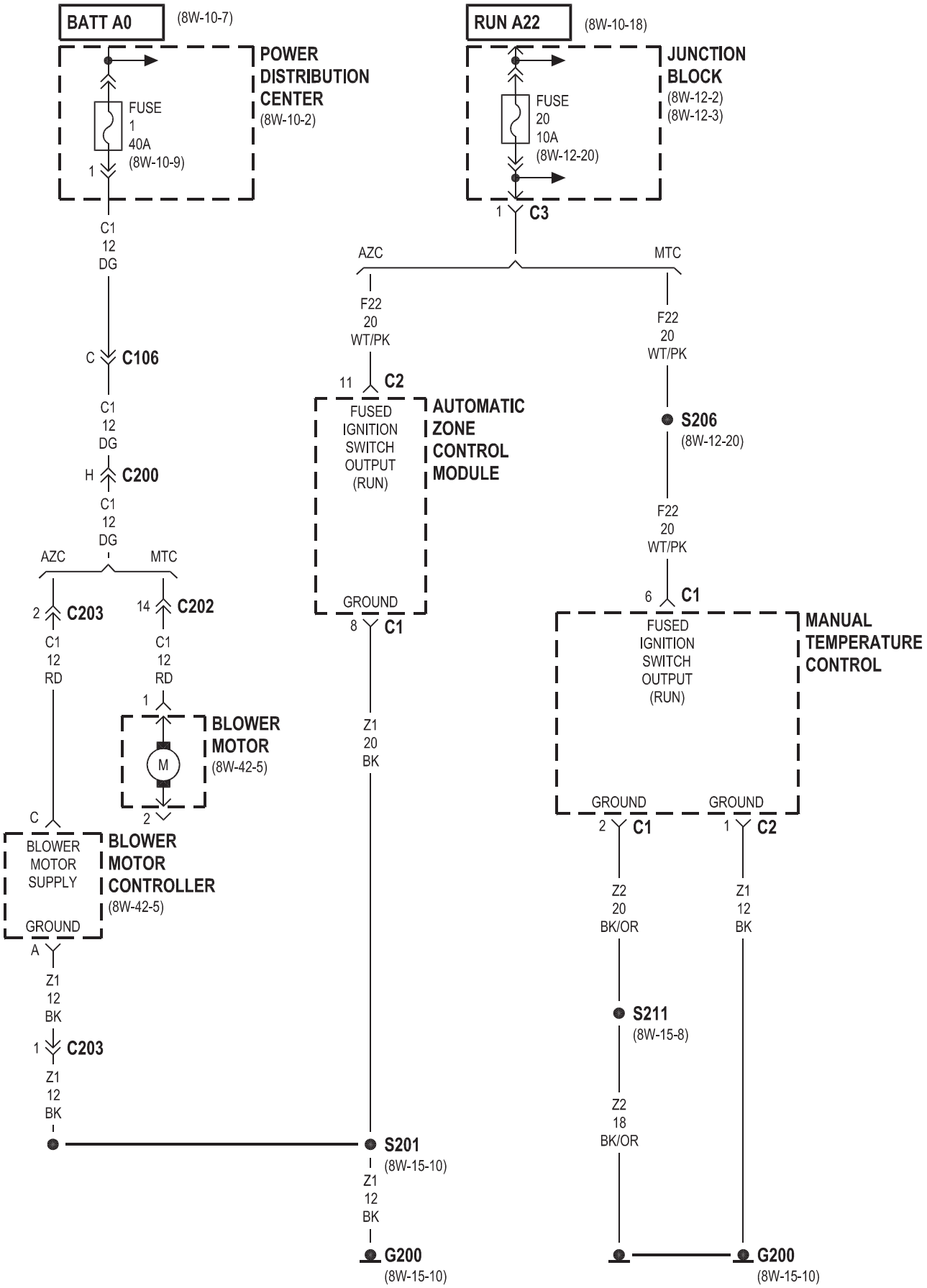
BATT A0
(8W-10-7)
POWER DISTRIBUTION CENTER
(8W-10-2)
FUSE 1 40A
(8W-10-9)
1
C1 12 DG
C
C106
C1 12 DG
H
C200
C1 12 DG
AZC
MTC
2
C203
14
C202
C1 12 RD
C1 12 RD
1
BLOWER MOTOR
(8W-42-5)
M
2
C
BLOWER MOTOR SUPPLY
GROUND
BLOWER MOTOR CONTROLLER
(8W-42-5)
A
Z1 12 BK
1
C203
Z1 12 BK
S201
(8W-15-10)
Z1 12 BK
G200
(8W-15-10)
RUN A22
(8W-10-18)
JUNCTION BLOCK
(8W-12-2)
(8W-12-3)
FUSE 20 10A
(8W-12-20)
1
C3
AZC
MTC
F22 20 WT/PK
11
C2
FUSED IGNITION SWITCH OUTPUT (RUN)
AUTOMATIC ZONE CONTROL MODULE
GROUND
8
C1
Z1 20 BK
F22 20 WT/PK
S206
(8W-12-20)
F22 20 WT/PK
6
C1
FUSED IGNITION SWITCH OUTPUT (RUN)
MANUAL TEMPERATURE CONTROL
GROUND
2
C1
GROUND
1
C2
Z2 20 BK/OR
Z1 12 BK
S211
(8W-15-8)
Z2 18 BK/OR
G200
(8W-15-10)

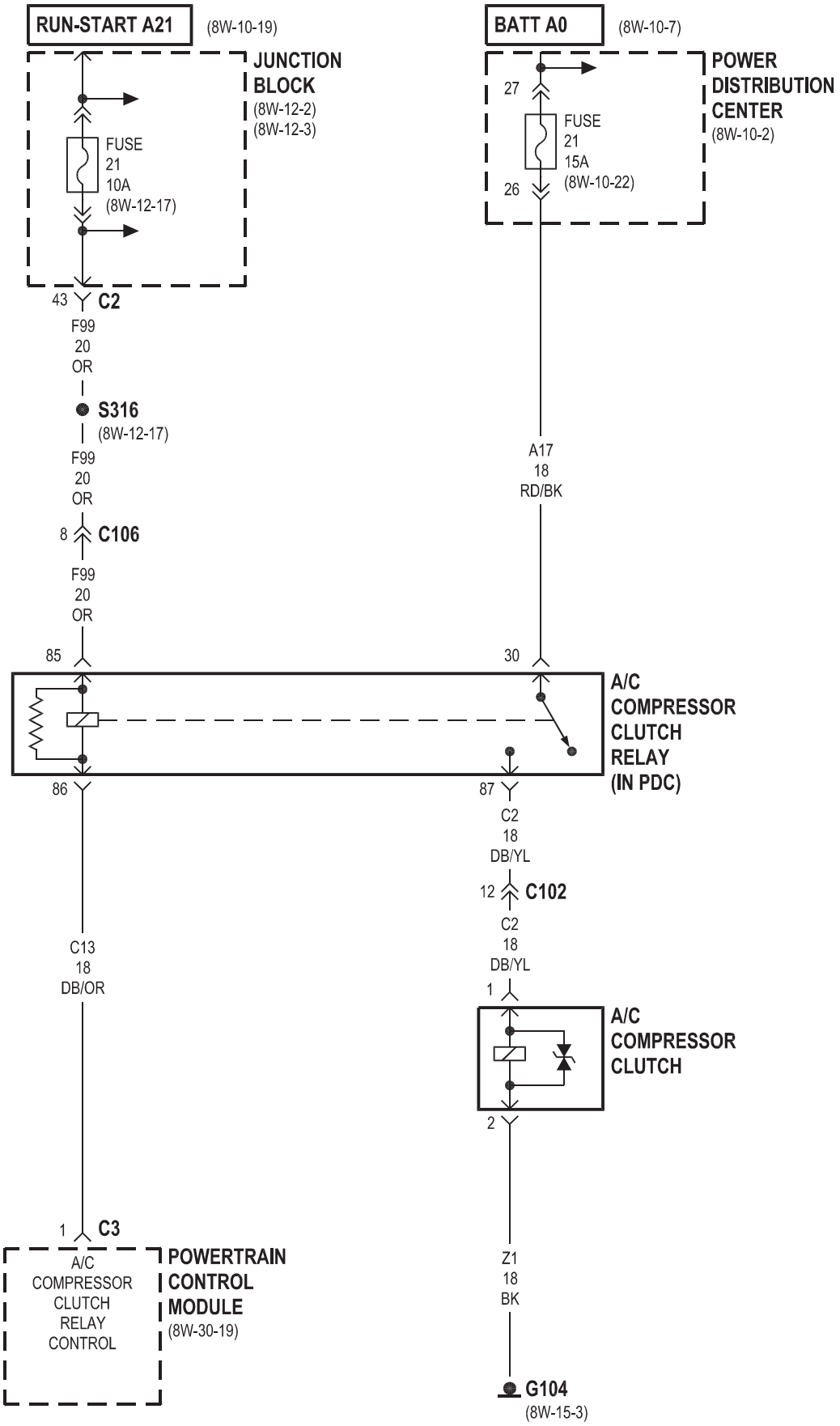
RUN-START A21
(8W-10-19)
JUNCTION BLOCK
(8W-12-2)
(8W-12-3)
FUSE
21
10A
(8W-12-17)
43
C2
F99
20
OR
S316
(8W-12-17)
F99
20
OR
8
C106
F99
20
OR
85
86
C13
18
DB/OR
1
C3
A/C COMPRESSOR CLUTCH RELAY CONTROL
POWERTRAIN CONTROL MODULE
(8W-30-19)
BATT A0
(8W-10-7)
POWER DISTRIBUTION CENTER
(8W-10-2)
27
FUSE
21
15A
(8W-10-22)
26
A17
18
RD/BK
30
A/C COMPRESSOR CLUTCH RELAY (IN PDC)
87
C2
18
DB/YL
12
C102
C2
18
DB/YL
1
A/C COMPRESSOR CLUTCH
2
Z1
18
BK
G104
(8W-15-3)

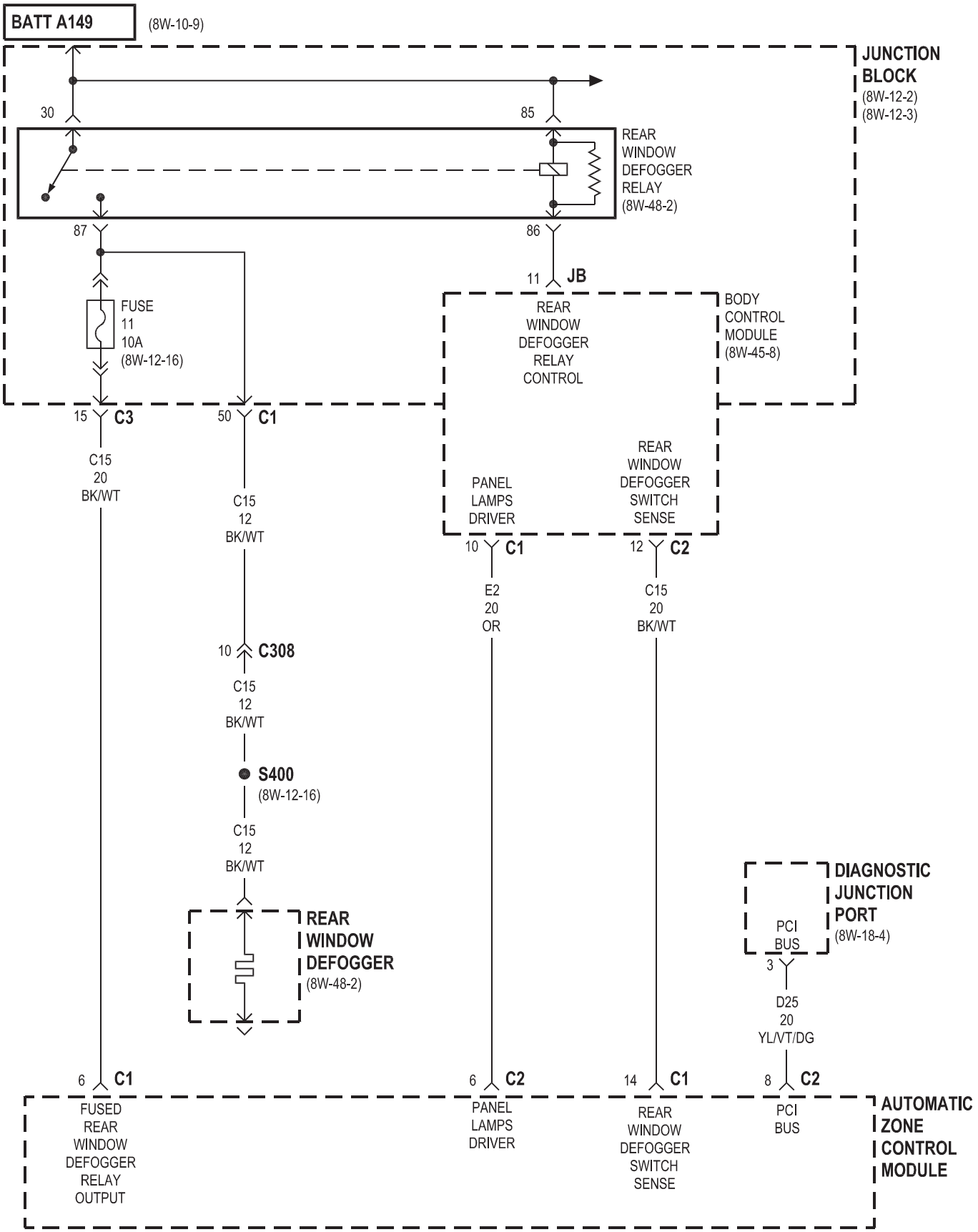
BATT A149
(8W-10-9)
JUNCTION BLOCK
(8W-12-2)
(8W-12-3)
30
85
REAR WINDOW DEFOGGER RELAY
(8W-48-2)
87
86
11
JB
FUSE 11 10A
(8W-12-16)
REAR WINDOW DEFOGGER RELAY CONTROL
BODY CONTROL MODULE
(8W-45-8)
15
C3
50
C1
C15 20 BK/WT
C15 12 BK/WT
PANEL LAMPS DRIVER
REAR WINDOW DEFOGGER SWITCH SENSE
10
C1
12
C2
E2 20 OR
C15 20 BK/WT
10
C308
C15 12 BK/WT
S400
(8W-12-16)
C15 12 BK/WT
REAR WINDOW DEFOGGER
(8W-48-2)
DIAGNOSTIC JUNCTION PORT
(8W-18-4)
PCI BUS
3
D25 20 YL/VT/DG
6
C1
6
C2
14
C1
8
C2
FUSED REAR WINDOW DEFOGGER RELAY OUTPUT
PANEL LAMPS DRIVER
REAR WINDOW DEFOGGER SWITCH SENSE
PCI BUS
AUTOMATIC ZONE CONTROL MODULE

AZC

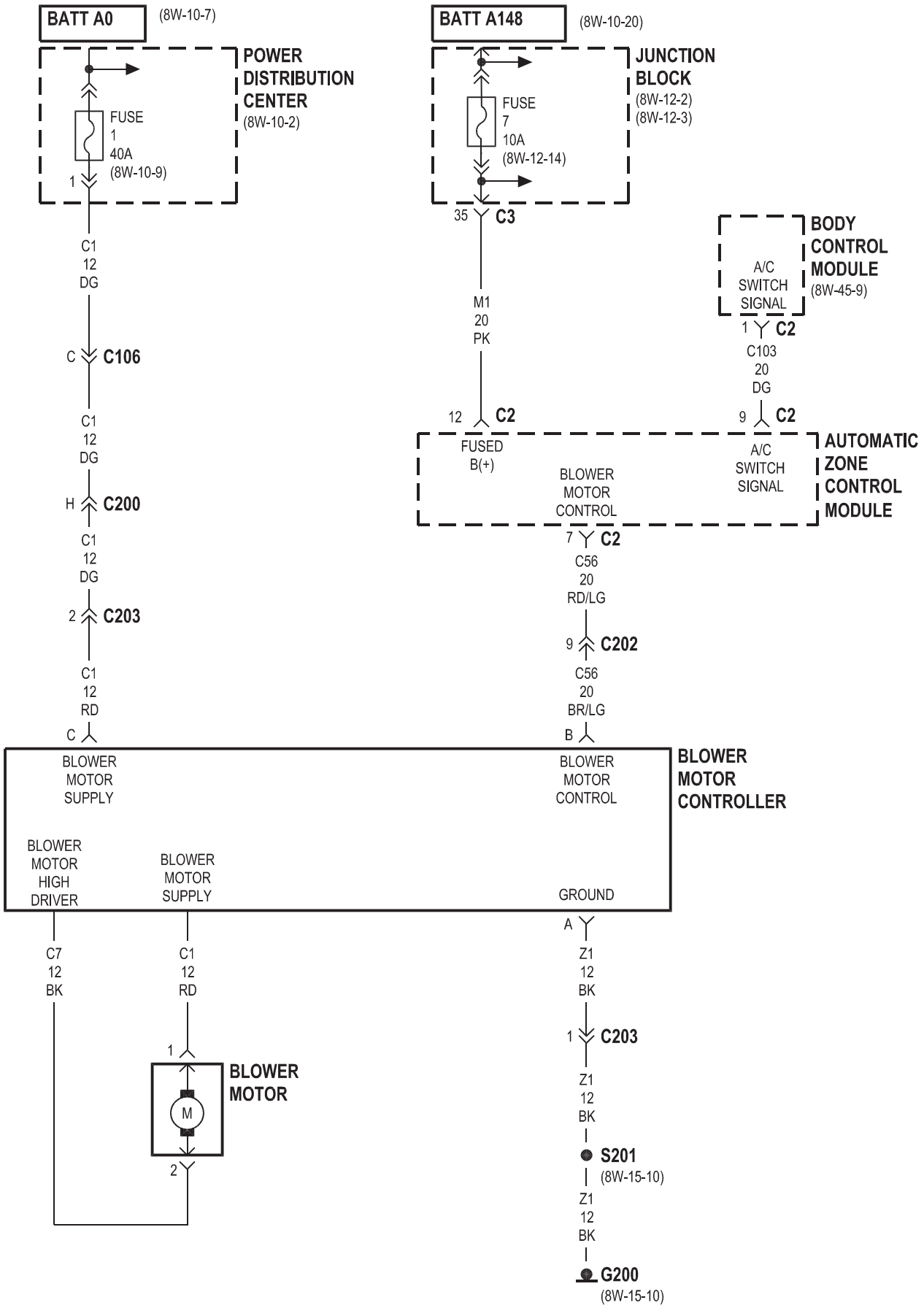
BATT A0
(8W-10-7)
POWER DISTRIBUTION CENTER
(8W-10-2)
FUSE
1
40A
(8W-10-9)
1
C1
12
DG
C
C106
C1
12
DG
H
C200
C1
12
DG
2
C203
C1
12
RD
C
BATT A148
(8W-10-20)
JUNCTION BLOCK
(8W-12-2)
(8W-12-3)
FUSE
7
10A
(8W-12-14)
35
C3
M1
20
PK
12
C2
FUSED
B(+)
BODY CONTROL MODULE
(8W-45-9)
A/C
SWITCH
SIGNAL
1
C2
C103
20
DG
9
C2
A/C
SWITCH
SIGNAL
AUTOMATIC ZONE CONTROL MODULE
BLOWER
MOTOR
CONTROL
7
C2
C56
20
RD/LG
9
C202
C56
20
BR/LG
B
BLOWER MOTOR CONTROLLER
BLOWER
MOTOR
SUPPLY
BLOWER
MOTOR
CONTROL
BLOWER
MOTOR
HIGH
DRIVER
BLOWER
MOTOR
SUPPLY
GROUND
A
C7
12
BK
C1
12
RD
Z1
12
BK
1
C203
Z1
12
BK
S201
(8W-15-10)
Z1
12
BK
G200
(8W-15-10)
1
BLOWER MOTOR
M
2

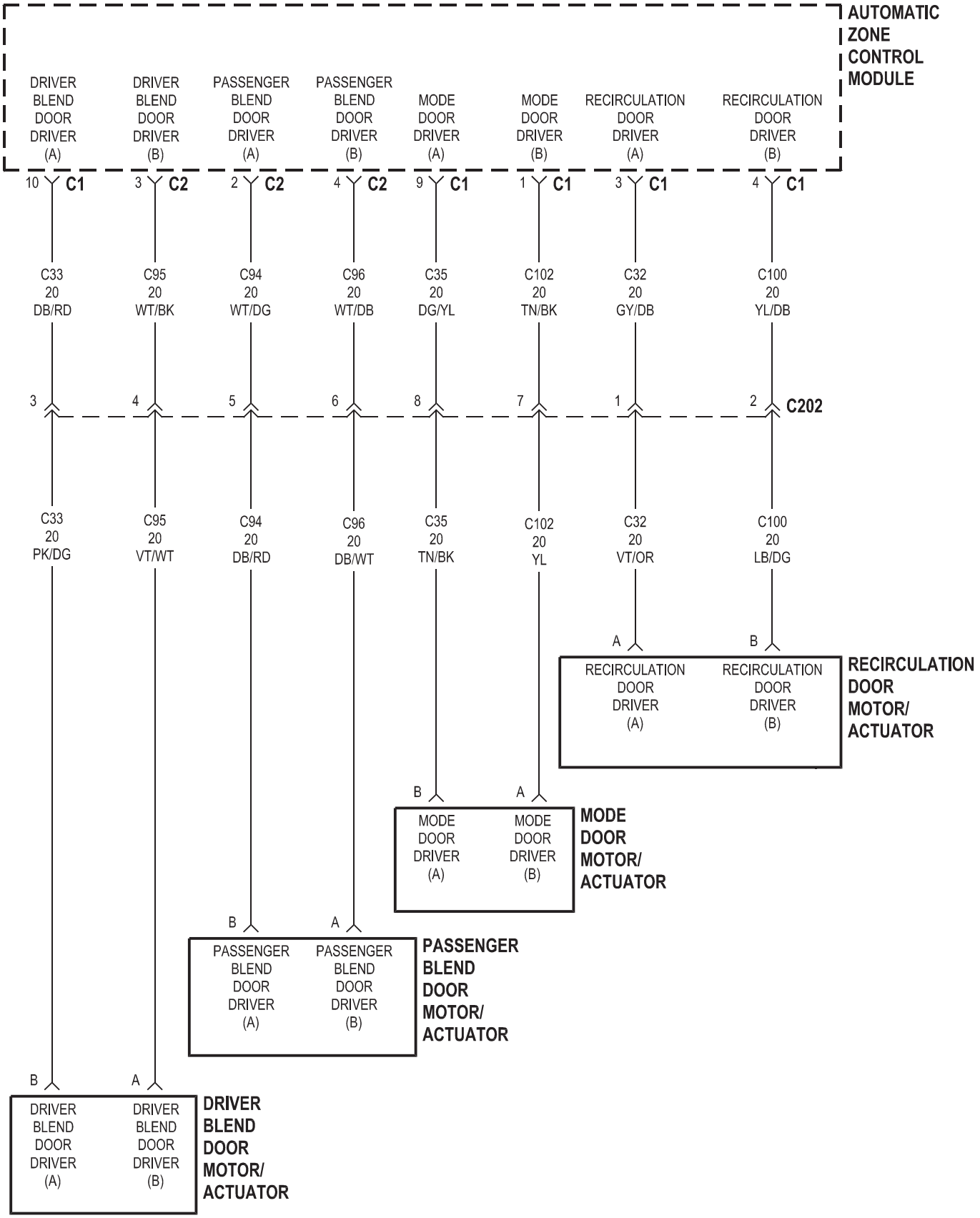
AUTOMATIC ZONE CONTROL MODULE
DRIVER BLEND DOOR DRIVER (A)
DRIVER BLEND DOOR DRIVER (B)
PASSENGER BLEND DOOR DRIVER (A)
PASSENGER BLEND DOOR DRIVER (B)
MODE DOOR DRIVER (A)
MODE DOOR DRIVER (B)
RECIRCULATION DOOR DRIVER (A)
RECIRCULATION DOOR DRIVER (B)
10 C1
3 C2
2 C2
4 C2
9 C1
1 C1
3 C1
4 C1
C33 20 DB/RD
C95 20 WT/BK
C94 20 WT/DG
C96 20 WT/DB
C35 20 DG/YL
C102 20 TN/BK
C32 20 GY/DB
C100 20 YL/DB
3
4
5
6
8
7
1
2
C202
C33 20 PK/DG
C95 20 VT/WT
C94 20 DB/RD
C96 20 DB/WT
C35 20 TN/BK
C102 20 YL
C32 20 VT/OR
C100 20 LB/DG
A
B
RECIRCULATION DOOR DRIVER (A)
RECIRCULATION DOOR DRIVER (B)
RECIRCULATION DOOR MOTOR/ ACTUATOR
B
A
MODE DOOR DRIVER (A)
MODE DOOR DRIVER (B)
MODE DOOR MOTOR/ ACTUATOR
B
A
PASSENGER BLEND DOOR DRIVER (A)
PASSENGER BLEND DOOR DRIVER (B)
PASSENGER BLEND DOOR MOTOR/ ACTUATOR
B
A
DRIVER BLEND DOOR DRIVER (A)
DRIVER BLEND DOOR DRIVER (B)
DRIVER BLEND DOOR MOTOR/ ACTUATOR

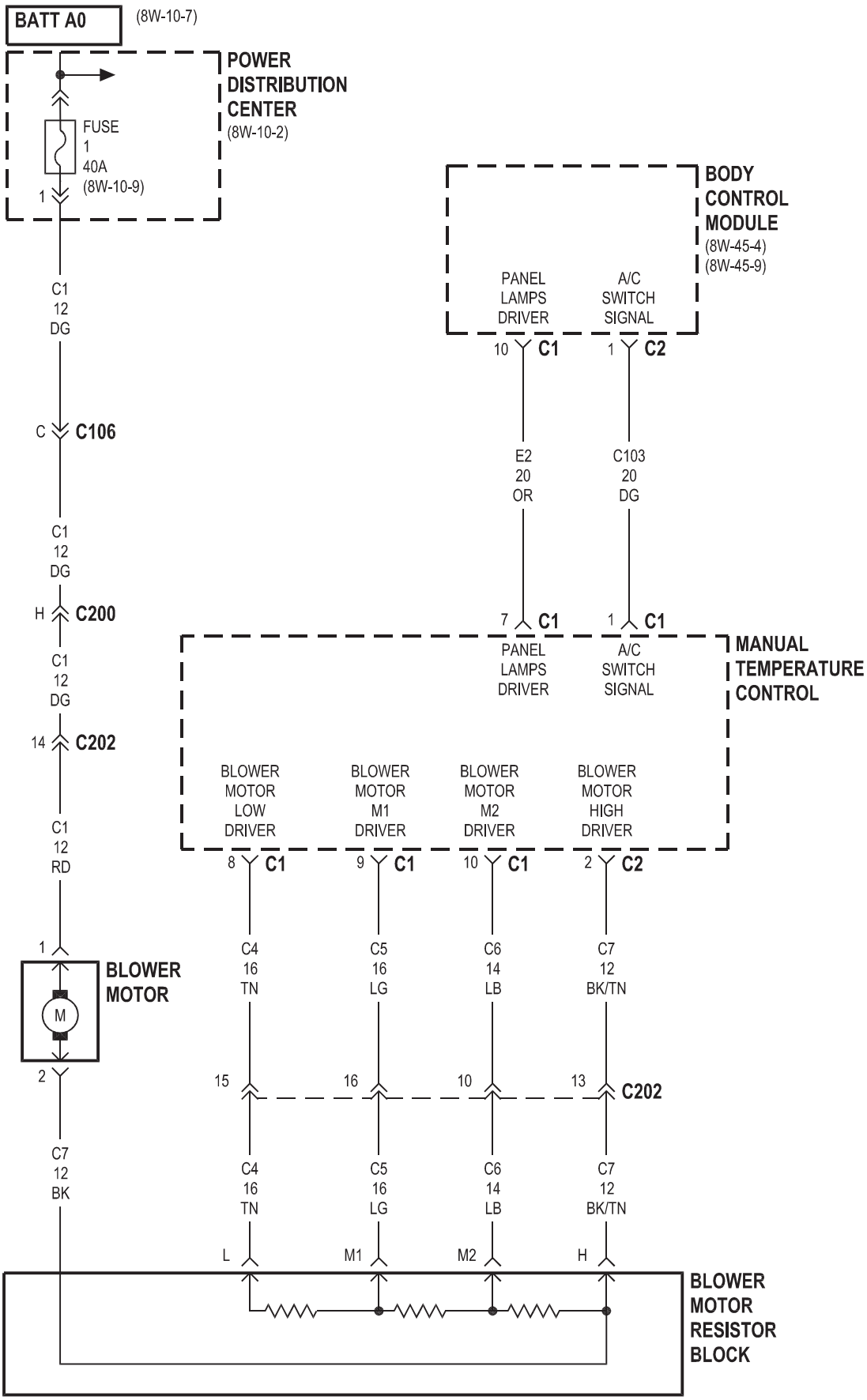
BATT A0
(8W-10-7)
POWER DISTRIBUTION CENTER
(8W-10-2)
FUSE
1
40A
(8W-10-9)
1
C1
12
DG
C
C106
C1
12
DG
H
C200
C1
12
DG
14
C202
C1
12
RD
1
BLOWER MOTOR
M
2
C7
12
BK
BODY CONTROL MODULE
(8W-45-4)
(8W-45-9)
PANEL LAMPS DRIVER
A/C SWITCH SIGNAL
10
C1
1
C2
E2
20
OR
C103
20
DG
7
C1
1
C1
MANUAL TEMPERATURE CONTROL
PANEL LAMPS DRIVER
A/C SWITCH SIGNAL
BLOWER MOTOR LOW DRIVER
BLOWER MOTOR M1 DRIVER
BLOWER MOTOR M2 DRIVER
BLOWER MOTOR HIGH DRIVER
8
C1
9
C1
10
C1
2
C2
C4
16
TN
C5
16
LG
C6
14
LB
C7
12
BK/TN
15
16
10
13
C202
C4
16
TN
C5
16
LG
C6
14
LB
C7
12
BK/TN
L
M1
M2
H
BLOWER MOTOR RESISTOR BLOCK

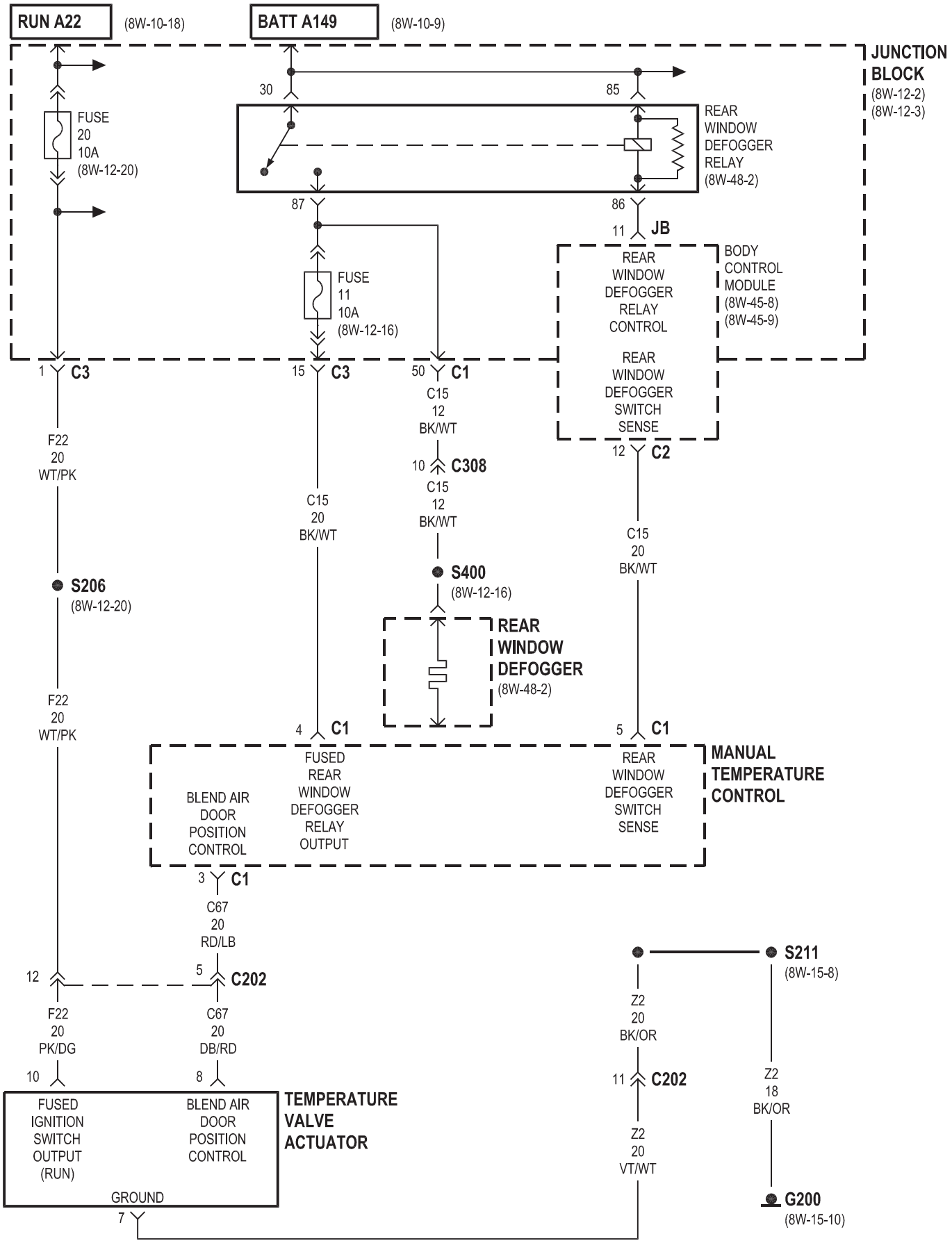
RUN A22
(8W-10-18)
BATT A149
(8W-10-9)
JUNCTION BLOCK
(8W-12-2)
(8W-12-3)
FUSE 20 10A (8W-12-20)
30
85
REAR WINDOW DEFOGGER RELAY (8W-48-2)
87
86
11 JB
FUSE 11 10A (8W-12-16)
REAR WINDOW DEFOGGER RELAY CONTROL
BODY CONTROL MODULE (8W-45-8) (8W-45-9)
REAR WINDOW DEFOGGER SWITCH SENSE
1 C3
15 C3
50 C1
C15 12 BK/WT
12 C2
10 C308
C15 12 BK/WT
F22 20 WT/PK
C15 20 BK/WT
C15 20 BK/WT
S206
(8W-12-20)
S400
(8W-12-16)
REAR WINDOW DEFOGGER
(8W-48-2)
F22 20 WT/PK
4 C1
5 C1
MANUAL TEMPERATURE CONTROL
BLEND AIR DOOR POSITION CONTROL
FUSED REAR WINDOW DEFOGGER RELAY OUTPUT
REAR WINDOW DEFOGGER SWITCH SENSE
3 C1
C67 20 RD/LB
12
5 C202
S211
(8W-15-8)
F22 20 PK/DG
C67 20 DB/RD
Z2 20 BK/OR
10
8
11 C202
Z2 18 BK/OR
FUSED IGNITION SWITCH OUTPUT (RUN)
BLEND AIR DOOR POSITION CONTROL
TEMPERATURE VALVE ACTUATOR
Z2 20 VT/WT
GROUND
7
G200
(8W-15-10)

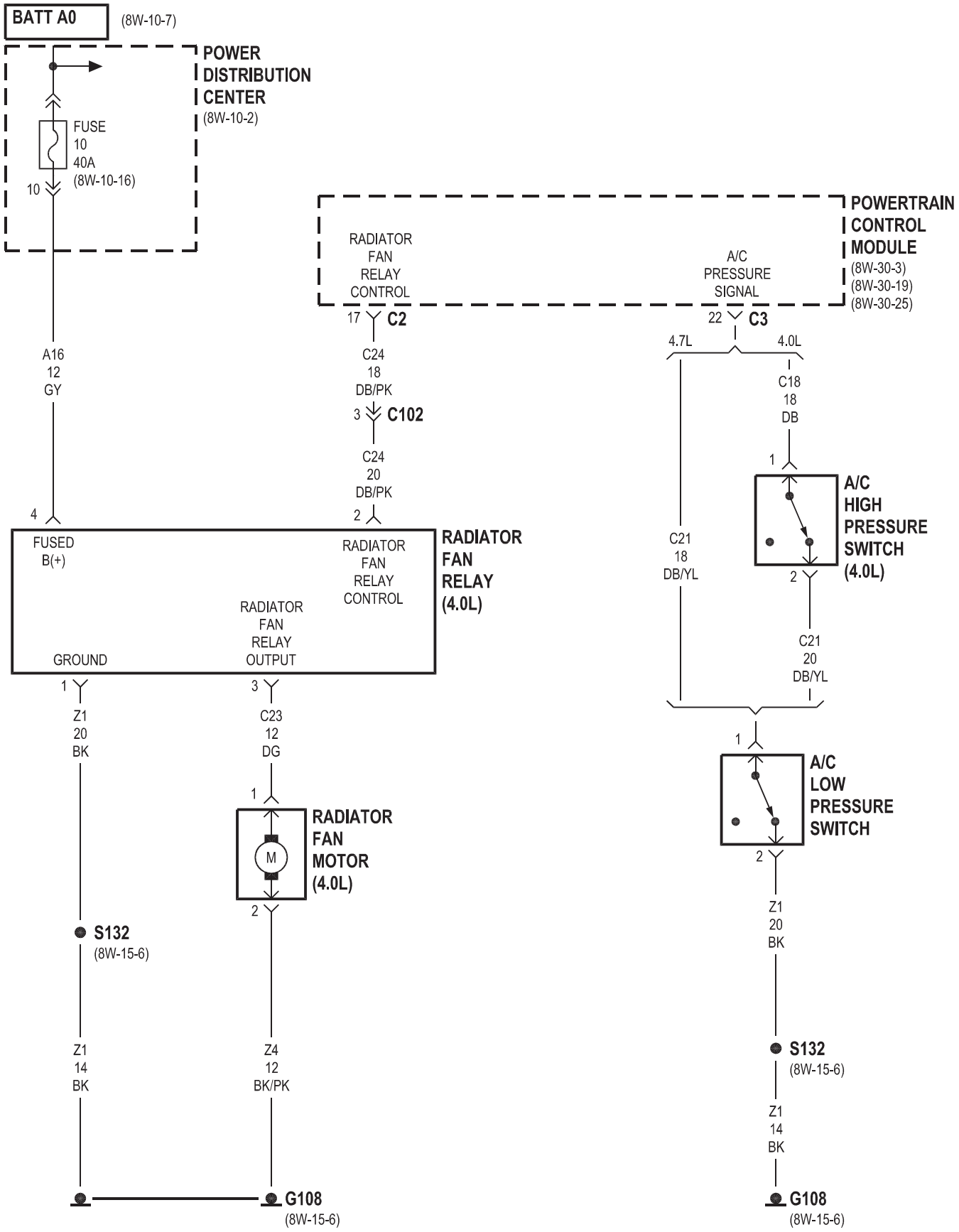
BATT A0
(8W-10-7)
POWER DISTRIBUTION CENTER
(8W-10-2)
FUSE 10 40A
(8W-10-16)
10
A16 12 GY
4
FUSED B(+)
GROUND
RADIATOR FAN RELAY OUTPUT
RADIATOR FAN RELAY CONTROL
2
RADIATOR FAN RELAY (4.0L)
1
Z1 20 BK
3
C23 12 DG
1
M
RADIATOR FAN MOTOR (4.0L)
2
S132
(8W-15-6)
Z1 14 BK
Z4 12 BK/PK
G108
(8W-15-6)
RADIATOR FAN RELAY CONTROL
17
C2
C24 18 DB/PK
3
C102
C24 20 DB/PK
POWERTRAIN CONTROL MODULE
(8W-30-3)
(8W-30-19)
(8W-30-25)
A/C PRESSURE SIGNAL
22
C3
4.7L
4.0L
C18 18 DB
1
A/C HIGH PRESSURE SWITCH (4.0L)
2
C21 18 DB/YL
C21 20 DB/YL
1
A/C LOW PRESSURE SWITCH
2
Z1 20 BK
S132
(8W-15-6)
Z1 14 BK
G108
(8W-15-6)

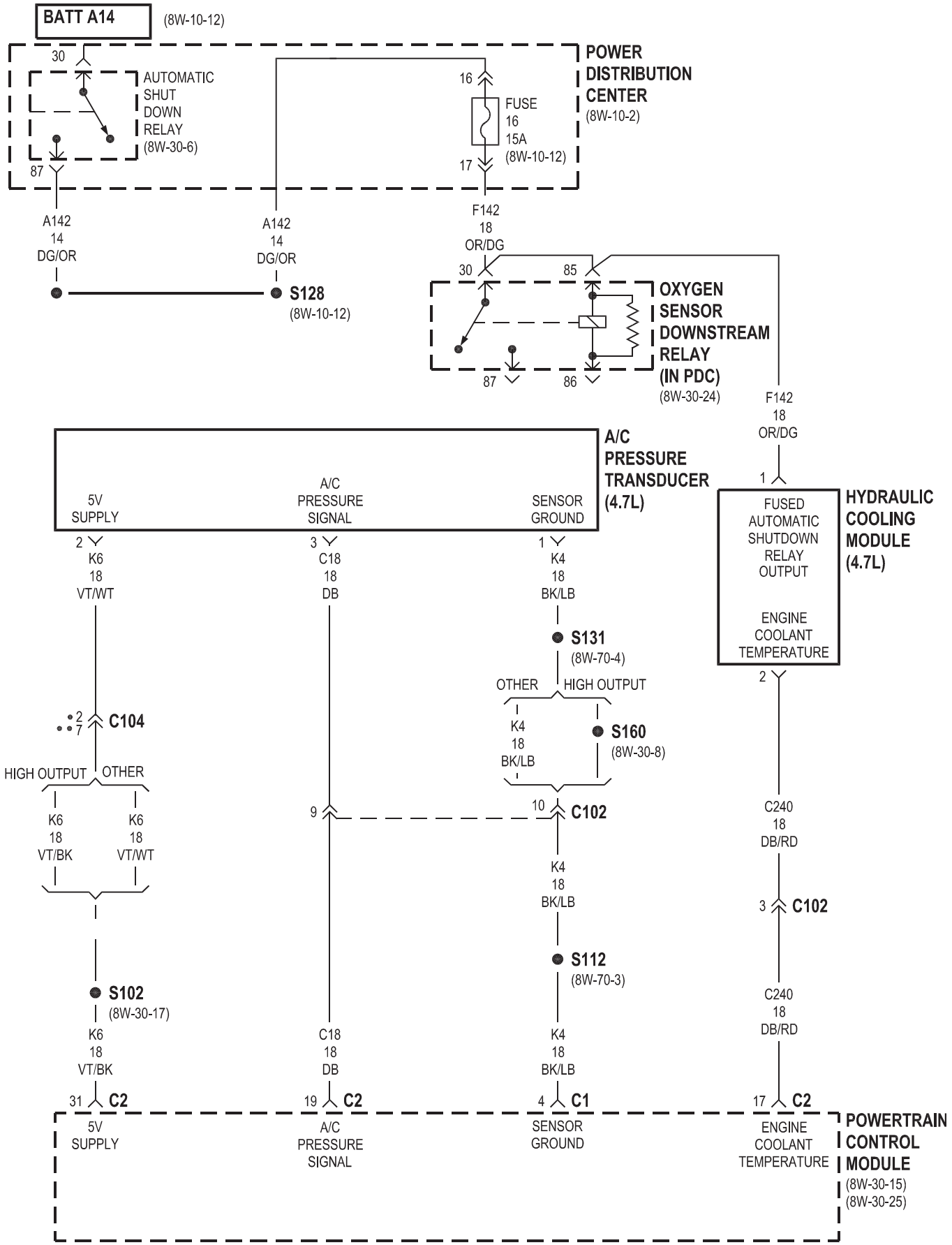
BATT A14
(8W-10-12)
30
AUTOMATIC SHUT DOWN RELAY (8W-30-6)
87
16
FUSE 16 15A (8W-10-12)
17
POWER DISTRIBUTION CENTER (8W-10-2)
A142 14 DG/OR
A142 14 DG/OR
S128 (8W-10-12)
F142 18 OR/DG
30
85
OXYGEN SENSOR DOWNSTREAM RELAY (IN PDC) (8W-30-24)
87
86
F142 18 OR/DG
A/C PRESSURE TRANSDUCER (4.7L)
5V SUPPLY
A/C PRESSURE SIGNAL
SENSOR GROUND
2
3
1
K6 18 VT/WT
C18 18 DB
K4 18 BK/LB
S131 (8W-70-4)
OTHER
HIGH OUTPUT
K4 18 BK/LB
S160 (8W-30-8)
2
7
C104
HIGH OUTPUT
OTHER
K6 18 VT/BK
K6 18 VT/WT
9
10
C102
K4 18 BK/LB
S112 (8W-70-3)
S102 (8W-30-17)
K6 18 VT/BK
C18 18 DB
K4 18 BK/LB
31
C2
19
C2
4
C1
5V SUPPLY
A/C PRESSURE SIGNAL
SENSOR GROUND
1
FUSED AUTOMATIC SHUTDOWN RELAY OUTPUT
ENGINE COOLANT TEMPERATURE
HYDRAULIC COOLING MODULE (4.7L)
2
C240 18 DB/RD
3
C102
C240 18 DB/RD
17
C2
ENGINE COOLANT TEMPERATURE
POWERTRAIN CONTROL MODULE (8W-30-15) (8W-30-25)
EXCEPT HIGH OUTPUT
HIGH OUTPUT

8W-43 AIRBAG SYSTEM

Component	Page
Airbag Control Module	8W-43-2, 3
Airbag Warning Indicator	8W-43-3
Clockspring	8W-43-2
Diagnostic Junction Port	8W-43-3
Driver Airbag	8W-43-2
Fuse 22 (JB)	8W-43-3
Fuse 32 (JB)	8W-43-2
Fuse 33 (JB)	8W-43-2
G200	8W-43-3
G201	8W-43-2
Instrument Cluster	8W-43-3
Junction Block	8W-43-2, 3
Passenger Airbag	8W-43-2

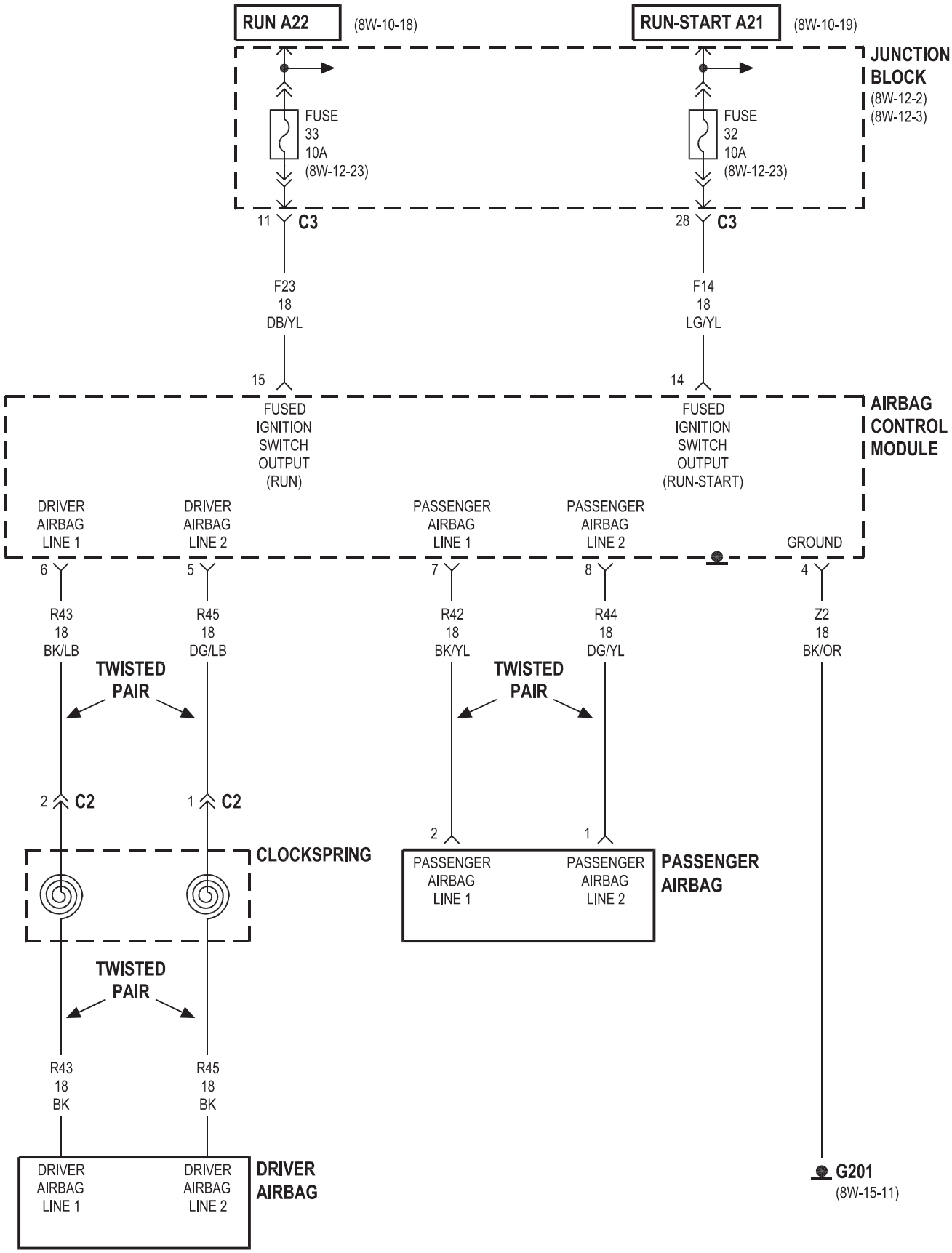
RUN A22
(8W-10-18)
RUN-START A21
(8W-10-19)
JUNCTION BLOCK
(8W-12-2)
(8W-12-3)
FUSE 33 10A (8W-12-23)
FUSE 32 10A (8W-12-23)
11 C3
28 C3
F23 18 DB/YL
F14 18 LG/YL
15
14
AIRBAG CONTROL MODULE
FUSED IGNITION SWITCH OUTPUT (RUN)
FUSED IGNITION SWITCH OUTPUT (RUN-START)
DRIVER AIRBAG LINE 1
DRIVER AIRBAG LINE 2
PASSENGER AIRBAG LINE 1
PASSENGER AIRBAG LINE 2
GROUND
6
5
7
8
4
R43 18 BK/LB
R45 18 DG/LB
R42 18 BK/YL
R44 18 DG/YL
Z2 18 BK/OR
TWISTED PAIR
TWISTED PAIR
2 C2
1 C2
2
1
CLOCKSPRING
PASSENGER AIRBAG LINE 1
PASSENGER AIRBAG LINE 2
PASSENGER AIRBAG
TWISTED PAIR
R43 18 BK
R45 18 BK
DRIVER AIRBAG LINE 1
DRIVER AIRBAG LINE 2
DRIVER AIRBAG
G201
(8W-15-11)

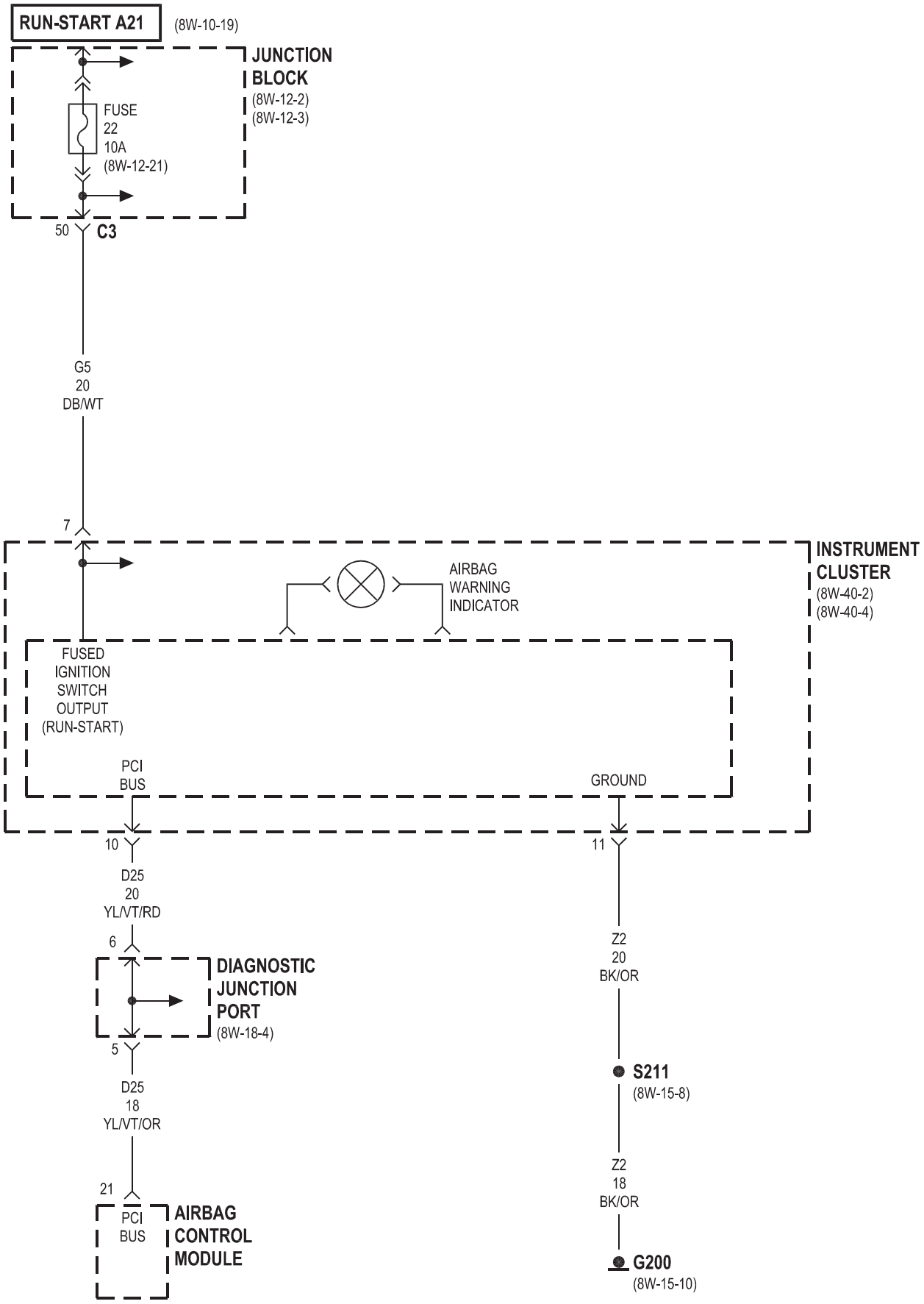
RUN-START A21
(8W-10-19)
JUNCTION BLOCK
(8W-12-2)
(8W-12-3)
FUSE
22
10A
(8W-12-21)
50
C3
G5
20
DB/WT
7
INSTRUMENT CLUSTER
(8W-40-2)
(8W-40-4)
AIRBAG WARNING INDICATOR
FUSED IGNITION SWITCH OUTPUT (RUN-START)
PCI BUS
GROUND
10
11
D25
20
YL/VT/RD
6
DIAGNOSTIC JUNCTION PORT
(8W-18-4)
5
D25
18
YL/VT/OR
21
PCI BUS
AIRBAG CONTROL MODULE
Z2
20
BK/OR
S211
(8W-15-8)
Z2
18
BK/OR
G200
(8W-15-10)

8W-44 INTERIOR LIGHTING

Component	Page
Ash Receiver Lamp	8W-44-10
Automatic Zone Control Module	8W-44-10
Body Control Module	8W-44-2, 3, 4, 5, 6, 8, 10
Cargo Lamp	8W-44-4
Driver Door Lock Motor/Ajar Switch	8W-44-7
Driver Door Module	8W-44-7, 9
Driver Front Door Courtesy Lamp	8W-44-9
Driver Heated Seat Switch	8W-44-10
Fuse 7 (JB)	8W-44-8
Fuse 8 (JB)	8W-44-2, 3, 4, 8
G106	8W-44-8
G200	8W-44-10
G300	8W-44-6, 7
G301	8W-44-5, 6
Glove Box Lamp	8W-44-8
Junction Block	8W-44-2, 3, 4, 5, 6, 8
Left Courtesy Lamp	8W-44-8
Left Door Handle Courtesy Lamp	8W-44-3, 4
Left Liftgate Ajar Switch	8W-44-5
Left Multi- Function Switch	8W-44-10
Left Rear Door Power Lock Motor/Ajar Switch	8W-44-6
Left Visor/Vanity Lamp	8W-44-2
Liftgate Flip-Up Ajar Switch	8W-44-5
Manual Temperature Control	8W-44-10
Overhead Map/Courtesy Lamp	8W-44-3, 4
Passenger Door Lock Motor/Ajar Switch	8W-44-7
Passenger Door Module	8W-44-7, 9
Passenger Front Door Courtesy Lamp	8W-44-9
Passenger Heated Seat Switch	8W-44-10
Radio	8W-44-10
Right Courtesy Lamp	8W-44-8
Right Door Handle Courtesy Lamp	8W-44-3, 4
Right Liftgate Ajar Switch	8W-44-5
Right Rear Door Power Lock Motor/Ajar Switch	8W-44-6
Right Visor/Vanity Lamp	8W-44-2
Transmission Range Indicator Illumination	8W-44-10
Underhood Lamp	8W-44-8

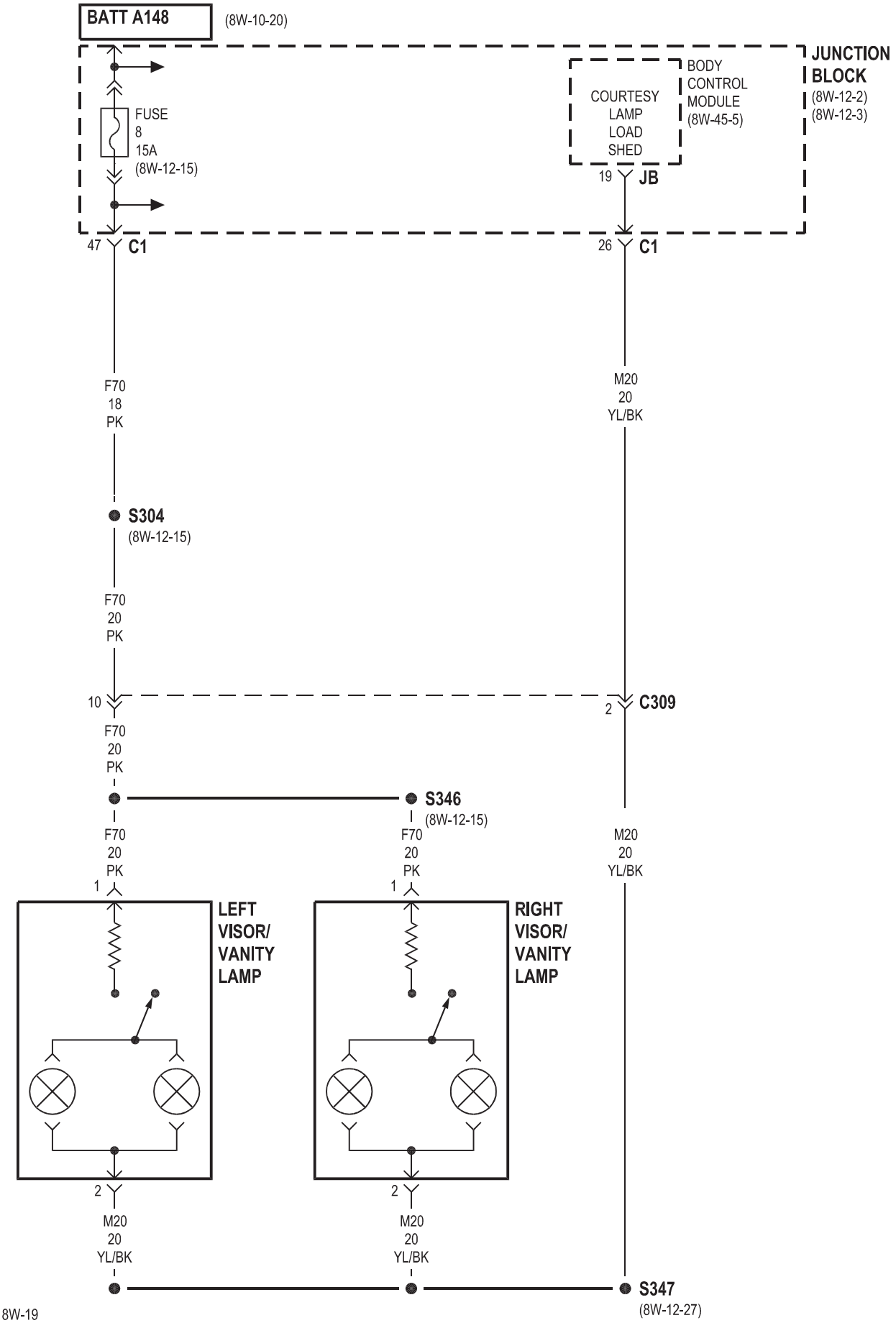
BATT A148
(8W-10-20)
JUNCTION BLOCK
(8W-12-2)
(8W-12-3)
FUSE
8
15A
(8W-12-15)
COURTESY LAMP LOAD SHED
BODY CONTROL MODULE
(8W-45-5)
19
JB
47
C1
26
C1
F70
18
PK
M20
20
YL/BK
S304
(8W-12-15)
F70
20
PK
10
2
C309
F70
20
PK
S346
(8W-12-15)
F70
20
PK
1
F70
20
PK
1
M20
20
YL/BK
LEFT VISOR/ VANITY LAMP
RIGHT VISOR/ VANITY LAMP
2
2
M20
20
YL/BK
M20
20
YL/BK
S347
(8W-12-27)

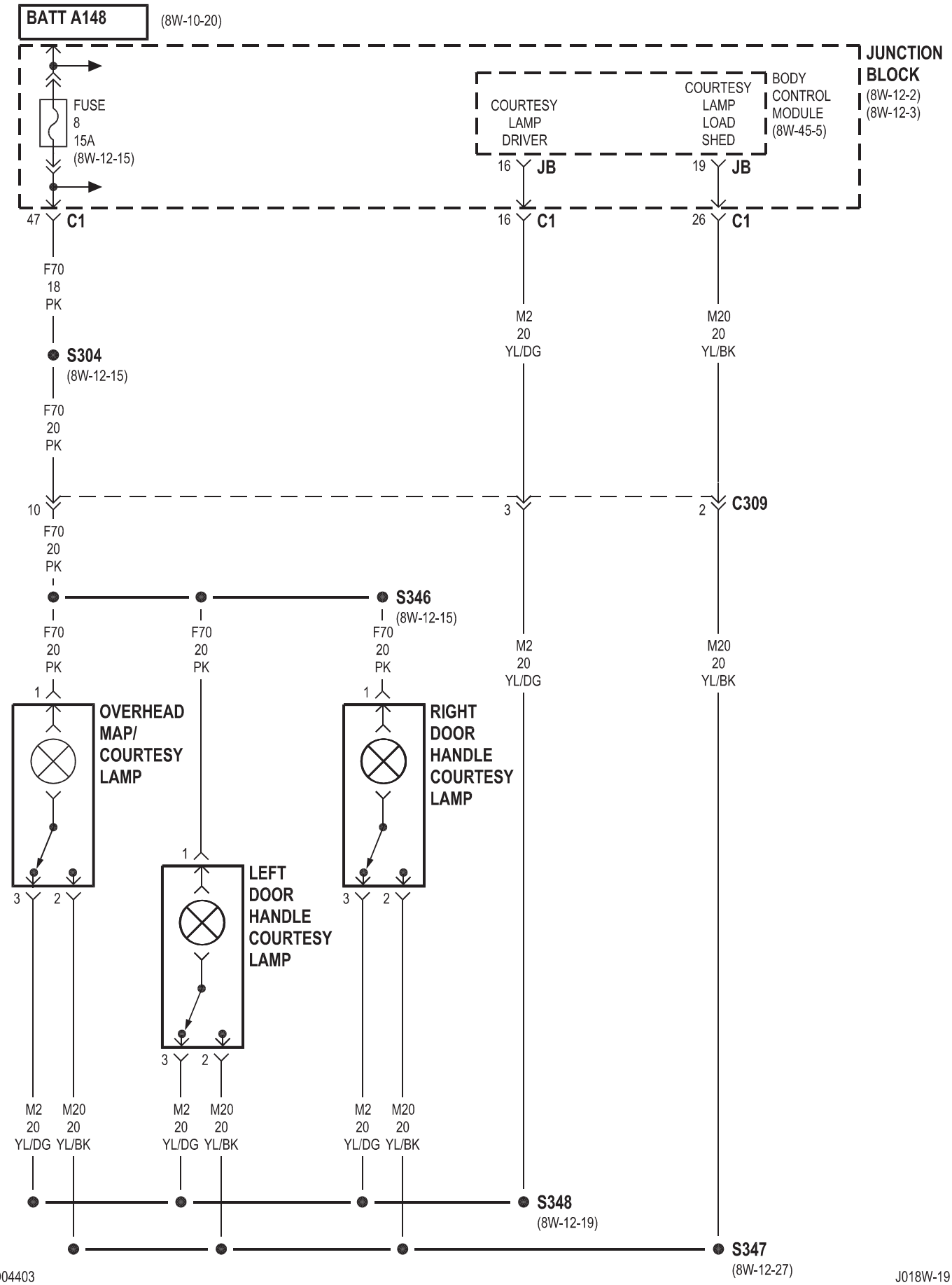

WJD04403

J018W-19

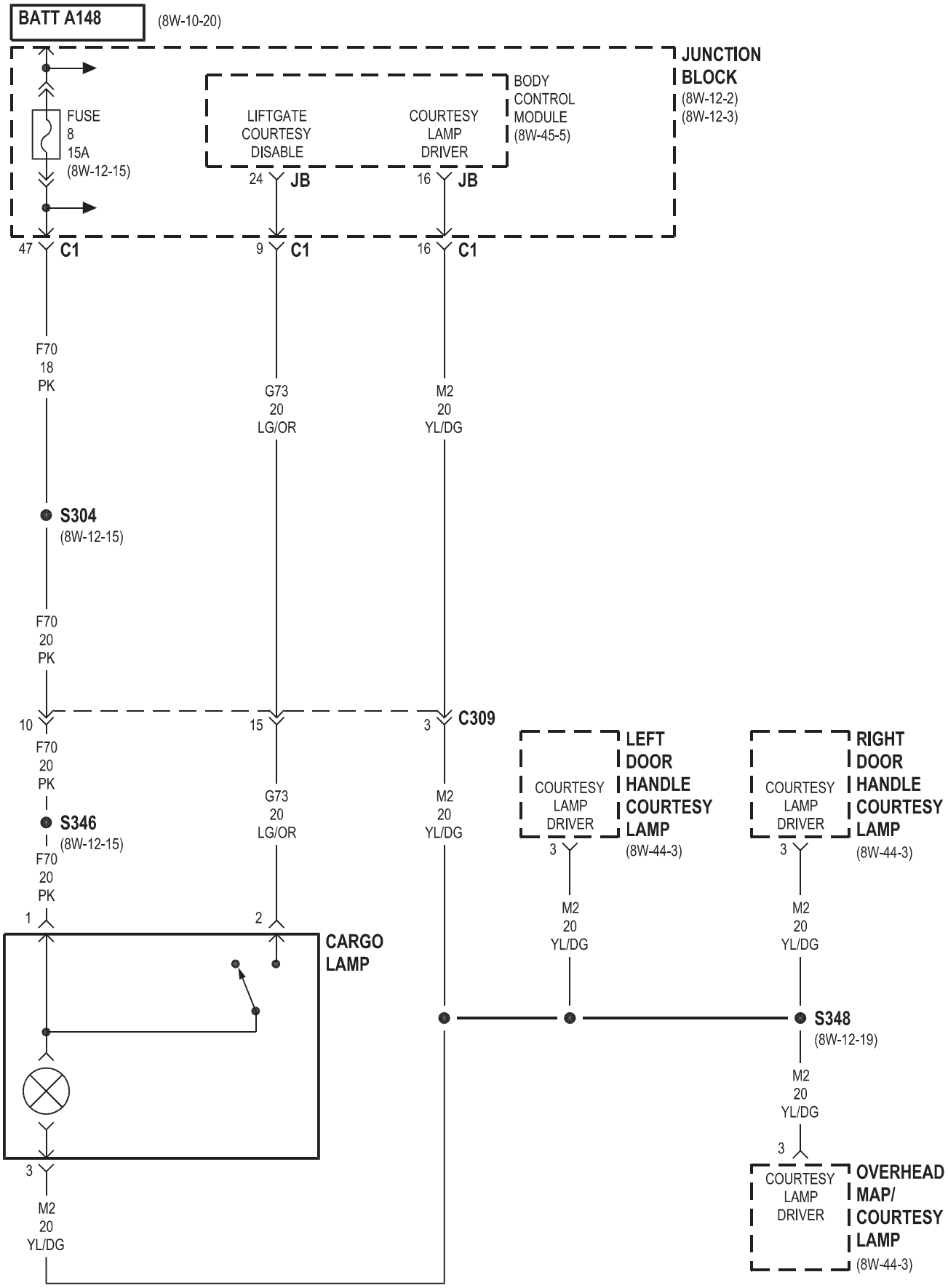
BATT A148
(8W-10-20)
JUNCTION BLOCK
(8W-12-2)
(8W-12-3)
FUSE 8 15A
(8W-12-15)
BODY CONTROL MODULE
(8W-45-5)
LIFTGATE COURTESY DISABLE
COURTESY LAMP DRIVER
24 JB
16 JB
47 C1
9 C1
16 C1
F70 18 PK
G73 20 LG/OR
M2 20 YL/DG
S304
(8W-12-15)
F70 20 PK
10
15
3 C309
F70 20 PK
S346
(8W-12-15)
F70 20 PK
G73 20 LG/OR
M2 20 YL/DG
COURTESY LAMP DRIVER
LEFT DOOR HANDLE COURTESY LAMP
(8W-44-3)
COURTESY LAMP DRIVER
RIGHT DOOR HANDLE COURTESY LAMP
(8W-44-3)
3
M2 20 YL/DG
1
2
CARGO LAMP
S348
(8W-12-19)
M2 20 YL/DG
3
COURTESY LAMP DRIVER
OVERHEAD MAP/ COURTESY LAMP
(8W-44-3)
3
M2 20 YL/DG

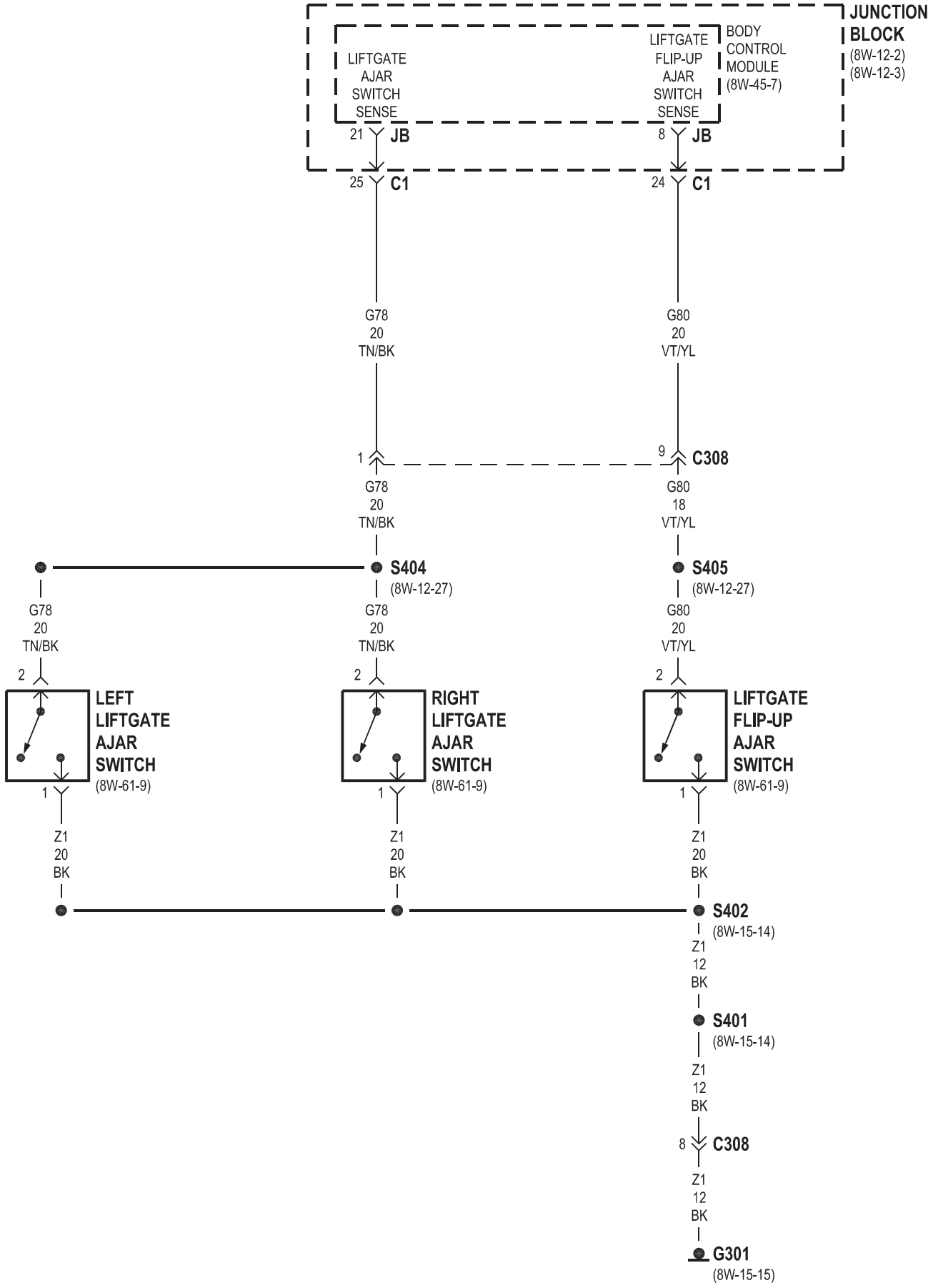
JUNCTION BLOCK
(8W-12-2)
(8W-12-3)
BODY CONTROL MODULE
(8W-45-7)
LIFTGATE AJAR SWITCH SENSE
LIFTGATE FLIP-UP AJAR SWITCH SENSE
21 JB
8 JB
25 C1
24 C1
G78 20 TN/BK
G80 20 VT/YL
1
9 C308
G78 20 TN/BK
G80 18 VT/YL
S404
(8W-12-27)
S405
(8W-12-27)
G78 20 TN/BK
G78 20 TN/BK
G80 20 VT/YL
2
2
2
LEFT LIFTGATE AJAR SWITCH
(8W-61-9)
RIGHT LIFTGATE AJAR SWITCH
(8W-61-9)
LIFTGATE FLIP-UP AJAR SWITCH
(8W-61-9)
1
1
1
Z1 20 BK
Z1 20 BK
Z1 20 BK
S402
(8W-15-14)
Z1 12 BK
S401
(8W-15-14)
Z1 12 BK
8 C308
Z1 12 BK
G301
(8W-15-15)

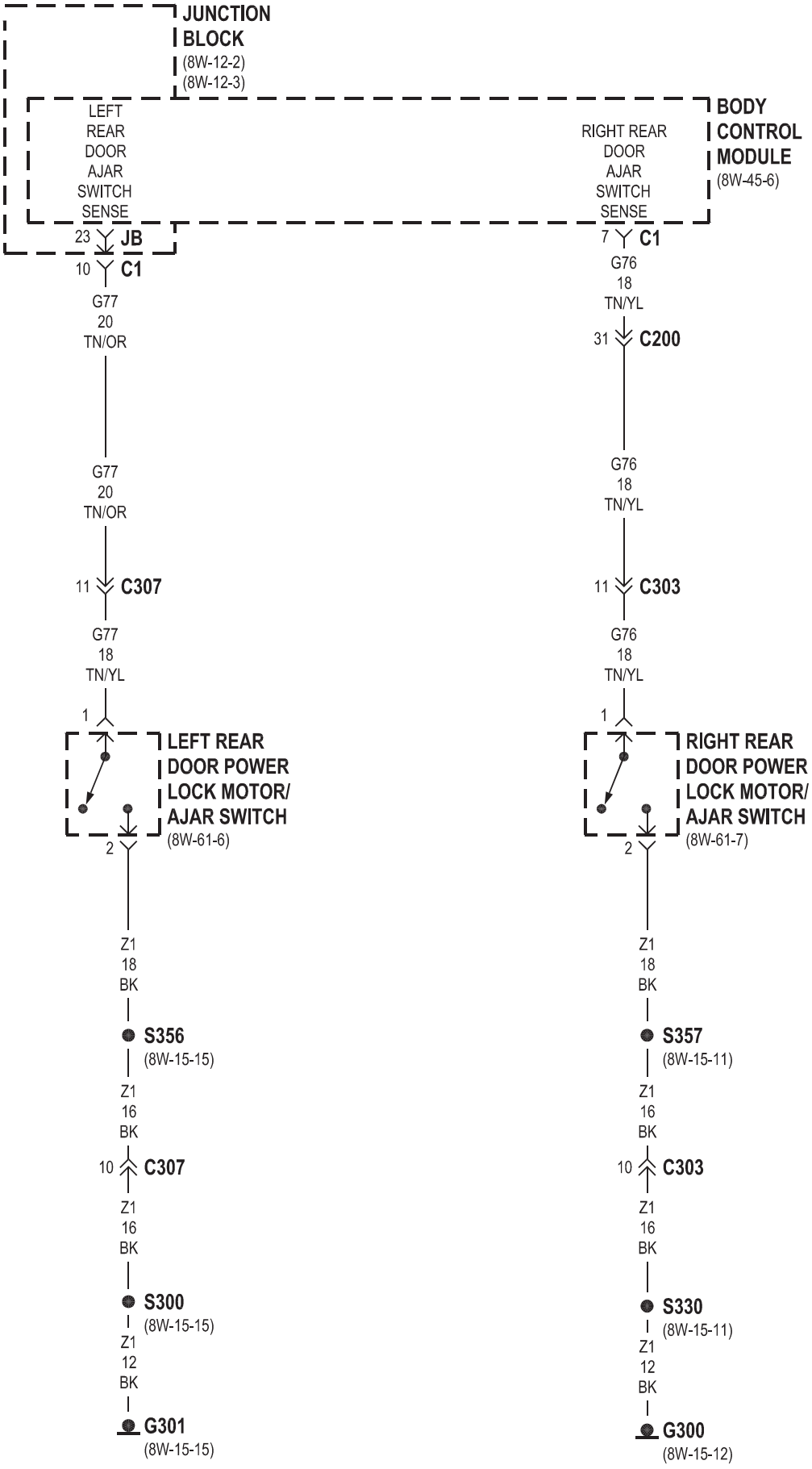
JUNCTION BLOCK
(8W-12-2)
(8W-12-3)
BODY CONTROL MODULE
(8W-45-6)
LEFT REAR DOOR AJAR SWITCH SENSE
RIGHT REAR DOOR AJAR SWITCH SENSE
23 JB
10 C1
7 C1
G77 20 TN/OR
G76 18 TN/YL
31 C200
G77 20 TN/OR
G76 18 TN/YL
11 C307
11 C303
G77 18 TN/YL
G76 18 TN/YL
1
2
LEFT REAR DOOR POWER LOCK MOTOR/ AJAR SWITCH
(8W-61-6)
RIGHT REAR DOOR POWER LOCK MOTOR/ AJAR SWITCH
(8W-61-7)
Z1 18 BK
S356
(8W-15-15)
S357
(8W-15-11)
Z1 16 BK
10 C307
10 C303
S300
(8W-15-15)
S330
(8W-15-11)
Z1 12 BK
G301
(8W-15-15)
G300
(8W-15-12)

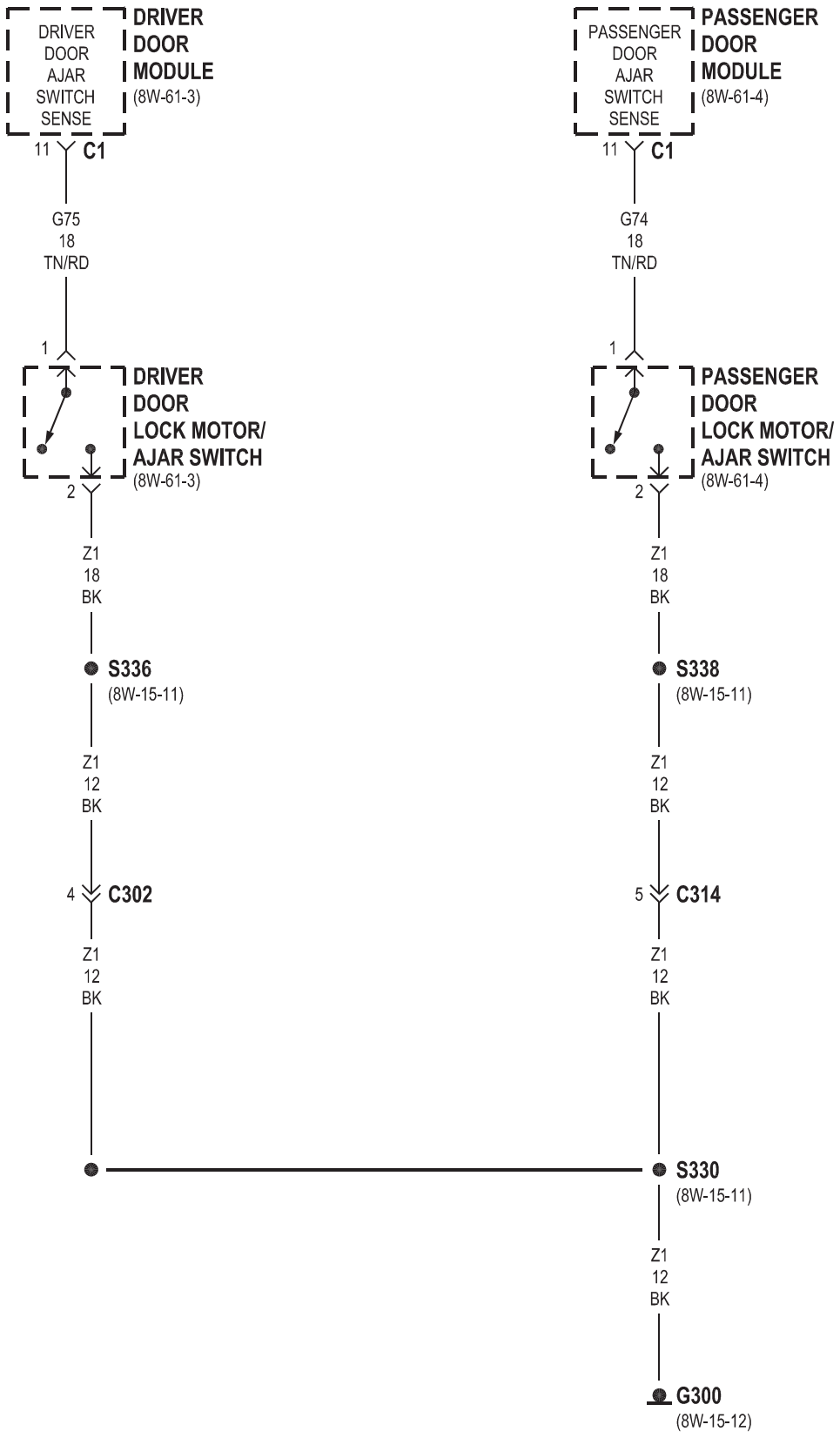
DRIVER DOOR AJAR SWITCH SENSE
DRIVER DOOR MODULE
(8W-61-3)
11
C1
G75
18
TN/RD
1
DRIVER DOOR LOCK MOTOR/ AJAR SWITCH
(8W-61-3)
2
Z1
18
BK
S336
(8W-15-11)
Z1
12
BK
4
C302
Z1
12
BK
PASSENGER DOOR AJAR SWITCH SENSE
PASSENGER DOOR MODULE
(8W-61-4)
11
C1
G74
18
TN/RD
1
PASSENGER DOOR LOCK MOTOR/ AJAR SWITCH
(8W-61-4)
2
Z1
18
BK
S338
(8W-15-11)
Z1
12
BK
5
C314
Z1
12
BK
S330
(8W-15-11)
Z1
12
BK
G300
(8W-15-12)

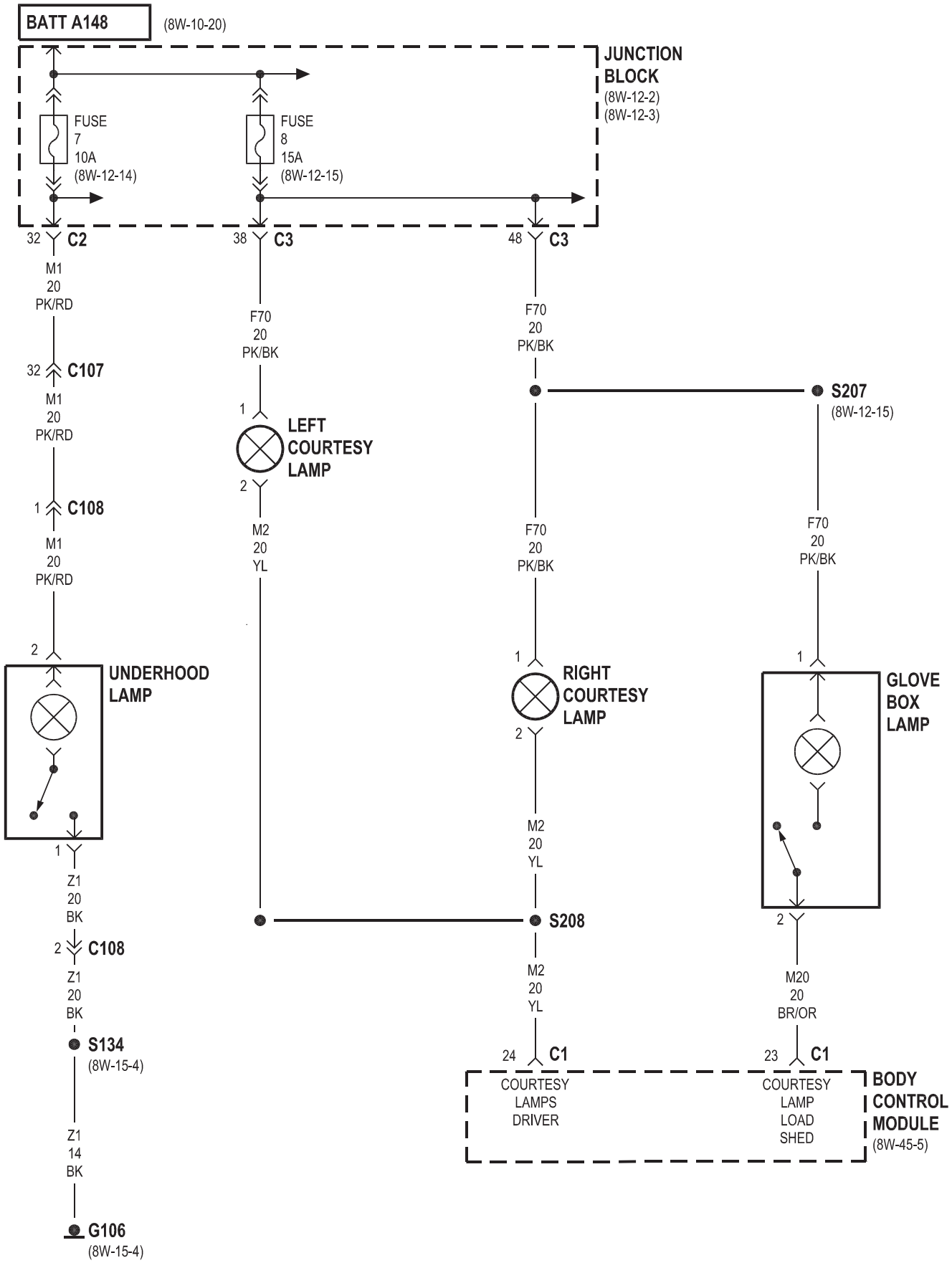
BATT A148
(8W-10-20)
JUNCTION BLOCK
(8W-12-2)
(8W-12-3)
FUSE 7 10A (8W-12-14)
FUSE 8 15A (8W-12-15)
32 C2
38 C3
48 C3
M1 20 PK/RD
F70 20 PK/BK
F70 20 PK/BK
32 C107
M1 20 PK/RD
1 C108
M1 20 PK/RD
S207
(8W-12-15)
LEFT COURTESY LAMP
M2 20 YL
F70 20 PK/BK
F70 20 PK/BK
UNDERHOOD LAMP
RIGHT COURTESY LAMP
GLOVE BOX LAMP
Z1 20 BK
2 C108
Z1 20 BK
S208
M2 20 YL
M2 20 YL
M20 20 BR/OR
S134
(8W-15-4)
24 C1
23 C1
COURTESY LAMPS DRIVER
COURTESY LAMP LOAD SHED
BODY CONTROL MODULE
(8W-45-5)
Z1 14 BK
G106
(8W-15-4)

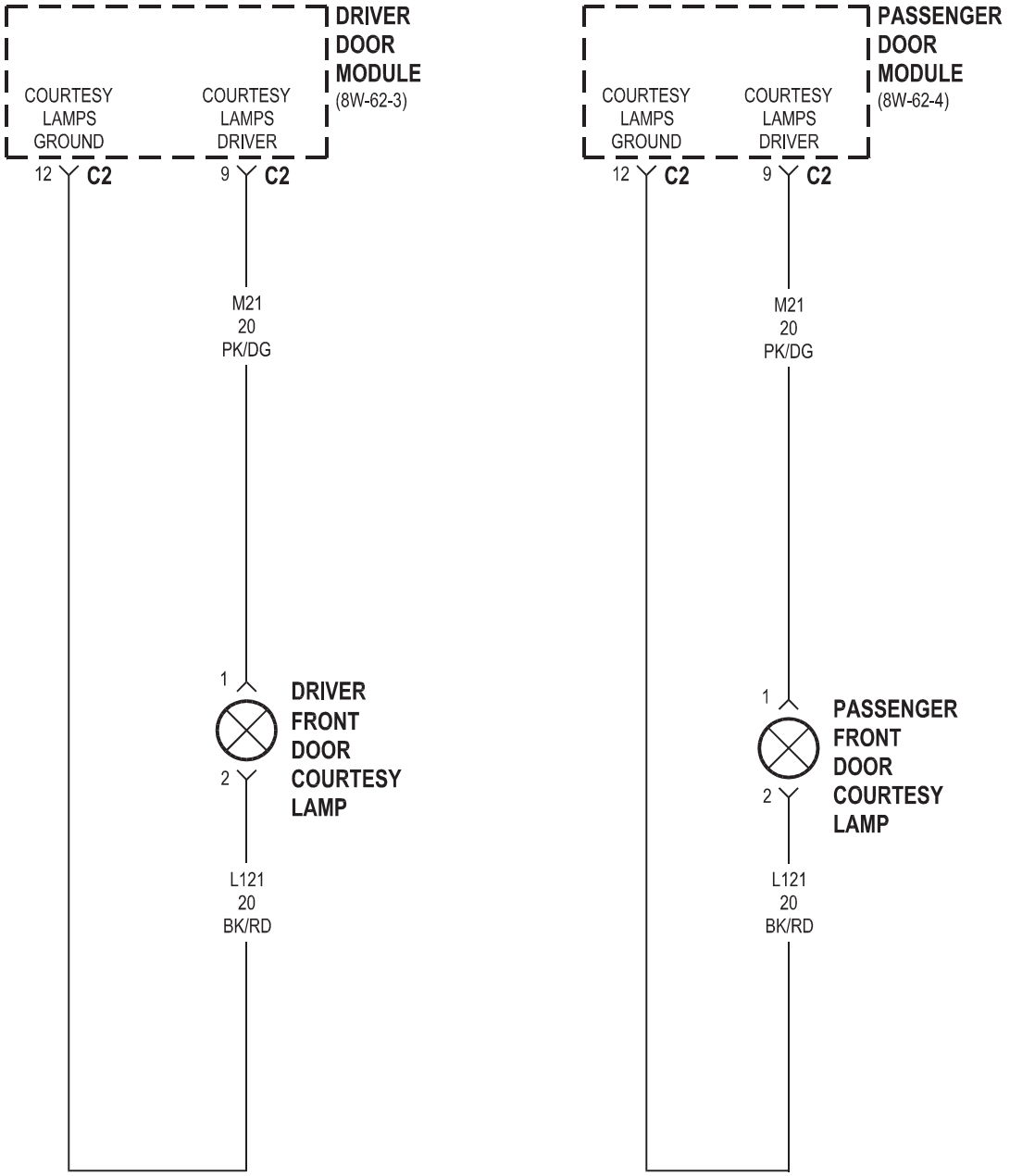
DRIVER DOOR MODULE
(8W-62-3)
COURTESY LAMPS GROUND
COURTESY LAMPS DRIVER
12
C2
9
C2
M21
20
PK/DG
1
2
DRIVER FRONT DOOR COURTESY LAMP
L121
20
BK/RD
PASSENGER DOOR MODULE
(8W-62-4)
COURTESY LAMPS GROUND
COURTESY LAMPS DRIVER
12
C2
9
C2
M21
20
PK/DG
1
2
PASSENGER FRONT DOOR COURTESY LAMP
L121
20
BK/RD

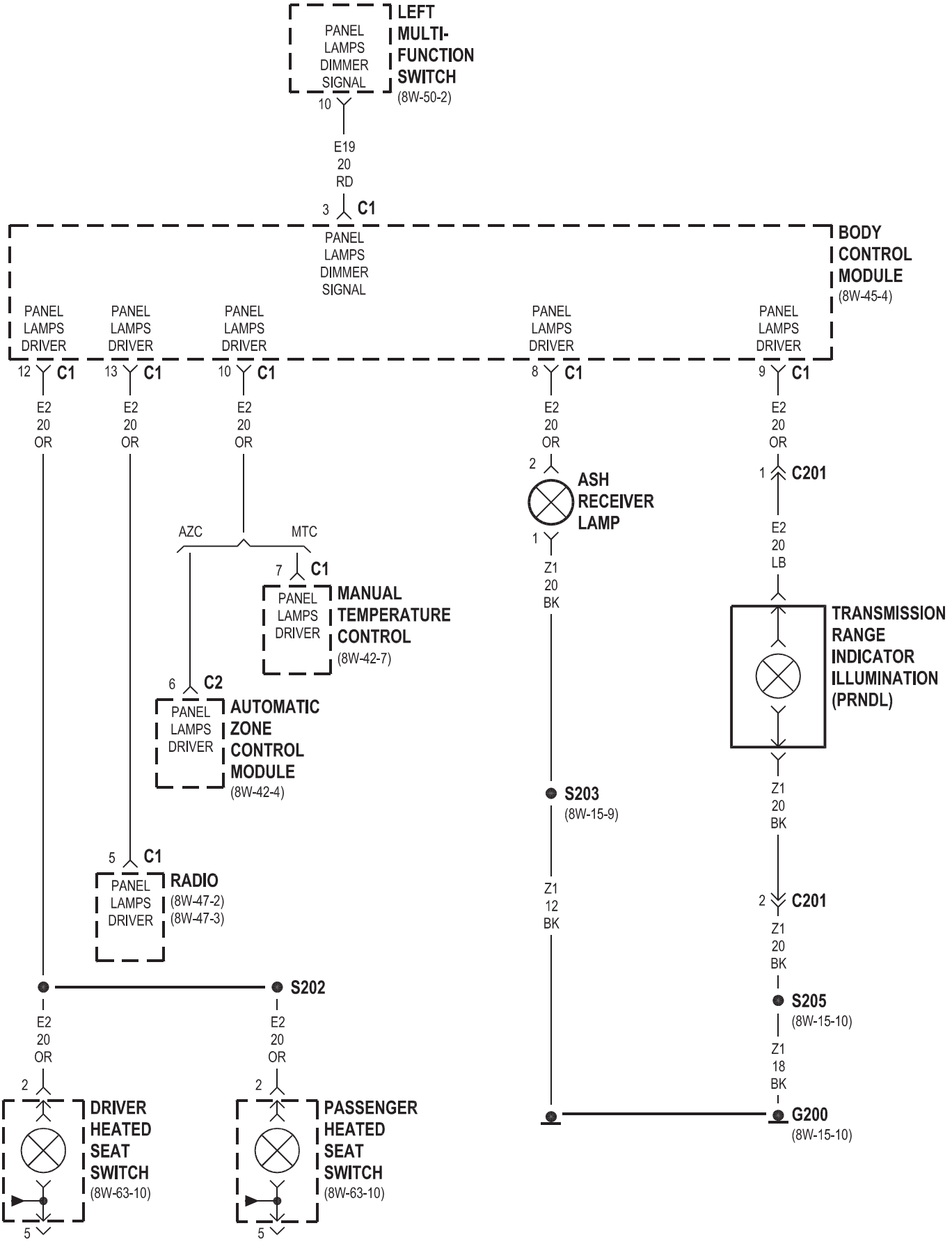
PANEL LAMPS DIMMER SIGNAL
LEFT MULTI-FUNCTION SWITCH
(8W-50-2)
10
E19
20
RD
3
C1
PANEL LAMPS DIMMER SIGNAL
BODY CONTROL MODULE
(8W-45-4)
PANEL LAMPS DRIVER
PANEL LAMPS DRIVER
PANEL LAMPS DRIVER
PANEL LAMPS DRIVER
PANEL LAMPS DRIVER
12 C1
13 C1
10 C1
8 C1
9 C1
E2
20
OR
E2
20
OR
E2
20
OR
E2
20
OR
E2
20
OR
2
ASH RECEIVER LAMP
1
Z1
20
BK
1
C201
E2
20
LB
AZC
MTC
7
C1
PANEL LAMPS DRIVER
MANUAL TEMPERATURE CONTROL
(8W-42-7)
TRANSMISSION RANGE INDICATOR ILLUMINATION (PRNDL)
6
C2
PANEL LAMPS DRIVER
AUTOMATIC ZONE CONTROL MODULE
(8W-42-4)
S203
(8W-15-9)
Z1
20
BK
5
C1
PANEL LAMPS DRIVER
RADIO
(8W-47-2)
(8W-47-3)
Z1
12
BK
2
C201
Z1
20
BK
S202
S205
(8W-15-10)
E2
20
OR
E2
20
OR
Z1
18
BK
2
2
G200
(8W-15-10)
DRIVER HEATED SEAT SWITCH
(8W-63-10)
PASSENGER HEATED SEAT SWITCH
(8W-63-10)
5
5
J018W-19
WJD04410

8W-45 BODY CONTROL MODULE

Component	Page
Ambient Temperature Sensor	8W-45-6
Ash Receiver Lamp	8W-45-4
Automatic Headlamp Light Sensor/Vtss Led	8W-45-3, 6
Automatic Zone Control Module	8W-45-4, 9
Body Control Module	8W-45-2, 3, 4, 5, 6, 7, 8, 9
Cargo Lamp	8W-45-5
Clockspring	8W-45-8
Coolant Level Sensor	8W-45-5
Data Link Connector	8W-45-5
Diagnostic Junction Port	8W-45-5
Driver Heated Seat Switch	8W-45-4, 9
Fog Lamp Relay	8W-45-3
Front Washer Pump	8W-45-7
Front Wiper Motor	8W-45-7
Fuse 6 (JB)	8W-45-4
Fuse 7 (JB)	8W-45-2
Fuse 22 (JB)	8W-45-2
Fuse 25 (JB)	8W-45-8
Fuse 28 (JB)	8W-45-2
G108	8W-45-5
G200	8W-45-2, 5
Glove Box Lamp	8W-45-5
High Beam Relay	8W-45-3
Horn Relay	8W-45-6
Ignition Switch	8W-45-5
Junction Block	8W-45-2, 3, 4, 5, 6, 7, 8
Left Courtesy Lamp	8W-45-5
Left Liftgate Ajar Switch	8W-45-7
Left Multi-Function Switch	8W-45-3, 4
Left Rear Door Power Lock Motor/Ajar Switch	8W-45-6
Left Remote Radio Switch	8W-45-8
Liftgate Flip-Up Ajar Switch	8W-45-7
Low Beam Relay	8W-45-3
Low Beam/Daytime Running Lamp Relay	8W-45-3
Manual Temperature Control	8W-45-4, 9
Overhead Map/Courtesy Lamp	8W-45-5
Park Lamp Relay	8W-45-3, 4
Passenger Heated Seat Switch	8W-45-4, 9
Radio	8W-45-4
Rear Window Defogger Relay	8W-45-8
Rear Wiper Motor	8W-45-7
Right Courtesy Lamp	8W-45-5
Right Liftgate Ajar Switch	8W-45-7
Right Multi-Function Switch	8W-45-7
Right Rear Door Power Lock Motor/Ajar Switch	8W-45-6
Right Remote Radio Switch	8W-45-8
Seat Belt Switch	8W-45-6
Sunroof Delay Relay	8W-45-8
Transmission Range Indicator Illumination	8W-45-4
Washer Fluid Level Switch	8W-45-7
Wiper On/Off Relay	8W-45-7

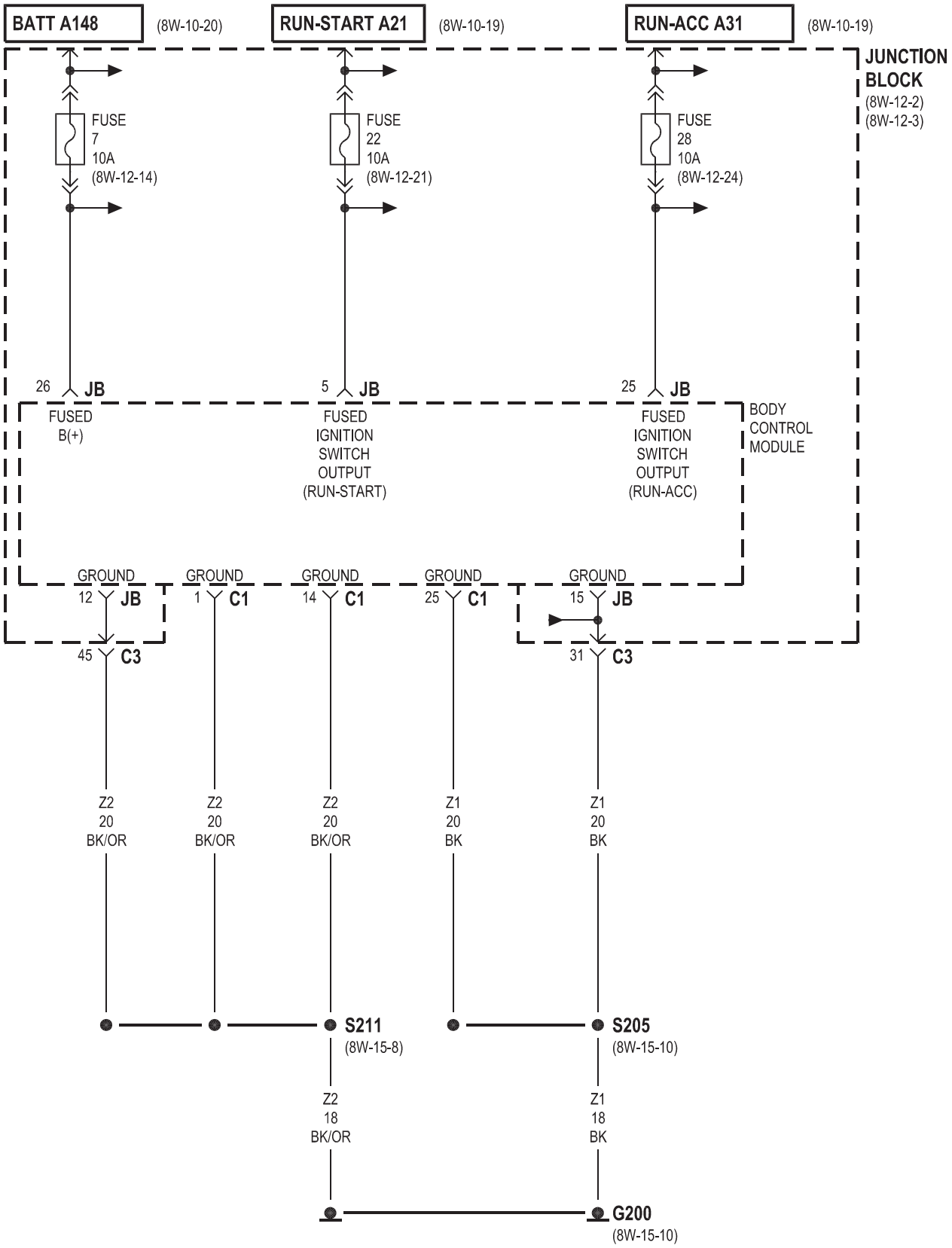
BATT A148
(8W-10-20)
RUN-START A21
(8W-10-19)
RUN-ACC A31
(8W-10-19)
JUNCTION BLOCK
(8W-12-2)
(8W-12-3)
FUSE 7 10A (8W-12-14)
FUSE 22 10A (8W-12-21)
FUSE 28 10A (8W-12-24)
26 JB
FUSED B(+)
5 JB
FUSED IGNITION SWITCH OUTPUT (RUN-START)
25 JB
FUSED IGNITION SWITCH OUTPUT (RUN-ACC)
BODY CONTROL MODULE
GROUND
12 JB
45 C3
GROUND
1 C1
GROUND
14 C1
GROUND
25 C1
GROUND
15 JB
31 C3
Z2 20 BK/OR
Z2 20 BK/OR
Z2 20 BK/OR
Z1 20 BK
Z1 20 BK
S211
(8W-15-8)
S205
(8W-15-10)
Z2 18 BK/OR
Z1 18 BK
G200
(8W-15-10)

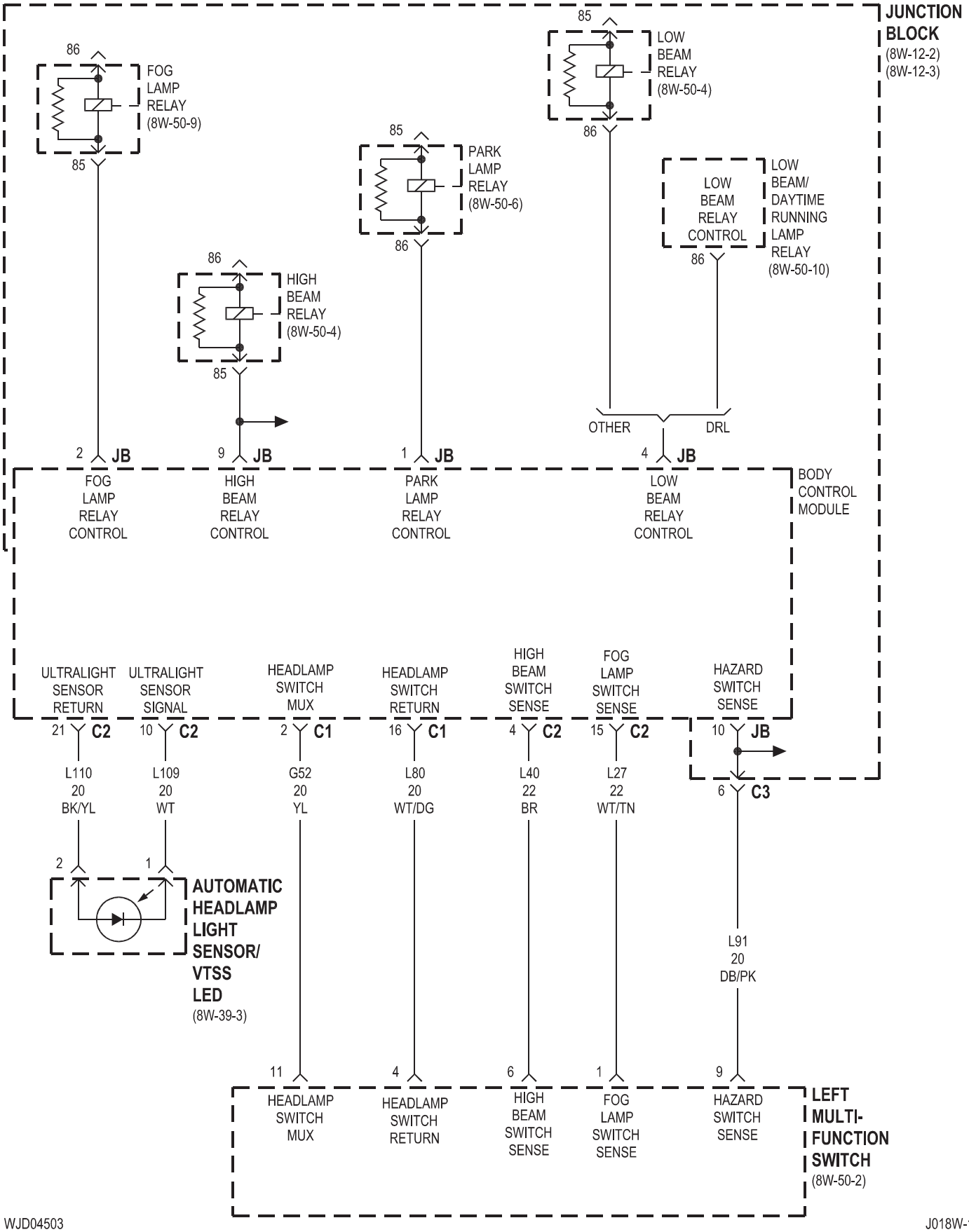
JUNCTION BLOCK
(8W-12-2)
(8W-12-3)
86
FOG LAMP RELAY
(8W-50-9)
85
85
LOW BEAM RELAY
(8W-50-4)
86
85
PARK LAMP RELAY
(8W-50-6)
86
LOW BEAM RELAY CONTROL
LOW BEAM/ DAYTIME RUNNING LAMP RELAY
(8W-50-10)
86
86
HIGH BEAM RELAY
(8W-50-4)
85
OTHER
DRL
2 JB
9 JB
1 JB
4 JB
FOG LAMP RELAY CONTROL
HIGH BEAM RELAY CONTROL
PARK LAMP RELAY CONTROL
LOW BEAM RELAY CONTROL
BODY CONTROL MODULE
ULTRALIGHT SENSOR RETURN
ULTRALIGHT SENSOR SIGNAL
HEADLAMP SWITCH MUX
HEADLAMP SWITCH RETURN
HIGH BEAM SWITCH SENSE
FOG LAMP SWITCH SENSE
HAZARD SWITCH SENSE
21 C2
10 C2
2 C1
16 C1
4 C2
15 C2
10 JB
L110
20
BK/YL
L109
20
WT
G52
20
YL
L80
20
WT/DG
L40
22
BR
L27
22
WT/TN
6 C3
2
1
AUTOMATIC HEADLAMP LIGHT SENSOR/ VTSS LED
(8W-39-3)
L91
20
DB/PK
11
4
6
1
9
HEADLAMP SWITCH MUX
HEADLAMP SWITCH RETURN
HIGH BEAM SWITCH SENSE
FOG LAMP SWITCH SENSE
HAZARD SWITCH SENSE
LEFT MULTI-FUNCTION SWITCH
(8W-50-2)

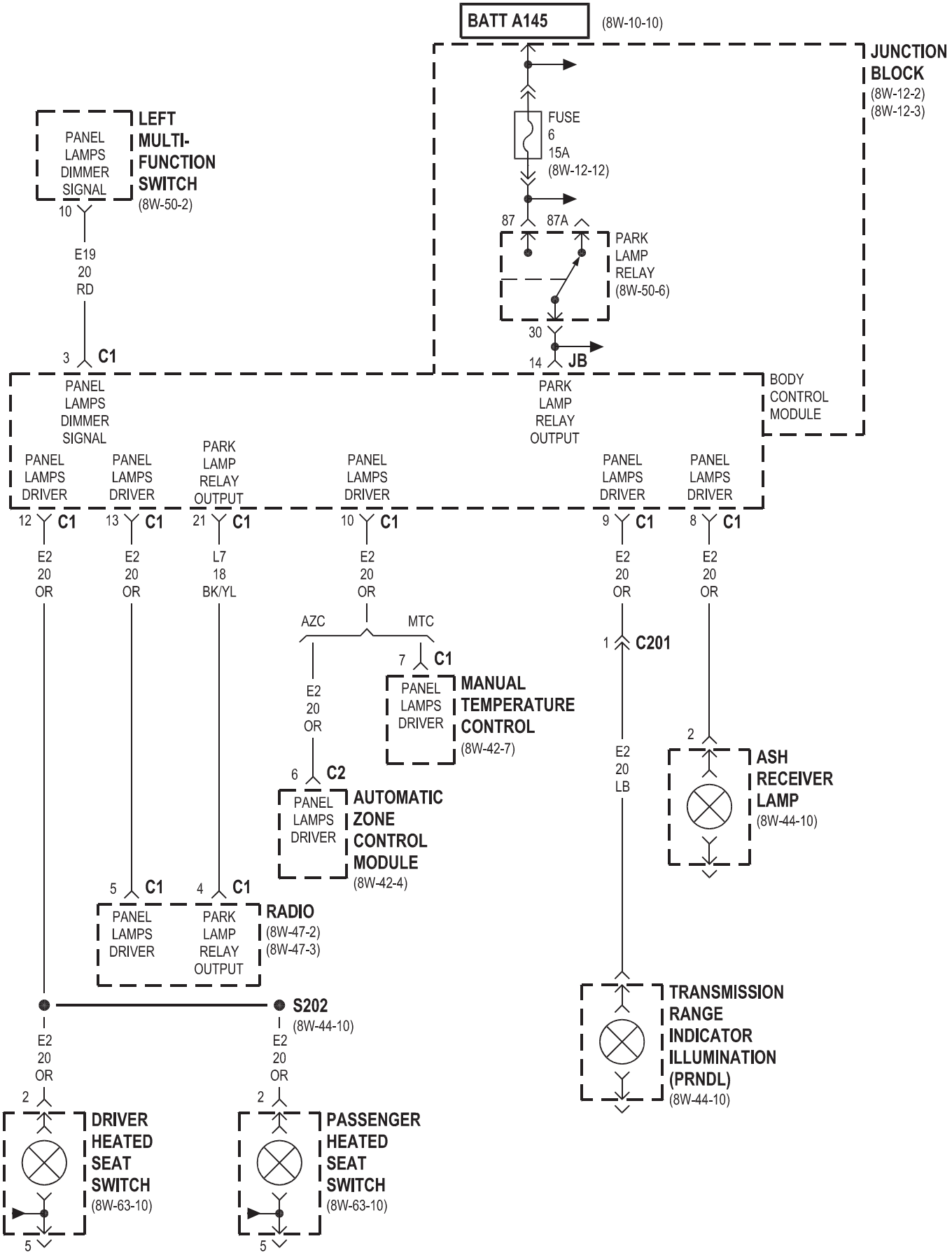
BATT A145
(8W-10-10)
JUNCTION BLOCK
(8W-12-2)
(8W-12-3)
FUSE
6
15A
(8W-12-12)
87
87A
PARK LAMP RELAY
(8W-50-6)
30
14
JB
PARK LAMP RELAY OUTPUT
LEFT MULTI-FUNCTION SWITCH
(8W-50-2)
PANEL LAMPS DIMMER SIGNAL
10
E19
20
RD
3
C1
PANEL LAMPS DIMMER SIGNAL
BODY CONTROL MODULE
PANEL LAMPS DRIVER
PANEL LAMPS DRIVER
PARK LAMP RELAY OUTPUT
PANEL LAMPS DRIVER
PANEL LAMPS DRIVER
PANEL LAMPS DRIVER
12 C1
13 C1
21 C1
10 C1
9 C1
8 C1
E2
20
OR
E2
20
OR
L7
18
BK/YL
E2
20
OR
E2
20
OR
E2
20
OR
AZC
MTC
7 C1
PANEL LAMPS DRIVER
MANUAL TEMPERATURE CONTROL
(8W-42-7)
E2
20
OR
6 C2
PANEL LAMPS DRIVER
AUTOMATIC ZONE CONTROL MODULE
(8W-42-4)
1 C201
E2
20
LB
2
ASH RECEIVER LAMP
(8W-44-10)
5 C1
4 C1
PANEL LAMPS DRIVER
PARK LAMP RELAY OUTPUT
RADIO
(8W-47-2)
(8W-47-3)
S202
(8W-44-10)
E2
20
OR
E2
20
OR
2
2
DRIVER HEATED SEAT SWITCH
(8W-63-10)
5
PASSENGER HEATED SEAT SWITCH
(8W-63-10)
5
TRANSMISSION RANGE INDICATOR ILLUMINATION (PRNDL)
(8W-44-10)

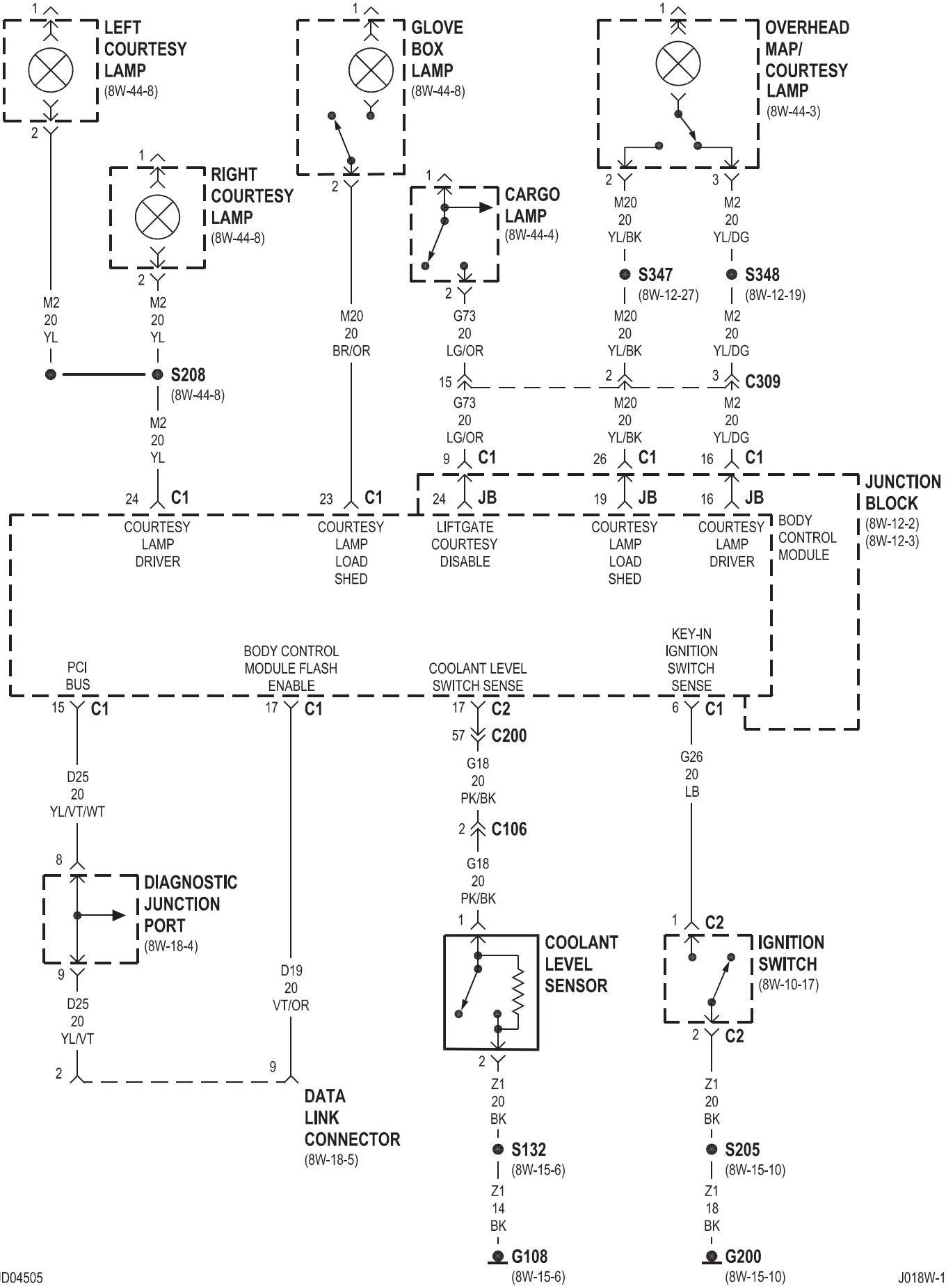
LEFT COURTESY LAMP (8W-44-8)
GLOVE BOX LAMP (8W-44-8)
OVERHEAD MAP/ COURTESY LAMP (8W-44-3)
RIGHT COURTESY LAMP (8W-44-8)
CARGO LAMP (8W-44-4)
M2 20 YL
M2 20 YL
M20 20 BR/OR
G73 20 LG/OR
M20 20 YL/BK
M2 20 YL/DG
S347 (8W-12-27)
S348 (8W-12-19)
S208 (8W-44-8)
C309
C1
JB
JUNCTION BLOCK (8W-12-2) (8W-12-3)
COURTESY LAMP DRIVER
COURTESY LAMP LOAD SHED
LIFTGATE COURTESY DISABLE
BODY CONTROL MODULE
PCI BUS
BODY CONTROL MODULE FLASH ENABLE
COOLANT LEVEL SWITCH SENSE
KEY-IN IGNITION SWITCH SENSE
C2
C200
C106
D25 20 YL/VT/WT
G18 20 PK/BK
G26 20 LB
DIAGNOSTIC JUNCTION PORT (8W-18-4)
D25 20 YL/VT
D19 20 VT/OR
DATA LINK CONNECTOR (8W-18-5)
COOLANT LEVEL SENSOR
IGNITION SWITCH (8W-10-17)
Z1 20 BK
S132 (8W-15-6)
S205 (8W-15-10)
Z1 14 BK
Z1 18 BK
G108 (8W-15-6)
G200 (8W-15-10)

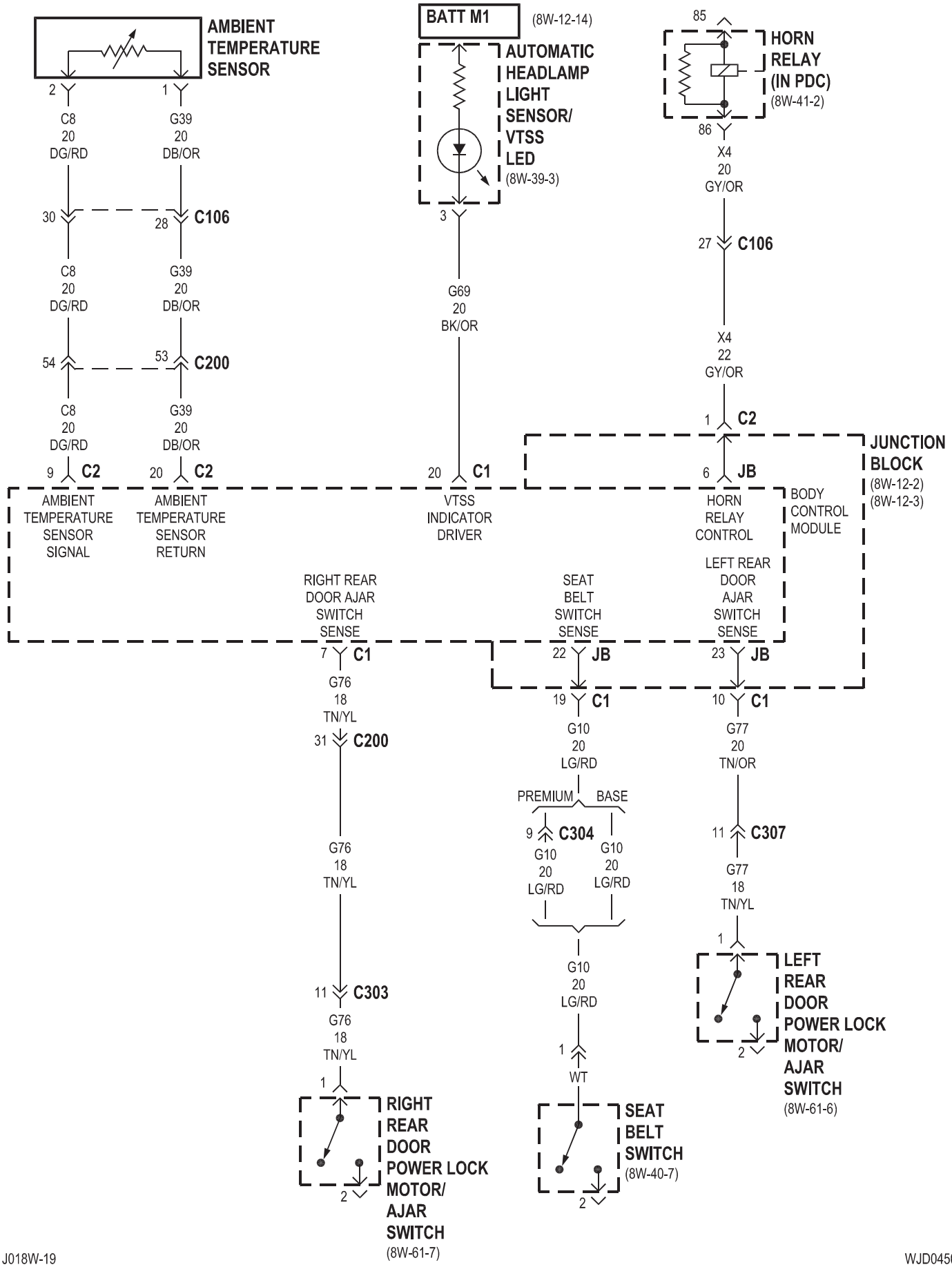
AMBIENT TEMPERATURE SENSOR
2
1
C8 20 DG/RD
G39 20 DB/OR
30
28
C106
C8 20 DG/RD
G39 20 DB/OR
54
53
C200
C8 20 DG/RD
G39 20 DB/OR
9
C2
20
C2
AMBIENT TEMPERATURE SENSOR SIGNAL
AMBIENT TEMPERATURE SENSOR RETURN
BATT M1
(8W-12-14)
AUTOMATIC HEADLAMP LIGHT SENSOR/ VTSS LED
(8W-39-3)
3
G69 20 BK/OR
20
C1
VTSS INDICATOR DRIVER
85
HORN RELAY (IN PDC)
(8W-41-2)
86
X4 20 GY/OR
27
C106
X4 22 GY/OR
1
C2
6
JB
HORN RELAY CONTROL
JUNCTION BLOCK
(8W-12-2)
(8W-12-3)
BODY CONTROL MODULE
RIGHT REAR DOOR AJAR SWITCH SENSE
SEAT BELT SWITCH SENSE
LEFT REAR DOOR AJAR SWITCH SENSE
7
C1
22
JB
23
JB
G76 18 TN/YL
19
C1
10
C1
31
C200
G10 20 LG/RD
G77 20 TN/OR
PREMIUM
BASE
9
C304
G10 20 LG/RD
G10 20 LG/RD
11
C307
G76 18 TN/YL
G77 18 TN/YL
1
LEFT REAR DOOR POWER LOCK MOTOR/ AJAR SWITCH
(8W-61-6)
2
11
C303
G10 20 LG/RD
G76 18 TN/YL
1
WT
1
RIGHT REAR DOOR POWER LOCK MOTOR/ AJAR SWITCH
(8W-61-7)
2
SEAT BELT SWITCH
(8W-40-7)
2

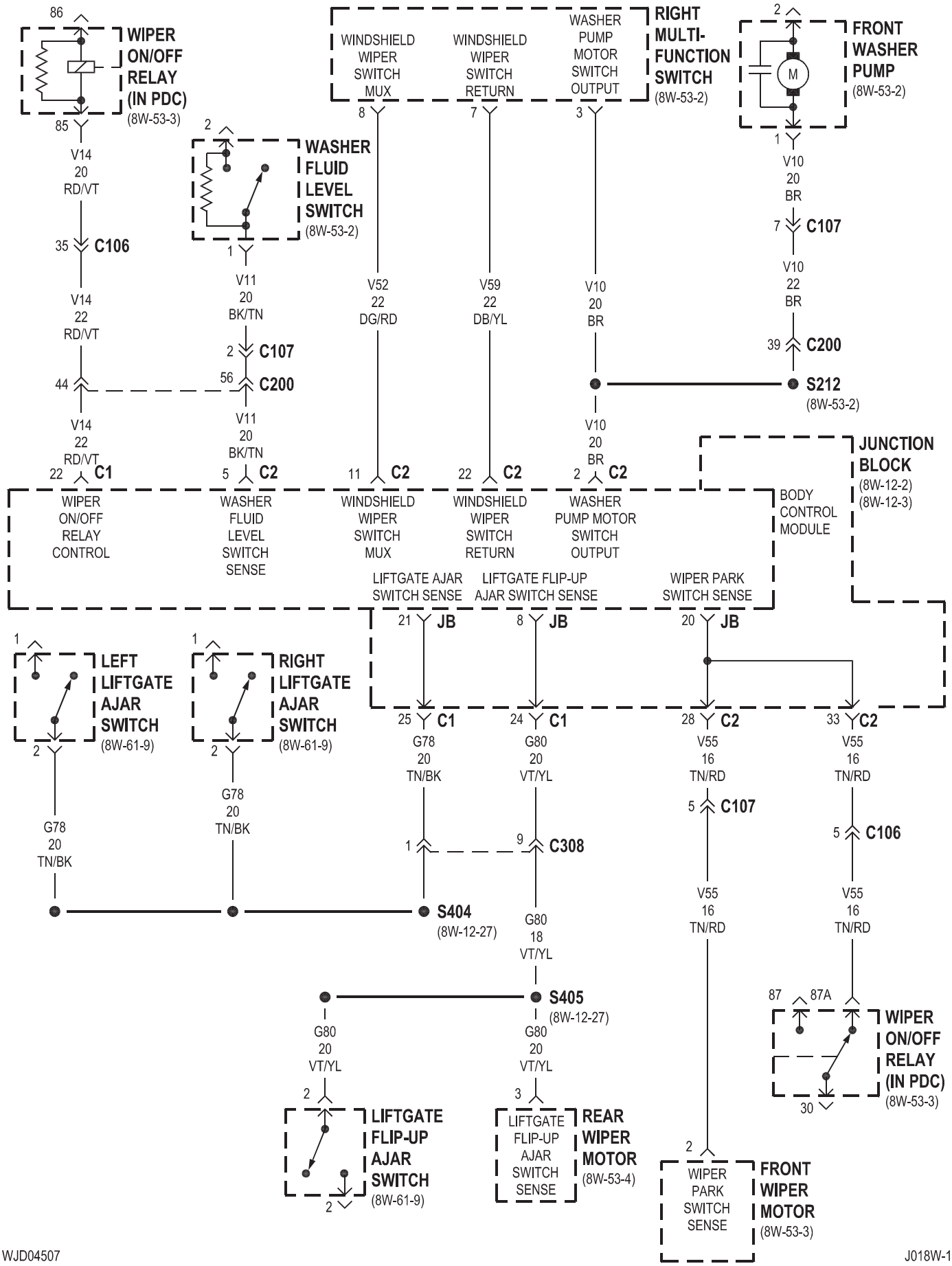
WIPER ON/OFF RELAY (IN PDC) (8W-53-3)
86
85
V14 20 RD/VT
35 C106
V14 22 RD/VT
44
WASHER FLUID LEVEL SWITCH (8W-53-2)
2
1
V11 20 BK/TN
2 C107
56 C200
V11 20 BK/TN
RIGHT MULTI-FUNCTION SWITCH (8W-53-2)
WINDSHIELD WIPER SWITCH MUX
WINDSHIELD WIPER SWITCH RETURN
WASHER PUMP MOTOR SWITCH OUTPUT
8
7
3
V52 22 DG/RD
V59 22 DB/YL
V10 20 BR
V10 20 BR
FRONT WASHER PUMP (8W-53-2)
M
1
V10 20 BR
7 C107
V10 22 BR
39 C200
S212 (8W-53-2)
V10 20 BR
JUNCTION BLOCK (8W-12-2) (8W-12-3)
BODY CONTROL MODULE
22 C1
WIPER ON/OFF RELAY CONTROL
5 C2
WASHER FLUID LEVEL SWITCH SENSE
11 C2
WINDSHIELD WIPER SWITCH MUX
22 C2
WINDSHIELD WIPER SWITCH RETURN
2 C2
WASHER PUMP MOTOR SWITCH OUTPUT
LIFTGATE AJAR SWITCH SENSE
LIFTGATE FLIP-UP AJAR SWITCH SENSE
WIPER PARK SWITCH SENSE
21 JB
8 JB
20 JB
LEFT LIFTGATE AJAR SWITCH (8W-61-9)
RIGHT LIFTGATE AJAR SWITCH (8W-61-9)
G78 20 TN/BK
G78 20 TN/BK
25 C1
G78 20 TN/BK
24 C1
G80 20 VT/YL
28 C2
V55 16 TN/RD
33 C2
V55 16 TN/RD
5 C107
5 C106
1
9 C308
S404 (8W-12-27)
G80 18 VT/YL
V55 16 TN/RD
V55 16 TN/RD
S405 (8W-12-27)
G80 20 VT/YL
G80 20 VT/YL
87
87A
WIPER ON/OFF RELAY (IN PDC) (8W-53-3)
30
LIFTGATE FLIP-UP AJAR SWITCH (8W-61-9)
LIFTGATE FLIP-UP AJAR SWITCH SENSE
REAR WIPER MOTOR (8W-53-4)
WIPER PARK SWITCH SENSE
FRONT WIPER MOTOR (8W-53-3)

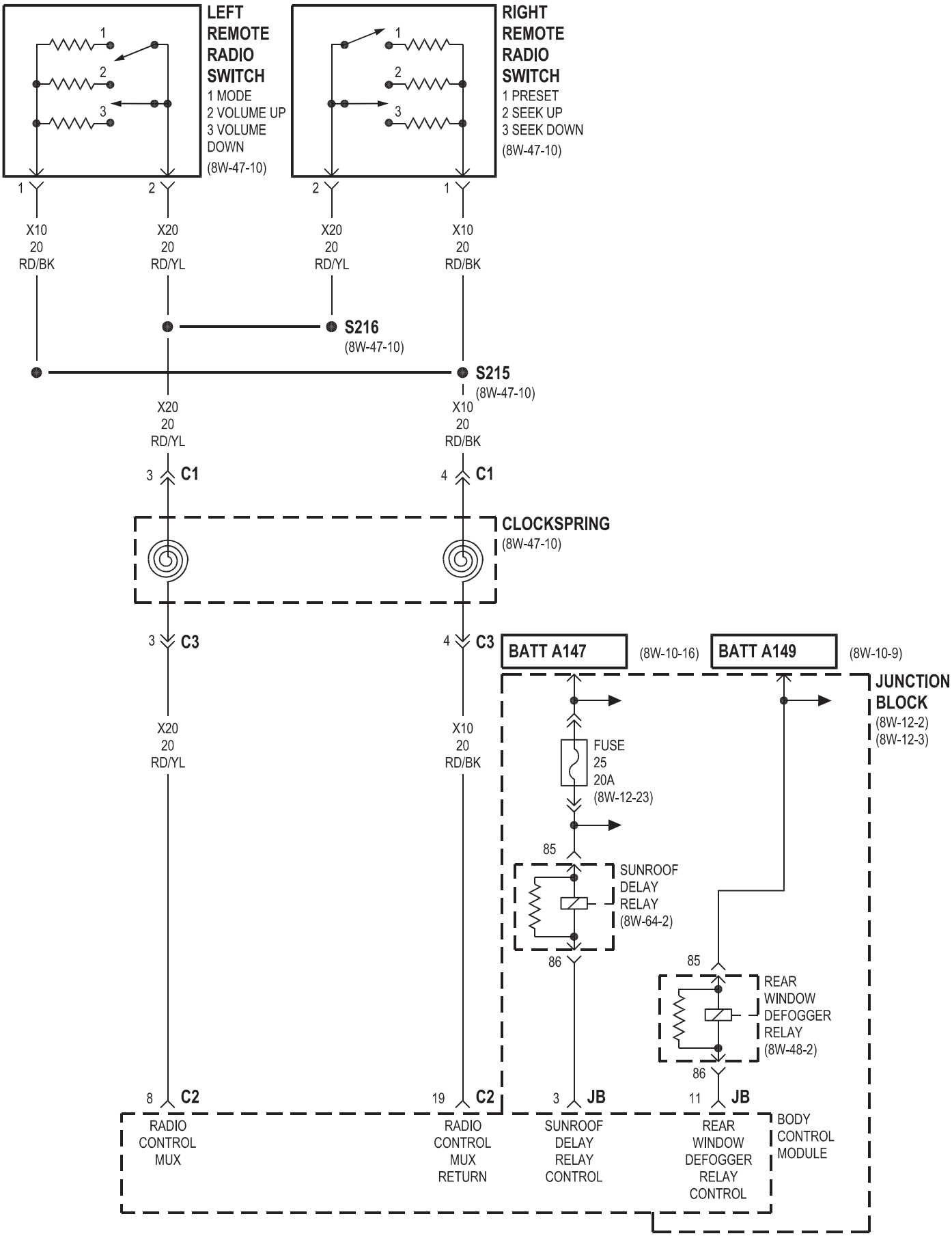
LEFT REMOTE RADIO SWITCH
1 MODE
2 VOLUME UP
3 VOLUME DOWN
(8W-47-10)
RIGHT REMOTE RADIO SWITCH
1 PRESET
2 SEEK UP
3 SEEK DOWN
(8W-47-10)
1
2
3
X10 20 RD/BK
X20 20 RD/YL
X20 20 RD/YL
X10 20 RD/BK
S216
(8W-47-10)
S215
(8W-47-10)
X20 20 RD/YL
X10 20 RD/BK
C1
C1
CLOCKSPRING
(8W-47-10)
C3
C3
BATT A147
(8W-10-16)
BATT A149
(8W-10-9)
JUNCTION BLOCK
(8W-12-2)
(8W-12-3)
X20 20 RD/YL
X10 20 RD/BK
FUSE 25 20A
(8W-12-23)
85
SUNROOF DELAY RELAY
(8W-64-2)
86
85
REAR WINDOW DEFOGGER RELAY
(8W-48-2)
86
C2
C2
JB
JB
RADIO CONTROL MUX
RADIO CONTROL MUX RETURN
SUNROOF DELAY RELAY CONTROL
REAR WINDOW DEFOGGER RELAY CONTROL
BODY CONTROL MODULE

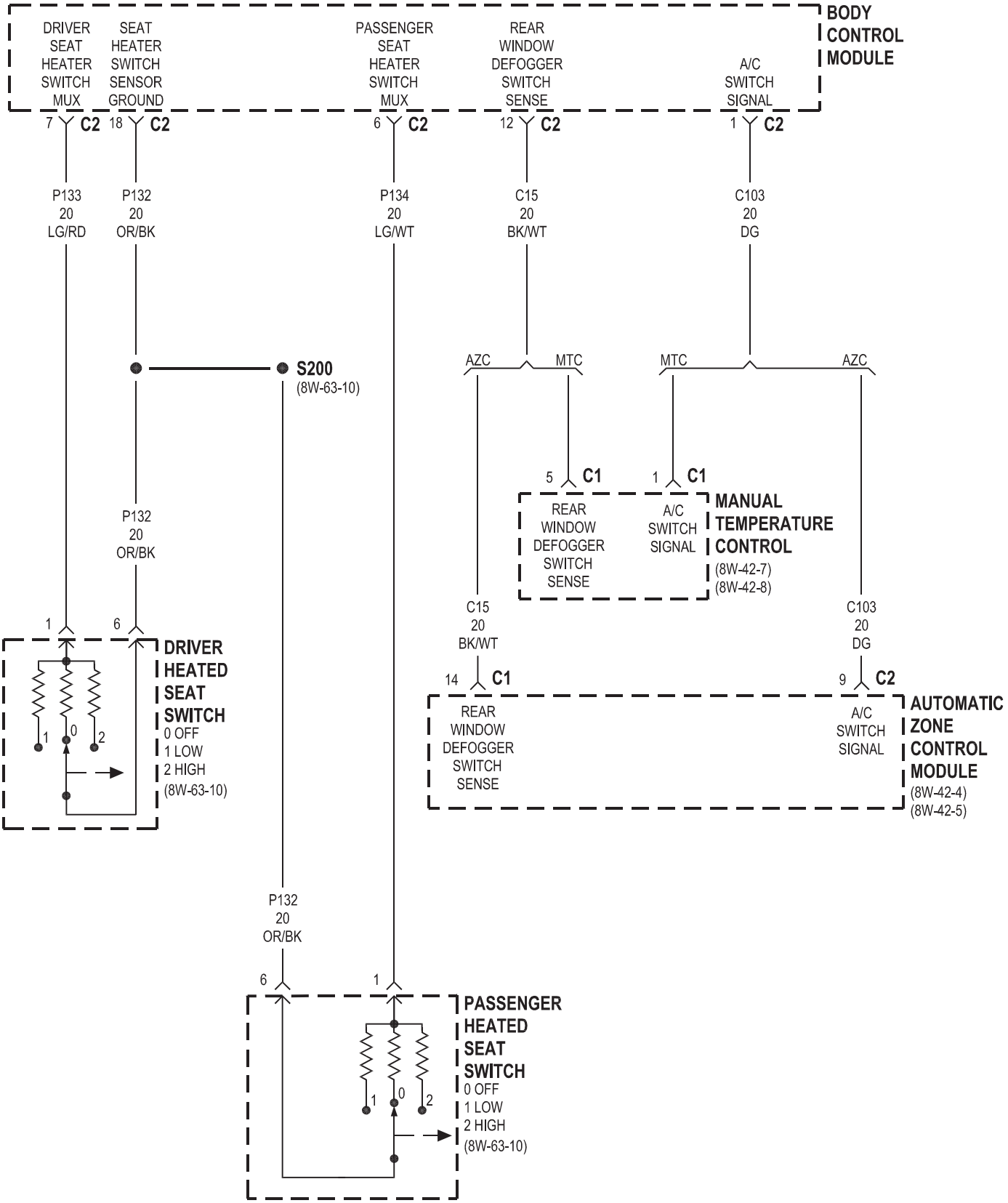
BODY CONTROL MODULE
DRIVER SEAT HEATER SWITCH MUX
SEAT HEATER SWITCH SENSOR GROUND
PASSENGER SEAT HEATER SWITCH MUX
REAR WINDOW DEFOGGER SWITCH SENSE
A/C SWITCH SIGNAL
7 C2
18 C2
6 C2
12 C2
1 C2
P133 20 LG/RD
P132 20 OR/BK
P134 20 LG/WT
C15 20 BK/WT
C103 20 DG
S200
(8W-63-10)
AZC
MTC
MTC
AZC
5 C1
1 C1
REAR WINDOW DEFOGGER SWITCH SENSE
A/C SWITCH SIGNAL
MANUAL TEMPERATURE CONTROL
(8W-42-7)
(8W-42-8)
P132 20 OR/BK
C15 20 BK/WT
C103 20 DG
14 C1
9 C2
REAR WINDOW DEFOGGER SWITCH SENSE
A/C SWITCH SIGNAL
AUTOMATIC ZONE CONTROL MODULE
(8W-42-4)
(8W-42-5)
1
6
DRIVER HEATED SEAT SWITCH
0 OFF
1 LOW
2 HIGH
(8W-63-10)
P132 20 OR/BK
6
1
PASSENGER HEATED SEAT SWITCH
0 OFF
1 LOW
2 HIGH
(8W-63-10)

8W-47 AUDIO SYSTEM

Component	Page
Antenna	8W-47-2
Body Control Module	8W-47-2, 3, 10
Clockspring	8W-47-10
Compact Disc Changer	8W-47-6
Diagnostic Junction Port	8W-47-6, 10
Fuse 5 (JB)	8W-47-2, 3
Fuse 30 (JB)	8W-47-2, 3
G300	8W-47-2, 3
Junction Block	8W-47-2, 3
Left Front Door Speaker	8W-47-4, 8
Left Instrument Panel Speaker	8W-47-4, 9
Left Rear Door Speaker	8W-47-5, 8
Left Remote Radio Switch	8W-47-10
Power Amplifier	8W-47-3, 7, 8, 9
Radio	8W-47-2, 3, 4, 5, 6, 7, 10
Right Front Door Speaker	8W-47-4, 8
Right Instrument Panel Speaker	8W-47-4, 9
Right Rear Door Speaker	8W-47-5, 8
Right Remote Radio Switch	8W-47-10

BASE

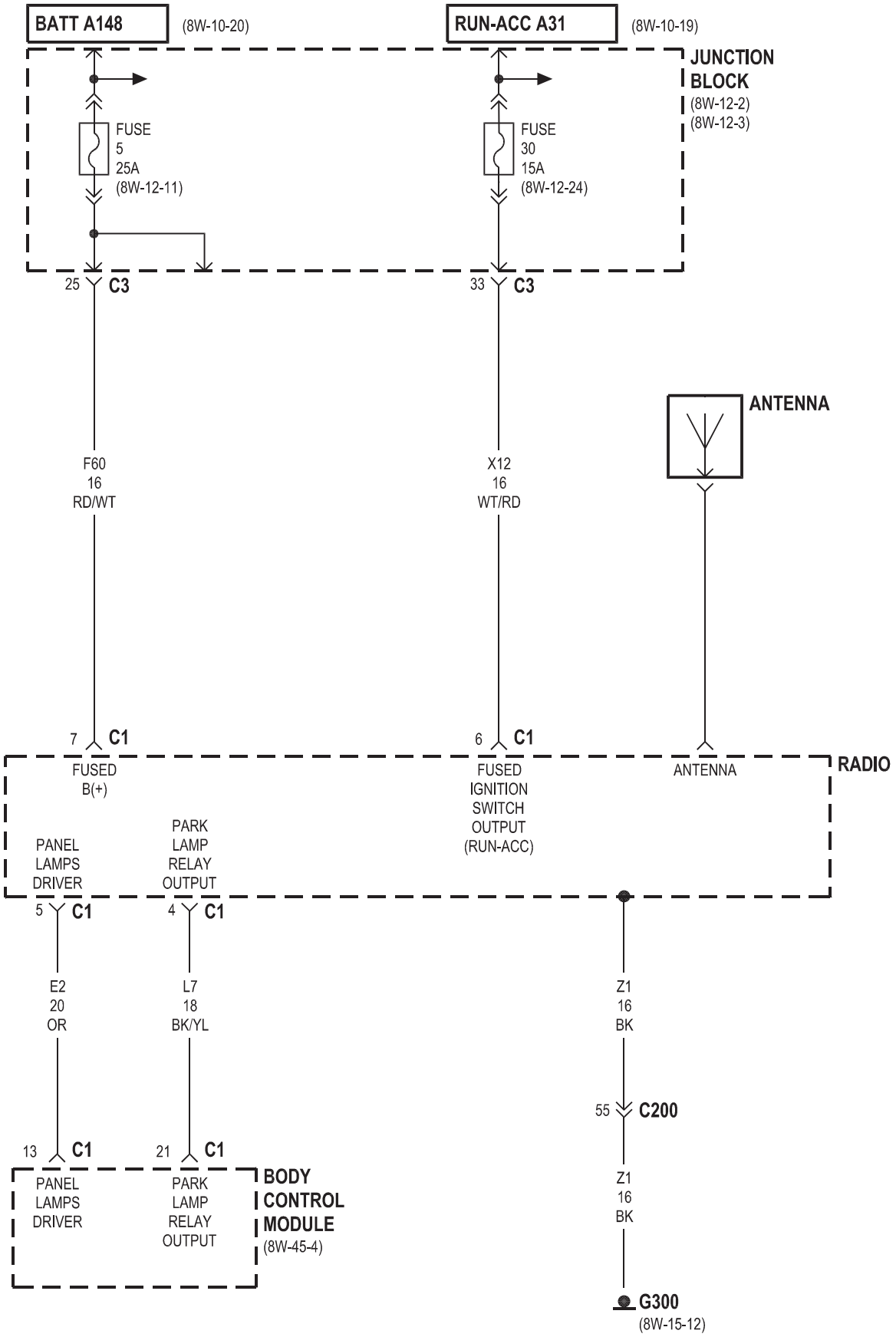
BATT A148
(8W-10-20)
RUN-ACC A31
(8W-10-19)
JUNCTION BLOCK
(8W-12-2)
(8W-12-3)
FUSE 5 25A (8W-12-11)
FUSE 30 15A (8W-12-24)
25 C3
33 C3
ANTENNA
F60 16 RD/WT
X12 16 WT/RD
7 C1
6 C1
FUSED B(+)
FUSED IGNITION SWITCH OUTPUT (RUN-ACC)
ANTENNA
RADIO
PANEL LAMPS DRIVER
PARK LAMP RELAY OUTPUT
5 C1
4 C1
E2 20 OR
L7 18 BK/YL
Z1 16 BK
55 C200
13 C1
21 C1
PANEL LAMPS DRIVER
PARK LAMP RELAY OUTPUT
BODY CONTROL MODULE
(8W-45-4)
Z1 16 BK
G300
(8W-15-12)

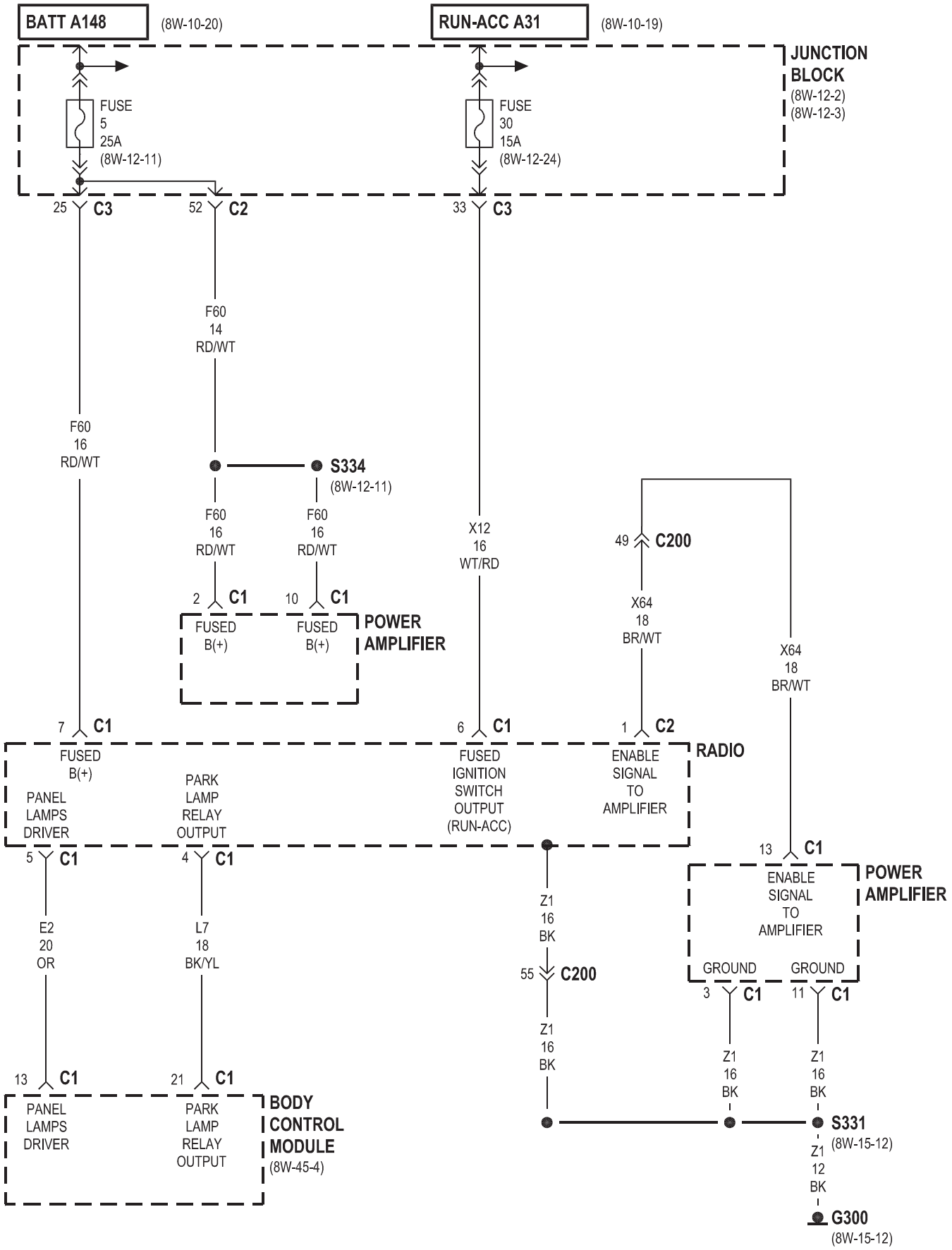
BATT A148
(8W-10-20)
RUN-ACC A31
(8W-10-19)
JUNCTION BLOCK
(8W-12-2)
(8W-12-3)
FUSE 5 25A (8W-12-11)
FUSE 30 15A (8W-12-24)
25 C3
52 C2
33 C3
F60 14 RD/WT
F60 16 RD/WT
S334
(8W-12-11)
F60 16 RD/WT
F60 16 RD/WT
X12 16 WT/RD
49 C200
X64 18 BR/WT
X64 18 BR/WT
2 C1
10 C1
FUSED B(+)
FUSED B(+)
POWER AMPLIFIER
7 C1
6 C1
1 C2
FUSED B(+)
PANEL LAMPS DRIVER
PARK LAMP RELAY OUTPUT
FUSED IGNITION SWITCH OUTPUT (RUN-ACC)
ENABLE SIGNAL TO AMPLIFIER
RADIO
5 C1
4 C1
13 C1
ENABLE SIGNAL TO AMPLIFIER
POWER AMPLIFIER
E2 20 OR
L7 18 BK/YL
Z1 16 BK
55 C200
GROUND
GROUND
3 C1
11 C1
Z1 16 BK
Z1 16 BK
Z1 16 BK
13 C1
21 C1
PANEL LAMPS DRIVER
PARK LAMP RELAY OUTPUT
BODY CONTROL MODULE
(8W-45-4)
S331
(8W-15-12)
Z1 12 BK
G300
(8W-15-12)

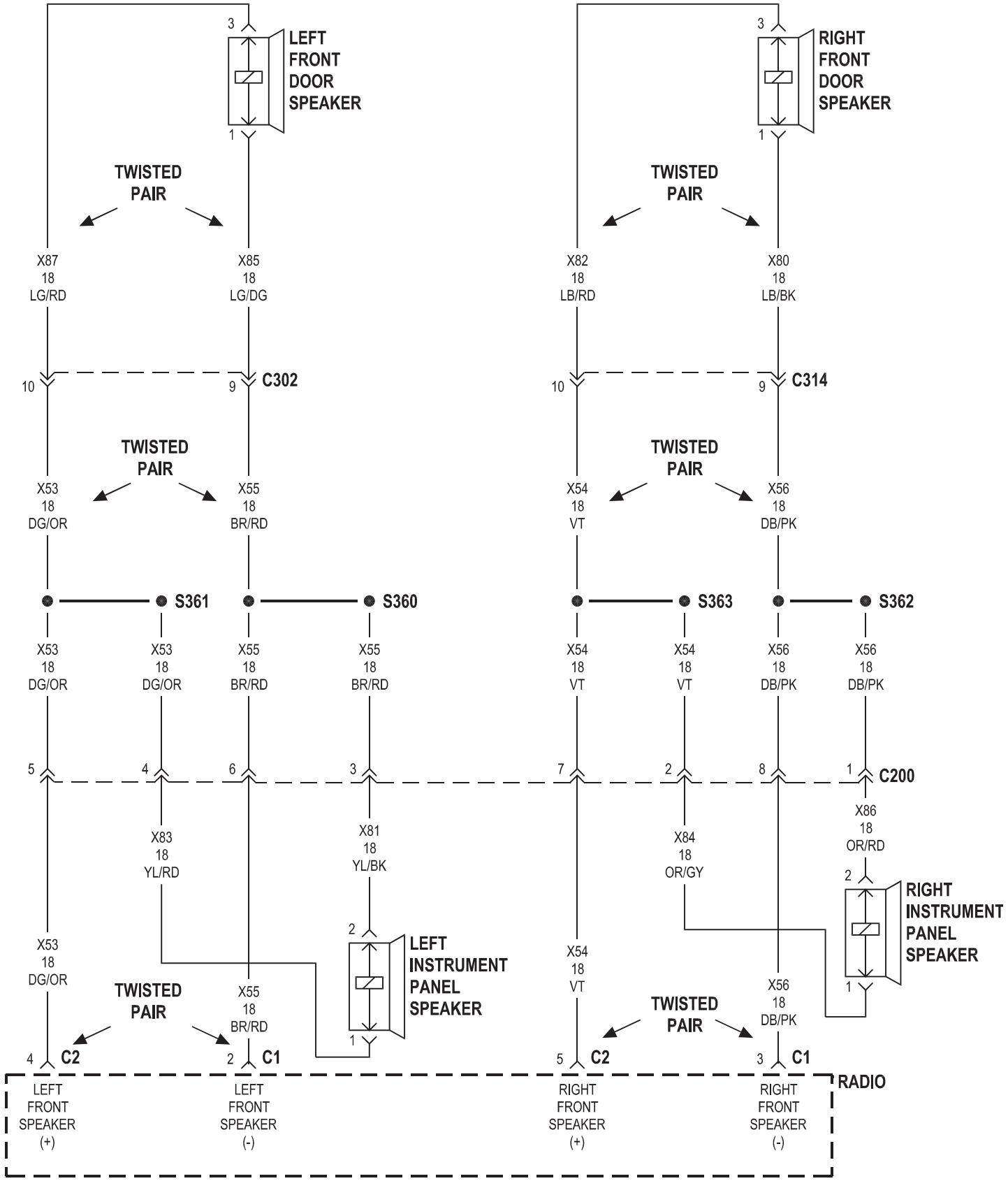
LEFT FRONT DOOR SPEAKER
RIGHT FRONT DOOR SPEAKER
TWISTED PAIR
X87 18 LG/RD
X85 18 LG/DG
X82 18 LB/RD
X80 18 LB/BK
C302
C314
X53 18 DG/OR
X55 18 BR/RD
X54 18 VT
X56 18 DB/PK
S361
S360
S363
S362
X53 18 DG/OR
X53 18 DG/OR
X55 18 BR/RD
X55 18 BR/RD
X54 18 VT
X54 18 VT
X56 18 DB/PK
X56 18 DB/PK
C200
X83 18 YL/RD
X81 18 YL/BK
X84 18 OR/GY
X86 18 OR/RD
RIGHT INSTRUMENT PANEL SPEAKER
LEFT INSTRUMENT PANEL SPEAKER
X53 18 DG/OR
X55 18 BR/RD
X54 18 VT
X56 18 DB/PK
C2
C1
C2
C1
RADIO
LEFT FRONT SPEAKER (+)
LEFT FRONT SPEAKER (-)
RIGHT FRONT SPEAKER (+)
RIGHT FRONT SPEAKER (-)

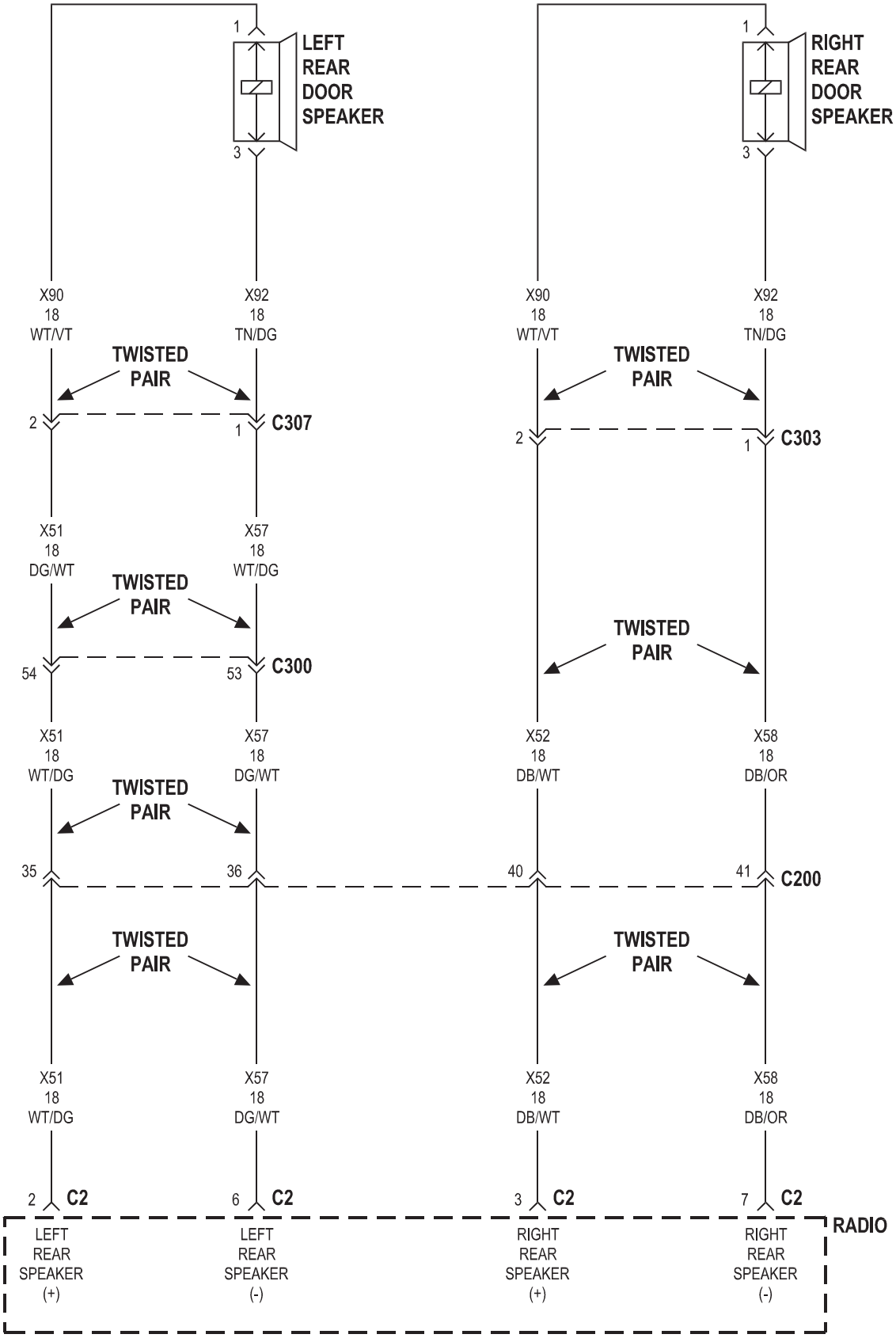
LEFT REAR DOOR SPEAKER
RIGHT REAR DOOR SPEAKER
1
3
X90 18 WT/VT
X92 18 TN/DG
TWISTED PAIR
2
1
C307
C303
X51 18 DG/WT
X57 18 WT/DG
54
53
C300
X52 18 DB/WT
X58 18 DB/OR
35
36
40
41
C200
X51 18 WT/DG
X57 18 DG/WT
X52 18 DB/WT
X58 18 DB/OR
2 C2
6 C2
3 C2
7 C2
RADIO
LEFT REAR SPEAKER (+)
LEFT REAR SPEAKER (-)
RIGHT REAR SPEAKER (+)
RIGHT REAR SPEAKER (-)

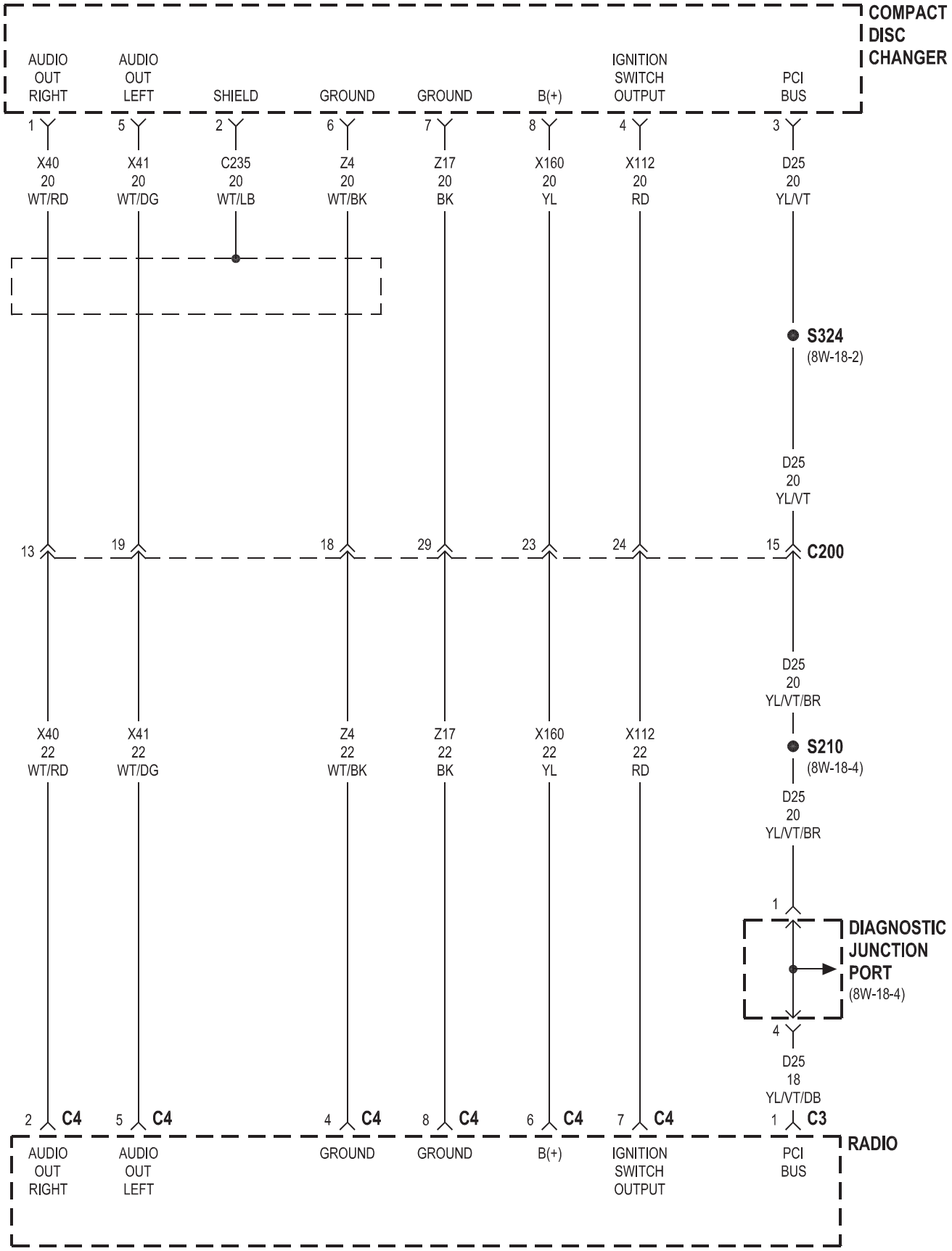
COMPACT DISC CHANGER
AUDIO OUT RIGHT
AUDIO OUT LEFT
SHIELD
GROUND
GROUND
B(+)
IGNITION SWITCH OUTPUT
PCI BUS
1
5
2
6
7
8
4
3
X40 20 WT/RD
X41 20 WT/DG
C235 20 WT/LB
Z4 20 WT/BK
Z17 20 BK
X160 20 YL
X112 20 RD
D25 20 YL/VT
S324
(8W-18-2)
D25 20 YL/VT
13
19
18
29
23
24
15
C200
D25 20 YL/VT/BR
X40 22 WT/RD
X41 22 WT/DG
Z4 22 WT/BK
Z17 22 BK
X160 22 YL
X112 22 RD
S210
(8W-18-4)
D25 20 YL/VT/BR
1
DIAGNOSTIC JUNCTION PORT
(8W-18-4)
4
D25 18 YL/VT/DB
2 C4
5 C4
4 C4
8 C4
6 C4
7 C4
1 C3
RADIO
AUDIO OUT RIGHT
AUDIO OUT LEFT
GROUND
GROUND
B(+)
IGNITION SWITCH OUTPUT
PCI BUS

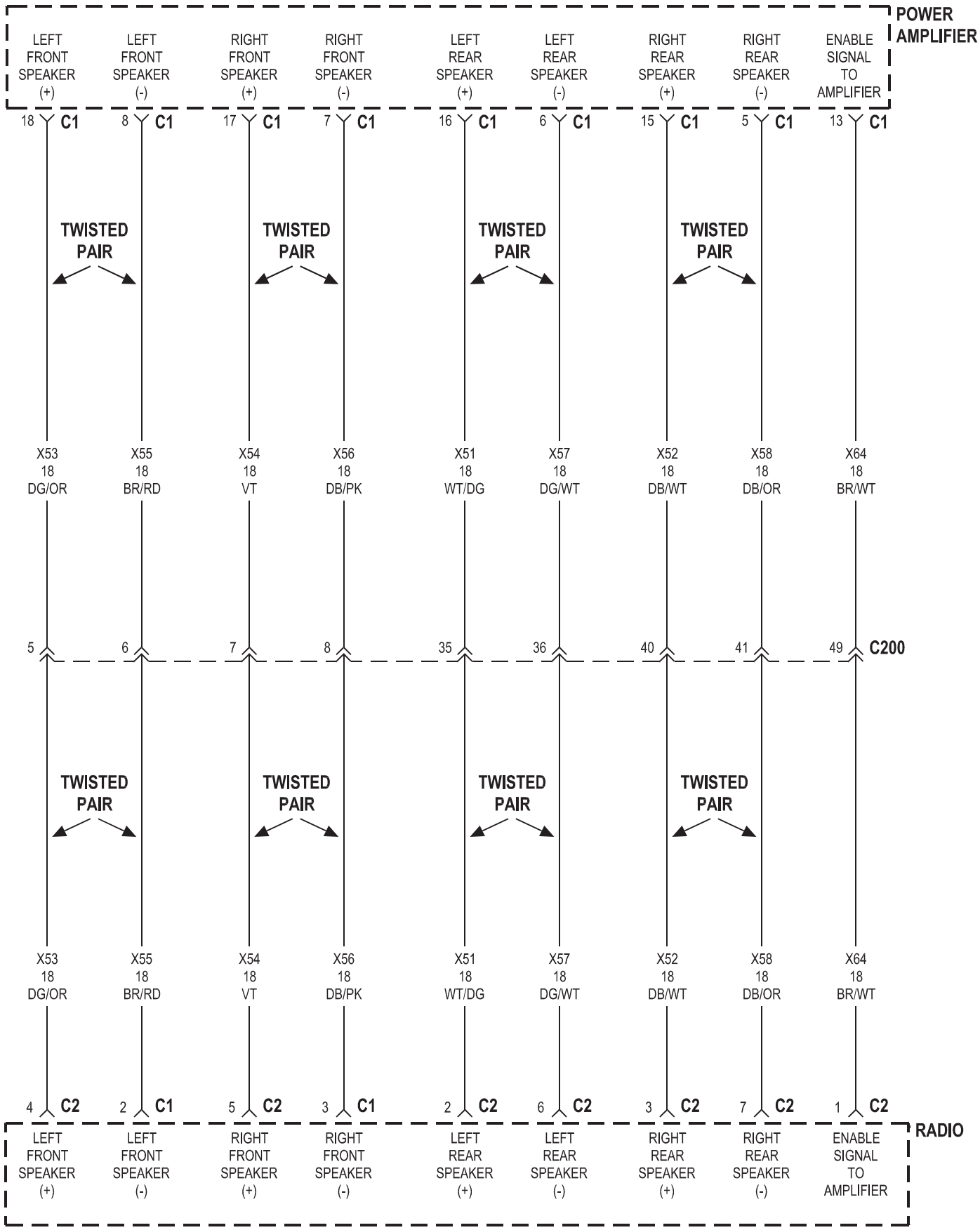
POWER AMPLIFIER
LEFT FRONT SPEAKER (+)
LEFT FRONT SPEAKER (-)
RIGHT FRONT SPEAKER (+)
RIGHT FRONT SPEAKER (-)
LEFT REAR SPEAKER (+)
LEFT REAR SPEAKER (-)
RIGHT REAR SPEAKER (+)
RIGHT REAR SPEAKER (-)
ENABLE SIGNAL TO AMPLIFIER
18 C1
8 C1
17 C1
7 C1
16 C1
6 C1
15 C1
5 C1
13 C1
TWISTED PAIR
X53 18 DG/OR
X55 18 BR/RD
X54 18 VT
X56 18 DB/PK
X51 18 WT/DG
X57 18 DG/WT
X52 18 DB/WT
X58 18 DB/OR
X64 18 BR/WT
5
6
7
8
35
36
40
41
49
C200
TWISTED PAIR
X53 18 DG/OR
X55 18 BR/RD
X54 18 VT
X56 18 DB/PK
X51 18 WT/DG
X57 18 DG/WT
X52 18 DB/WT
X58 18 DB/OR
X64 18 BR/WT
4 C2
2 C1
5 C2
3 C1
2 C2
6 C2
3 C2
7 C2
1 C2
RADIO
LEFT FRONT SPEAKER (+)
LEFT FRONT SPEAKER (-)
RIGHT FRONT SPEAKER (+)
RIGHT FRONT SPEAKER (-)
LEFT REAR SPEAKER (+)
LEFT REAR SPEAKER (-)
RIGHT REAR SPEAKER (+)
RIGHT REAR SPEAKER (-)
ENABLE SIGNAL TO AMPLIFIER

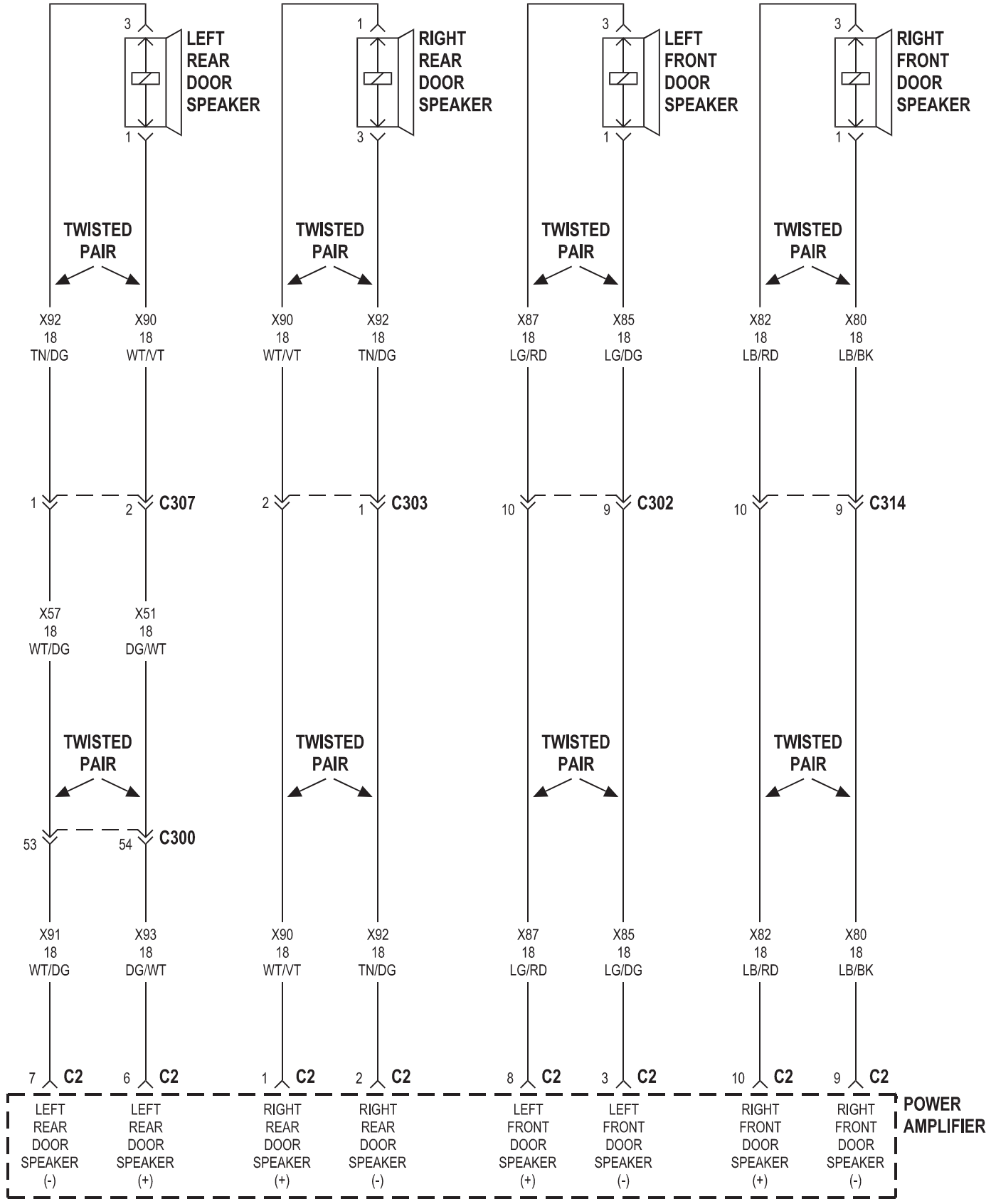
LEFT REAR DOOR SPEAKER
RIGHT REAR DOOR SPEAKER
LEFT FRONT DOOR SPEAKER
RIGHT FRONT DOOR SPEAKER
TWISTED PAIR
X92 18 TN/DG
X90 18 WT/VT
X90 18 WT/VT
X92 18 TN/DG
X87 18 LG/RD
X85 18 LG/DG
X82 18 LB/RD
X80 18 LB/BK
C307
C303
C302
C314
X57 18 WT/DG
X51 18 DG/WT
C300
X91 18 WT/DG
X93 18 DG/WT
X90 18 WT/VT
X92 18 TN/DG
X87 18 LG/RD
X85 18 LG/DG
X82 18 LB/RD
X80 18 LB/BK
C2
LEFT REAR DOOR SPEAKER (-)
LEFT REAR DOOR SPEAKER (+)
RIGHT REAR DOOR SPEAKER (+)
RIGHT REAR DOOR SPEAKER (-)
LEFT FRONT DOOR SPEAKER (+)
LEFT FRONT DOOR SPEAKER (-)
RIGHT FRONT DOOR SPEAKER (+)
RIGHT FRONT DOOR SPEAKER (-)
POWER AMPLIFIER

PREMIUM

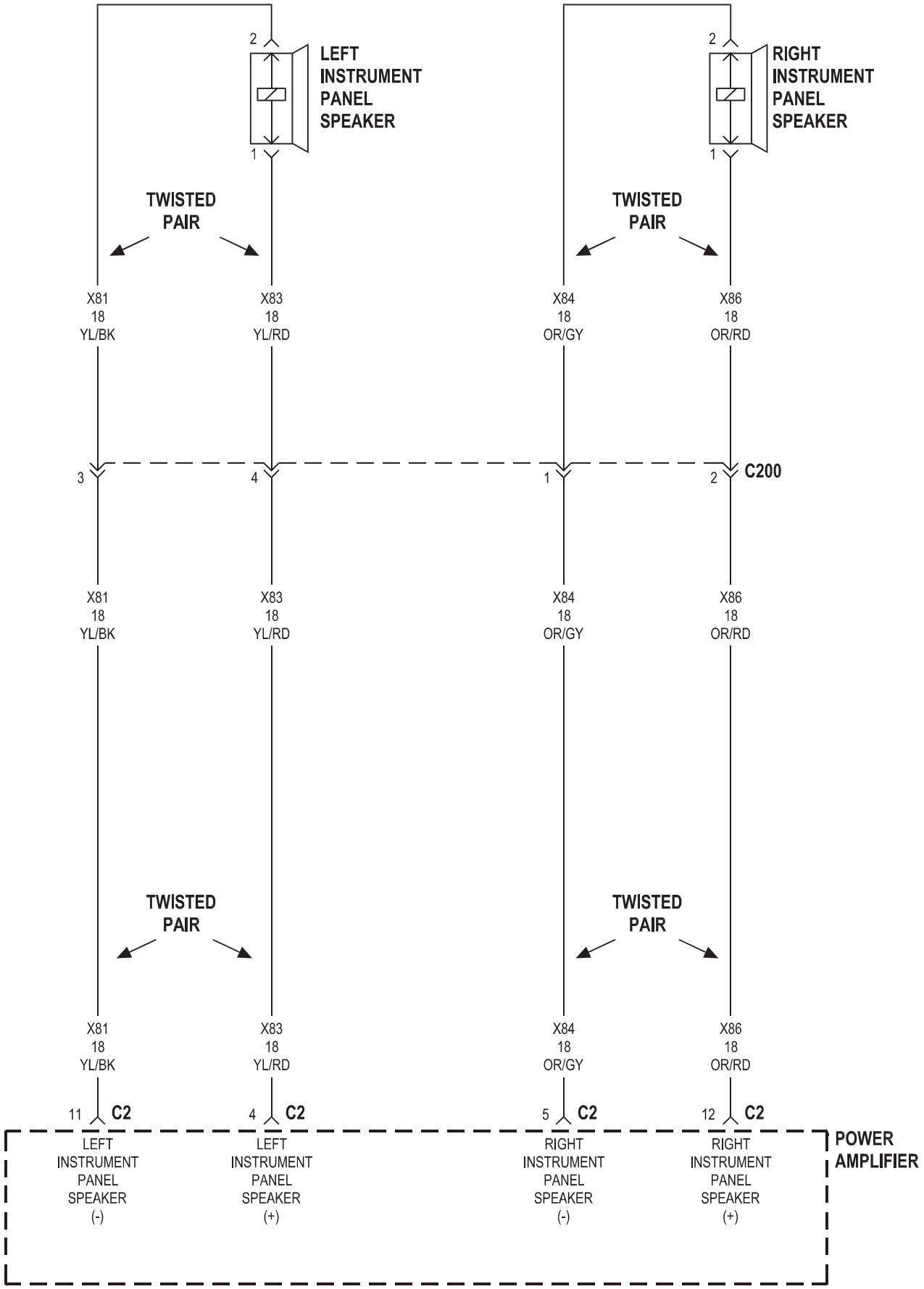
2
LEFT INSTRUMENT PANEL SPEAKER
1
2
RIGHT INSTRUMENT PANEL SPEAKER
1
TWISTED PAIR
TWISTED PAIR
X81 18 YL/BK
X83 18 YL/RD
X84 18 OR/GY
X86 18 OR/RD
3
4
1
2
C200
X81 18 YL/BK
X83 18 YL/RD
X84 18 OR/GY
X86 18 OR/RD
TWISTED PAIR
TWISTED PAIR
X81 18 YL/BK
X83 18 YL/RD
X84 18 OR/GY
X86 18 OR/RD
11 C2
4 C2
5 C2
12 C2
LEFT INSTRUMENT PANEL SPEAKER (-)
LEFT INSTRUMENT PANEL SPEAKER (+)
RIGHT INSTRUMENT PANEL SPEAKER (-)
RIGHT INSTRUMENT PANEL SPEAKER (+)
POWER AMPLIFIER

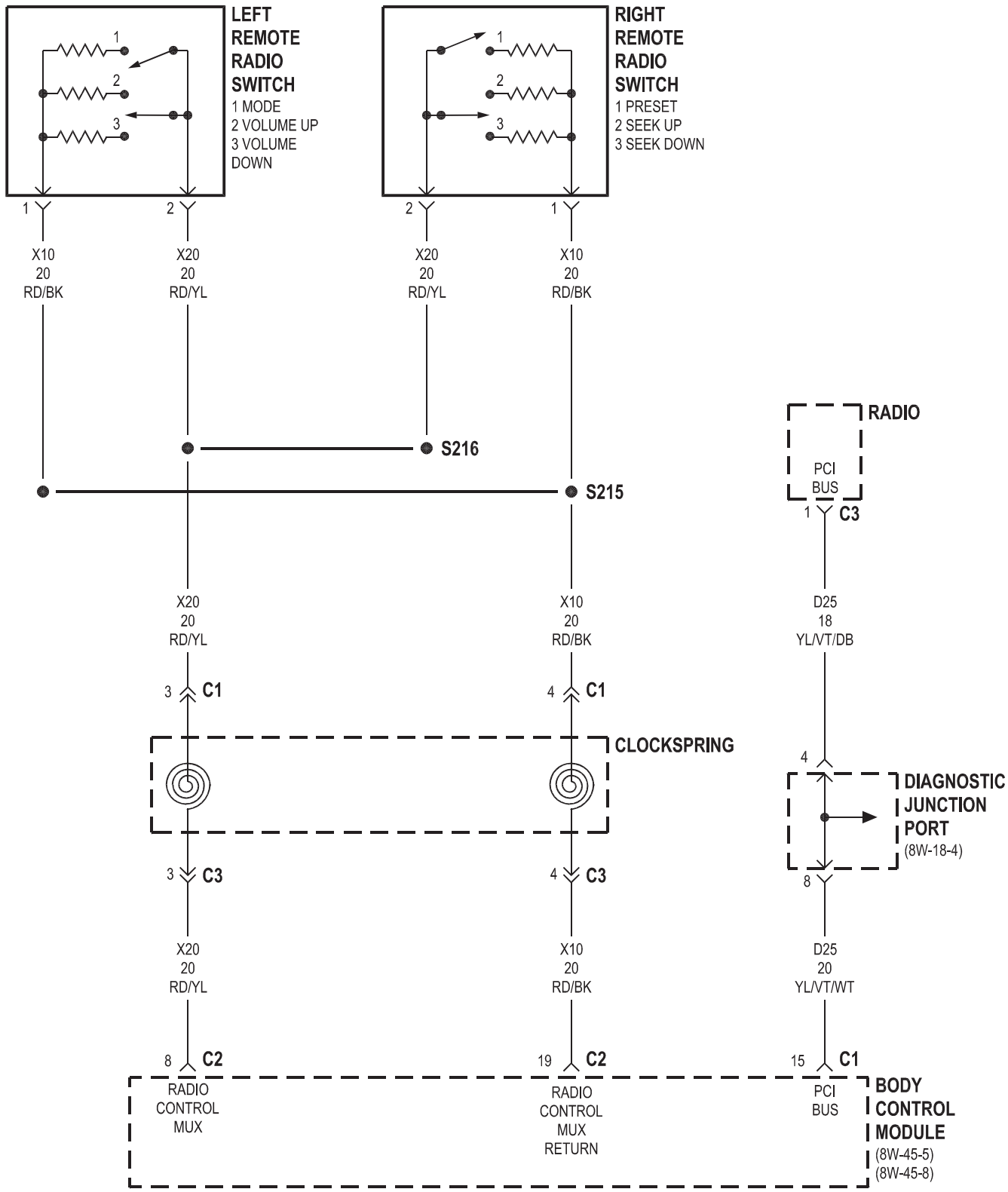
LEFT REMOTE RADIO SWITCH
1 MODE
2 VOLUME UP
3 VOLUME DOWN
RIGHT REMOTE RADIO SWITCH
1 PRESET
2 SEEK UP
3 SEEK DOWN
X10 20 RD/BK
X20 20 RD/YL
X20 20 RD/YL
X10 20 RD/BK
S216
S215
RADIO
PCI BUS
C3
D25 18 YL/VT/DB
X20 20 RD/YL
X10 20 RD/BK
C1
C1
CLOCKSPRING
DIAGNOSTIC JUNCTION PORT
(8W-18-4)
C3
C3
X20 20 RD/YL
X10 20 RD/BK
D25 20 YL/VT/WT
C2
C2
C1
RADIO CONTROL MUX
RADIO CONTROL MUX RETURN
PCI BUS
BODY CONTROL MODULE
(8W-45-5)
(8W-45-8)

8W-48 REAR WINDOW DEFOGGER

Component	Page
Automatic Zone Control Module	8W-48-2
Body Control Module	8W-48-2
Fuse 11 (JB)	8W-48-2
G301	8W-48-2
Junction Block	8W-48-2
Manual Temperature Control	8W-48-2
Rear Window Defogger	8W-48-2
Rear Window Defogger Relay	8W-48-2

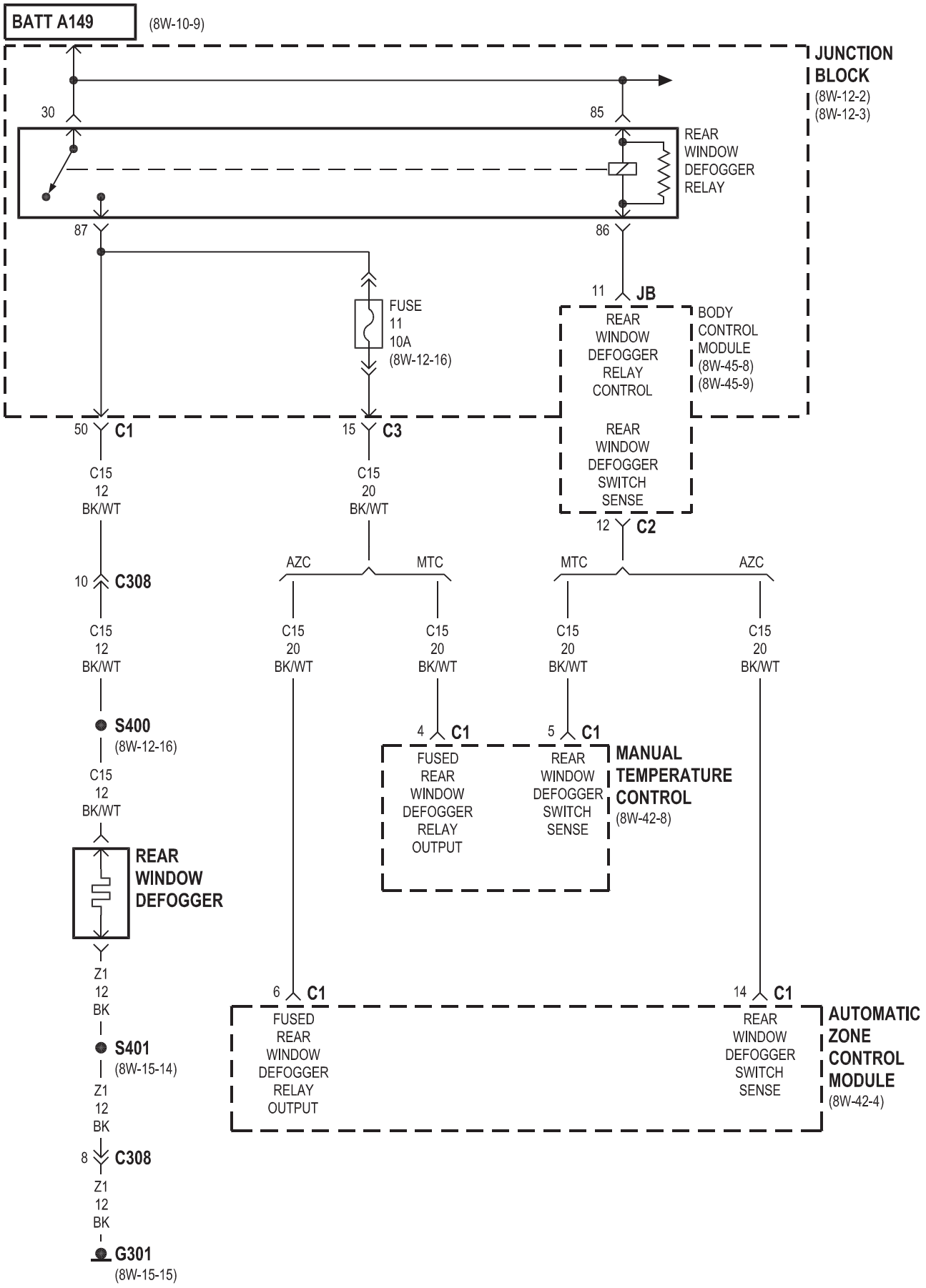
BATT A149
(8W-10-9)
JUNCTION BLOCK
(8W-12-2)
(8W-12-3)
30
85
REAR WINDOW DEFOGGER RELAY
87
86
FUSE 11 10A
(8W-12-16)
11
JB
REAR WINDOW DEFOGGER RELAY CONTROL
BODY CONTROL MODULE
(8W-45-8)
(8W-45-9)
50
C1
15
C3
REAR WINDOW DEFOGGER SWITCH SENSE
C15 12 BK/WT
C15 20 BK/WT
12
C2
AZC
MTC
MTC
AZC
10
C308
C15 12 BK/WT
C15 20 BK/WT
C15 20 BK/WT
C15 20 BK/WT
C15 20 BK/WT
S400
(8W-12-16)
4
C1
5
C1
FUSED REAR WINDOW DEFOGGER RELAY OUTPUT
REAR WINDOW DEFOGGER SWITCH SENSE
MANUAL TEMPERATURE CONTROL
(8W-42-8)
C15 12 BK/WT
REAR WINDOW DEFOGGER
Z1 12 BK
6
C1
14
C1
FUSED REAR WINDOW DEFOGGER RELAY OUTPUT
REAR WINDOW DEFOGGER SWITCH SENSE
AUTOMATIC ZONE CONTROL MODULE
(8W-42-4)
S401
(8W-15-14)
Z1 12 BK
8
C308
Z1 12 BK
G301
(8W-15-15)

8W-49 OVERHEAD CONSOLE

Component	Page
Automatic Day/Night Mirror	8W-49-3, 4
Diagnostic Junction Port	8W-49-2
Driver Power Mirror	8W-49-3
Fuse 8 (JB)	8W-49-2
Fuse 22 (JB)	8W-49-2, 3
G301	8W-49-2, 4
Junction Block	8W-49-2, 3
Left Rear Lamp Assembly	8W-49-4
Park/Neutral Position Switch	8W-49-4
Transmission Solenoid/TRS Assembly	8W-49-4
Vehicle Information Center	8W-49-2

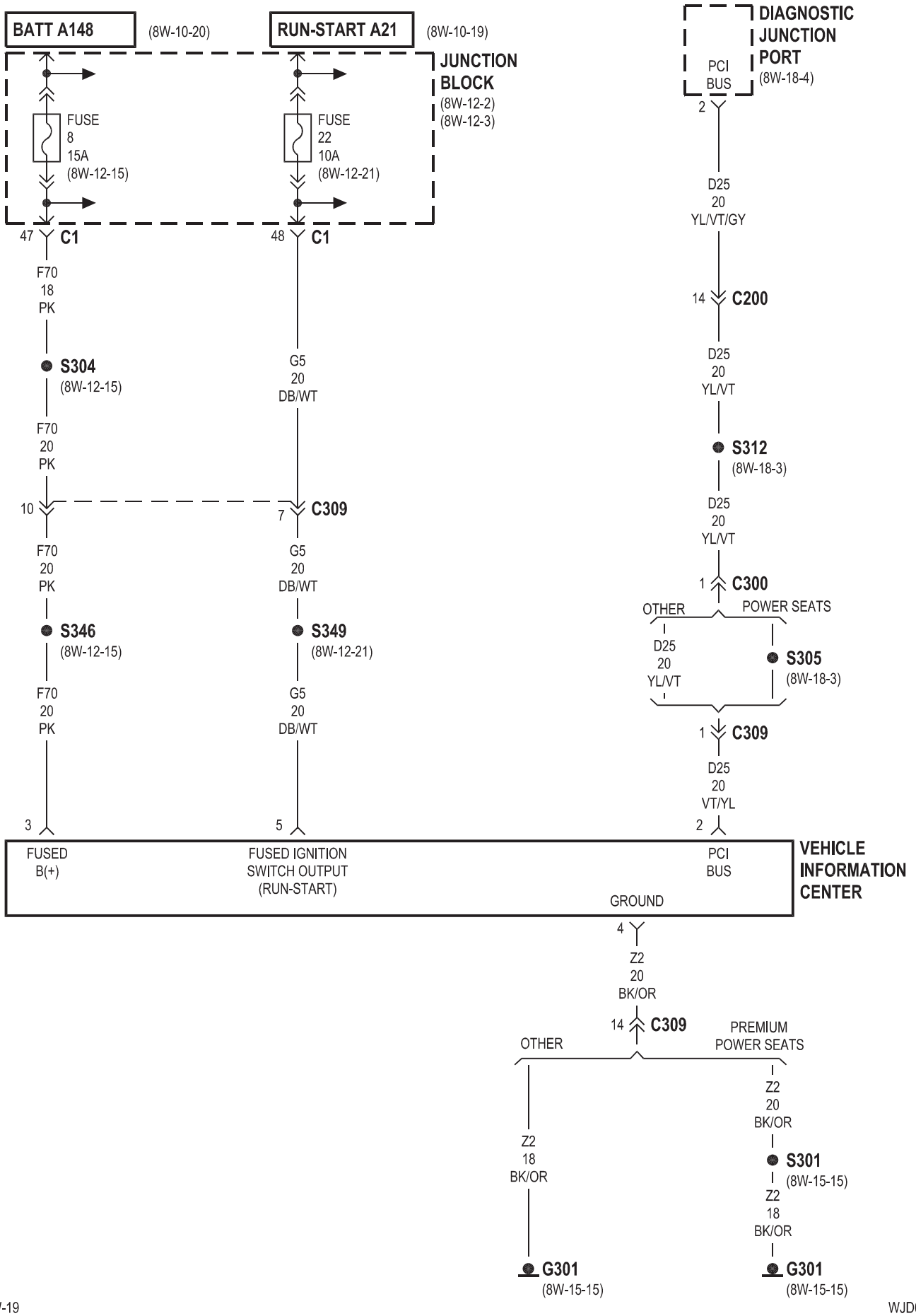
BATT A148
(8W-10-20)
RUN-START A21
(8W-10-19)
JUNCTION BLOCK
(8W-12-2)
(8W-12-3)
FUSE 8 15A (8W-12-15)
FUSE 22 10A (8W-12-21)
47 C1
48 C1
F70 18 PK
S304
(8W-12-15)
F70 20 PK
G5 20 DB/WT
10
7 C309
F70 20 PK
G5 20 DB/WT
S346
(8W-12-15)
S349
(8W-12-21)
F70 20 PK
G5 20 DB/WT
3
5
DIAGNOSTIC JUNCTION PORT
(8W-18-4)
PCI BUS
2
D25 20 YL/VT/GY
14 C200
D25 20 YL/VT
S312
(8W-18-3)
D25 20 YL/VT
1 C300
OTHER
POWER SEATS
D25 20 YL/VT
S305
(8W-18-3)
1 C309
D25 20 VT/YL
2
FUSED B(+)
FUSED IGNITION SWITCH OUTPUT (RUN-START)
PCI BUS
GROUND
VEHICLE INFORMATION CENTER
4
Z2 20 BK/OR
14 C309
OTHER
PREMIUM POWER SEATS
Z2 18 BK/OR
Z2 20 BK/OR
S301
(8W-15-15)
Z2 18 BK/OR
G301
(8W-15-15)
G301
(8W-15-15)

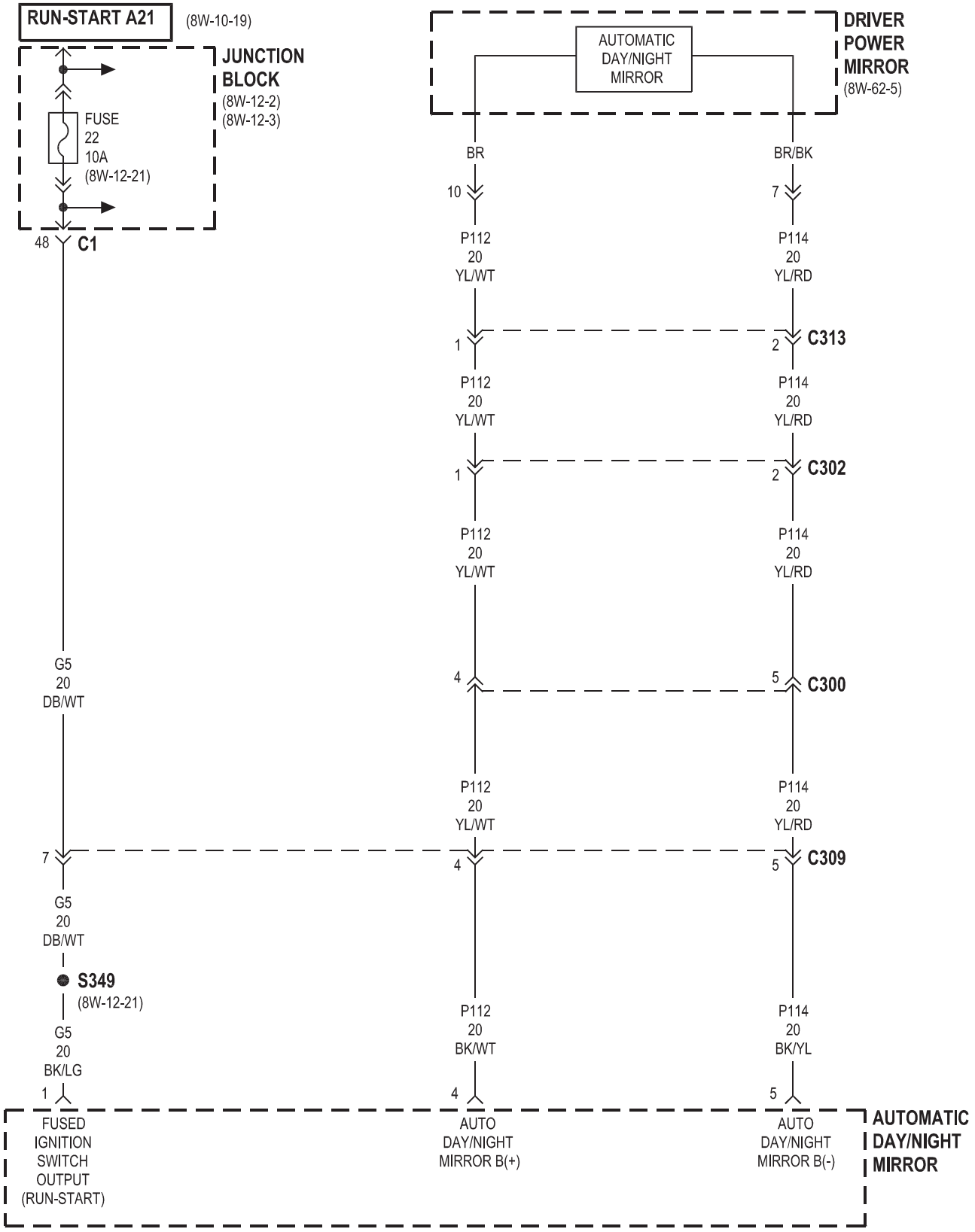
RUN-START A21
(8W-10-19)
JUNCTION BLOCK
(8W-12-2)
(8W-12-3)
FUSE
22
10A
(8W-12-21)
48
C1
G5
20
DB/WT
7
G5
20
DB/WT
S349
(8W-12-21)
G5
20
BK/LG
1
FUSED IGNITION SWITCH OUTPUT (RUN-START)
DRIVER POWER MIRROR
(8W-62-5)
AUTOMATIC DAY/NIGHT MIRROR
BR
BR/BK
10
7
P112
20
YL/WT
P114
20
YL/RD
1
2
C313
P112
20
YL/WT
P114
20
YL/RD
1
2
C302
P112
20
YL/WT
P114
20
YL/RD
4
5
C300
P112
20
YL/WT
P114
20
YL/RD
4
5
C309
P112
20
BK/WT
P114
20
BK/YL
4
5
AUTO DAY/NIGHT MIRROR B(+)
AUTO DAY/NIGHT MIRROR B(-)
AUTOMATIC DAY/NIGHT MIRROR

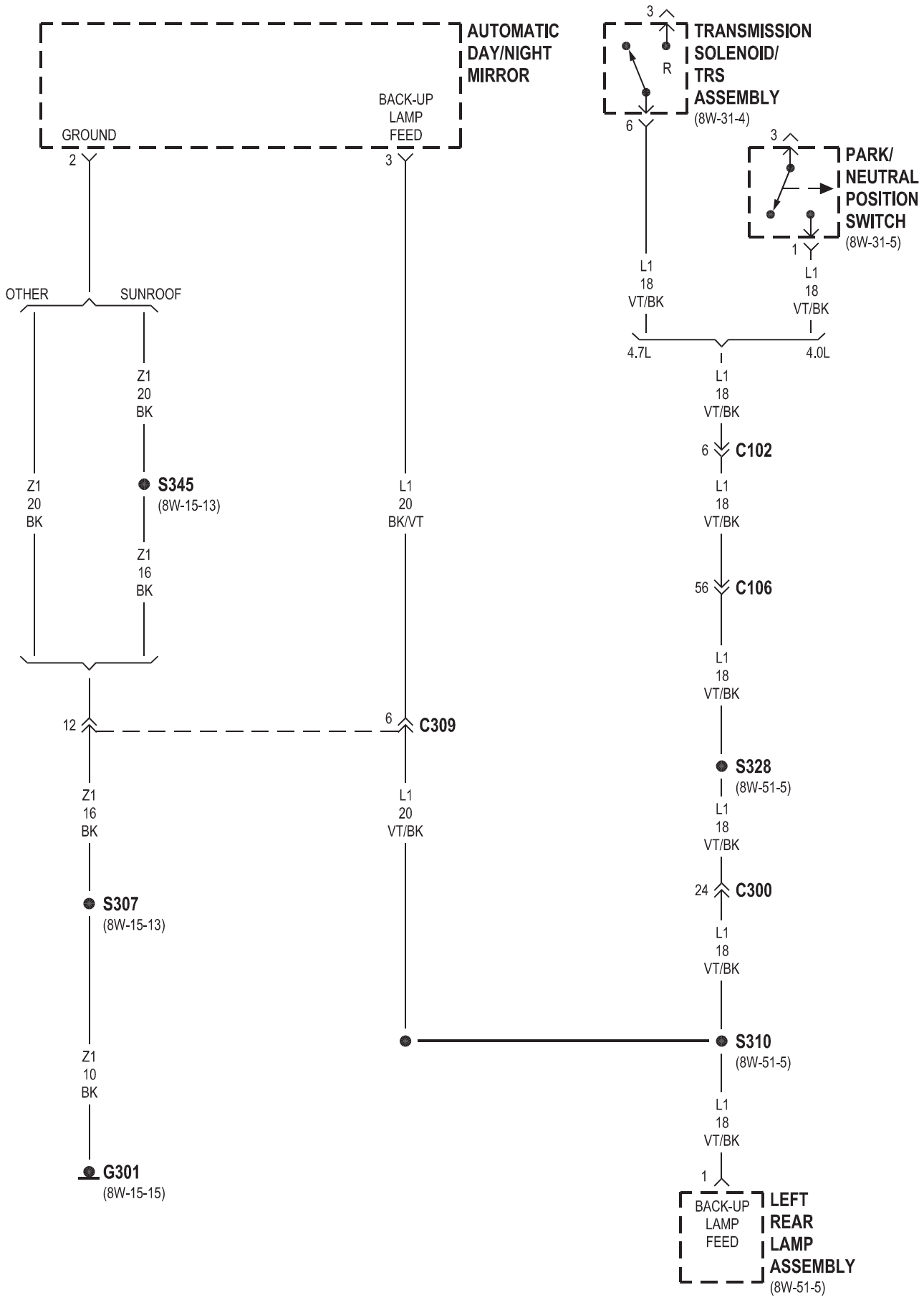
AUTOMATIC DAY/NIGHT MIRROR
GROUND
2
BACK-UP LAMP FEED
3
TRANSMISSION SOLENOID/ TRS ASSEMBLY
(8W-31-4)
3
R
6
PARK/ NEUTRAL POSITION SWITCH
(8W-31-5)
3
1
L1 18 VT/BK
L1 18 VT/BK
4.7L
4.0L
OTHER
SUNROOF
Z1 20 BK
S345
(8W-15-13)
Z1 16 BK
Z1 20 BK
L1 20 BK/VT
L1 18 VT/BK
6
C102
L1 18 VT/BK
56
C106
L1 18 VT/BK
12
6
C309
S328
(8W-51-5)
Z1 16 BK
L1 20 VT/BK
L1 18 VT/BK
24
C300
S307
(8W-15-13)
L1 18 VT/BK
S310
(8W-51-5)
Z1 10 BK
L1 18 VT/BK
G301
(8W-15-15)
1
BACK-UP LAMP FEED
LEFT REAR LAMP ASSEMBLY
(8W-51-5)

8W-50 FRONT LIGHTING

Component	Page
Automatic Headlamp Light Sensor/VTSS LED	8W-50-2
Body Control Module	8W-50-2, 3, 4, 6, 9, 10
Combination Flasher	8W-50-3, 6
Fog Lamp Relay	8W-50-9
Fuse 3 (JB)	8W-50-4
Fuse 6 (JB)	8W-50-6
Fuse 14 (JB)	8W-50-4, 10
Fuse 15 (JB)	8W-50-4, 10
Fuse 16 (JB)	8W-50-4
Fuse 24 (JB)	8W-50-9
G106	8W-50-5, 8, 9, 10
G108	8W-50-5, 7, 9, 10
G200	8W-50-3, 6, 10
High Beam Relay	8W-50-3, 4
Junction Block	8W-50-3, 4, 6, 9, 10
Left Fog Lamp	8W-50-9
Left Front Park Lamp	8W-50-8
Left Front Park/Turn Signal Lamp	8W-50-8
Left Front Side Marker Lamp	8W-50-8
Left High Beam Headlamp	8W-50-5
Left Low Beam Headlamp	8W-50-5, 10
Left Multi-Function Switch	8W-50-2, 3, 4
Low Beam Relay	8W-50-4
Low Beam/Daytime Running Lamp Relay	8W-50-10
Park Lamp Relay	8W-50-6
Right Fog Lamp	8W-50-9
Right Front Park Lamp	8W-50-7
Right Front Park/Turn Signal Lamp	8W-50-7
Right Front Side Marker Lamp	8W-50-7
Right High Beam Headlamp	8W-50-5
Right Low Beam Headlamp	8W-50-5, 10
Right Rear Lamp Assembly	8W-50-7

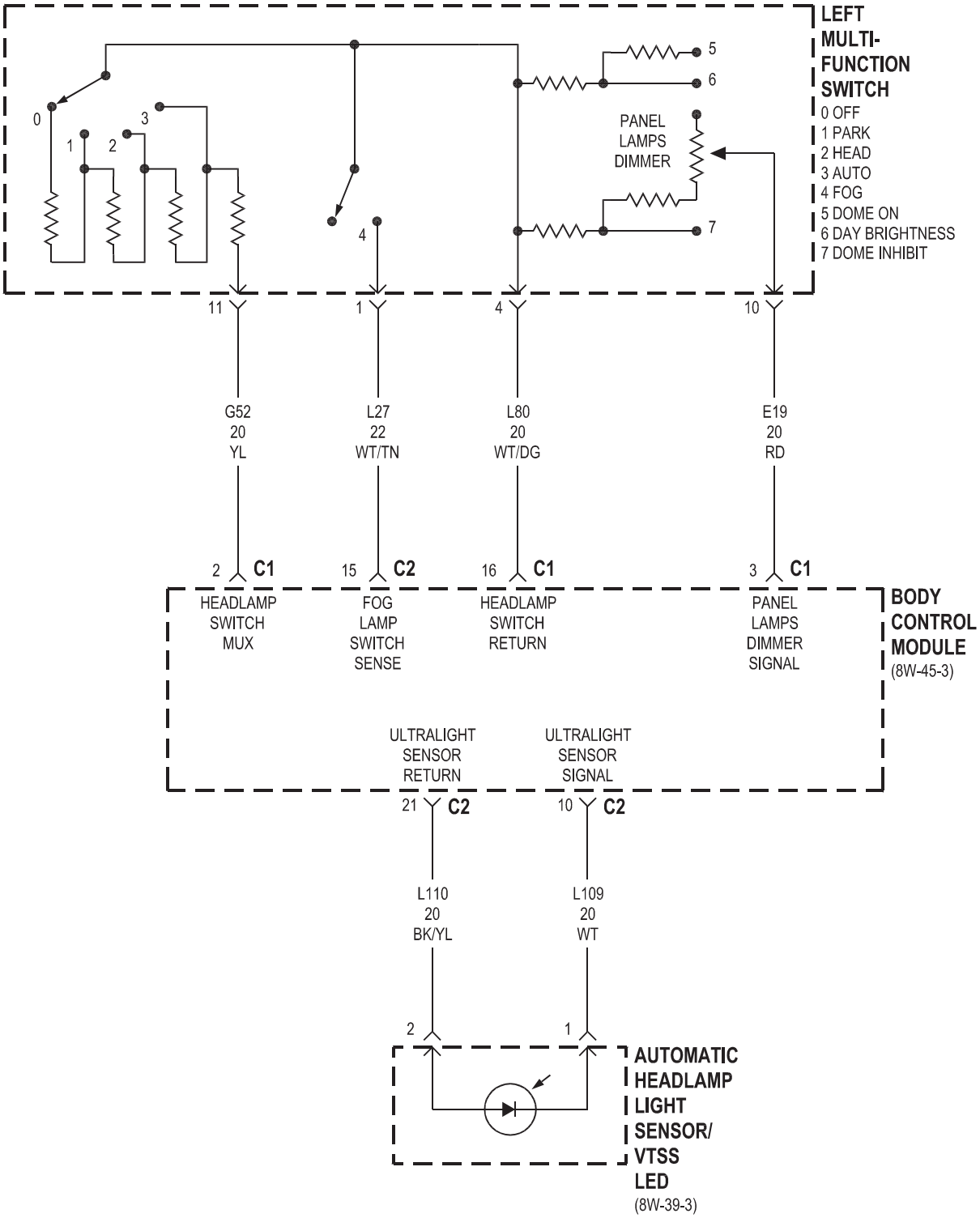
LEFT MULTI-FUNCTION SWITCH
0 OFF
1 PARK
2 HEAD
3 AUTO
4 FOG
5 DOME ON
6 DAY BRIGHTNESS
7 DOME INHIBIT
PANEL LAMPS DIMMER
0
1
2
3
4
5
6
7
11
1
4
10
G52 20 YL
L27 22 WT/TN
L80 20 WT/DG
E19 20 RD
2 C1
15 C2
16 C1
3 C1
HEADLAMP SWITCH MUX
FOG LAMP SWITCH SENSE
HEADLAMP SWITCH RETURN
PANEL LAMPS DIMMER SIGNAL
BODY CONTROL MODULE
(8W-45-3)
ULTRALIGHT SENSOR RETURN
ULTRALIGHT SENSOR SIGNAL
21 C2
10 C2
L110 20 BK/YL
L109 20 WT
2
1
AUTOMATIC HEADLAMP LIGHT SENSOR/ VTSS LED
(8W-39-3)

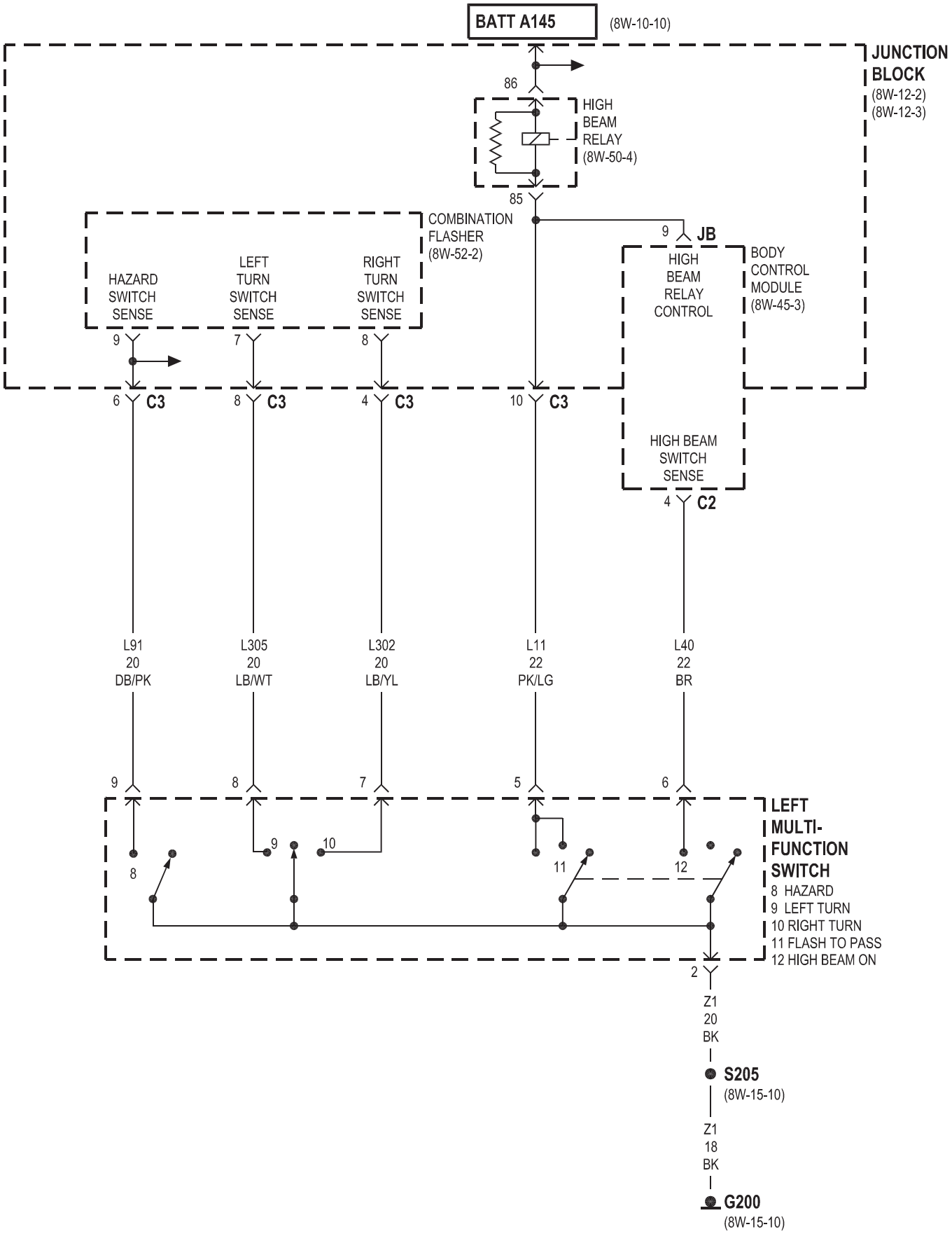
BATT A145
(8W-10-10)
JUNCTION BLOCK
(8W-12-2)
(8W-12-3)
86
HIGH BEAM RELAY
(8W-50-4)
85
COMBINATION FLASHER
(8W-52-2)
9
JB
HIGH BEAM RELAY CONTROL
BODY CONTROL MODULE
(8W-45-3)
HAZARD SWITCH SENSE
LEFT TURN SWITCH SENSE
RIGHT TURN SWITCH SENSE
9
7
8
6 C3
8 C3
4 C3
10 C3
HIGH BEAM SWITCH SENSE
4 C2
L91
20
DB/PK
L305
20
LB/WT
L302
20
LB/YL
L11
22
PK/LG
L40
22
BR
9
8
7
5
6
LEFT MULTI-FUNCTION SWITCH
8 HAZARD
9 LEFT TURN
10 RIGHT TURN
11 FLASH TO PASS
12 HIGH BEAM ON
2
Z1
20
BK
S205
(8W-15-10)
Z1
18
BK
G200
(8W-15-10)

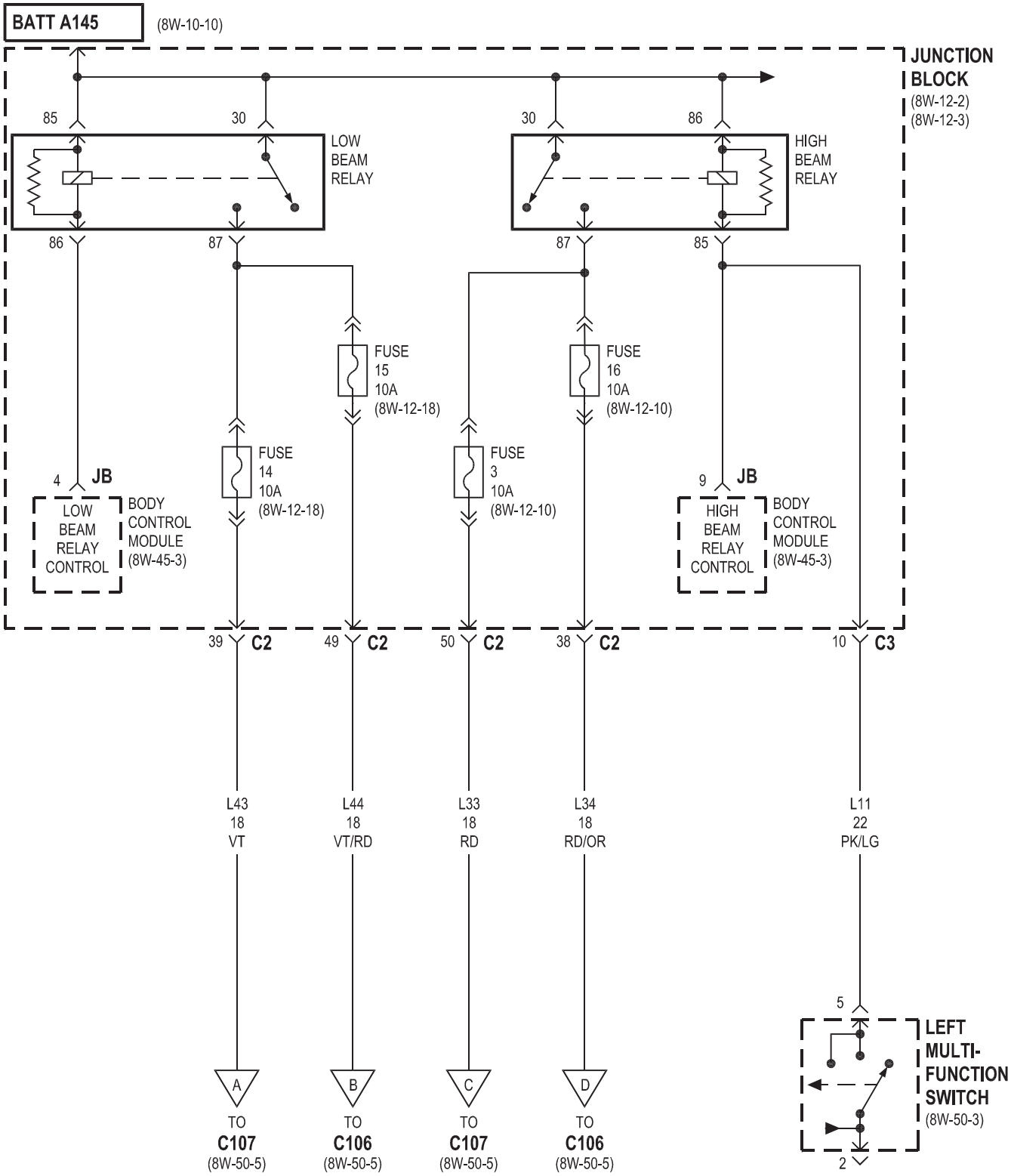
BATT A145
(8W-10-10)
JUNCTION BLOCK
(8W-12-2)
(8W-12-3)
85
30
30
86
LOW BEAM RELAY
HIGH BEAM RELAY
86
87
87
85
FUSE 15 10A (8W-12-18)
FUSE 16 10A (8W-12-10)
FUSE 14 10A (8W-12-18)
FUSE 3 10A (8W-12-10)
4 JB
LOW BEAM RELAY CONTROL
BODY CONTROL MODULE (8W-45-3)
9 JB
HIGH BEAM RELAY CONTROL
BODY CONTROL MODULE (8W-45-3)
39 C2
49 C2
50 C2
38 C2
10 C3
L43 18 VT
L44 18 VT/RD
L33 18 RD
L34 18 RD/OR
L11 22 PK/LG
5
LEFT MULTI-FUNCTION SWITCH
(8W-50-3)
2
A
B
C
D
TO C107 (8W-50-5)
TO C106 (8W-50-5)
TO C107 (8W-50-5)
TO C106 (8W-50-5)

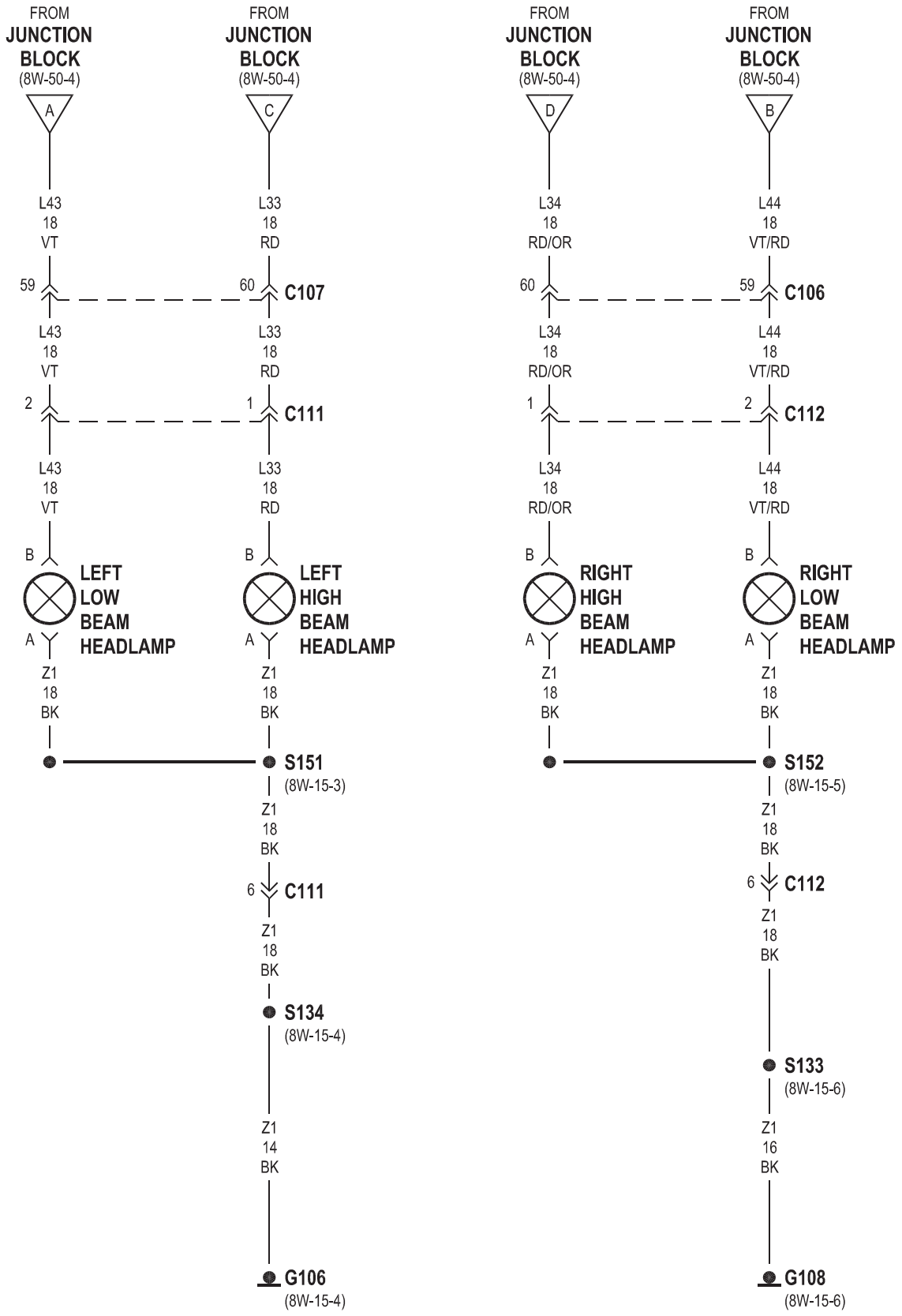
FROM JUNCTION BLOCK (8W-50-4)
A
C
D
B
L43 18 VT
L33 18 RD
L34 18 RD/OR
L44 18 VT/RD
59
60
C107
C106
2
1
C111
C112
B
A
LEFT LOW BEAM HEADLAMP
LEFT HIGH BEAM HEADLAMP
RIGHT HIGH BEAM HEADLAMP
RIGHT LOW BEAM HEADLAMP
Z1 18 BK
S151 (8W-15-3)
S152 (8W-15-5)
6
S134 (8W-15-4)
S133 (8W-15-6)
Z1 14 BK
Z1 16 BK
G106 (8W-15-4)
G108 (8W-15-6)

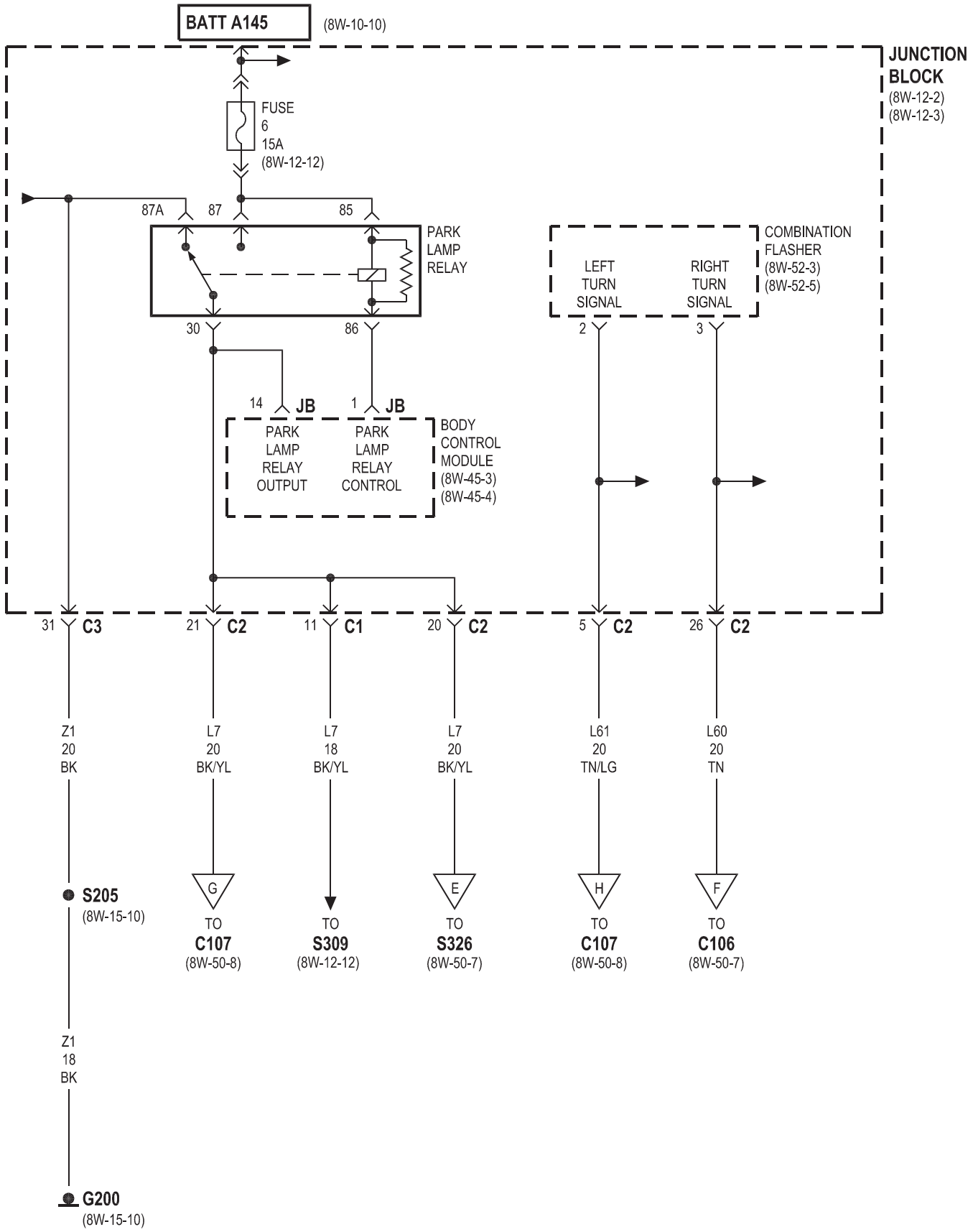
BATT A145
(8W-10-10)
JUNCTION BLOCK
(8W-12-2)
(8W-12-3)
FUSE
6
15A
(8W-12-12)
87A
87
85
PARK LAMP RELAY
30
86
COMBINATION FLASHER
(8W-52-3)
(8W-52-5)
LEFT TURN SIGNAL
RIGHT TURN SIGNAL
2
3
14
JB
1
JB
PARK LAMP RELAY OUTPUT
PARK LAMP RELAY CONTROL
BODY CONTROL MODULE
(8W-45-3)
(8W-45-4)
31
C3
21
C2
11
C1
20
C2
5
C2
26
C2
Z1
20
BK
L7
20
BK/YL
L7
18
BK/YL
L7
20
BK/YL
L61
20
TN/LG
L60
20
TN
S205
(8W-15-10)
G
E
H
F
TO
C107
(8W-50-8)
TO
S309
(8W-12-12)
TO
S326
(8W-50-7)
TO
C107
(8W-50-8)
TO
C106
(8W-50-7)
Z1
18
BK
G200
(8W-15-10)

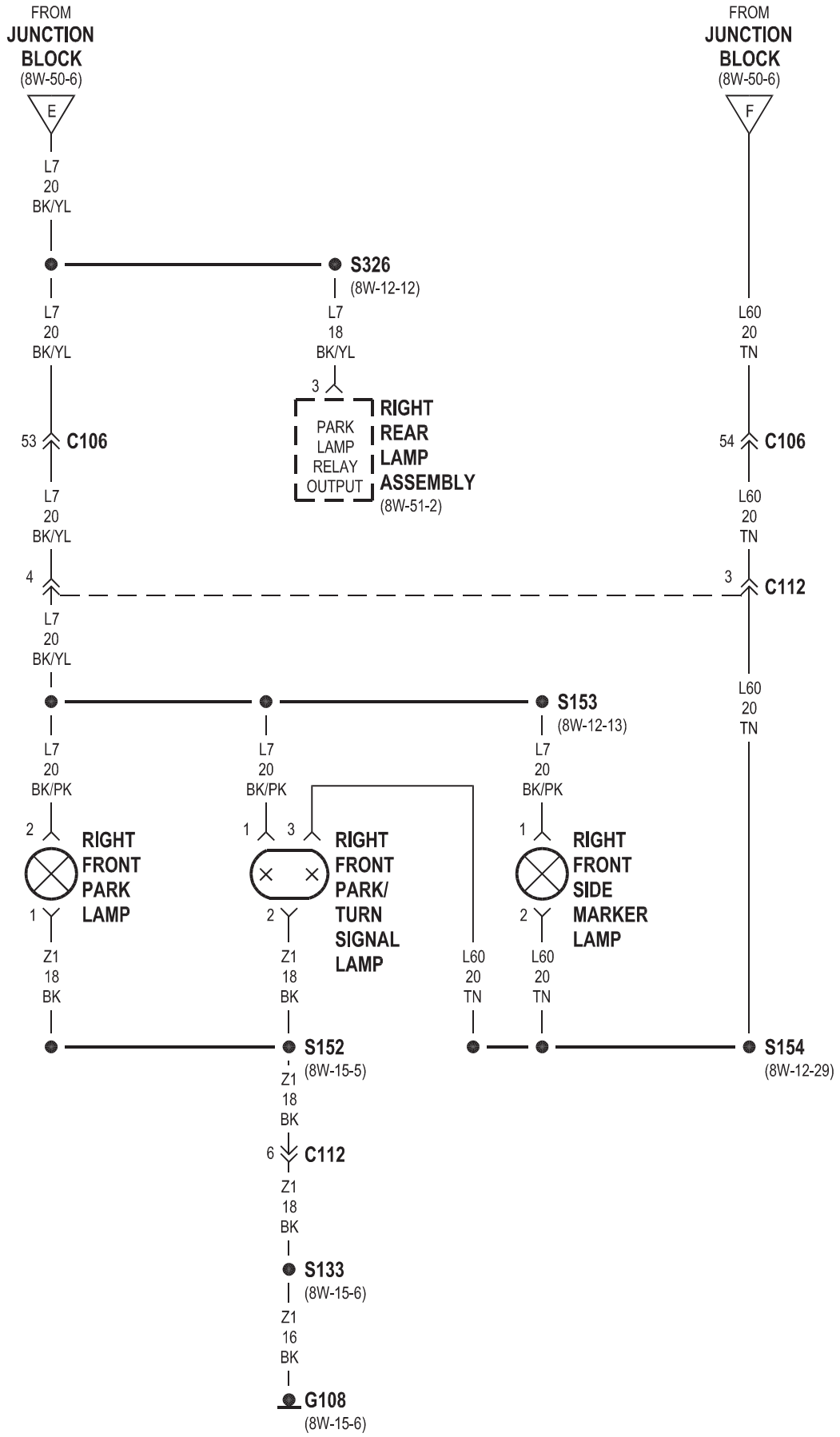
FROM
JUNCTION
BLOCK
(8W-50-6)
E
L7
20
BK/YL
S326
(8W-12-12)
L7
18
BK/YL
3
PARK
LAMP
RELAY
OUTPUT
RIGHT
REAR
LAMP
ASSEMBLY
(8W-51-2)
53
C106
L7
20
BK/YL
4
L7
20
BK/YL
FROM
JUNCTION
BLOCK
(8W-50-6)
F
L60
20
TN
54
C106
L60
20
TN
3
C112
L60
20
TN
S153
(8W-12-13)
L7
20
BK/PK
L7
20
BK/PK
L7
20
BK/PK
2
RIGHT
FRONT
PARK
LAMP
1
Z1
18
BK
1
3
RIGHT
FRONT
PARK/
TURN
SIGNAL
LAMP
2
Z1
18
BK
L60
20
TN
1
RIGHT
FRONT
SIDE
MARKER
LAMP
2
L60
20
TN
S152
(8W-15-5)
Z1
18
BK
6
C112
Z1
18
BK
S133
(8W-15-6)
Z1
16
BK
G108
(8W-15-6)
S154
(8W-12-29)

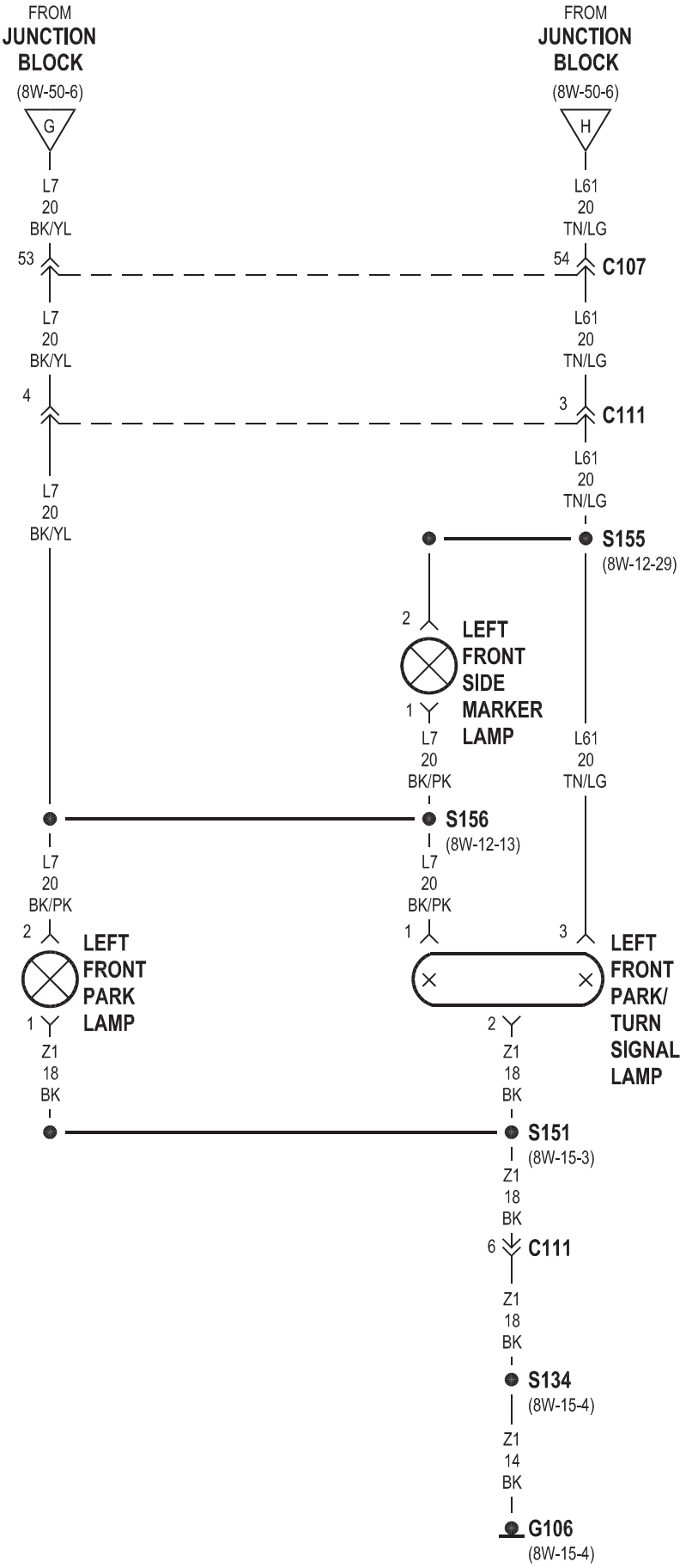
FROM
JUNCTION
BLOCK
(8W-50-6)
G
L7
20
BK/YL
53
FROM
JUNCTION
BLOCK
(8W-50-6)
H
L61
20
TN/LG
54
C107
L7
20
BK/YL
4
L61
20
TN/LG
3
C111
L7
20
BK/YL
L61
20
TN/LG
S155
(8W-12-29)
2
LEFT
FRONT
SIDE
MARKER
LAMP
1
L7
20
BK/PK
L61
20
TN/LG
S156
(8W-12-13)
L7
20
BK/PK
L7
20
BK/PK
2
LEFT
FRONT
PARK
LAMP
1
1
3
LEFT
FRONT
PARK/
TURN
SIGNAL
LAMP
2
Z1
18
BK
Z1
18
BK
S151
(8W-15-3)
Z1
18
BK
6
C111
Z1
18
BK
S134
(8W-15-4)
Z1
14
BK
G106
(8W-15-4)

FOG LAMPS

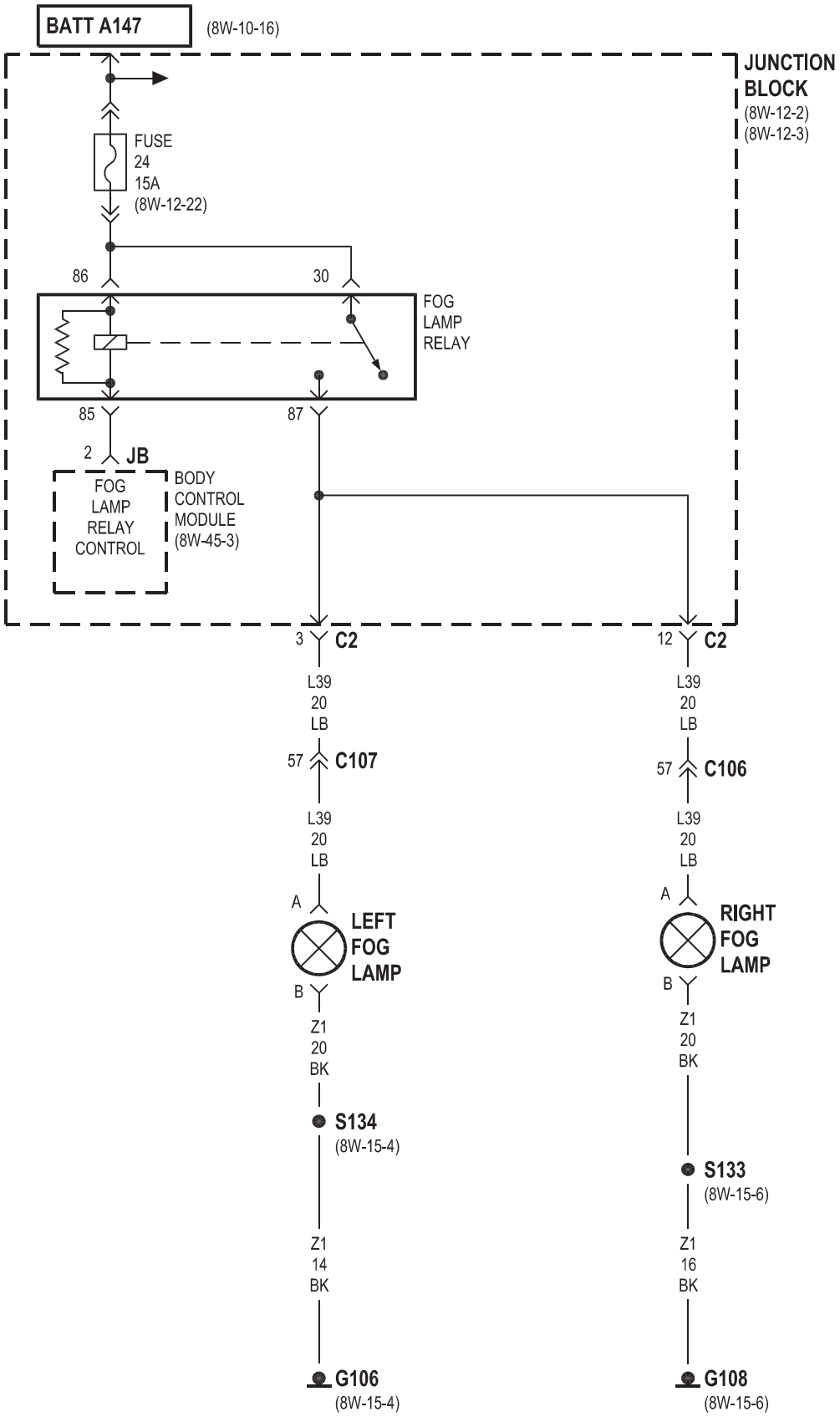
BATT A147
(8W-10-16)
JUNCTION BLOCK
(8W-12-2)
(8W-12-3)
FUSE
24
15A
(8W-12-22)
86
30
FOG LAMP RELAY
85
87
2
JB
FOG LAMP RELAY CONTROL
BODY CONTROL MODULE
(8W-45-3)
3
C2
12
C2
L39
20
LB
57
C107
C106
A
LEFT FOG LAMP
RIGHT FOG LAMP
B
Z1
20
BK
S134
(8W-15-4)
S133
(8W-15-6)
14
16
G106
(8W-15-4)
G108
(8W-15-6)

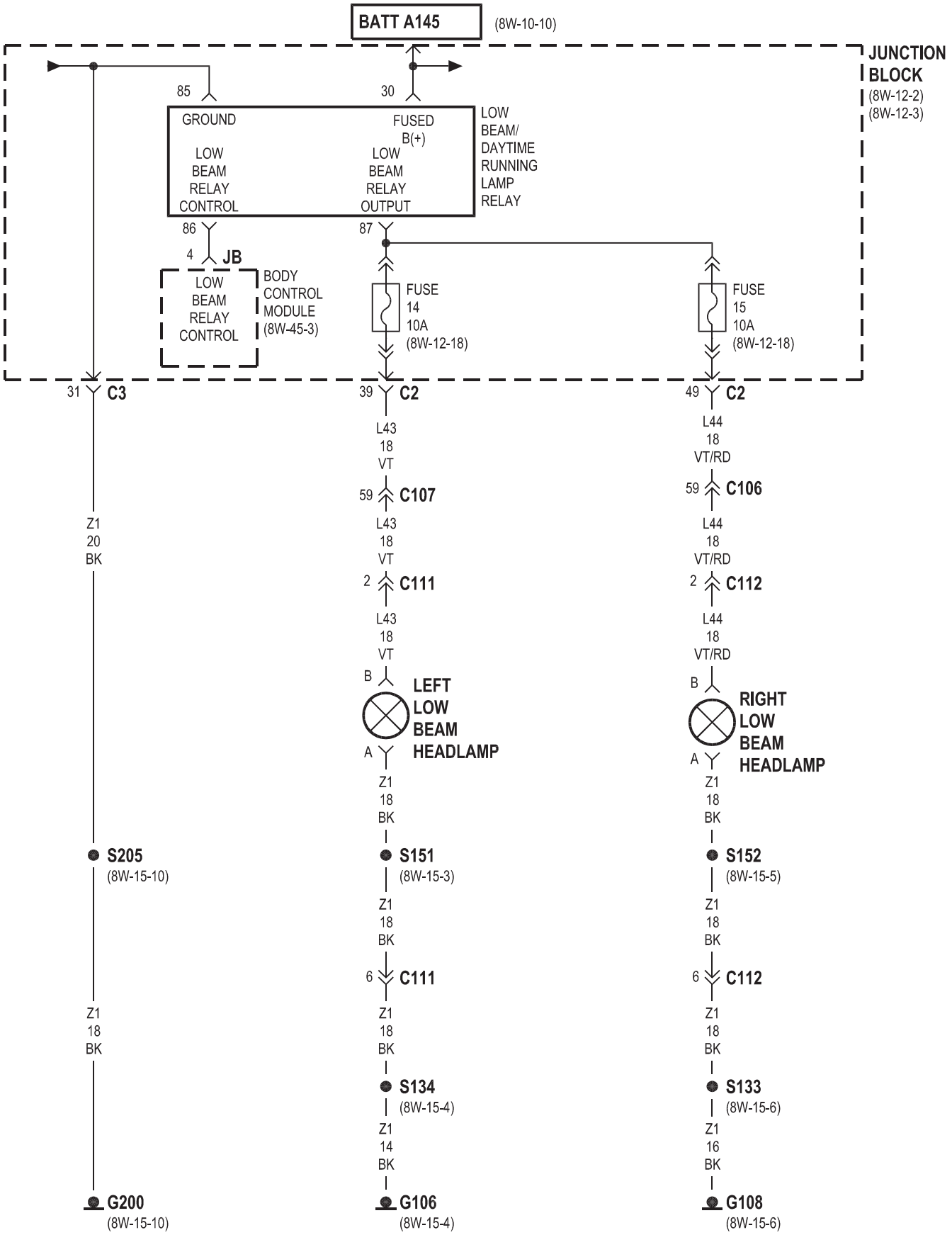
BATT A145
(8W-10-10)
JUNCTION BLOCK
(8W-12-2)
(8W-12-3)
85
30
GROUND
LOW BEAM RELAY CONTROL
FUSED B(+)
LOW BEAM RELAY OUTPUT
LOW BEAM/ DAYTIME RUNNING LAMP RELAY
86
87
4
JB
LOW BEAM RELAY CONTROL
BODY CONTROL MODULE
(8W-45-3)
FUSE 14 10A
(8W-12-18)
FUSE 15 10A
(8W-12-18)
31
C3
39
C2
49
C2
L43 18 VT
L44 18 VT/RD
59
C107
59
C106
Z1 20 BK
L43 18 VT
L44 18 VT/RD
2
C111
2
C112
L43 18 VT
L44 18 VT/RD
B
A
LEFT LOW BEAM HEADLAMP
RIGHT LOW BEAM HEADLAMP
Z1 18 BK
S205
(8W-15-10)
S151
(8W-15-3)
S152
(8W-15-5)
Z1 18 BK
6
C111
6
C112
Z1 18 BK
S134
(8W-15-4)
S133
(8W-15-6)
Z1 14 BK
Z1 16 BK
G200
(8W-15-10)
G106
(8W-15-4)
G108
(8W-15-6)

8W-51 REAR LIGHTING

Component	Page
Automatic Day/Night Mirror	8W-51-5
Body Control Module	8W-51-2
Brake Lamp Switch	8W-51-4
Center High Mounted Stop Lamp	8W-51-4
Controller Antilock Brake	8W-51-4
Electric Brake	8W-51-4
Fuse 6 (JB)	8W-51-2
Fuse 23 (JB)	8W-51-4
G200	8W-51-2
G300	8W-51-2, 4, 5
G301	8W-51-2, 3, 4, 5
Junction Block	8W-51-2, 4
Left Rear Lamp Assembly	8W-51-2, 4, 5
License Lamp No. 1	8W-51-3
License Lamp No. 2	8W-51-3
Park Lamp Relay	8W-51-2
Park/Neutral Position Switch	8W-51-5
Right Rear Lamp Assembly	8W-51-2, 4, 5
Trailer Tow Brake Lamp Relay	8W-51-4
Trailer Tow Connector	8W-51-5
Transmission Solenoid/TRS Assembly	8W-51-5

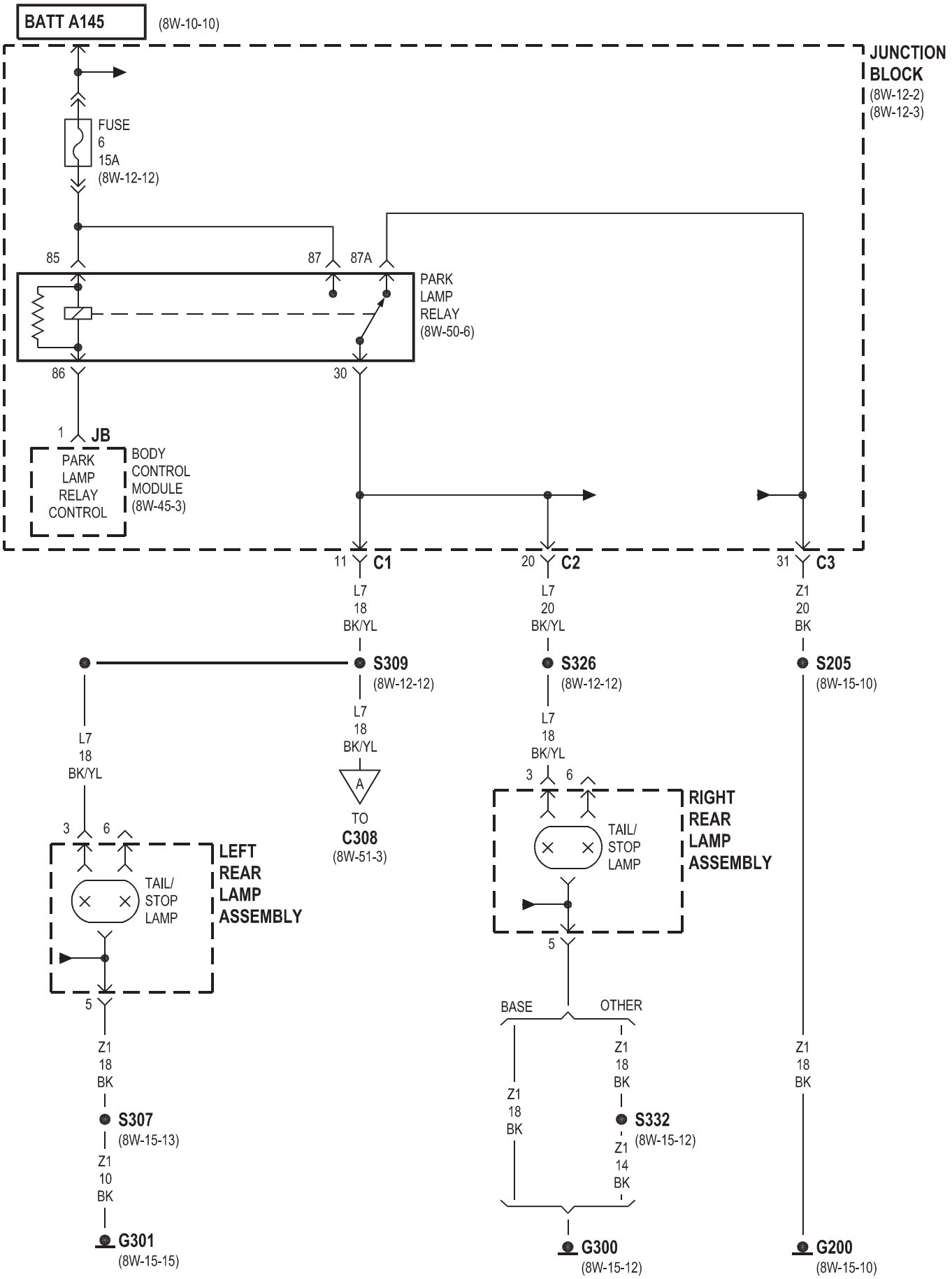
BATT A145
(8W-10-10)
JUNCTION BLOCK
(8W-12-2)
(8W-12-3)
FUSE
6
15A
(8W-12-12)
85
87
87A
PARK LAMP RELAY
(8W-50-6)
86
30
1
JB
PARK LAMP RELAY CONTROL
BODY CONTROL MODULE
(8W-45-3)
11
C1
20
C2
31
C3
L7
18
BK/YL
L7
20
BK/YL
Z1
20
BK
S309
(8W-12-12)
S326
(8W-12-12)
S205
(8W-15-10)
L7
18
BK/YL
L7
18
BK/YL
A
TO
C308
(8W-51-3)
L7
18
BK/YL
3
6
TAIL/ STOP LAMP
LEFT REAR LAMP ASSEMBLY
3
6
TAIL/ STOP LAMP
RIGHT REAR LAMP ASSEMBLY
5
5
BASE
OTHER
Z1
18
BK
Z1
18
BK
Z1
18
BK
S307
(8W-15-13)
S332
(8W-15-12)
Z1
14
BK
Z1
10
BK
G301
(8W-15-15)
G300
(8W-15-12)
G200
(8W-15-10)

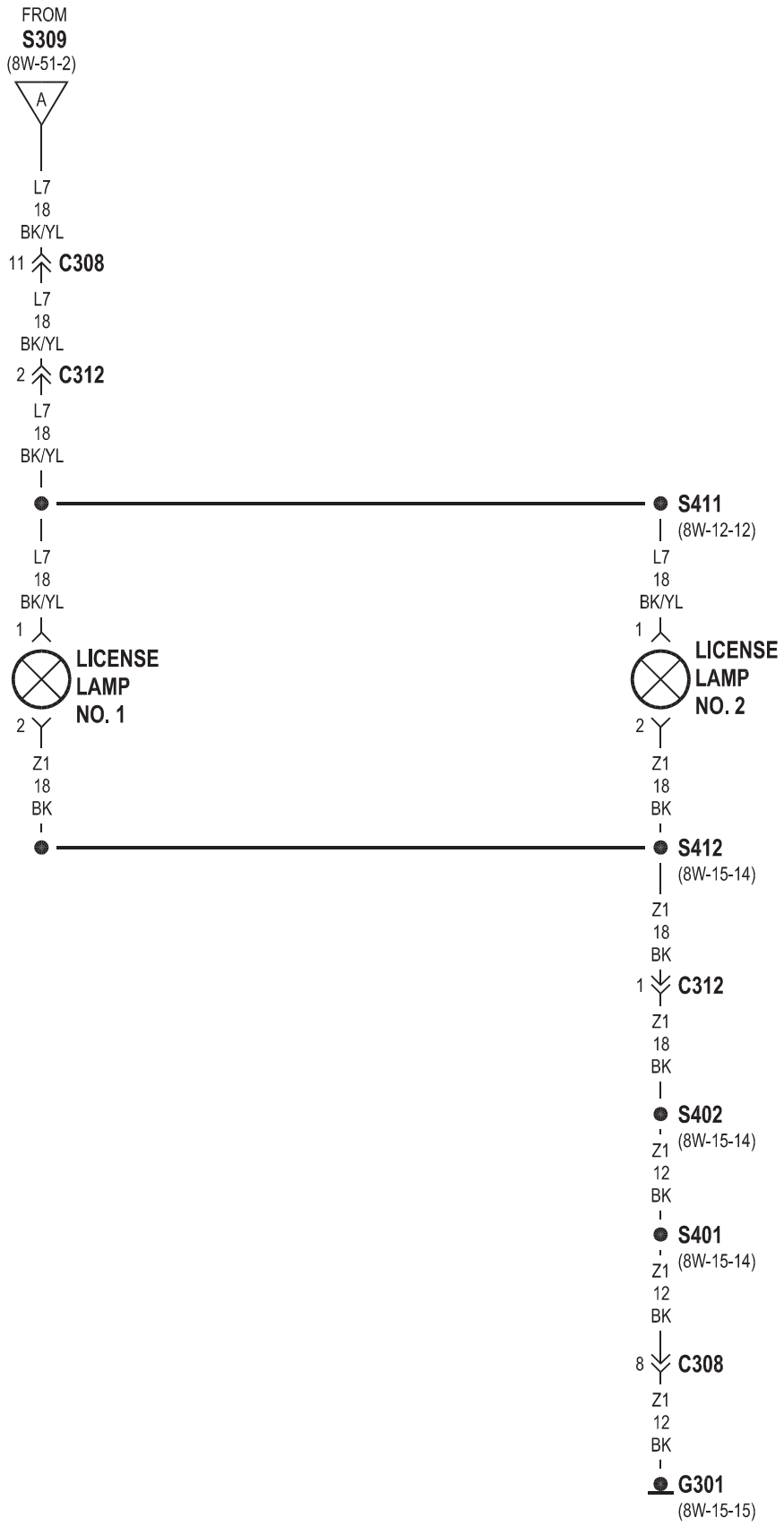
FROM
S309
(8W-51-2)
A
L7
18
BK/YL
11
C308
L7
18
BK/YL
2
C312
L7
18
BK/YL
S411
(8W-12-12)
L7
18
BK/YL
1
LICENSE
LAMP
NO. 1
2
Z1
18
BK
L7
18
BK/YL
1
LICENSE
LAMP
NO. 2
2
Z1
18
BK
S412
(8W-15-14)
Z1
18
BK
1
C312
Z1
18
BK
S402
(8W-15-14)
Z1
12
BK
S401
(8W-15-14)
Z1
12
BK
8
C308
Z1
12
BK
G301
(8W-15-15)

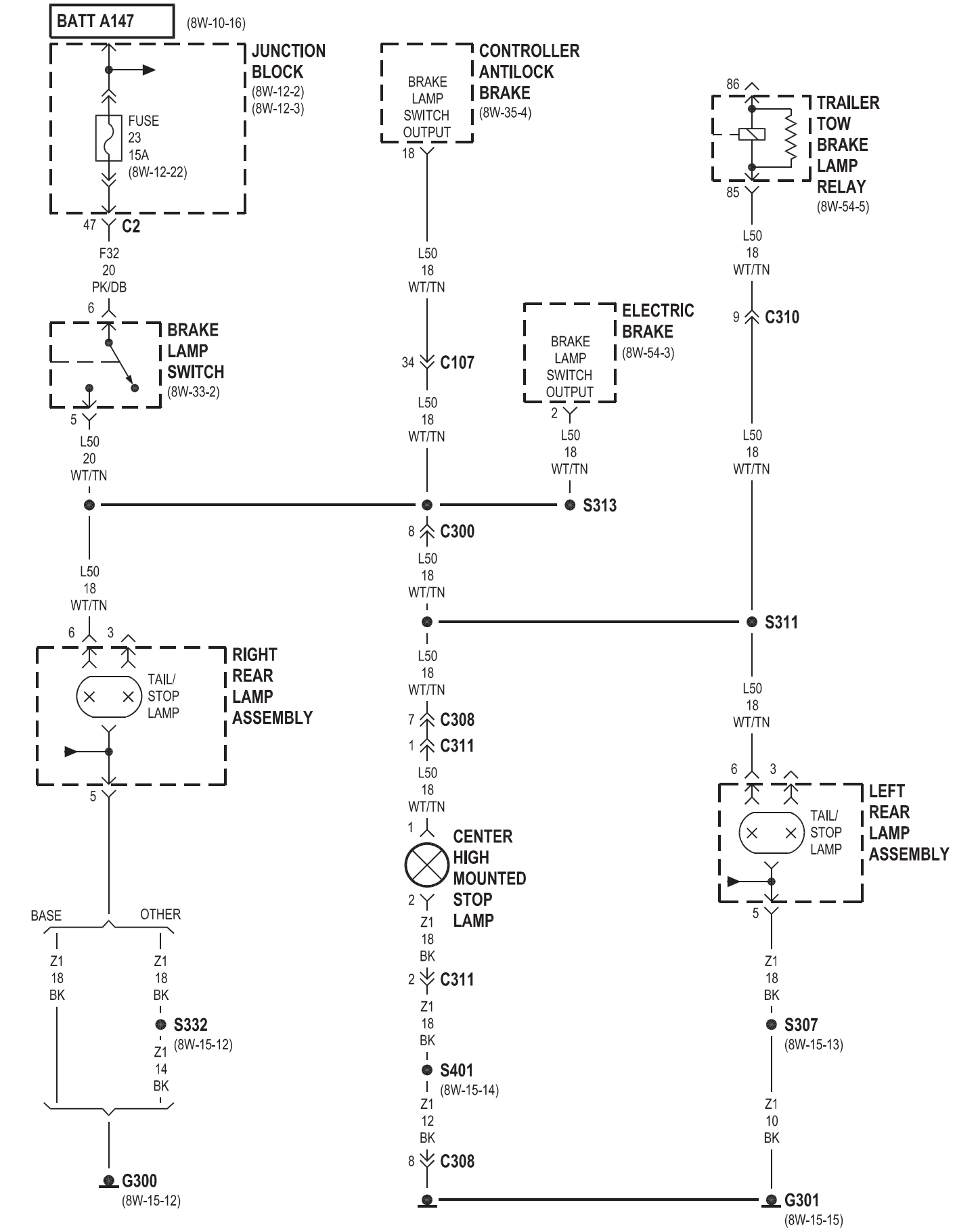
BATT A147
(8W-10-16)
JUNCTION BLOCK
(8W-12-2)
(8W-12-3)
FUSE 23 15A
(8W-12-22)
47
C2
F32 20 PK/DB
6
BRAKE LAMP SWITCH
(8W-33-2)
5
L50 20 WT/TN
CONTROLLER ANTILOCK BRAKE
(8W-35-4)
BRAKE LAMP SWITCH OUTPUT
18
L50 18 WT/TN
34
C107
L50 18 WT/TN
ELECTRIC BRAKE
(8W-54-3)
BRAKE LAMP SWITCH OUTPUT
2
L50 18 WT/TN
S313
8
C300
L50 18 WT/TN
86
TRAILER TOW BRAKE LAMP RELAY
(8W-54-5)
85
L50 18 WT/TN
9
C310
L50 18 WT/TN
S311
L50 18 WT/TN
6
3
RIGHT REAR LAMP ASSEMBLY
TAIL/ STOP LAMP
5
L50 18 WT/TN
7
C308
1
C311
L50 18 WT/TN
1
CENTER HIGH MOUNTED STOP LAMP
2
Z1 18 BK
2
C311
Z1 18 BK
S401
(8W-15-14)
Z1 12 BK
8
C308
L50 18 WT/TN
6
3
LEFT REAR LAMP ASSEMBLY
TAIL/ STOP LAMP
5
Z1 18 BK
S307
(8W-15-13)
Z1 10 BK
G301
(8W-15-15)
BASE
OTHER
Z1 18 BK
Z1 18 BK
S332
(8W-15-12)
Z1 14 BK
G300
(8W-15-12)

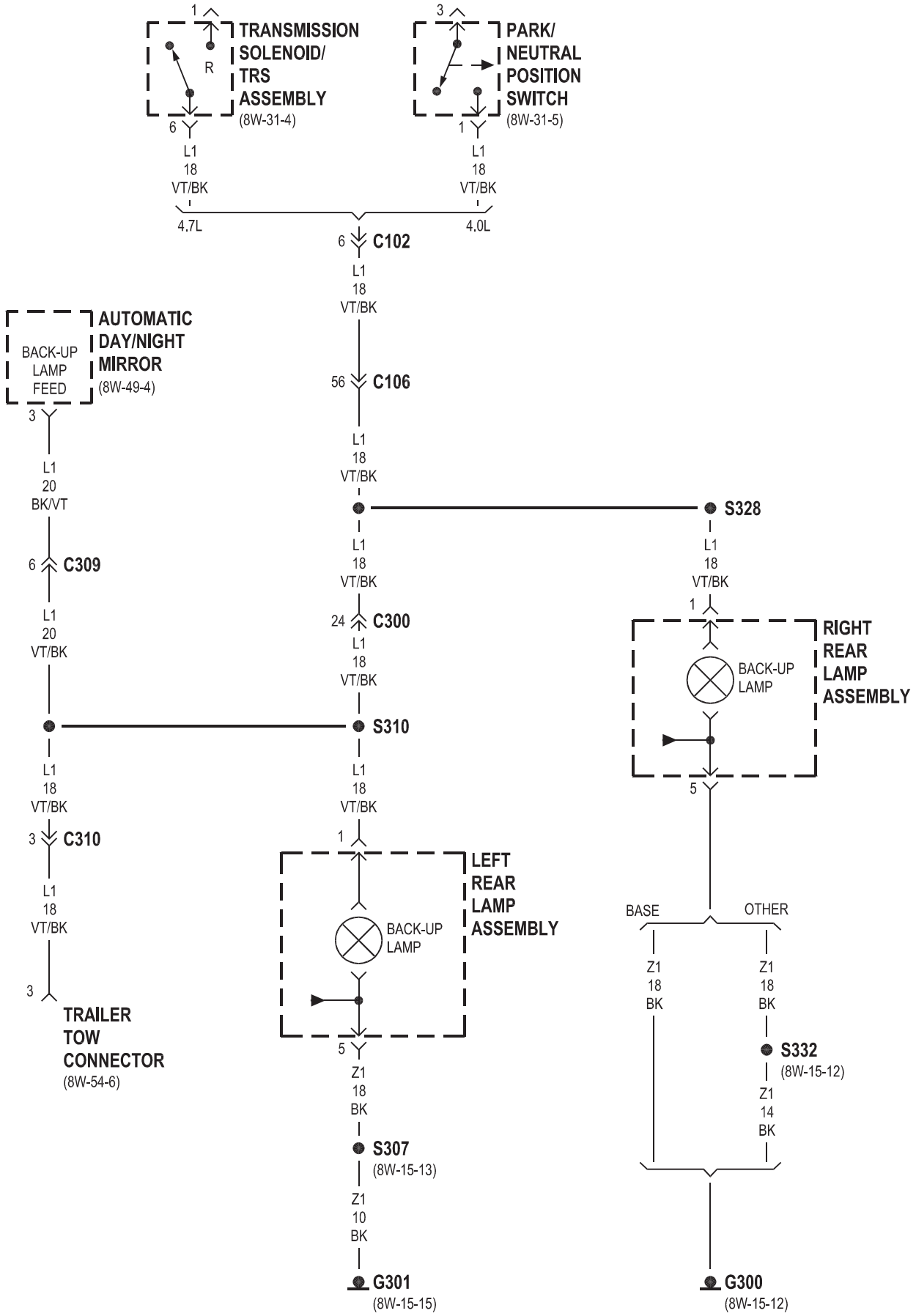
TRANSMISSION SOLENOID/ TRS ASSEMBLY
(8W-31-4)
PARK/ NEUTRAL POSITION SWITCH
(8W-31-5)
L1 18 VT/BK
4.7L
4.0L
C102
C106
AUTOMATIC DAY/NIGHT MIRROR
(8W-49-4)
BACK-UP LAMP FEED
L1 20 BK/VT
C309
L1 20 VT/BK
S328
C300
S310
C310
TRAILER TOW CONNECTOR
(8W-54-6)
RIGHT REAR LAMP ASSEMBLY
BACK-UP LAMP
LEFT REAR LAMP ASSEMBLY
BASE
OTHER
Z1 18 BK
Z1 14 BK
S332
(8W-15-12)
S307
(8W-15-13)
Z1 10 BK
G301
(8W-15-15)
G300
(8W-15-12)

8W-52 TURN SIGNALS

Component	Page
Body Control Module	8W-52-3, 5
Combination Flasher	8W-52-2, 3, 5, 7
Fuse 4 (JB)	8W-52-2
Fuse 6 (JB)	8W-52-3, 5
Fuse 20 (JB)	8W-52-2
G106	8W-52-6
G108	8W-52-4
G200	8W-52-2, 3, 5
G300	8W-52-7
G301	8W-52-7
Instrument Cluster	8W-52-3, 5
Junction Block	8W-52-2, 3, 5, 7
Left Front Park Lamp	8W-52-6
Left Front Park/Turn Signal Lamp	8W-52-6
Left Front Side Marker Lamp	8W-52-6
Left Multi-Function Switch	8W-52-2
Left Rear Lamp Assembly	8W-52-7
Park Lamp Relay	8W-52-3, 5
Right Front Park Lamp	8W-52-4
Right Front Park/Turn Signal Lamp	8W-52-4
Right Front Side Marker Lamp	8W-52-4
Right Rear Lamp Assembly	8W-52-7
Trailer Tow Left Turn Relay	8W-52-7
Trailer Tow Right Turn Relay	8W-52-7

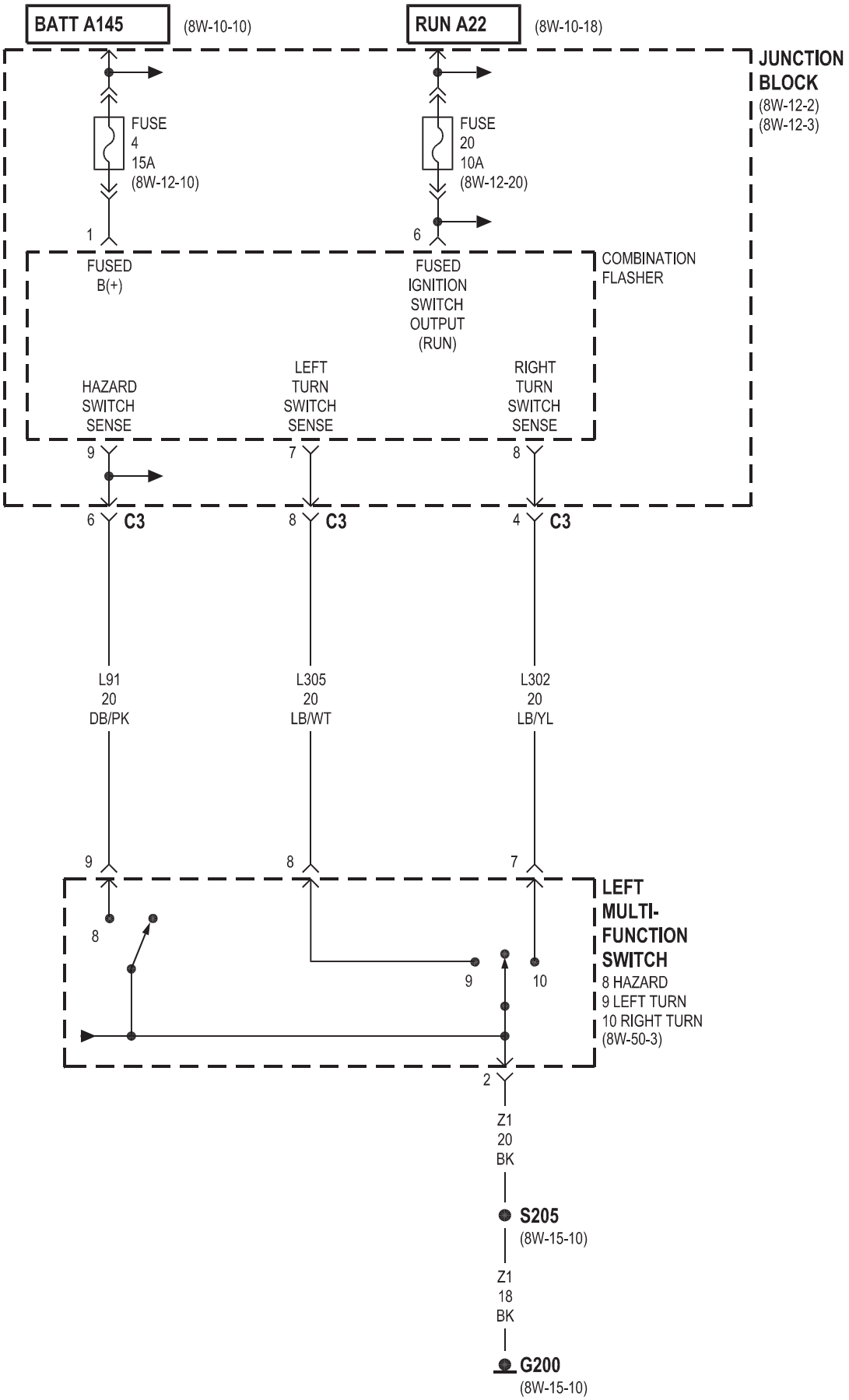
BATT A145
(8W-10-10)
RUN A22
(8W-10-18)
JUNCTION BLOCK
(8W-12-2)
(8W-12-3)
FUSE
4
15A
(8W-12-10)
FUSE
20
10A
(8W-12-20)
1
6
FUSED B(+)
FUSED IGNITION SWITCH OUTPUT (RUN)
COMBINATION FLASHER
HAZARD SWITCH SENSE
LEFT TURN SWITCH SENSE
RIGHT TURN SWITCH SENSE
9
7
8
6 C3
8 C3
4 C3
L91
20
DB/PK
L305
20
LB/WT
L302
20
LB/YL
9
8
7
8
9
10
LEFT MULTI-FUNCTION SWITCH
8 HAZARD
9 LEFT TURN
10 RIGHT TURN
(8W-50-3)
2
Z1
20
BK
S205
(8W-15-10)
Z1
18
BK
G200
(8W-15-10)

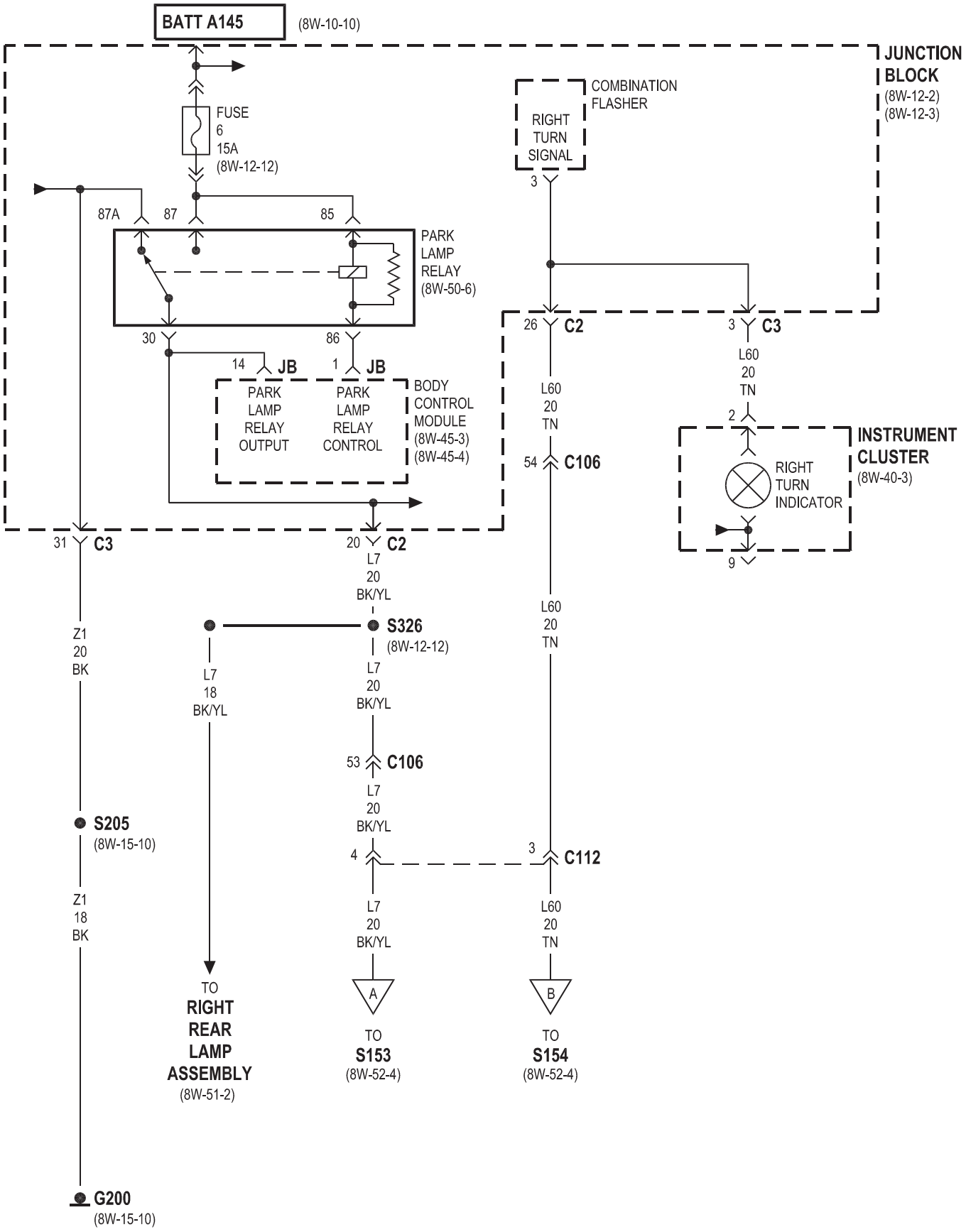
BATT A145
(8W-10-10)
JUNCTION BLOCK
(8W-12-2)
(8W-12-3)
FUSE
6
15A
(8W-12-12)
COMBINATION FLASHER
RIGHT TURN SIGNAL
3
87A
87
85
PARK LAMP RELAY
(8W-50-6)
30
86
14
JB
1
JB
PARK LAMP RELAY OUTPUT
PARK LAMP RELAY CONTROL
BODY CONTROL MODULE
(8W-45-3)
(8W-45-4)
26
C2
3
C3
L60
20
TN
2
INSTRUMENT CLUSTER
(8W-40-3)
RIGHT TURN INDICATOR
9
54
C106
31
C3
20
C2
L7
20
BK/YL
S326
(8W-12-12)
Z1
20
BK
L7
18
BK/YL
L7
20
BK/YL
53
C106
L7
20
BK/YL
S205
(8W-15-10)
4
3
C112
Z1
18
BK
L7
20
BK/YL
L60
20
TN
A
B
TO
RIGHT REAR LAMP ASSEMBLY
(8W-51-2)
TO
S153
(8W-52-4)
TO
S154
(8W-52-4)
G200
(8W-15-10)

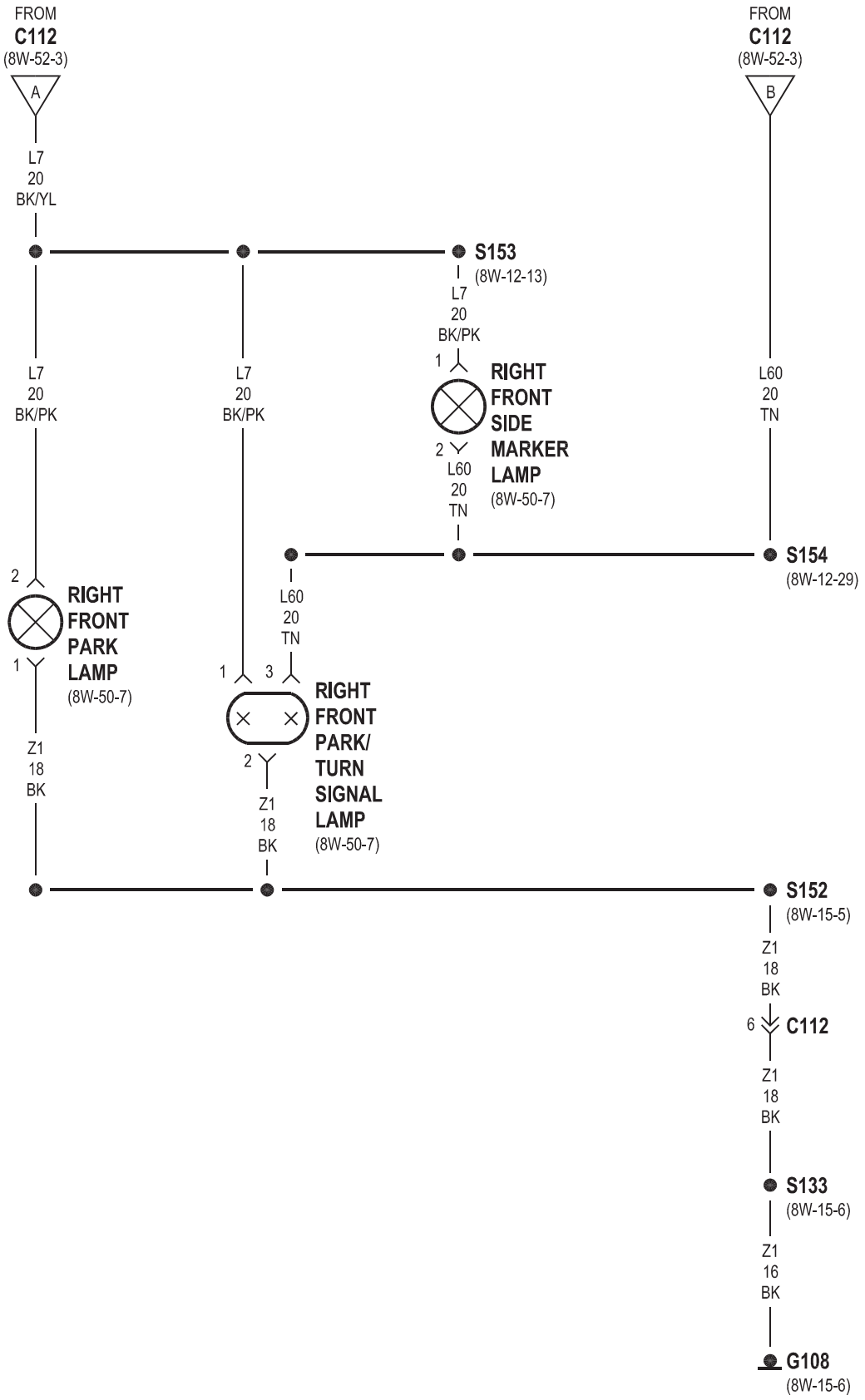
FROM
C112
(8W-52-3)
A
L7
20
BK/YL
FROM
C112
(8W-52-3)
B
S153
(8W-12-13)
L7
20
BK/PK
1
RIGHT
FRONT
SIDE
MARKER
LAMP
(8W-50-7)
2
L60
20
TN
L7
20
BK/PK
L7
20
BK/PK
L60
20
TN
S154
(8W-12-29)
L60
20
TN
2
RIGHT
FRONT
PARK
LAMP
(8W-50-7)
1
1
3
RIGHT
FRONT
PARK/
TURN
SIGNAL
LAMP
(8W-50-7)
2
Z1
18
BK
Z1
18
BK
S152
(8W-15-5)
Z1
18
BK
6
C112
Z1
18
BK
S133
(8W-15-6)
Z1
16
BK
G108
(8W-15-6)

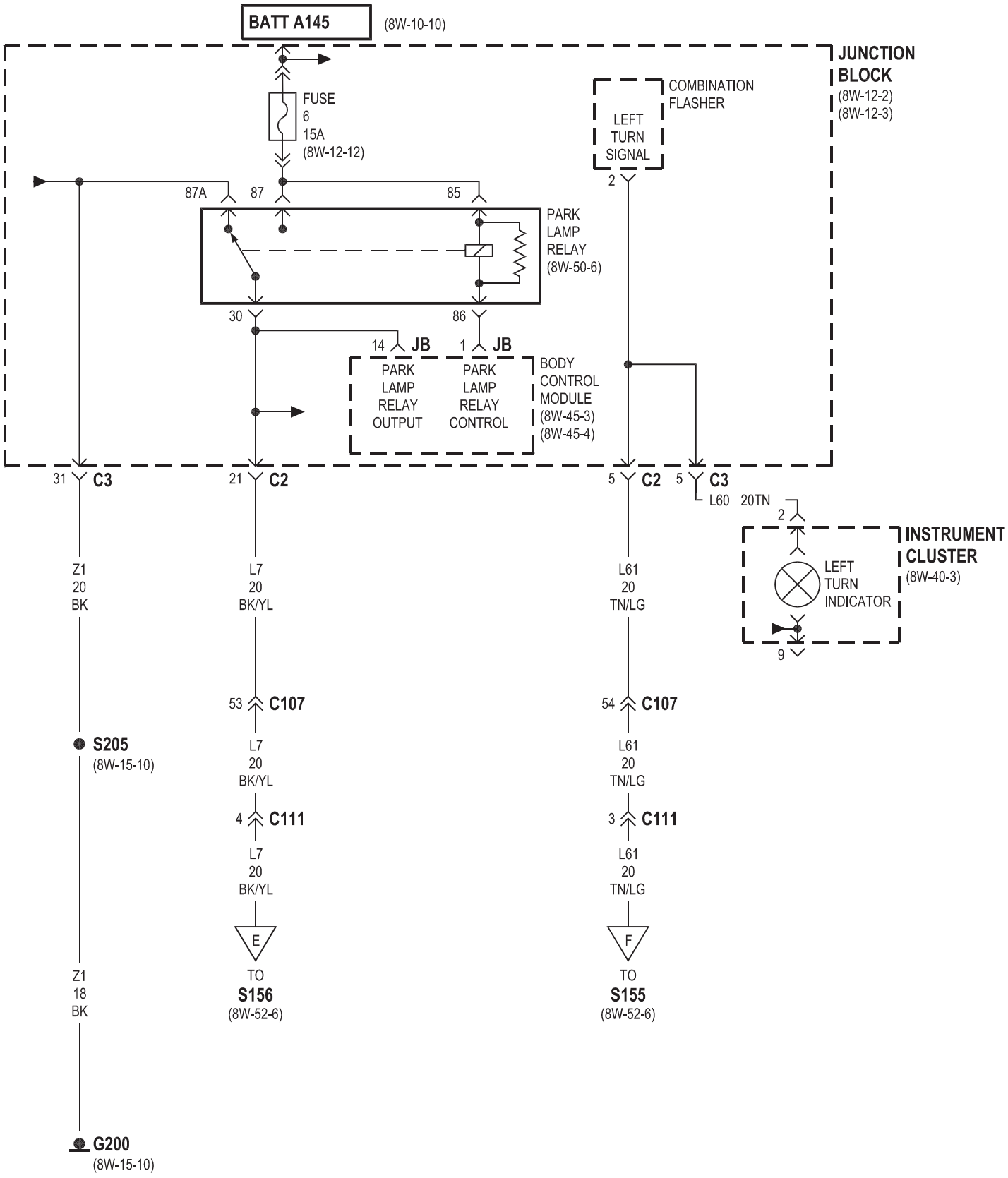
BATT A145
(8W-10-10)
JUNCTION BLOCK
(8W-12-2)
(8W-12-3)
FUSE
6
15A
(8W-12-12)
COMBINATION FLASHER
LEFT TURN SIGNAL
2
87A
87
85
PARK LAMP RELAY
(8W-50-6)
30
86
14 JB
1 JB
PARK LAMP RELAY OUTPUT
PARK LAMP RELAY CONTROL
BODY CONTROL MODULE
(8W-45-3)
(8W-45-4)
31 C3
21 C2
5 C2
5 C3
L60 20TN
2
INSTRUMENT CLUSTER
(8W-40-3)
LEFT TURN INDICATOR
9
Z1
20
BK
L7
20
BK/YL
L61
20
TN/LG
53 C107
54 C107
S205
(8W-15-10)
L7
20
BK/YL
L61
20
TN/LG
4 C111
3 C111
L7
20
BK/YL
L61
20
TN/LG
E
F
TO
S156
(8W-52-6)
TO
S155
(8W-52-6)
Z1
18
BK
G200
(8W-15-10)

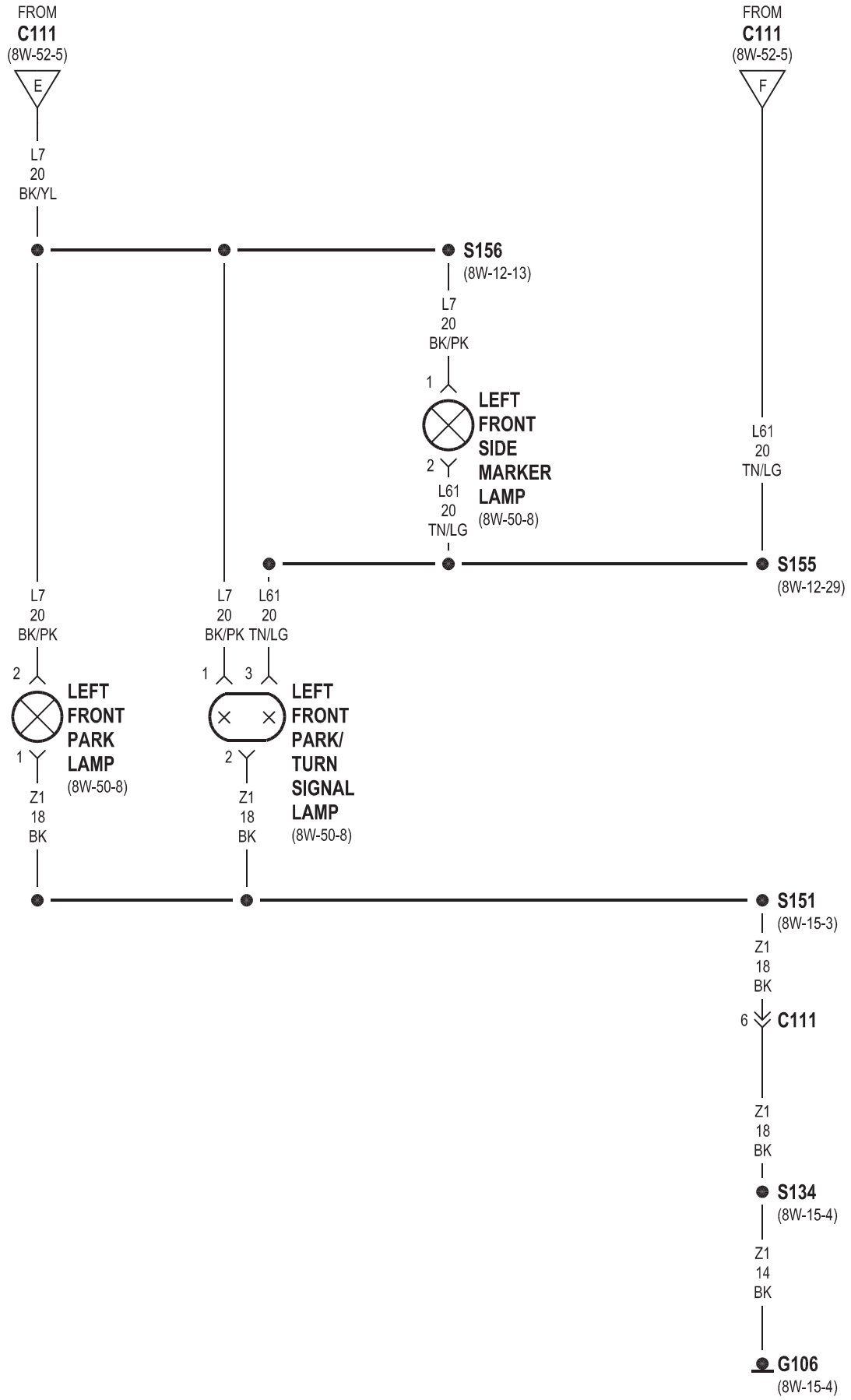
FROM
C111
(8W-52-5)
E
L7
20
BK/YL
FROM
C111
(8W-52-5)
F
S156
(8W-12-13)
L7
20
BK/PK
1
LEFT
FRONT
SIDE
MARKER
LAMP
(8W-50-8)
2
L61
20
TN/LG
L61
20
TN/LG
S155
(8W-12-29)
L7
20
BK/PK
L7
20
BK/PK
L61
20
TN/LG
2
1
LEFT
FRONT
PARK
LAMP
(8W-50-8)
1
3
2
LEFT
FRONT
PARK/
TURN
SIGNAL
LAMP
(8W-50-8)
Z1
18
BK
Z1
18
BK
S151
(8W-15-3)
Z1
18
BK
6
C111
Z1
18
BK
S134
(8W-15-4)
Z1
14
BK
G106
(8W-15-4)

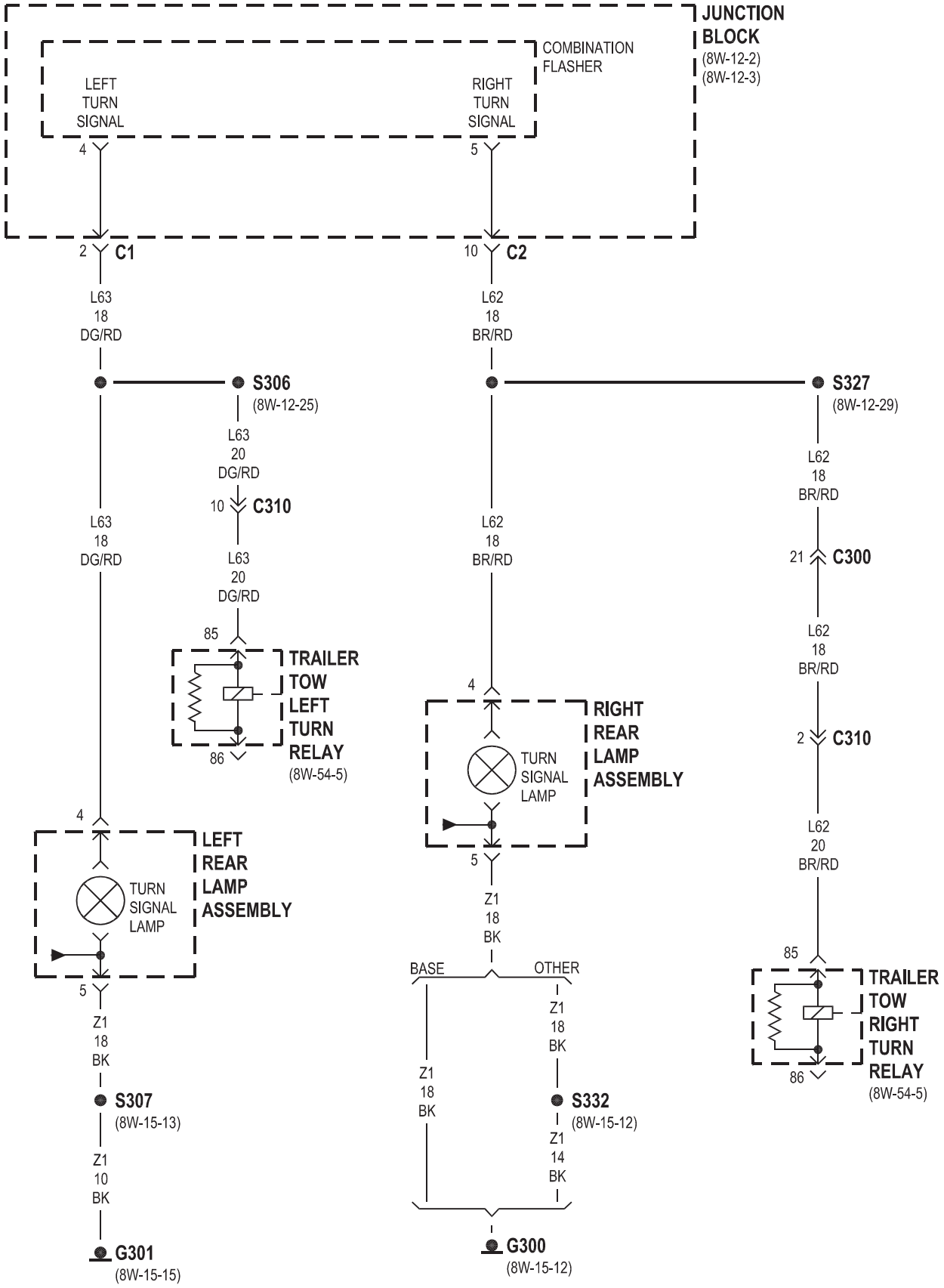
JUNCTION BLOCK
(8W-12-2)
(8W-12-3)
COMBINATION FLASHER
LEFT TURN SIGNAL
RIGHT TURN SIGNAL
4
5
2
C1
10
C2
L63
18
DG/RD
L62
18
BR/RD
S306
(8W-12-25)
S327
(8W-12-29)
L63
20
DG/RD
10
C310
L62
18
BR/RD
21
C300
85
TRAILER TOW LEFT TURN RELAY
(8W-54-5)
86
RIGHT REAR LAMP ASSEMBLY
TURN SIGNAL LAMP
LEFT REAR LAMP ASSEMBLY
Z1
18
BK
BASE
OTHER
Z1
10
BK
S307
(8W-15-13)
S332
(8W-15-12)
Z1
14
BK
G301
(8W-15-15)
G300
(8W-15-12)
TRAILER TOW RIGHT TURN RELAY
(8W-54-5)

8W-53 WIPERS

Component	Page
Body Control Module	8W-53-2, 3, 4
Circuit Breaker No. 1 (JB)	8W-53-3
Front Washer Pump	8W-53-2
Front Wiper Motor	8W-53-3
Fuse 8 (JB)	8W-53-4
Fuse 29 (JB)	8W-53-2
G106	8W-53-2, 3, 4
G108	8W-53-3
G301	8W-53-4
Junction Block	8W-53-2, 3, 4
Rear Washer Pump	8W-53-4
Rear Wiper Motor	8W-53-4
Right Multi-Function Switch	8W-53-2, 3, 4
Washer Fluid Level Switch	8W-53-2
Wiper High/Low Relay	8W-53-2, 3
Wiper On/Off Relay	8W-53-3

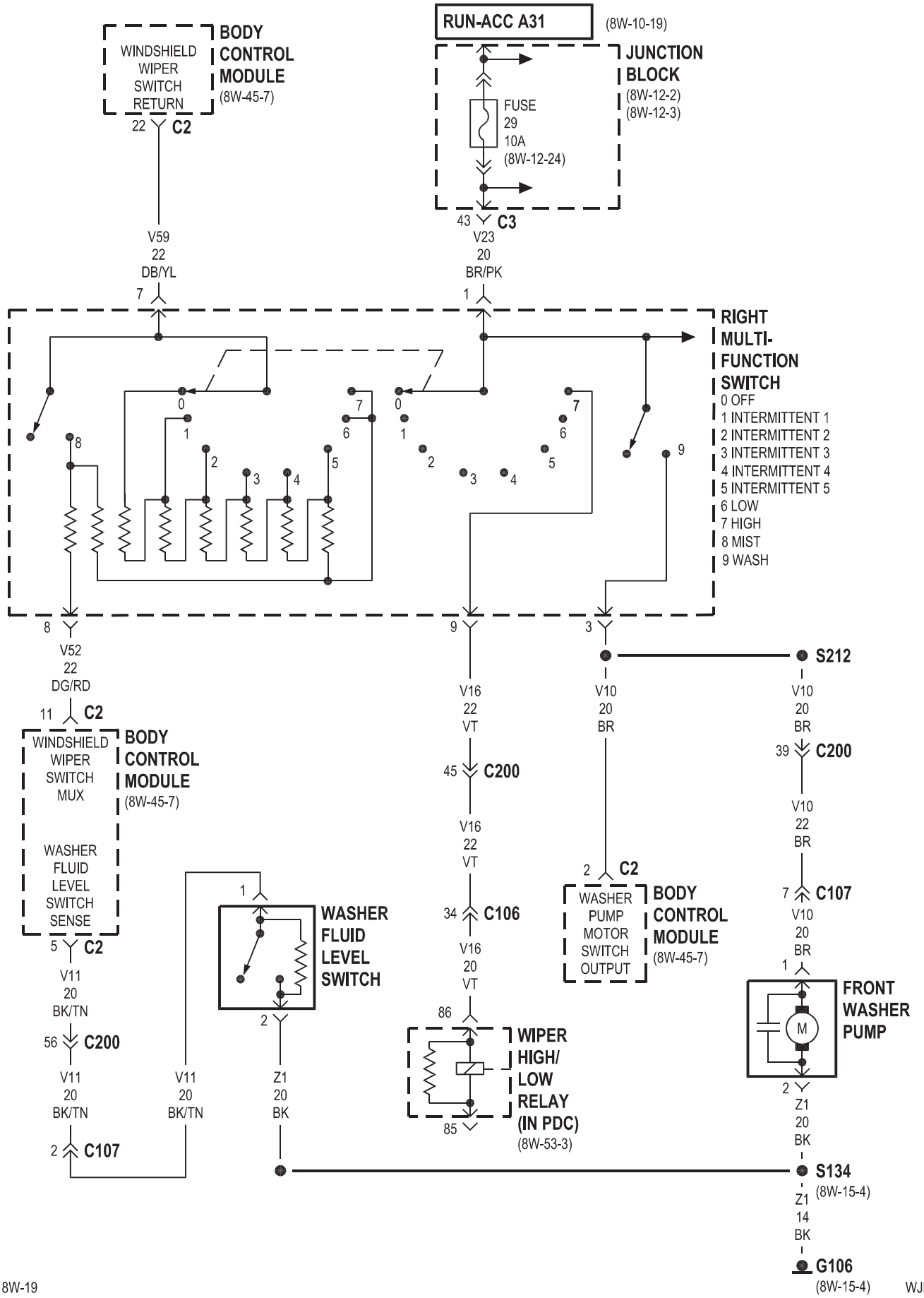
WINDSHIELD WIPER SWITCH RETURN
BODY CONTROL MODULE
(8W-45-7)
22 C2
RUN-ACC A31
(8W-10-19)
JUNCTION BLOCK
(8W-12-2)
(8W-12-3)
FUSE 29 10A
(8W-12-24)
43 C3
V59 22 DB/YL
V23 20 BR/PK
7
1
RIGHT MULTI-FUNCTION SWITCH
0 OFF
1 INTERMITTENT 1
2 INTERMITTENT 2
3 INTERMITTENT 3
4 INTERMITTENT 4
5 INTERMITTENT 5
6 LOW
7 HIGH
8 MIST
9 WASH
8
9
3
V52 22 DG/RD
S212
V16 22 VT
V10 20 BR
V10 20 BR
11 C2
WINDSHIELD WIPER SWITCH MUX
WASHER FLUID LEVEL SWITCH SENSE
BODY CONTROL MODULE
(8W-45-7)
45 C200
39 C200
V16 22 VT
V10 22 BR
2 C2
WASHER PUMP MOTOR SWITCH OUTPUT
BODY CONTROL MODULE
(8W-45-7)
7 C107
34 C106
V10 20 BR
WASHER FLUID LEVEL SWITCH
5 C2
V16 20 VT
1
V11 20 BK/TN
86
FRONT WASHER PUMP
M
56 C200
WIPER HIGH/ LOW RELAY (IN PDC)
(8W-53-3)
V11 20 BK/TN
V11 20 BK/TN
Z1 20 BK
85
2
Z1 20 BK
2 C107
S134
(8W-15-4)
Z1 14 BK
G106
(8W-15-4)

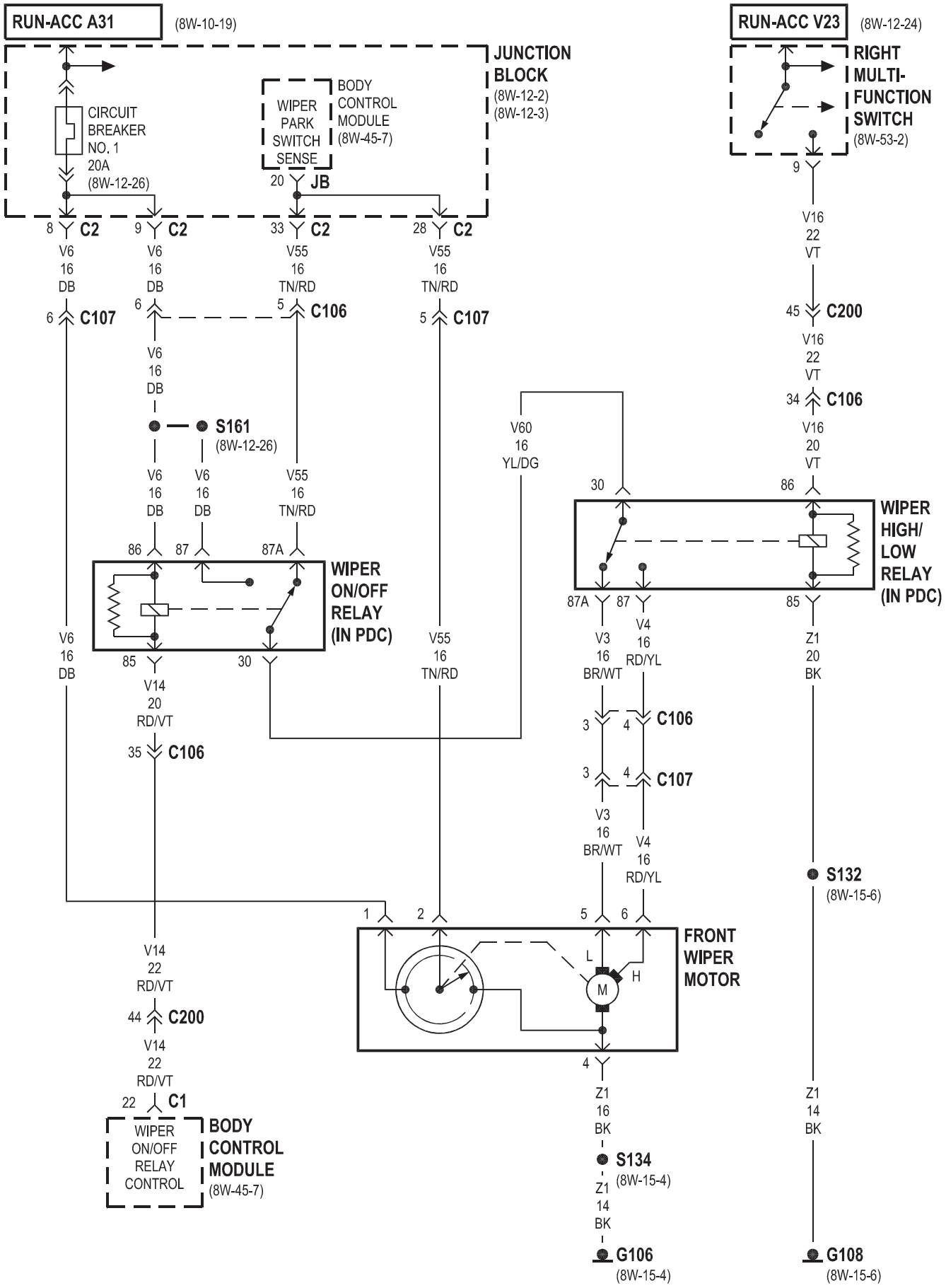
RUN-ACC A31
(8W-10-19)
JUNCTION BLOCK
(8W-12-2)
(8W-12-3)
CIRCUIT BREAKER NO. 1 20A
(8W-12-26)
WIPER PARK SWITCH SENSE
BODY CONTROL MODULE
(8W-45-7)
20 JB
8 C2
9 C2
33 C2
28 C2
V6 16 DB
V55 16 TN/RD
6 C107
6
5 C106
5 C107
S161
(8W-12-26)
V60 16 YL/DG
86
87
87A
WIPER ON/OFF RELAY (IN PDC)
85
30
V14 20 RD/VT
35 C106
V14 22 RD/VT
44 C200
22 C1
WIPER ON/OFF RELAY CONTROL
BODY CONTROL MODULE
(8W-45-7)
RUN-ACC V23
(8W-12-24)
RIGHT MULTI-FUNCTION SWITCH
(8W-53-2)
9
V16 22 VT
45 C200
34 C106
V16 20 VT
WIPER HIGH/ LOW RELAY (IN PDC)
V3 16 BR/WT
V4 16 RD/YL
Z1 20 BK
3
4 C106
3
4 C107
S132
(8W-15-6)
1
2
5
6
L
H
M
FRONT WIPER MOTOR
4
Z1 16 BK
S134
(8W-15-4)
Z1 14 BK
G106
(8W-15-4)
Z1 14 BK
G108
(8W-15-6)

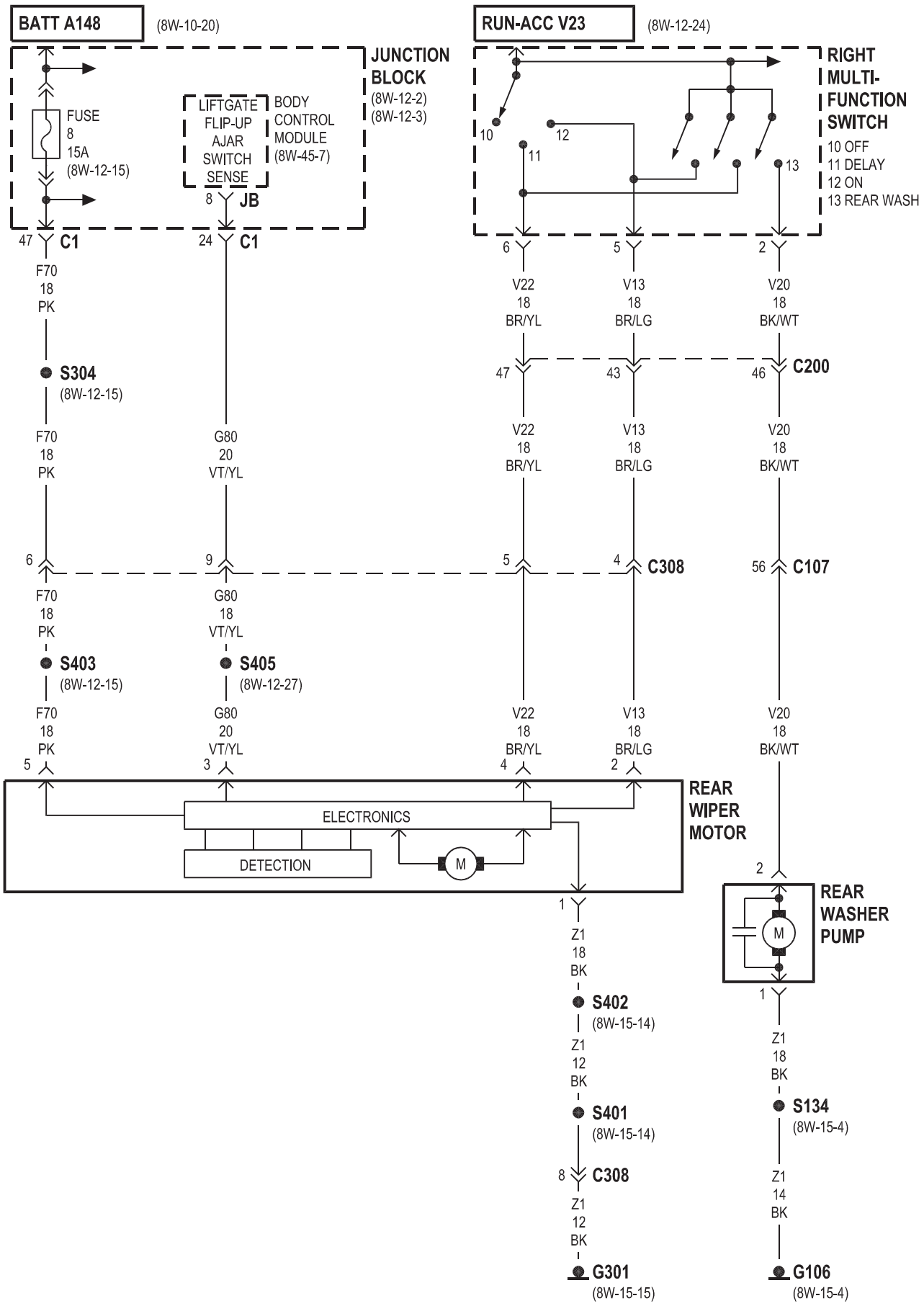
BATT A148
(8W-10-20)
RUN-ACC V23
(8W-12-24)
JUNCTION BLOCK
(8W-12-2)
(8W-12-3)
FUSE 8 15A (8W-12-15)
LIFTGATE FLIP-UP AJAR SWITCH SENSE
BODY CONTROL MODULE (8W-45-7)
8 JB
RIGHT MULTI-FUNCTION SWITCH
10 OFF
11 DELAY
12 ON
13 REAR WASH
47 C1
24 C1
6
5
2
F70 18 PK
V22 18 BR/YL
V13 18 BR/LG
V20 18 BK/WT
S304
(8W-12-15)
47
43
46 C200
F70 18 PK
G80 20 VT/YL
V22 18 BR/YL
V13 18 BR/LG
V20 18 BK/WT
6
9
5
4 C308
56 C107
F70 18 PK
G80 18 VT/YL
S403
(8W-12-15)
S405
(8W-12-27)
F70 18 PK
G80 20 VT/YL
V22 18 BR/YL
V13 18 BR/LG
V20 18 BK/WT
5
3
4
2
REAR WIPER MOTOR
ELECTRONICS
DETECTION
M
2
REAR WASHER PUMP
M
1
Z1 18 BK
S402
(8W-15-14)
Z1 12 BK
S401
(8W-15-14)
8 C308
Z1 12 BK
G301
(8W-15-15)
1
Z1 18 BK
S134
(8W-15-4)
Z1 14 BK
G106
(8W-15-4)

8W-54 TRAILER TOW

Component	Page
Body Control Module	8W-54-2
Brake Lamp Switch	8W-54-3, 4
Cigar Lighter Relay	8W-54-6
Circuit Breaker	8W-54-6
Combination Flasher	8W-54-4
Electric Brake	8W-54-3, 4
Fuse 6 (JB)	8W-54-2
Fuse 18 (JB)	8W-54-4
Fuse 23 (JB)	8W-54-3
G200	8W-54-2
G300	8W-54-3
G301	8W-54-4
Junction Block	8W-54-2, 3, 4, 6
Park Lamp Relay	8W-54-2
Park/Neutral Position Switch	8W-54-6
Trailer Tow Brake Lamp Relay	8W-54-3, 5
Trailer Tow Circuit Breaker	8W-54-6
Trailer Tow Connector	8W-54-2, 3, 5, 6
Trailer Tow Electric Brake Provision	8W-54-6
Trailer Tow Left Turn Relay	8W-54-5
Trailer Tow Right Turn Relay	8W-54-5
Transmission Solenoid/TRS Assembly	8W-54-6

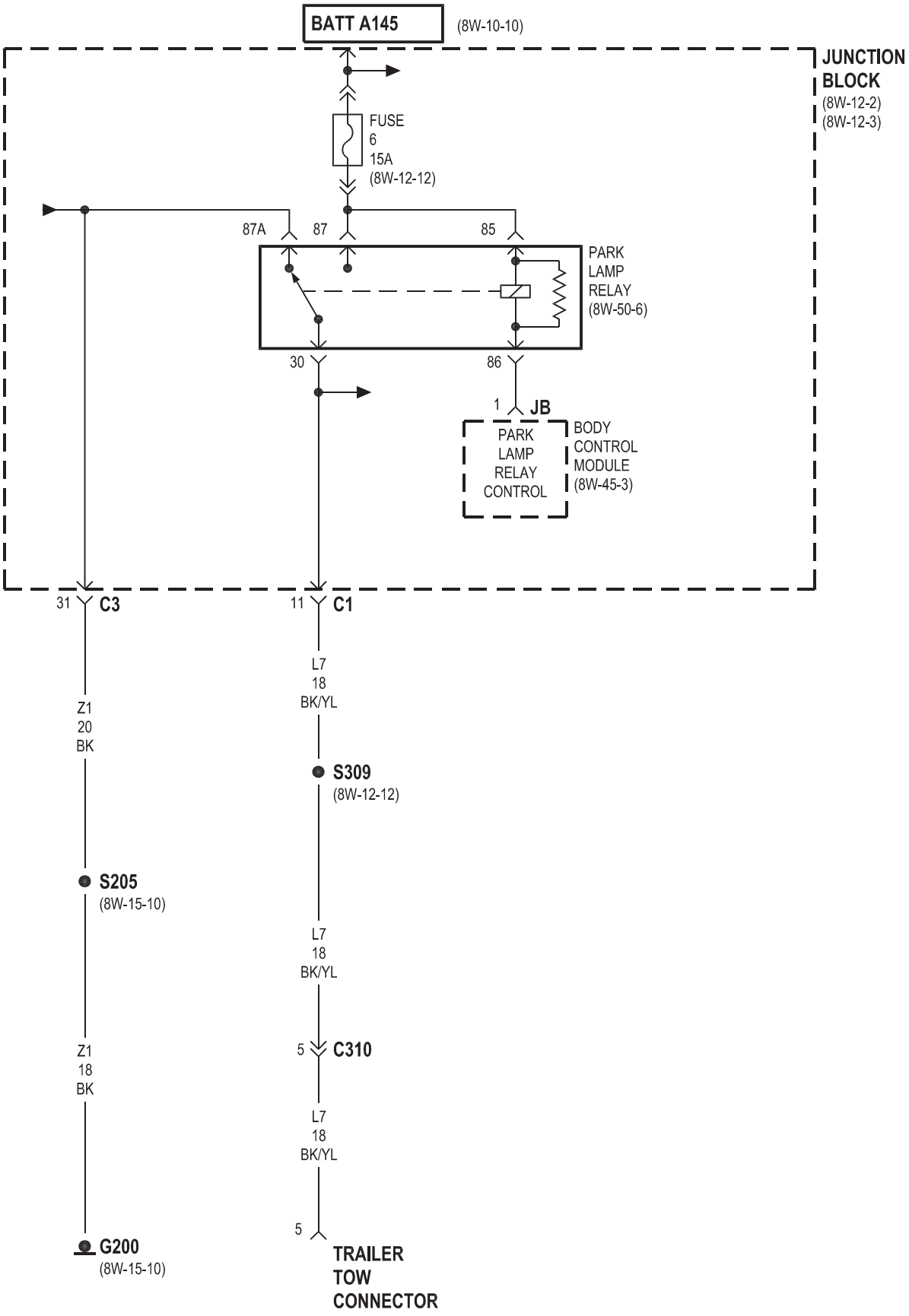
BATT A145
(8W-10-10)
JUNCTION BLOCK
(8W-12-2)
(8W-12-3)
FUSE
6
15A
(8W-12-12)
87A
87
85
PARK LAMP RELAY
(8W-50-6)
30
86
1
JB
PARK LAMP RELAY CONTROL
BODY CONTROL MODULE
(8W-45-3)
31
C3
11
C1
L7
18
BK/YL
Z1
20
BK
S309
(8W-12-12)
S205
(8W-15-10)
L7
18
BK/YL
5
C310
Z1
18
BK
L7
18
BK/YL
5
G200
(8W-15-10)
TRAILER TOW CONNECTOR

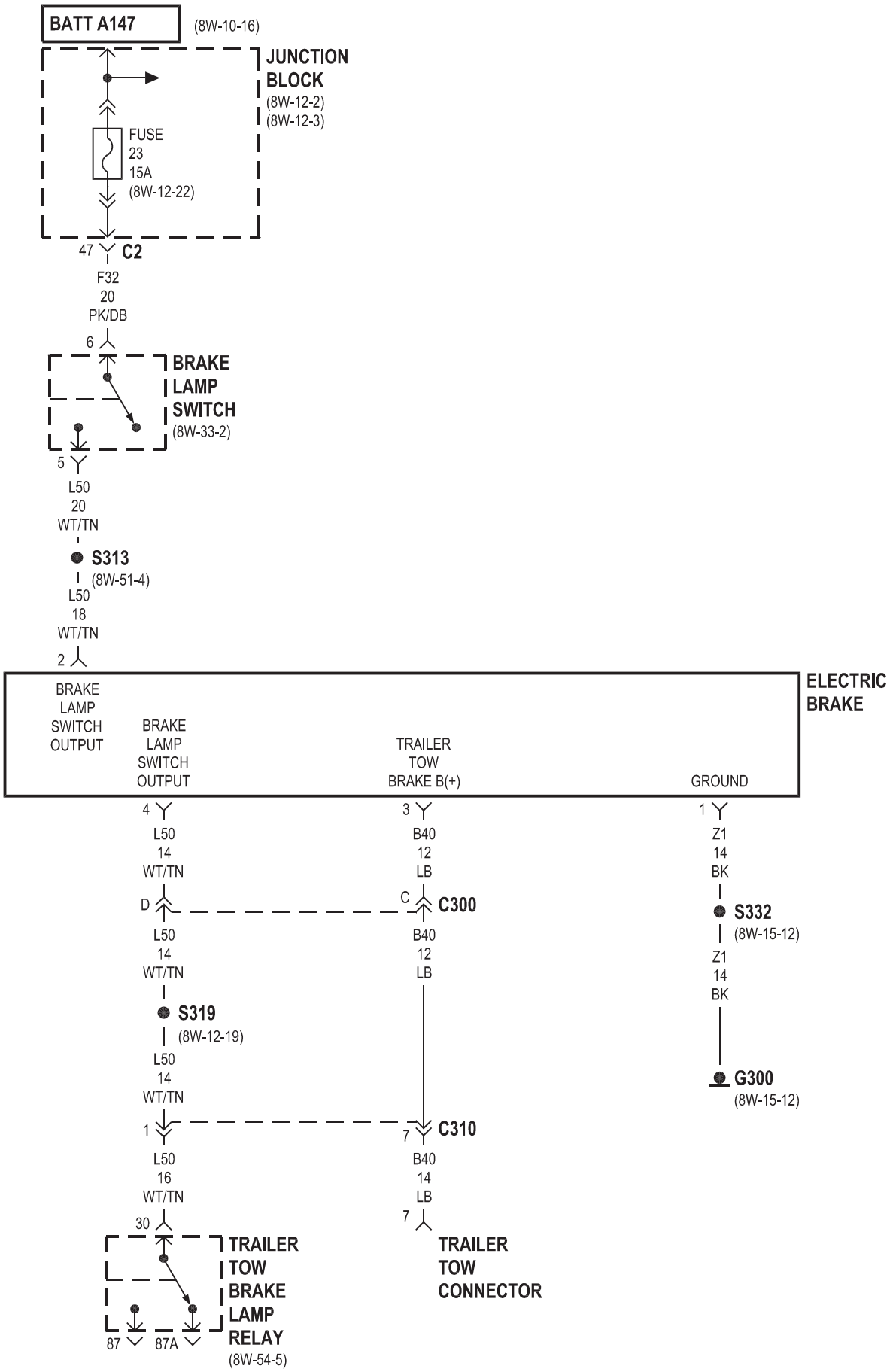
BATT A147
(8W-10-16)
JUNCTION BLOCK
(8W-12-2)
(8W-12-3)
FUSE
23
15A
(8W-12-22)
47
C2
F32
20
PK/DB
6
BRAKE LAMP SWITCH
(8W-33-2)
5
L50
20
WT/TN
S313
(8W-51-4)
L50
18
WT/TN
2
ELECTRIC BRAKE
BRAKE LAMP SWITCH OUTPUT
BRAKE LAMP SWITCH OUTPUT
TRAILER TOW BRAKE B(+)
GROUND
4
L50
14
WT/TN
3
B40
12
LB
1
Z1
14
BK
D
C
C300
L50
14
WT/TN
B40
12
LB
S332
(8W-15-12)
Z1
14
BK
S319
(8W-12-19)
L50
14
WT/TN
G300
(8W-15-12)
1
7
C310
L50
16
WT/TN
B40
14
LB
30
7
TRAILER TOW BRAKE LAMP RELAY
(8W-54-5)
TRAILER TOW CONNECTOR
87
87A

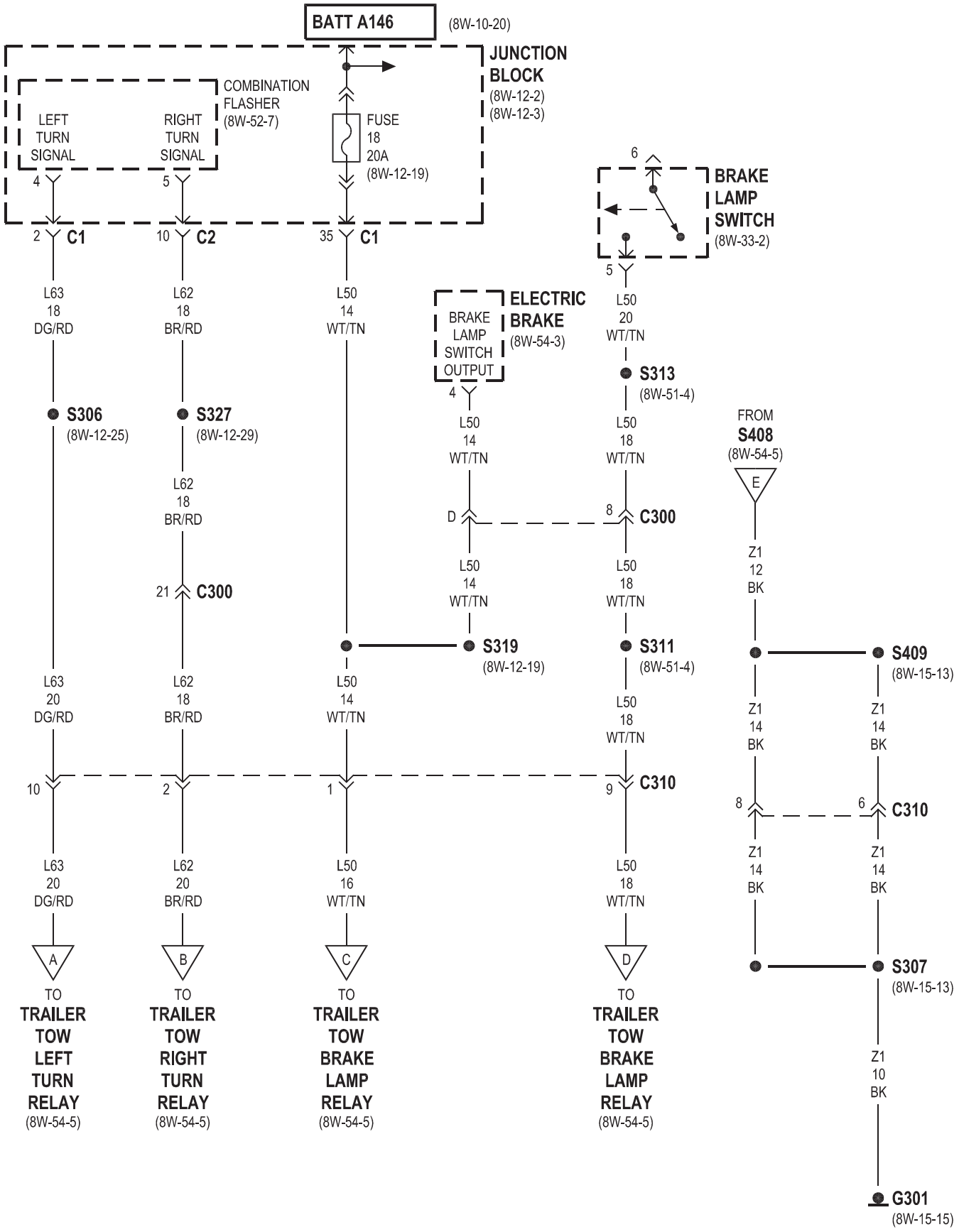
BATT A146
(8W-10-20)
JUNCTION BLOCK
(8W-12-2)
(8W-12-3)
COMBINATION FLASHER
(8W-52-7)
LEFT TURN SIGNAL
RIGHT TURN SIGNAL
FUSE 18 20A
(8W-12-19)
4
5
2 C1
10 C2
35 C1
6
BRAKE LAMP SWITCH
(8W-33-2)
5
L63 18 DG/RD
L62 18 BR/RD
L50 14 WT/TN
ELECTRIC BRAKE
(8W-54-3)
BRAKE LAMP SWITCH OUTPUT
L50 20 WT/TN
S313
(8W-51-4)
S306
(8W-12-25)
S327
(8W-12-29)
4
L50 14 WT/TN
L50 18 WT/TN
FROM S408
(8W-54-5)
E
L62 18 BR/RD
D
8 C300
Z1 12 BK
21 C300
L50 14 WT/TN
L50 18 WT/TN
S319
(8W-12-19)
S311
(8W-51-4)
S409
(8W-15-13)
L63 20 DG/RD
L62 18 BR/RD
L50 14 WT/TN
L50 18 WT/TN
Z1 14 BK
Z1 14 BK
10
2
1
9 C310
8
6 C310
L63 20 DG/RD
L62 20 BR/RD
L50 16 WT/TN
L50 18 WT/TN
Z1 14 BK
Z1 14 BK
A
B
C
D
S307
(8W-15-13)
TO TRAILER TOW LEFT TURN RELAY
(8W-54-5)
TO TRAILER TOW RIGHT TURN RELAY
(8W-54-5)
TO TRAILER TOW BRAKE LAMP RELAY
(8W-54-5)
TO TRAILER TOW BRAKE LAMP RELAY
(8W-54-5)
Z1 10 BK
G301
(8W-15-15)

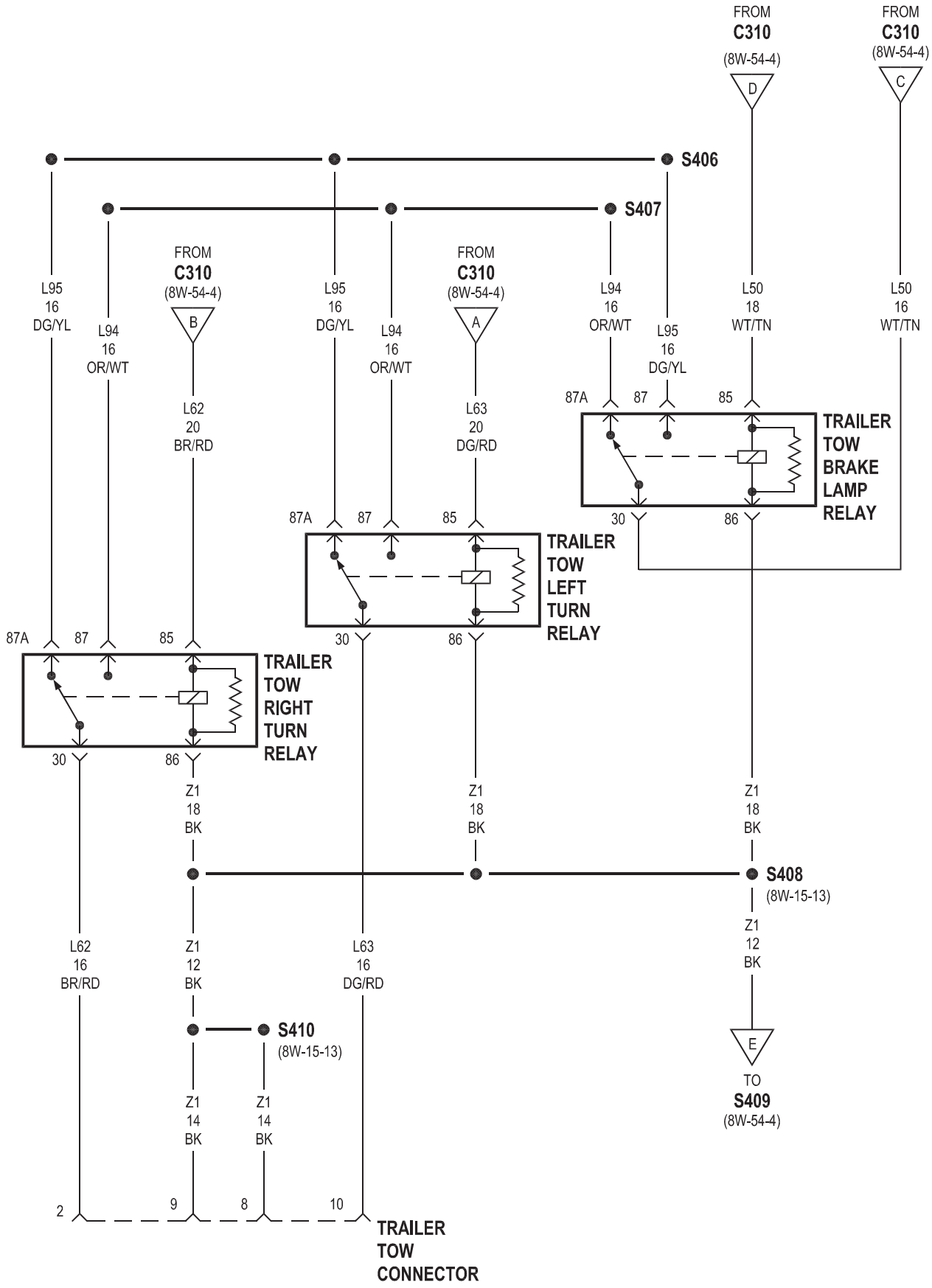
FROM
C310
(8W-54-4)
D
FROM
C310
(8W-54-4)
C
S406
S407
FROM
C310
(8W-54-4)
B
FROM
C310
(8W-54-4)
A
L95
16
DG/YL
L94
16
OR/WT
L62
20
BR/RD
L95
16
DG/YL
L94
16
OR/WT
L63
20
DG/RD
L94
16
OR/WT
L95
16
DG/YL
L50
18
WT/TN
L50
16
WT/TN
87A
87
85
30
86
TRAILER
TOW
BRAKE
LAMP
RELAY
TRAILER
TOW
LEFT
TURN
RELAY
TRAILER
TOW
RIGHT
TURN
RELAY
Z1
18
BK
S408
(8W-15-13)
Z1
12
BK
L62
16
BR/RD
L63
16
DG/RD
S410
(8W-15-13)
Z1
14
BK
E
TO
S409
(8W-54-4)
2
9
8
10
TRAILER
TOW
CONNECTOR

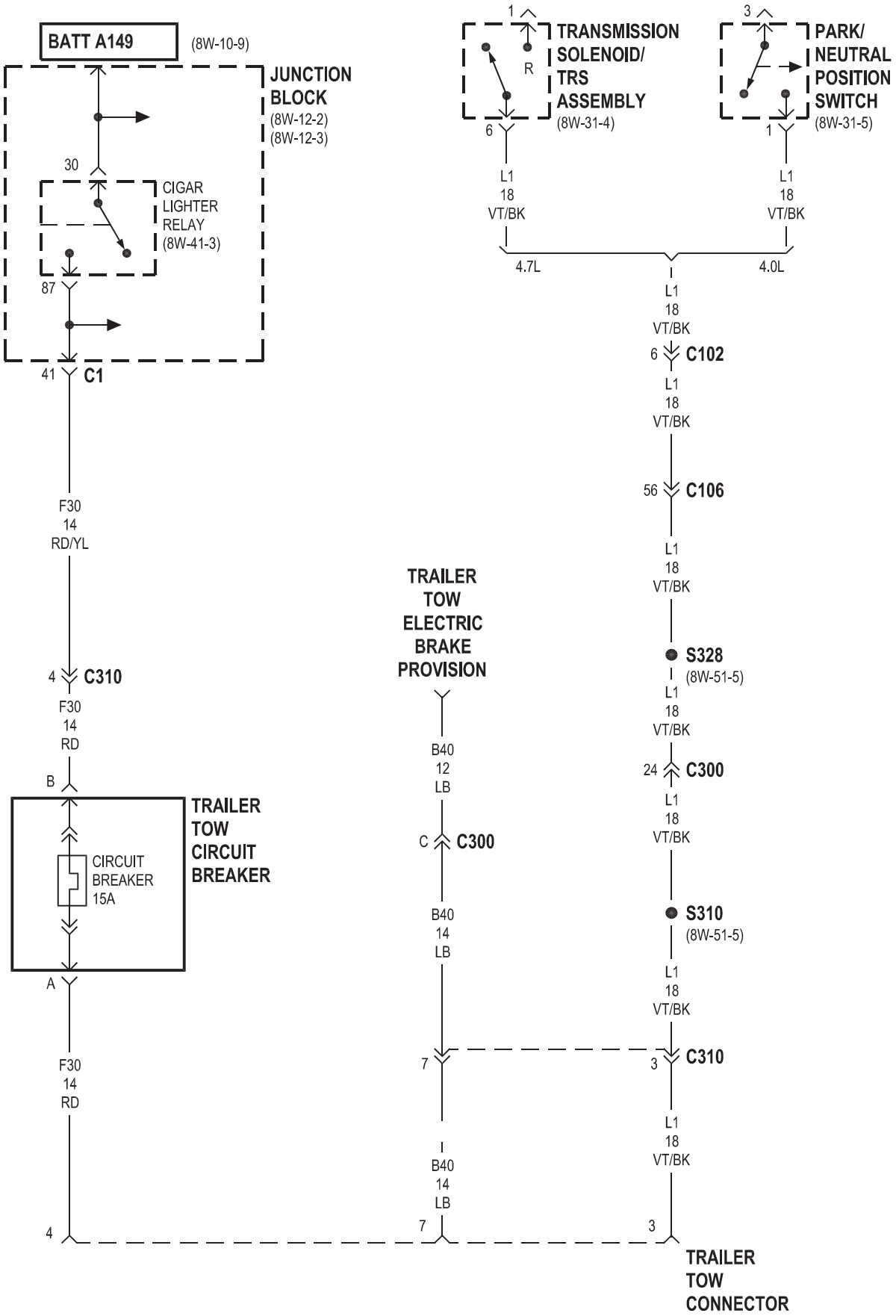
BATT A149
(8W-10-9)
JUNCTION BLOCK
(8W-12-2)
(8W-12-3)
30
CIGAR LIGHTER RELAY
(8W-41-3)
87
41
C1
F30
14
RD/YL
4
C310
F30
14
RD
B
TRAILER TOW CIRCUIT BREAKER
CIRCUIT BREAKER 15A
A
F30
14
RD
4
1
R
6
TRANSMISSION SOLENOID/ TRS ASSEMBLY
(8W-31-4)
3
1
PARK/ NEUTRAL POSITION SWITCH
(8W-31-5)
L1
18
VT/BK
L1
18
VT/BK
4.7L
4.0L
L1
18
VT/BK
6
C102
L1
18
VT/BK
56
C106
L1
18
VT/BK
S328
(8W-51-5)
L1
18
VT/BK
24
C300
L1
18
VT/BK
S310
(8W-51-5)
L1
18
VT/BK
3
C310
L1
18
VT/BK
3
TRAILER TOW CONNECTOR
TRAILER TOW ELECTRIC BRAKE PROVISION
B40
12
LB
C
C300
B40
14
LB
7
B40
14
LB
7

8W-60 POWER WINDOWS

Component	Page
Body Control Module	8W-60-2
Diagnostic Junction Port	8W-60-2
Driver Door Module	8W-60-2, 3, 4
Driver Front Power Window Motor	8W-60-2
Driver Rear Power Window Motor	8W-60-4
Driver Rear Power Window Switch	8W-60-4
Fuse 12 (PDC)	8W-60-2
G300	8W-60-2, 3, 5
G301	8W-60-4
Junction Block	8W-60-2, 3
Passenger Door Module	8W-60-2, 3, 5
Passenger Front Power Window Motor	8W-60-2
Passenger Rear Power Window Motor	8W-60-5
Passenger Rear Power Window Switch	8W-60-5
Power Distribution Center	8W-60-2

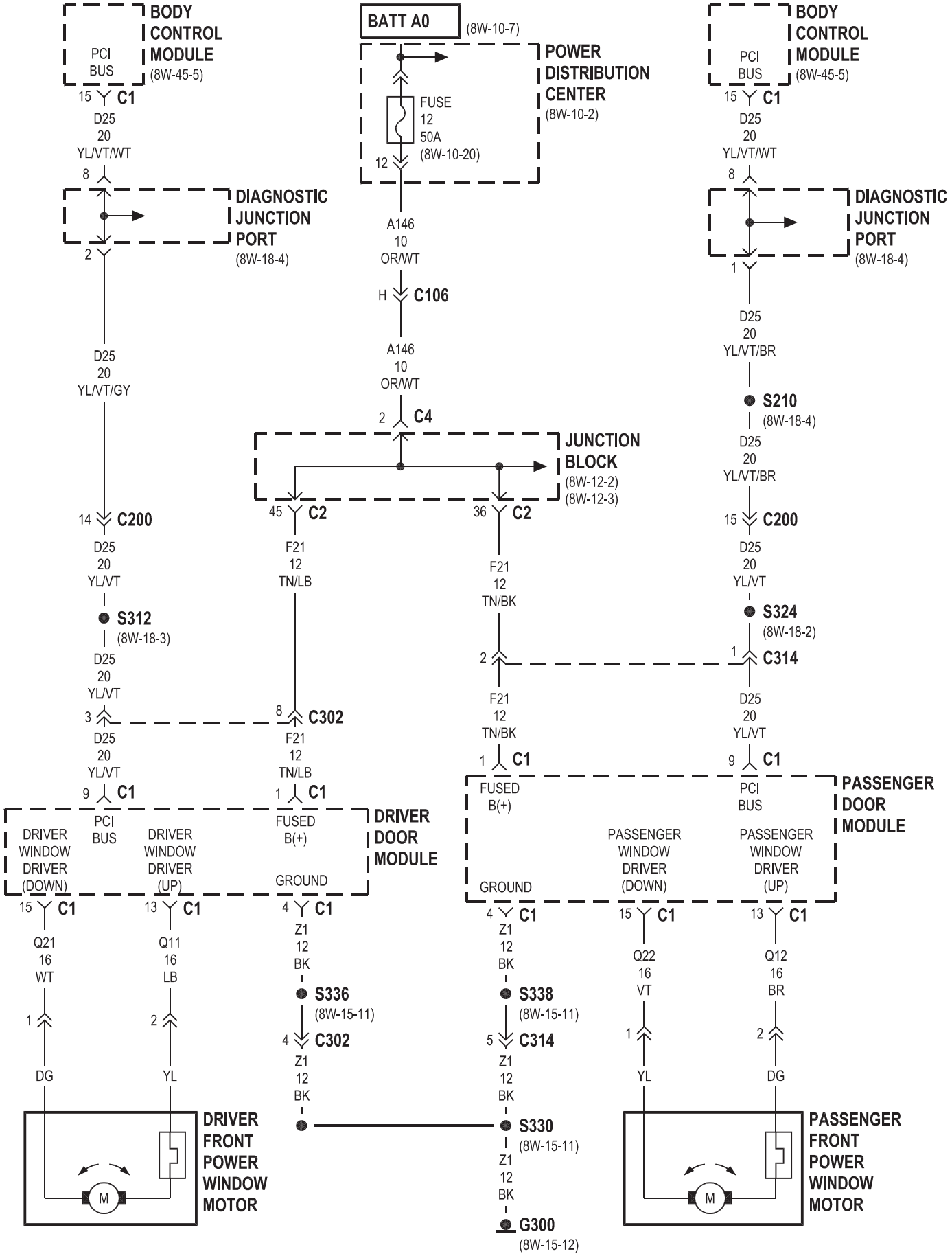
BODY CONTROL MODULE (8W-45-5)
PCI BUS
15 C1
D25 20 YL/VT/WT
8
DIAGNOSTIC JUNCTION PORT (8W-18-4)
2
D25 20 YL/VT/GY
14 C200
D25 20 YL/VT
S312 (8W-18-3)
D25 20 YL/VT
3
D25 20 YL/VT
9 C1
PCI BUS
DRIVER WINDOW DRIVER (DOWN)
DRIVER WINDOW DRIVER (UP)
15 C1
13 C1
Q21 16 WT
Q11 16 LB
1
2
DG
YL
DRIVER FRONT POWER WINDOW MOTOR
M
BATT A0 (8W-10-7)
POWER DISTRIBUTION CENTER (8W-10-2)
FUSE 12 50A (8W-10-20)
12
A146 10 OR/WT
H C106
A146 10 OR/WT
2 C4
JUNCTION BLOCK (8W-12-2) (8W-12-3)
45 C2
36 C2
F21 12 TN/LB
F21 12 TN/BK
8 C302
F21 12 TN/LB
1 C1
FUSED B(+)
GROUND
DRIVER DOOR MODULE
4 C1
Z1 12 BK
S336 (8W-15-11)
4 C302
Z1 12 BK
S330 (8W-15-11)
Z1 12 BK
G300 (8W-15-12)
2
F21 12 TN/BK
1 C1
FUSED B(+)
GROUND
4 C1
Z1 12 BK
S338 (8W-15-11)
5 C314
Z1 12 BK
BODY CONTROL MODULE (8W-45-5)
PCI BUS
15 C1
D25 20 YL/VT/WT
8
DIAGNOSTIC JUNCTION PORT (8W-18-4)
1
D25 20 YL/VT/BR
S210 (8W-18-4)
D25 20 YL/VT/BR
15 C200
D25 20 YL/VT
S324 (8W-18-2)
1 C314
D25 20 YL/VT
9 C1
PCI BUS
PASSENGER DOOR MODULE
PASSENGER WINDOW DRIVER (DOWN)
PASSENGER WINDOW DRIVER (UP)
15 C1
13 C1
Q22 16 VT
Q12 16 BR
1
2
YL
DG
PASSENGER FRONT POWER WINDOW MOTOR
M

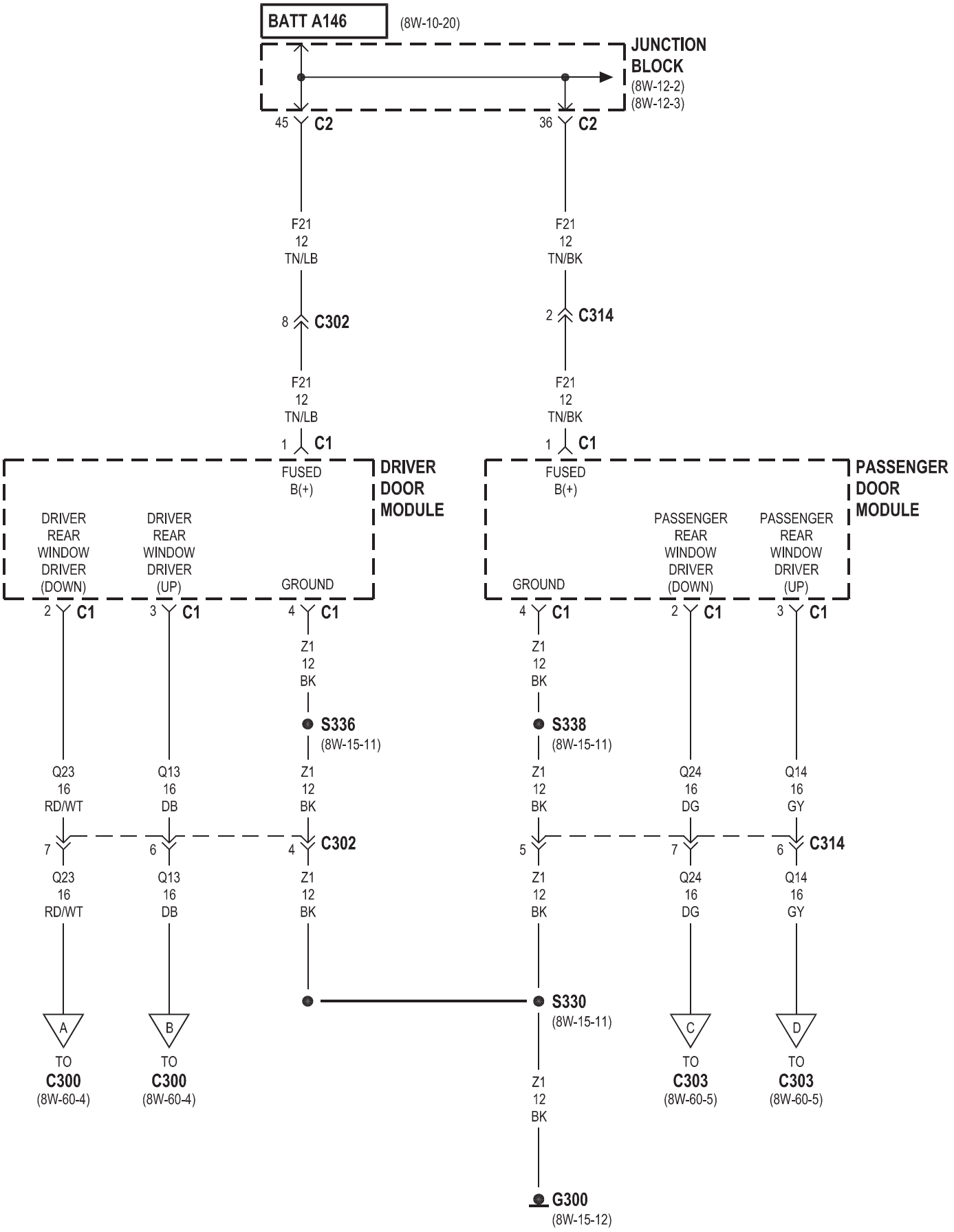
BATT A146
(8W-10-20)
JUNCTION BLOCK
(8W-12-2)
(8W-12-3)
45 C2
36 C2
F21 12 TN/LB
F21 12 TN/BK
8 C302
2 C314
F21 12 TN/LB
F21 12 TN/BK
1 C1
1 C1
FUSED B(+)
DRIVER DOOR MODULE
FUSED B(+)
PASSENGER DOOR MODULE
DRIVER REAR WINDOW DRIVER (DOWN)
DRIVER REAR WINDOW DRIVER (UP)
GROUND
GROUND
PASSENGER REAR WINDOW DRIVER (DOWN)
PASSENGER REAR WINDOW DRIVER (UP)
2 C1
3 C1
4 C1
4 C1
2 C1
3 C1
Z1 12 BK
Z1 12 BK
S336
(8W-15-11)
S338
(8W-15-11)
Q23 16 RD/WT
Q13 16 DB
Z1 12 BK
Z1 12 BK
Q24 16 DG
Q14 16 GY
7
6
4 C302
5
7
6 C314
Q23 16 RD/WT
Q13 16 DB
Z1 12 BK
Z1 12 BK
Q24 16 DG
Q14 16 GY
S330
(8W-15-11)
A
B
C
D
TO C300 (8W-60-4)
TO C300 (8W-60-4)
TO C303 (8W-60-5)
TO C303 (8W-60-5)
Z1 12 BK
G300
(8W-15-12)

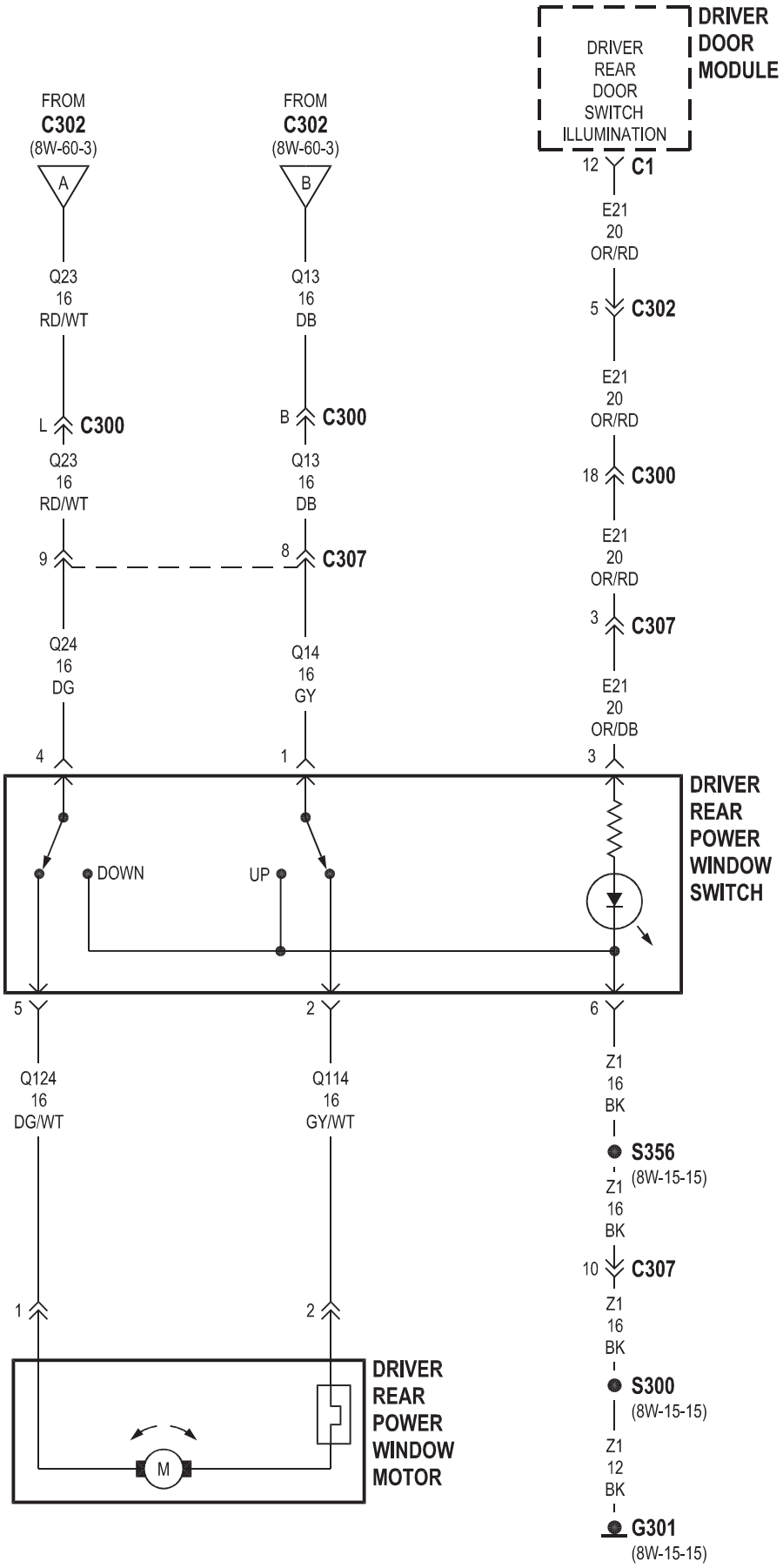
DRIVER DOOR MODULE
DRIVER REAR DOOR SWITCH ILLUMINATION
12 C1
E21 20 OR/RD
5 C302
E21 20 OR/RD
18 C300
E21 20 OR/RD
3 C307
E21 20 OR/DB
3
FROM C302 (8W-60-3)
A
Q23 16 RD/WT
L C300
Q23 16 RD/WT
9
Q24 16 DG
4
FROM C302 (8W-60-3)
B
Q13 16 DB
B C300
Q13 16 DB
8 C307
Q14 16 GY
1
DRIVER REAR POWER WINDOW SWITCH
DOWN
UP
5
2
6
Q124 16 DG/WT
Q114 16 GY/WT
Z1 16 BK
S356 (8W-15-15)
Z1 16 BK
10 C307
Z1 16 BK
S300 (8W-15-15)
Z1 12 BK
G301 (8W-15-15)
1
2
M
DRIVER REAR POWER WINDOW MOTOR

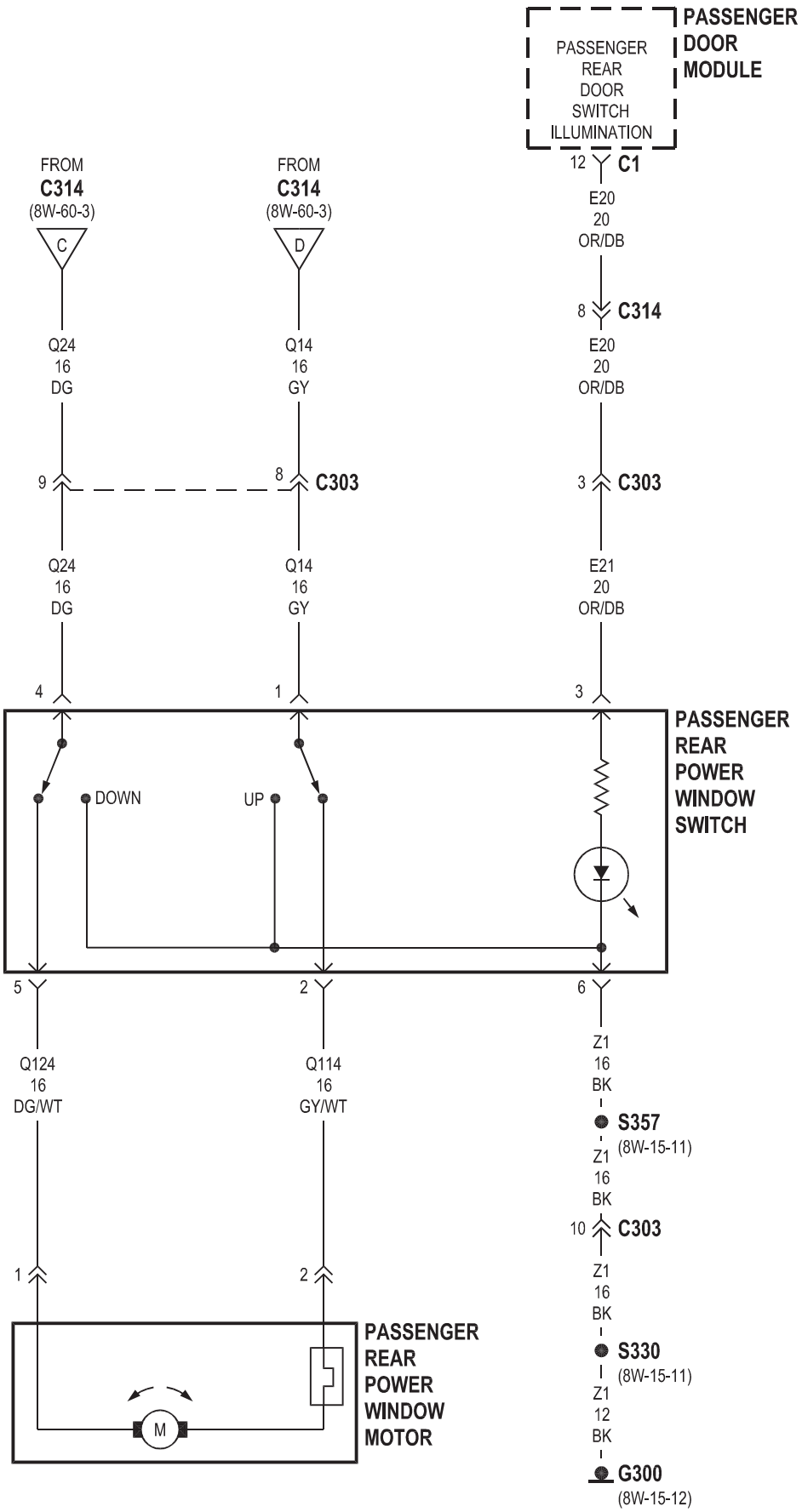
PASSENGER DOOR MODULE
PASSENGER REAR DOOR SWITCH ILLUMINATION
12 C1
E20 20 OR/DB
8 C314
E20 20 OR/DB
3 C303
E21 20 OR/DB
FROM C314 (8W-60-3)
C
Q24 16 DG
9
FROM C314 (8W-60-3)
D
Q14 16 GY
8 C303
Q24 16 DG
Q14 16 GY
4
1
3
PASSENGER REAR POWER WINDOW SWITCH
DOWN
UP
5
2
6
Q124 16 DG/WT
Q114 16 GY/WT
Z1 16 BK
S357 (8W-15-11)
Z1 16 BK
10 C303
Z1 16 BK
S330 (8W-15-11)
Z1 12 BK
G300 (8W-15-12)
1
2
PASSENGER REAR POWER WINDOW MOTOR
M

8W-61 POWER DOOR LOCKS

Component	Page
Body Control Module	8W-61-2, 4, 6, 7, 9
Diagnostic Junction Port	8W-61-2, 4
Driver Cylinder Lock Switch	8W-61-3
Driver Door Lock Motor/Ajar Switch	8W-61-3
Driver Door Module	8W-61-2, 3
Fuse 8 (JB)	8W-61-8
G300	8W-61-3, 4, 7
G301	8W-61-6, 8, 9
Junction Block	8W-61-2, 4, 6, 8, 9
Left Liftgate Ajar Switch	8W-61-9
Left Rear Door Power Lock Motor/Ajar Switch	8W-61-5, 6
Liftgate Flip-Up Ajar Switch	8W-61-9
Liftgate Flip-Up Push Button Switch	8W-61-8
Liftgate Flip-Up Release Solenoid	8W-61-8
Liftgate Power Lock Motor	8W-61-5, 8
Passenger Door Lock Motor/Ajar Switch	8W-61-4, 5
Passenger Door Module	8W-61-4, 5, 6, 7, 8
Rear Wiper Motor	8W-61-9
Right Liftgate Ajar Switch	8W-61-9
Right Rear Door Power Lock Motor/Ajar Switch	8W-61-5, 7

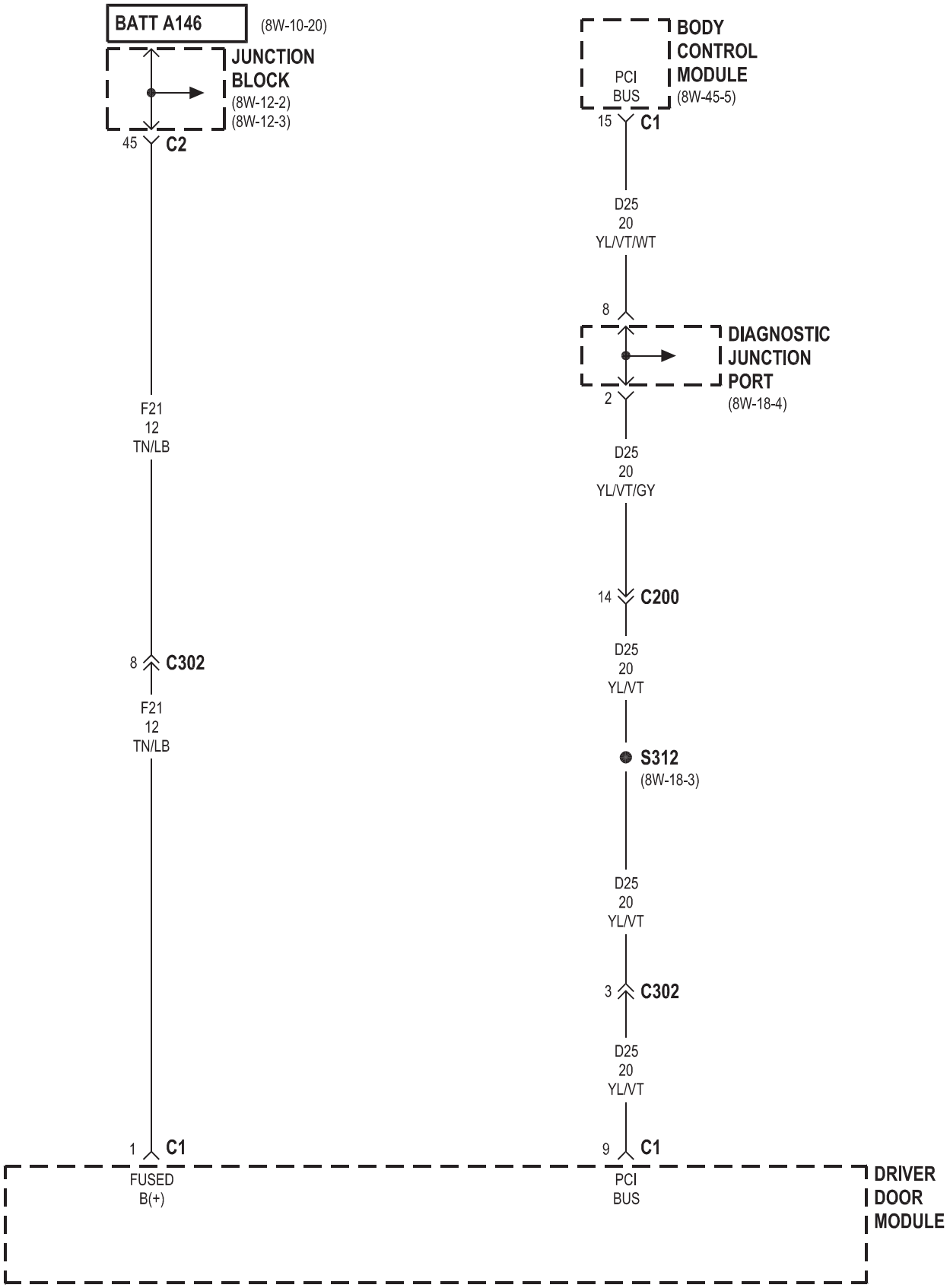
BATT A146
(8W-10-20)
JUNCTION BLOCK
(8W-12-2)
(8W-12-3)
45
C2
F21
12
TN/LB
8
C302
F21
12
TN/LB
1
C1
FUSED
B(+)
BODY CONTROL MODULE
(8W-45-5)
PCI BUS
15
C1
D25
20
YL/VT/WT
8
DIAGNOSTIC JUNCTION PORT
(8W-18-4)
2
D25
20
YL/VT/GY
14
C200
D25
20
YL/VT
S312
(8W-18-3)
D25
20
YL/VT
3
C302
D25
20
YL/VT
9
C1
PCI
BUS
DRIVER DOOR MODULE

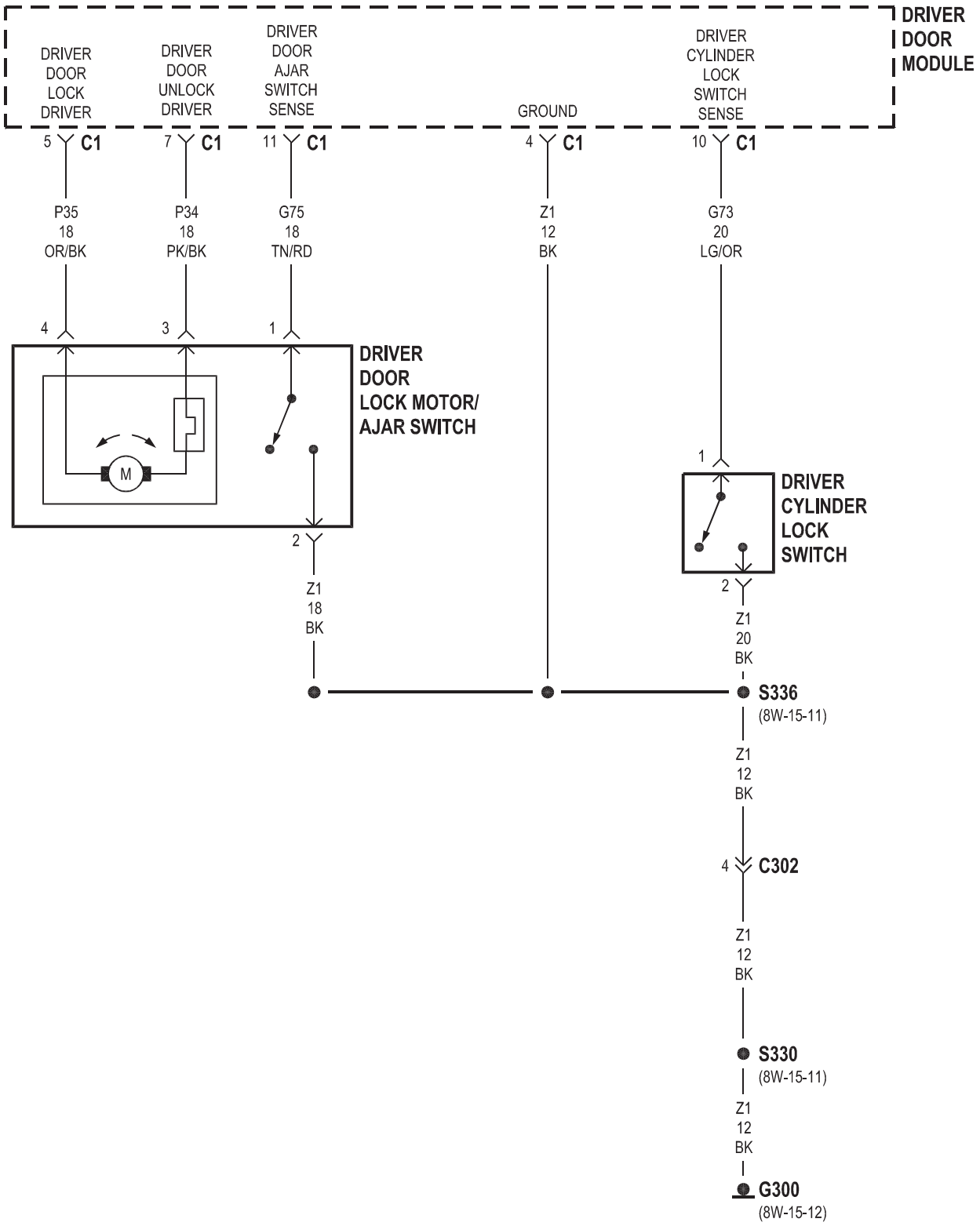
DRIVER DOOR MODULE
DRIVER DOOR LOCK DRIVER
DRIVER DOOR UNLOCK DRIVER
DRIVER DOOR AJAR SWITCH SENSE
GROUND
DRIVER CYLINDER LOCK SWITCH SENSE
5 C1
7 C1
11 C1
4 C1
10 C1
P35 18 OR/BK
P34 18 PK/BK
G75 18 TN/RD
Z1 12 BK
G73 20 LG/OR
4
3
1
M
DRIVER DOOR LOCK MOTOR/ AJAR SWITCH
2
Z1 18 BK
1
DRIVER CYLINDER LOCK SWITCH
2
Z1 20 BK
S336
(8W-15-11)
Z1 12 BK
4 C302
Z1 12 BK
S330
(8W-15-11)
Z1 12 BK
G300
(8W-15-12)

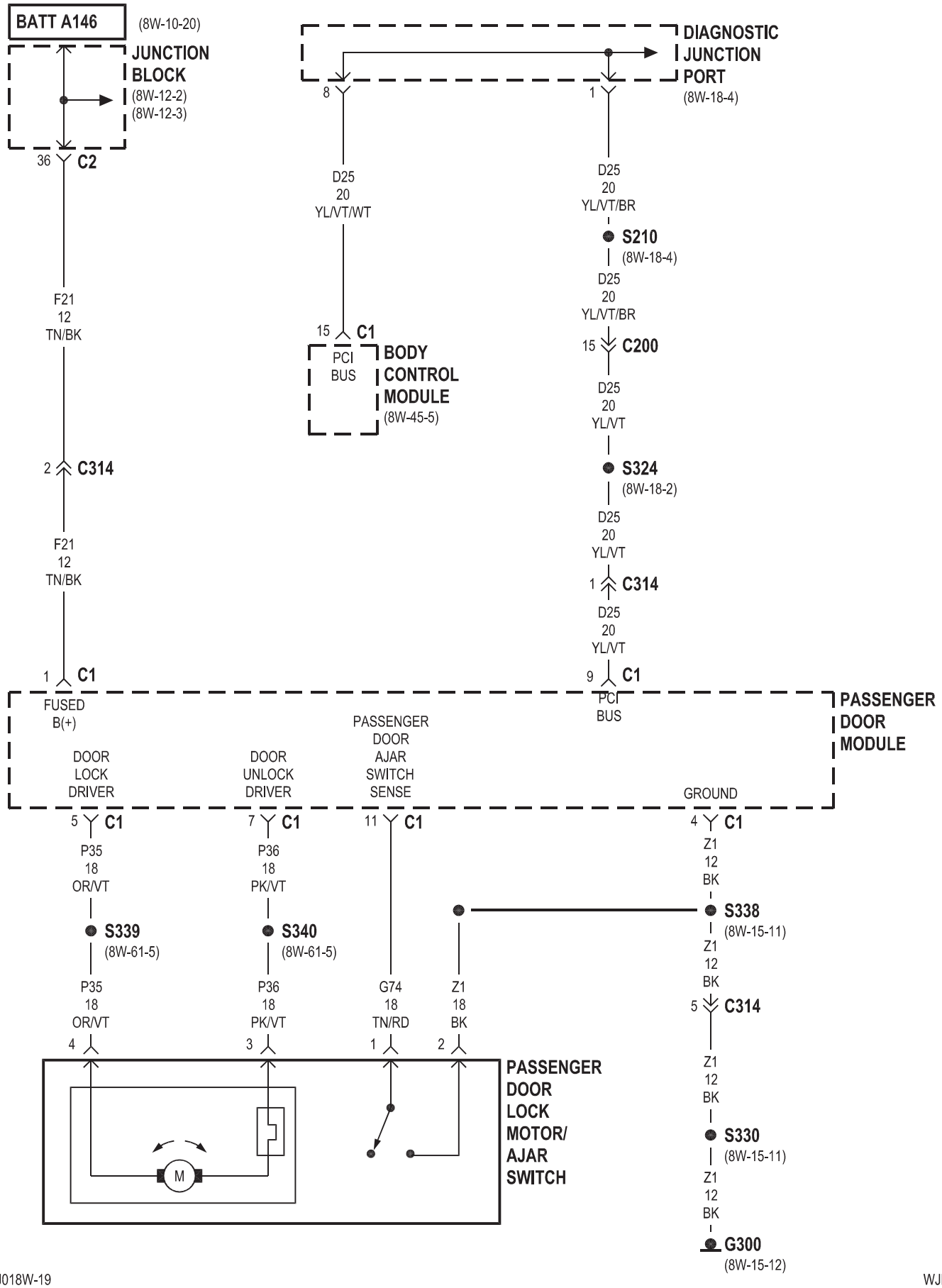
BATT A146
(8W-10-20)
JUNCTION BLOCK
(8W-12-2)
(8W-12-3)
36 C2
F21
12
TN/BK
2 C314
F21
12
TN/BK
1 C1
FUSED B(+)
DIAGNOSTIC JUNCTION PORT
(8W-18-4)
8
1
D25
20
YL/VT/WT
15 C1
PCI BUS
BODY CONTROL MODULE
(8W-45-5)
D25
20
YL/VT/BR
S210
(8W-18-4)
D25
20
YL/VT/BR
15 C200
D25
20
YL/VT
S324
(8W-18-2)
D25
20
YL/VT
1 C314
D25
20
YL/VT
9 C1
PCI BUS
PASSENGER DOOR MODULE
DOOR LOCK DRIVER
DOOR UNLOCK DRIVER
PASSENGER DOOR AJAR SWITCH SENSE
GROUND
5 C1
7 C1
11 C1
4 C1
P35
18
OR/VT
P36
18
PK/VT
Z1
12
BK
S339
(8W-61-5)
S340
(8W-61-5)
S338
(8W-15-11)
Z1
12
BK
5 C314
P35
18
OR/VT
P36
18
PK/VT
G74
18
TN/RD
Z1
18
BK
4
3
1
2
M
PASSENGER DOOR LOCK MOTOR/ AJAR SWITCH
Z1
12
BK
S330
(8W-15-11)
Z1
12
BK
G300
(8W-15-12)

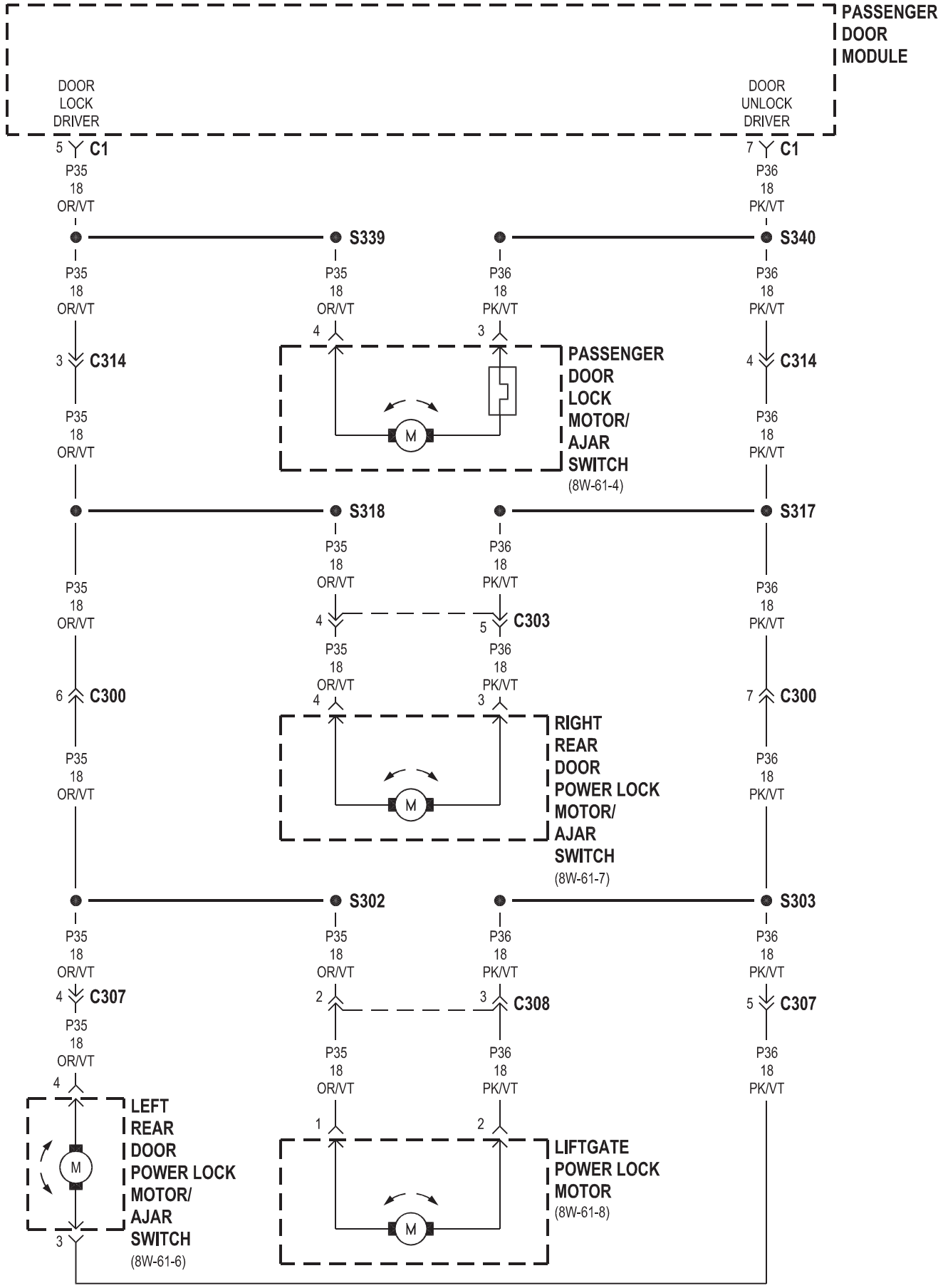
PASSENGER DOOR MODULE
DOOR LOCK DRIVER
DOOR UNLOCK DRIVER
5 C1
7 C1
P35 18 OR/VT
P36 18 PK/VT
S339
S340
3 C314
4 C314
PASSENGER DOOR LOCK MOTOR/ AJAR SWITCH
(8W-61-4)
S318
S317
C303
6 C300
7 C300
RIGHT REAR DOOR POWER LOCK MOTOR/ AJAR SWITCH
(8W-61-7)
S302
S303
4 C307
5 C307
C308
LEFT REAR DOOR POWER LOCK MOTOR/ AJAR SWITCH
(8W-61-6)
LIFTGATE POWER LOCK MOTOR
(8W-61-8)
M

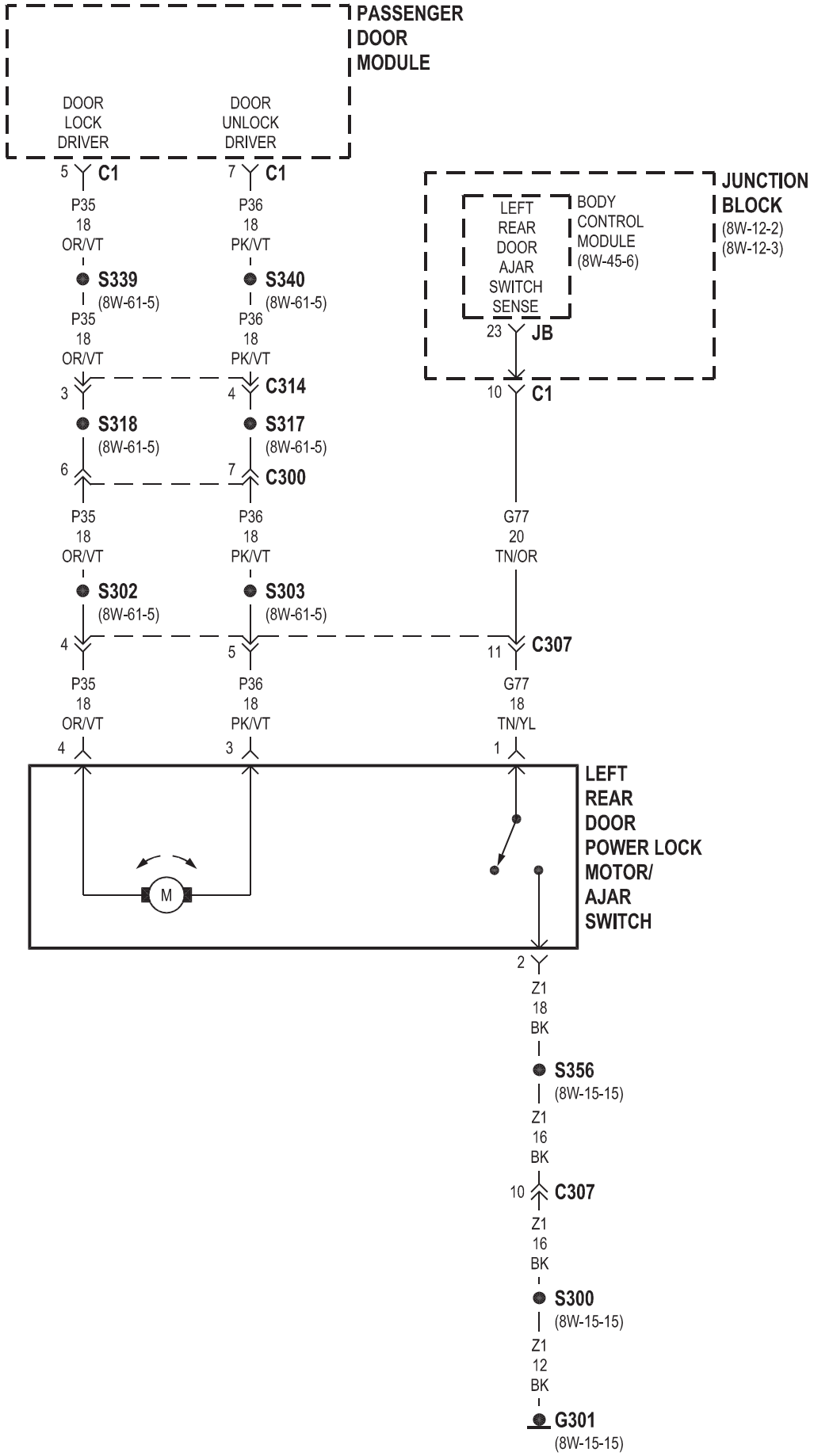
PASSENGER DOOR MODULE
DOOR LOCK DRIVER
DOOR UNLOCK DRIVER
5 C1
7 C1
P35 18 OR/VT
P36 18 PK/VT
S339 (8W-61-5)
S340 (8W-61-5)
P35 18 OR/VT
P36 18 PK/VT
3
4 C314
S318 (8W-61-5)
S317 (8W-61-5)
6
7 C300
P35 18 OR/VT
P36 18 PK/VT
S302 (8W-61-5)
S303 (8W-61-5)
4
5
P35 18 OR/VT
P36 18 PK/VT
4
3
JUNCTION BLOCK (8W-12-2) (8W-12-3)
LEFT REAR DOOR AJAR SWITCH SENSE
BODY CONTROL MODULE (8W-45-6)
23 JB
10 C1
G77 20 TN/OR
11 C307
G77 18 TN/YL
1
LEFT REAR DOOR POWER LOCK MOTOR/ AJAR SWITCH
M
2
Z1 18 BK
S356 (8W-15-15)
Z1 16 BK
10 C307
Z1 16 BK
S300 (8W-15-15)
Z1 12 BK
G301 (8W-15-15)

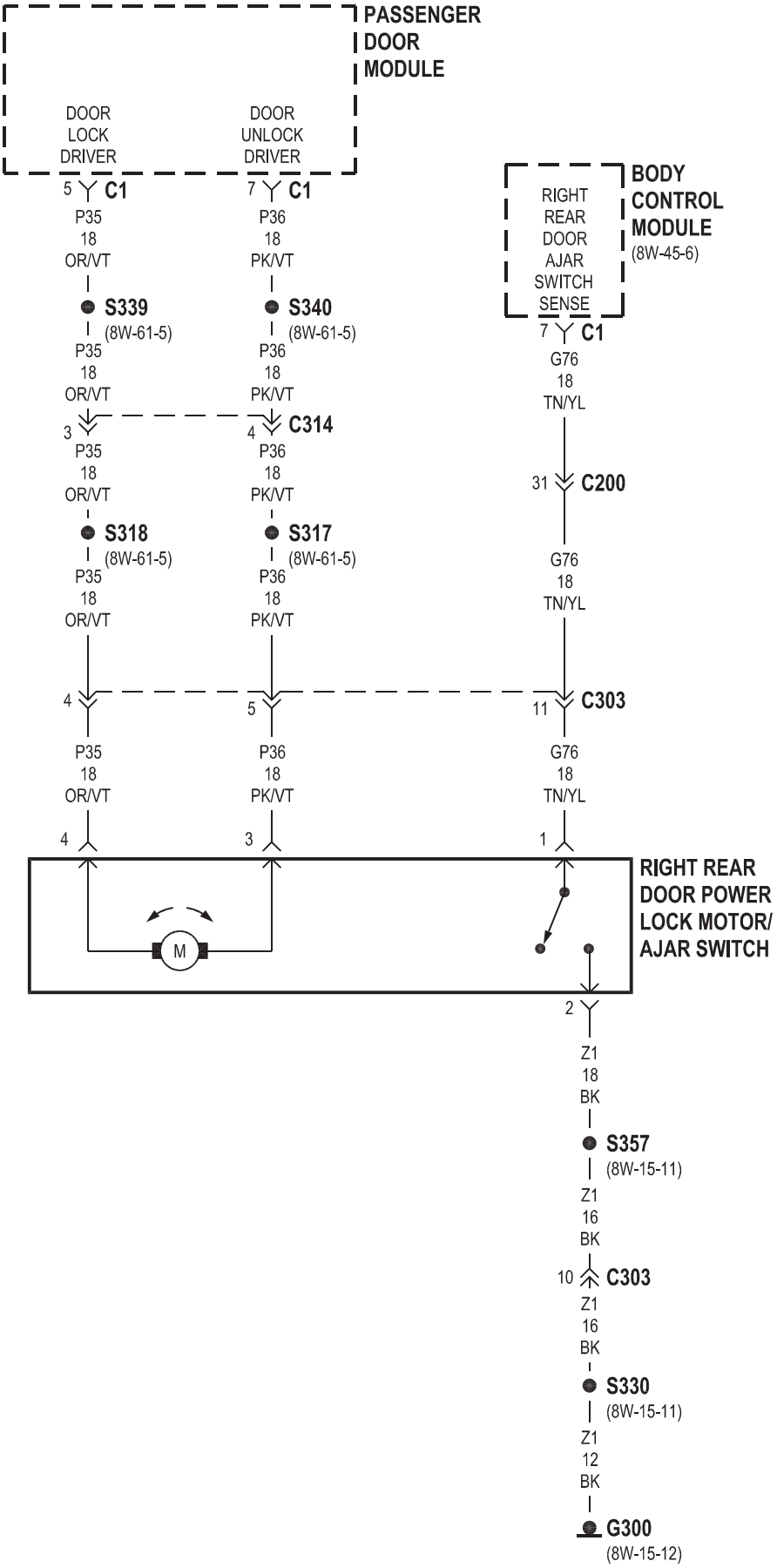
PASSENGER DOOR MODULE
DOOR LOCK DRIVER
DOOR UNLOCK DRIVER
5 C1
7 C1
P35 18 OR/VT
P36 18 PK/VT
S339 (8W-61-5)
S340 (8W-61-5)
P35 18 OR/VT
P36 18 PK/VT
3 C314
4 C314
P35 18 OR/VT
P36 18 PK/VT
S318 (8W-61-5)
S317 (8W-61-5)
P35 18 OR/VT
P36 18 PK/VT
4
5
P35 18 OR/VT
P36 18 PK/VT
4
3
BODY CONTROL MODULE (8W-45-6)
RIGHT REAR DOOR AJAR SWITCH SENSE
7 C1
G76 18 TN/YL
31 C200
G76 18 TN/YL
11 C303
G76 18 TN/YL
1
M
RIGHT REAR DOOR POWER LOCK MOTOR/ AJAR SWITCH
2
Z1 18 BK
S357 (8W-15-11)
Z1 16 BK
10 C303
Z1 16 BK
S330 (8W-15-11)
Z1 12 BK
G300 (8W-15-12)

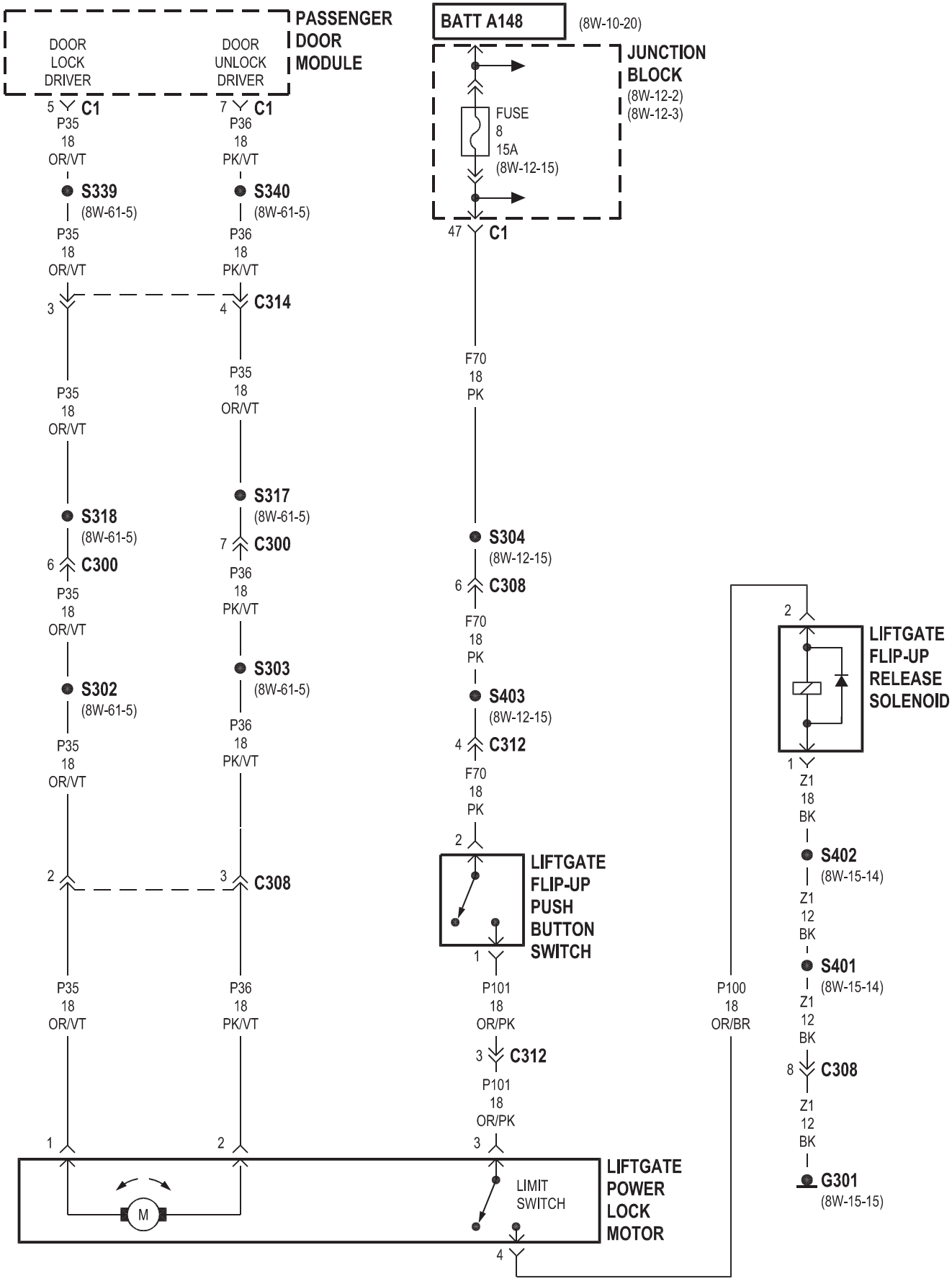
PASSENGER DOOR MODULE
DOOR LOCK DRIVER
DOOR UNLOCK DRIVER
5 C1
7 C1
P35 18 OR/VT
P36 18 PK/VT
S339 (8W-61-5)
S340 (8W-61-5)
3
4 C314
S318 (8W-61-5)
S317 (8W-61-5)
6 C300
7 C300
S302 (8W-61-5)
S303 (8W-61-5)
2
3 C308
BATT A148
(8W-10-20)
JUNCTION BLOCK
(8W-12-2)
(8W-12-3)
FUSE 8 15A (8W-12-15)
47 C1
F70 18 PK
S304 (8W-12-15)
6 C308
S403 (8W-12-15)
4 C312
LIFTGATE FLIP-UP PUSH BUTTON SWITCH
1
P101 18 OR/PK
3 C312
LIFTGATE FLIP-UP RELEASE SOLENOID
Z1 18 BK
S402 (8W-15-14)
Z1 12 BK
S401 (8W-15-14)
8 C308
G301 (8W-15-15)
P100 18 OR/BR
M
LIMIT SWITCH
LIFTGATE POWER LOCK MOTOR
4

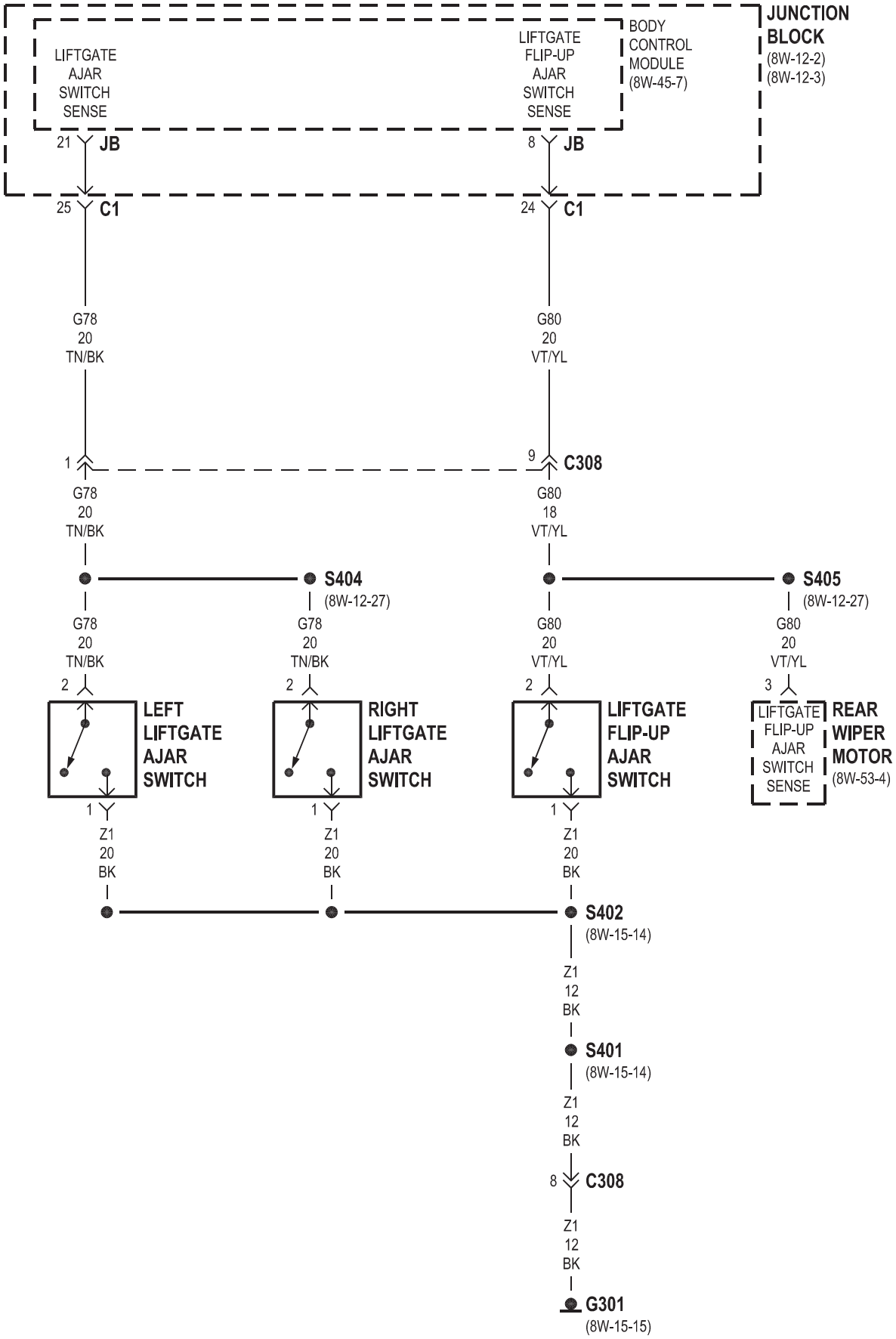
JUNCTION BLOCK
(8W-12-2)
(8W-12-3)
BODY CONTROL MODULE
(8W-45-7)
LIFTGATE AJAR SWITCH SENSE
LIFTGATE FLIP-UP AJAR SWITCH SENSE
21 JB
8 JB
25 C1
24 C1
G78 20 TN/BK
G80 20 VT/YL
1
9 C308
G78 20 TN/BK
G80 18 VT/YL
S404
(8W-12-27)
S405
(8W-12-27)
G78 20 TN/BK
G78 20 TN/BK
G80 20 VT/YL
G80 20 VT/YL
2
2
2
3
LEFT LIFTGATE AJAR SWITCH
RIGHT LIFTGATE AJAR SWITCH
LIFTGATE FLIP-UP AJAR SWITCH
LIFTGATE FLIP-UP AJAR SWITCH SENSE
REAR WIPER MOTOR
(8W-53-4)
1
1
1
Z1 20 BK
Z1 20 BK
Z1 20 BK
S402
(8W-15-14)
Z1 12 BK
S401
(8W-15-14)
Z1 12 BK
8 C308
Z1 12 BK
G301
(8W-15-15)

8W-62 POWER MIRRORS

Component	Page
Automatic Day/Night Mirror	8W-62-5
Body Control Module	8W-62-2
Diagnostic Junction Port	8W-62-2
Driver Door Module	8W-62-2, 3, 5
Driver Front Door Courtesy Lamp	8W-62-3
Driver Power Mirror	8W-62-5
G300	8W-62-2
Junction Block	8W-62-2
Memory Set Switch	8W-62-3
Passenger Door Module	8W-62-2, 4
Passenger Front Door Courtesy Lamp	8W-62-4
Passenger Power Mirror	8W-62-4

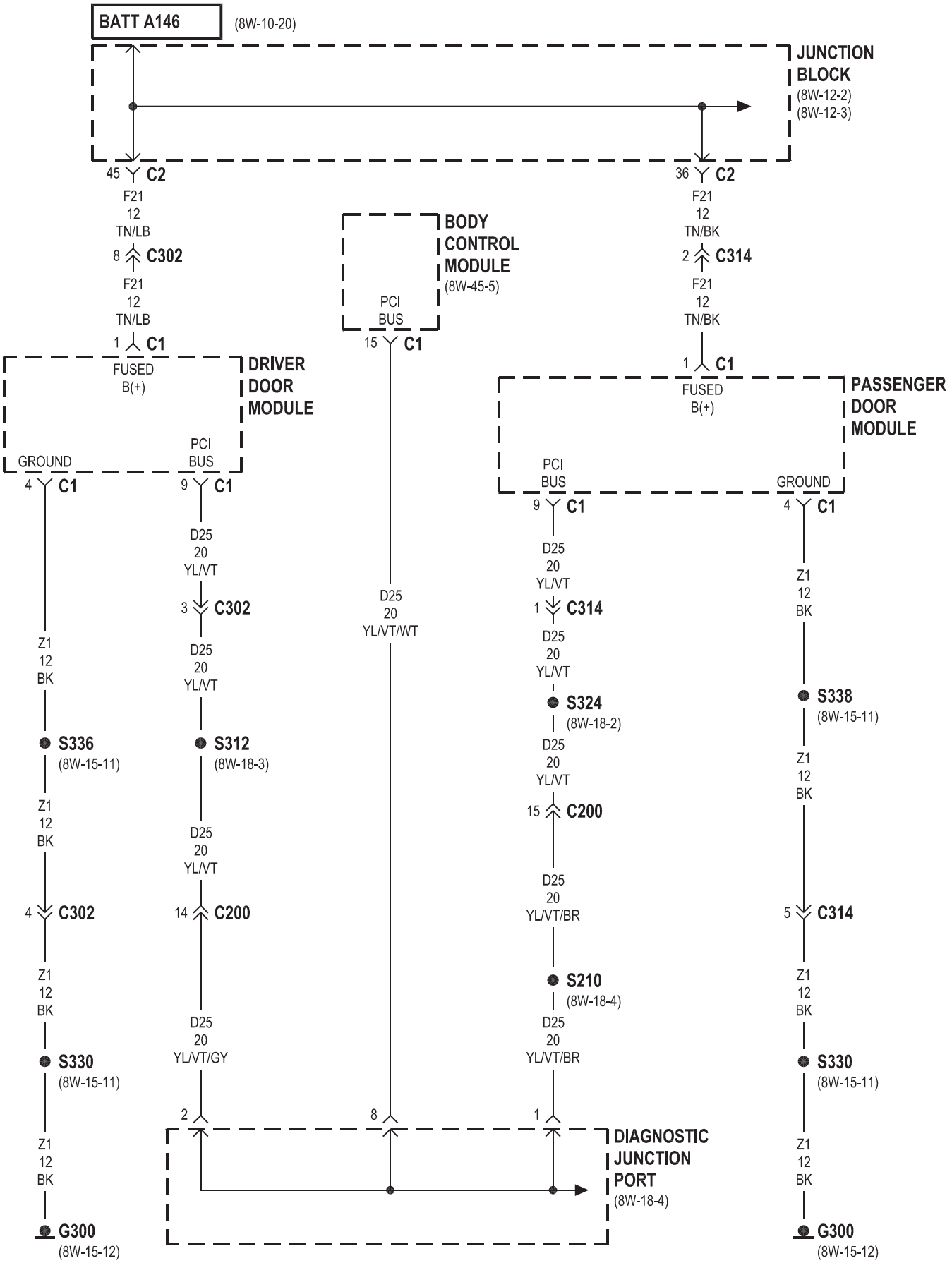
BATT A146
(8W-10-20)
JUNCTION BLOCK
(8W-12-2)
(8W-12-3)
45 C2
F21
12
TN/LB
8 C302
F21
12
TN/LB
1 C1
FUSED
B(+)
36 C2
F21
12
TN/BK
2 C314
F21
12
TN/BK
1 C1
FUSED
B(+)
BODY CONTROL MODULE
(8W-45-5)
PCI
BUS
15 C1
DRIVER DOOR MODULE
GROUND
4 C1
PCI
BUS
9 C1
PASSENGER DOOR MODULE
PCI
BUS
9 C1
GROUND
4 C1
D25
20
YL/VT
3 C302
D25
20
YL/VT
D25
20
YL/VT/WT
D25
20
YL/VT
1 C314
D25
20
YL/VT
Z1
12
BK
S336
(8W-15-11)
S312
(8W-18-3)
S324
(8W-18-2)
S338
(8W-15-11)
Z1
12
BK
D25
20
YL/VT
15 C200
Z1
12
BK
Z1
12
BK
4 C302
14 C200
D25
20
YL/VT/BR
5 C314
Z1
12
BK
S210
(8W-18-4)
Z1
12
BK
S330
(8W-15-11)
D25
20
YL/VT/GY
D25
20
YL/VT/BR
S330
(8W-15-11)
2
8
1
DIAGNOSTIC JUNCTION PORT
(8W-18-4)
Z1
12
BK
Z1
12
BK
G300
(8W-15-12)
G300
(8W-15-12)

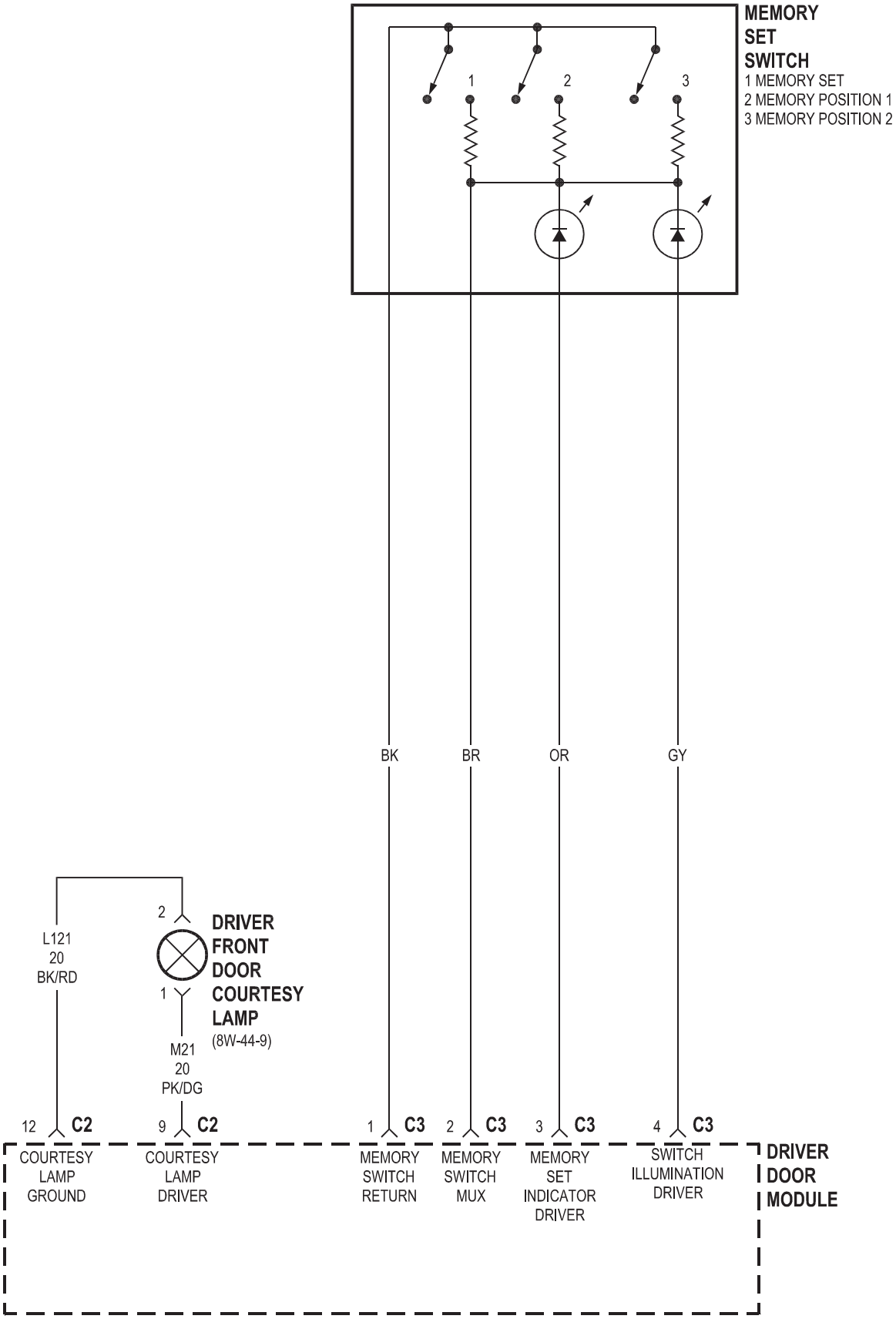
MEMORY
SET
SWITCH
1 MEMORY SET
2 MEMORY POSITION 1
3 MEMORY POSITION 2
1
2
3
BK
BR
OR
GY
L121
20
BK/RD
2
1
DRIVER
FRONT
DOOR
COURTESY
LAMP
(8W-44-9)
M21
20
PK/DG
12 C2
COURTESY
LAMP
GROUND
9 C2
COURTESY
LAMP
DRIVER
1 C3
MEMORY
SWITCH
RETURN
2 C3
MEMORY
SWITCH
MUX
3 C3
MEMORY
SET
INDICATOR
DRIVER
4 C3
SWITCH
ILLUMINATION
DRIVER
DRIVER
DOOR
MODULE

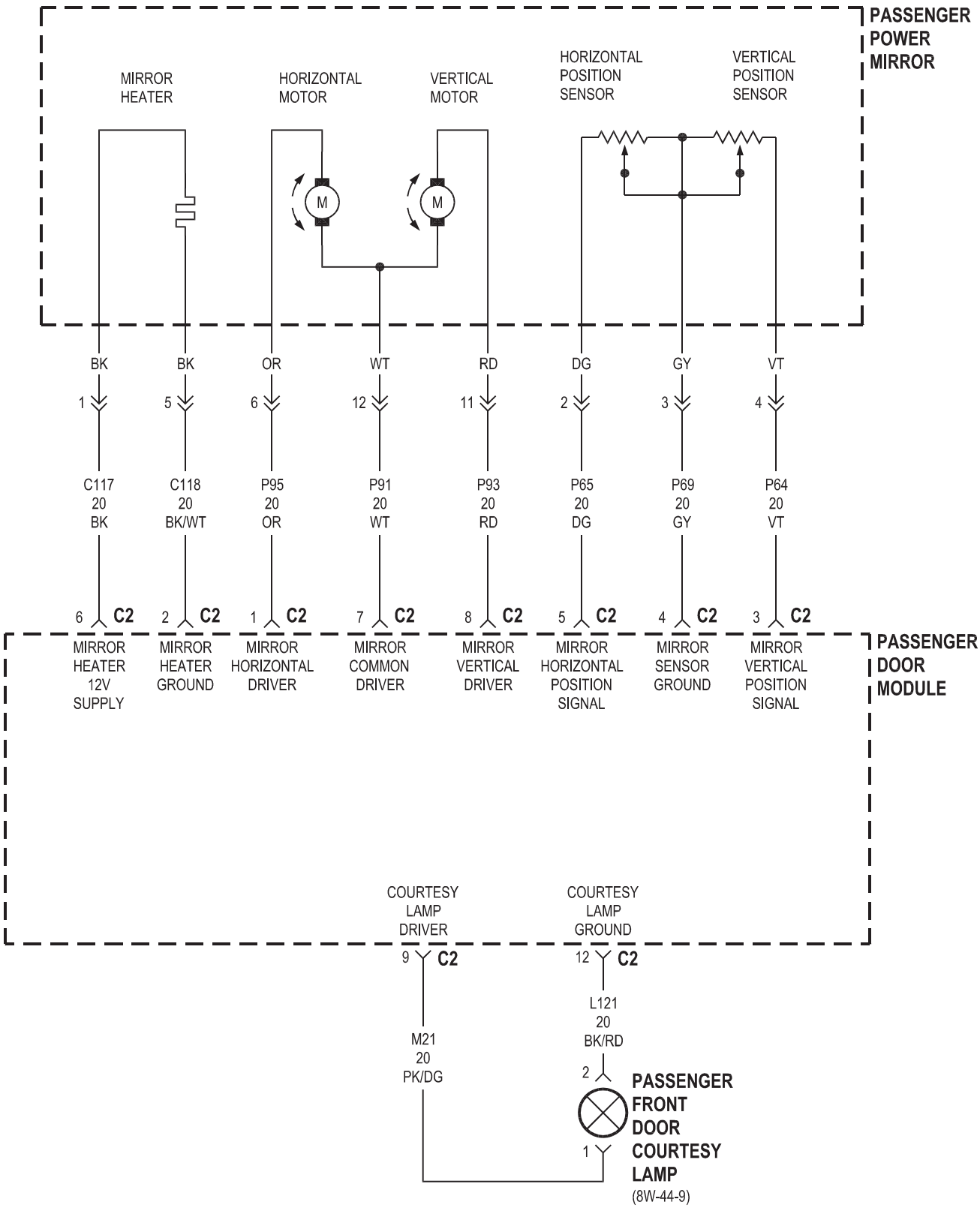
PASSENGER POWER MIRROR
MIRROR HEATER
HORIZONTAL MOTOR
VERTICAL MOTOR
HORIZONTAL POSITION SENSOR
VERTICAL POSITION SENSOR
M
M
BK
BK
OR
WT
RD
DG
GY
VT
1
5
6
12
11
2
3
4
C117 20 BK
C118 20 BK/WT
P95 20 OR
P91 20 WT
P93 20 RD
P65 20 DG
P69 20 GY
P64 20 VT
6 C2
2 C2
1 C2
7 C2
8 C2
5 C2
4 C2
3 C2
MIRROR HEATER 12V SUPPLY
MIRROR HEATER GROUND
MIRROR HORIZONTAL DRIVER
MIRROR COMMON DRIVER
MIRROR VERTICAL DRIVER
MIRROR HORIZONTAL POSITION SIGNAL
MIRROR SENSOR GROUND
MIRROR VERTICAL POSITION SIGNAL
PASSENGER DOOR MODULE
COURTESY LAMP DRIVER
COURTESY LAMP GROUND
9 C2
12 C2
M21 20 PK/DG
L121 20 BK/RD
2
1
PASSENGER FRONT DOOR COURTESY LAMP
(8W-44-9)

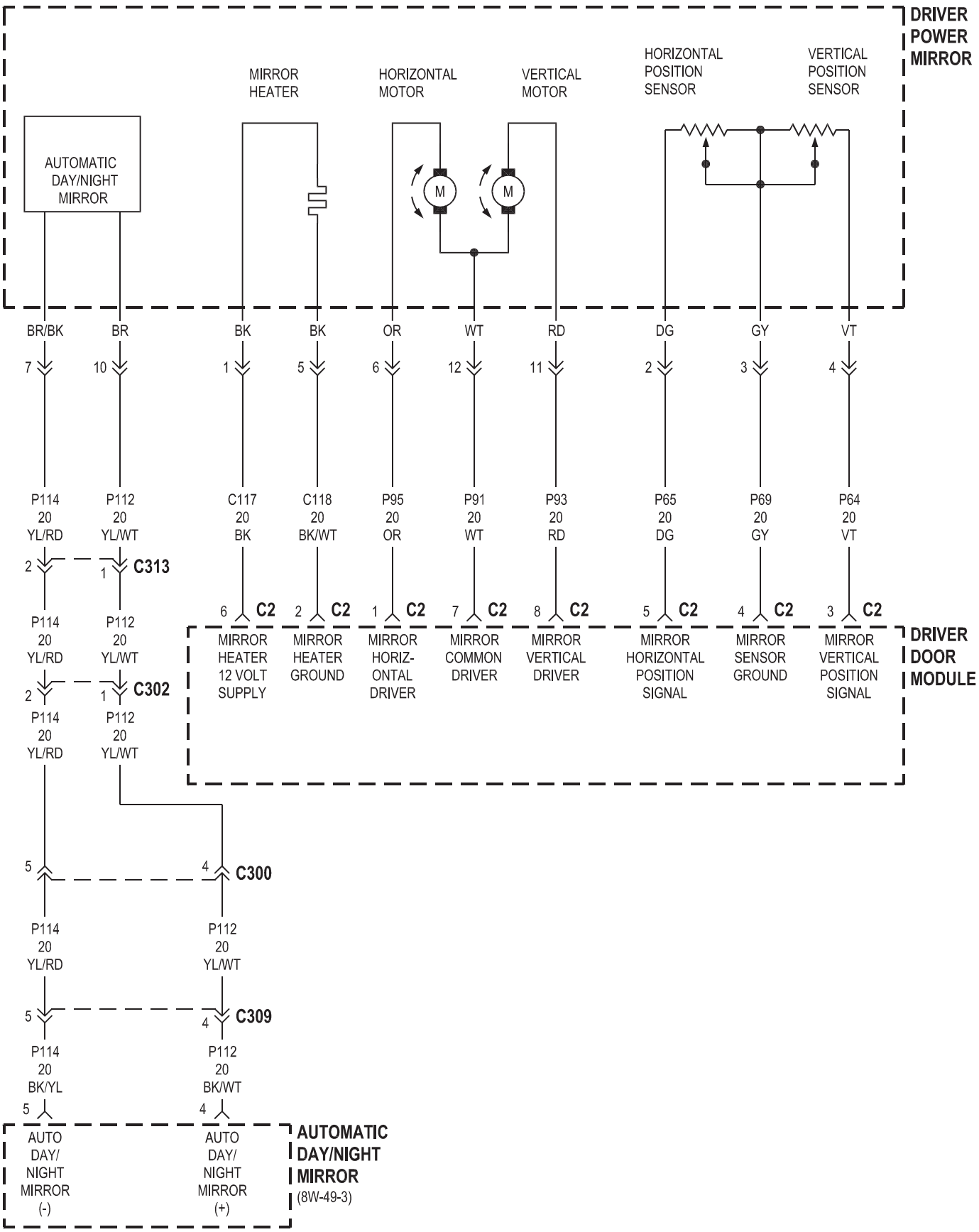
DRIVER POWER MIRROR
MIRROR HEATER
HORIZONTAL MOTOR
VERTICAL MOTOR
HORIZONTAL POSITION SENSOR
VERTICAL POSITION SENSOR
AUTOMATIC DAY/NIGHT MIRROR
M
M
BR/BK
BR
BK
BK
OR
WT
RD
DG
GY
VT
7
10
1
5
6
12
11
2
3
4
P114 20 YL/RD
P112 20 YL/WT
C117 20 BK
C118 20 BK/WT
P95 20 OR
P91 20 WT
P93 20 RD
P65 20 DG
P69 20 GY
P64 20 VT
2
1
C313
6
C2
2
C2
1
C2
7
C2
8
C2
5
C2
4
C2
3
C2
P114 20 YL/RD
P112 20 YL/WT
2
1
C302
P114 20 YL/RD
P112 20 YL/WT
MIRROR HEATER 12 VOLT SUPPLY
MIRROR HEATER GROUND
MIRROR HORIZ-ONTAL DRIVER
MIRROR COMMON DRIVER
MIRROR VERTICAL DRIVER
MIRROR HORIZONTAL POSITION SIGNAL
MIRROR SENSOR GROUND
MIRROR VERTICAL POSITION SIGNAL
DRIVER DOOR MODULE
5
4
C300
P114 20 YL/RD
P112 20 YL/WT
5
4
C309
P114 20 BK/YL
P112 20 BK/WT
5
4
AUTO DAY/ NIGHT MIRROR (-)
AUTO DAY/ NIGHT MIRROR (+)
AUTOMATIC DAY/NIGHT MIRROR
(8W-49-3)

8W-63 POWER SEAT

Component	Page
Body Control Module	8W-63-10
Circuit Breaker No. 2 (JB)	8W-63-2, 3, 4, 9
Driver Door Module	8W-63-3
Driver Heated Seat Back	8W-63-6
Driver Heated Seat Cushion	8W-63-6
Driver Heated Seat Switch	8W-63-10
Driver Lumbar Motor	8W-63-9
Driver Lumbar Switch	8W-63-9
Driver Power Seat Front Riser Motor	8W-63-2, 5
Driver Power Seat Front Riser Motor Sensor	8W-63-7
Driver Power Seat Horizontal Motor	8W-63-2, 5
Driver Power Seat Horizontal Motor Sensor	8W-63-7, 8
Driver Power Seat Rear Riser Motor	8W-63-2, 5
Driver Power Seat Rear Riser Motor Sensor	8W-63-7
Driver Power Seat Recliner Motor	8W-63-2, 5
Driver Power Seat Recliner Motor Sensor	8W-63-7, 8
Driver Power Seat Switch	8W-63-2, 5
Fuse 20 (JB)	8W-63-10
G200	8W-63-10
G300	8W-63-4, 9
G301	8W-63-2, 3, 5, 9
Junction Block	8W-63-2, 3, 4, 9, 10
Memory Set Switch	8W-63-3
Passenger Heated Seat Back	8W-63-6
Passenger Heated Seat Cushion	8W-63-6
Passenger Heated Seat Switch	8W-63-10
Passenger Lumbar Motor	8W-63-9
Passenger Lumbar Switch	8W-63-9
Passenger Power Seat Front Riser Motor	8W-63-4
Passenger Power Seat Horizontal Motor	8W-63-4
Passenger Power Seat Rear Riser Motor	8W-63-4
Passenger Power Seat Recliner Motor	8W-63-4
Passenger Power Seat Switch	8W-63-4
Seat Module	8W-63-3, 5, 6, 7, 8

MIDLINE/PREMIUM I

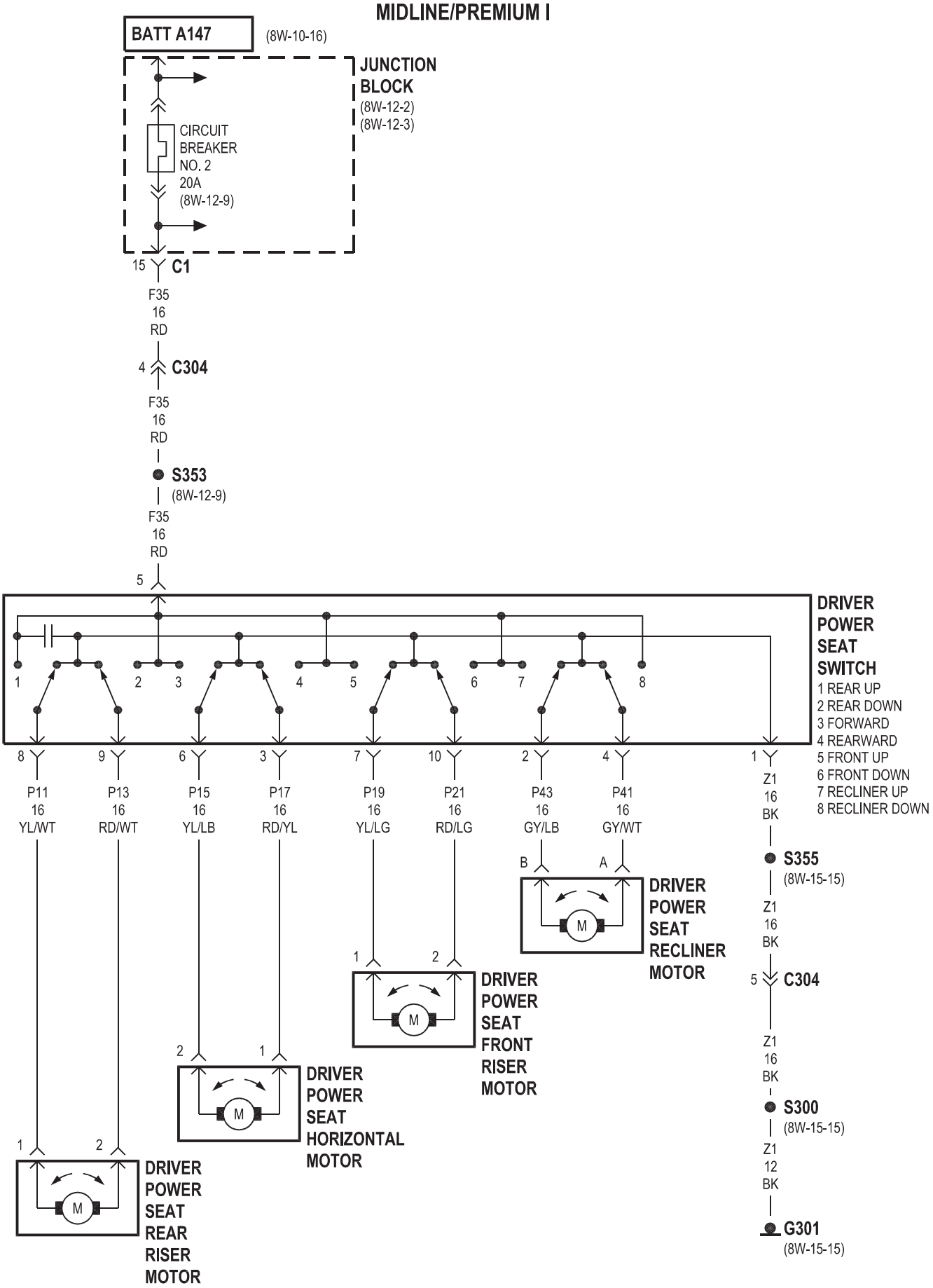

PREMIUM I/II/III

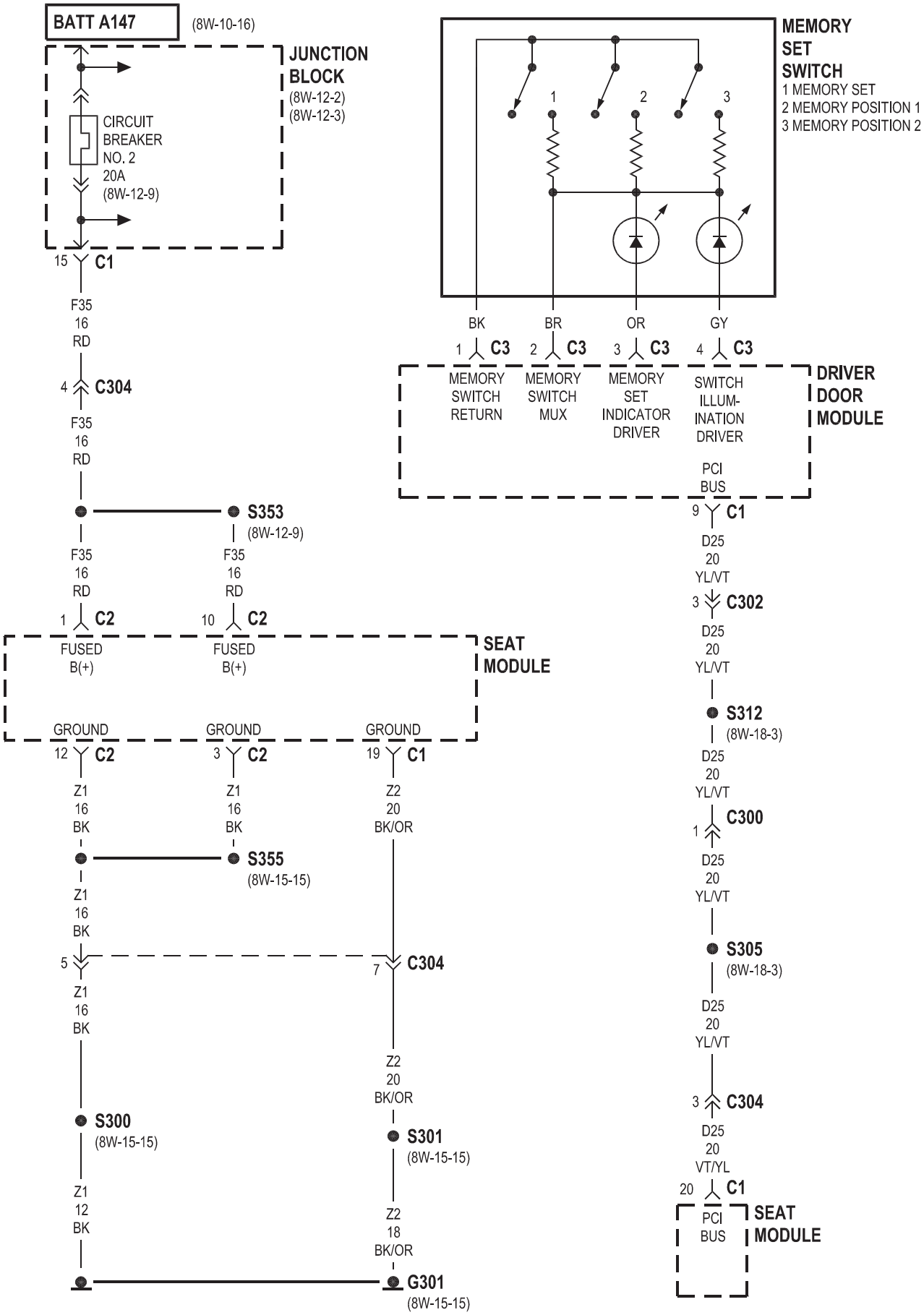

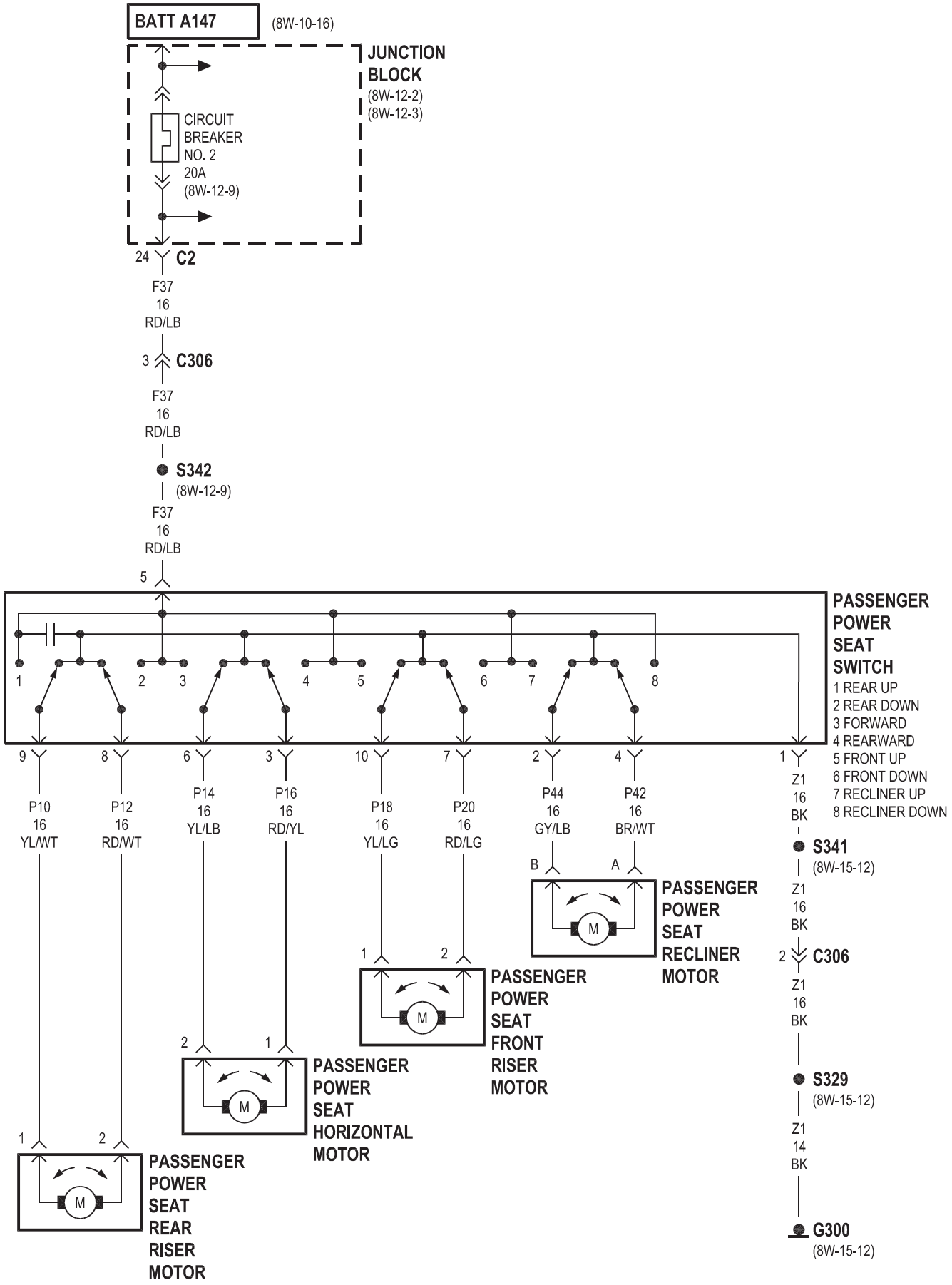
BATT A147
(8W-10-16)
JUNCTION BLOCK
(8W-12-2)
(8W-12-3)
CIRCUIT BREAKER NO. 2 20A
(8W-12-9)
24
C2
F37 16 RD/LB
3
C306
F37 16 RD/LB
S342
(8W-12-9)
F37 16 RD/LB
5
PASSENGER POWER SEAT SWITCH
1 REAR UP
2 REAR DOWN
3 FORWARD
4 REARWARD
5 FRONT UP
6 FRONT DOWN
7 RECLINER UP
8 RECLINER DOWN
9
8
6
3
10
7
2
4
1
P10 16 YL/WT
P12 16 RD/WT
P14 16 YL/LB
P16 16 RD/YL
P18 16 YL/LG
P20 16 RD/LG
P44 16 GY/LB
P42 16 BR/WT
Z1 16 BK
S341
(8W-15-12)
Z1 16 BK
2
C306
Z1 16 BK
S329
(8W-15-12)
Z1 14 BK
G300
(8W-15-12)
B
A
PASSENGER POWER SEAT RECLINER MOTOR
PASSENGER POWER SEAT FRONT RISER MOTOR
PASSENGER POWER SEAT HORIZONTAL MOTOR
PASSENGER POWER SEAT REAR RISER MOTOR
M

PREMIUM II/III

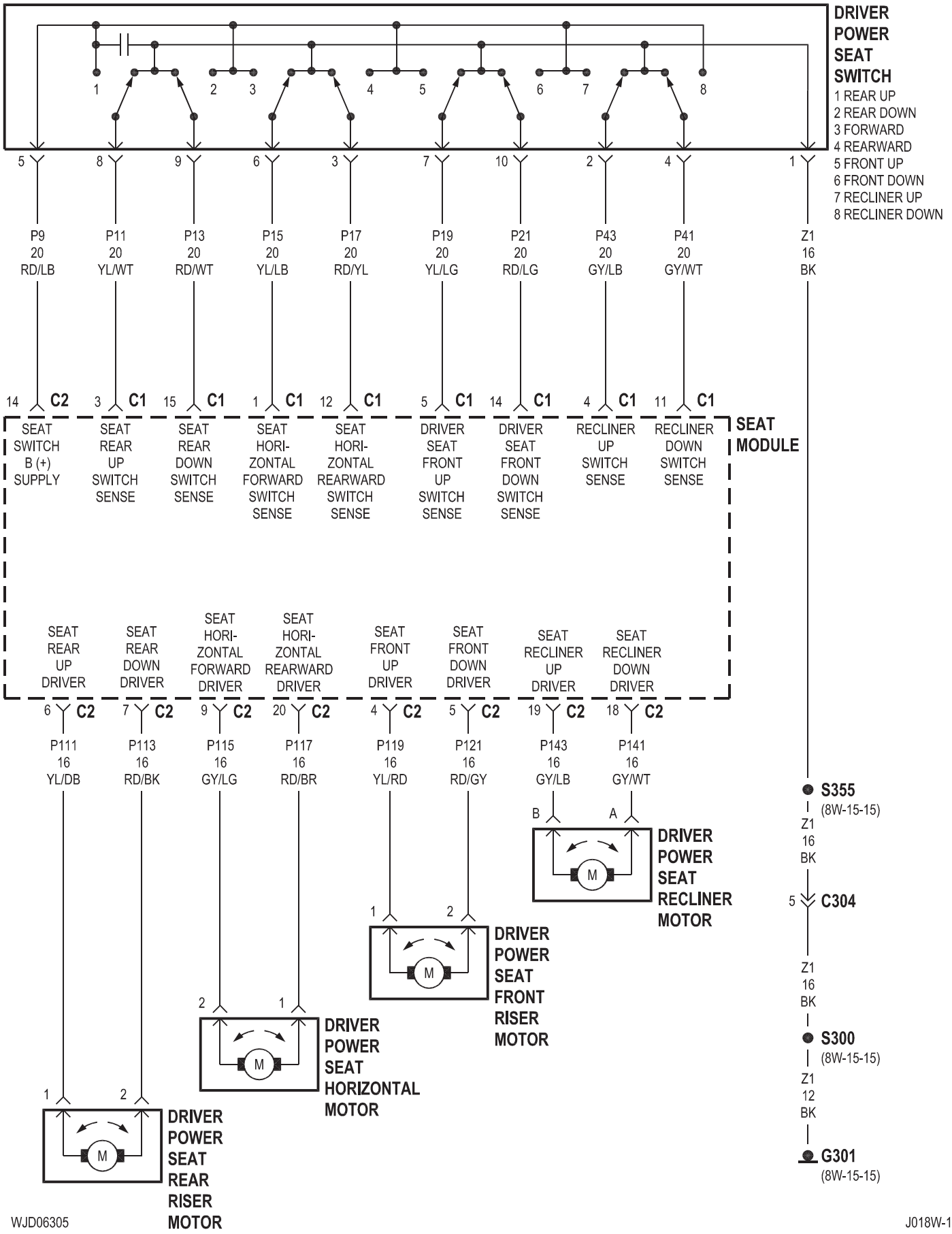

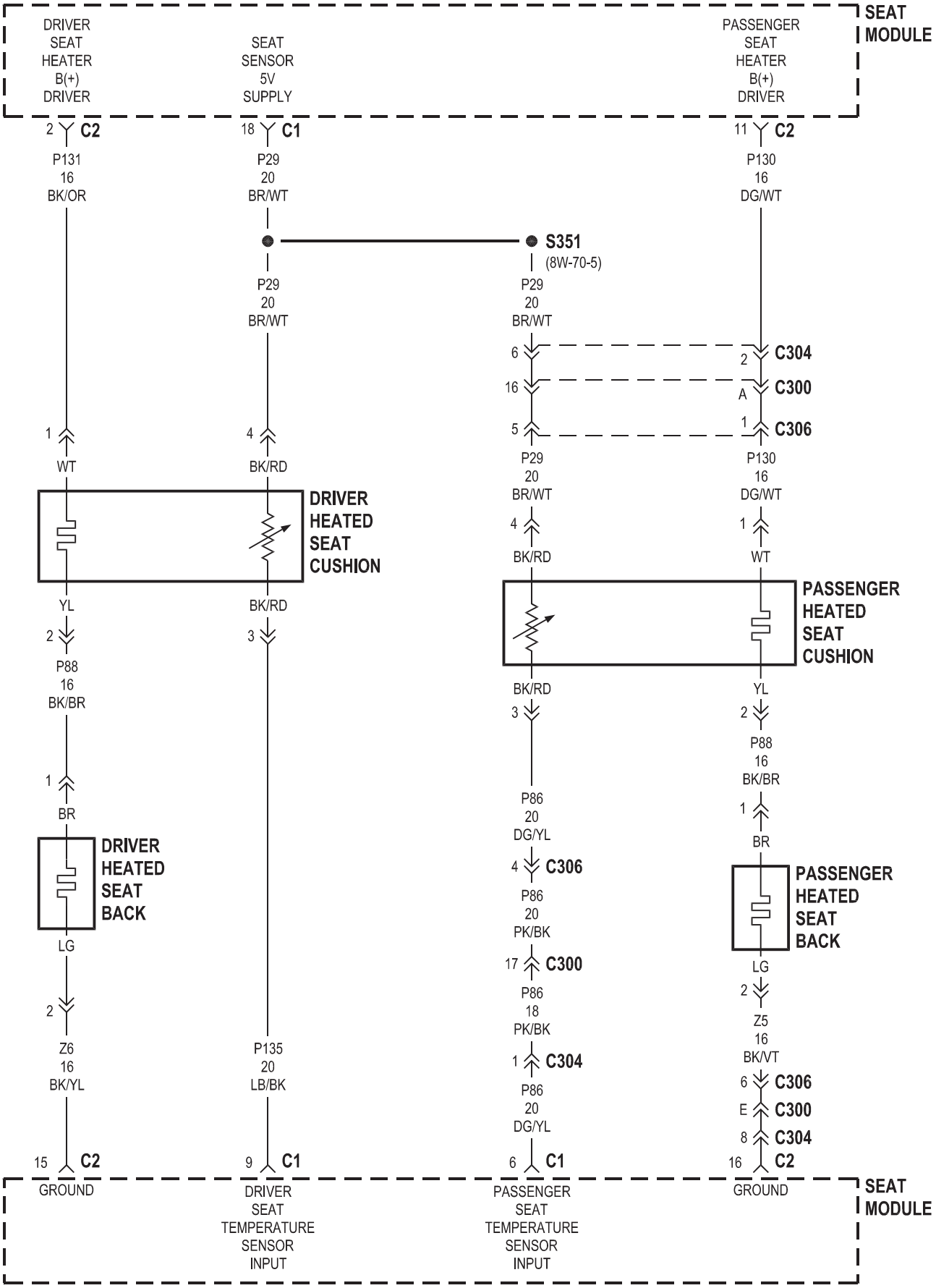
SEAT MODULE
DRIVER SEAT HEATER B(+) DRIVER
SEAT SENSOR 5V SUPPLY
PASSENGER SEAT HEATER B(+) DRIVER
2 C2
18 C1
11 C2
P131 16 BK/OR
P29 20 BR/WT
P130 16 DG/WT
S351
(8W-70-5)
P29 20 BR/WT
6
2 C304
16
A C300
5
1 C306
1
4
WT
BK/RD
DRIVER HEATED SEAT CUSHION
YL
BK/RD
2
3
P88 16 BK/BR
1
BR
DRIVER HEATED SEAT BACK
LG
2
Z6 16 BK/YL
P135 20 LB/BK
15 C2
9 C1
GROUND
DRIVER SEAT TEMPERATURE SENSOR INPUT
P29 20 BR/WT
4
BK/RD
P130 16 DG/WT
1
WT
PASSENGER HEATED SEAT CUSHION
BK/RD
3
YL
2
P88 16 BK/BR
1
BR
PASSENGER HEATED SEAT BACK
LG
2
Z5 16 BK/VT
P86 20 DG/YL
4 C306
P86 20 PK/BK
17 C300
P86 18 PK/BK
1 C304
P86 20 DG/YL
6 C1
PASSENGER SEAT TEMPERATURE SENSOR INPUT
6 C306
E C300
8 C304
16 C2
GROUND
SEAT MODULE

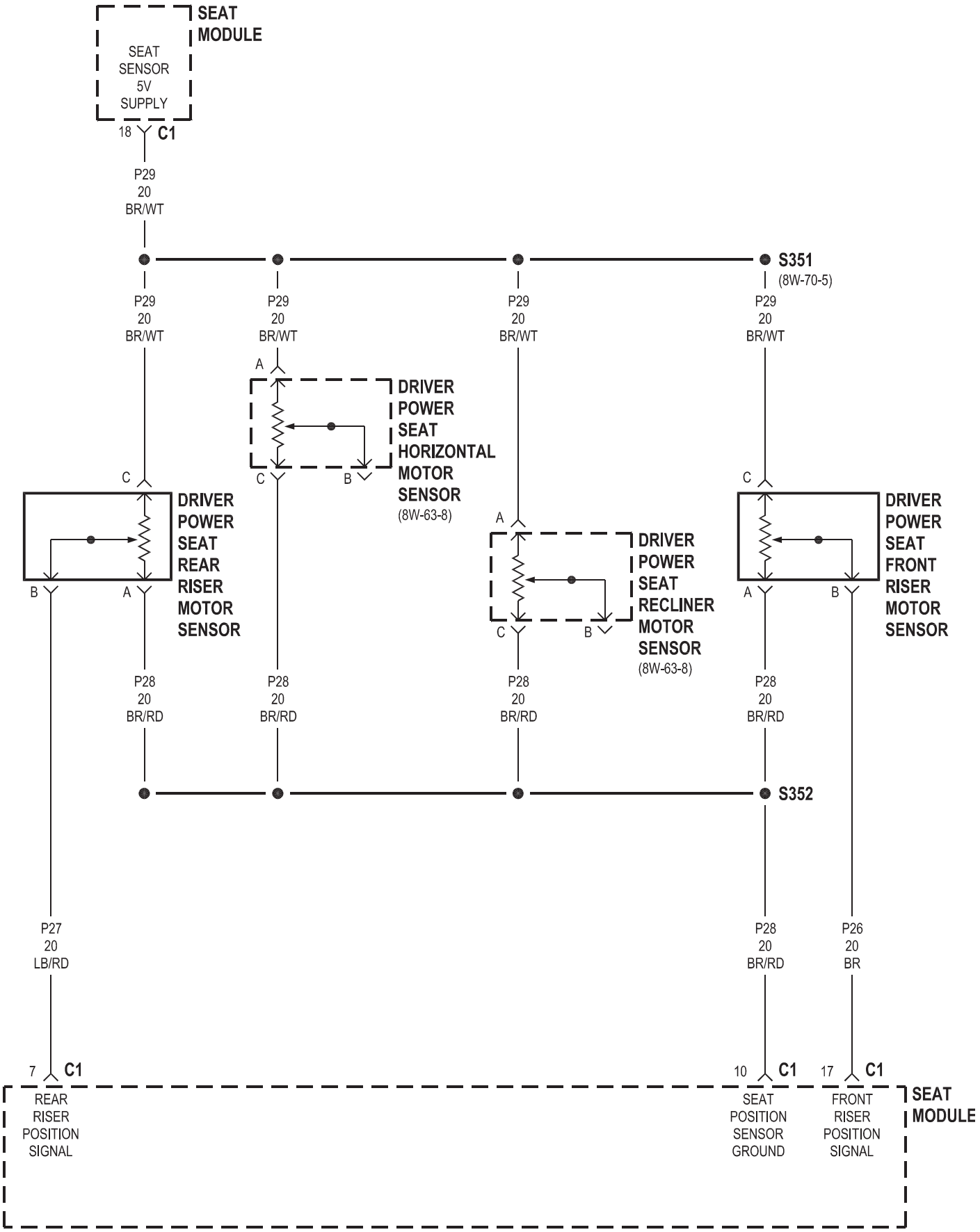
SEAT MODULE
SEAT SENSOR 5V SUPPLY
18
C1
P29 20 BR/WT
S351
(8W-70-5)
P29 20 BR/WT
P29 20 BR/WT
P29 20 BR/WT
P29 20 BR/WT
A
DRIVER POWER SEAT HORIZONTAL MOTOR SENSOR
(8W-63-8)
C
B
C
DRIVER POWER SEAT REAR RISER MOTOR SENSOR
B
A
A
DRIVER POWER SEAT RECLINER MOTOR SENSOR
(8W-63-8)
C
B
C
DRIVER POWER SEAT FRONT RISER MOTOR SENSOR
A
B
P28 20 BR/RD
P28 20 BR/RD
P28 20 BR/RD
P28 20 BR/RD
S352
P27 20 LB/RD
P28 20 BR/RD
P26 20 BR
7
C1
10
C1
17
C1
REAR RISER POSITION SIGNAL
SEAT POSITION SENSOR GROUND
FRONT RISER POSITION SIGNAL
SEAT MODULE

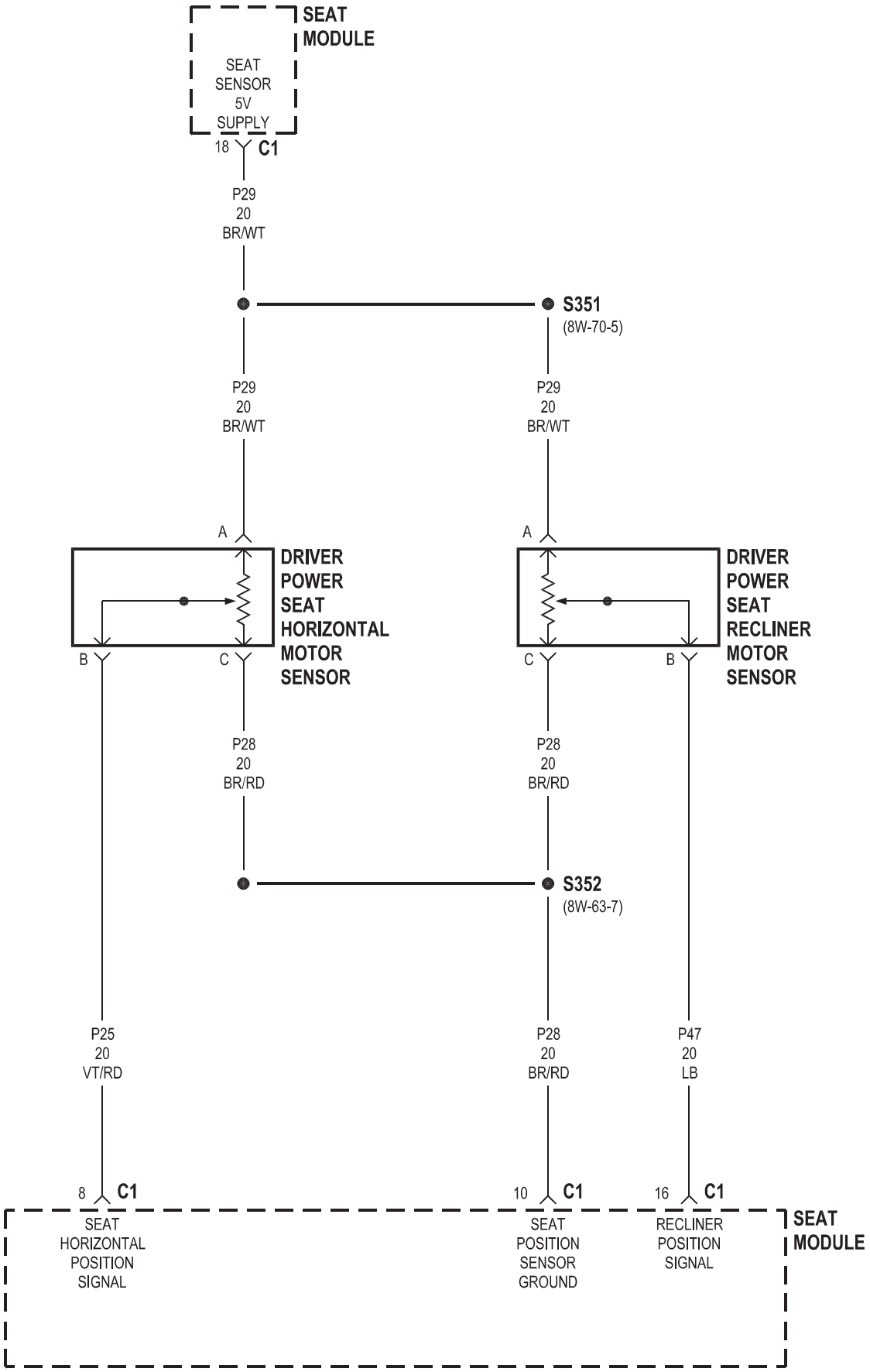
SEAT MODULE
SEAT SENSOR 5V SUPPLY
18
C1
P29
20
BR/WT
S351
(8W-70-5)
P29
20
BR/WT
P29
20
BR/WT
A
A
DRIVER POWER SEAT HORIZONTAL MOTOR SENSOR
DRIVER POWER SEAT RECLINER MOTOR SENSOR
B
C
C
B
P28
20
BR/RD
P28
20
BR/RD
S352
(8W-63-7)
P25
20
VT/RD
P28
20
BR/RD
P47
20
LB
8
C1
10
C1
16
C1
SEAT HORIZONTAL POSITION SIGNAL
SEAT POSITION SENSOR GROUND
RECLINER POSITION SIGNAL
SEAT MODULE

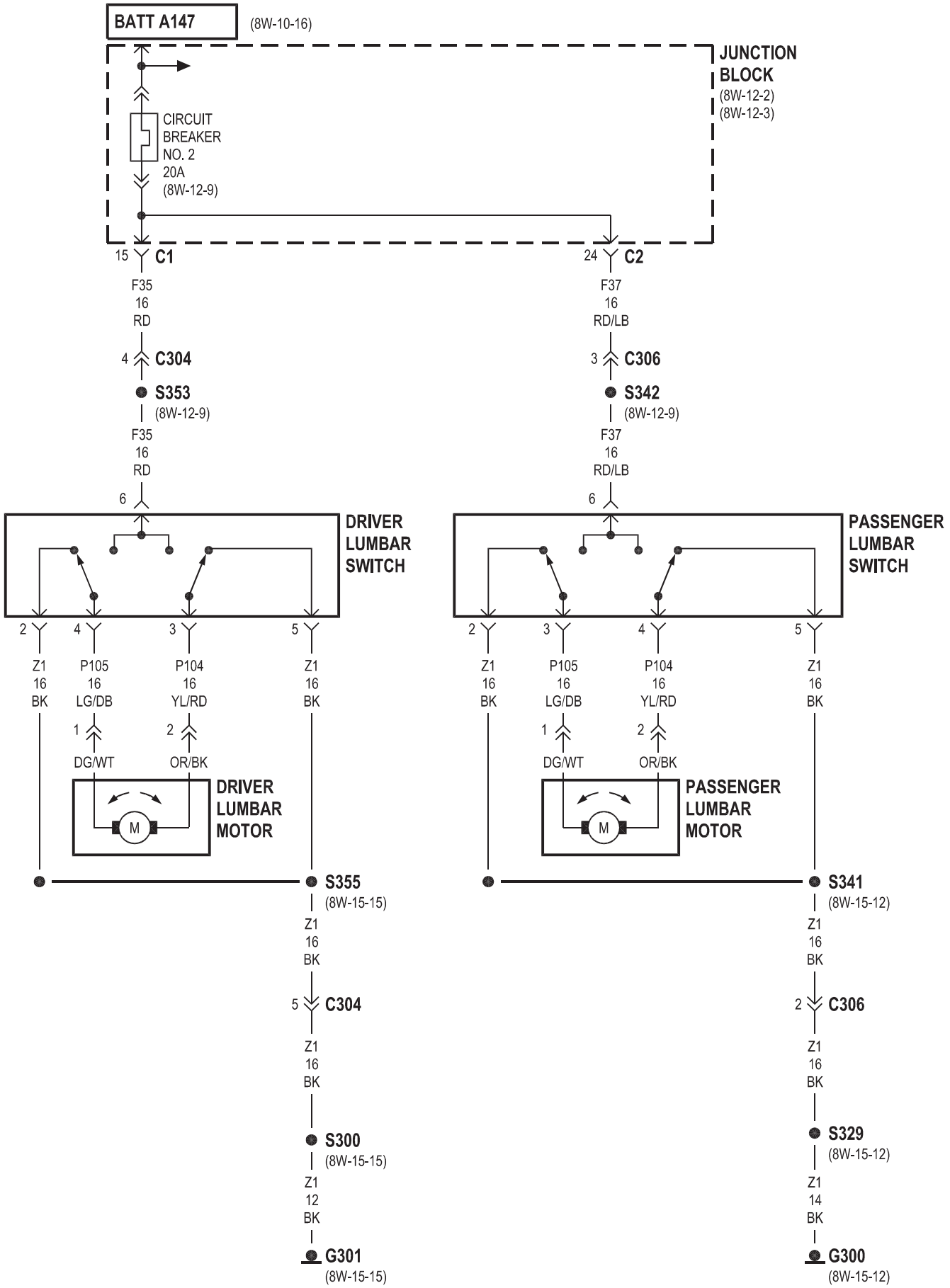
BATT A147
(8W-10-16)
JUNCTION BLOCK
(8W-12-2)
(8W-12-3)
CIRCUIT BREAKER NO. 2 20A
(8W-12-9)
15 C1
24 C2
F35 16 RD
F37 16 RD/LB
4 C304
3 C306
S353
(8W-12-9)
S342
(8W-12-9)
F35 16 RD
F37 16 RD/LB
6
6
DRIVER LUMBAR SWITCH
PASSENGER LUMBAR SWITCH
2 4 3 5
2 3 4 5
Z1 16 BK
P105 16 LG/DB
P104 16 YL/RD
Z1 16 BK
1 2
DG/WT
OR/BK
DRIVER LUMBAR MOTOR
PASSENGER LUMBAR MOTOR
M
S355
(8W-15-15)
S341
(8W-15-12)
Z1 16 BK
5 C304
2 C306
S300
(8W-15-15)
S329
(8W-15-12)
Z1 12 BK
Z1 14 BK
G301
(8W-15-15)
G300
(8W-15-12)

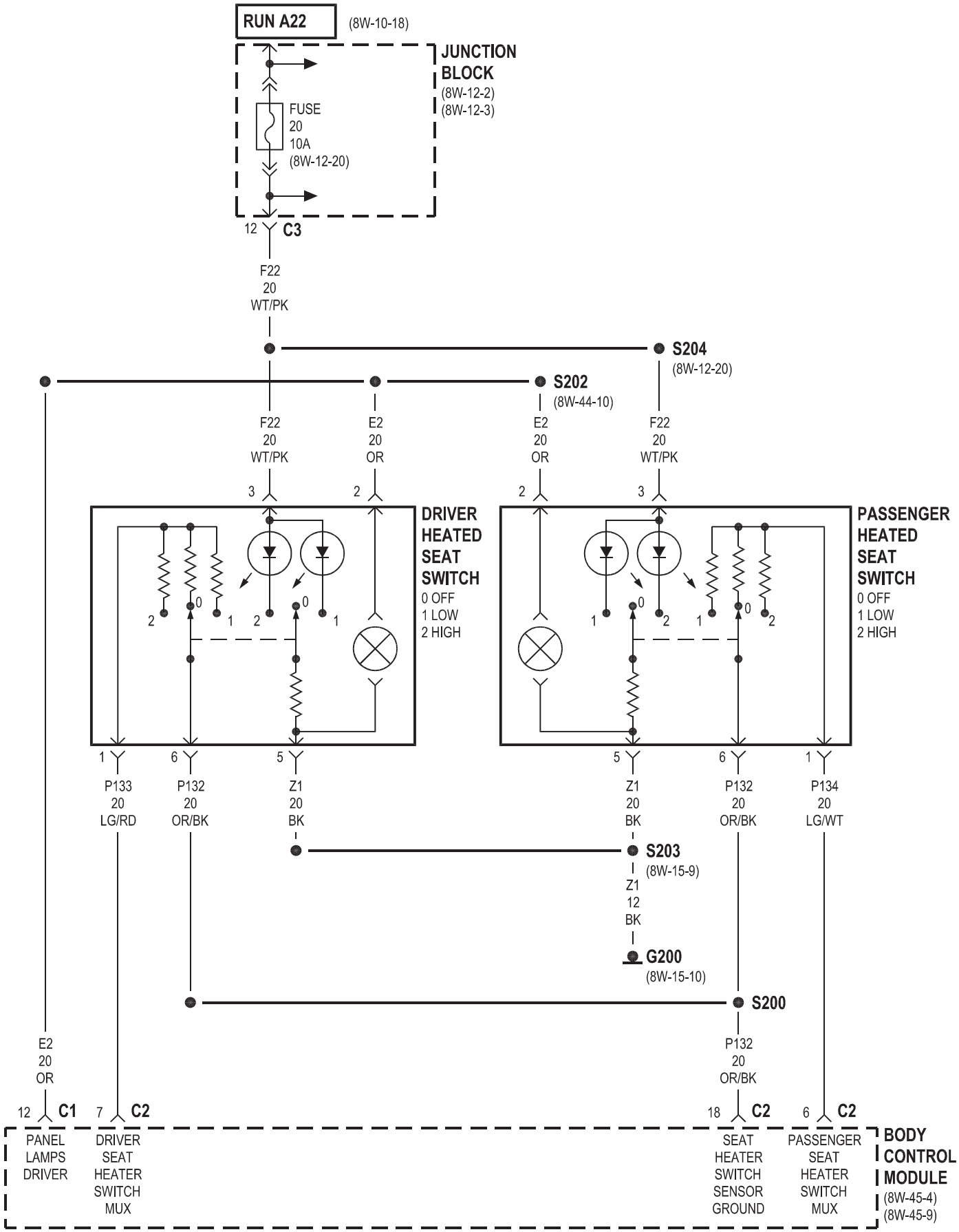
RUN A22
(8W-10-18)
JUNCTION BLOCK
(8W-12-2)
(8W-12-3)
FUSE
20
10A
(8W-12-20)
12
C3
F22
20
WT/PK
S204
(8W-12-20)
S202
(8W-44-10)
F22
20
WT/PK
E2
20
OR
E2
20
OR
F22
20
WT/PK
DRIVER HEATED SEAT SWITCH
0 OFF
1 LOW
2 HIGH
PASSENGER HEATED SEAT SWITCH
0 OFF
1 LOW
2 HIGH
P133
20
LG/RD
P132
20
OR/BK
Z1
20
BK
Z1
20
BK
P132
20
OR/BK
P134
20
LG/WT
S203
(8W-15-9)
Z1
12
BK
G200
(8W-15-10)
S200
P132
20
OR/BK
E2
20
OR
C1
C2
C2
C2
PANEL LAMPS DRIVER
DRIVER SEAT HEATER SWITCH MUX
SEAT HEATER SWITCH SENSOR GROUND
PASSENGER SEAT HEATER SWITCH MUX
BODY CONTROL MODULE
(8W-45-4)
(8W-45-9)

8W-64 POWER SUNROOF

Component	Page
Body Control Module	8W-64-2
Fuse 25 (JB)	8W-64-2
G301	8W-64-2, 3
Junction Block	8W-64-2
Sunroof Control Module	8W-64-2, 3
Sunroof Delay Relay	8W-64-2
Sunroof Motor	8W-64-2
Sunroof Switch	8W-64-3

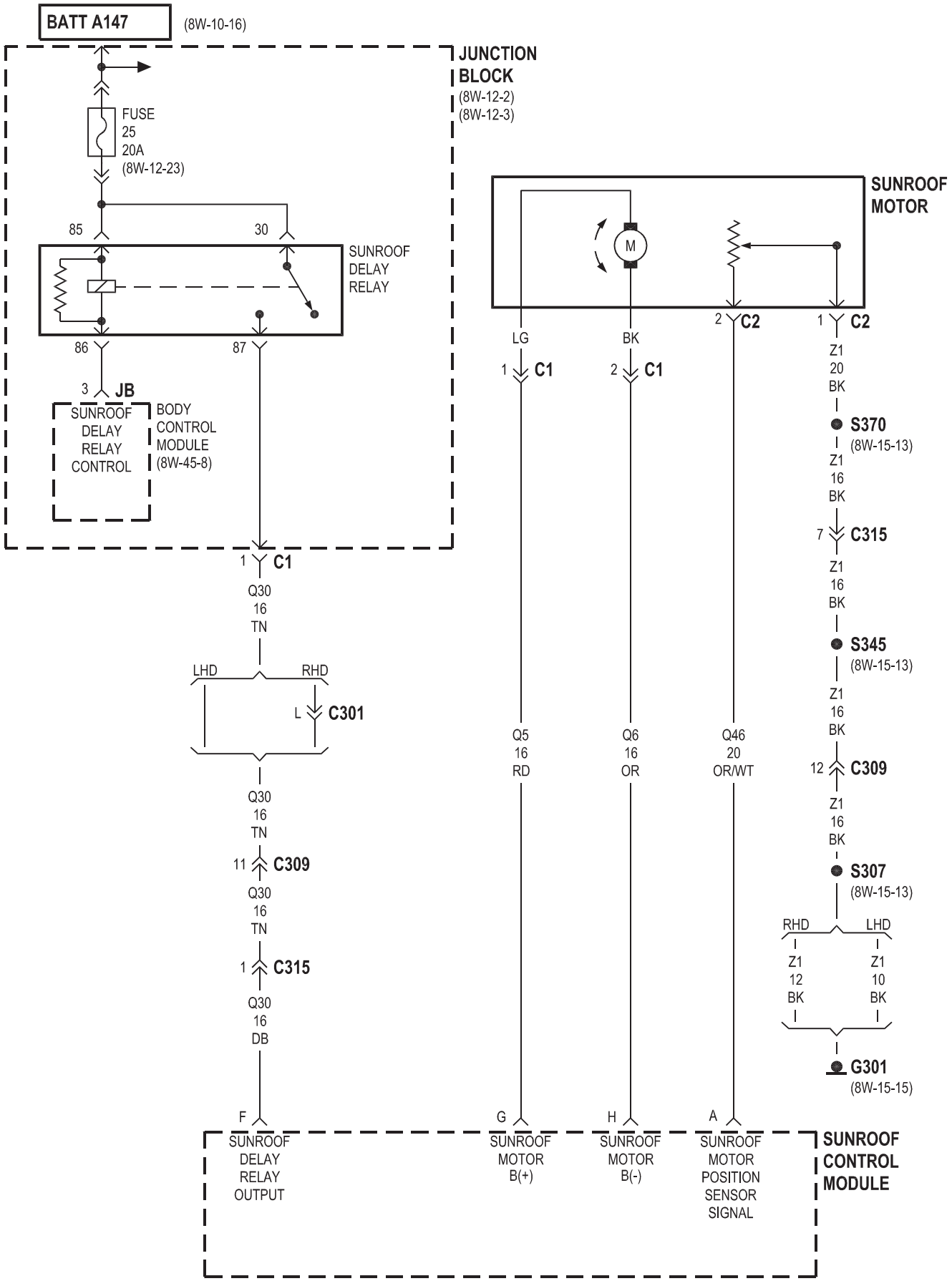
BATT A147
(8W-10-16)
JUNCTION BLOCK
(8W-12-2)
(8W-12-3)
FUSE
25
20A
(8W-12-23)
85
30
SUNROOF DELAY RELAY
86
87
3
JB
SUNROOF DELAY RELAY CONTROL
BODY CONTROL MODULE
(8W-45-8)
1
C1
Q30
16
TN
LHD
RHD
L
C301
Q30
16
TN
11
C309
Q30
16
TN
1
C315
Q30
16
DB
F
SUNROOF DELAY RELAY OUTPUT
SUNROOF MOTOR
M
LG
BK
1
C1
2
C1
2
C2
1
C2
Z1
20
BK
S370
(8W-15-13)
Z1
16
BK
7
C315
Z1
16
BK
S345
(8W-15-13)
Z1
16
BK
12
C309
Z1
16
BK
S307
(8W-15-13)
RHD
LHD
Z1
12
BK
Z1
10
BK
G301
(8W-15-15)
Q5
16
RD
Q6
16
OR
Q46
20
OR/WT
G
SUNROOF MOTOR B(+)
H
SUNROOF MOTOR B(-)
A
SUNROOF MOTOR POSITION SENSOR SIGNAL
SUNROOF CONTROL MODULE

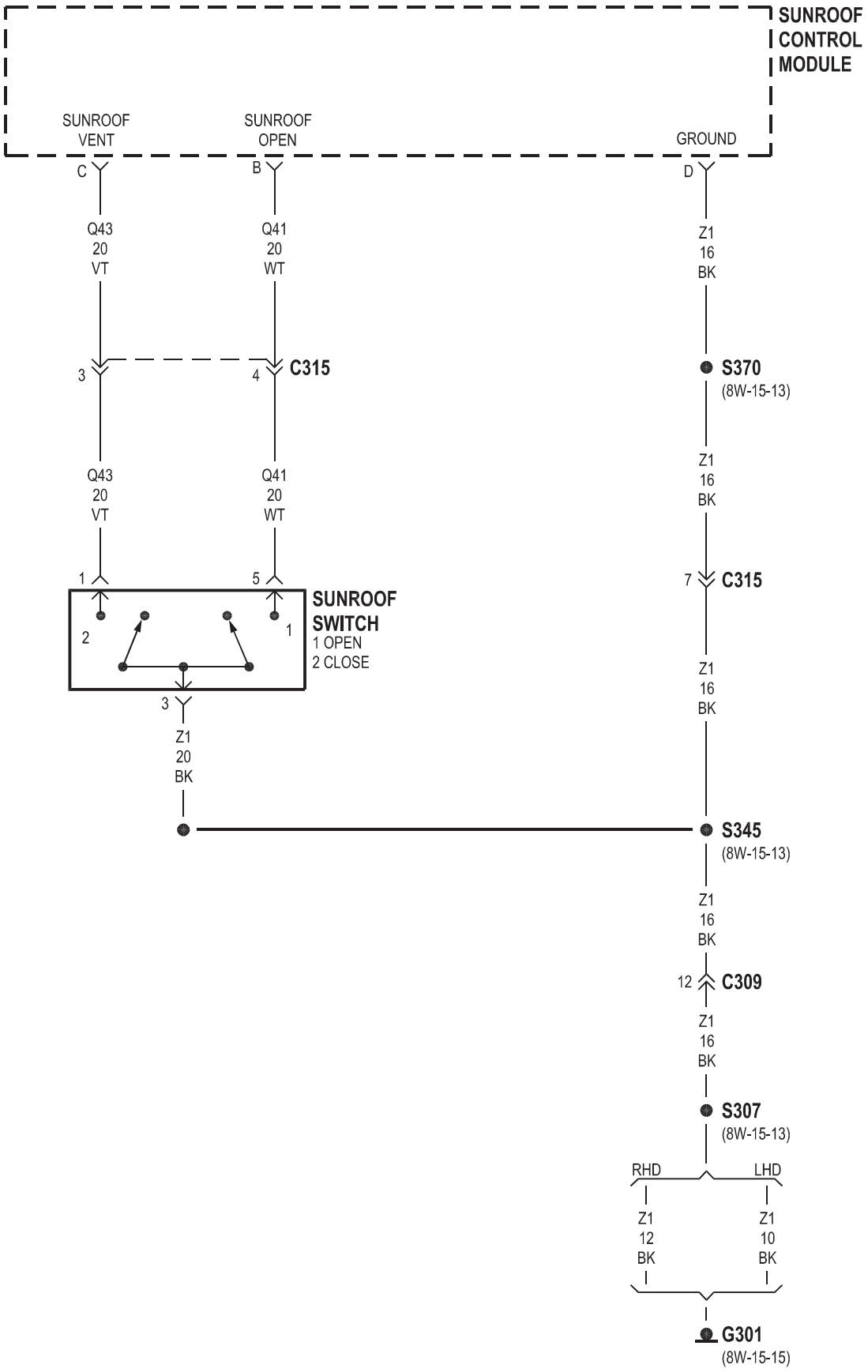
SUNROOF CONTROL MODULE
SUNROOF VENT
SUNROOF OPEN
GROUND
C
B
D
Q43 20 VT
Q41 20 WT
Z1 16 BK
3
4
C315
S370
(8W-15-13)
Q43 20 VT
Q41 20 WT
Z1 16 BK
1
5
7
C315
SUNROOF SWITCH
1 OPEN
2 CLOSE
2
1
3
Z1 16 BK
Z1 20 BK
S345
(8W-15-13)
Z1 16 BK
12
C309
Z1 16 BK
S307
(8W-15-13)
RHD
LHD
Z1 12 BK
Z1 10 BK
G301
(8W-15-15)

8W-70 SPLICE INFORMATION

Component	Page
S100	8W-10-7
S102	8W-30-17
S103	8W-15-3
S104	8W-15-3
S105	8W-30-16
S106	8W-10-12
S107	8W-70-2, 3
S109	8W-10-13
S110	8W-70-2
S111	8W-10-15
S112	8W-70-2, 3
S113	8W-31-11
S114	8W-15-2
S115	8W-10-11
S116	8W-12-17
S117	8W-12-28
S118	8W-10-14
S119	8W-31-8
S120	8W-30-16
S121	8W-10-13
S122	8W-31-4, 5
S123	8W-10-9, 12
S124	8W-10-14
S125	8W-30-5
S126	8W-30-19
S127	8W-10-17
S128	8W-10-12
S130	8W-18-2
S131	8W-70-4
S132	8W-15-6
S133	8W-15-6
S134	8W-15-4
S151	8W-15-3
S152	8W-15-5
S153	8W-12-13
S154	8W-12-29
S155	8W-12-29
S156	8W-12-13
S160	8W-30-8
S161	8W-12-26
S200	8W-63-10
S201	8W-15-10
S202	8W-44-10
S203	8W-15-9
S204	8W-12-20
S205	8W-15-10
S206	8W-12-20
S207	8W-12-15
S208	8W-44-8
S209	8W-12-11
S210	8W-18-4
S211	8W-15-8
S212	8W-53-2
S213	8W-33-4
S214	8W-33-4
S215	8W-47-10
S216	8W-47-10
S300	8W-15-15
S301	8W-15-15
S302	8W-61-5
S303	8W-61-5
S304	8W-12-15
S305	8W-18-3
S306	8W-12-25
S307	8W-15-13
S309	8W-12-12
S310	8W-51-5
S311	8W-51-4
S312	8W-18-3
S313	8W-51-4
S314	8W-30-26
S315	8W-70-4
S316	8W-12-17
S317	8W-61-5
S318	8W-61-5
S319	8W-12-19
S324	8W-18-2
S325	8W-12-28
S326	8W-12-12
S327	8W-12-29
S328	8W-51-5
S329	8W-15-12
S330	8W-15-11
S331	8W-15-12
S332	8W-15-12
S334	8W-12-11
S336	8W-15-11
S338	8W-15-11
S339	8W-61-5
S340	8W-61-5
S341	8W-15-12
S342	8W-12-9
S345	8W-15-13
S346	8W-12-15
S347	8W-12-27
S348	8W-12-19
S349	8W-12-21
S351	8W-70-5
S352	8W-63-7
S353	8W-12-9
S355	8W-15-15
S356	8W-15-15
S357	8W-15-11
S360	8W-47-4
S361	8W-47-4
S362	8W-47-4
S363	8W-47-4
S370	8W-15-13
S400	8W-12-16
S401	8W-15-14
S402	8W-15-14
S403	8W-12-15
S404	8W-12-27
S405	8W-12-27
S406	8W-54-5
S407	8W-54-5
S408	8W-15-13
S409	8W-15-13
S410	8W-15-13
S411	8W-12-12
S412	8W-15-14

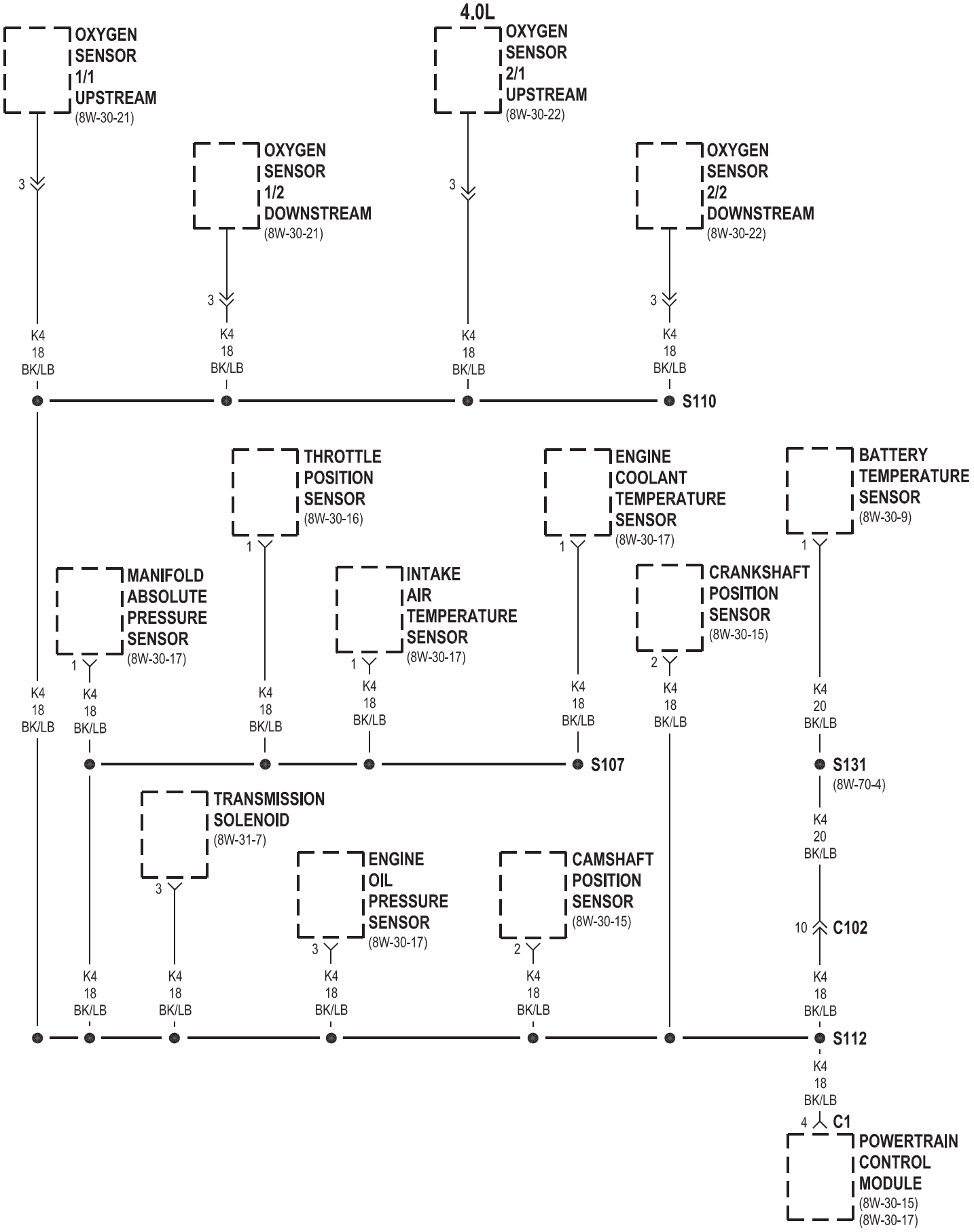
4.0L
OXYGEN SENSOR 1/1 UPSTREAM (8W-30-21)
OXYGEN SENSOR 2/1 UPSTREAM (8W-30-22)
OXYGEN SENSOR 1/2 DOWNSTREAM (8W-30-21)
OXYGEN SENSOR 2/2 DOWNSTREAM (8W-30-22)
3
K4 18 BK/LB
S110
THROTTLE POSITION SENSOR (8W-30-16)
ENGINE COOLANT TEMPERATURE SENSOR (8W-30-17)
BATTERY TEMPERATURE SENSOR (8W-30-9)
MANIFOLD ABSOLUTE PRESSURE SENSOR (8W-30-17)
INTAKE AIR TEMPERATURE SENSOR (8W-30-17)
CRANKSHAFT POSITION SENSOR (8W-30-15)
1
2
K4 20 BK/LB
S107
S131 (8W-70-4)
TRANSMISSION SOLENOID (8W-31-7)
ENGINE OIL PRESSURE SENSOR (8W-30-17)
CAMSHAFT POSITION SENSOR (8W-30-15)
10
C102
S112
4
C1
POWERTRAIN CONTROL MODULE (8W-30-15) (8W-30-17)

4.7L

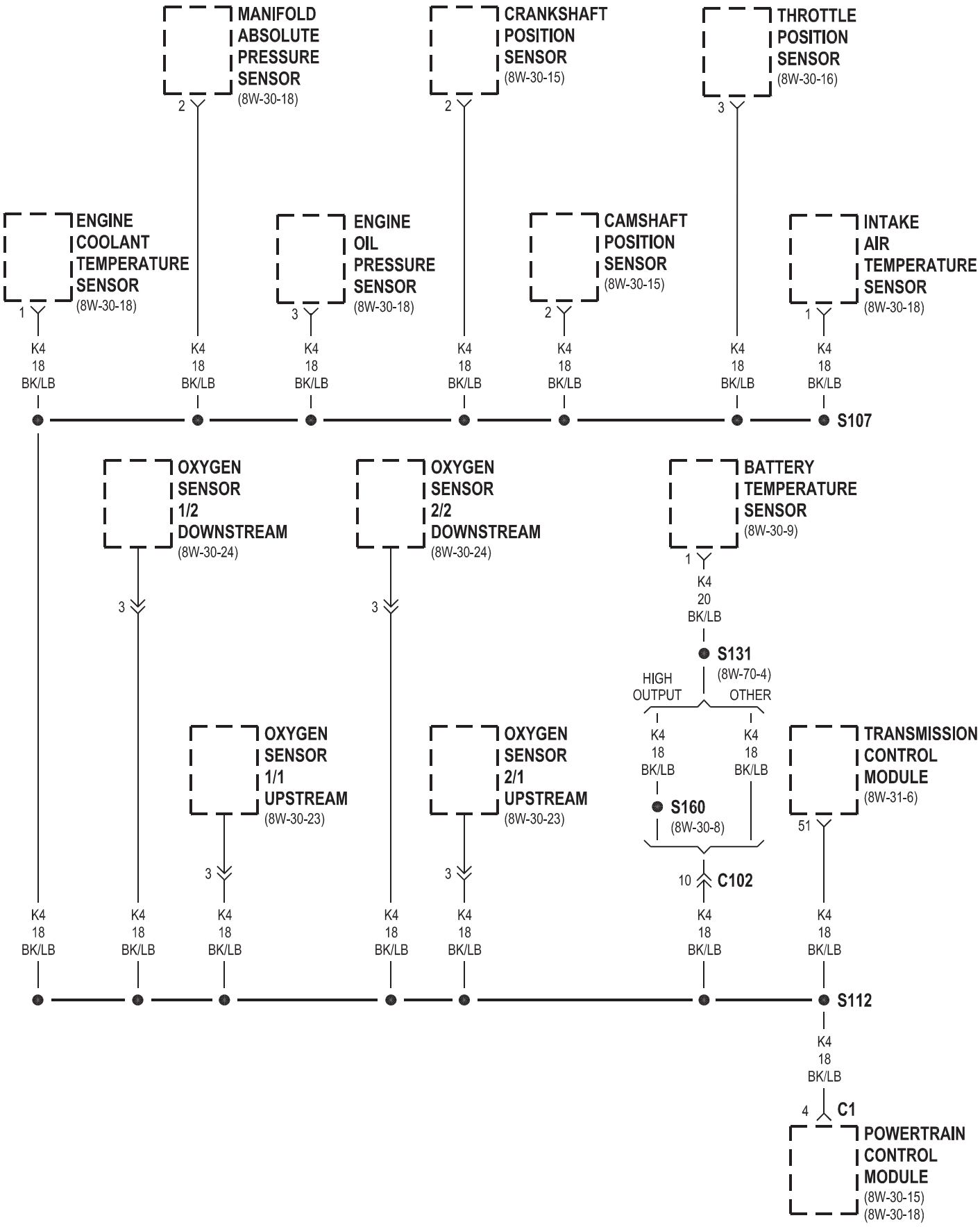
MANIFOLD ABSOLUTE PRESSURE SENSOR (8W-30-18)
CRANKSHAFT POSITION SENSOR (8W-30-15)
THROTTLE POSITION SENSOR (8W-30-16)
ENGINE COOLANT TEMPERATURE SENSOR (8W-30-18)
ENGINE OIL PRESSURE SENSOR (8W-30-18)
CAMSHAFT POSITION SENSOR (8W-30-15)
INTAKE AIR TEMPERATURE SENSOR (8W-30-18)
K4 18 BK/LB
S107
OXYGEN SENSOR 1/2 DOWNSTREAM (8W-30-24)
OXYGEN SENSOR 2/2 DOWNSTREAM (8W-30-24)
BATTERY TEMPERATURE SENSOR (8W-30-9)
K4 20 BK/LB
S131 (8W-70-4)
HIGH OUTPUT
OTHER
OXYGEN SENSOR 1/1 UPSTREAM (8W-30-23)
OXYGEN SENSOR 2/1 UPSTREAM (8W-30-23)
S160 (8W-30-8)
TRANSMISSION CONTROL MODULE (8W-31-6)
C102
S112
C1
POWERTRAIN CONTROL MODULE (8W-30-15) (8W-30-18)

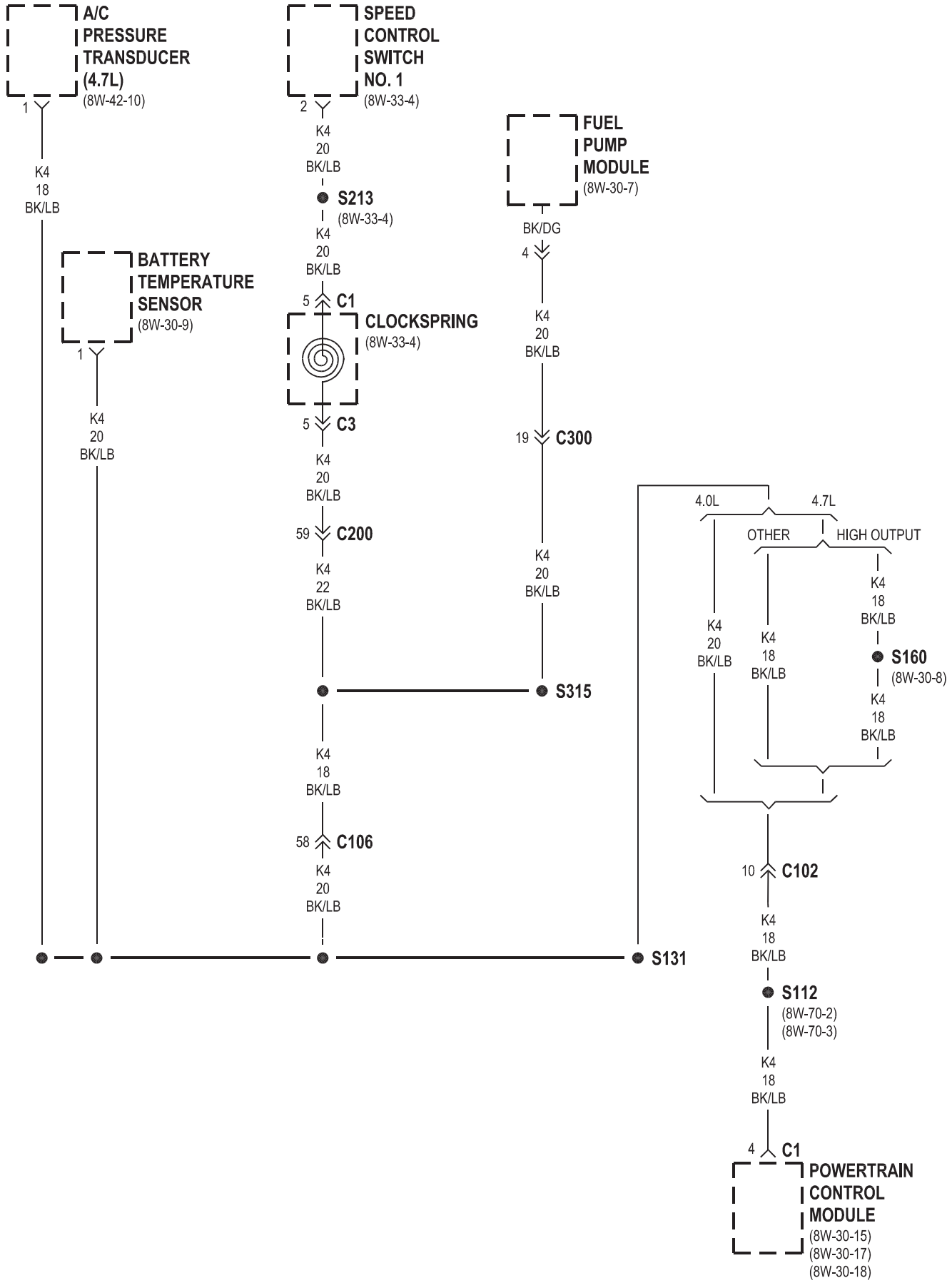
A/C PRESSURE TRANSDUCER (4.7L)
(8W-42-10)
1
K4 18 BK/LB
SPEED CONTROL SWITCH NO. 1
(8W-33-4)
2
K4 20 BK/LB
S213
(8W-33-4)
K4 20 BK/LB
5
C1
CLOCKSPRING
(8W-33-4)
5
C3
K4 20 BK/LB
59
C200
K4 22 BK/LB
K4 18 BK/LB
58
C106
K4 20 BK/LB
BATTERY TEMPERATURE SENSOR
(8W-30-9)
1
K4 20 BK/LB
FUEL PUMP MODULE
(8W-30-7)
BK/DG
4
K4 20 BK/LB
19
C300
K4 20 BK/LB
S315
S131
4.0L
4.7L
OTHER
HIGH OUTPUT
K4 20 BK/LB
K4 18 BK/LB
K4 18 BK/LB
S160
(8W-30-8)
K4 18 BK/LB
10
C102
K4 18 BK/LB
S112
(8W-70-2)
(8W-70-3)
K4 18 BK/LB
4
C1
POWERTRAIN CONTROL MODULE
(8W-30-15)
(8W-30-17)
(8W-30-18)

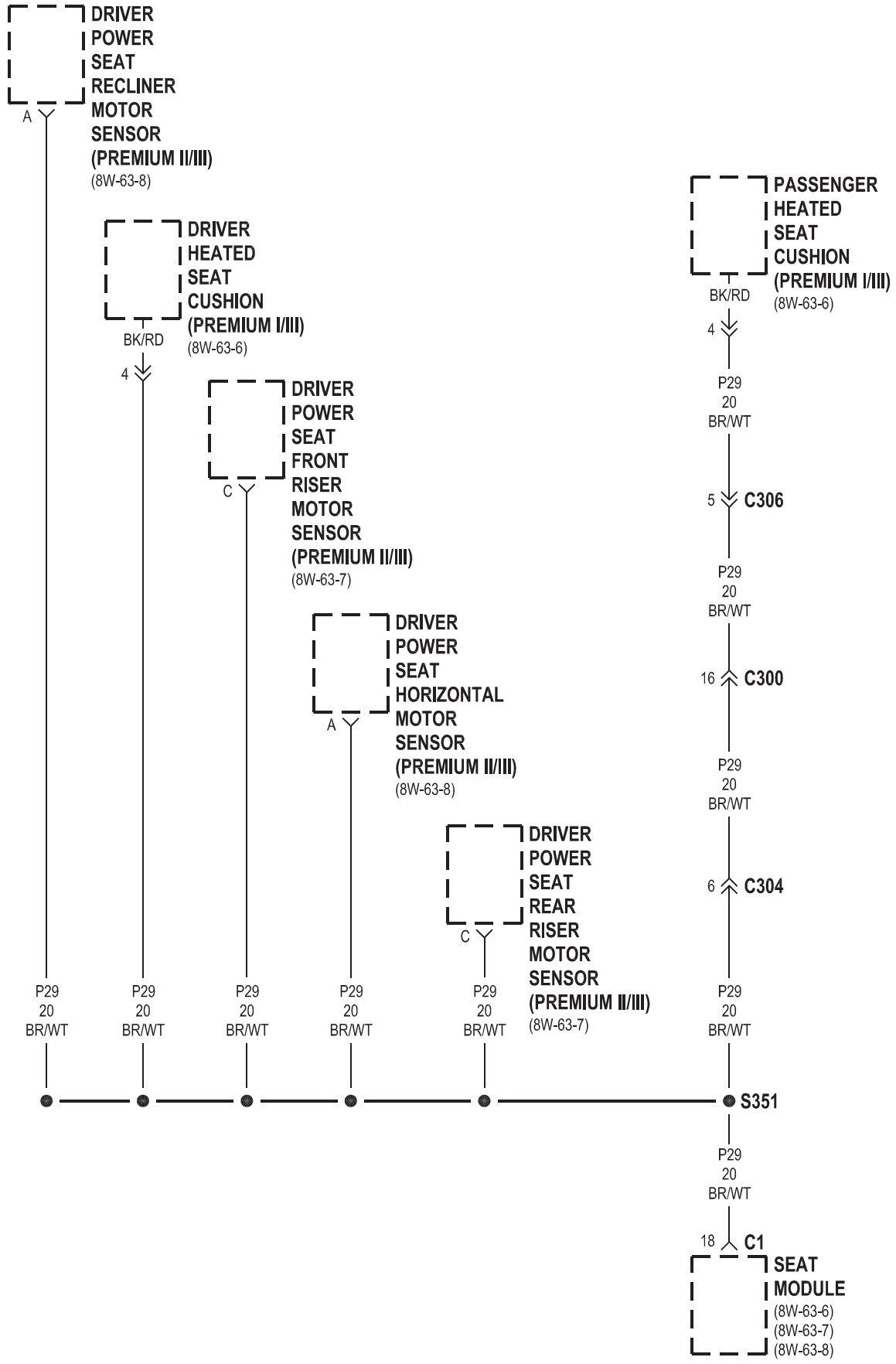
DRIVER POWER SEAT RECLINER MOTOR SENSOR (PREMIUM II/III)
(8W-63-8)
A
DRIVER HEATED SEAT CUSHION (PREMIUM I/III)
(8W-63-6)
BK/RD
4
DRIVER POWER SEAT FRONT RISER MOTOR SENSOR (PREMIUM II/III)
(8W-63-7)
C
DRIVER POWER SEAT HORIZONTAL MOTOR SENSOR (PREMIUM II/III)
(8W-63-8)
A
DRIVER POWER SEAT REAR RISER MOTOR SENSOR (PREMIUM II/III)
(8W-63-7)
C
PASSENGER HEATED SEAT CUSHION (PREMIUM I/III)
(8W-63-6)
BK/RD
4
P29
20
BR/WT
5
C306
P29
20
BR/WT
16
C300
P29
20
BR/WT
6
C304
P29
20
BR/WT
P29
20
BR/WT
P29
20
BR/WT
P29
20
BR/WT
P29
20
BR/WT
P29
20
BR/WT
S351
P29
20
BR/WT
18
C1
SEAT MODULE
(8W-63-6)
(8W-63-7)
(8W-63-8)

8W-80 CONNECTOR PIN-OUTS

Component	Page
A/C Compressor Clutch	8W-80-4
A/C High Pressure Switch	8W-80-4
A/C Low Pressure Switch	8W-80-4
A/C Pressure Transducer	8W-80-4
Airbag Control Module	8W-80-4
Ambient Temperature Sensor	8W-80-5
Ash Receiver Lamp	8W-80-5
Automatic Day/Night Mirror	8W-80-5
Automatic Headlamp Light Sensor/VTSS LED	8W-80-5
Automatic Zone Control Module C1 (AZC)	8W-80-6
Automatic Zone Control Module C2 (AZC)	8W-80-6
Battery Temperature Sensor	8W-80-6
Blower Motor	8W-80-7
Blower Motor Controller (AZC)	8W-80-7
Blower Motor Resistor Block (MTC)	8W-80-7
Body Control Module C1	8W-80-7
Body Control Module C2	8W-80-8
Brake Lamp Switch	8W-80-8
Brake Transmission Shift Interlock Solenoid	8W-80-9
C100	8W-80-9
C100	8W-80-9
C102	8W-80-9
C102	8W-80-10
C103	8W-80-10
C103	8W-80-11
C104 (4.7L)	8W-80-11
C104 (4.7L)	8W-80-11
C104 (High Output)	8W-80-12
C104 (High Output)	8W-80-12
C106	8W-80-12
C106	8W-80-14
C107	8W-80-15
C107	8W-80-17
C108	8W-80-18
C108	8W-80-18
C109	8W-80-18
C109	8W-80-19
C111	8W-80-19
C111	8W-80-19
C112	8W-80-19
C112	8W-80-20
C200	8W-80-20
C200	8W-80-21
C201	8W-80-23
C201	8W-80-23
C202 (AZC)	8W-80-23
C202 (AZC)	8W-80-24
C202 (MTC)	8W-80-24
C202 (MTC)	8W-80-24
C203 (AZC)	8W-80-25
C203 (AZC)	8W-80-25
C300	8W-80-25
C300	8W-80-27
C302	8W-80-28
C302	8W-80-29
C303	8W-80-29
C303	8W-80-29
C304	8W-80-30
C304	8W-80-30
C306	8W-80-30
C306	8W-80-30
C307	8W-80-31
C307	8W-80-31
C308	8W-80-31
C308	8W-80-32
C309	8W-80-32
C309	8W-80-32
C310	8W-80-33
C310	8W-80-33
C311	8W-80-33
C311	8W-80-34
C312	8W-80-34
C312	8W-80-34
C313	8W-80-34
C313	8W-80-34
C314	8W-80-35
C314	8W-80-35
C315	8W-80-35
C315	8W-80-36
Camshaft Position Sensor	8W-80-36
Capacitor (4.0L)	8W-80-36
Capacitor No. 1 (4.7L)	8W-80-36
Capacitor No. 2 (4.7L)	8W-80-36
Cargo Lamp	8W-80-36
Center High Mounted Stop Lamp	8W-80-37
Cigar Lighter	8W-80-37
Clockspring C1	8W-80-37
Clockspring C2	8W-80-37
Clockspring C3	8W-80-37
Coil On Plug No. 1 (4.7L)	8W-80-38
Coil On Plug No. 2 (4.7L)	8W-80-38
Coil On Plug No. 3 (4.7L)	8W-80-38
Coil On Plug No. 4 (4.7L)	8W-80-38
Coil On Plug No. 5 (4.7L)	8W-80-38
Coil On Plug No. 6 (4.7L)	8W-80-39
Coil On Plug No. 7 (4.7L)	8W-80-39
Coil On Plug No. 8 (4.7L)	8W-80-39
Coil Rail (4.0L)	8W-80-39
Compact Disc Changer (Premium Audio)	8W-80-39
Controller Antilock Brake	8W-80-40

Component	Page
Coolant Level Sensor	8W-80-40
Crankshaft Position Sensor	8W-80-40
Data Link Connector	8W-80-41
Diagnostic Junction Port	8W-80-41
Driver Airbag	8W-80-41
Driver Blend Door Motor/Actuator (AZC)	8W-80-41
Driver Cylinder Lock Switch	8W-80-42
Driver Door Power Lock Motor/Ajar Switch	8W-80-42
Driver Door Module C1	8W-80-42
Driver Door Module C2	8W-80-42
Driver Door Module C3	8W-80-43
Driver Front Door Courtesy Lamp	8W-80-43
Driver Front Power Window Motor	8W-80-43
Driver Heated Seat Back (Premium I/III)	8W-80-43
Driver Heated Seat Cushion (Premium I/III)	8W-80-43
Driver Heated Seat Switch	8W-80-44
Driver Lumbar Motor (Midline/Premium)	8W-80-44
Driver Lumbar Switch (Midline/Premium)	8W-80-44
Driver Power Mirror	8W-80-44
Driver Power Seat Front Riser Motor	8W-80-45
Driver Power Seat Front Riser Motor Sensor (Premium II/III)	8W-80-45
Driver Power Seat Horizontal Motor	8W-80-45
Driver Power Seat Horizontal Motor Sensor (Premium II/III)	8W-80-45
Driver Power Seat Rear Riser Motor	8W-80-45
Driver Power Seat Rear Riser Motor Sensor (Premium II/III)	8W-80-46
Driver Power Seat Recliner Motor	8W-80-46
Driver Power Seat Recliner Motor Sensor (Premium II/III)	8W-80-46
Driver Power Seat Switch (Midline/Premium)	8W-80-46
Driver Rear Power Window Motor	8W-80-47
Driver Rear Power Window Switch	8W-80-47
Electric Brake	8W-80-47
Electronic Speed Control Servo	8W-80-47
Engine Coolant Temperature Sensor	8W-80-47
Engine Oil Pressure Sensor	8W-80-48
Evap/Purge Solenoid	8W-80-48
Front Power Outlet	8W-80-48
Front Washer Pump	8W-80-48
Front Wiper Motor	8W-80-48
Fuel Injector No. 1	8W-80-49
Fuel Injector No. 2	8W-80-49
Fuel Injector No. 3	8W-80-49
Fuel Injector No. 4	8W-80-49
Fuel Injector No. 5	8W-80-49
Fuel Injector No. 6	8W-80-50
Fuel Injector No. 7 (4.7L)	8W-80-50
Fuel Injector No. 8 (4.7L)	8W-80-50
Fuel Pump Module	8W-80-50
Generator	8W-80-50
Glove Box Lamp	8W-80-51
G-Switch	8W-80-51
Horn No. 1	8W-80-51
Horn No. 2	8W-80-51
Hydraulic Cooling Module	8W-80-51
Idle Air Control Motor	8W-80-51
Ignition Switch C1	8W-80-52
Ignition Switch C2	8W-80-52
Input Speed Sensor (4.7L)	8W-80-52
Instrument Cluster	8W-80-52
Intake Air Temperature Sensor	8W-80-52
Junction Block C1	8W-80-53
Junction Block C2	8W-80-54
Junction Block C3	8W-80-55
Junction Block C4	8W-80-56
Junction Block C5	8W-80-56
Junction Block Body Control Module	8W-80-56
Knock Sensor	8W-80-57
Leak Detection Pump	8W-80-57
Left Courtesy Lamp	8W-80-57
Left Door Handle Courtesy Lamp	8W-80-57
Left Fog Lamp	8W-80-57
Left Front Door Speaker	8W-80-57
Left Front Park Lamp	8W-80-58
Left Front Park/Turn Signal Lamp	8W-80-58
Left Front Side Marker Lamp	8W-80-58
Left Front Wheel Speed Sensor	8W-80-58
Left High Beam Headlamp	8W-80-58
Left Instrument Panel Speaker	8W-80-58
Left Liftgate Ajar Switch	8W-80-59
Left Low Beam Headlamp	8W-80-59
Left Multi-Function Switch	8W-80-59
Left Rear Door Power Lock Motor/Ajar Switch	8W-80-59
Left Rear Door Speaker	8W-80-59
Left Rear Lamp Assembly	8W-80-60
Left Rear Wheel Speed Sensor	8W-80-60
Left Remote Radio Switch	8W-80-60
Left Visor/Vanity Lamp	8W-80-60
License Lamp No. 1	8W-80-60
License Lamp No. 2	8W-80-60
Liftgate Flip-Up Ajar Switch	8W-80-61
Liftgate Flip-Up Push Button Switch	8W-80-61
Liftgate Flip-Up Release Solenoid	8W-80-61
Liftgate Power Lock Motor	8W-80-61
Line Pressure Sensor (4.7L)	8W-80-61
Manifold Absolute Pressure Sensor (4.0L)	8W-80-62
Manifold Absolute Pressure Sensor (4.7L)	8W-80-62
Manual Temperature Control C1 (MTC)	8W-80-62
Manual Temperature Control C2 (MTC)	8W-80-62

Component	Page
Mode Door Motor/Actuator (AZC)	8W-80-62
Output Speed Sensor (4.0L)	8W-80-63
Output Speed Sensor (4.7L)	8W-80-63
Overhead Map/Courtesy Lamp	8W-80-63
Oxygen Sensor 1/1 Upstream	8W-80-63
Oxygen Sensor 1/2 Downstream	8W-80-63
Oxygen Sensor 2/1 Upstream	8W-80-64
Oxygen Sensor 2/2 Downstream	8W-80-64
Park/Neutral Position Switch (4.0L)	8W-80-64
Passenger Airbag	8W-80-64
Passenger Blend Door Motor/Actuator (AZC)	8W-80-64
Passenger Door Power Lock Motor/Ajar Switch	8W-80-65
Passenger Door Module C1	8W-80-65
Passenger Door Module C2	8W-80-65
Passenger Front Door Courtesy Lamp	8W-80-65
Passenger Front Power Window Motor	8W-80-66
Passenger Heated Seat Back (Premium I/III)	8W-80-66
Passenger Heated Seat Cushion (Premium I/III)	8W-80-66
Passenger Heated Seat Switch	8W-80-66
Passenger Lumbar Motor (Midline/Premium)	8W-80-66
Passenger Lumbar Switch (Midline/Premium)	8W-80-67
Passenger Power Mirror	8W-80-67
Passenger Power Seat Front Riser Motor	8W-80-67
Passenger Power Seat Horizontal Motor	8W-80-67
Passenger Power Seat Rear Riser Motor	8W-80-67
Passenger Power Seat Recliner Motor (Midline/Premium)	8W-80-68
Passenger Power Seat Switch (Midline/Premium)	8W-80-68
Passenger Rear Power Window Motor	8W-80-68
Passenger Rear Power Window Switch	8W-80-68
Power Amplifier C1 (Premium Audio)	8W-80-68
Power Amplifier C2 (Premium Audio)	8W-80-69
Power Connector	8W-80-69
Powertrain Control Module C1	8W-80-69
Powertrain Control Module C2	8W-80-70
Powertrain Control Module C3	8W-80-71
Radiator Fan Motor	8W-80-71
Radiator Fan Relay	8W-80-72
Radio C1	8W-80-72
Radio C2	8W-80-72
Radio C3	8W-80-72
Radio C4 (Premium)	8W-80-72
Rear Power Outlet (Except Base)	8W-80-73
Rear Washer Pump	8W-80-73
Rear Wiper Motor	8W-80-73
Recirculation Door Motor/Actuator (AZC)	8W-80-73
Red Brake Warning Indicator Switch	8W-80-73
Right Courtesy Lamp	8W-80-73
Right Door Handle Courtesy Lamp	8W-80-74
Right Fog Lamp	8W-80-74
Right Front Door Speaker	8W-80-74
Right Front Park Lamp	8W-80-74
Right Front Park/Turn Signal Lamp	8W-80-74
Right Front Side Marker Lamp	8W-80-75
Right Front Wheel Speed Sensor	8W-80-75
Right High Beam Headlamp	8W-80-75
Right Instrument Panel Speaker	8W-80-75
Right Liftgate Ajar Switch	8W-80-75
Right Low Beam Headlamp	8W-80-76
Right Multi-Function Switch	8W-80-76
Right Rear Door Power Lock Motor/Ajar Switch	8W-80-76
Right Rear Door Speaker	8W-80-76
Right Rear Lamp Assembly	8W-80-76
Right Rear Wheel Speed Sensor	8W-80-77
Right Remote Radio Switch	8W-80-77
Right Visor/Vanity Lamp	8W-80-77
Seat Belt Switch	8W-80-77
Seat Module C1 (Premium)	8W-80-77
Seat Module C2 (Premium)	8W-80-78
Sentry Key Immobilizer Module	8W-80-78
Speed Control Switch No. 1	8W-80-78
Speed Control Switch No. 2	8W-80-78
Sunroof Control Module	8W-80-79
Sunroof Motor C1	8W-80-79
Sunroof Motor C2	8W-80-79
Sunroof Switch	8W-80-79
Temperature Valve Actuator (MTC)	8W-80-79
Throttle Position Sensor (4.0L)	8W-80-80
Throttle Position Sensor (4.7L)	8W-80-80
Trailer Tow Brake Lamp Relay	8W-80-80
Trailer Tow Circuit Breaker	8W-80-80
Trailer Tow Connector	8W-80-80
Trailer Tow Left Turn Relay	8W-80-81
Trailer Tow Right Turn Relay	8W-80-81
Transfer Case Switch (4.0L)	8W-80-81
Transmission Control Module (4.7L)	8W-80-81
Transmission Solenoid (4.0L)	8W-80-82
Transmission Solenoid/TRS Assembly (4.7L)	8W-80-83
Underhood Lamp	8W-80-83
Vehicle Information Center	8W-80-83
Washer Fluid Level Switch	8W-80-83

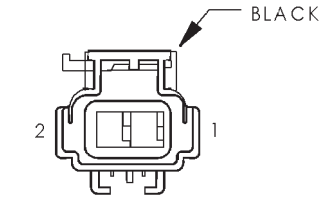

A/C COMPRESSOR CLUTCH

A/C COMPRESSOR CLUTCH - BLACK 2 WAY

CAV	CIRCUIT	FUNCTION
1	C2 18DB/YL	A/C COMPRESSOR CLUTCH RELAY OUTPUT
2	Z1 18BK	GROUND

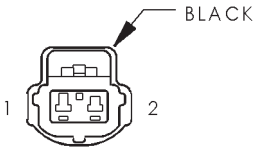

A/C HIGH PRESSURE SWITCH

A/C HIGH PRESSURE SWITCH - BLACK 2 WAY

CAV	CIRCUIT	FUNCTION
1	C18 18DB (4.0L)	A/C PRESSURE SIGNAL
2	C21 20DB/YL	A/C SWITCH SENSE

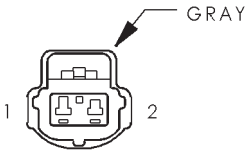

A/C LOW PRESSURE SWITCH

A/C LOW PRESSURE SWITCH - GRAY 2 WAY

CAV	CIRCUIT	FUNCTION
1	C21 20DB/YL (4.0L)	A/C SWITCH SENSE
1	C21 18DB/YL (4.7L)	A/C SWITCH SENSE
2	Z1 20BK	GROUND

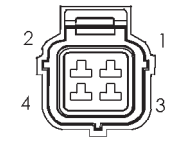

A/C PRESSURE TRANSDUCER

A/C PRESSURE TRANSDUCER - BLACK 4 WAY

CAV	CIRCUIT	FUNCTION
1	K4 18BK/LB	SENSOR GROUND
2	K6 18VT/WT	5V SUPPLY
3	C18 18DB	A/C PRESSURE SIGNAL
4	-	-

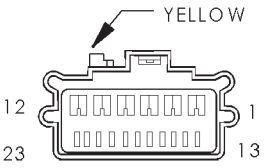

AIRBAG CONTROL MODULE

AIRBAG CONTROL MODULE - YELLOW 23 WAY

CAV	CIRCUIT	FUNCTION
1	-	-
2	-	-
3	-	-
4	Z2 18BK/OR	GROUND
5	R45 18DG/LB	DRIVER AIRBAG LINE 2
6	R43 18BK/LB	DRIVER AIRBAG LINE 1
7	R42 18BK/YL	PASSENGER AIRBAG LINE 1
8	R44 18DG/YL	PASSENGER AIRBAG LINE 2
9	-	-
10	-	-
11	-	-

AIRBAG CONTROL MODULE - YELLOW 23 WAY

CAV	CIRCUIT	FUNCTION
12	-	-
13	-	-
14	F14 18LG/YL	FUSED IGNITION SWITCH OUTPUT (RUN-START)
15	F23 18DB/YL	FUSED IGNITION SWITCH OUTPUT (RUN)
16	-	-
17	-	-
18	-	-
19	-	-
20	-	-
21	D25 18YL/VT/OR	PCI BUS
22	-	-
23	-	-

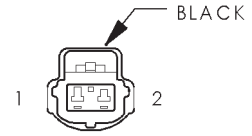

AMBIENT TEMPERATURE SENSOR

AMBIENT TEMPERATURE SENSOR - BLACK 2 WAY

CAV	CIRCUIT	FUNCTION
1	G39 20DB/OR	AMBIENT TEMPERATURE SENSOR RETURN
2	C8 20DG/RD	AMBIENT TEMPERATURE SENSOR SIGNAL

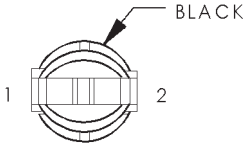

ASH RECEIVER LAMP

ASH RECEIVER LAMP - BLACK 2 WAY

CAV	CIRCUIT	FUNCTION
1	Z1 20BK	GROUND
2	E2 20OR	PANEL LAMPS DRIVER

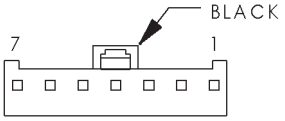

AUTOMATIC DAY/ NIGHT MIRROR

AUTOMATIC DAY/NIGHT MIRROR - BLACK 7 WAY

CAV	CIRCUIT	FUNCTION
1	G5 20DB/WT	FUSED IGNITION SWITCH OUTPUT (RUN-START)
2	Z1 20BK	GROUND
3	L1 20BK/VT	BACK-UP LAMP FEED
4	P112 20BK/WT	AUTO DAY NIGHT MIRROR (+)
5	P114 20BK/YL	AUTO DAY NIGHT MIRROR (-)
6	-	-
7	-	-

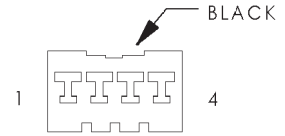

AUTOMATIC HEADLAMP LIGHT SENSOR/VTSS LED

AUTOMATIC HEADLAMP LIGHT SENSOR/VTSS LED - BLACK 4 WAY

CAV	CIRCUIT	FUNCTION
1	L109 20WT	ULTRALIGHT SENSOR SIGNAL
2	L110 20BK/YL	ULTRALIGHT SENSOR RETURN
3	G89 20BK/OR	VTSS INDICATOR DRIVER
4	M1 20PK	FUSED B(+)

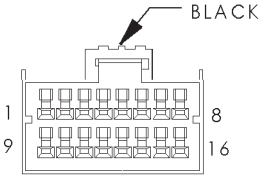

AUTOMATIC ZONE CONTROL MODULE - C1 (AZC)

AUTOMATIC ZONE CONTROL MODULE C1 (AZC) - BLACK 16 WAY

CAV	CIRCUIT	FUNCTION
1	C102 20TN/BK	MODE DOOR DRIVER (B)
2	-	-
3	C32 20GY/DB	RECIRCULATION DOOR DRIVER (A)
4	C100 20YL/DB	RECIRCULATION DOOR DRIVER (B)
5	-	-
6	C15 20BK/WT	FUSED REAR WINDOW DEFOGGER RELAY OUTPUT
7	-	-
8	Z1 20BK	GROUND
9	C35 20DG/YL	MODE DOOR DRIVER (A)
10	C33 20DB/RD	DRIVER BLEND DOOR DRIVER (A)
11	-	-
12	-	-
13	-	-
14	C15 20BK/WT	REAR WINDOW DEFOGGER SWITCH SENSE
15	-	-
16	-	-

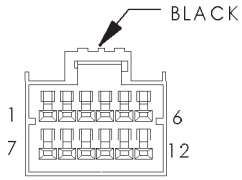

AUTOMATIC ZONE CONTROL MODULE - C2 (AZC)

AUTOMATIC ZONE CONTROL MODULE C2 (AZC) - BLACK 12 WAY

CAV	CIRCUIT	FUNCTION
1	-	-
2	C94 20WT/DG	PASSENGER BLEND DOOR DRIVER (A)
3	C95 20WT/BK	DRIVER BLEND DOOR DRIVER (B)
4	C96 20WT/DB	PASSENGER BLEND DOOR DRIVER (B)
5	-	-
6	E2 20OR	PANEL LAMPS DRIVER
7	C56 20RD/LG	BLOWER MOTOR CONTROL
8	D25 20YL/VT/DG	PCI BUS
9	C103 20DG	A/C SWITCH SIGNAL
10	-	-
11	F22 20WT/PK	FUSED IGNITION SWITCH OUTPUT (RUN)
12	M1 20PK	FUSED B(+)

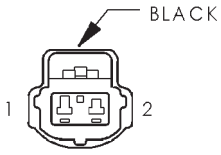

BATTERY TEMPERATURE SENSOR

BATTERY TEMPERATURE SENSOR - BLACK 2 WAY

CAV	CIRCUIT	FUNCTION
1	K4 20BK/LB	SENSOR GROUND
2	K25 18VT/LG	BATTERY TEMPERATURE SENSOR SIGNAL

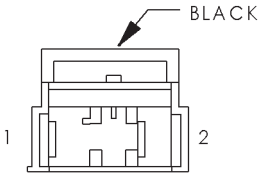

BLOWER MOTOR

BLOWER MOTOR - BLACK 2 WAY

CAV	CIRCUIT	FUNCTION
1	C1 12RD	BLOWER MOTOR SUPPLY
2	C7 12BK	BLOWER MOTOR HIGH DRIVER

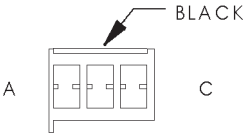

BLOWER MOTOR CONTROLLER (AZC)

BLOWER MOTOR CONTROLLER (AZC) - BLACK 3 WAY

CAV	CIRCUIT	FUNCTION
A	Z1 12BK	GROUND
B	C56 20BR/LG	BLOWER MOTOR CONTROL
C	C1 12RD	BLOWER MOTOR SUPPLY

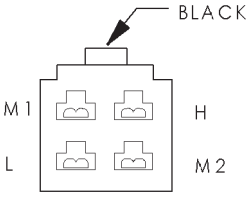

BLOWER MOTOR RESISTOR BLOCK (MTC)

BLOWER MOTOR RESISTOR BLOCK (MTC) - BLACK 4 WAY

CAV	CIRCUIT	FUNCTION
H	C7 12BK/TN	BLOWER MOTOR HIGH DRIVER
L	C4 16TN	BLOWER MOTOR LOW DRIVER
M2	C6 14LB	BLOWER MOTOR M2 DRIVER
M1	C5 16LG	BLOWER MOTOR M1 DRIVER

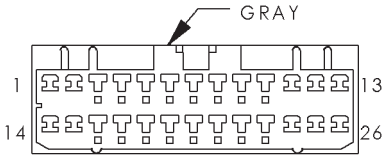

BODY CONTROL MODULE - C1

BODY CONTROL MODULE C1 - GRAY 26 WAY

CAV	CIRCUIT	FUNCTION
1	Z2 20BK/OR	GROUND
2	G52 20YL	HEADLAMP SWITCH MUX
3	E19 20RD	PANEL LAMPS DIMMER SIGNAL
4	-	-
5	-	-
6	G26 20LB	KEY-IN IGNITION SWITCH SENSE
7	G76 18TN/YL	RIGHT REAR DOOR AJAR SWITCH SENSE
8	E2 20OR	PANEL LAMPS DRIVER
9	E2 20OR	PANEL LAMPS DRIVER
10	E2 20OR	PANEL LAMPS DRIVER
11	-	-
12	E2 20OR	PANEL LAMPS DRIVER
13	E2 20OR	PANEL LAMPS DRIVER
14	Z2 20BK/OR	GROUND
15	D25 20YL/VT/WT	PCI BUS
16	L80 20WT/DG	HEADLAMP SWITCH RETURN
17	D19 20VT/OR	BODY CONTROL MODULE FLASH ENABLE
18	-	-
19	-	-

BODY CONTROL MODULE C1 - GRAY 26 WAY

CAV	CIRCUIT	FUNCTION
20	G69 20BK/OR	VTSS INDICATOR DRIVER
21	L7 18BK/YL	PARK LAMP RELAY OUTPUT
22	V14 22RD/VT	WIPER ON/OFF RELAY CONTROL
23	M20 20BR/OR	COURTESY LAMP LOAD SHED
24	M2 20YL	COURTESY LAMP DRIVER
25	Z1 20BK	GROUND
26	-	-

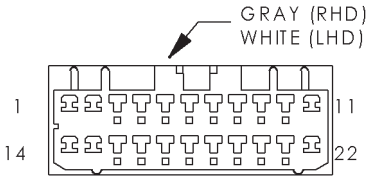

BODY CONTROL MODULE - C2

BODY CONTROL MODULE C2 - WHITE 22 WAY

CAV	CIRCUIT	FUNCTION
1	C103 20DG	A/C SWITCH SIGNAL
2	V10 20BR	WASHER PUMP SWITCH SENSE
3	-	-
4	L40 22BR	HIGH BEAM SWITCH SENSE
5	V11 20BK/TN	WASHER FLUID SWITCH SENSE
6	P134 20LG/WT	PASSENGER SEAT HEATER SWITCH MUX
7	P133 20LG/RD	DRIVER SEAT HEATER SWITCH MUX
8	X20 20RD/YL	RADIO CONTROL MUX
9	C8 20DG/RD	AMBIENT TEMPERATURE SENSOR SIGNAL
10	L109 20WT	ULTRALIGHT SENSOR SIGNAL
11	V52 22DG/RD	WINDSHIELD WIPER SWITCH MUX
12	C15 20BK/WT	REAR WINDOW DEFOGGER SWITCH SENSE
13	-	-
14	-	-
15	L27 22WT/TN	FOG LAMP SWITCH SENSE
16	-	-
17	G18 20PK/BK	COOLANT LEVEL SWITCH SENSE
18	P132 20OR/BK	SEAT HEATER SWITCH SENSOR GROUND
19	X10 20RD/BK	RADIO CONTROL MUX RETURN
20	G39 20DB/OR	AMBIENT TEMPERATURE SENSOR RETURN
21	L110 20BK/YL	ULTRALIGHT SENSOR RETURN
22	V59 22DB/YL	WINDSHIELD WIPER SWITCH RETURN

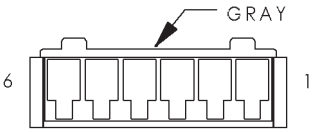

BRAKE LAMP SWITCH

BRAKE LAMP SWITCH - GRAY 6 WAY

CAV	CIRCUIT	FUNCTION
1	K29 18WT/PK	BRAKE SWITCH SENSE
2	Z1 18BK	GROUND
3	V32 22OR/DG	SPEED CONTROL POWER SUPPLY
4	V30 22DB/RD	SPEED CONTROL BRAKE SWITCH OUTPUT
5	L50 20WT/TN	BRAKE LAMP SWITCH OUTPUT
6	F32 20PK/DB	FUSED B(+)

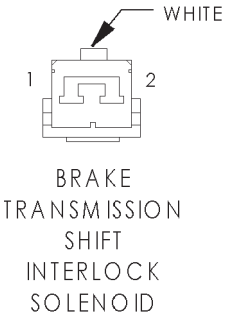

BRAKE TRANSMISSION SHIFT INTERLOCK SOLENOID - WHITE 2 WAY

CAV	CIRCUIT	FUNCTION
1	K29 18WT/PK	BRAKE SWITCH SENSE
2	F99 20OR	FUSED IGNITION SWITCH OUTPUT (RUN-START)

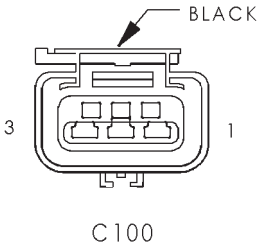

C100 - BLACK (RIGHT HEADLAMP AND DASH SIDE)

CAV	CIRCUIT
1	T40 12LG
2	K21 18LB/RD
3	K20 18DG

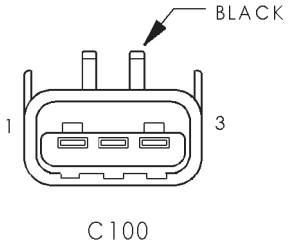

C100 - BLACK (BATTERY SIDE)

CAV	CIRCUIT
1	T40 12LG
2	K21 18LB/RD
3	K20 18DG

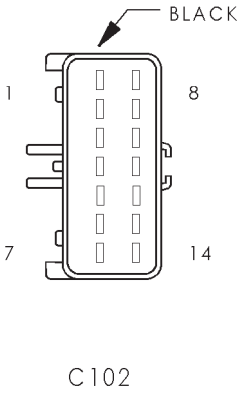

C102 - BLACK (RIGHT HEADLAMP AND DASH SIDE)

CAV	CIRCUIT
1	A30 14RD/WT (4.7L)
2	F991 20OR/DB
3	C24 20DB/PK (4.0L)
3	C240 18DB/RD (4.7L)
4	F42 18DG/LG
5	A7 14RD/BK
6	L1 18VT/BK
7	Z21 20BK/LG
8	T41 20BR/YL
9	C18 18DB (4.7L)
10	K4 20BK/LB (4.0L)
10	K4 18BK/LB (4.7L)
11	K99 18GY/WT (4.7L)
12	C2 18DB/YL
13	T107 20BK/RD
14	A142 14DG/OR

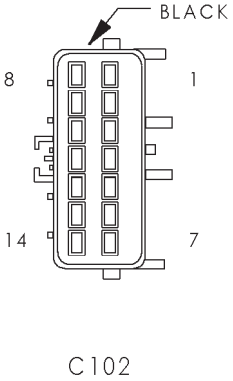

C102 - BLACK (ENGINE SIDE)

CAV	CIRCUIT
1	A30 14RD/WT (4.7L)
2	F991 18OR/DB
3	C24 18DB/PK (4.0L)
3	C240 18DB/RD (4.7L)
4	F42 18DG/LG
5	A7 14RD/BK
6	L1 18VT/BK
7	Z21 20BK/LG
8	T41 18BR/YL
9	C18 18DB (4.7L)
10	K4 18BK/LB
11	K99 18GY/WT (4.7L)
12	C2 18DB/YL
13	T107 18BK/RD
14	A142 14DG/OR (4.7L)
14	A142 16DG/OR (4.0L)

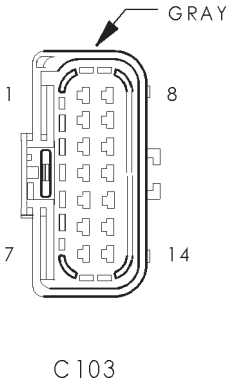

C103 - GRAY (RIGHT HEADLAMP AND DASH SIDE)

CAV	CIRCUIT
1	F22 20WT/TN
2	T9 18OR/BK (4.7L)
2	K200 18 VT/OR (4.0L)
3	D20 20LG
3	K99 18GY/WT (4.0L)
4	D21 20PK (4.7L)
4	K199 18DB/WT (4.0L)
5	G7 20WT/OR
6	K20 18DG
7	K30 20PK/YL
8	T99 19OR/YL (4.7L)
9	T16 14RD (4.7L)
10	D25 20YL/VT
11	Z2 20BK/OR
12	F45 20YL/RD (4.7L)
13	K199 18DB/WT (4.7L)
13	T60 18BR (4.0L)
14	F142 18OR/DG

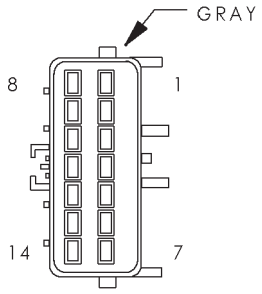

C103

C103- GRAY (ENGINE SIDE)

CAV	CIRCUIT
1	F22 18WT/TN
2	T6 18VT/WT (4.7L)
2	K200 18VT/OR (4.0L)
3	K99 18GY/WT (4.0L)
3	D20 20LG (4.7L)
4	K199 18DB/WT (4.0L)
4	D21 20PK (4.7L)
5	G7 18WT/OR
6	K20 18DG
7	K30 18PK/YL
8	T10 18YL/DG (4.7L)
9	T16 14RD (4.7L)
10	D25 18YL/VT (4.7L)
11	Z2 20BK/OR
12	F45 18YL/RD (4.7L)
13	K199 18DB/WT (4.7L)
13	T60 18BR (4.0L)
14	F142 18OR/DG

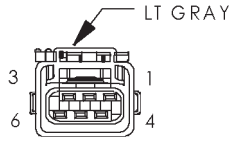

C104
(4.7 L)

C104 (4.7L) - LT GRAY (RIGHT HEADLAMP AND DASH SIDE)

CAV	CIRCUIT
1	K200 18VT/OR
2	K6 18VT/WT
3	-
4	-
5	-
6	-

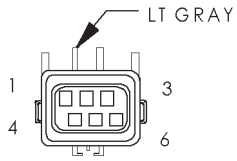

C104
(4.7 L)

C104 (4.7L) - LT GRAY (ENGINE SIDE)

CAV	CIRCUIT
1	K200 18VT/OR
2	K6 18VT/WT
3	-
4	-
5	-
6	-

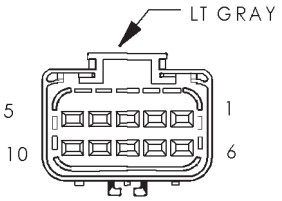

C104
(HIGH OUTPUT)

C104 (HIGH OUTPUT) - LT. GRAY (RIGHT HEADLAMP AND DASH SIDE)

CAV	CIRCUIT
1	K42 18DB/LG
2	K403 18BK/DB
3	-
4	K200 18VT/OR
5	-
6	-
7	K6 18VT/WT
8	-
9	K142 18GY/BK
10	K402 18BK/DG

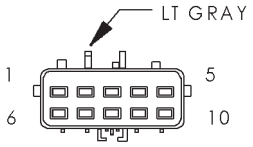

C104
(HIGH OUTPUT)

C104 (HIGH OUTPUT) - LT. GRAY (ENGINE SIDE)

CAV	CIRCUIT
1	K42 18DB/LG
2	K403 18BK/DB
3	-
4	K200 18VT/OR
5	-
6	-
7	K6 18VT/BK
8	-
9	K142 18GY/BK
10	K402 18BK/DG

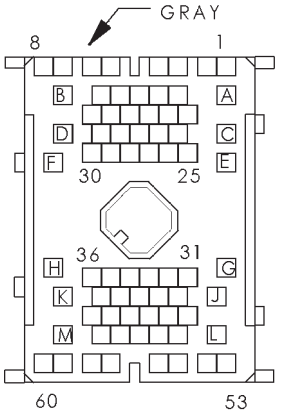

C106

C106 - GRAY (BODY SIDE)

CAV	CIRCUIT
1	A141 16DG/BK
2	G18 20PK/BK
3	V3 16BR/WT
4	V4 16RD/YL
5	V55 16TN/RD
6	V6 16DB
7	F22 20WT/PK
8	F99 20OR
9	K52 20PK/BK
10	K29 20WT/PK
11	K226 20LB/YL
12	K107 20OR/PK
13	K106 20WT/DG
14	-
15	-
16	-
17	-

C106 - GRAY (BODY SIDE)

CAV	CIRCUIT
18	-
19	-
20	K21 18LB/RD
21	-
22	-
23	-
24	-
25	B7 18WT
26	B6 18WT/DB
27	X4 22GY/OR
28	G39 20DB/OR
29	-
30	C8 20DG/RD
31	-
32	V32 22OR/DG
33	V30 22DB/RD
34	V16 22VT
35	V14 22RD/VT
36	G7 18WT/OR
37	F45 20YL/RD
38	-
39	T107 20BK/RD
40	Z21 20BK/LG
41	Z2 20BK/OR
42	-
43	-
44	F991 20OR/DB
45	-
46	-
47	-
48	D25 18YL/VT
49	D21 20PK
50	D20 20LG
51	D32 20LG/DG
52	T9 18OR/BK
53	L7 20BK/YL
54	L60 20TN
55	V37 22RD/LG
56	L1 18VT/BK
57	L39 20LB
58	K4 18BK/LB
59	L44 18VT/RD
60	L34 18RD/OR
A	-
B	-
C	C1 12DG
D	A149 12RD/TN
E	A10 12RD/DG
F	A1 12RD
G	A145 10WT/RD
H	A146 10OR/WT
J	A147 10RD/GY
K	A148 10PK/WT
L	A2 12PK/BK
M	A20 14RD/DB

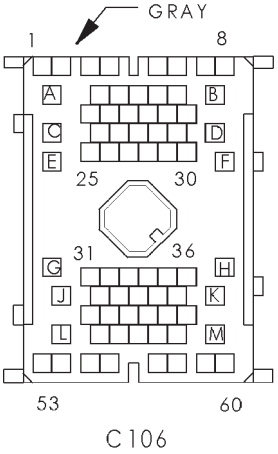

C106 - BLACK (RIGHT HEADLAMP AND DASH SIDE)

CAV	CIRCUIT
1	A141 16DG/BK
2	G18 20PK/BK
3	V3 16BR/WT
4	V4 16RD/YL
5	V55 16TN/RD
6	V6 16DB
7	F22 20WT/TN
8	F99 20OR
9	K52 18PK/BK
10	K29 18WT/PK
11	K226 18LB/YL
12	K107 18OR/PK
13	K106 18WT/DG
14	-
15	-
16	-
17	-
18	-
19	-
20	-
21	-
22	-
23	-
24	-
25	B7 18WT
26	B6 18WT/DB
27	X4 20GY/OR
28	G39 20DB/OR
29	-
30	C8 20DG/RD
31	-
32	V32 18OR/DG
33	V30 20DB/RD
34	V16 20VT
35	V14 20RD/VT
36	G7 20WT/OR
37	F45 20YL/RD
38	-
39	T107 20BK/RD
40	Z21 20BK/LG
41	Z2 20BK/OR
42	-
43	-
44	F991 20OR/DB
45	-
46	-
47	-
48	D25 20YL/VT
49	D21 18PK (4.0L)
49	D21 20PK (4.7L)
50	D20 20LG (4.7L)
51	D32 18LG/DG
52	T9 18OR/BK (4.7L)

C106 - BLACK (RIGHT HEADLAMP AND DASH SIDE)

CAV	CIRCUIT
52	T99 18OR/YL (4.0L)
53	L7 20BK/YL
54	L60 20TN
55	V37 18RD/LG
56	L1 18VT/BK
57	L39 20LB
58	K4 20BK/LB
59	L44 18VT/RD
60	L34 18RD/OR
A	-
B	-
C	C1 12DG
D	A149 12RD/TN
E	A10 12RD/DG
F	A1 12RD
G	A145 10WT/RD
H	A146 10OR/WT
J	A147 10RD/GY
K	A148 10PK/WT
L	A2 12PK/BK
M	A20 12RD/DB

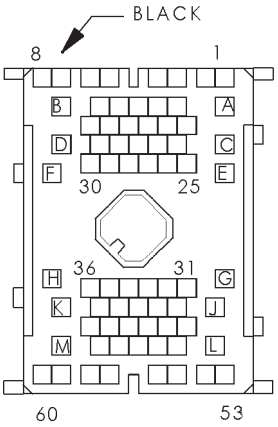

C107

C107 - BLACK (BODY SIDE)

CAV	CIRCUIT
1	-
2	V11 20BK/TN
3	V3 16BR/WT
4	V4 16RD/YL
5	V55 16TN/RD
6	V6 16DB
7	V10 22BR
8	F99 20OR
9	K52 20PK/BK
10	-
11	-
12	K107 20OR/PK
13	K106 20WT/DG
14	-
15	-
16	-
17	-
18	-
19	-
20	K21 18LB/RD
21	-
22	-
23	-
24	-
25	B7 18WT
26	B6 18WT/DB

C107 - BLACK (BODY SIDE)

CAV	CIRCUIT
27	B4 18LG
28	B3 18LG/DB
29	B2 18YL
30	B1 18YL/DB
31	-
32	M1 20PK/RD
33	F20 18DB/PK
34	L50 18WT/TN
35	-
36	G7 18WT/OR
37	-
38	-
39	-
40	-
41	-
42	-
43	-
44	-
45	-
46	-
47	-
48	D25 18YL/VT
49	-
50	B41 18YL/PK
51	B42 18TN/WT
52	B43 18PK/OR
53	L7 20BK/YL
54	L61 20TN/LG
55	D20 20LG
56	V20 18BK/WT
57	L39 20LB
58	-
59	L43 18VT
60	L33 18RD
A	-
B	-
C	-
D	-
E	A10 12RD/DG
F	-
G	-
H	-
J	-
K	-
L	-
M	A20 14RD/DB

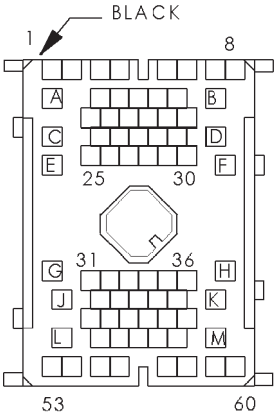

C107

C107 - BLACK (LEFT HEADLAMP AND DASH SIDE)

CAV	CIRCUIT
1	-
2	V11 20BK/TN
3	V3 16BR/WT
4	V4 16RD/YL
5	V55 16TN/RD
6	V6 16DB
7	V10 20BR
8	F99 20OR
9	K226 18LB/YL
9	K52 20PK/BK
10	-
11	-
12	K107 20OR/PK
13	K106 20WT/DG
14	-
15	-
16	-
17	-
18	-
19	-
20	F142 18OR/DG
21	-
22	-
23	-
24	-
25	B7 18WT
26	B6 18WT/DB
27	B4 18LG
28	B3 18LG/DB
29	B2 18YL
30	B1 18YL/DB
31	-
32	M1 20PK/RD
33	F20 18DB/PK
34	L50 18WT/TN
35	-
36	G7 18WT/OR
37	-
38	-
39	-
40	-
41	-
42	-
43	-
44	-
45	-
46	-
47	-
48	D25 18YL/VT
49	-
50	B41 18YL/PK
51	B42 18TN/WT
52	B43 18PK/OR

C107 - BLACK (LEFT HEADLAMP AND DASH SIDE)

CAV	CIRCUIT
53	L7 20BK/YL
54	L61 20TN/LG
55	-
56	V20 18BK/WT
57	L39 20LB
58	-
59	L43 18VT
60	L33 18RD
A	-
B	-
C	-
D	-
E	A10 12RD/DG
F	-
G	-
H	-
J	-
K	-
L	-
M	A20 12RD/DB

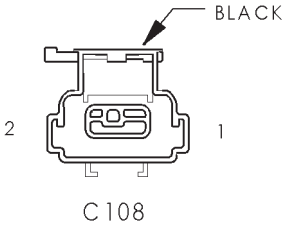

C108 - BLACK (LEFT HEADLAMP AND DASH SIDE)

CAV	CIRCUIT
1	M1 20PK/RD
2	Z1 20BK

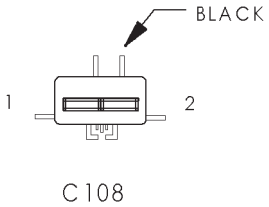

C108 - BLACK (UNDERHOOD LAMP SIDE)

CAV	CIRCUIT
1	M1 20PK/RD
2	Z1 20BK

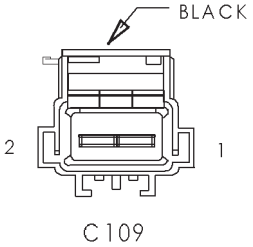

C109 - BLACK (ENGINE SIDE)

CAV	CIRCUIT
1	Z1 18BK
2	T107 18BK/RD

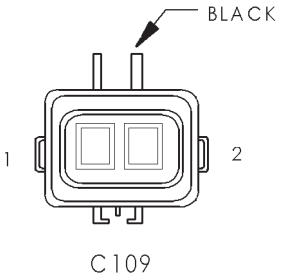

C109 - BLACK (TRANSFER CASE JUMPER SIDE)

CAV	CIRCUIT
1	Z1 18BK
2	T107 18BK

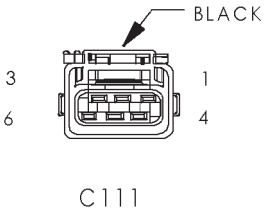

C111 - BLACK (LEFT FRONT LIGHTING MODULE SIDE)

CAV	CIRCUIT
1	L33 18RD
2	L43 18VT
3	L61 20TN/LG
4	L7 20BK/YL
5	-
6	Z1 18BK

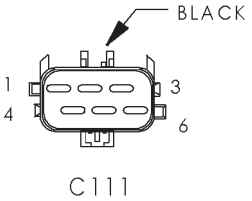

C111 - BLACK (LEFT HEADLAMP AND DASH SIDE)

CAV	CIRCUIT
1	L33 18RD
2	L43 18VT
3	L61 20TN/LG
4	L7 20BK/YL
5	-
6	Z1 18BK

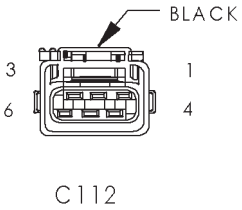

C112 - BLACK (RIGHT FRONT LIGHTING MODULE SIDE)

CAV	CIRCUIT
1	L34 18RD/OR
2	L44 18VT/RD
3	L60 20TN
4	L7 20BK/YL
5	-
6	Z1 18BK

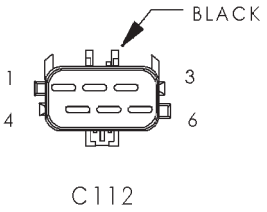

C112 - BLACK (RIGHT HEADLAMP AND DASH SIDE)

CAV	CIRCUIT
1	L34 18RD/OR
2	L44 18VT/RD
3	L60 20TN
4	L7 20BK/YL
5	-
6	Z1 18BK

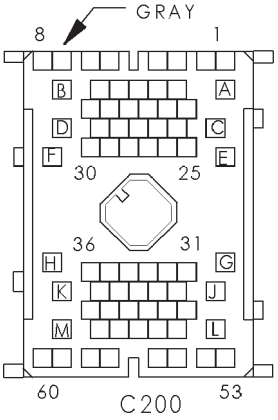

C200 - GRAY (LEFT BODY SIDE)

CAV	CIRCUIT
1	X56 18DB/PK (BASE)
1	X84 18OR/GY (PREMIUM AUDIO)
2	X54 18VT (BASE)
2	X86 18OR/RD (PREMIUM AUDIO)
3	X81 18YL/BK (PREMIUM AUDIO)
3	X55 18BR/RD (BASE)
4	X53 18DG/OR (BASE)
4	X83 18YL/RD (PREMIUM AUDIO)
5	X53 18DG/OR
6	X55 18BR/RD
7	X54 18VT
8	X56 18DB/PK
9	-
10	D20 20LG
11	-
12	-
13	X40 20WT/RD (PREMIUM AUDIO)
14	D25 20YL/VT
15	D25 20YL/VT
16	D32 20LG/DG
17	T107 20BK/RD
18	Z4 20WT/BK (PREMIUM AUDIO)
19	Z41 20WT/DG (PREMIUM AUDIO)
20	T99 18OR/YL
21	D21 20PK
22	K29 18WT/PK
23	X160 20YL (PREMIUM AUDIO)
24	X112 20RD (PREMIUM AUDIO)
25	-
26	-
27	-
28	-
29	Z17 20BK (PREMIUM AUDIO)
30	-
31	G76 18TN/YL
32	-
33	-
34	-
35	X51 18WT/DG

C200 - GRAY (LEFT BODY SIDE)

CAV	CIRCUIT
36	X57 18DG/WT
37	-
38	-
39	V10 22BR
40	X52 18DB/WT
41	X58 18DB/OR
42	-
43	V13 18BR/LG
44	V14 22RD/VT
45	V16 22VT
46	V20 18BK/WT
47	V22 18BR/YL
48	-
49	X64 18BR/WT
50	Z2 20BK/OR
51	Z21 20BK/LG
52	-
53	G39 20DB/OR
54	C8 20DG/RD
55	Z1 16BK
56	V11 20BK/TN
57	G18 20PK/BK
58	V37 22RD/LG
59	V37 20BK/LB
60	-
A	-
B	-
C	A1 12RD
D	-
E	-
F	-
G	A2 12PK/BK
H	C1 12DG
J	-
K	-
L	-
M	-

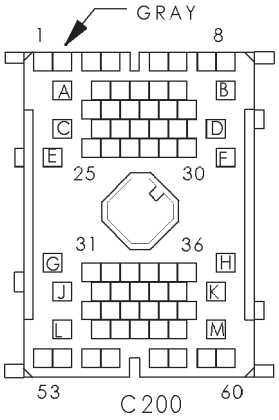

C200 - GRAY (INSTRUMENT PANEL SIDE)

1	X84 18OR/GY
2	X86 18OR/RD
3	X81 18YL/BK
4	X83 18YL/RD
5	X53 18DG/OR
6	X55 18BR/RD
7	X54 18VT
8	X56 18DB/PK
9	-
10	D20 20LG
11	-
12	-

C200 - GRAY (INSTRUMENT PANEL SIDE)

1	X84 18OR/GY
13	X40 22WT/RD
14	D25 20YL/VT/GY
15	D25 20YL/VT/BR
16	D32 20LG/DG
17	T107 20BK/RD
18	Z4 22WT/BK
19	X41 22WT/DG
20	T9 18OR/BK
21	D21 20PK
22	K29 18WT/PK
23	X160 22YL
24	X112 22RD
25	-
26	-
27	-
28	-
29	Z17 22BK
30	-
31	G76 18TN/YL
32	-
33	-
34	-
35	X51 18WT/DG
36	X57 18DG/WT
37	-
38	-
39	V10 20BR
40	X52 18DB/WT
41	X58 18DB/OR
42	-
43	V13 18BR/LG
44	V14 22RD/VT
45	V16 22VT
46	V20 18BK/WT
47	V22 18BR/YL
48	-
49	X64 18BR/WT
50	Z2 20BK/OR
51	Z21 20BK/LG
52	-
53	G39 20DB/OR
54	C8 20DG/RD
55	Z1 16BK
56	V11 20BK/TN
57	G18 20PK/BK
58	V37 20RD/LG
59	K4 20BK/LB
60	-
CAV	CIRCUIT
A	-
B	-
C	A1 12RD
D	-
E	-
F	-

C200 - GRAY (INSTRUMENT PANEL SIDE)

1	X84 18OR/GY
G	A2 12PK/BK
H	C1 12DG
J	-
K	-
L	-
M	-

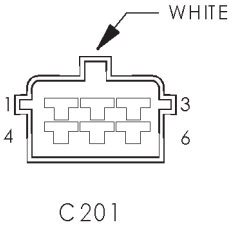

C201 - WHITE (INSTRUMENT PANEL SIDE)

CAV	CIRCUIT
1	E2 20OR
2	Z1 20BK
3	T9 18OR/BK
4	Z1 18BK

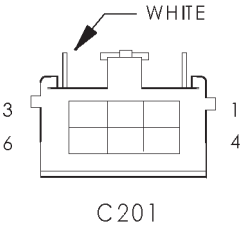

C201 - WHITE (PRNDL SIDE)

CAV	CIRCUIT
1	E2 20LB
2	Z1 20BK
3	T9 18OR/WT
4	Z1 18BK
5	-
6	-

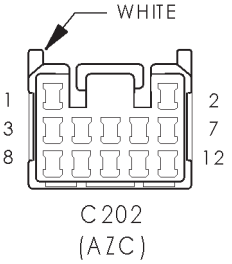

C202 (AZC) - WHITE (INSTRUMENT PANEL SIDE)

CAV	CIRCUIT
1	C32 20GY/DB
2	C100 20YL/DB
3	C33 20DB/RD
4	C95 20WT/BK
5	C94 20WT/DG
6	C96 20WT/DB
7	C102 20TN/BK
8	C35 20DG/YL
9	C56 20RD/LG
10	-
11	-
12	-

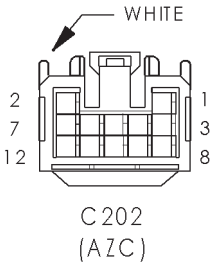

C202 (AZC) - WHITE (A/C SIDE)

CAV	CIRCUIT
1	C32 20VT/OR
2	C100 20LB/DG
3	C33 20PK/DG
4	C95 20VT/WT
5	C94 20DB/RD
6	C96 20DB/WT
7	C102 20YL
8	C35 20TN/BK
9	C56 20BR/LG
10	-
11	-
12	-

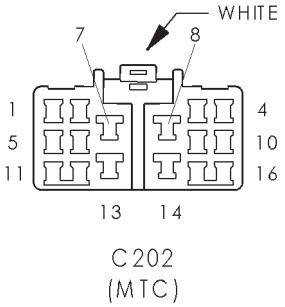

C202 (MTC) - WHITE (INSTRUMENT PANEL SIDE)

CAV	CIRCUIT
1	-
2	-
3	-
4	-
5	C67 20RD/LB
6	-
7	-
8	-
9	-
10	C6 14LB
11	Z2 20BK/OR
12	F22 20WT/PK
13	C7 12BK/TN
14	C1 12DG
15	C4 16TN
16	C5 16LG

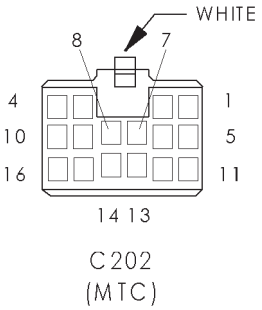

C202 (MTC) - WHITE (A/C SIDE)

CAV	CIRCUIT
1	-
2	-
3	-
4	-
5	C67 20DB/RD
6	WT/YL
7	-
8	-
9	-
10	C6 14LB

C202 (MTC) - WHITE (A/C SIDE)

CAV	CIRCUIT
11	Z2 20VT/WT
12	F22 20PK/DG
13	C7 12BK/TN
14	C1 12RD
15	C4 16TN
16	C5 16LG

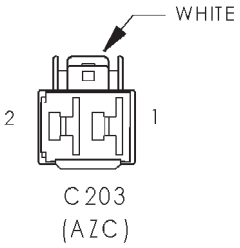

C203 (AZC) - WHITE (INSTRUMENT PANEL SIDE)

CAV	CIRCUIT
1	Z1 12BK
2	C1 12DG

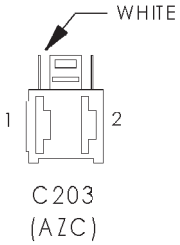

C203 (AZC) - WHITE (A/C SIDE)

CAV	CIRCUIT
1	Z1 12BK
2	C1 12RD

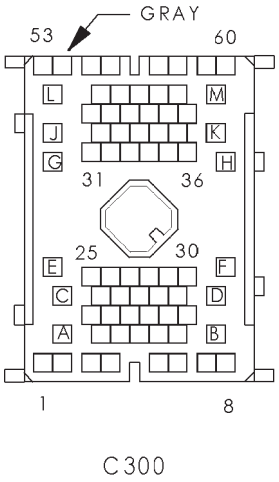

C300 - GRAY (RIGHT BODY SIDE)

CAV	CIRCUIT
1	D25 20YL/VT
2	V13 18BR/LG
3	V22 18BR/YL
4	P112 20YL/WT
5	P114 20YL/RD
6	P35 18OR/VT
7	P36 18PK/VT
8	L50 18WT/TN
9	B1 18YL/DB
10	B2 18YL
11	B3 18LG/DB
12	B4 18LG
13	B41 18YL/PK
14	B42 18TN/WT
15	B43 18PK/OR
16	P29 20BR/WT (HEATED SEATS)
17	P86 20PK/BK (HEATED SEATS)
18	E21 20OR/RD
19	K4 20BK/LB
20	K226 20LB/YL
21	L62 18BR/RD
22	-
23	-

C300 - GRAY (RIGHT BODY SIDE)

CAV	CIRCUIT
24	L1 18VT/BK
25	-
26	-
27	-
28	-
29	-
30	-
31	-
32	-
33	-
34	-
35	-
36	-
37	-
38	-
39	-
40	-
41	-
42	-
43	-
44	-
45	-
46	-
47	-
48	-
49	-
50	-
51	-
52	-
53	X57 18DG/WT (BASE)
53	X91 18WT/DG (EXCEPT BASE)
54	X51 18WT/DG (BASE)
54	X93 18DG/WT (EXCEPT BASE)
55	-
56	-
57	-
58	-
59	-
60	-
A	P130 16DG/WT (HEATED SEATS)
B	Q13 16DB
C	B40 12LB
D	L50 14WT/TN
E	Z5 16BK/VT (HEATED SEATS)
F	-
G	-
H	-
J	-
K	-
L	Q23 16RD/WT
M	A141 16DG/BK

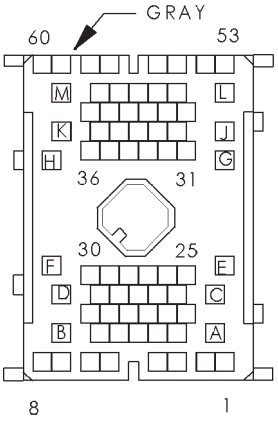

C300

C300 - GRAY (LEFT BODY SIDE)

CAV	CIRCUIT
1	D25 20YL/VT
2	V13 18BR/LG
3	V22 18BR/YL
4	P112 20YL/WT
5	P114 20YL/RD
6	P35 18OR/VT
7	P36 18PK/VT
8	L50 18WT/TN
9	B1 18YL/DB
10	B2 18YL
11	B3 18LG/DB
12	B4 18LG
13	B41 18YL/PK
14	B42 18TN/WT
15	B43 18PK/OR
16	P29 20BR/WT (HEATED SEATS)
17	P86 20PK/BK (HEATED SEATS)
18	E21 20OR/RD
19	K4 20BK/LB
20	K226 20LB/YL
21	L62 18BR/RD
22	-
23	-
24	L1 18VT/BK
25	-
26	-
27	-
28	-
29	-
30	-
31	-
32	-
33	-
34	-
35	-
36	-
37	-
38	-
39	-
40	-
41	-
42	-
43	-
44	-
45	-
46	-
47	-
48	-
49	-
50	-
51	-
52	-
53	X57 18WT/DG

C300 - GRAY (LEFT BODY SIDE)

CAV	CIRCUIT
54	X51 18DG/WT
55	-
56	-
57	-
58	-
59	-
60	-
A	P130 16DG/WT (HEATED SEATS)
B	Q13 16DB
C	B40 12LB
D	L50 14WT/TN
E	Z5 16BK/VT (HEATED SEATS)
F	-
G	-
H	-
J	-
K	-
L	Q23 16RD/WT
M	A141 16DG/BK

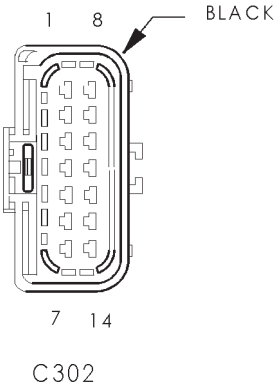

C302 - BLACK (BODY SIDE)

CAV	CIRCUIT
1	P112 20YL/WT
2	P114 20YL/RD
3	D25 20YL/VT
4	Z1 12BK
5	E21 20OR/RD
6	Q13 16DB
7	Q23 16RD/WT
8	F21 12TN/LB
9	X55 18BR/RD (BASE)
9	X85 18LG/DG (PREMIUM)
10	X82 18LB/RD (PREMIUM)
10	X87 18LG/RD (PREMIUM)
10	X53 18DG/OR (BASE)
11	-
12	-
13	-
14	-

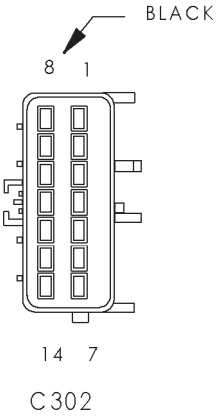

C302 - BLACK (FRONT DRIVER DOOR SIDE)

CAV	CIRCUIT
1	P112 20YL/WT
2	P114 20YL/RD
3	D25 20YL/VT
4	Z1 12BK
5	E21 20OR/RD
6	Q13 16DB
7	Q23 16RD/WT
8	F21 12TN/LB
9	X85 18LG/DG (PREMIUM)
10	X87 18LG/RD (PREMIUM)
11	-
12	-
13	-
14	-

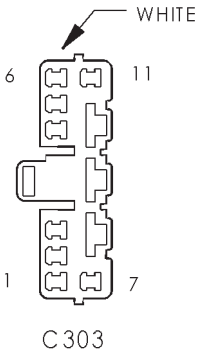

C303 - WHITE (RIGHT BODY SIDE)

CAV	CIRCUIT
1	X58 18DB/OR (BASE AUDIO)
1	X92 18TN/DG (PREMIUM AUDIO)
2	X90 18WT/VT (PREMIUM AUDIO)
2	X52 18DB/WT (BASE AUDIO)
3	E20 20OR/DB
4	P35 18OR/VT
5	P36 18PK/VT
6	-
7	-
8	Q14 16GY
9	Q24 16DG
10	Z1 16BK
11	G76 18TN/YL

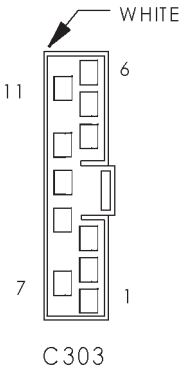

C303 - WHITE (REAR DOOR SIDE)

CAV	CIRCUIT
1	X92 18TN/DG
2	X90 18WT/VT
3	E21 20OR/RD
4	P35 18OR/VT
5	P36 18PK/VT
6	-
7	-
8	Q14 16GY
9	Q24 16DG
10	Z1 16BK
11	G76 18TN/YL

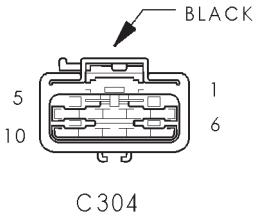

C304 - BLACK (BODY SIDE)

CAV	CIRCUIT
1	P86 20PK/BK
2	P130 16DG/WT
3	D25 20YL/VT
4	F35 16RD
5	Z1 16BK
6	P29 20BR/WT
7	Z2 20BK/OR
8	Z5 16BK/VT
9	-
10	-

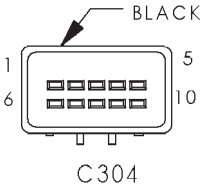

C304 - BLACK (POWER SEAT SIDE)

CAV	CIRCUIT
1	P86 20DG/YL (HEATED SEATS)
2	P130 16DG/WT (HEATED SEATS)
3	D25 20VT/YL (PREMIUM POWER SEATS)
4	F35 16RD
5	Z1 16BK
6	P9 20BR/WT (HEATED SEATS)
7	Z2 20BK/OR (PREMIUM POWER SEATS)
8	Z5 16BK/VT (HEATED SEATS)
9	-
10	-

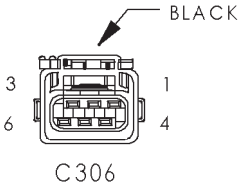

C306 - BLACK (BODY SIDE)

CAV	CIRCUIT
1	P130 16DG/WT
2	Z1 16BK
3	F37 16RD/LB
4	P86 20PK/BK
5	P29 20BR/WT
6	Z5 16BK/VT

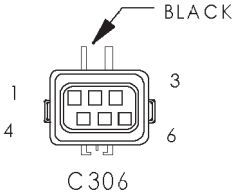

C306 - BLACK (POWER SEAT SIDE)

CAV	CIRCUIT
1	P130 16DG/WT (HEATED SEATS)
2	Z1 16BK
3	F37 16RD/LB
4	P86 20DG/YL (HEATED SEATS)
5	P29 20BR/WT (HEATED SEATS)
6	Z5 16BK/VT (HEATED SEATS)

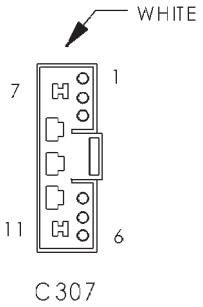

C307 - WHITE (BODY SIDE)

CAV	CIRCUIT
1	X57 18WT/DG
2	X51 18DG/WT
3	E21 20OR/RD
4	P35 18OR/VT
5	P36 18PK/VT
6	-
7	-
8	Q13 16DB
9	Q23 16D/TN
10	Z1 16BK
11	G77 20TN/OR

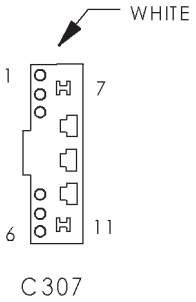

C307 - WHITE (REAR DOOR SIDE)

CAV	CIRCUIT
1	X92 18TN/DG
2	X92 18WT/VT
3	E21 20OR/RD
4	P35 18OR/VT
5	P36 18PK/VT
6	-
7	-
8	Q14 16GY
9	Q24 16DG
10	Z1 16BK
11	G76 18TN/YL

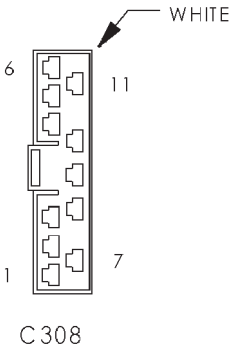

C308 - WHITE (LEFT BODY SIDE)

CAV	CIRCUIT
1	G78 20TN/BK
2	P35 18OR/VT
3	P36 18PK/VT
4	V13 18BR/LG
5	V22 18BR/YL
6	F70 18PK
7	L50 18WT/TN
8	Z1 12BK
9	G80 20VT/YL
10	C15 12BK/WT
11	L7 18BK/YL

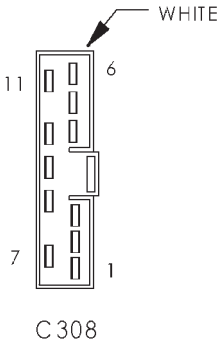

C308 - WHITE (LIFTGATE SIDE)

CAV	CIRCUIT
1	G78 20TN/BK
2	P35 18OR/VT
3	P36 18PK/VT
4	V13 18BR/LG
5	V22 18BR/YL
6	F70 18PK
7	L50 18WT/TN
8	Z1 12BK
9	G80 18VT/YL
10	C15 12BK/WT
11	L7 18BK/YL

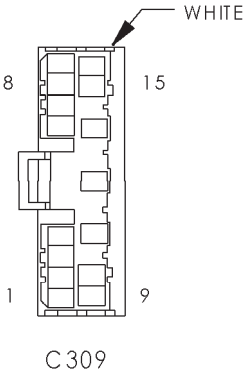

C309 - WHITE (OVERHEAD SIDE)

CAV	CIRCUIT
1	D25 20VT/YL
2	M20 20YL/BK
3	M2 20YL/DG
4	P112 20BK/WT
5	P114 20BK/YL
6	L1 20BK/VT
7	G5 20DB/WT
8	-
9	-
10	F70 20PK
11	Q30 16TN
12	Z1 20BK (EXCEPT SUNROOF)
12	Z1 16BK (SUNROOF)
13	-
14	Z2 20BK/OR
15	G73 20LG/OR

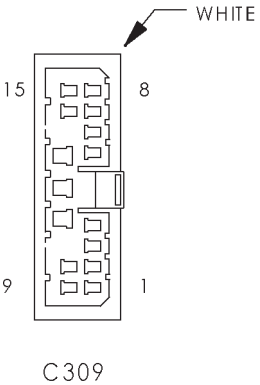

C309 - WHITE (LEFT BODY SIDE)

CAV	CIRCUIT
1	D25 20VT/YL
2	M20 20YL/BK
3	M2 20YL/DG
4	P112 20YL/WT
5	P114 20YL/RD
6	L1 20VT/BK
7	G5 20DB/WT
8	-
9	-
10	F70 20PK
11	Q30 16TN
12	Z1 16BK

C309 - WHITE (LEFT BODY SIDE)

CAV	CIRCUIT
13	-
14	Z2 20BK/OR (PREMIUM POWER SEATS)
14	Z2 18BK/OR (EXCEPT PREMIUM POWER SEATS)
15	G73 20LG/OR

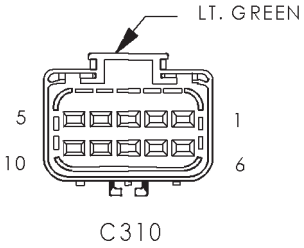

C310 - LT. GREEN (TRAILER TOW SIDE)

CAV	CIRCUIT
1	L50 16WT/TN
2	L62 20BR/RD
3	L1 18VT/BK
4	F30 14RD
5	L7 18BK/YL
6	Z1 14BK
7	B40 14LB
8	Z1 14BK
9	L50 18WT/TN
10	L63 20DG/RD

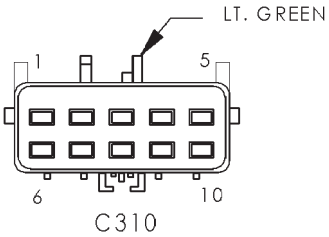

C310 - LT. GREEN (LEFT BODY SIDE)

CAV	CIRCUIT
1	L50 14WT/TN
2	L62 18BR/RD
3	L1 18VT/BK
4	F30 14RD/YL
5	L7 18BK/YL
6	Z1 14BK
7	B40 14LB
8	Z1 14BK
9	L50 18WT/TN
10	L63 20DG/RD

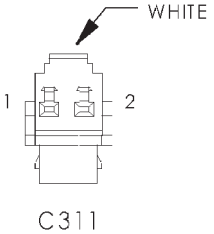

C311 - WHITE (LIFTGATE SIDE)

CAV	CIRCUIT
1	L50 18WT/TN
2	Z1 18BK

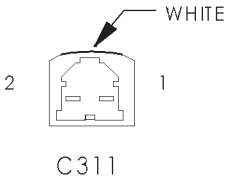

C311 - WHITE (CHMSL SIDE)

CAV	CIRCUIT
1	L50 18WT/TN
2	Z1 18BK

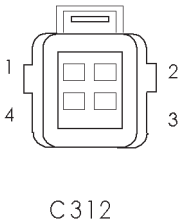

C312 - BLACK (LIFTGATE SIDE)

CAV	CIRCUIT
1	Z1 18BK
2	L7 18BK/YL
3	P101 18OR/PK
4	F70 18PK

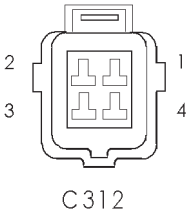

C312 - BLACK (LICENSE PLATE LAMP SIDE)

CAV	CIRCUIT
1	Z1 18BK
2	L7 18BK/YL
3	F70 18PK
4	P101 18OR/PK

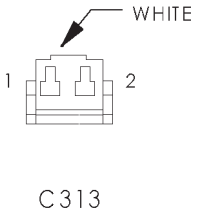

C313 - WHITE (FRONT DRIVER DOOR SIDE)

CAV	CIRCUIT
1	P112 20YL/WT
2	P114 20YL/RD

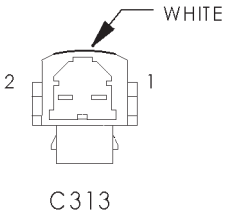

C313 - WHITE (MUX JUMPER SIDE)

CAV	CIRCUIT
1	P112 20YL/WT
2	P114 20YL/RD

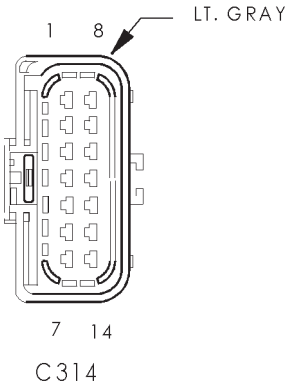

C314 - LT. GRAY (BODY SIDE)

CAV	CIRCUIT
1	D25 20YL/VT
2	F21 12TN/BK
3	P35 18OR/VT
4	P36 18PK/VT
5	Z1 12BK
6	Q14 16GY
7	Q24 16DG
8	E20 20OR/DB
9	X56 18DB/PK (BASE)
9	X80 18LB/BK (PREMIUM)
10	X82 18LB/RD (PREMIUM)
10	X54 18VT (BASE)
11	-
12	-
13	-
14	-

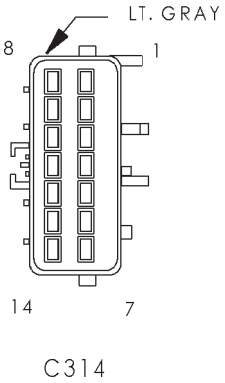

C314 - LT. GRAY (FRONT PASSENGER DOOR SIDE)

CAV	CIRCUIT
1	D25 20YL/VT
2	F21 12TN/BK
3	P35 18OR/VT
4	P36 18PK/VT
5	Z1 12BK
6	Q14 16GY
7	Q24 16DG
8	E20 20OR/DB
9	X80 18LB/BK
10	X82 18LB/RD
11	-
12	-
13	-
14	-

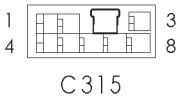

C315 - (OVERHEAD SIDE)

CAV	CIRCUIT
1	Q30 16TN
2	-
3	Q43 20VT
4	Q41 20WT
5	-
6	-
7	Z1 16BK
8	-

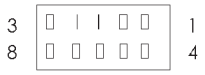

C315

C315 - (SUN ROOF MODULE SIDE)

CAV	CIRCUIT
1	Q30 16TN
2	-
3	Q43 20VT
4	Q41 20WT
5	-
6	-
7	Z1 16BK
8	-

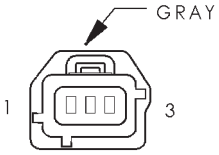

CAMSHAFT POSITION SENSOR

CAMSHAFT POSITION SENSOR - GRAY 3 WAY

CAV	CIRCUIT	FUNCTION
1	K44 18TN/YL	CAMSHAFT POSITION SENSOR SIGNAL
2	K4 18BK/LB	SENSOR GROUND
3	K7 20OR	5V SUPPLY

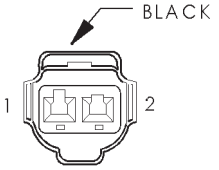

CAPACITOR (4.0 L)

CAPACITOR (4.0L) - BLACK 2 WAY

CAV	CIRCUIT	FUNCTION
1	A142 16DG/OR	AUTOMATIC SHUT DOWN RELAY OUTPUT
2	-	-

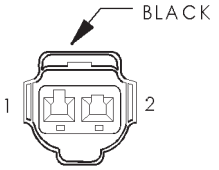

CAPACITOR NO. 1 (4.7 L)

CAPACITOR NO. 1 (4.7L) - BLACK 2 WAY

CAV	CIRCUIT	FUNCTION
1	A142 14DG/OR	AUTOMATIC SHUT DOWN RELAY OUTPUT
2	-	-

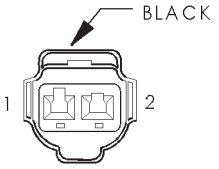

CAPACITOR NO. 2 (4.7 L)

CAPACITOR NO. 2 (4.7L)- BLACK 2 WAY

CAV	CIRCUIT	FUNCTION
1	A142 14DG/OR	AUTOMATIC SHUT DOWN RELAY OUTPUT
2	-	-

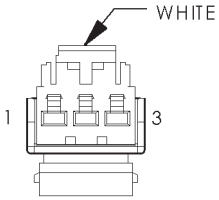

CARGO LAMP

CARGO LAMP - WHITE 3 WAY

CAV	CIRCUIT	FUNCTION
1	F70 20PK	FUSED B(+)
2	G73 20LG/OR	LIFTGATE COURTESY DISABLE
3	M2 20YL/DG	COURTESY LAMP DRIVER

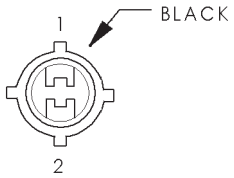

CENTER HIGH MOUNTED STOP LAMP

CENTER HIGH MOUNTED STOP LAMP - BLACK 2 WAY

CAV	CIRCUIT	FUNCTION
1	L50 18WT/TN	BRAKE LAMP SWITCH OUTPUT
2	Z1 18BK	GROUND

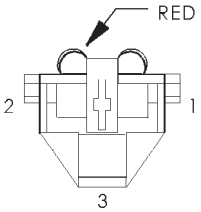

CIGAR LIGHTER

CIGAR LIGHTER - RED 3 WAY

CAV	CIRCUIT	FUNCTION
1	F30 18RD	FUSED CIGAR LIGHTER RELAY OUTPUT
2	-	-
3	Z1 18BK	GROUND

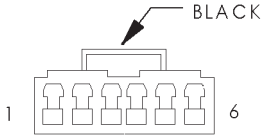

CLOCKSPRING - C1

CLOCKSPRING C1 - BLACK 6 WAY

CAV	CIRCUIT	FUNCTION
1	-	-
2	X4 20GY/OR	HORN RELAY CONTROL
3	X20 20RD/YL	RADIO CONTROL MUX
4	X10 20RD/BK	RADIO CONTROL MUX RETURN
5	K4 20BK/LB	SENSOR GROUND
6	V37 20RD/LG	SPEED CONTROL SWITCH SIGNAL

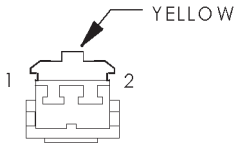

CLOCKSPRING - C2

CLOCKSPRING C2 - YELLOW 2 WAY

CAV	CIRCUIT	FUNCTION
1	R45 18DG/LB	DRIVER AIRBAG LINE 2
2	R43 18BK/LB	DRIVER AIRBAG LINE 1

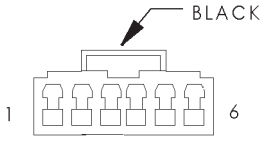

CLOCKSPRING - C3

CLOCKSPRING C3 - GRAY 6 WAY

CAV	CIRCUIT	FUNCTION
1	-	-
2	X4 22GY/OR	HORN RELAY CONTROL
3	X20 20RD/YL	RADIO CONTROL MUX
4	X10 20RD/BK	RADIO CONTROL MUX RETURN
5	K4 20BK/LB	SENSOR GROUND
6	V37 20RD/LG	SPEED CONTROL SWITCH SIGNAL

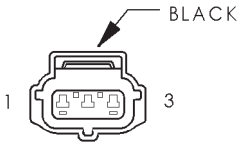

COIL ON PLUG NO. 1 (4.7L)

COIL ON PLUG NO. 1 (4.7L) - BLACK 3 WAY

CAV	CIRCUIT	FUNCTION
1	K91 14TN/RD	COIL DRIVER NO. 1
2	A142 14DG/OR	AUTOMATIC SHUT DOWN RELAY OUTPUT
3	-	-

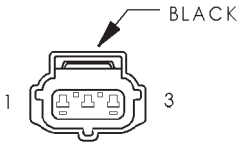

COIL ON PLUG NO. 2 (4.7L)

COIL ON PLUG NO. 2 (4.7L) - BLACK 3 WAY

CAV	CIRCUIT	FUNCTION
1	K92 14TN/PK	COIL DRIVER NO. 2
2	A142 14DG/OR	AUTOMATIC SHUT DOWN RELAY OUTPUT
3	-	-

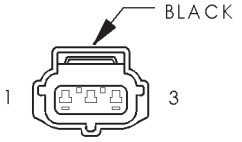

COIL ON PLUG NO. 3 (4.7L)

COIL ON PLUG NO. 3 (4.7L) - BLACK 3 WAY

CAV	CIRCUIT	FUNCTION
1	K93 14TN/OR	COIL DRIVER NO. 3
2	A142 14DG/OR	AUTOMATIC SHUT DOWN RELAY OUTPUT
3	-	-

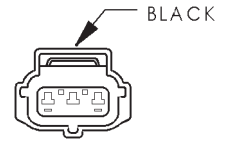

COIL ON PLUG NO. 4 (4.7L)

COIL ON PLUG NO. 4 (4.7L) - BLACK 3 WAY

CAV	CIRCUIT	FUNCTION
1	K94 14TN/LG	COIL DRIVER NO. 4
2	A142 14DG/OR	AUTOMATIC SHUT DOWN RELAY OUTPUT
3	-	-

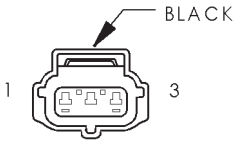

COIL ON PLUG NO. 5 (4.7L)

COIL ON PLUG NO. 5 (4.7L) - BLACK 3 WAY

CAV	CIRCUIT	FUNCTION
1	K95 14TN/DG	COIL DRIVER NO. 5
2	A142 14DG/OR	AUTOMATIC SHUT DOWN RELAY OUTPUT
3	-	-

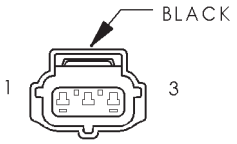

COIL ON PLUG NO. 6 (4.7L)

COIL ON PLUG NO. 6 (4.7L) - BLACK 3 WAY

CAV	CIRCUIT	FUNCTION
1	K96 14TN/LB	COIL DRIVER NO. 6
2	A142 14DG/OR	AUTOMATIC SHUT DOWN RELAY OUTPUT
3	-	-

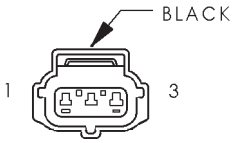

COIL ON PLUG NO. 7 (4.7L)

COIL ON PLUG NO. 7 (4.7L) - BLACK 3 WAY

CAV	CIRCUIT	FUNCTION
1	K97 14BR	COIL DRIVER NO. 7
2	A142 14DG/OR	AUTOMATIC SHUT DOWN RELAY OUTPUT
3	-	-

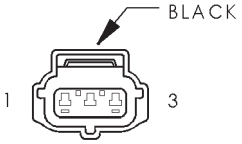

COIL ON PLUG NO. 8 (4.7L)

COIL ON PLUG NO. 8 (4.7L) - BLACK 3 WAY

CAV	CIRCUIT	FUNCTION
1	K98 14LB/RD	COIL DRIVER NO. 8
2	A142 14DG/OR	AUTOMATIC SHUT DOWN RELAY OUTPUT
3	-	-

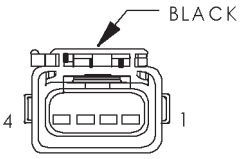

COIL RAIL (4.0L)

COIL RAIL (4.0L) - BLACK 4 WAY

CAV	CIRCUIT	FUNCTION
1	K91 16TN/RD	COIL DRIVER NO. 1
2	A142 16DG/OR	AUTOMATIC SHUT DOWN RELAY OUTPUT
3	K92 16TN/PK	COIL DRIVER NO. 2
4	K93 16TN/OR	COIL DRIVER NO. 3

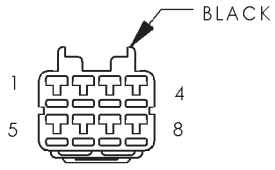

COMPACT DISC CHANGER (PREMIUM AUDIO)

COMPACT DISC CHANGER (PREMIUM AUDIO) - BLACK 8 WAY

CAV	CIRCUIT	FUNCTION
1	X40 20WT/RD	AUDIO OUT RIGHT
2	C235 30WT/LB	SHIELD
3	D25 20YL/VT	PCI BUS
4	X112 20RD	IGNITION SWITCH OUTPUT
5	X41 20WT/DG	AUDIO OUT LEFT
6	Z4 20WT/BK	GROUND
7	Z17 20BK	GROUND
8	X160 20YL	B(+)

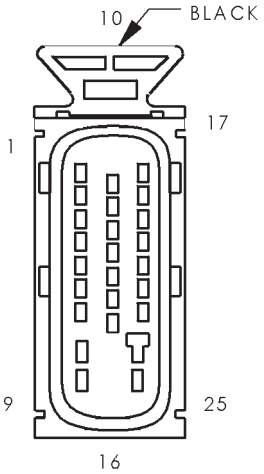

CONTROLLER ANTILOCK BRAKE

CONTROLLER ANTILOCK BRAKE - BLACK 25 WAY

CAV	CIRCUIT	FUNCTION
1	B9 18RD	LEFT FRONT WHEEL SPEED SENSOR SIGNAL
2	B8 18RD/DB	LEFT FRONT WHEEL SPEED SENSOR 12 VOLT SUPPLY
3	G7 18WT/OR	VEHICLE SPEED SENSOR SIGNAL
4	F20 18DB/PK	FUSED IGNITION SWITCH OUTPUT (RUN)
5	B4 18LG	LEFT REAR WHEEL SPEED SENSOR SIGNAL
6	B3 18LG/DB	LEFT REAR WHEEL SPEED SENSOR 12 VOLT SUPPLY
7	-	-
8	Z3 12BK/OR	GROUND
9	A20 12RD/DB	FUSED B(+)
10	D25 18YL/VT	PCI BUS
11	-	-
12	Z1 18BK	GROUND
13	B43 18PK/OR	G SWITCH TEST SIGNAL
14	B41 18YL/PK	G SWITCH NO. 1 SENSE
15	-	-
16	-	-
17	B42 18TN/WT	G SWITCH NO. 2 SENSE
18	L50 18WT/TN	PRIMARY BRAKE SWITCH SIGNAL
19	B7 18WT	RIGHT FRONT WHEEL SPEED SENSOR SIGNAL
20	B6 18WT/DB	RIGHT FRONT WHEEL SPEED SENSOR 12 VOLT SUPPLY
21	G9 18GY/BK	BRAKE FLUID LEVEL SWITCH SENSE
22	B1 18YL/DB	RIGHT REAR WHEEL SPEED SENSOR 12 VOLT SUPPLY
23	B2 18YL	RIGHT REAR WHEEL SPEED SENSOR SIGNAL
24	Z3 12BK/OR	GROUND
25	A10 12RD/DG	FUSED B(+)

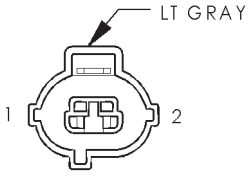

COOLANT LEVEL SENSOR

COOLANT LEVEL SENSOR - LT. GRAY 2 WAY

CAV	CIRCUIT	FUNCTION
1	G18 20PK/BK	COOLANT LEVEL SWITCH SENSE
2	Z1 20BK	GROUND

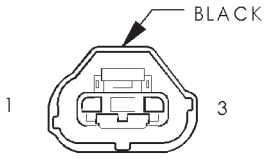

CRANKSHAFT POSITION SENSOR

CRANKSHAFT POSITION SENSOR - BLACK 3 WAY

CAV	CIRCUIT	FUNCTION
1	K24 18GY/BK	CRANKSHAFT POSITION SENSOR SIGNAL
2	K4 18BK/LB	SENSOR GROUND
3	K7 20OR	5V SUPPLY

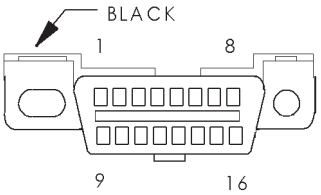

DATA LINK CONNECTOR

DATA LINK CONNECTOR - BLACK 16 WAY

CAV	CIRCUIT	FUNCTION
1	-	-
2	D25 20YL/VT	PCI BUS
3	-	-
4	Z2 20BK/OR	GROUND
5	Z21 20BK/LG	GROUND
6	D32 20LG/DG	SCI RECEIVE
7	D21 20PK	SCI TRANSMIT
8	-	-
9	D19 20VT/OR	BODY CONTROL MODULE FLASH ENABLE
10	-	-
11	-	-
12	-	-
13	-	-
14	D20 20LG	SCI RECEIVE
15	-	-
16	F33 20PK/RD	FUSED B(+)

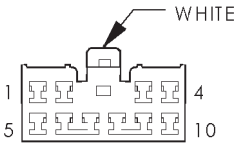

DIAGNOSTIC JUNCTION PORT

DIAGNOSTIC JUNCTION PORT - WHITE 10 WAY

CAV	CIRCUIT	FUNCTION
1	D25 20YL/VT/BR	PCI BUS (PCM TCM PDM CD SKIM)
2	D25 20YL/VT/GY	PCI BUS (DDM ABS MEM EVIC)
3	D25 20YL/VT/DG (AZC)	PCI BUS (AZC)
4	D25 18YL/VT/DB	PCI BUS (RADIO)
5	D25 18YL/VT/OR	PCI BUS (ACM)
6	D25 20YL/VT/RD	PCI BUS (MIC)
7	-	-
8	D25 20YL/VT/WT	PCI BUS (BCM)
9	D25 20YL/VT	PCI BUS (DLC)
10	-	-

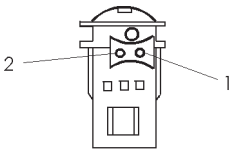

DRIVER AIRBAG

DRIVER AIRBAG - 2 WAY

CAV	CIRCUIT	FUNCTION
1	R43 18BK	DRIVER AIRBAG LINE 2
2	R45 18BK	DRIVER AIRBAG LINE 1

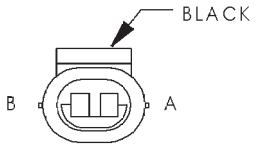

DRIVER BLEND DOOR MOTOR/ACTUATOR (AZC)

DRIVER BLEND DOOR MOTOR/ACTUATOR (AZC) - BLACK 2 WAY

CAV	CIRCUIT	FUNCTION
A	C95 20VT/WT	DRIVER BLEND DOOR DRIVER (B)
B	C33 20PK/DG	DRIVER BLEND DOOR DRIVER (A)

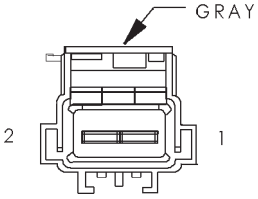

DRIVER CYLINDER LOCK SWITCH

DRIVER CYLINDER LOCK SWITCH - GRAY 2 WAY

CAV	CIRCUIT	FUNCTION
1	G73 20LG/OR	DRIVER CYLINDER SWITCH SENSE
2	Z1 20BK	GROUND

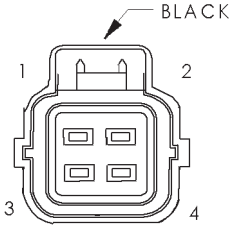

DRIVER DOOR POWER LOCK MOTOR/ AJAR SWITCH

DRIVER DOOR LOCK MOTOR/AJAR SWITCH - BLACK 4 WAY

CAV	CIRCUIT	FUNCTION
1	G75 18TN/RD	DRIVER DOOR AJAR SWITCH SENSE
2	Z1 18BK	GROUND
3	P34 18PK/BK	DRIVER DOOR UNLOCK DRIVER
4	P35 18OR/BK	DRIVER DOOR LOCK DRIVER

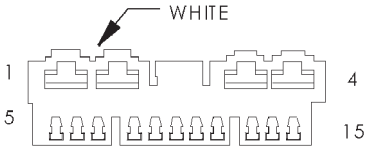

DRIVER DOOR MODULE-C1

DRIVER DOOR MODULE C1 - WHITE 15 WAY

CAV	CIRCUIT	FUNCTION
1	F21 12TN/LB	FUSED B(+)
2	Q23 16RD/WT	DRIVER REAR WINDOW DRIVER (DOWN)
3	Q13 16DB	DRIVER REAR WINDOW DRIVER (UP)
4	Z1 12BK	GROUND
5	P35 18OR/BK	DRIVER DOOR LOCK DRIVER
6	-	-
7	P34 18PK/BK	DRIVER DOOR UNLOCK DRIVER
8	-	-
9	D25 20YL/VT	PCI BUS
10	G73 20LG/OR	DRIVER DOOR CYLINDER LOCK SWITCH SENSE
11	G75 18TN/RD	DRIVER DOOR AJAR SWITCH SENSE
12	E21 20OR/RD	DRIVER DOOR SWITCH ILLUMINATION
13	Q11 16LB	DRIVER WINDOW DRIVER (UP)
14	-	-
15	Q21 16WT	DRIVER WINDOW DRIVER (DOWN)

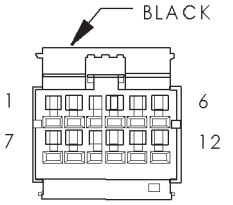

DRIVER DOOR MODULE-C2

DRIVER DOOR MODULE C2 - BLACK 12 WAY

CAV	CIRCUIT	FUNCTION
1	P95 20OR	MIRROR HORIZONTAL DRIVER
2	C118 20BK/WT	MIRROR HEATER GROUND
3	P64 20VT	MIRROR VERTICAL POSITION SIGNAL
4	P69 20GY	MIRROR SENSOR GROUND
5	P65 20DG	MIRROR HORIZONTAL POSITION SIGNAL
6	C117 20BK	MIRROR HEATER 12VOLT SUPPLY
7	P91 20WT	MIRROR COMMON DRIVER
8	P93 20RD	MIRROR VERTICAL DRIVER
9	M21 20PK/DG	COURTESY LAMP DRIVER
10	-	-
11	-	-
12	L121 20BK/RD	COURTESY LAMP GROUND

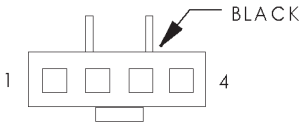

DRIVER DOOR MODULE-C3

DRIVER DOOR MODULE C3 - BLACK 4 WAY

CAV	CIRCUIT	FUNCTION
1	BK	MEMORY SWITCH RETURN
2	BR	MEMORY SWITCH MUX
3	OR	MEMORY SET INDICATOR DRIVER
4	GY	SWITCH ILLUMINATION DRIVER

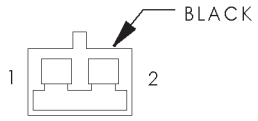

DRIVER FRONT DOOR COURTESY LAMP

DRIVER FRONT DOOR COURTESY LAMP - BLACK 2 WAY

CAV	CIRCUIT	FUNCTION
1	M21 20PK/DG	COURTESY LAMP DRIVER
2	L121 20BK/RD	COURTESY LAMP GROUND

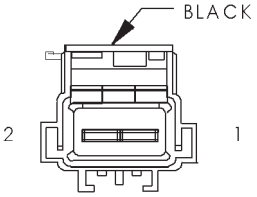

DRIVER FRONT POWER WINDOW MOTOR

DRIVER FRONT POWER WINDOW MOTOR - BLACK 2 WAY

CAV	CIRCUIT	FUNCTION
1	Q21 16WT	DRIVER WINDOW DRIVER (DOWN)
2	Q11 16LB	DRIVER WINDOW DRIVER (UP)

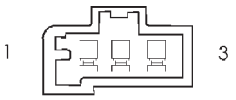

DRIVER HEATED SEAT BACK (PREMIUM I/III)

DRIVER HEATED SEAT BACK (PREMIUM I/III) - 3 WAY

CAV	CIRCUIT	FUNCTION
1	P88 16BK/BR	HEATED SEAT DRIVER
2	Z6 16BK/YL	GROUND
3	-	-

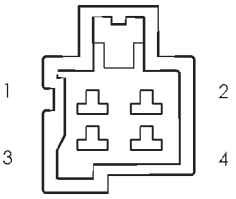

DRIVER HEATED SEAT CUSHION (PREMIUM I/III)

DRIVER HEATED SEAT CUSHION (PREMIUM I/III) - 4 WAY

CAV	CIRCUIT	FUNCTION
1	P131 16BK/OR	DRIVER SEAT HEATER B(+) DRIVER
2	P88 16BK/BR	HEATED SEAT DRIVER
3	P135 20LB/BK	DRIVER SEAT TEMPERATURE SENSOR INPUT
4	P29 20BR/WT	SEAT SENSOR 5V SUPPLY

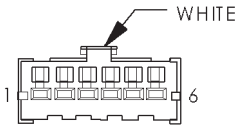

DRIVER HEATED SEAT SWITCH

DRIVER HEATED SEAT SWITCH - WHITE 6 WAY

CAV	CIRCUIT	FUNCTION
1	P133 20LG/RD	DRIVER SEAT HEATER SWITCH MUX
2	E2 20OR	PANEL LAMPS DRIVER
3	F22 20WT/PK	FUSED IGNITION SWITCH OUTPUT (RUN)
4	-	-
5	Z1 20BK	GROUND
6	P132 20OR/BK	SEAT HEATER SWITCH SENSOR GROUND

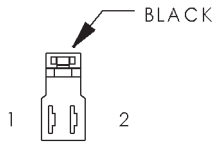

DRIVER LUMBAR MOTOR (MIDLINE/PREMIUM)

DRIVER LUMBAR MOTOR (MIDLINE/PREMIUM) - BLACK 2 WAY

CAV	CIRCUIT	FUNCTION
1	P105 16LG/DB	LUMBAR FORWARD SWITCH SENSE
2	P104 16YL/RD	LUMBAR REARWARD SWITCH SENSE

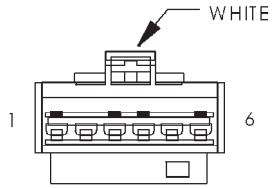

DRIVER LUMBAR SWITCH (MIDLINE/PREMIUM)

DRIVER LUMBAR SWITCH (MIDLINE/PREMIUM) - WHITE 6 WAY

CAV	CIRCUIT	FUNCTION
1	-	-
2	Z1 16BK	GROUND
3	P104 16YL/RD	LUMBAR REAR WARD SWITCH SENSE
4	P105 16LG/DB	LUMBAR FORWARD SWITCH SENSE
5	Z1 16BK	GROUND
6	F35 16RD	FUSED B(+)

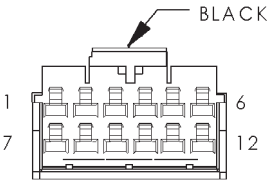

DRIVER POWER MIRROR

DRIVER POWER MIRROR - BLACK 12 WAY

CAV	CIRCUIT	FUNCTION
1	C117 20BK	MIRROR HEATER 12 VOLT SUPPLY
2	P65 20DG	MIRROR HORIZONTAL POSITION SIGNAL
3	P69 20GY	MIRROR SENSOR GROUND
4	P64 20VT	MIRROR VERTICAL POSITION SIGNAL
5	C118 20BK/WT	MIRROR HEATER GROUND
6	P95 20OR	MIRROR HORIZONTAL DRIVER
7	P114 20YL/RD	AUTO DAY NIGHT MIRROR(-)
8	-	-
9	-	-
10	P112 20YL/WT	AUTO DAY NIGHT MIRROR(+)
11	P93 20RD	MIRROR VERTICAL DRIVER
12	P91 20WT	MIRROR COMMON DRIVER

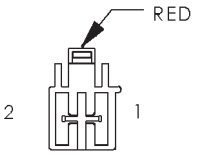

DRIVER POWER SEAT FRONT RISER MOTOR

DRIVER POWER SEAT FRONT RISER MOTOR - RED 2 WAY

CAV	CIRCUIT	FUNCTION
1	P119 16YL/RD (PREMIUM II/III)	SEAT FRONT UP DRIVER
1	P19 16YL/LG (EXCEPT PREMIUM II/III)	DRIVER SEAT FRONT UP DRIVER
2	P121 16RD/GY (PREMIUM II/III)	SEAT FRONT DOWN DRIVER
2	P21 16RD/LG (EXCEPT PREMIUM II/III)	DRIVER SEAT FRONT DOWN DRIVER

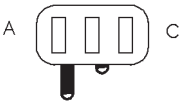

DRIVER POWER SEAT FRONT RISER MOTOR SENSOR (PREMIUM II/III)

DRIVER POWER SEAT FRONT RISER MOTOR SENSOR (PREMIUM II/III) - 3 WAY

CAV	CIRCUIT	FUNCTION
A	P28 20BR/RD	SEAT POSITION SENSOR GROUND
B	P26 20BR	FRONT RISER POSITION SIGNAL
C	P29 20BR/WT	SEAT SENSOR 5V SUPPLY

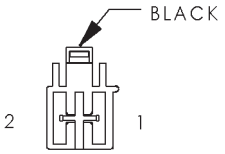

DRIVER POWER SEAT HORIZONTAL MOTOR

DRIVER POWER SEAT HORIZONTAL MOTOR - BLACK 2 WAY

CAV	CIRCUIT	FUNCTION
1	P17 16RD/YL (EXCEPT PREMIUM II/III)	DRIVER SEAT HORIZONTAL REARWARD DRIVER
1	P117 16RD/BR (PREMIUM II/III)	SEAT HORIZONTAL REARWARD DRIVER
2	P15 16YL/LB (EXCEPT PREMIUM II/III)	DRIVER SEAT HORIZONTAL FORWARD DRIVER
2	P115 16GY/G (PREMIUM II/III)	SEAT HORIZONTAL FORWARD DRIVER

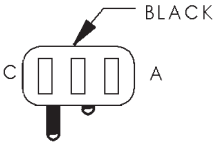

DRIVER POWER SEAT HORIZONTAL MOTOR SENSOR (PREMIUM II/III)

DRIVER POWER SEAT HORIZONTAL MOTOR SENSOR (PREMIUM II/III) - BLACK 3 W

CAV	CIRCUIT	FUNCTION
A	P29 20BR/WT	SEAT SENSOR 5V SUPPLY
B	P25 20VT/RD	SEAT HORIZONTAL POSITION SIGNAL
C	P28 20BR/RD	SEAT POSITION SENSOR GROUND

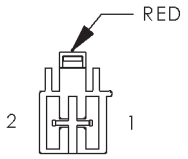

DRIVER POWER SEAT REAR RISER MOTOR

DRIVER POWER SEAT REAR RISER MOTOR - RED 2 WAY

CAV	CIRCUIT	FUNCTION
1	P11 16YL/WT (EXCEPT PREMIUM II/III)	DRIVER SEAT REAR UP DRIVER
1	P111 16YL/DB (PREMIUM II/III)	SEAT REAR UP DRIVER
2	P13 16RD/WT (EXCEPT PREMIUM II/III)	DRIVER SEAT REAR DOWN DRIVER
2	P113 16RD/BK (PREMIUM II/III)	SEAT REAR DOWN DRIVER

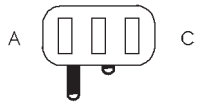

DRIVER POWER SEAT REAR RISER MOTOR SENSOR (PREMIUM II/III)

DRIVER POWER SEAT REAR RISER MOTOR SENSOR (PREMIUM II/III) - 3 WAY

CAV	CIRCUIT	FUNCTION
A	P28 20BR/RD	SEAT POSITION SENSOR GROUND
B	P27 20LB/RD	REAR RISER POSITION SIGNAL
C	P29 20BR/WT	SEAT SENSOR 5V SUPPLY

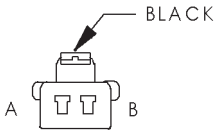

DRIVER POWER SEAT RECLINER MOTOR

DRIVER POWER SEAT RECLINER MOTOR - BLACK 2 WAY

CAV	CIRCUIT	FUNCTION
A	P41 16GY/WT (EXCEPT PREMIUM II/III)	RECLINER DOWN SWITCH SENSE
A	P141 16GY/WT (PREMIUM II/III)	SEAT RECLINER DOWN DRIVER
B	P43 16GY/LB (EXCEPT PREMIUM II/III)	RECLINER UP SWITCH SENSE
B	P143 16GY/LB (PREMIUM II/III)	SEAT RECLINER UP DRIVER

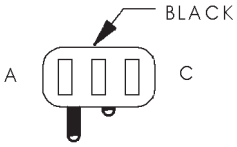

DRIVER POWER SEAT RECLINER MOTOR SENSOR (PREMIUM II/III)

DRIVER POWER SEAT RECLINER MOTOR SENSOR (PREMIUM II/III) - BLACK 3-WAY

CAV	CIRCUIT	FUNCTION
A	P29 20BR/WT	SEAT SENSOR 5V SUPPLY
B	P47 20LB	RECLINER POSITION SIGNAL
C	P28 20BR/RD	SEAT POSITION SENSOR GROUND

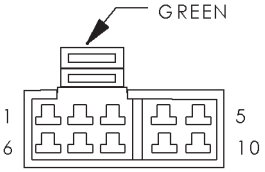

DRIVER POWER SEAT SWITCH (MIDLINE/ PREMIUM)

DRIVER POWER SEAT SWITCH (MIDLINE/PREMIUM) - GREEN 10 WAY

CAV	CIRCUIT	FUNCTION
1	Z1 16BK	GROUND
2	P43 20GY/LB (PREMIUM II/III)	RECLINER UP SWITCH SENSE
2	P43 16GY/LB (MIDLINE/PREMIUM I)	DRIVER SEAT RECLINER UP DRIVER
3	P17 16RD/YL (MIDLINE/PREMIUM I)	DRIVER SEAT HORIZONTAL REARWARD DRIVER
3	P17 20RD/YL (PREMIUM II/III)	DRIVER SEAT HORIZONTAL REARWARD SWITCH SENSE
4	P41 16GY/WT (MIDLINE/PREMIUM I)	DRIVER SEAT RECLINER DOWN DRIVER
4	P41 20GY/WT (PREMIUM II/III)	RECLINER DOWN SWITCH SENSE
5	F35 16RD (MIDLINE/PREMIUM I)	FUSED B(+)
5	P9 20RD/LB (PREMIUM II/III)	SEAT SWITCH B(+) SUPPLY
6	P15 16YL/LB (MIDLINE/PREMIUM I)	DRIVER SEAT HORIZONTAL FORWARD DRIVER
6	P15 20YL/LB (PREMIUM II/III)	DRIVER SEAT HORIZONTAL FORWARD SWITCH SENSE
7	P19 16YL/LG (MIDLINE/PREMIUM I)	DRIVER SEAT FRONT UP DRIVER
7	P19 20YL/LG (PREMIUM II/III)	DRIVER SEAT FRONT UP SWITCH SENSE
8	P11 20YL/WT (PREMIUM II/III)	SEAT REAR UP SWITCH SENSE
8	P11 16YL/WT (MIDLINE/PREMIUM I)	DRIVER SEAT REAR UP DRIVER
9	P13 20RD/WT (PREMIUM II/III)	SEAT REAR DOWN SWITCH SENSE
9	P13 16RD/WT (MIDLINE/PREMIUM I)	DRIVER SEAT REAR DOWN DRIVER
10	P21 20RD/LG (PREMIUM II/III)	DRIVER SEAT FRONT DOWN SWITCH SENSE
10	P21 16RD/LG (MIDLINE/PREMIUM I)	DRIVER SEAT FRONT DOWN DRIVER

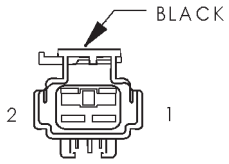

DRIVER REAR POWER WINDOW MOTOR

DRIVER REAR POWER WINDOW MOTOR - BLACK 2 WAY

CAV	CIRCUIT	FUNCTION
1	Q124 16DG/WT	WINDOW DRIVER (DOWN)
2	Q114 16GY/WT	WINDOW DRIVER (UP)

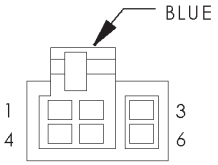

DRIVER REAR POWER WINDOW SWITCH

DRIVER REAR POWER WINDOW SWITCH - BLUE 6 WAY

CAV	CIRCUIT	FUNCTION
1	Q14 16GY	DRIVER REAR WINDOW DRIVER UP
2	Q114 16GY/WT	WINDOW DRIVER UP
3	E21 20OR/RD	DRIVER REAR DOOR SWITCH ILLUMINATION
4	Q24 16DG	DRIVER REAR WINDOW DRIVER DOWN
5	Q124 16DG/WT	WINDOW DRIVER DOWN
6	Z1 16BK	GROUND

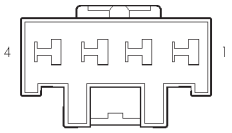

ELECTRIC BRAKE

ELECTRIC BRAKE - 4 WAY

CAV	CIRCUIT	FUNCTION
1	Z1 14BK	GROUND
2	L50 18WT/TN	BRAKE LAMP SWITCH OUTPUT
3	B40 12LB	TRAILER TOW BRAKE B(+)
4	L50 14WT/TN	BRAKE LAMP SWITCH OUTPUT

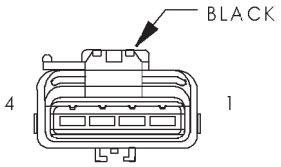

ELECTRONIC SPEED CONTROL SERVO

ELECTRONIC SPEED CONTROL SERVO - BLACK 4 WAY

CAV	CIRCUIT	FUNCTION
1	V36 18TN/RD	SPEED CONTROL VACUUM SOLENOID CONTROL
2	V35 18LG/RD	SPEED CONTROL VENT SOLENOID CONTROL
3	V30 20DB/RD	SPEED CONTROL BRAKE SWITCH OUTPUT
4	Z1 20BK	GROUND

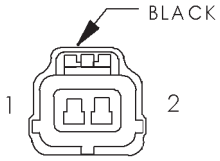

ENGINE COOLANT TEMPERATURE SENSOR

ENGINE COOLANT TEMPERATURE SENSOR - BLACK 2 WAY

CAV	CIRCUIT	FUNCTION
1	K4 18BK/LB	SENSOR GROUND
2	K2 18TN/BK	ENGINE COOLANT TEMPERATURE SENSOR SIGNAL

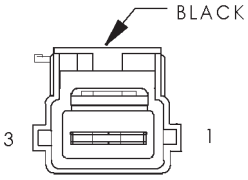

ENGINE OIL PRESSURE SENSOR

ENGINE OIL PRESSURE SENSOR - BLACK 3 WAY

CAV	CIRCUIT	FUNCTION
1	K6 18VT/BK	5V SUPPLY
2	G60 18GY/YL	ENGINE OIL PRESSURE SENSOR SIGNAL
3	K4 18BK/LB	SENSOR GROUND

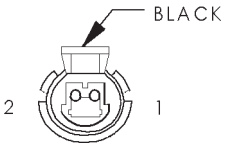

EVAP/PURGE SOLENOID

EVAP/PURGE SOLENOID - BLACK 2 WAY

CAV	CIRCUIT	FUNCTION
1	F99 20OR	FUSED IGNITION SWITCH OUTPUT (RUN-START)
2	K52 20PK/BK	DUTY CYCLE EVAP/PURGE SOLENOID CONTROL

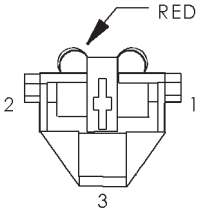

FRONT POWER OUTLET

FRONT POWER OUTLET - RED 3 WAY

CAV	CIRCUIT	FUNCTION
1	A148 16VT	FUSED B(+)
2	-	-
3	Z1 16BK	GROUND

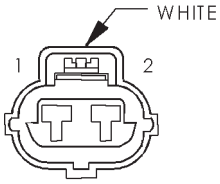

FRONT WASHER PUMP

FRONT WASHER PUMP - WHITE 2 WAY

CAV	CIRCUIT	FUNCTION
1	V10 20R	WASHER PUMP MOTOR SWITCH SENSE
2	Z1 20BK	GROUND

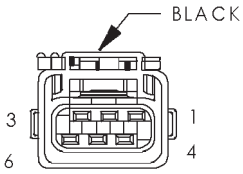

FRONT WIPER MOTOR

FRONT WIPER MOTOR - BLACK 6 WAY

CAV	CIRCUIT	FUNCTION
1	V6 16DB	FUSED IGNITION SWITCH OUTPUT (RUN-ACC)
2	V55 16TN/RD	WIPER PARK SWITCH SENSE
3	-	-
4	Z1 16BK	GROUND
5	V3 16BR/WT	WIPER HIGH/LOW RELAY LOW SPEED OUTPUT
6	V4 16RD/YL	WIPER HIGH/LOW RELAY HIGH SPEED OUTPUT

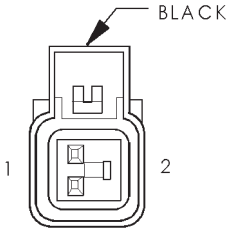

FUEL INJECTOR NO. 1

FUEL INJECTOR NO. 1 - BLACK 2 WAY

CAV	CIRCUIT	FUNCTION
1	K11 18WT/DB	FUEL INJECTOR NO. 1 DRIVER
2	F42 18DG/LG	FUSED AUTOMATIC SHUT DOWN RELAY OUTPUT

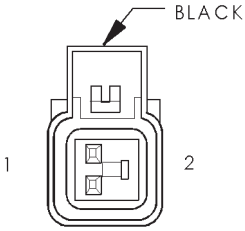

FUEL INJECTOR NO. 2

FUEL INJECTOR NO. 2 - BLACK 2 WAY

CAV	CIRCUIT	FUNCTION
1	K12 18TN	FUEL INJECTOR NO. 2 DRIVER
2	F42 18DG/LG	FUSED AUTOMATIC SHUT DOWN RELAY OUTPUT

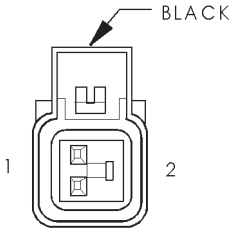

FUEL INJECTOR NO. 3

FUEL INJECTOR NO. 3 - BLACK 2 WAY

CAV	CIRCUIT	FUNCTION
1	K13 18YL/WT	FUEL INJECTOR NO. 3 DRIVER
2	F42 18DG/LG	FUSED AUTOMATIC SHUT DOWN RELAY OUTPUT

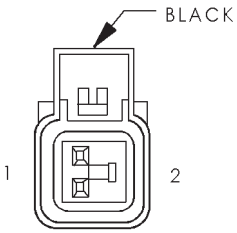

FUEL INJECTOR NO. 4

FUEL INJECTOR NO. 4 - BLACK 2 WAY

CAV	CIRCUIT	FUNCTION
1	K14 18LB/BR	FUEL INJECTOR NO. 4 DRIVER
2	F42 18DG/LG	FUSED AUTOMATIC SHUT DOWN RELAY OUTPUT

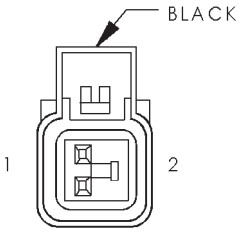

FUEL INJECTOR NO. 5

FUEL INJECTOR NO. 5 - BLACK 2 WAY

CAV	CIRCUIT	FUNCTION
1	K38 18GY	FUEL INJECTOR NO. 5 DRIVER
2	F42 18DG/LG	FUSED AUTOMATIC SHUT DOWN RELAY OUTPUT

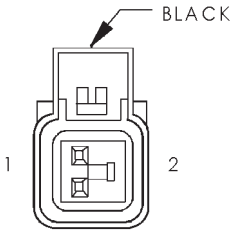

FUEL INJECTOR NO. 6

FUEL INJECTOR NO. 6 - BLACK 2 WAY

CAV	CIRCUIT	FUNCTION
1	K58 18BR/DB	FUEL INJECTOR NO. 7 DRIVER
2	F42 18DG/LG	FUSED AUTOMATIC SHUT DOWN RELAY OUTPUT

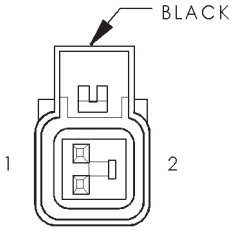

FUEL INJECTOR NO. 7 (4.7L)

FUEL INJECTOR NO. 7 (4.7L) - BLACK 2 WAY

CAV	CIRCUIT	FUNCTION
1	K17 18DB/TN	FUEL INJECTOR NO. 7 DRIVER
2	F42 18DG/LG	FUSED AUTOMATIC SHUT DOWN RELAY OUTPUT

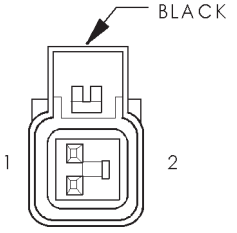

FUEL INJECTOR NO. 8 (4.7L)

FUEL INJECTOR NO. 8 (4.7L) - BLACK 2 WAY

CAV	CIRCUIT	FUNCTION
1	K18 18DB/GY	FUEL INJECTOR NO. 8 DRIVER
2	F42 18DG/LG	FUSED AUTOMATIC SHUT DOWN RELAY OUTPUT

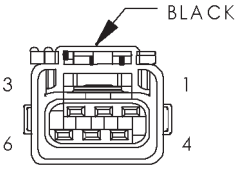

FUEL PUMP MODULE

FUEL PUMP MODULE - BLACK 6 WAY

CAV	CIRCUIT	FUNCTION
1	A141 16DG/BK	FUEL PUMP RELAY OUTPUT
2	-	-
3	K226 20LB/YL	FUEL LEVEL SENSOR SIGNAL
4	K4 20BK/LB	SENSOR GROUND
5	-	-
6	Z1 16BK	GROUND

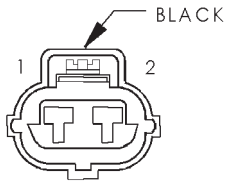

GENERATOR

GENERATOR - BLACK 2 WAY

CAV	CIRCUIT	FUNCTION
1	K21 18LB/RD	GENERATOR SOURCE
2	K20 18DG	GENERATOR FIELD DRIVER

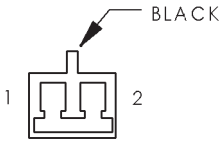

GLOVE BOX LAMP

GLOVE BOX LAMP - BLACK 2 WAY

CAV	CIRCUIT	FUNCTION
1	F70 20PK/BK	FUSED B(+)
2	M20 20BR/OR	COURTESY LAMP LOAD SHED

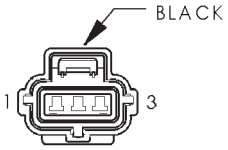

G-SWITCH

G-SWITCH - BLACK 3 WAY

CAV	CIRCUIT	FUNCTION
1	B41 18YL/PK	G SWITCH NO. 1 SENSE
2	B43 18PK/OR	G SWITCH TEST SIGNAL
3	B42 18TN/WT	G SWITCH NO. 2 SENSE

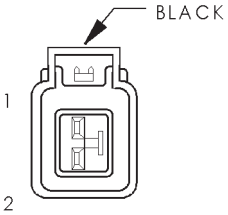

HORN NO. 1

HORN NO. 1 - BLACK 2 WAY

CAV	CIRCUIT	FUNCTION
1	Z1 18BK	GROUND
2	X2 18DG/RD	HORN RELAY OUTPUT

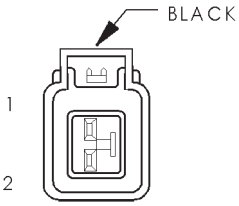

HORN NO. 2

HORN NO. 2 - BLACK 2 WAY

CAV	CIRCUIT	FUNCTION
1	Z1 18BK	GROUND
2	X2 18DG/RD	HORN RELAY OUTPUT

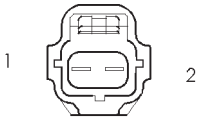

HYDRAULIC COOLING MODULE

HYDRAULIC COOLING MODULE - BLACK 2 WAY

CAV	CIRCUIT	FUNCTION
1	F142 18OR/DG	FUSED AUTOMATIC SHUT DOWN RELAY OUTPUT
2	C240 18DB/RD	ENGINE COOLANT TEMPERATURE

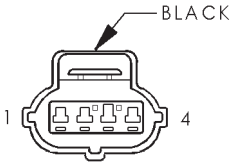

IDLE AIR CONTROL MOTOR

IDLE AIR CONTROL MOTOR - BLACK 4 WAY

CAV	CIRCUIT	FUNCTION
1	K59 18VT/BK	IDLE AIR CONTROL NO. 4 DRIVER
2	K40 18BR/WT	IDLE AIR CONTROL NO. 3 DRIVER
3	K60 18YL/BK	IDLE AIR CONTROL NO. 2 DRIVER
4	K39 18GY/RD (4.0L)	IDLE AIR CONTROL NO. 1 DRIVER
4	K39 18GY/BK (4.7L)	IDLE AIR CONTROL NO. 1 DRIVER

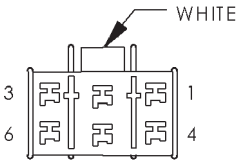

IGNITION SWITCH - C1

IGNITION SWITCH C1 - WHITE 6 WAY

CAV	CIRCUIT	FUNCTION
1	A41 12YL	IGNITION SWITCH OUTPUT (START)
2	A2 12PK/BK	FUSED B(+)
3	A22 12BK/OR	IGNITION SWITCH OUTPUT (RUN)
4	A1 12RD	FUSED B(+)
5	A31 12RD/BK	IGNITION SWITCH OUTPUT (RUN-ACC)
6	A21 12DB	IGNITION SWITCH OUTPUT (RUN-START)

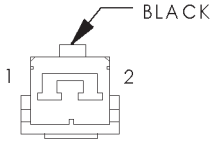

IGNITION SWITCH - C2

IGNITION SWITCH C2 - BLACK 2 WAY

CAV	CIRCUIT	FUNCTION
1	G26 20LB	KEY-IN IGNITION SWITCH SENSE
2	Z1 20BK	GROUND

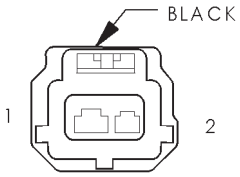

INPUT SPEED SENSOR (4.7L)

INPUT SPEED SENSOR (4.7L) - BLACK 2 WAY

CAV	CIRCUIT	FUNCTION
1	T52 18RD/BK	INPUT SPEED SENSOR SIGNAL
2	T13 18DB/BK	SPEED SENSOR GROUND

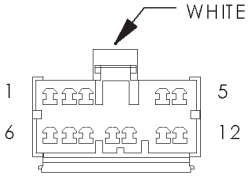

INSTRUMENT CLUSTER

INSTRUMENT CLUSTER - WHITE 12 WAY

CAV	CIRCUIT	FUNCTION
1	L61 20LG	LEFT TURN SIGNAL
2	L60 20TN	RIGHT TURN SIGNAL
3	-	-
4	G7 20WT/OR	VEHICLE SPEED SIGNAL
5	G9 20GY/BK	RED BRAKE WARNING INDICATOR DRIVER
6	F33 20PK/RD	FUSED B(+)
7	G5 20DB/WT	FUSED IGNITION SWITCH OUTPUT (RUN-START)
8	-	-
9	Z1 20BK	GROUND
10	D25 20YL/VT/RD	PCI BUS
11	Z2 20BK/OR	GROUND
12	T107 20BK/RD	PART TIME 4 WHEEL DRIVER INDICATOR DRIVER

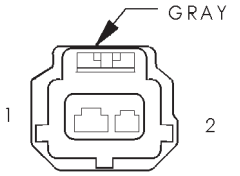

INTAKE AIR TEMPERATURE SENSOR

INTAKE AIR TEMPERATURE SENSOR - GRAY 2 WAY

CAV	CIRCUIT	FUNCTION
1	K4 18BK/LB	SENSOR GROUND
2	K21 18BK/RD	INTAKE AIR TEMPERATURE SENSOR SIGNAL

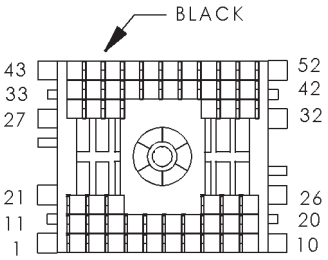

JUNCTION BLOCK - C1

JUNCTION BLOCK C1 - BLACK 52 WAY

CAV	CIRCUIT	FUNCTION
1	Q30 16TN	SUNROOF DELAY RELAY OUTPUT
2	L63 18DG/RD	LEFT TURN SIGNAL
3	-	-
4	-	-
5	L95 18DG/YL	REAR FOG LAMP RELAY OUTPUT
6	-	-
7	-	-
8	-	-
9	G73 20LG/OR	LIFTGATE COURTESY DISABLE
10	G77 20TN/OR	DOOR AJAR SWITCH SENSE
11	L7 18BK/YL	PARK LAMP RELAY OUTPUT
12	-	-
13	-	-
14	-	-
15	F35 16RD (POWER SEAT)	FUSED B(+)
16	M2 20YL/DG	COURTESY LAMP DRIVER
16	M2 18YL	COURTESY LAMPS DRIVER
17	-	-
18	-	-
19	G10 20LG/RD	SEAT BELT SWITCH SENSE
20	-	-
21	-	-
22	-	-
23	-	-
24	G80 20VT/YL	LIFTGATE FLIP-UP AJAR SWITCH SENSE
25	G78 20TN/BK	LIFTGATE AJAR SWITCH SENSE
26	M20 20YL/BK	COURTESY LAMP LOAD SHED
27	-	
28	-	-
29	-	-
30	-	-
31	-	-
32	-	-
33	-	-
34	-	-
35	L50 14WT/TN	FUSED IGNITION SWITCH OUTPUT
36	-	-
37	-	-
38	-	-
39	-	-
40	-	-
41	F30 14RD/YL	CIGAR LIGHTER RELAY OUTPUT
42	-	-
43	-	-
44	-	-
45	-	-
46	-	-
47	F70 18PK	FUSED B(+)
48	G5 20DB/WT	FUSED IGNITION SWITCH OUTPUT (RUN-START)
49	-	-
50	C15 12BK/WT	REAR WINDOW DEFOGGER RELAY OUTPUT
51	-	-
52	-	-

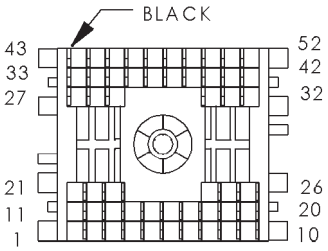

JUNCTION BLOCK - C2

JUNCTION BLOCK C2 - BLACK 52 WAY

CAV	CIRCUIT	FUNCTION
1	X4 22GY/OR	HORN RELAY CONTROL
2	G7 20WT/OR	VEHICLE SPEED SENSOR SIGNAL
3	L39 20LB	FOG LAMP RELAY OUTPUT
4	-	-
5	L61 20TN/LG	LEFT TURN SIGNAL
6	-	-
7	-	-
8	V6 16DB	FUSED IGNITION SWITCH OUTPUT (RUN-ACC)
9	V6 16DB	FUSED IGNITION SWITCH OUTPUT (RUN-ACC)
10	L62 18BR/RD	RIGHT TURN SIGNAL
11	F991 20OR/DB	FUSED IGNITION SWITCH OUTPUT (RUN-START)
12	L39 20LB	FOG LAMP RELAY OUTPUT
13	-	-
14	-	-
15	-	-
16	-	-
17	-	-
18	-	-
19	-	-
20	L7 20BK/YL	PARK LAMP RELAY OUTPUT
21	L7 20BK/YL	PARK LAMP RELAY OUTPUT
22	-	-
23	-	-
24	F37 16RD/LB (POWER SEATS)	FUSED B(+)
25	F22 20WT/PK	FUSED IGNITION SWITCH OUTPUT (RUN)
26	L60 20TN	RIGHT TURN SIGNAL
27	F45 20YL/RD	FUSED IGNITION SWITCH OUTPUT (START)
28	V55 16TN/RD	WIPER PARK SWITCH SENSE
29	-	-
30	-	-
31	A148 16VT (POWER SEATS)	FUSED B(+)
32	M1 20PK/RD	FUSED B(+)
33	V55 16TN/RD	WIPER PARK SWITCH SENSE
34	-	-
35	-	-
36	F21 12TN/BK	FUSED B(+)
37	-	-
38	L34 18RD/OR	FUSED RIGHT HIGH BEAM OUTPUT
39	L43 18VT	FUSED LEFT LOW BEAM OUTPUT
40	-	-
41	-	-
42	F20 18DB/PK	FUSED IGNITION SWITCH OUTPUT (RUN)
43	F99 20OR	FUSED IGNITION SWITCH OUTPUT (RUN-START)
44	-	-
45	F21 12TN/LB	FUSED B(+)
46	-	-
47	F32 20PK/DB	FUSED B(+)
48	-	-
49	L44 18VT/RD	FUSED RIGHT LOW BEAM OUTPUT
50	L33 18RD	FUSED LEFT HIGH BEAM OUTPUT
51	-	-
52	F60 14RD/WT (POWER SEATS)	FUSED B(+)

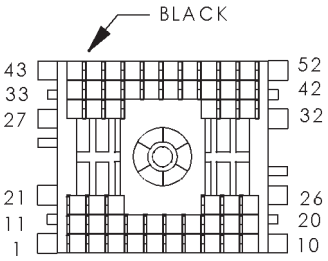

JUNCTION BLOCK - C3

JUNCTION BLOCK C3 - BLACK 52 WAY

CAV	CIRCUIT	FUNCTION
1	F22 20WT/PK	FUSED IGNITION SWITCH OUTPUT (RUN)
2	-	-
3	L60 20TN	RIGHT TURN SIGNAL
4	L302 20LB/YL	RIGHT TURN SWITCH SENSE
5	L61 20LG	LEFT TURN SIGNAL
6	L91 20DB/PK	HAZARD SWITCH SENSE
7	-	-
8	L305 20LB/WT	LEFT TURN SWITCH SENSE
9	-	-
10	L11 22PK/LG	HIGH BEAM RELAY CONTROL
11	F23 18DB/YL	FUSED IGNITION SWITCH OUTPUT (RUN)
12	F22 20WT/PK	FUSED IGNITION SWITCH OUTPUT (RUN)
13	-	-
14	A148 16VT	FUSED B(+)
15	C15 20BK/WT	FUSED REAR WINDOW DEFOGGER RELAY OUTPUT
16	-	-
17	-	-
18	-	-
19	-	-
20	G7 20WT/OR	VEHICLE SPEED SENSOR SIGNAL
21	-	-
22	-	-
23	-	-
24	A31 12RD/BK	IGNITION SWITCH OUTPUT (RUN-ACC)
25	F60 16RD/WT	FUSED B(+)
26	-	-
27	A41 12YL	IGNITION SWITCH OUTPUT (START)
28	F14 18LG/YL	FUSED IGNITION SWITCH OUTPUT (RUN-START)
29	A22 12BK/OR	IGNITION SWITCH OUTPUT (RUN)
30	-	-
31	Z1 20BK	GROUND
32	F33 20PK/RD	FUSED B(+)
33	X12 16WT/RD	FUSED IGNITION SWITCH OUTPUT (RUN-ACC)
34	M1 20PK	FUSED B(+)
35	M1 20PK (AZC)	FUSED B(+)
36	A21 12DB	IGNITION SWITCH OUTPUT (RUN-START)
37	-	-
38	F70 20PK/BK	FUSED B(+)
39	X4 22GY/OR	HORN RELAY CONTROL
40	F30 18RD	FUSED CIGAR LIGHTER RELAY OUTPUT
41	F33 20PK/RD	FUSED B(+)
42	-	-
43	V23 20BR/PK	FUSED IGNITION SWITCH OUTPUT (RUN-ACC)
44	M1 20PK	FUSED B(+)
45	X2 20BK/OR	GROUND
46	-	-
47	-	-
48	F70 20PK/BK	FUSED B(+)
49	-	-
50	G5 20DB/WT	FUSED IGNITION SWITCH OUTPUT (RUN-START)
51	G5 20DB/WT	FUSED IGNITION SWITCH OUTPUT (RUN-START)
52	F99 20OR	FUSED IGNITION SWITCH OUTPUT (RUN-START)

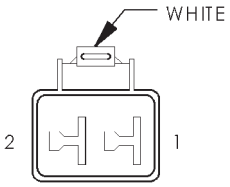

JUNCTION BLOCK - C4

JUNCTION BLOCK C4 - WHITE 2 WAY

CAV	CIRCUIT	FUNCTION
1	A148 10PK/WT	FUSED B(+)
2	A148 10OR/WT	FUSED B(+)

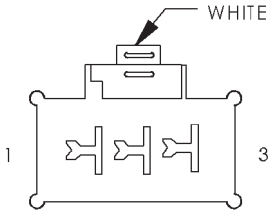

JUNCTION BLOCK - C5

JUNCTION BLOCK C5 - WHITE 3 WAY

CAV	CIRCUIT	FUNCTION
1	A145 10WT/RD	FUSED B(+)
2	A149 12RD/TN	FUSED B(+)
3	A147 10RD/GY	FUSED B(+)

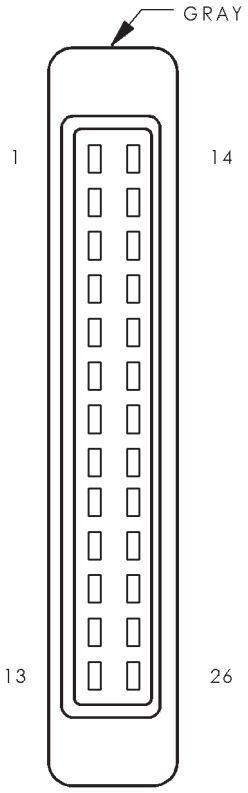

JUNCTION BLOCK BODY CONTROL MODULE

JUNCTION BLOCK BODY CONTROL MODULE GRAY 26 WAY

CAV	CIRCUIT	FUNCTION
1	L308	PARK LAMP RELAY CONTROL
2	L26	FOG LAMP RELAY CONTROL
3	Q29	SUNROOF DELAY RELAY CONTROL
4	L307	LOW BEAM RELAY CONTROL
5	G5	FUSED IGNITION SWITCH OUTPUT (RUN-START)
6	X4	HORN RELAY CONTROL
7	-	-
8	G80	LIFTGATE FLIP-UP AJAR SWITCH SENSE
9	L11	HIGH BEAM RELAY CONTROL
10	L91	HAZARD SWITCH SENSE
11	C80	REAR WINDOW DEFOGGER RELAY CONTROL
12	Z2	GROUND
13	-	-
14	L7	PARK LAMP RELAY CONTROL
15	Z1	GROUND
16	M2	COURTESY LAMP DRIVER
17	-	-
18	-	-
19	M20	COURTESY LAMP LOAD SHEED
20	V55	WIPER PARK SWITCH SENSE
21	G78	LIFTGATE AJAR SWITCH SENSE
22	G10	SEAT BELT SWITCH SENSE
23	G77	LEFT REAR DOOR AJAR SWITCH SENSE
24	G73	LIFTGATE COURTESY DISABLE
25	V23	FUSED IGNITION SWITCH OUTPUT (RUN-ACC)
26	M1	FUSED B(+)

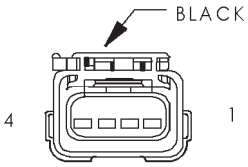

KNOCK SENSOR

KNOCK SENSOR - BLACK 4 WAY

CAV	CIRCUIT	FUNCTION
1	K402 18BK/DG	SENSOR GROUND
2	K142 18GY/BK	KNOCK SENSOR NO. 2 SIGNAL
3	K403 18BK/DB	SENSOR GROUND
4	K42 18DB/LG	KNOCK SENSOR SIGNAL

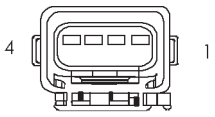

LEAK DETECTION PUMP

LEAK DETECTION PUMP - 4 WAY

CAV	CIRCUIT	FUNCTION
1	-	-
2	F142 18OR/DG	GENERATOR SOURCE
3	K106 20WT/DG	LEAK DETECTION PUMP SOLENOID CONTROL
4	K107 20OR/PK	LEAK DETECTION PUMP SWITCH SENSE

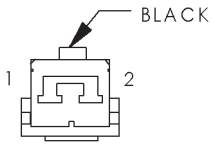

LEFT COURTESY LAMP

LEFT COURTESY LAMP - BLACK 2 WAY

CAV	CIRCUIT	FUNCTION
1	F70 20PK/BK	FUSED B(+)
2	M2 20YL	COURTESY LAMP DRIVER

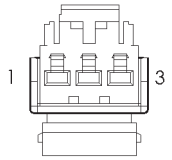

LEFT DOOR HANDLE COURTESY LAMP

LEFT DOOR HANDLE COURTESY LAMP - 3 WAY

CAV	CIRCUIT	FUNCTION
1	F70 20PK/BK	FUSED B(+)
2	M20 20YL/BK	COURTESY LAMP LOAD SHEED
3	M2 20YL/DG	COURTESY LAMP DRIVER

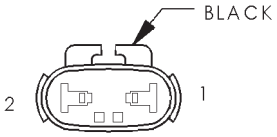

LEFT FOG LAMP

LEFT FOG LAMP - BLACK 2 WAY

CAV	CIRCUIT	FUNCTION
A	L39 20LB	FOG LAMP RELAY OUTPUT
B	Z1 20BK	GROUND

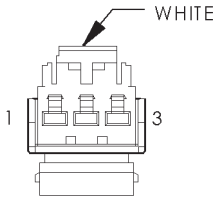

LEFT FRONT DOOR SPEAKER

LEFT FRONT DOOR SPEAKER - WHITE 3 WAY

CAV	CIRCUIT	FUNCTION
1	X85 18LG/DG	LEFT FRONT DOOR SPEAKER (-)
2	-	-
3	X87 18LG/RD	LEFT FRONT DOOR SPEAKER (+)

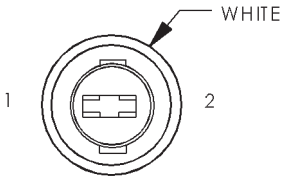

LEFT FRONT PARK LAMP

LEFT FRONT PARK LAMP - WHITE 2 WAY

CAV	CIRCUIT	FUNCTION
1	Z1 18BK	GROUND
2	L7 20BK/PK	PARK LAMP RELAY OUTPUT

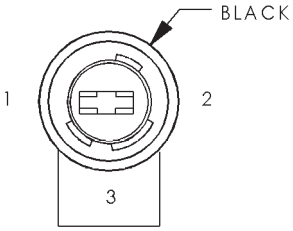

LEFT FRONT PARK/TURN SIGNAL LAMP

LEFT FRONT PARK/TURN SIGNAL LAMP - BLACK 3 WAY

CAV	CIRCUIT	FUNCTION
1	L7 20BK/PK	PARK LAMP RELAY CONTROL
2	Z1 18BK	GROUND
3	L61 20TN/LG	LEFT TURN SIGNAL

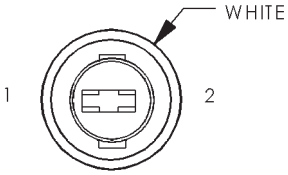

LEFT FRONT SIDE MARKER LAMP

LEFT FRONT SIDE MARKER LAMP - WHITE 2 WAY

CAV	CIRCUIT	FUNCTION
1	L7 20BK/PK	PARK LAMP RELAY OUTPUT
2	L61 20TN/LG	LEFT TURN SIGNAL

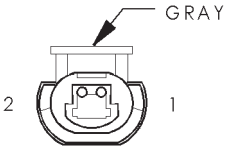

LEFT FRONT WHEEL SPEED SENSOR

LEFT FRONT WHEEL SPEED SENSOR - GRAY 2 WAY

CAV	CIRCUIT	FUNCTION
1	B8 18RD/DB	LEFT FRONT WHEEL SPEED SENSOR 12 VOLT SUPPLY
2	B9 18RD	LEFT FRONT WHEEL SPEED SENSOR SIGNAL

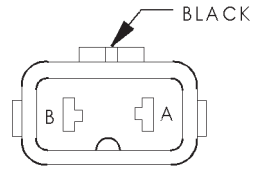

LEFT HIGH BEAM HEADLAMP

LEFT HIGH BEAM HEADLAMP - BLACK 2 WAY

CAV	CIRCUIT	FUNCTION
A	Z1 18BK	GROUND
B	L33 18RD	FUSED LEFT HIGH BEAM OUTPUT

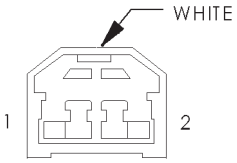

LEFT INSTRUMENT PANEL SPEAKER

LEFT INSTRUMENT PANEL SPEAKER - WHITE 2 WAY

CAV	CIRCUIT	FUNCTION
1	X83 18YL/RD	LEFT INSTRUMENT PANEL SPEAKER (+)
2	X81 18YL/BK	LEFT INSTRUMENT PANEL SPEAKER (-)

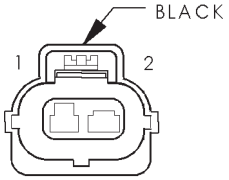

LEFT LIFTGATE AJAR SWITCH

LEFT LIFTGATE AJAR SWITCH - BLACK 2 WAY

CAV	CIRCUIT	FUNCTION
1	Z1 20BK	GROUND
2	G78 20TN/BK	LIFTGATE AJAR SWITCH SENSE

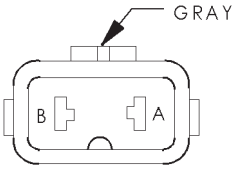

LEFT LOW BEAM HEADLAMP

LEFT LOW BEAM HEADLAMP - GRAY 2 WAY

CAV	CIRCUIT	FUNCTION
A	Z1 18BK	GROUND
B	L43 18VT	FUSED LEFT LOW BEAM OUTPUT

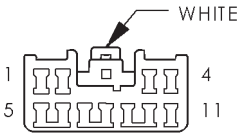

LEFT MULTI-FUNCTION SWITCH

LEFT MULTI-FUNCTION SWITCH - WHITE 11 WAY

CAV	CIRCUIT	FUNCTION
1	L27 22WT/TN	FOG LAMP SWITCH SENSE
2	Z1 20BK	GROUND
3	-	-
4	L80 20WT/DG	HEADLAMP SWITCH RETURN
5	L11 22PK/LG	HIGH BEAM RELAY CONTROL
6	L40 22BR	HIGH BEAM SWITCH SENSE
7	L302 20LB/YL	RIGHT TURN SWITCH SENSE
8	L305 20LB/WT	LEFT TURN SWITCH SENSE
9	L91 20DB/PK	HAZARD SWITCH SENSE
10	E19 20RD	PANEL LAMPS DIMMER SIGNAL
11	G52 20YL	HEADLAMP SWITCH MUX

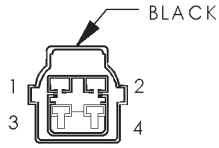

LEFT REAR DOOR POWER LOCK MOTOR/ AJAR SWITCH

LEFT REAR DOOR POWER LOCK MOTOR/AJAR SWITCH - BLACK 4 WAY

CAV	CIRCUIT	FUNCTION
1	G77 18TN/YL	LEFT REAR DOOR AJAR SWITCH SENSE
2	Z1 18BK	GROUND
3	P36 18PK/VT	DOOR UNLOCK DRIVER
4	P35 18OR/VT	DOOR LOCK DRIVER

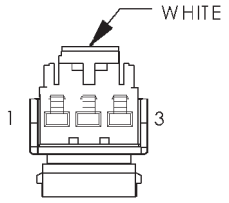

LEFT REAR DOOR SPEAKER

LEFT REAR DOOR SPEAKER - WHITE 3 WAY

CAV	CIRCUIT	FUNCTION
1	X90 18WT/VT	LEFT REAR DOOR SPEAKER (+)
2	-	-
3	X92 18TN/DG	LEFT REAR DOOR SPEAKER (-)

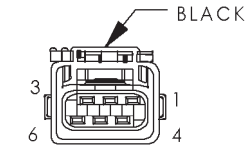

LEFT REAR LAMP ASSEMBLY

LEFT REAR LAMP ASSEMBLY - BLACK 6 WAY

CAV	CIRCUIT	FUNCTION
1	L1 18VT/BK	BACK-UP LAMP FEED
2	-	-
3	L7 18BK/YL	PARK LAMP RELAY OUTPUT
4	L63 18DG/RD	LEFT TURN SIGNAL
5	Z1 18BK	GROUND
6	L50 18WT/TN	BRAKE LAMP SWITCH OUTPUT

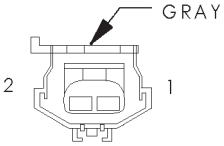

LEFT REAR WHEEL SPEED SENSOR

LEFT REAR WHEEL SPEED SENSOR - GRAY 2 WAY

CAV	CIRCUIT	FUNCTION
1	B3 18LG/DB	LEFT REAR WHEEL SPEED SENSOR 12 VOLT SUPPLY
2	B4 18LG	LEFT REAR WHEEL SPEED SENSOR SIGNAL

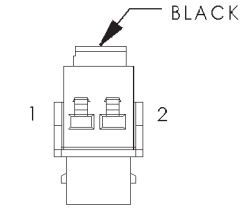

LEFT REMOTE RADIO SWITCH

LEFT REMOTE RADIO SWITCH - BLACK 2 WAY

CAV	CIRCUIT	FUNCTION
1	X10 20RD/BK	RADIO CONTROL MUX RETURN
2	X20 20RD/YL	RADIO CONTROL MUX

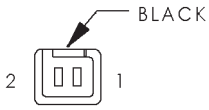

LEFT VISOR/ VANITY LAMP

LEFT VISOR/VANITY LAMP - BLACK 2 WAY

CAV	CIRCUIT	FUNCTION
1	F70 20PK	FUSED B(+)
2	M20 20YL/BK	COURTESY LAMP LOAD SHED

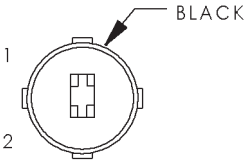

LICENSE LAMP NO. 1

LICENSE LAMP NO. 1 - BLACK 2 WAY

CAV	CIRCUIT	FUNCTION
1	L7 18BK/YL	PARK LAMP RELAY OUTPUT
2	Z1 18BK	GROUND

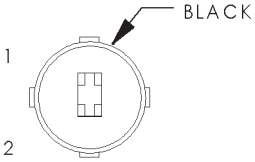

LICENSE LAMP NO. 2

LICENSE LAMP NO. 2 - BLACK 2 WAY

CAV	CIRCUIT	FUNCTION
1	L7 18BK/YL	PARK LAMP RELAY OUTPUT
2	Z1 18BK	GROUND

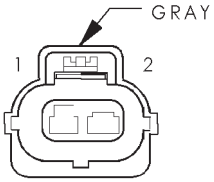

LIFTGATE FLIP-UP AJAR SWITCH

LIFTGATE FLIP-UP AJAR SWITCH - GRAY 2 WAY

CAV	CIRCUIT	FUNCTION
1	Z1 20BK	GROUND
2	G80 20VT/YL	LIFTGATE FLIP-UP AJAR SWITCH SENSE

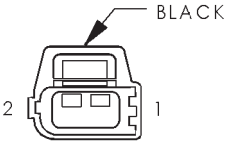

LIFTGATE FLIP-UP PUSH BUTTON SWITCH

LIFTGATE FLIP-UP PUSH BUTTON SWITCH - BLACK 2 WAY

CAV	CIRCUIT	FUNCTION
1	P101 18OR/PK	LIFTGATE FLIP-UP SWITCH OUTPUT
2	F70 18PK	FUSED B(+)

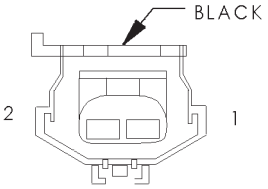

LIFTGATE FLIP-UP RELEASE SOLENOID

LIFTGATE FLIP-UP RELEASE SOLENOID - BLACK 2 WAY

CAV	CIRCUIT	FUNCTION
1	Z1 18BK	GROUND
2	P100 18OR/BR	LIFTGATE GLASS LIMIT SWITCH OUTPUT

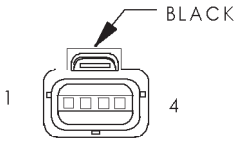

LIFTGATE POWER LOCK MOTOR

LIFTGATE POWER LOCK MOTOR - BLACK 4 WAY

CAV	CIRCUIT	FUNCTION
1	P35 18OR/VT	DOOR LOCK DRIVER
2	P36 18PK/VT	DOOR UNLOCK DRIVER
3	P101 18OR/PK	LIFTGATE FLIP-UP SWITCH OUTPUT
4	P100 18OR/BR	LIFTGATE GLASS LIMIT SWITCH OUTPUT

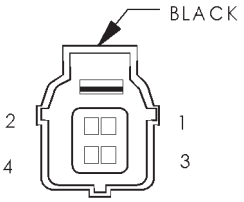

LINE PRESSURE SENSOR (4.7L)

LINE PRESSURE SENSOR (4.7L) - BLACK 4 WAY

CAV	CIRCUIT	FUNCTION
1	Z13 14BK/RD	GROUND
2	T138 14GY/LB	5V SUPPLY
3	T130 14VT/TN	LINE PRESSURE SENSOR SIGNAL
4	-	-

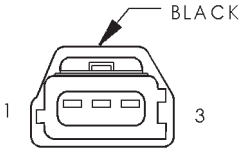

MANIFOLD ABSOLUTE PRESSURE SENSOR (4.0L)

MANIFOLD ABSOLUTE PRESSURE SENSOR (4.0L) - BLACK 3 WAY

CAV	CIRCUIT	FUNCTION
1	K4 18BK/LB	SENSOR GROUND
2	K1 18DG/RD	MAP SENSOR SIGNAL
3	K7 20OR	5V SUPPLY

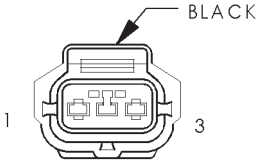

MANIFOLD ABSOLUTE PRESSURE SENSOR (4.7L)

MANIFOLD ABSOLUTE PRESSURE SENSOR (4.7L) - BLACK 3 WAY

CAV	CIRCUIT	FUNCTION
1	K7 20OR	5V SUPPLY
2	K4 18BK/LB	SENSOR GROUND
3	K1 18DG/RD	MAP SENSOR SIGNAL

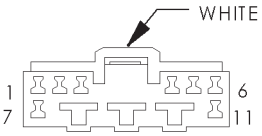

MANUAL TEMPERATURE CONTROL - C1 (MTC)

MANUAL TEMPERATURE CONTROL C1 (MTC) - WHITE 11 WAY

CAV	CIRCUIT	FUNCTION
1	C103 20DG	A/C SWITCH SIGNAL
2	Z2 20BK/OR	GROUND
3	C67 20RD/LB	BLEND AIR DOOR POSITION CONTROL
4	C15 20BK/WT	FUSED REAR WINDOW DEFOGGER RELAY OUTPUT
5	C15 20BK/WT	REAR WINDOW DEFOGGER SWITCH SENSE
6	F22 20WT/PK	FUSED IGNITION SWITCH OUTPUT (RUN)
7	E2 20OR	PANEL LAMPS DRIVER
8	C4 16TN	BLOWER MOTOR LOW DRIVER
9	C5 16LG	BLOWER MOTOR M1 DRIVER
10	C6 14LB	BLOWER MOTOR M2 DRIVER
11	-	-

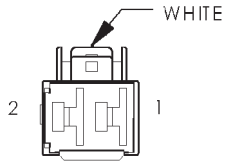

MANUAL TEMPERATURE CONTROL - C2 (MTC)

MANUAL TEMPERATURE CONTROL C2 (MTC) - WHITE 2 WAY

CAV	CIRCUIT	FUNCTION
1	Z1 12BK	GROUND
2	C7 12BK/TN	BLOWER MOTOR HIGH DRIVER

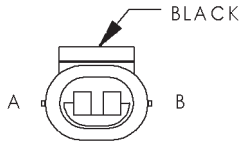

MODE DOOR MOTOR/ ACTUATOR (AZC)

MODE DOOR MOTOR/ACTUATOR (AZC) - BLACK 2 WAY

CAV	CIRCUIT	FUNCTION
A	C102 20YL	MODE DOOR DRIVER (B)
B	C35 20TN/BK	MODE DOOR DRIVER (A)

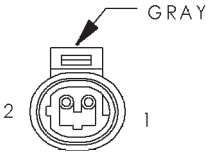

OUTPUT SPEED SENSOR (4.0L)

OUTPUT SPEED SENSOR (4.0L) - GRAY 2 WAY

CAV	CIRCUIT	FUNCTION
1	T13 18DB/BK	SPEED SENSOR GROUND
2	T14 18LG/WT	OUTPUT SPEED SENSOR SIGNAL

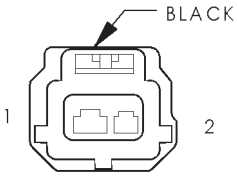

OUTPUT SPEED SENSOR (4.7L)

OUTPUT SPEED SENSOR (4.7L) - BLACK 2 WAY

CAV	CIRCUIT	FUNCTION
1	T14 18LG/WT	OUTPUT SPEED SENSOR SIGNAL
2	T13 18DB/BK	SPEED SENSOR GROUND

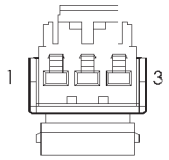

OVERHEAD MAP/ COURTESY LAMP

OVERHEAD MAP/COURTESY LAMP - 3 WAY

CAV	CIRCUIT	FUNCTION
1	F70 20PK	FUSED B(+)
2	M20 20YL/BK	COURTESY LAMP LOAD SHEED
3	M2 20YL/DG	COURTESY LAMP DRIVER

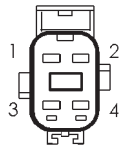

OXYGEN SENSOR 1/1 UPSTREAM

OXYGEN SENSOR 1/1 UPSTREAM - GRAY 4 WAY

CAV	CIRCUIT	FUNCTION
1	F142 18OR/DG	FUSED AUTOMATIC SHUT DOWN RELAY OUTPUT
2	K99 18GY/WT	OXYGEN SENSOR 1/1 HEATER CONTROL
3	K4 18BK/LB	SENSOR GROUND
4	K241 18LG/RD	OXYGEN SENSOR 1/1 SIGNAL

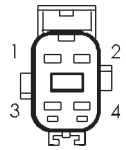

OXYGEN SENSOR 1/2 DOWNSTREAM

OXYGEN SENSOR 1/2 DOWNSTREAM - BLACK 4 WAY

CAV	CIRCUIT	FUNCTION
1	K200 18VT/OR	OXYGEN SENSOR DOWNSTREAM RELAY OUTPUT
2	Z1 18BK	GROUND
3	K4 18BK/LB	SENSOR GROUND
4	K41 18BK/DG	OXYGEN SENSOR 1/2 SIGNAL

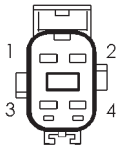

OXYGEN SENSOR 2/1 UPSTREAM

OXYGEN SENSOR 2/1 UPSTREAM - GRAY 4 WAY

CAV	CIRCUIT	FUNCTION
1	F142 18OR/DG	FUSED AUTOMATIC SHUT DOWN RELAY OUTPUT
2	K199 18DB/WT	OXYGEN SENSOR 2/1 HEATER CONTROL
3	K4 18BK/LB	SENSOR GROUND
4	K141 18TN/WT	OXYGEN SENSOR 2/1 SIGNAL

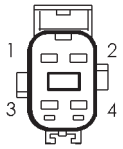

OXYGEN SENSOR 2/2 DOWNSTREAM

OXYGEN SENSOR 2/2 DOWNSTREAM - BLACK 4 WAY

CAV	CIRCUIT	FUNCTION
1	K200 18VT/OR	OXYGEN SENSOR DOWNSTREAM RELAY OUTPUT
2	Z1 18BK	GROUND
3	K4 18BK/LB	SENSOR GROUND
4	K341 18PK/WT	OXYGEN SENSOR 2/2 SIGNAL

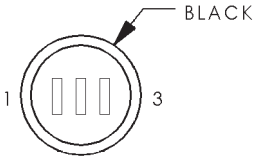

PARK/NEUTRAL POSITION SWITCH (4.0L)

PARK/NEUTRAL POSITION SWITCH (4.0L) - BLACK 3 WAY

CAV	CIRCUIT	FUNCTION
1	L1 18VT/BK	BACK-UP LAMP FEED
2	T41 18BR/YL	PARK/NEUTRAL POSITION SWITCH SENSE
3	F22 18WT/TN	FUSED IGNITION SWITCH OUTPUT (RUN)

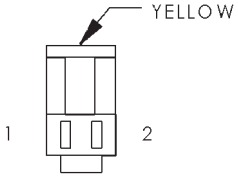

PASSENGER AIRBAG

PASSENGER AIRBAG - YELLOW 2 WAY

CAV	CIRCUIT	FUNCTION
1	R44 18DG/YL	PASSENGER AIRBAG LINE 2
2	R42 18BK/YL	PASSENGER AIRBAG LINE 1

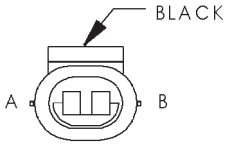

PASSENGER BLEND DOOR MOTOR/ ACTUATOR (AZC)

PASSENGER BLEND DOOR MOTOR/ACTUATOR (AZC) - BLACK 2 WAY

CAV	CIRCUIT	FUNCTION
A	C96 20DB/WT	PASSENGER BLEND DOOR DRIVER (B)
B	C94 20DB/RD	PASSENGER BLEND DOOR DRIVER (A)

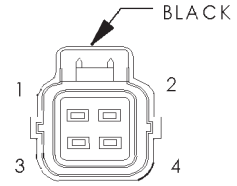

PASSENGER DOOR POWER LOCK MOTOR/ AJAR SWITCH

PASSENGER DOOR LOCK MOTOR/AJAR SWITCH - BLACK 4 WAY

CAV	CIRCUIT	FUNCTION
1	G74 18TN/RD	PASSENGER DOOR AJAR SWITCH SENSE
2	Z1 18BK	GROUND
3	P36 18PK/VT	DOOR UNLOCK DRIVER
4	P35 18OR/VT	DOOR LOCK DRIVER

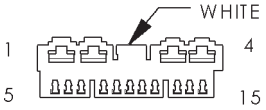

PASSENGER DOOR MODULE - C1

PASSENGER DOOR MODULE C1 - WHITE 15 WAY

CAV	CIRCUIT	FUNCTION
1	F21 12TN/BK	FUSED B(+)
2	Q24 16DG	PASSENGER REAR WINDOW DRIVER (DOWN)
3	Q14 16GY	PASSENGER REAR WINDOW DRIVER (UP)
4	Z1 12BK	GROUND
5	P35 18OR/VT	DOOR LOCK DRIVER
6	-	-
7	P36 18PK/VT	DOOR UNLOCK DRIVER
8	-	-
9	D25 20YL/VT	PCI BUS
10	-	-
11	G74 18TN/RD	PASSENGER DOOR AJAR SWITCH SENSE
12	E20 20OR/DB	PASSENGER REAR DOOR SWITCH ILLUMINATION
13	Q12 16BR	PASSENGER WINDOW DRIVER (UP)
14	-	-
15	Q22 16VT	PASSENGER WINDOW DRIVER (DOWN)

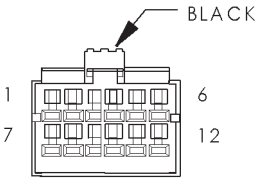

PASSENGER DOOR MODULE-C2

PASSENGER DOOR MODULE C2 - BLACK 12 WAY

CAV	CIRCUIT	FUNCTION
1	P95 20OR	MIRROR HORIZONTAL DRIVER
2	C118 20BK/WT	MIRROR HEATED GROUND
3	P64 20VT	MIRROR VERTICAL POSITION SIGNAL
4	P69 20GY	MIRROR SENSOR GROUND
5	P65 20DG	MIRROR HORIZONTAL POSITION SIGNAL
6	C117 20BK	MIRROR HEATER 12 VOLT SUPPLY
7	P91 20WT	MIRROR COMMON DRIVER
8	P93 20RD	MIRROR VERTICAL DRIVER
9	M21 20PK/DG	COURTESY LAMP DRIVER
10	-	-
11	-	-
12	L121 20BK/RD	COURTESY LAMP GROUND

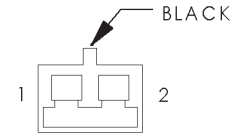

PASSENGER FRONT DOOR COURTESY LAMP

PASSENGER FRONT DOOR COURTESY LAMP - BLACK 2 WAY

CAV	CIRCUIT	FUNCTION
1	M21 20PK/DG	COURTESY LAMP DRIVER
2	L121 20BK/RD	COURTESY LAMP GROUND

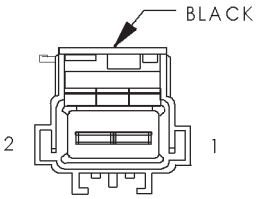

PASSENGER FRONT POWER WINDOW MOTOR

PASSENGER FRONT POWER WINDOW MOTOR - BLACK 2 WAY

CAV	CIRCUIT	FUNCTION
1	Q22 16VT	PASSENGER WINDOW DRIVER (DOWN)
2	Q12 16BR	PASSENGER WINDOW DRIVER (UP)

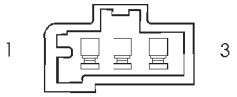

PASSENGER HEATED SEAT BACK (PREMIUM I/III)

PASSENGER HEATED SEAT BACK (PREMIUM I/III) - 3 WAY

CAV	CIRCUIT	FUNCTION
1	P88 16BK/BR	HEATED SEAT DRIVER
2	Z5 16BK/VT	GROUND
3	-	-

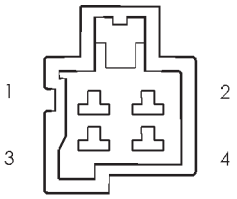

PASSENGER HEATED SEAT CUSHION (PREMIUM I/III)

PASSENGER HEATED SEAT CUSHION (PREMIUM I/III) - 4 WAY

CAV	CIRCUIT	FUNCTION
1	P130 16DG/WT	PASSENGER SEAT HEATER B(+) DRIVER
2	P88 16BK/BR	HEATED SEAT DRIVER
3	P86 20DG/YL	PASSENGER SEAT TEMPERATURE SENSOR INPUT
4	P29 20BR/WT	SEAT SENSOR 5V SUPPLY

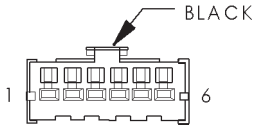

PASSENGER HEATED SEAT SWITCH

PASSENGER HEATED SEAT SWITCH - BLACK 6 WAY

CAV	CIRCUIT	FUNCTION
1	P134 20LG/WT	PASSENGER SEAT HEATER SWITCH MUX
2	E2 20OR	PANEL LAMPS DRIVER
3	F22 20WT/PK	FUSED IGNITION SWITCH OUTPUT (RUN)
4	-	-
5	Z1 20BK	GROUND
6	P132 20OR/BK	SEAT HEATER SWITCH SENSOR GROUND

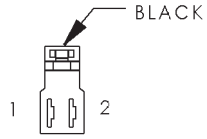

PASSENGER LUMBAR MOTOR (MIDLINE/PREMIUM)

PASSENGER LUMBAR MOTOR (MIDLINE/PREMIUM) - BLACK 2 WAY

CAV	CIRCUIT	FUNCTION
1	P105 16LG/DG	LUMBAR FORWARD SWITCH SENSE
2	P104 16YL/RD	LUMBAR REARWARD SWITCH SENSE

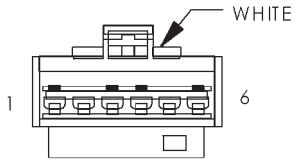

PASSENGER LUMBAR SWITCH (MIDLINE/PREMIUM)

PASSENGER LUMBAR SWITCH (MIDLINE/PREMIUM) - WHITE 6 WAY

CAV	CIRCUIT	FUNCTION
1	-	-
2	Z1 16BK	GROUND
3	P105 16LG/DB	LUMBAR FORWARD SWITCH SENSE
4	P104 16YL/RD	LUMBAR REARWARD SWITCH SENSE
5	Z1 16BK	GROUND
6	F37 16RD/LB	FUSED B(+)

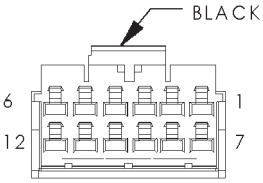

PASSENGER POWER MIRROR

PASSENGER POWER MIRROR - BLACK 12 WAY

CAV	CIRCUIT	FUNCTION
1	C117 20BK	MIRROR HEATER 12VOLT SUPPLY
2	P65 20DG	MIRROR HORIZONTAL POSITION SIGNAL
3	P69 2GY	MIRROR SENSOR GROUND
4	P64 20VT	MIRROR VERTICAL POSITION SIGNAL
5	C118 20BK/WT	MIRROR HEATER GROUND
6	P95 20OR	MIRROR HORIZONTAL DRIVER
7	-	-
8	-	-
9	-	-
10	-	-
11	P93 20RD	MIRROR VERTICAL DRIVER
12	P91 20WT	MIRROR COMMON DRIVER

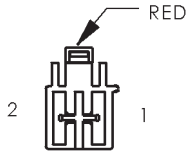

PASSENGER POWER SEAT FRONT RISER MOTOR

PASSENGER POWER SEAT FRONT RISER MOTOR - RED 2 WAY

CAV	CIRCUIT	FUNCTION
1	P18 16YL/LG	PASSENGER SEAT FRONT UP DRIVER
2	P20 16RD/LG	PASSENGER SEAT FRONT DOWN DRIVER

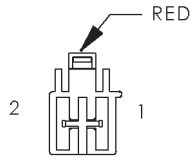

PASSENGER POWER SEAT HORIZONTAL MOTOR

PASSENGER POWER SEAT HORIZONTAL MOTOR - RED 2 WAY

CAV	CIRCUIT	FUNCTION
1	P16 16RD/YL	PASSENGER SEAT HORIZONTAL REARWARD DRIVER
2	P14 16YL/LB	PASSENGER SEAT HORIZONTAL FORWARD DRIVER

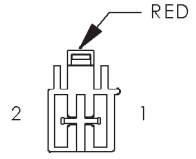

PASSENGER POWER SEAT REAR RISER MOTOR

PASSENGER POWER SEAT REAR RISER MOTOR - RED 2 WAY

CAV	CIRCUIT	FUNCTION
1	P10 16YL/WT	PASSENGER SEAT REAR UP DRIVER
2	P12 16RD/WT	PASSENGER SEAT REAR DOWN DRIVER

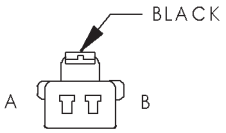

PASSENGER POWER SEAT RECLINER MOTOR (MIDLINE/PREMIUM)

PASSENGER POWER SEAT RECLINER MOTOR (MIDLINE/PREMIUM) - BLACK 2 WAY

CAV	CIRCUIT	FUNCTION
A	P42 16BR/WT	PASSENGER SEAT RECLINER DOWN DRIVER
B	P44 16GY/LB	PASSENGER SEAT RECLINER UP DRIVER

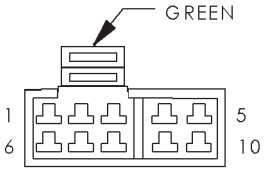

PASSENGER POWER SEAT SWITCH (MIDLINE/PREMIUM)

PASSENGER POWER SEAT SWITCH (MIDLINE/PREMIUM) - GREEN 10 WAY

CAV	CIRCUIT	FUNCTION
1	Z1 16BK	GROUND
2	P44 16GY/LB	PASSENGER SEAT RECLINER UP DRIVER
3	P16 16RD/YL	PASSENGER SEAT HORIZONTAL REARWARD DRIVER
4	P42 16BR/WT	PASSENGER SEAT RECLINER DOWN DRIVER
5	F37 16RD/LB	FUSED B(+)
6	P14 16YL/LB	PASSENGER SEAT HORIZONTAL FORWARD DRIVER
7	P20 16RD/LG	PASSENGER SEAT FRONT DOWN DRIVER
8	P12 16RD/WT	PASSENGER SEAT REAR DOWN DRIVER
9	P10 16YL/WT	PASSENGER SEAT REAR UP DRIVER
10	P18 16YL/LG	PASSENGER SEAT FRONT UP DRIVER

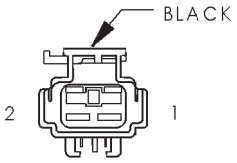

PASSENGER REAR POWER WINDOW MOTOR

PASSENGER REAR POWER WINDOW MOTOR - BLACK 2 WAY

CAV	CIRCUIT	FUNCTION
1	Q124 16DG/WT	WINDOW DRIVER DOWN
2	Q114 16GY/WT	WINDOW DRIVER UP

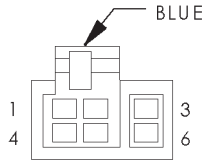

PASSENGER REAR POWER WINDOW SWITCH

PASSENGER REAR POWER WINDOW SWITCH - BLUE 6 WAY

CAV	CIRCUIT	FUNCTION
1	Q14 16GY	PASSENGER REAR WINDOW DRIVER UP
2	Q114 16GY/WT	WINDOW DRIVER UP
3	E21 20OR/RD	PASSENGER REAR DOOR SWITCH ILLUMINATION
4	Q24 16DG	PASSENGER REAR WINDOW DRIVER DOWN
5	Q124 16DG/WT	WINDOW DRIVER DOWN
6	Z1 16BK	GROUND

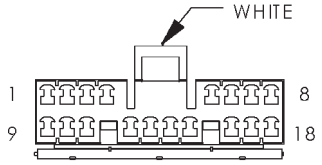

POWER AMPLIFIER - C1 (PREMIUM AUDIO)

POWER AMPLIFIER C1 (PREMIUM AUDIO) - WHITE 18 WAY

CAV	CIRCUIT	FUNCTION
1	-	-
2	F60 16RD/WT	FUSED B(+)
3	Z1 16BK	GROUND
4	-	-
5	X58 18DB/OR	RIGHT REAR SPEAKER (-)
6	X57 18DG/WT	LEFT REAR SPEAKER (-)
7	X56 18DB/PK	RIGHT FRONT SPEAKER (-)
8	X55 18BR/RD	LEFT FRONT SPEAKER (-)

POWER AMPLIFIER C1 (PREMIUM AUDIO) - WHITE 18 WAY

CAV	CIRCUIT	FUNCTION
9	-	-
10	F60 16RD/WT	FUSED B(+)
11	Z1 16BK	GROUND
12	-	-
13	X64 18BR/WT	ENABLE SIGNAL TO AMPLIFIER
14	-	-
15	X52 18DB/WT	RIGHT REAR SPEAKER (+)
16	X51 18WT/DG	LEFT REAR SPEAKER (+)
17	X54 18VT	RIGHT FRONT SPEAKER (+)
18	X53 18DG/OR	LEFT FRONT SPEAKER (+)

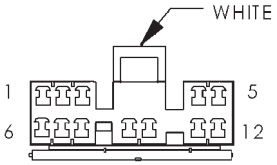

POWER AMPLIFIER - C2 (PREMIUM AUDIO)

POWER AMPLIFIER C2 (PREMIUM AUDIO) - WHITE 12 WAY

CAV	CIRCUIT	FUNCTION
1	X90 18WT/VT	RIGHT REAR DOOR SPEAKER (+)
2	X92 18TN/DG	RIGHT REAR DOOR SPEAKER (-)
3	X85 18LG/DG	LEFT FRONT DOOR SPEAKER (-)
4	X83 18YL/RD	LEFT INSTRUMENT PANEL SPEAKER (+)
5	X84 18OR/GY	RIGHT INSTRUMENTAL PANEL SPEAKER (-)
6	X93 18DG/WT	LEFT REAR DOOR SPEAKER (+)
7	X91 18WT/DG	LEFT REAR DOOR SPEAKER (-)
8	X87 18LG/RD	LEFT FRONT DOOR SPEAKER (+)
9	X80 18LB/BK	RIGHT FRONT DOOR SPEAKER (-)
10	X82 18LB/RD	RIGHT FRONT DOOR SPEAKER (+)
11	X81 18YL/BK	LEFT INSTRUMENT PANEL SPEAKER (-)
12	X86 18OR/RD	RIGHT INSTRUMENT PANEL SPEAKER (+)

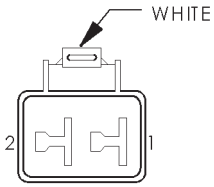

POWER CONNECTOR

POWER CONNECTOR - WHITE 2 WAY

CAV	CIRCUIT	FUNCTION
1	A148 16VT	FUSED B(+)
2	Z1 16BK	GROUND

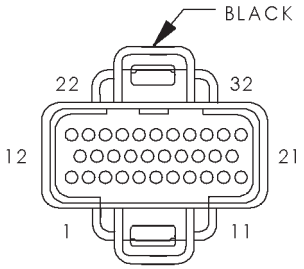

POWERTRAIN CONTROL MODULE - C1

POWERTRAIN CONTROL MODULE C1 - BLACK 32 WAY

CAV	CIRCUIT	FUNCTION
1	K93 14TN/OR (4.7L)	COIL DRIVER NO. 3
1	K93 16TN/OR (4.0L)	COIL DRIVER NO. 3
2	F991 18OR/DB	FUSED IGNITION SWITCH OUTPUT (RUN-START)
3	K94 14TN/LG (4.7L)	COIL DRIVER NO. 4
4	K4 18BK/LB	SENSOR GROUND
5	K96 14TN/LB (4.7L)	COIL DRIVER NO. 6
6	T41 18BR/YL	PARK/NEUTRAL POSITION SWITCH SENSE
7	K91 16TN/RD (4.0L)	COIL DRIVER NO. 1
7	K91 14TN/RD (4.7L)	COIL DRIVER NO. 1

POWERTRAIN CONTROL MODULE C1 - BLACK 32 WAY

CAV	CIRCUIT	FUNCTION
8	K24 18GY/BK	CRANKSHAFT POSITION SENSOR SIGNAL
9	K98 14LB/RD (4.7L)	COIL DRIVER NO. 8
10	K60 18YL/BK	IDLE AIR CONTROL NO. 2 DRIVER
11	K40 18BR/WT	IDLE AIR CONTROL NO. 3 DRIVER
12	-	-
13	-	-
14	-	-
15	K21 18BK/RD	INTAKE AIR TEMPERATURE SENSOR SIGNAL
16	K2 18TN/BK	ENGINE COOLANT TEMPERATURE SENSOR SIGNAL
17	K7 18OR	5V SUPPLY
18	K44 18TN/YL	CAMSHAFT POSITION SENSOR SIGNAL
19	K39 18GY/RD (4.0L)	IDLE AIR CONTROL NO. 1 DRIVER
19	K39 18GY/BK (4.7L)	IDLE AIR CONTROL NO. 1 DRIVER
20	K59 18VT/BK	IDLE AIR CONTROL NO. 4 DRIVER
21	K95 14TN/DG (4.7L)	COIL DRIVER NO. 5
22	A7 14RD/BK	FUSED B(+)
23	K22 18OR/RD	THROTTLE POSITION SENSOR SIGNAL
24	K241 18LG/RD	OXYGEN SENSOR 1/1 SIGNAL
25	K41 18BK/DG	OXYGEN SENSOR 1/2 SIGNAL
26	K141 18TN/WT	OXYGEN SENSOR 2/1 SIGNAL
27	K1 18DG/RD	MAP SENSOR SIGNAL
28	-	-
29	K341 18PK/WT (4.7L)	OXYGEN SENSOR 2/2 SIGNAL
30	-	-
31	Z11 14BK/WT	GROUND
32	Z12 14BK/TN	GROUND

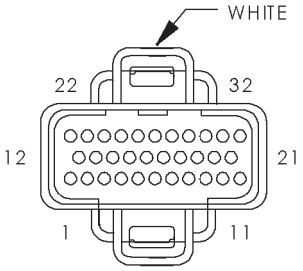

POWERTRAIN CONTROL MODULE - C2

POWERTRAIN CONTROL MODULE C2 - WHITE 32 WAY

CAV	CIRCUIT	FUNCTION
1	T54 18VT (4.0L)	TRANSMISSION TEMPERATURE SENSOR SIGNAL
2	K17 18DB/TN (4.7L)	FUEL INJECTOR NO. 7 DRIVER
3	-	-
4	K11 18WT/DB	FUEL INJECTOR NO. 1 DRIVER
5	K13 18YL/WT	FUEL INJECTOR NO. 3 DRIVER
6	K38 18GY	FUEL INJECTOR NO. 5 DRIVER
7	K97 14BR (4.7L)	COIL DRIVER NO. 7
8	K88 18PK (4.0L)	GOVERNOR PRESSURE SOLENOID CONTROL
9	K92 16TN/PK (4.0L)	COIL DRIVER NO. 2
9	K92 14TN/PK (4.7L)	COIL DRIVER NO. 2
10	K20 18DG	GENERATOR FIELD DRIVER
11	T22 18DG/LB (4.0L)	TORQUE CONVERTER CLUTCH SOLENOID CONTROL
12	K58 18BR/DB	FUEL INJECTOR NO. 6 DRIVER
13	K18 18DB/GY (4.7L)	FUEL INJECTOR NO. 8 DRIVER
14	-	-
15	K12 18TN	FUEL INJECTOR NO. 2 DRIVER
16	K14 18LB/BR	FUEL INJECTOR NO. 4 DRIVER
17	C240 18DB/RD (4.7L)	ENGINE COOLANT TEMPERATURE
17	C24 18DB/PK (4.0L)	RADIATOR FAN RELAY CONTROL
18	-	-
19	C18 18DB	A/C PRESSURE SIGNAL
20	-	-
21	T121 18BR/WT (4.0L)	3-4 SHIFT SOLENOID CONTROL
22	-	-
23	G60 18GY/YL	ENGINE OIL PRESSURE SENSOR SIGNAL
24	-	-

POWERTRAIN CONTROL MODULE C2 - WHITE 32 WAY

CAV	CIRCUIT	FUNCTION
25	T13 18DB/BK (4.0L)	OUTPUT SPEED SENSOR SIGNAL
26	-	-
27	G7 18WT/OR	VEHICLE SPEED SIGNAL
28	T14 18LG/WT (4.0L)	OUTPUT SPEED SENSOR GROUND
29	T25 18LG/RD (4.0L)	GOVERNOR PRESSURE SENSOR SIGNAL
30	K30 18PK/YL (4.0L)	TRANSMISSION CONTROL RELAY CONTROL
31	K6 18VT/BK	5V SUPPLY
32	-	-

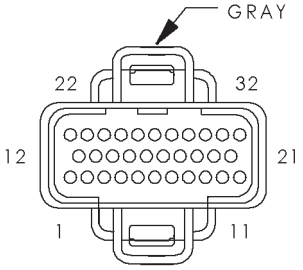

POWERTRAIN CONTROL MODULE - C3

POWERTRAIN CONTROL MODULE C3 - GRAY 32 WAY

CAV	CIRCUIT	FUNCTION
1	C13 18DB/OR	A/C COMPRESSOR CLUTCH RELAY CONTROL
2	-	-
3	K51 18DB/YL	AUTOMATIC SHUT DOWN RELAY CONTROL
4	V36 18TN/RD	SPEED CONTROL VACUUM SOLENOID CONTROL
5	V35 18LG/RD	SPEED CONTROL VENT SOLENOID CONTROL
6	-	-
7	K42 18DB/LG (4.7L HIGH OUTPUT)	KNOCK SENSOR SIGNAL
8	K99 18GY/WT	OXYGEN SENSOR 1/1 HEATER CONTROL
9	K251 18LB	OXYGEN SENSOR DOWNSTREAM RELAY CONTROL
10	K106 18WT/DG	LEAK DETECTION PUMP SOLENOID CONTROL
11	V32 18OR/DG	SPEED CONTROL SUPPLY
12	F42 18DG/LG	FUSED AUTOMATIC SHUT DOWN RELAY OUTPUT
13	T99 18OR/YL	TORQUE MANAGEMENT REQUEST SENSE
14	K107 18OR/PK	LEAK DETECTION PUMP SWITCH SENSE
15	K25 18VT/LG	BATTERY TEMPERATURE SENSOR SIGNAL
16	K199 18DB/WT	OXYGEN SENSOR 2/1 HEATER CONTROL
17	-	-
18	K142 18GY/BK (4.7L HIGH OUTPUT)	KNOCK SENSOR NO. 2 SIGNAL
19	K31 18BR	FUEL PUMP RELAY CONTROL
20	K52 18PK/BK	DUTY CYCLE EVAP/PURGE SOLENOID CONTROL
21	-	-
22	C21 18DB/YL (4.7L)	A/C SWITCH SENSE
22	C18 18DB (4.0L)	A/C PRESSURE SIGNAL
23	-	-
24	K29 18WT/PK	BRAKE SWITCH SENSE
25	K21 18LB/RD	GENERATOR SOURCE
26	K226 18LB/YL	FUEL LEVEL SENSOR SIGNAL
27	D21 18PK	SCI TRANSMIT
28	-	-
29	D32 18LG/DG	SCI RECEIVE
30	D25 18YL/VT	PCI BUS
31	-	-
32	V37 18RD/LG	SPEED CONTROL SWITCH SIGNAL

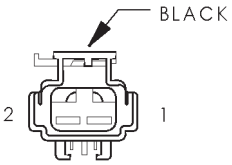

RADIATOR FAN MOTOR

RADIATOR FAN MOTOR - BLACK 2 WAY

CAV	CIRCUIT	FUNCTION
1	C23 12DG	RADIATOR FAN RELAY OUTPUT
2	Z4 12BK/PK	GROUND

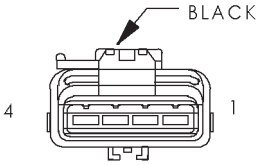

RADIATOR FAN RELAY

RADIATOR FAN RELAY - BLACK 4 WAY

CAV	CIRCUIT	FUNCTION
1	Z1 20BK	GROUND
2	C24 20DB/PK	RADIATOR FAN RELAY CONTROL
3	C23 12DG	RADIATOR FAN RELAY OUTPUT
4	A16 12GY	FUSED B(+)

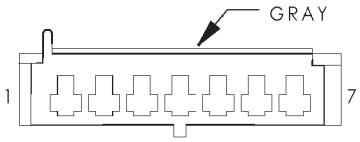

RADIO - C1

RADIO C1 - GRAY 7 WAY

CAV	CIRCUIT	FUNCTION
1	-	-
2	X55 18BR/RD	LEFT FRONT SPEAKER (-)
3	X56 18DB/PK	RIGHT FRONT SPEAKER (-)
4	L7 18BK/YL	PARK LAMP RELAY OUTPUT
5	E2 20OR	PANEL LAMPS DRIVER
6	X12 16WT/RD	FUSED IGNITION SWITCH OUTPUT (RUN-ACC)
7	F60 16RD/WT	FUSED B(+)

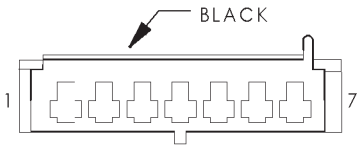

RADIO - C2

RADIO C2 - BLACK 7 WAY

CAV	CIRCUIT	FUNCTION
1	X64 18BR/WT	ENABLE SIGNAL TO AMPLIFIER
2	X51 18WT/DG	LEFT REAR SPEAKER (+)
3	X52 18DB/WT	RIGHT REAR SPEAKER (+)
4	X53 18DG/OR	LEFT FRONT SPEAKER (+)
5	X54 18VT	RIGHT FRONT SPEAKER (+)
6	X57 18DG/WT	LEFT REAR SPEAKER (-)
7	X58 18DB/OR	RIGHT REAR SPEAKER (-)

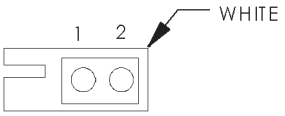

RADIO - C3

RADIO C3 - WHITE 2 WAY

CAV	CIRCUIT	FUNCTION
1	D25 18YL/VT/DB	PCI BUS
2	-	-

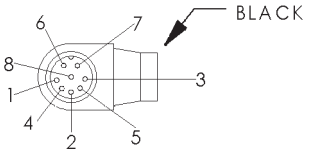

RADIO - C4 (PREMIUM)

RADIO C4 (PREMIUM) - BLACK 8 WAY

CAV	CIRCUIT	FUNCTION
1	-	-
2	X40 22WT/RD	AUDIO OUT RIGHT
3	-	-
4	Z4 22WT/BK	GROUND
5	X41 22WT/DG	AUDIO OUT LEFT
6	X160 22YL	B(+)
7	X112 22RD	IGNITION SWITCH OUTPUT
8	Z17 22BK	GROUND

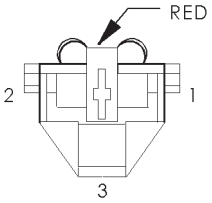

REAR POWER OUTLET (EXCEPT BASE)

REAR POWER OUTLET (EXCEPT BASE) - RED 3 WAY

CAV	CIRCUIT	FUNCTION
1	A148 16VT	FUSED B(+)
2	-	-
3	Z1 16BK	GROUND

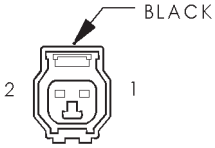

REAR WASHER PUMP

REAR WASHER PUMP - BLACK 2 WAY

CAV	CIRCUIT	FUNCTION
1	Z1 18BK	GROUND
2	V20 18BK/WT	REAR WASHER MOTOR CONTROL

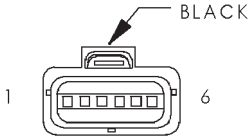

REAR WIPER MOTOR

REAR WIPER MOTOR - BLACK 6 WAY

CAV	CIRCUIT	FUNCTION
1	Z1 18BK	GROUND
2	V13 18BR/LG	REAR WIPER MOTOR CONTROL
3	G80 20VT/YL	LIFTGATE FLIP-UP AJAR SWITCH SENSE
4	V22 18BR/YL	REAR WIPER MOTOR DELAY CONTROL
5	F70 18BK	FUSED B(+)
6	-	-

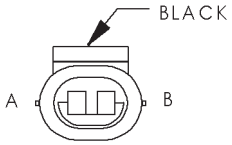

RECIRCULATION DOOR MOTOR/ ACTUATOR (AZC)

RECIRCULATION DOOR MOTOR/ACTUATOR (AZC) - BLACK 2 WAY

CAV	CIRCUIT	FUNCTION
A	C32 20VT/OR	RECIRCULATION DOOR DRIVER (A)
B	C100 20LB/DG	RECIRCULATION DOOR DRIVER (B)

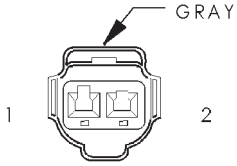

RED BRAKE WARNING INDICATOR SWITCH

RED BRAKE WARNING INDICATOR SWITCH - GRAY 2 WAY

CAV	CIRCUIT	FUNCTION
1	Z1 18BK	GROUND
2	G9 18GY/BK	RED BRAKE WARNING INDICATOR DRIVER

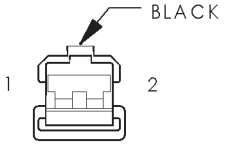

RIGHT COURTESY LAMP

RIGHT COURTESY LAMP - BLACK 2 WAY

CAV	CIRCUIT	FUNCTION
1	F70 20PK/BK	FUSED B(+)
2	M2 20YL	COURTESY LAMP DRIVER

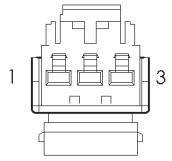

RIGHT DOOR HANDLE COURTESY LAMP

RIGHT DOOR HANDLE COURTESY LAMP - 3 WAY

CAV	CIRCUIT	FUNCTION
1	F70 20PK	FUSED B(+)
2	M20 20YL/BK	COURTESY LAMP LOAD SHEED
3	M2 20YL/DG	COURTESY LAMP DRIVER

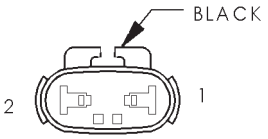

RIGHT FOG LAMP

RIGHT FOG LAMP - BLACK 2 WAY

CAV	CIRCUIT	FUNCTION
A	L39 20LB	FOG LAMP RELAY OUTPUT
B	Z1 20BK	GROUND

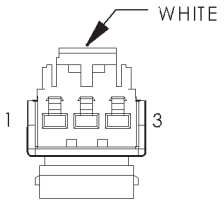

RIGHT FRONT DOOR SPEAKER

RIGHT FRONT DOOR SPEAKER - WHITE 3 WAY

CAV	CIRCUIT	FUNCTION
1	X80 18LB/BK	RIGHT FRONT DOOR SPEAKER (-)
2	-	-
3	X82 18LB/RD	RIGHT FRONT DOOR SPEAKER (+)

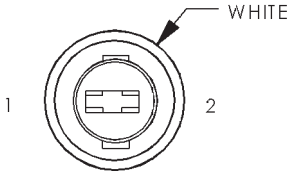

RIGHT FRONT PARK LAMP

RIGHT FRONT PARK LAMP - WHITE 2 WAY

CAV	CIRCUIT	FUNCTION
1	Z1 18BK	GROUND
2	L7 20BK/PK	PARK LAMP RELAY OUTPUT

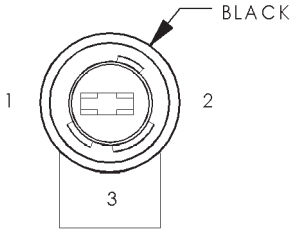

RIGHT FRONT PARK/TURN SIGNAL LAMP

RIGHT FRONT PARK/TURN SIGNAL LAMP - BLACK 3 WAY

CAV	CIRCUIT	FUNCTION
1	L7 20BK/PK	PARK LAMP RELAY OUTPUT
2	Z1 18BK	GROUND
3	L60 20TN	RIGHT TURN SIGNAL

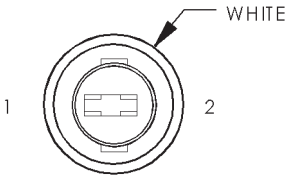

RIGHT FRONT SIDE MARKER LAMP

RIGHT FRONT SIDE MARKER LAMP - WHITE 2 WAY

CAV	CIRCUIT	FUNCTION
1	L7 20BK/PK	PARK LAMP RELAY OUTPUT
2	L60 20TN	RIGHT TURN SIGNAL

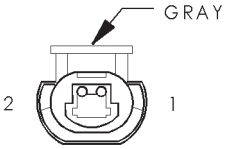

RIGHT FRONT WHEEL SPEED SENSOR

RIGHT FRONT WHEEL SPEED SENSOR - GRAY 2 WAY

CAV	CIRCUIT	FUNCTION
1	B6 18WT/DB	RIGHT FRONT WHEEL SPEED SENSOR 12 VOLT SUPPLY
2	B7 18WT	RIGHT FRONT WHEEL SPEED SENSOR SIGNAL

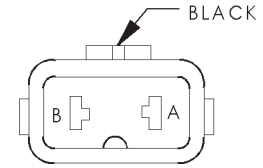

RIGHT HIGH BEAM HEADLAMP

RIGHT HIGH BEAM HEADLAMP - BLACK 2 WAY

CAV	CIRCUIT	FUNCTION
A	Z1 18BK	GROUND
B	L34 18RD/OR	FUSED RIGHT HIGH BEAM OUTPUT

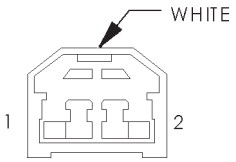

RIGHT INSTRUMENT PANEL SPEAKER

RIGHT INSTRUMENT PANEL SPEAKER - WHITE 2 WAY

CAV	CIRCUIT	FUNCTION
1	X86 18OR/RD	RIGHT INSTRUMENT PANEL SPEAKER (+)
2	X84 18OR/GY	RIGHT INSTRUMENT PANEL SPEAKER (-)

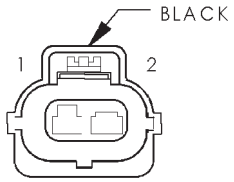

RIGHT LIFTGATE AJAR SWITCH

RIGHT LIFTGATE AJAR SWITCH - BLACK 2 WAY

CAV	CIRCUIT	FUNCTION
1	Z1 20BK	GROUND
2	G78 20TN/BK	LIFTGATE AJAR SWITCH SENSE

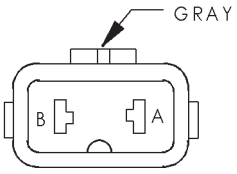

RIGHT LOW BEAM HEADLAMP

RIGHT LOW BEAM HEADLAMP - GRAY 2 WAY

CAV	CIRCUIT	FUNCTION
A	Z1 18BK	GROUND
B	L44 18VT/RD	FUSED RIGHT LOW BEAM OUTPUT

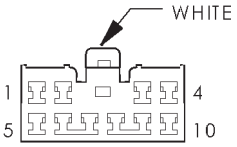

RIGHT MULTI-FUNCTION SWITCH

RIGHT MULTI-FUNCTION SWITCH - WHITE 10 WAY

CAV	CIRCUIT	FUNCTION
1	V23 20BR/PK	FUSED IGNITION SWITCH OUTPUT (RUN-ACC)
2	V20 18BK/WT	REAR WASHER PUMP MOTOR CONTROL
3	V10 20BR	WASHER PUMP MOTOR SWITCH OUTPUT
4	-	-
5	V13 18BR/LG	REAR WIPER MOTOR CONTROL
6	V22 18BR/YL	REAR WIPER MOTOR DELAY CONTROL
7	V59 22DB/YL	WINDSHIELD WIPER SWITCH RETURN
8	V52 22DG/RD	WINDSHIELD WIPER SWITCH MUX
9	V16 22VT	WIPER HIGH/LOW RELAY CONTROL
10	-	-

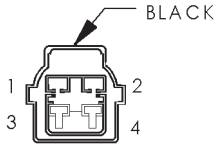

RIGHT REAR DOOR POWER LOCK MOTOR/ AJAR SWITCH

RIGHT REAR DOOR POWER LOCK MOTOR/AJAR SWITCH - BLACK 4 WAY

CAV	CIRCUIT	FUNCTION
1	G76 18TN/YL	DOOR AJAR SWITCH SENSE
2	Z1 18BK	GROUND
3	P36 18PK/VT	DOOR UNLOCK DRIVER
4	P35 18OR/VT	DOOR LOCK DRIVER

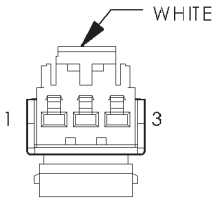

RIGHT REAR DOOR SPEAKER

RIGHT REAR DOOR SPEAKER - WHITE 3 WAY

CAV	CIRCUIT	FUNCTION
1	X90 18WT/VT	RIGHT REAR DOOR SPEAKER (+)
2	-	-
3	X92 18TN/DG	RIGHT REAR DOOR SPEAKER (-)

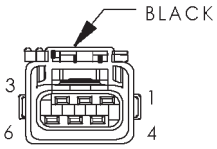

RIGHT REAR LAMP ASSEMBLY

RIGHT REAR LAMP ASSEMBLY - BLACK 6 WAY

CAV	CIRCUIT	FUNCTION
1	L1 18VT/BK	BACK-UP LAMP FEED
2	-	-
3	L7 18BK/YL	PARK LAMP RELAY OUTPUT
4	L62 18BR/RD	RIGHT TURN SIGNAL
5	Z1 18BK	GROUND
6	L50 18WT/TN	BRAKE LAMP SWITCH OUTPUT

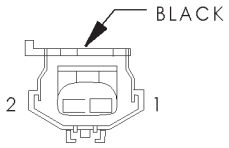

RIGHT REAR WHEEL SPEED SENSOR

RIGHT REAR WHEEL SPEED SENSOR - BLACK 2 WAY

CAV	CIRCUIT	FUNCTION
1	B1 18YL/DB	RIGHT REAR WHEEL SPEED SENSOR 12 VOLT SUPPLY
2	B2 18YL	RIGHT REAR WHEEL SPEED SENSOR SIGNAL

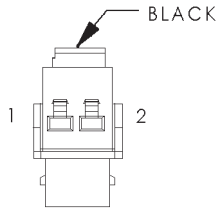

RIGHT REMOTE RADIO SWITCH

RIGHT REMOTE RADIO SWITCH - BLACK 2 WAY

CAV	CIRCUIT	FUNCTION
1	X10 20RD/BK	RADIO CONTROL MUX RETURN
2	X20 20RD/YL	RADIO CONTROL MUX

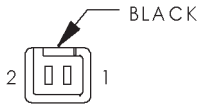

RIGHT VISOR/ VANITY LAMP

RIGHT VISOR/VANITY LAMP - BLACK 2 WAY

CAV	CIRCUIT	FUNCTION
1	F70 20PK	FUSED B(+)
2	M20 20YL/BK	COURTESY LAMP LOAD SHED

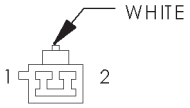

SEAT BELT SWITCH

SEAT BELT SWITCH - WHITE 2 WAY

CAV	CIRCUIT	FUNCTION
1	G10 20LG/RD	SEAT BELT SWITCH SENSE
2	Z1 20BK	GROUND

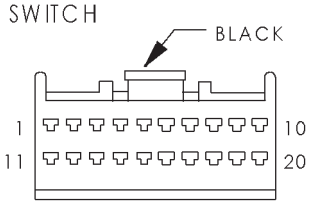

SEAT MODULE - C1 (PREMIUM)

SEAT MODULE C1 (PREMIUM) - BLACK 20 WAY

CAV	CIRCUIT	FUNCTION
1	P15 20YL/LB (PREMIUM II/III)	SEAT HORIZONTAL FORWARD SWITCH SENSE
2	-	-
3	P11 20YL/WT(PREMIUM II/III)	SEAT REAR UP SWITCH SENSE
4	P43 20GY/LB (PREMIUM II/III)	RECLINER UP SWITCH SENSE
5	P19 20YL/LG (PREMIUM II/III)	SEAT FRONT UP SWITCH SENSE
6	P86 20DG/YL (PREMIUM I/III)	PASSENGER SEAT TEMPERATURE SENSOR INPUT
7	P27 20LB/RD (PREMIUM II/III)	REAR RISER POSITION SIGNAL
8	P25 20VT/RD (PREMIUM II/III)	SEAT HORIZONTAL POSITION SIGNAL
9	P135 20LB/BK (PREMIUM I/III)	DRIVER SEAT TEMPERATURE SENSOR INPUT
10	P28 20BR/RD (PREMIUM II/III)	SEAT POSITION SENSOR GROUND
11	P41 20GY/WT (PREMIUM II/III)	RECLINER DOWN SWITCH SENSE
12	P17 20RD/YL (PREMIUM II/III)	SEAT HORIZONTAL REARWARD SWITCH SENSE
13	-	-
14	P21 20RD/LG (PREMIUM II/III)	DRIVER SEAT FRONT DOWN SWITCH SENSE
15	P13 20RD/WT (PREMIUM II/III)	SEAT REAR DOWN SWITCH SENSE
16	P47 20LB (PREMIUM II/III)	RECLINER POSITION SIGNAL
17	P26 20BR (PREMIUM II/III)	FRONT RISER POSITION SIGNAL
18	P29 20BR/WT	SEAT SENSOR 5V SUPPLY
19	Z2 20BK/OR	GROUND
20	D25 20YL/VT	PCI BUS

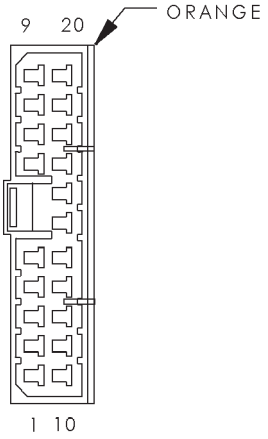

SEAT MODULE - C2 (PREMIUM)

SEAT MODULE C2 (PREMIUM) - ORANGE 20 WAY

CAV	CIRCUIT	FUNCTION
1	F35 16RD	FUSED B(+)
2	P131 16BK/OR (PREMIUM I/III)	DRIVER SEAT HEATER B(+) DRIVER
3	Z1 16BK	GROUND
4	P119 16YL/RD (PREMIUM II/III)	SEAT FRONT UP DRIVER
5	P121 16RD/GY (PREMIUM II/III)	SEAT FRONT DOWN DRIVER
6	P111 16YL/DB (PREMIUM II/III)	SEAT REAR UP DRIVER
7	P113 16RD/BK (PREMIUM II/III)	SEAT REAR DOWN DRIVER
8	-	-
9	P115 16GY/LG (PREMIUM II/III)	SEAT HORIZONTAL FORWARD DRIVER
10	F35 16RD	FUSED B(+)
11	P130 16DG/WT (PREMIUM I/III)	PASSENGER SEAT HEATER B(+) DRIVER
12	Z1 16BK	GROUND
13	-	-
14	P9 20RD/LB (PREMIUM II/III)	SEAT SWITCH B(+) SUPPLY
15	Z6 16BK/YL (PREMIUM II/III)	GROUND
16	Z5 16BK/VT (PREMIUM II/III)	GROUND
17	-	-
18	P141 16GY/WT (PREMIUM II/III)	SEAT RECLINER DOWN DRIVER
19	P143 16GY/LB (PREMIUM II/III)	SEAT RECLINER UP DRIVER
20	P117 16RD/BR (PREMIUM II/III)	SEAT HORIZONTAL REARWARD DRIVER

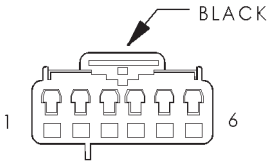

SENTRY KEY IMMOBILIZER MODULE

SENTRY KEY IMMOBILIZER MODULE - BLACK 6 WAY

CAV	CIRCUIT	FUNCTION
1	M1 20PK	FUSED B(+)
2	Z2 20BK/OR	GROUND
3	G5 20DB/WT	FUSED IGNITION SWITCH OUTPUT (RUN-START)
4	-	-
5	D25 20YL/VT/BK	PCI BUS
6	-	-

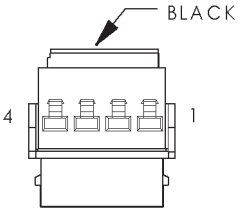

SPEED CONTROL SWITCH NO. 1

SPEED CONTROL SWITCH NO. 1- BLACK 4 WAY

CAV	CIRCUIT	FUNCTION
1	-	-
2	K4 20BK/LB	SENSOR GROUND
3	V37 20RD/LG	SPEED CONTROL SWITCH SIGNAL
4	-	-

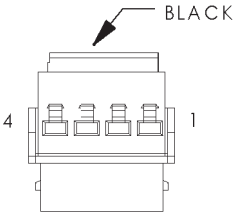

SPEED CONTROL SWITCH NO. 2

SPEED CONTROL SWITCH NO. 2 - BLACK 4 WAY

CAV	CIRCUIT	FUNCTION
1	-	-
2	K4 20BK/LB	SENSOR GROUND
3	V37 20RD/LG	SPEED CONTROL SWITCH SIGNAL
4	-	-

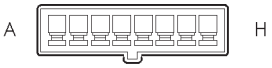

SUNROOF CONTROL MODULE

SUNROOF CONTROL MODULE - 8 WAY

CAV	CIRCUIT	FUNCTION
A	Q46 20OR/WT	SUNROOF MOTOR POSITION SENSOR SIGNAL
B	Q41 20WT	SUNROOF OPEN
C	Q43 20VT	SUNROOF VENT
D	Z1 16BK	GROUND
E	-	-
F	Q30 16DB	SUNROOF DELAY RELAY OUTPUT
G	Q5 16RD	SUNROOF MOTOR B(+)
H	Q6 16OR	SUNROOF MOTOR B(-)

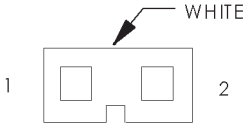

SUNROOF MOTOR - C1

SUNROOF MOTOR C1 - WHITE 2 WAY

CAV	CIRCUIT	FUNCTION
1	Q5 16RD	SUNROOF MOTOR B(+)
2	Q6 16OR	SUNROOF MOTOR B(-)

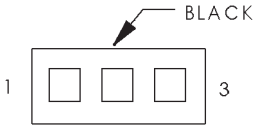

SUNROOF MOTOR - C2

SUNROOF MOTOR C2 - BLACK 3 WAY

CAV	CIRCUIT	FUNCTION
1	Z1 20BK	GROUND
2	Q46 20OR/WT	SUNROOF MOTOR POSITION SENSOR SIGNAL
3	-	-

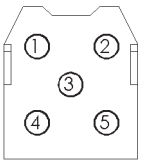

SUNROOF SWITCH

SUNROOF SWITCH - 5 WAY

CAV	CIRCUIT	FUNCTION
1	Q43 20VT	SUNROOF VENT
2	-	-
3	Z1 20BK	GROUND
4	-	-
5	Q41 20WT	SUNROOF OPEN

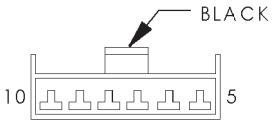

TEMPERATURE VALVE ACTUATOR (MTC)

TEMPERATURE VALVE ACTUATOR (MTC) - BLACK 6 WAY

CAV	CIRCUIT	FUNCTION
5	-	-
6	-	-
7	Z2 20VT/WT	GROUND
8	C67 20DB/RD	BLEND AIR DOOR POSITION CONTROL
9	-	-
10	F22 20PK/DG	FUSED IGNITION SWITCH OUTPUT (RUN)

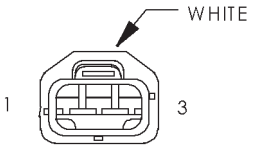

THROTTLE POSITION SENSOR (4.0L)

THROTTLE POSITION SENSOR (4.0L) - WHITE 3 WAY

CAV	CIRCUIT	FUNCTION
1	K4 18BK/LB	SENSOR GROUND
2	K22 18OR/RD	THROTTLE POSITION SENSOR SIGNAL
3	K7 20OR	5V SUPPLY

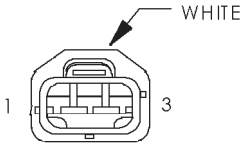

THROTTLE POSITION SENSOR (4.7L)

THROTTLE POSITION SENSOR (4.7L) - WHITE 3 WAY

CAV	CIRCUIT	FUNCTION
1	K7 20OR	5V SUPPLY
2	K22 18OR/RD	THROTTLE POSITION SENSOR SIGNAL
3	K4 18BK/LB	SENSOR GROUND

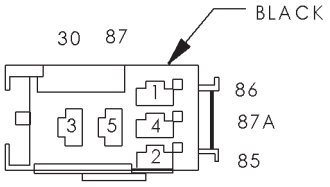

TRAILER TOW BRAKE LAMP RELAY

TRAILER TOW BRAKE LAMP RELAY - BLACK 5 WAY

CAV	CIRCUIT	FUNCTION
3O (3)	L50 16WT/TN	BRAKE LAMP SWITCH OUTPUT
85 (2)	L50 18WT/TN	BRAKE LAMP SWITCH OUTPUT
86 (1)	Z1 18BK	GROUND
87 (5)	L95 16DG/YL	TRAILER TOW BRAKE LAMP RELAY OUTPUT
87A (4)	L94 16OR/WT	TRAILER TOW BRAKE LAMP RELAY OUTPUT

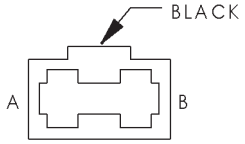

TRAILER TOW CIRCUIT BREAKER

TRAILER TOW CIRCUIT BREAKER - BLACK 2 WAY

CAV	CIRCUIT	FUNCTION
A	F30 14RD	FUSED CIGAR LIGHTER RELAY OUTPUT
B	F30 14RD	CIGAR LIGHTER RELAY OUTPUT

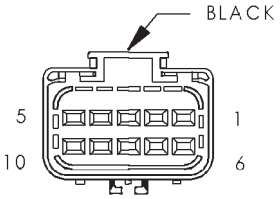

TRAILER TOW CONNECTOR

TRAILER TOW CONNECTOR - BLACK 10 WAY

CAV	CIRCUIT	FUNCTION
1	-	-
2	L62 16BR/RD	RIGHT TURN SIGNAL
3	L1 18VT/BK	BACK-UP LAMP FEED
4	F30 14RD	FUSED CIGAR LIGHTER RELAY OUTPUT
5	L7 18BK/YL	PARK LAMP RELAY OUTPUT
6	-	-
7	B40 14LB	TRAILER TOW BRAKE B(+)
8	Z1 14BK	GROUND
9	Z1 14BK	GROUND
10	L63 16DG/RD	LEFT TURN SIGNAL

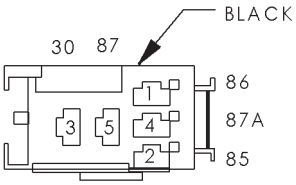

TRAILER TOW LEFT TURN RELAY

TRAILER TOW LEFT TURN RELAY - BLACK 5 WAY

CAV	CIRCUIT	FUNCTION
30 (3)	L63 16DG/RD	LEFT TURN SIGNAL
85 (2)	L63 20DG/RD	LEFT TURN SIGNAL
86 (1)	Z1 18BK	GROUND
87 (5)	L94 16OR/WT	TRAILER TOW BRAKE LAMP RELAY OUTPUT
87A (4)	L95 16DG/YL	TRAILER TOW BRAKE LAMP RELAY OUTPUT

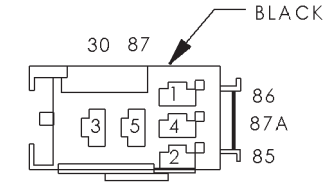

TRAILER TOW RIGHT TURN RELAY

TRAILER TOW RIGHT TURN RELAY - BLACK 5 WAY

CAV	CIRCUIT	FUNCTION
30 (3)	L62 16BR/RD	RIGHT TURN SIGNAL
85 (2)	L62 20BR/RD	RIGHT TURN SIGNAL
86 (1)	Z1 18BK	GROUND
87 (5)	L94 16OR/WT	TRAILER TOW BRAKE LAMP RELAY OUTPUT
87A (4)	L95 16DG/YL	TRAILER TOW BRAKE LAMP RELAY OUTPUT

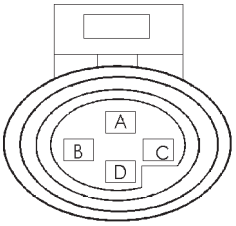

TRANSFER CASE SWITCH (4.0L)

TRANSFER CASE SWITCH (4.0L) - 4 WAY

CAV	CIRCUIT	FUNCTION
A	Z1 18BK	GROUND
B	T107 18BK	PART TIME 4 WHEEL DRIVE INDICATOR DRIVER
C	-	-
D	-	-

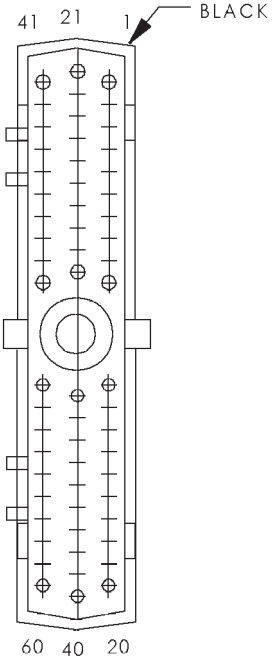

TRANSMISSION CONTROL MODULE (4.7L)

TRANSMISSION CONTROL MODULE (4.7L) - BLACK 60

CAV	CIRCUIT	FUNCTION
1	T1 18LG/BK	TRS T1 SENSE
2	T2 18TN/BK	TRS T2 SENSE
3	T3 18VT	TRS T3 SENSE
4	-	-
5	-	-
6	K24 18GY/BK	CRANKSHAFT POSITION SENSOR SIGNAL
7	D21 20PK	SCI TRANSMIT
8	F45 18YL/RD	FUSED IGNITION SWITCH OUTPUT (START)
9	T9 18OR/BK	OVERDRIVE PRESSURE SWITCH SENSE
10	T10 18YL/DG	TORQUE MANAGEMENT REQUEST SENSE
11	F991 18OR/BK	FUSED IGNITION SWITCH OUTPUT (RUN-START)
12	K22 18OR/RD	THROTTLE POSITION SENSOR SIGNAL
13	T13 18DB/BK	SPEED SENSOR GROUND
14	T14 18LG/WT	OUTPUT SPEED SENSOR SIGNAL
15	K30 18PK/YL	TRANSMISSION CONTROL RELAY CONTROL
16	T16 14RD	TRANSMISSION CONTROL RELAY OUTPUT
17	T16 14RD	TRANSMISSION CONTROL RELAY OUTPUT
18	T118 18YL/DB	PRESSURE CONTROL SOLENOID CONTROL
19	T119 18WT/DB	2C SOLENOID CONTROL
20	T120 18LG	LR SOLENOID CONTROL
21	-	-
22	-	-

TRANSMISSION CONTROL MODULE (4.7L) - BLACK 60

CAV	CIRCUIT	FUNCTION
23	-	-
24	-	-
25	-	-
26	-	-
27	-	-
28	G7 18WT/OR	VEHICLE SPEED SIGNAL
29	T29 18GY	UNDERDRIVE PRESSURE SWITCH SENSE
30	T130 14VT/TN	LINE PRESSURE SENSOR SIGNAL
31	-	-
32	-	-
33	-	-
34	-	-
35	-	-
36	T16 14RD	TRANSMISSION CONTROL RELAY OUTPUT
37	Z14 14BK/YL	GROUND
38	T138 14GY/LB	5V SUPPLY
39	Z14 14BK/YL	GROUND
40	T140 18VT/LG	MS SOLENOID CONTROL
41	T41 18WT	TRS T41 SENSE
42	T42 18VT/WT	TRS T41 SENSE
43	D25 18YL/VT	PCI BUS
44	-	-
45	-	-
46	D20 20LG	SCI RECEIVE
47	T147 18LB	2C PRESSURE SWITCH SENSE
48	T48 18DB	4C PRESSURE SWITCH SENSE
49	T6 18VT/WT	OVERDRIVE OFF SWITCH SENSE
50	T150 18BR/LB	LR PRESSURE SWITCH SENSE
51	K4 18BK/LB	SENSOR GROUND
52	T52 18RD/BK	INPUT SPEED SENSOR SIGNAL
53	Z13 14BK/RD	GROUND
54	T54 18VT	TRANMISSION TEMPERATURE SENSOR SIGNAL
55	T59 18PK	UNDERDRIVE SOLENOID CONTROL
56	A30 14RD/WT	FUSED B(+)
57	Z14 14BK/YL	GROUND
58	-	-
59	T159 18DG/WT	4C SOLENOID CONTROL
60	T60 18BR	OVERDRIVE SOLENOID CONTROL

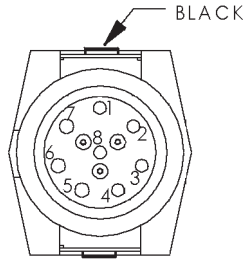

TRANSMISSION SOLENOID (4.0L)

TRANSMISSION SOLENOID (4.0L) - BLACK 8 WAY

CAV	CIRCUIT	FUNCTION
1	T60 18BR	FUSED TRANSMISSION CONTROL RELAY OUTPUT
2	K6 18VT/BK	5V SUPPLY
3	K4 18BK/LB	SENSOR GROUND
4	T25 18LG	GOVERNOR PRESSURE SENSOR SIGNAL
5	K88 18PK	GOVERNOR PRESSURE SOLENOID CONTROL
6	T121 18BR/WT	3-4 SHIFT SOLENOID CONTROL
7	T22 18DG/LB	TORQUE CONVERTER CLUTCH SOLENOID CONTROL
8	T54 18VT	TRANSMISSION TEMPERATURE SENSOR SIGNAL

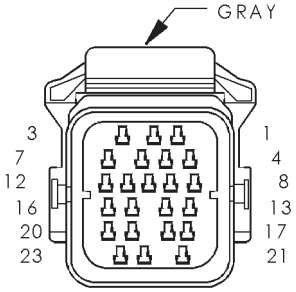

TRANSMISSION SOLENOID/ TRS ASSEMBLY (4.7L)

TRANSMISSION SOLENOID/TRS ASSEMBLY (4.7L) - GRAY 23 WAY

CAV	CIRCUIT	FUNCTION
1	F22 18WT/TN	FUSED IGNITION SWITCH OUTPUT (RUN)
2	T120 18LG	LR SOLENOID CONTROL
3	T41 18BR/YL	PARK/NEUTRAL POSITION SWITCH SENSE
4	T41 18WT	TRS T41 SENSE
5	T42 18VT/WT	TRS T42 SENSE
6	L1 18VT/BK	BACK-UP LAMP FEED
7	T60 18BR	OVERDRIVE SOLENOID CONTROL
8	T3 18VT	TRS T3 SENSE
9	T1 18LG/BK	TRS T1 SENSE
10	T16 14RD	TRANSMISSION CONTROL RELAY OUTPUT
11	T48 18DB	4C PRESSURE SWITCH SENSE
12	T118 18YL/DB	PRESSURE CONTROL SOLENOID CONTROL
13	T2 18TN/BK	TRS T2 SENSE
14	T150 18BR/LB	LR PRESSURE SWITCH SENSE
15	T147 18LB	2C PRESSURE SWITCH SENSE
16	T9 18OR/BK	OVERDRIVE PRESSURE SWITCH SENSE
17	T59 18PK	UNDERDRIVE SOLENOID CONTROL
18	T29 18GY	UNDERDRIVE PRESSURE SWITCH SENSE
19	T159 18DG/WT	4C SOLENOID CONTROL
20	T119 18WT/DB	2C SOLENOID CONTROL
21	T140 18VT/LG	MS SOLENOID CONTROL
22	T13 18DB/BK	SPEED SENSOR GROUND
23	T54 18VT	TRANSMISSION TEMPERATURE SENSOR SIGNAL

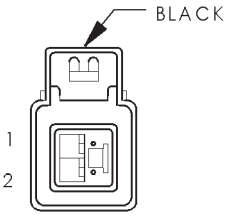

UNDERHOOD LAMP

UNDERHOOD LAMP - BLACK 2 WAY

CAV	CIRCUIT	FUNCTION
1	Z1 20BK	GROUND
2	M1 20PK/RD	FUSED B(+)

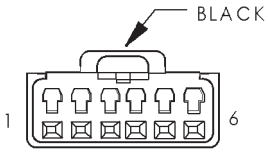

VEHICLE INFORMATION CENTER

VEHICLE INFORMATION CENTER - BLACK 6 WAY

CAV	CIRCUIT	FUNCTION
1	-	-
2	D25 20VT/YL	PCI BUS
3	F70 20PK	FUSED B(+)
4	Z2 20BK/OR	GROUND
5	G5 20DB/WT	FUSED IGNITION SWITCH OUTPUT (RUN-START)
6	-	-

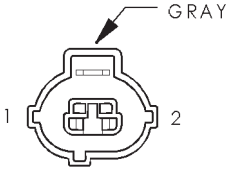

WASHER FLUID LEVEL SWITCH

WASHER FLUID LEVEL SWITCH - GRAY 2 WAY

CAV	CIRCUIT	FUNCTION
1	V11 20BK/TN	WASHER FLUID SWITCH SENSE
2	Z1 20BK	GROUND

8W-90 CONNECTOR/GROUND LOCATIONS

TABLE OF CONTENTS

page

CONNECTOR/GROUND LOCATIONS
DESCRIPTION 1

CONNECTOR/GROUND LOCATIONS

DESCRIPTION

This section provides illustrations identifying connector and ground locations in the vehicle. A connector and ground index is provided. Use the wiring diagrams in each section for connector and ground identification. Refer to the index for the proper figure number. For items that are not shown in this section N/S is placed in the Fig. column.

Connector Name/Number	Color	Location	Fig.
A/C Compressor Clutch	BK	At Compressor	1
A/C High Pressure Switch	BK	Near Radiator Fan Motor	10
A/C Low Pressure Switch	GY	Right Rear Engine Compartment	10
Airbag Control Module	YL	Below Center Floor Console, Near Park Brake	20, 22
Ambient Temperature Sensor	BK	On Radiator Center Support	10
Antena Module	WT	Above Right Quarter Window	25
Ash Receiver Lamp	BK	Below Cigarette Lighter	22
Automatic Day/Night Mirror	BK	In Front of Rear View Mirror	N/S
Automatic Headlamp Light Sensor/VTSS LED	BK	Near Left Instrument Panel Speaker	22
Automatic Zone Control Module C1 (AZC)	BK	Left Side of HVAC Housing	22
Automatic Zone Control Module C2 (AZC)	BK	Left Side of HVAC Housing	22
Battery Temperature Sensor	BK	Below Battery Tray	10
Blower Motor	BK	Behind Right Side of Instrument Panel	N/S
Blower Motor Controller (AZC)	BK	Behind Right Side of Instrument Panel	N/S
Blower Motor Resistor Block (MTC)	BK	Behind Right Side of Instrument Panel	N/S
Body Control Module C1	GY	Lower Left of Instrument Panel	23
Body Control Module C2	WT	Lower Left of Instrument Panel	23
Brake Lamp Switch	GY	Brake Pedal Arm	14
Brake Transmission Shift Interlock Solenoid	WT	Bottom of Steering Column	24
Brake Warning Indicator Switch	GY	At Master Cylinder	N/S
C100	BK	Right Front Engine Compartment	10
C102	BK	Right Rear Engine Compartment	2, 5, 9, 10

CONNECTOR/GROUND LOCATIONS (Continued)

Connector Name/Number	Color	Location	Fig.
C103	GY	Right Rear Engine Compartment	2, 5, 9
C104	BK	Right Rear Engine Compartment	2, 9
C106	GY	Driver Side Near Kick Panel	12
C107	BK	Passenger Side Near Kick Panel	11, 14, 15
C108	BK	Left Cowl	11
C109	BK	Near Transfer Case Switch	N/S
C111	BK	Left Front Frame Near Windshield Washer Pump	11
C112	BK	Right Front Frame Near Horns	10
C200	GY	Passenger Side Near Kick Panel	12, 21, 22, 23
C201	WT	Below Center Floor Console, Near Park Brake	22
C202 (AZC)	WT	HVAC Unit Right Side of Instrument Panel	21, 22, 23
C202 (MTC)	WT	HVAC Unit Right Side of Instrument Panel	21, 22, 23
C203 (AZC)	WT	HVAC Unit Right Side Instrument Panel	21, 22, 23
C300	GY	Near Junction Block	13, 14, 15
C302	BK	Driver Door	14, 15, 18
C303	WT	Right Rear Door	12
C304	BK	Under Driver's Seat	13
C306	BK	Under Passenger Seat	12
C307	WT	Left Rear Door	13, 19
C308	WT	Top of Liftgate	16, 25
C309	WT	Left Rear Quarter Pillar	25
C310	LTGN	Above Left Quarter Wheel Housing	17, 25
C311	WT	Top of Liftgate	16
C312		Bottom Center of Liftgate	16
C313	WT	Driver's Door'	18
C314	LTGY	Passenger Door	14
C315		To Rear of Right Quarter Window	26
Camshaft Position Sensor	GY	Right Side of Engine	2, 5
Capacitor No. 1	BK	Right Side of Engine	2
Capacitor No. 2	BK	Left Side of Engine	1
Cargo Lamp	WT	In Headliner Near Liftgate	N/S
Center High Mounted Stop Lamp	BK	Top of Liftgate	N/S
Chime	BK	At Body Control Module	N/S
Cigar Lighter	RD	Center of Instrument Panel	22
Clockspring C1	GY	Steering Column	24
Clockspring C2	BK	Steering Column	24
Clockspring C3	YL	Steering Column	24
Coil On Plug No. 1 (4.7L)	BK	Left Side of Engine Near Fuel Injector No.1	1

CONNECTOR/GROUND LOCATIONS (Continued)

Connector Name/Number	Color	Location	Fig.
Coil On Plug No. 2 (4.7L)	BK	Right Side of Engine Near Fuel Injector No.2	2
Coil On Plug No. 3 (4.7L)	BK	Left Side of Engine Near Fuel Injector No.3	1
Coil On Plug No. 4 (4.7L)	BK	Right Side of Engine Near Fuel Injector No.4	2
Coil On Plug No. 5 (4.7L)	BK	Left Side of Engine Near Fuel Injector No.5	1
Coil On Plug No. 6 (4.7L)	BK	Right Side of Engine Near Fuel Injector No.6	2
Coil On Plug No. 7 (4.7L)	BK	Left Side of Engine Near Fuel Injector No.7	1
Coil On Plug No. 8 (4.7L)	BK	Right Side of Engine Near Fuel Injector No.8	2
Coil Rail	BK	Right Rear of Engine	5
Compact Disc Changer	BK	Right Rear Quarter Panel	25
Controller Antilock Brake	BK	Left Front Engine Compartment	11
Coolant Level Sensor	LTGY	Right Rear of Engine	10
Crankshaft Position Sensor	BK	Rear of Engine Near Transmission Bell Housing	2, 5
Cruise Switch No. 1	BK	On Steering Wheel	N/S
Cruise Switch No. 2	BK	On Steering Wheel	N/S
Data Link Connector	BK	Under Lower Driver’s Side of Instrument Panel	23
Diagnostic Junction Port	WT	At Steering Column	24
Driver Blend Door Motor/Actuator (AZC)	BK	On HVAC Housing	N/S
Driver Cylinder Lock Switch	GY	In Driver Door	18
Driver Door Courtesy Lamp	BK	In Driver Door	N/S
Driver Door Lock Motor/Ajar Switch	BK	In Driver Door	18
Driver Door Module C1	WT	In Driver Door	18
Driver Door Module C2	BK	In Driver Door	N/S
Driver Door Module C3	BK	In Driver Door	N/S
Driver Front Power Window Motor	BK	In Driver Door	18
Driver Heated Seat Back	GN	At Driver Seat	N/S
Driver Heated Seat Cushion	BK	At Driver Seat	N/S
Driver Heated Seat Switch	WT	Center of Instrument Panel	22
Driver Lumbar Motor	BK	Under Driver’s Seat	N/S
Driver Lumbar Switch	WT	Center of Instrument Panel	N/S
Driver Power Mirror	BK	At Driver Door	N/S
Driver Power Seat Front Riser Motor	RD	Under Driver’s Seat	N/S

CONNECTOR/GROUND LOCATIONS (Continued)

Connector Name/Number	Color	Location	Fig.
Driver Power Seat Front Riser Motor Sensor	BK	At Driver Seat	N/S
Driver Power Seat Horizontal Motor	BK	At Driver Seat	N/S
Driver Power Seat Horizontal Motor Sensor	BK	At Driver Seat	N/S
Driver Power Seat Rear Riser Motor	RD	At Driver Seat	N/S
Driver Power Seat Rear Riser Motor Sensor	BK	At Driver Seat	N/S
Driver Power Seat Recliner Motor	BK	At Driver Seat	N/S
Driver Power Seat Recliner Motor Sensor	BK	At Driver Seat	N/S
Driver Power Seat Switch	GN	At Driver Seat	N/S
Driver Rear Power Window Motor	BK	In Left Rear Door	19
Driver Rear Power Window Switch	BL	In Left Rear Door	19
Duty Cycle EVAP/Purge Solenoid	BK	Left Front Fender Near Controller Anti-Lock Brake	11
Electronic Speed Control Servo	BK	Right Front of Engine Compartment	10
Engine Coolant Temperature Sensor	BK	Front of Engine	1, 4
Engine Oil Pressure Sensor	BK	Side of Engine	1, 5
Front Power Outlet	RD	Center of Instrument Panel	22
Front Washer Pump	WT	Left Front of Engine Compartment	11
Front Wiper Motor	BK	Left Side of Cowl	11
Fuel Injector No. 1	BK	At Injector	1, 4
Fuel Injector No. 2	BK	At Injector	2, 4
Fuel Injector No. 3	BK	At Injector	1, 4
Fuel Injector No. 4	BK	At Injector	2, 4
Fuel Injector No. 5	BK	At Injector	1, 4
Fuel Injector No. 6	BK	At Injector	2, 4
Fuel Injector No. 7	BK	At Injector	1
Fuel Injector No. 8	BK	At Injector	2
Fuel Pump Module	BK	At Fuel Tank	13
G100 (4.0L)		Near Starter	N/S
G100		Near Battery	N/S
G101		Near Battery	N/S
G102		Right Side of Engine	2
G103		Right Side of Engine	2, 5
G104		Right Rear of Engine	1, 5
G106		Left Side of Engine Compartment	11
G107		Left Side of Engine Compartment	11

CONNECTOR/GROUND LOCATIONS (Continued)

Connector Name/Number	Color	Location	Fig.
G108		Near Power Distribution Center	10
G200		Near Airbag Control Module	22, 23
G201		Near Airbag Control Module	20, 22
G300		Near Right Front Seat	N/S
G301		Near Left Front Seat	13
G-Switch	BK	Under Rear Seat	13
Generator	BK	At Generator	N/S
Glove Box Lamp	BK	Inside Glove Box	22
Hood Ajar Switch	BK	Left Side of Instrument Panel	N/S
Horn No. 1	BK	Right Front Fascia	10
Horn No. 2	BK	Right Front Fascia	10
Idle Air Control Motor	BK	Left Side of Engine Near Throttle Body	1, 4
Ignition Switch C1	WT	On Steering Column	24
Ignition Switch C2	BK	On Steering Column	24
Input Speed Sensor	BK	Left Side of Transmission	3
Instrument Cluster	WT	Behind Cluster	22
Intake Air Temperature Sensor	GY	Left Side of Engine	1, 4
Junction Block C1	BK	At Junction Block	13, 14, 15
Junction Block C2	BK	At Junction Block	15
Junction Block C3	BK	At Junction Block	21, 23
Junction Block C4	WT	At Junction Block	14, 15
Junction Block C5	WT	At Junction Block	15
Leak Detection Pump		Left Front Wheel Opening	11
Left Courtesy Lamp	BK	Left Side of Instrument Panel	24
Left Fog Lamp	BK	Left Front Fascia	11
Left Front Door Speaker	WT	In Left Front Door	18
Left Front Park Lamp	WT	At Lamp	N/S
Left Front Park/Turn Signal Lamp	BK	At Lamp	N/S
Left Front Side Marker Lamp	WT	At Lamp	N/S
Left Front Wheel Speed Sensor	GY	At Left Front Wheel Opening	N/S
Left Handle Courtesy Lamp	BK	At Lamp	N/S
Left High Beam Headlamp	BK	At Lamp	N/S
Left Instrument Panel Speaker	WT	At Speaker	22
Left Liftgate Ajar Switch	BK	In Liftgate	16
Left Low Beam Headlamp	GY	At Lamp	N/S
Left Multi-Function Switch	WT	On Steering Column	24
Left Rear Door Lock Motor/Ajar Switch	BK	In Left Rear Door	19
Left Rear Door Speaker		In Left Rear Door	19
Left Rear Lamp Assembly		At Lamp Assembly	25
Left Rear Wheel Speed Sensor	GY	Near Left Rear Wheel	13
Left Visor/Vanity Lamp	BK	At Visor	N/S

CONNECTOR/GROUND LOCATIONS (Continued)

Connector Name/Number	Color	Location	Fig.
License Lamp No. 1	BK	At Lamp	N/S
License Lamp No. 2	BK	At Lamp	N/S
Liftgate Flip-up Ajar Switch	GY	In Liftgate	16
Liftgate Flip-up Push Button Switch	BK	In Liftgate	N/S
Liftgate Flip-up Release Solenoid	BK	In Liftgate	16
Liftgate Lock Motor	BK	In Liftgate	16
Manifold Absolute Pressure Sensor (4.0)	BK	At Throttle Body	4
Manifold Absolute Pressure Sensor (4.7)		Right Side of Engine	1
Manual Temperature Control C1 (MTC)	WT	Center of Instrument Panel	22
Manual Temperature Control C2 (MTC)	WT	Center of Instrument Panel	22
Mode Door Motor/Actuator (AZC)	BK	Right Center of Instrument Panel	N/S
Output Speed Sensor (4.0L)	GY	Left Side of Transmission	6
Output Speed Sensor (4.7L)	BK	Left Side of Transmission	3
Overhead Map/Courtesy Lamp No.1		At Overhead Console	N/S
Overhead Map/Courtesy Lamp Switch No.1	BK	At Overhead Console	N/S
Overhead Map/Courtesy Lamp No.2		At Overhead Console	N/S
Overhead Map/Courtesy Lamp Switch No.2	BK	At Overhead Console	N/S
Oxygen Sensor 1/1 Upstream (4.0L)	GY	Left Side of Engine Before Front Catalytic Converter	7
Oxygen Sensor 1/1 Upstream (4.7L)	GY	Left Side of Engine at Exhaust	8
Oxygen Sensor 1/2 Downstream (4.0L)	GY	Left Side of Engine After Front Catalytic Converter	7
Oxygen Sensor 1/2 Downstream (4.7L)	GY	After Left Front Catalytic Converter	8
Oxygen Sensor 2/1 Upstream (4.0L)	GY	Left Side of Engine Before Rear Catalytic Converter	7
Oxygen Sensor 2/1 Upstream (4.7L)	GY	Right Side of Engine Before Right Front Catalytic Converter	8
Oxygen Sensor 2/2 Downstream (4.0L)	BK	Left Side of Engine After Rear Catalytic Converter	7
Oxygen Sensor 2/2 Downstream (4.7L)	GY	Right Side of Engine After Right Front Catalytic Converter	8
Park/Neutral Position Switch	BK	Left Side of Transmission	6
Passenger Airbag	YL	Passenger Side of Instrument Panel	22

CONNECTOR/GROUND LOCATIONS (Continued)

Connector Name/Number	Color	Location	Fig.
Passenger Blend Door Motor/ Actuator (AZC)	BK	Passenger Side of Instrument Panel	N/S
Passenger Door Courtesy Lamps	BK	In Passenger Door	N/S
Passenger Door Lock Motor/Ajar Switch	BK	In Passenger Door	N/S
Passenger Door Module C1	WT	In Passenger Door	N/S
Passenger Door Module C2	BK	In Passenger Door	N/S
Passenger Front Power Window Motor	BK	In Passenger Door	N/S
Passenger Heated Seat Back	BK	At Passenger Seat	N/S
Passenger Heated Seat Cushion	BK	At Passenger Seat	N/S
Passenger Heated Seat Switch	BK	Center of Instrument Panel	N/S
Passenger Lumbar Motor	BK	At Passenger Seat	N/S
Passenger Lumbar Switch	WT	At Passenger Seat	N/S
Passenger Power Mirror	BK	In Passenger Door	N/S
Passenger Power Seat Front Riser Motor	RD	At Passenger Seat	N/S
Passenger Power Seat Horizontal Motor	RD	At Passenger Seat	N/S
Passenger Power Seat Rear Riser Motor	RD	At Passenger Seat	N/S
Passenger Power Seat Recliner Motor	BK	At Passenger Seat	N/S
Passenger Power Seat Switch	GN	At Passenger Seat	N/S
Passenger Rear Power Window Motor	BK	In Right Rear Door	N/S
Passenger Rear Power Window Switch	BL	In Right Rear Door	N/S
Power Amplifier C1	WT	Under Rear Seat	12
Power Amplifier C2	WT	Under Rear Seat	12
Power Connector	WT	Center of Instrument Panel	23
Power Steering Pressure Switch		Near Power Steering Reservoir	1
Powertrain Control Module C1	BK	Rear of Engine Compartment	2, 5, 9
Powertrain Control Module C2	WT	Rear of Engine Compartment	2, 5, 9
Powertrain Control Module C3	GY	Rear of Engine Compartment	N/S
Pressure Transducer (4.7L)	BK	Right Side of Transmission	N/S
Radiator Fan Motor	BK	At Radiator	10
Radiator Fan Relay	BK	Right Front Engine Compartment	10
Radio C1	GY	Center of Instrument Panel	22
Radio C2	BK	Center of Instrument Panel	22
Radio C3	WT	Center of Instrument Panel	22
Radio C4	BK	Center of Instrument Panel	22
Rear Power Outlet	RD	Right Rear Quarter Panel	25
Rear Washer Pump	BK	Left Front of Engine Compartment	11

CONNECTOR/GROUND LOCATIONS (Continued)

Connector Name/Number	Color	Location	Fig.
Rear Window Defogger	BK	Right Upper Corner of Liftgate	16
Rear Wiper Motor	BK	In Liftgate	16
Recirculation Door Motor/Actuator (AZC)	BK	Center of Instrument Panel	N/S
Remote Radio Switch No.1	BK	At Switch in Steering Wheel	N/S
Remote Radio Switch No.2	BK	At Switch in Steering Wheel	N/S
Right Courtesy Lamp	BK	At Lamp	23
Right Fog Lamp	BK	At Right Front Fascia	10
Right Front Door Speaker	WT	In Right Front Door	N/S
Right Front Park Lamp	WT	At Lamp	N/S
Right Front Park/Turn Signal Lamp	BK	At Lamp	N/S
Right Front Side Marker Lamp	WT	At Lamp	N/S
Right Front Wheel Speed Sensor	GY	In Right Front Wheel Opening	N/S
Right Handle Courtesy Lamp	BK	At Lamp	N/S
Right High Beam Headlamp	BK	At Lamp	N/S
Right Instrument Panel Speaker	WT	At Speaker	22
Right Liftgate Ajar Switch	BK	In Liftgate	16
Right Low Beam Headlamp	GY	At Lamp	N/S
Right Multi-Function Switch	WT	On Steering Column	24
Right Rear Door Lock Motor/Ajar Switch	BK	In Right Rear Door	N/S
Right Rear Door Speaker	WT	In Right Rear Door	N/S
Right Rear Lamp Assembly	BK	At Lamp Assembly	25
Right Rear Wheel Speed Sensor	BK	Near Right Rear Wheel	13
Right Visor/Vanity Lamp	BK	At Visor	N/S
Seat Belt Switch	WT	At Driver Seat	N/S
Seat Module C1	BK	Under Seat	N/S
Seat Module C2	OR	Under Seat	N/S
Sentry Key Immobilizer Module	BK	On Steering Column	24
Sunroof Control Module		At Sunroof	26
Sunroof Motor	WT	At Sunroof	N/S
Sunroof Motor Position Sensor	BK	At Sunroof	N/S
Sunroof Switch		Center of Headliner, Above Rear View Mirror	N/S
Temperature Valve Actuator (MTC)	BK	On HVAC Housing	N/S
Throttle Position Sensor (4.0L)	WT	Left Side of Engine	4
Throttle Position Sensor (4.7L)	WT	Left Side of Engine	1
Trailer Tow Brake Lamp Relay	BK	Left Quarter Panel	N/S
Trailer Tow Circuit Breaker	BK	Left Quarter Panel	N/S
Trailer Tow Connector	BK	In Rear Bumper	17
Trailer Tow Left Turn Relay	BK	Left Quarter Panel	N/S

CONNECTOR/GROUND LOCATIONS (Continued)

Connector Name/Number	Color	Location	Fig.
Trailer Tow Right Turn Relay	BK	Left Quarter Panel	N/S
Transfer Case Switch		On Transfer Case	N/S
Transmission Control Module	BK	Rear of Engine Compartment	2, 9
Transmission Solenoid/TRS Assembly	GY	Left Side of Transmission	3
Transmission Solenoid	BK	Left Side of Transmission	6
Underhood Lamp	BK	At Lamp	27
Vehicle Information Center	BK	In Overhead Console	N/S
Washer Fluid Level Switch	GY	Left Front of Engine Compartment	11

CONNECTOR/GROUND LOCATIONS (Continued)

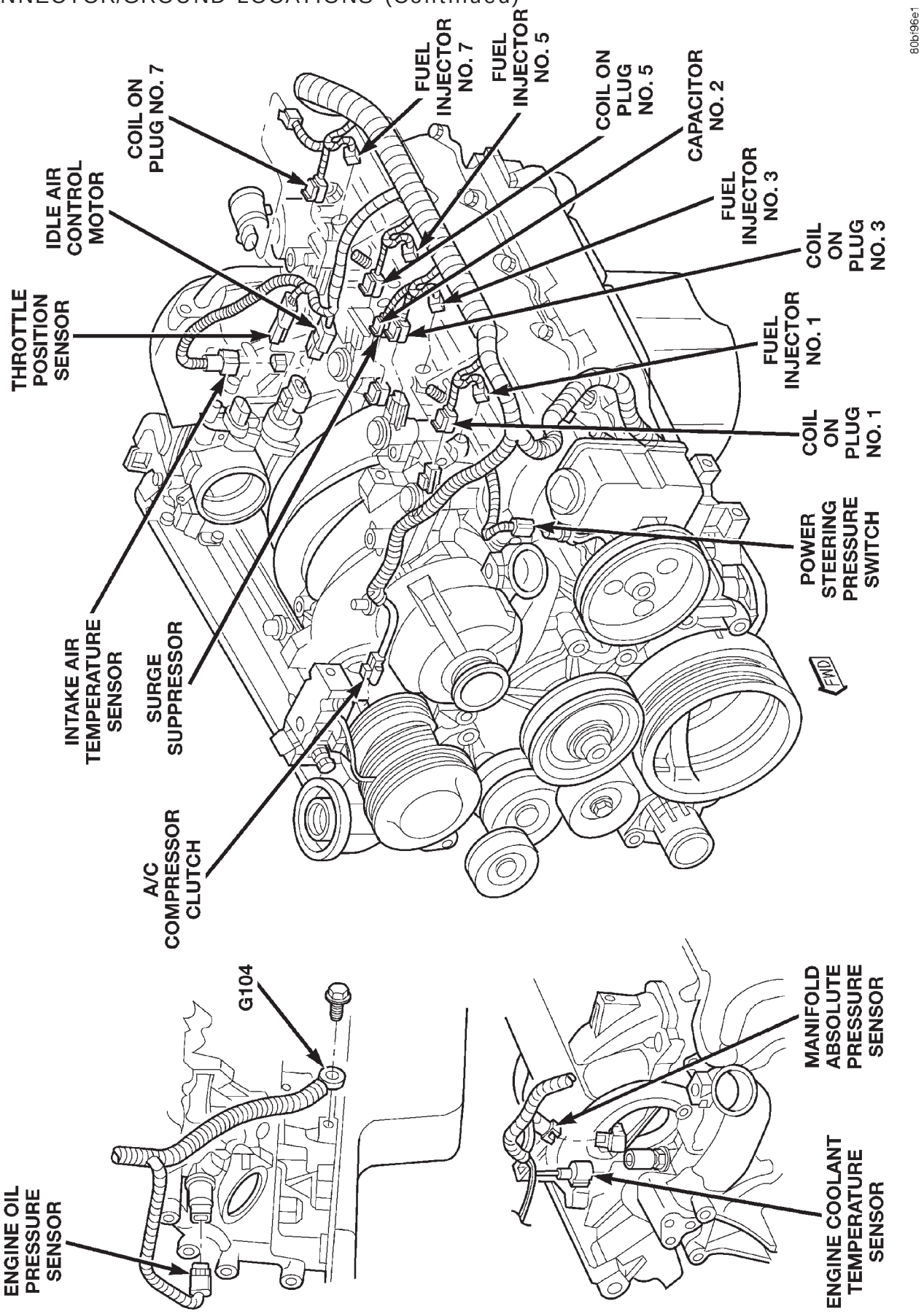

Fig. 1 Left Side Engine Connectors (4.7L)

CONNECTOR/GROUND LOCATIONS (Continued)

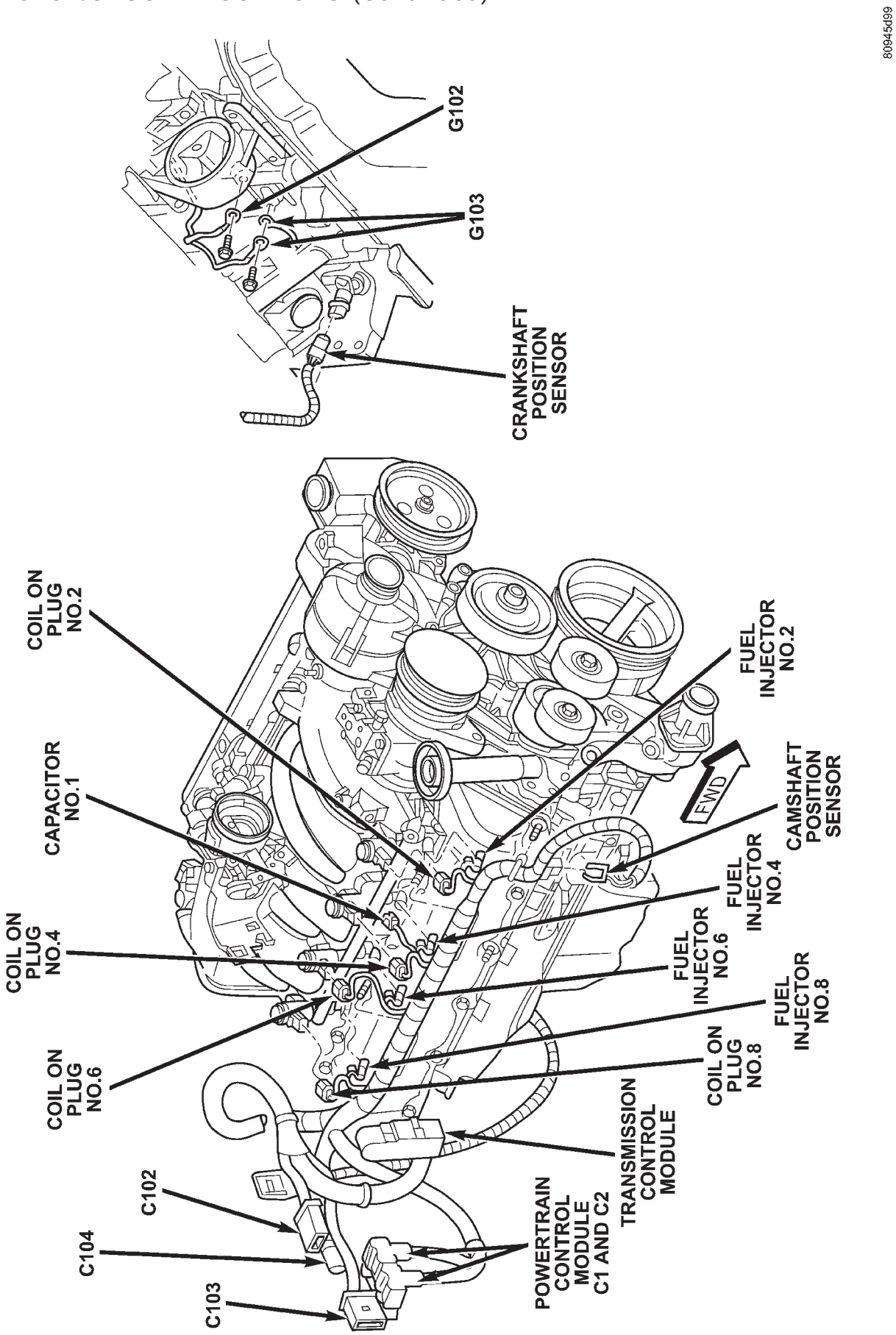

Fig. 2 Right Side Engine Connectors (4.7L)

CONNECTOR/GROUND LOCATIONS (Continued)

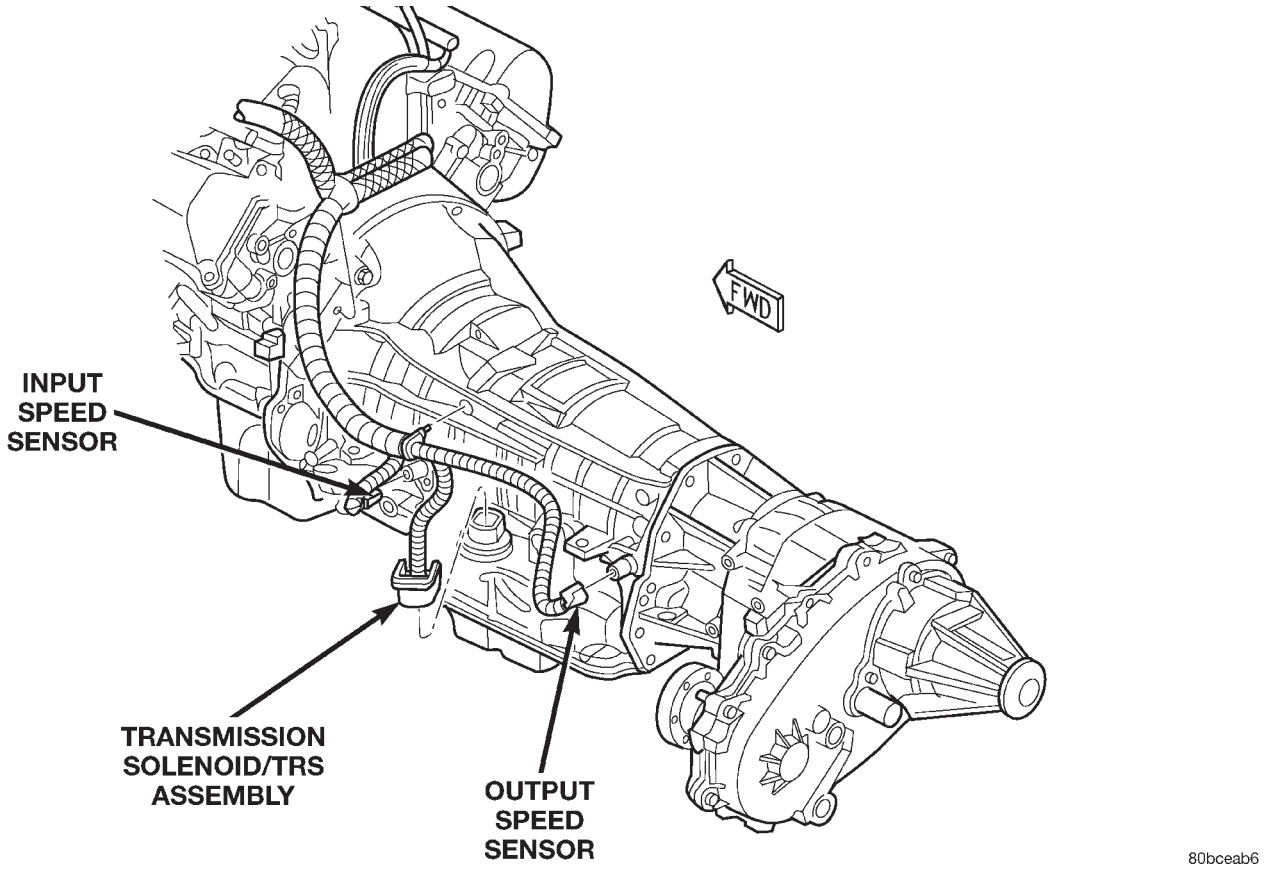

Fig. 3 Transmission Connectors (4.7L)

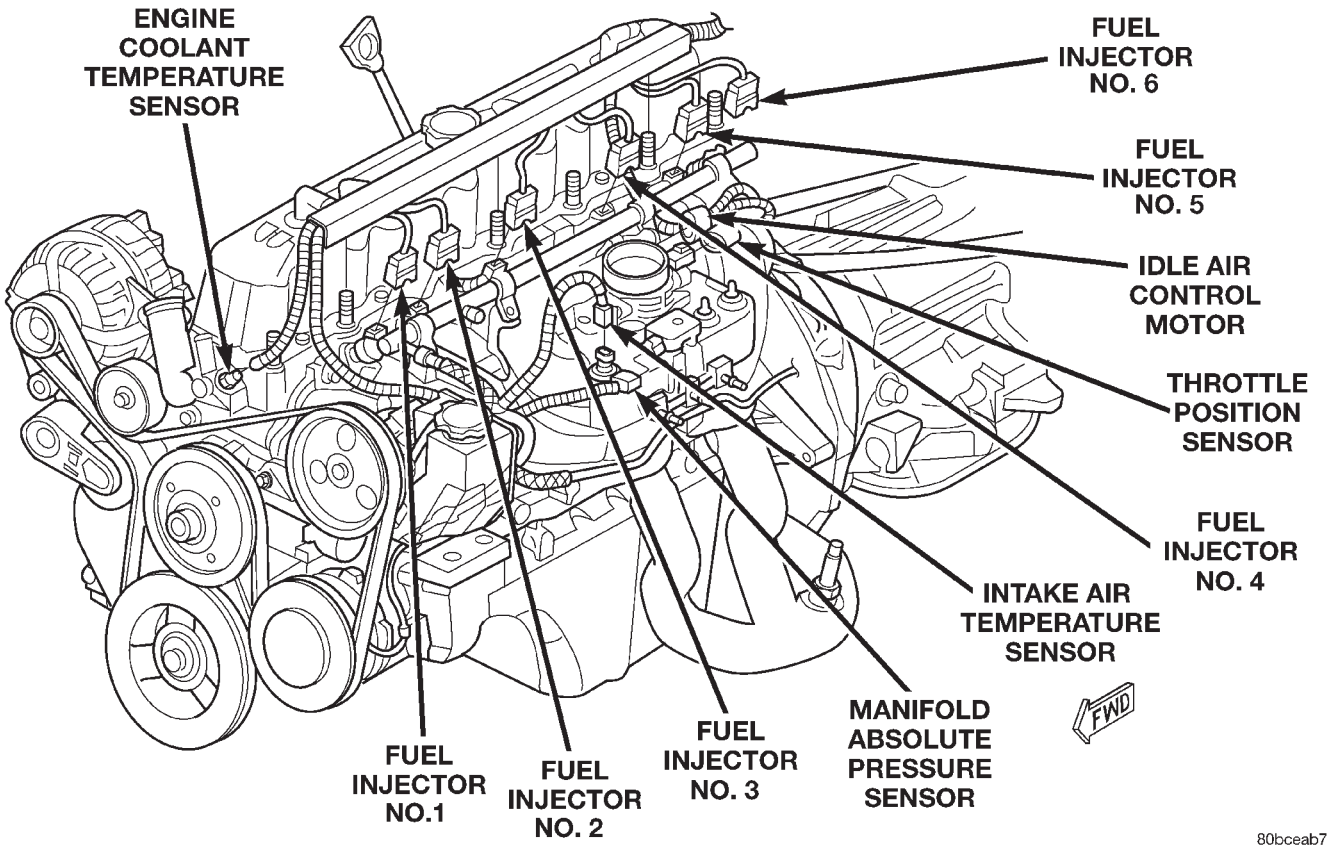

Fig. 4 Engine Connectors (4.0L)

CONNECTOR/GROUND LOCATIONS (Continued)

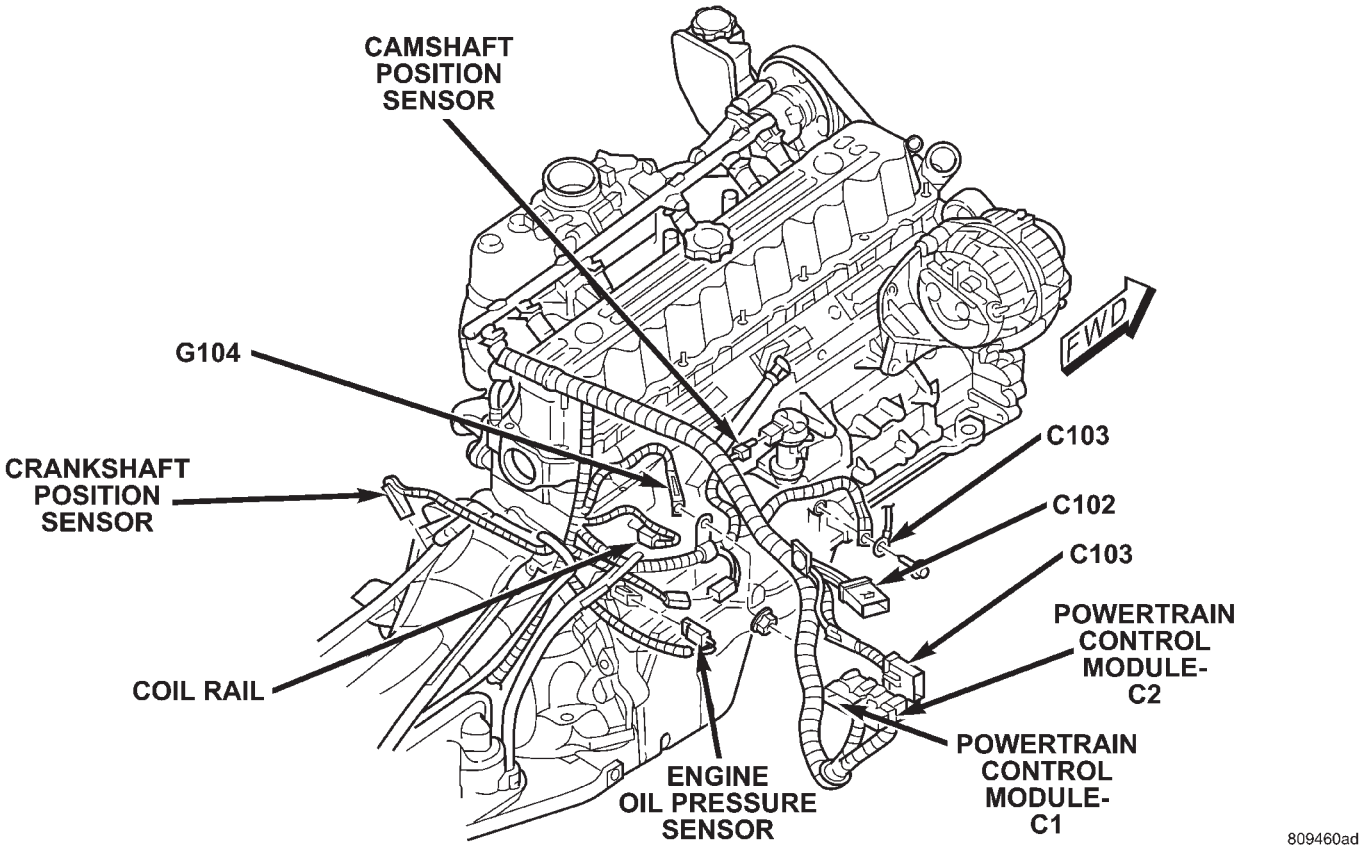

Fig. 5 Engine Connectors (4.0L)

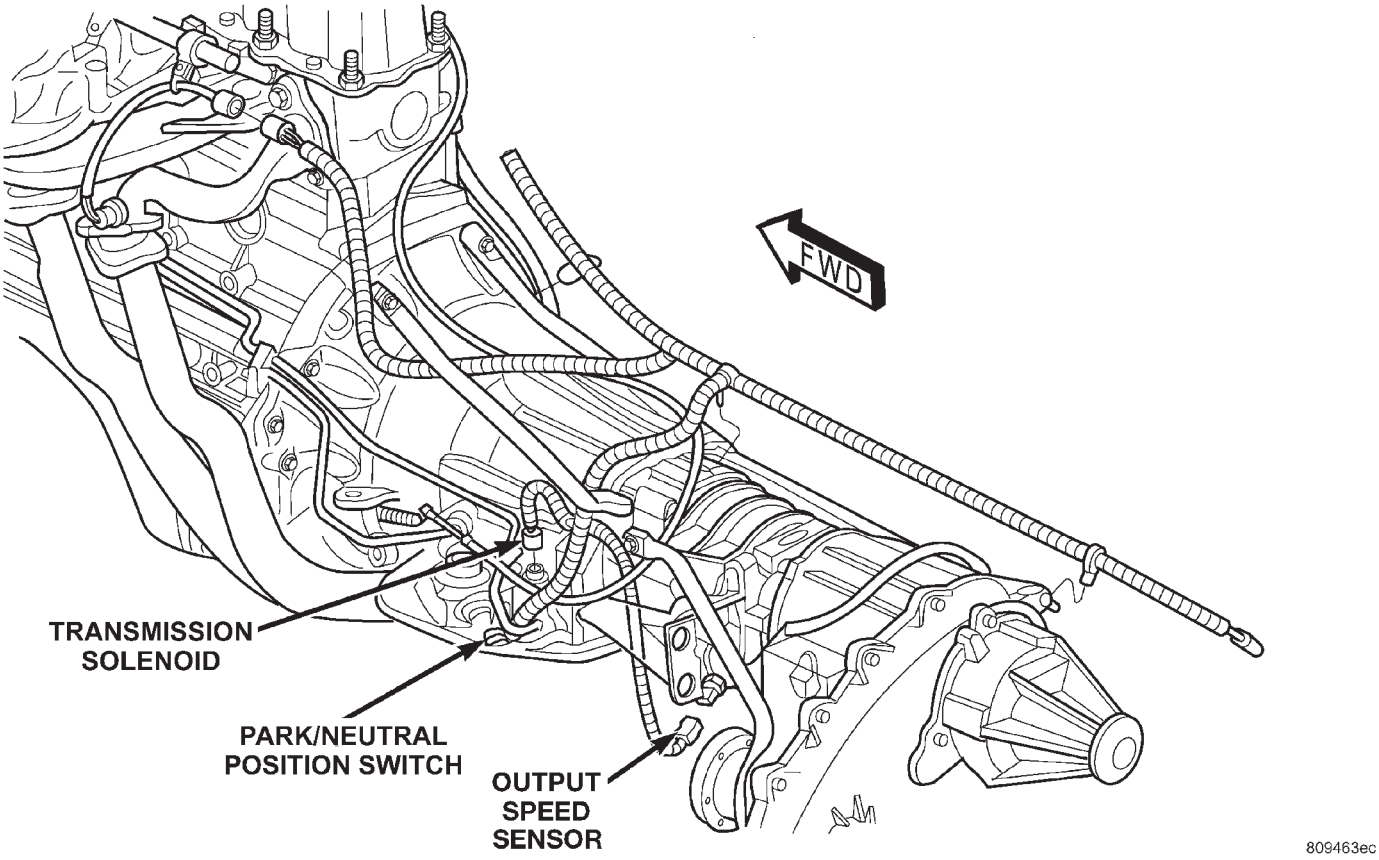

Fig. 6 Transmission Connectors (4.0L)

CONNECTOR/GROUND LOCATIONS (Continued)

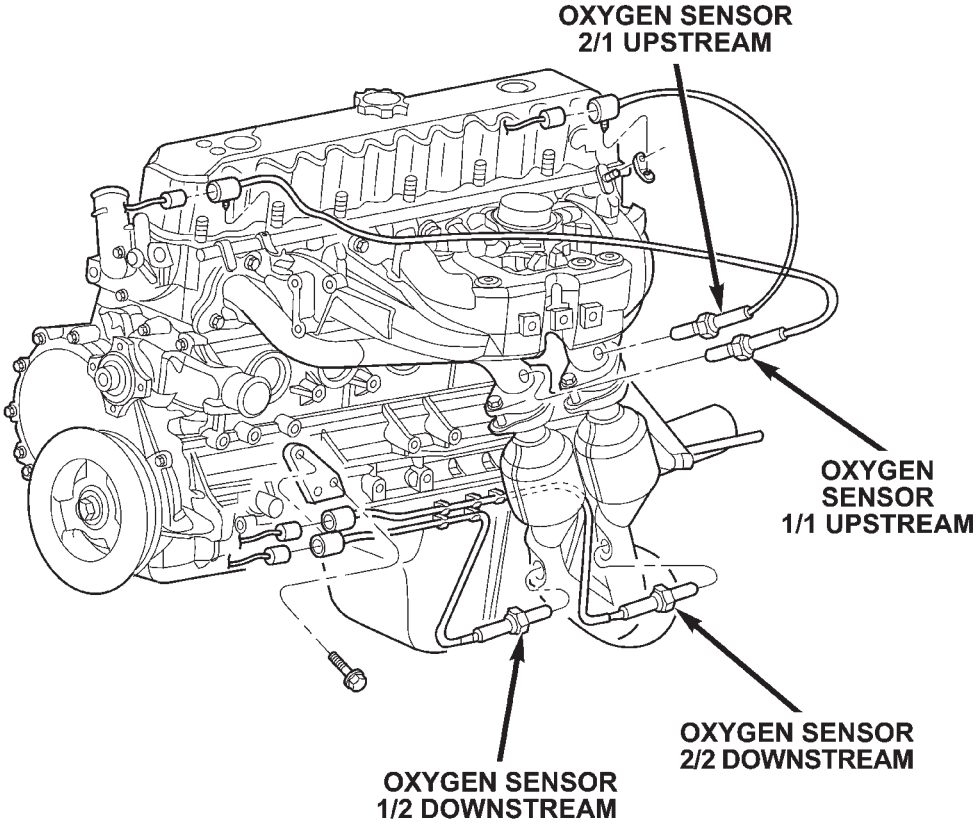

Fig. 7 Oxygen Sensor Connectors (4.0L)

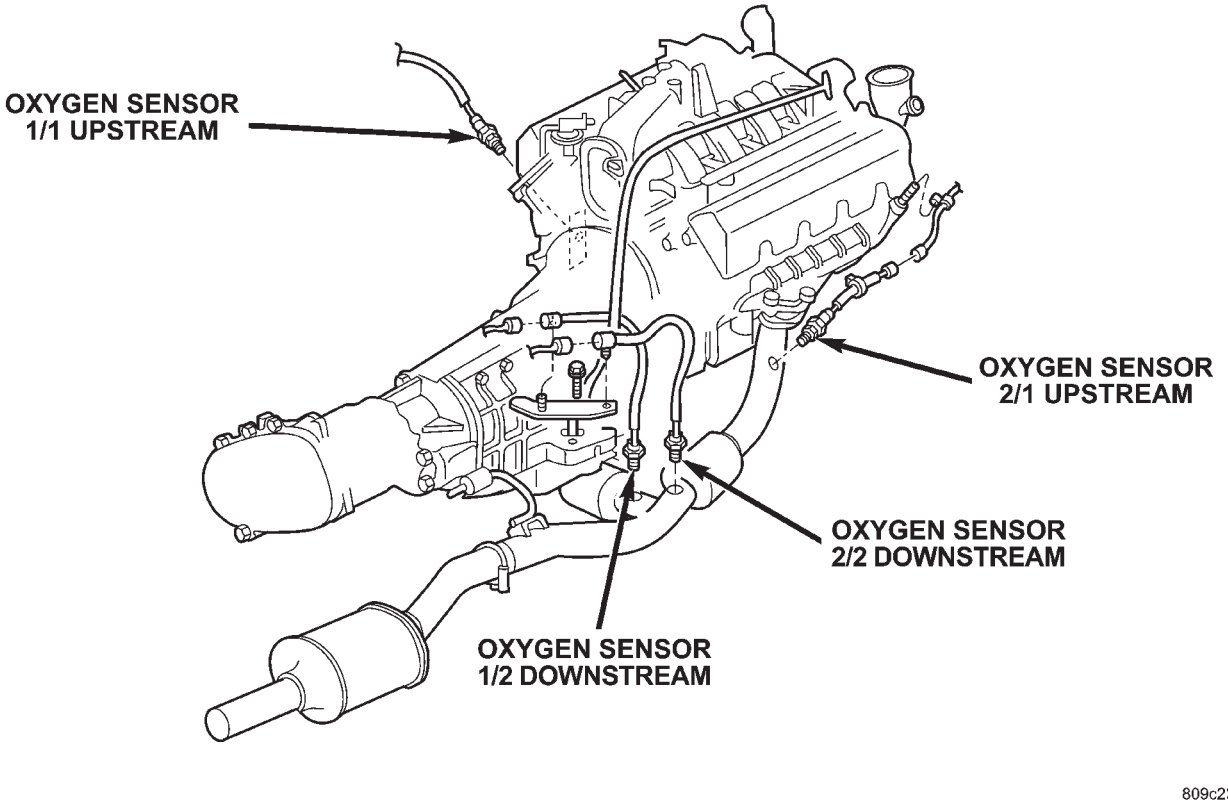

Fig. 8 Oxygen Sensor Connectors (4.7L)

CONNECTOR/GROUND LOCATIONS (Continued)

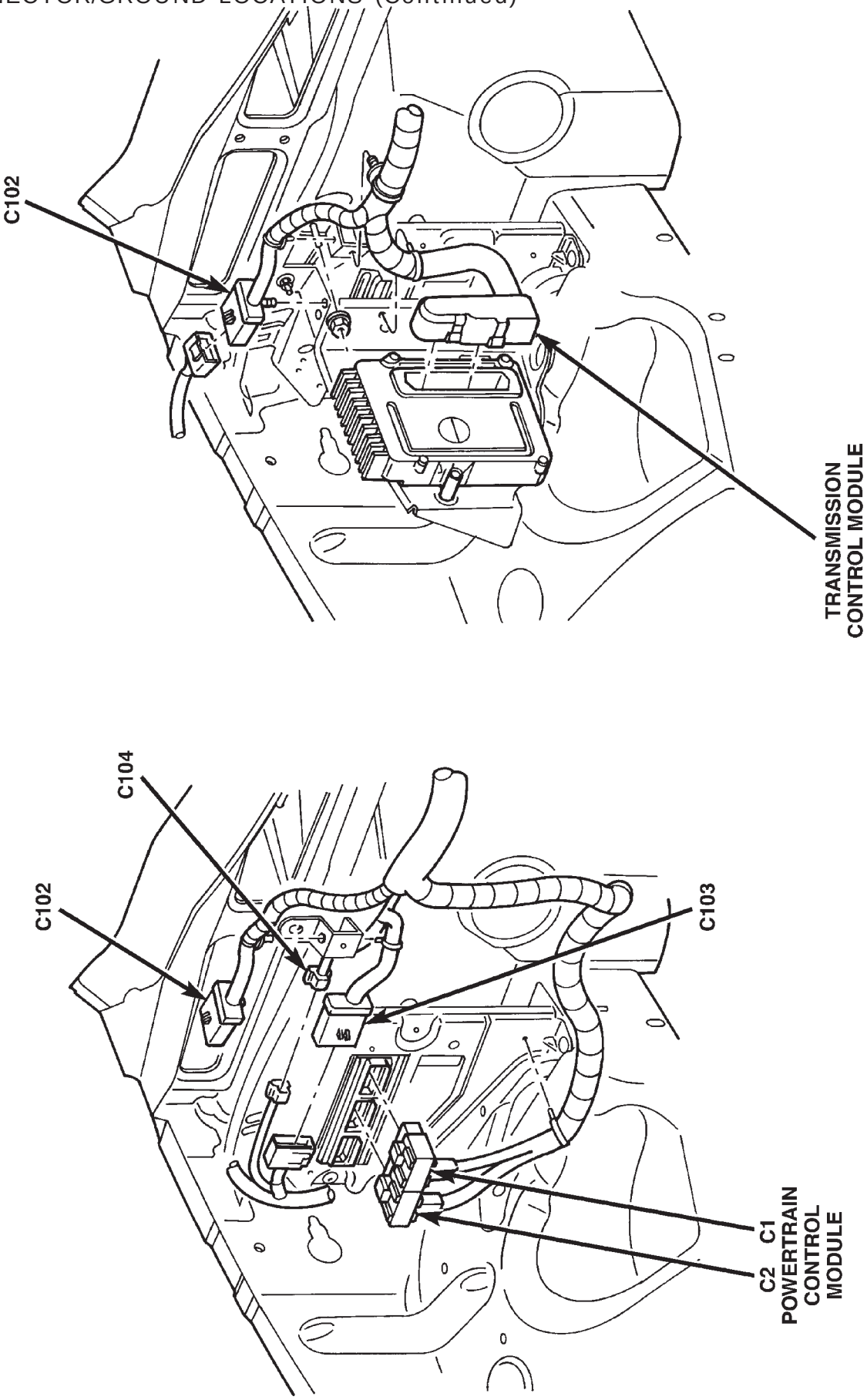

Fig. 9 Right Rear Engine Compartment

CONNECTOR/GROUND LOCATIONS (Continued)

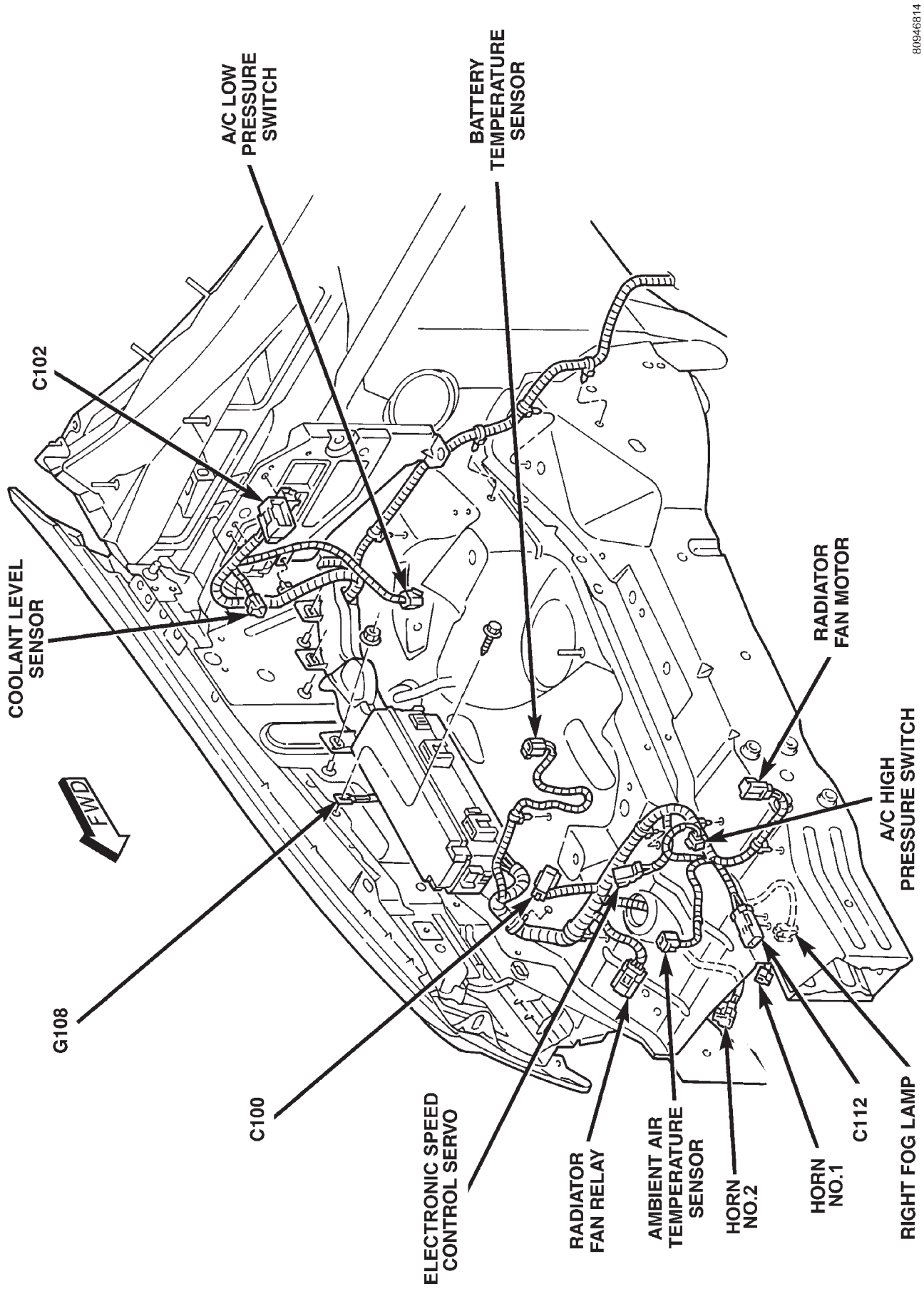

Fig. 10 Right Headlamp and Dash Connectors

CONNECTOR/GROUND LOCATIONS (Continued)

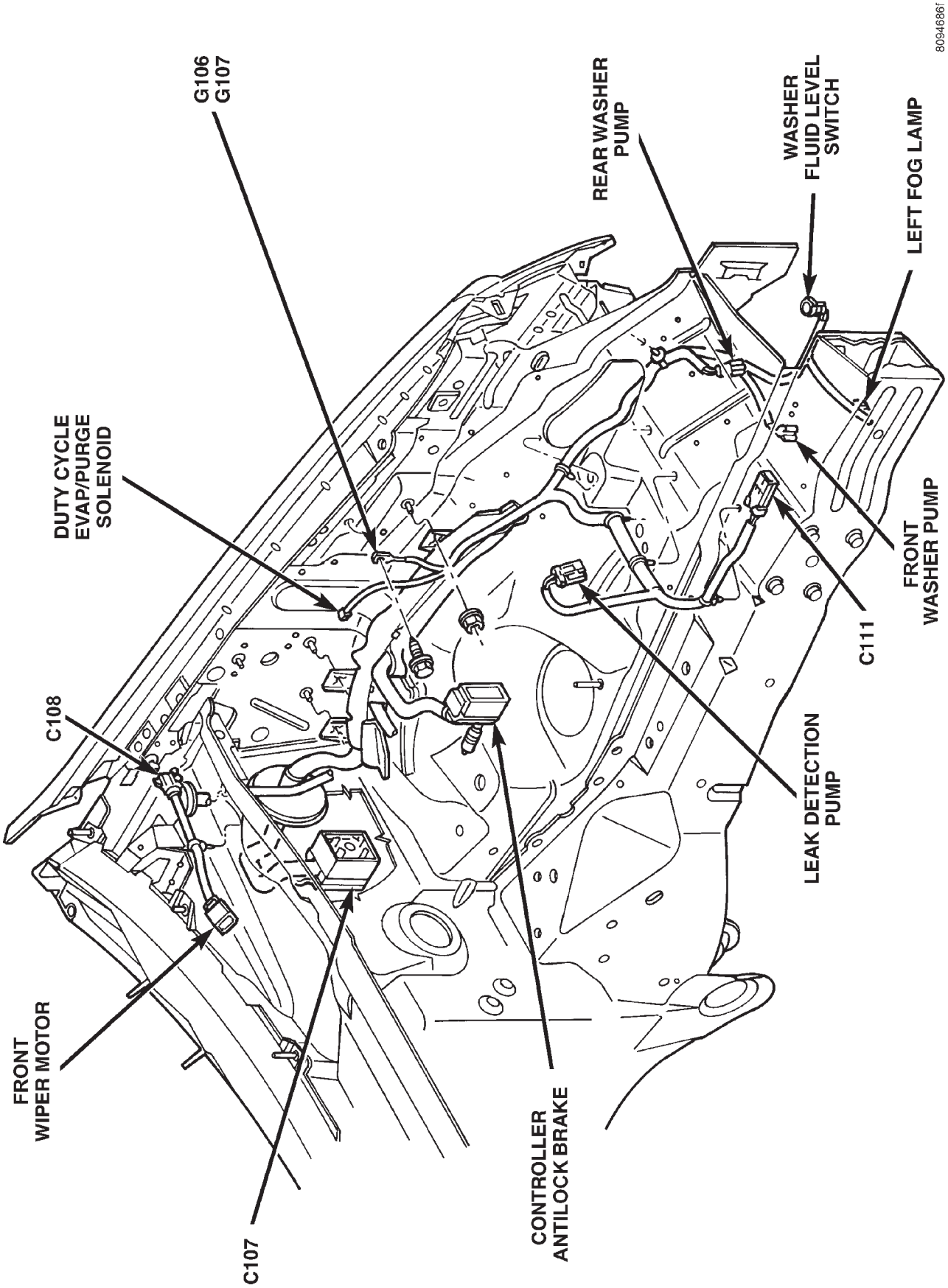

Fig. 11 Left Headlamp and Dash Connectors

CONNECTOR/GROUND LOCATIONS (Continued)

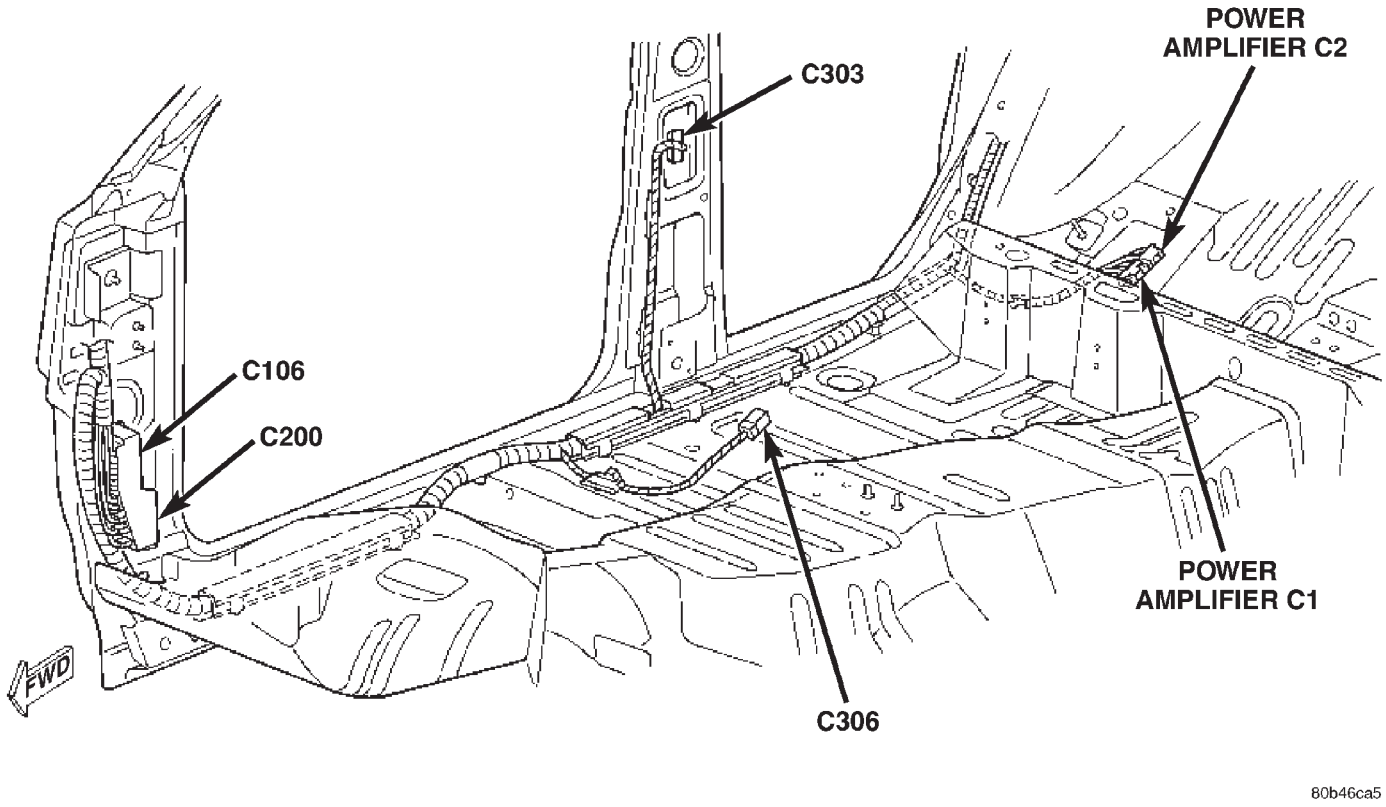

Fig. 12 Right Side Body Connectors

CONNECTOR/GROUND LOCATIONS (Continued)

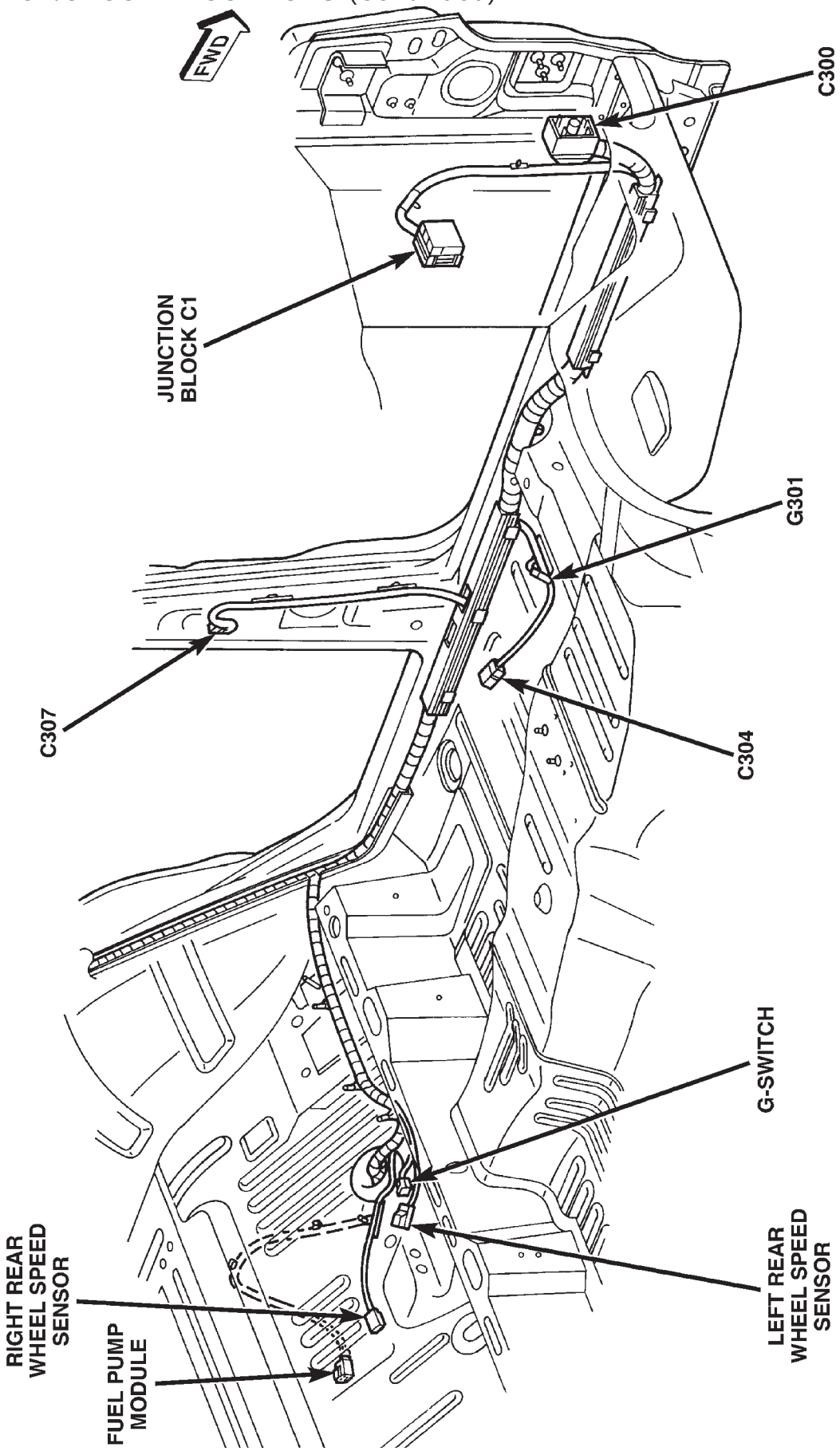

Fig. 13 Left Side Body Connectors

CONNECTOR/GROUND LOCATIONS (Continued)

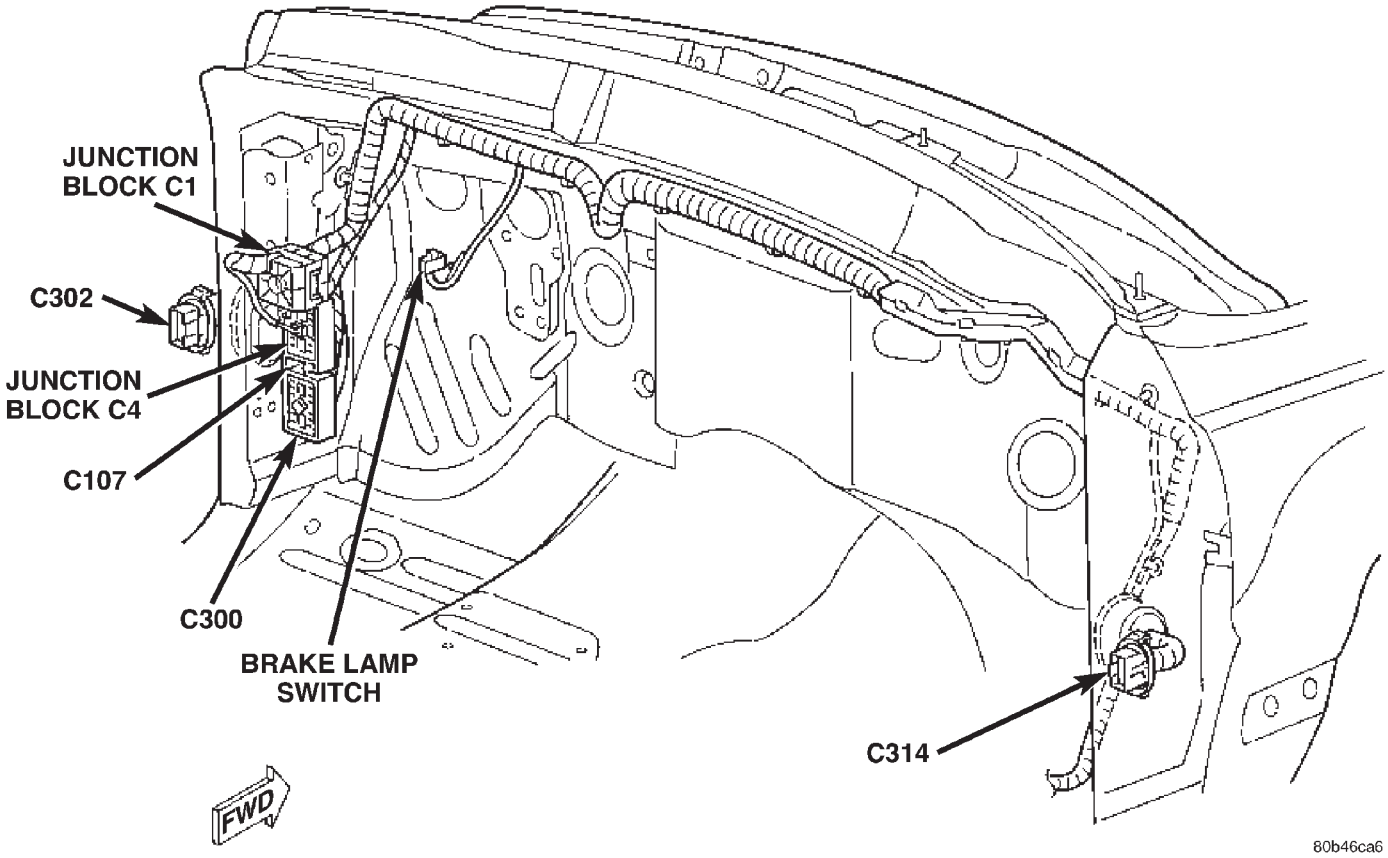

Fig. 14 Front Body Connectors

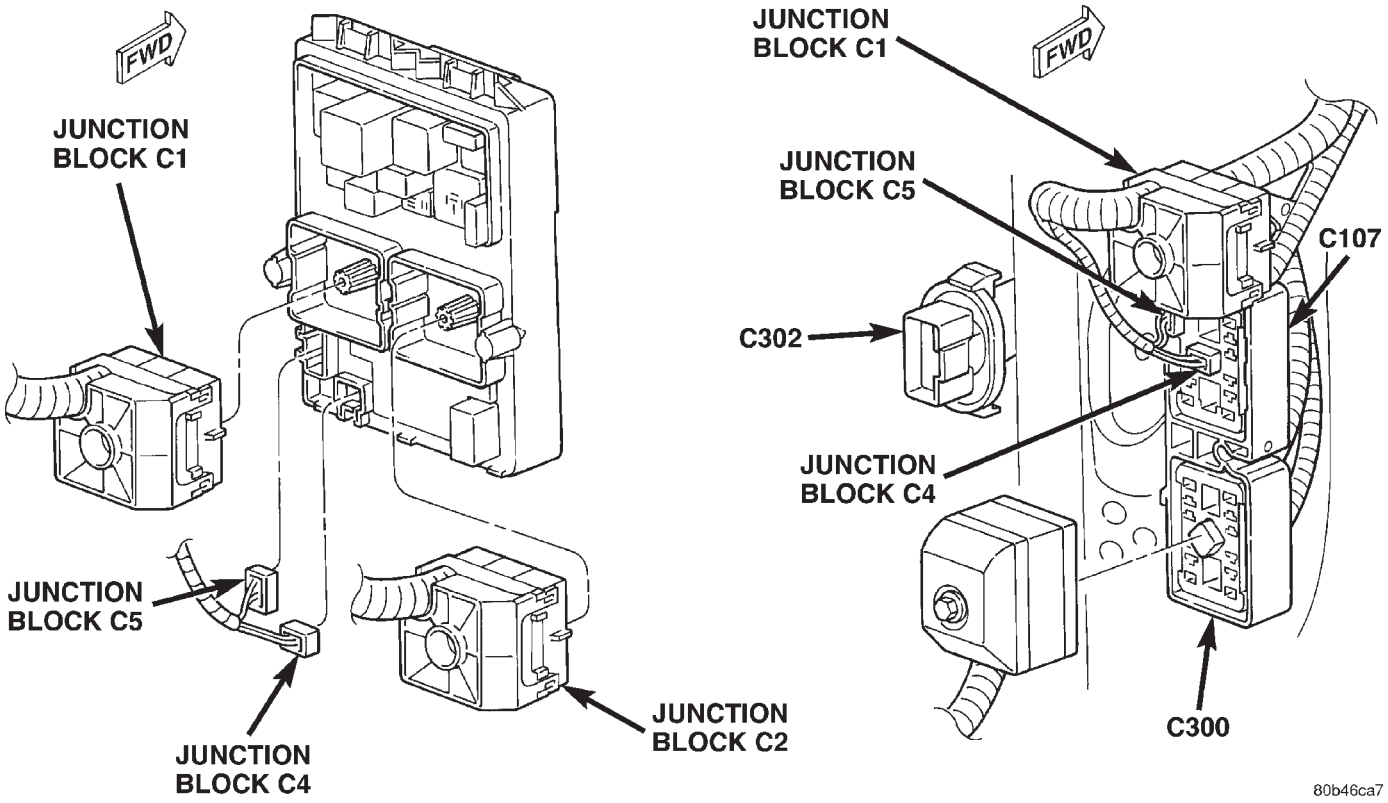

Fig. 15 Junction Block

CONNECTOR/GROUND LOCATIONS (Continued)

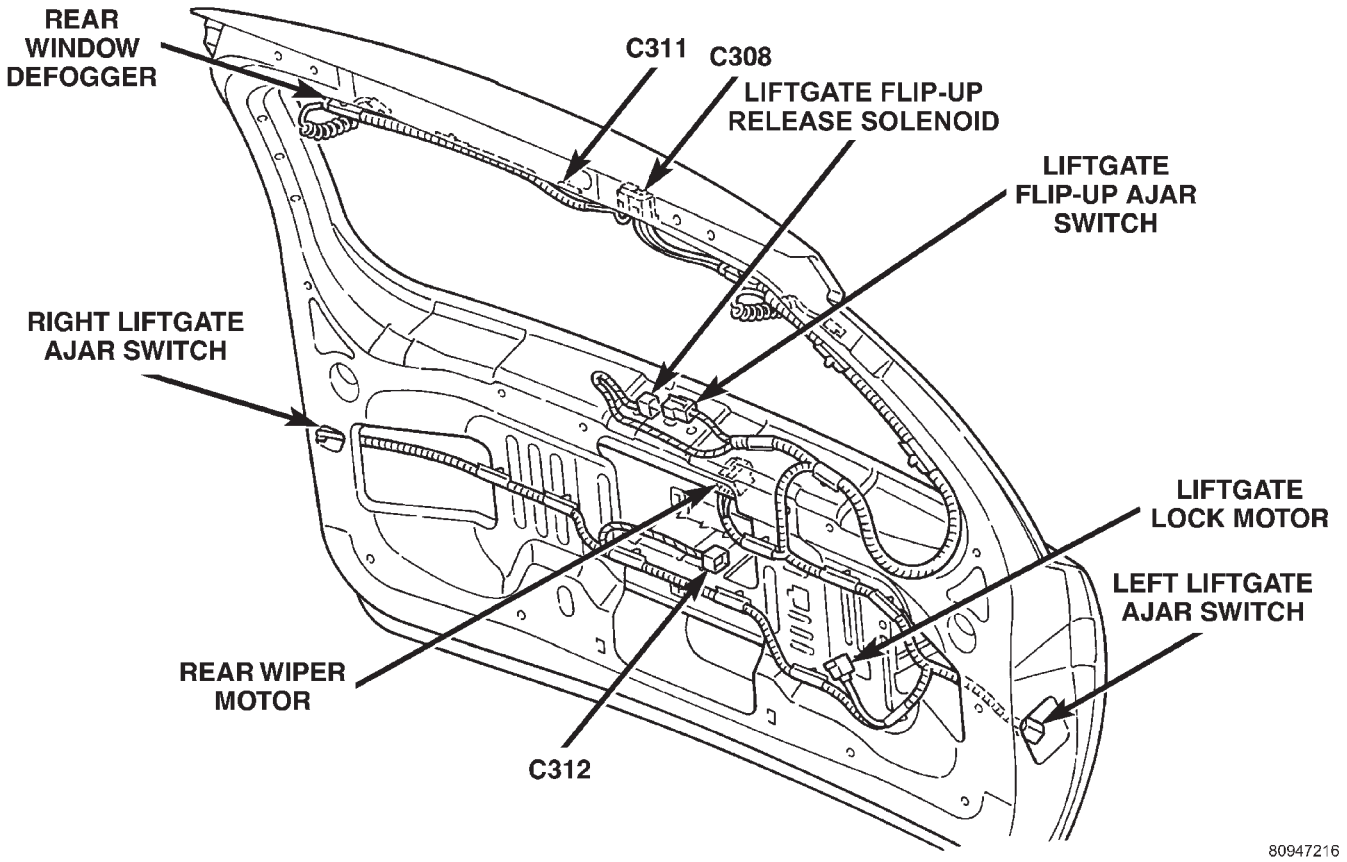

Fig. 16 Liftgate Connectors

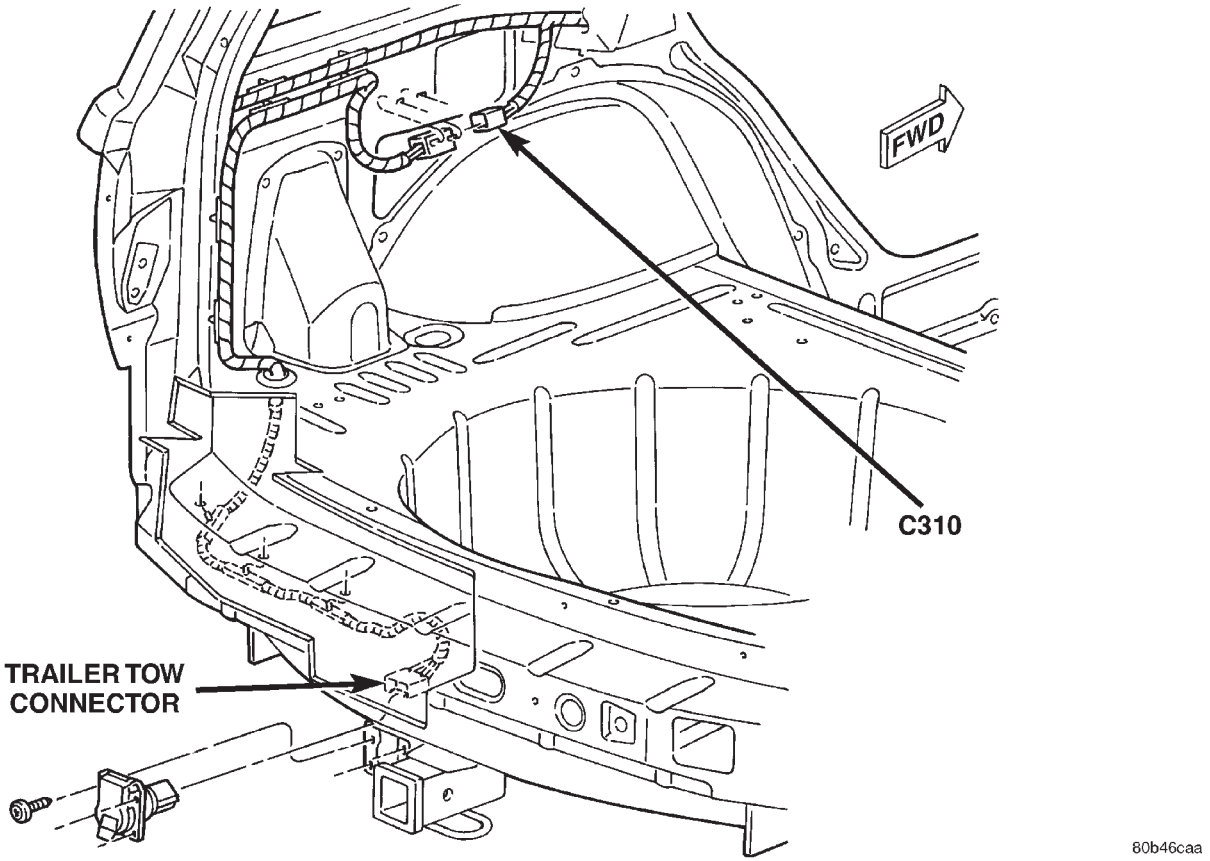

Fig. 17 Trailer Tow Connectors

CONNECTOR/GROUND LOCATIONS (Continued)

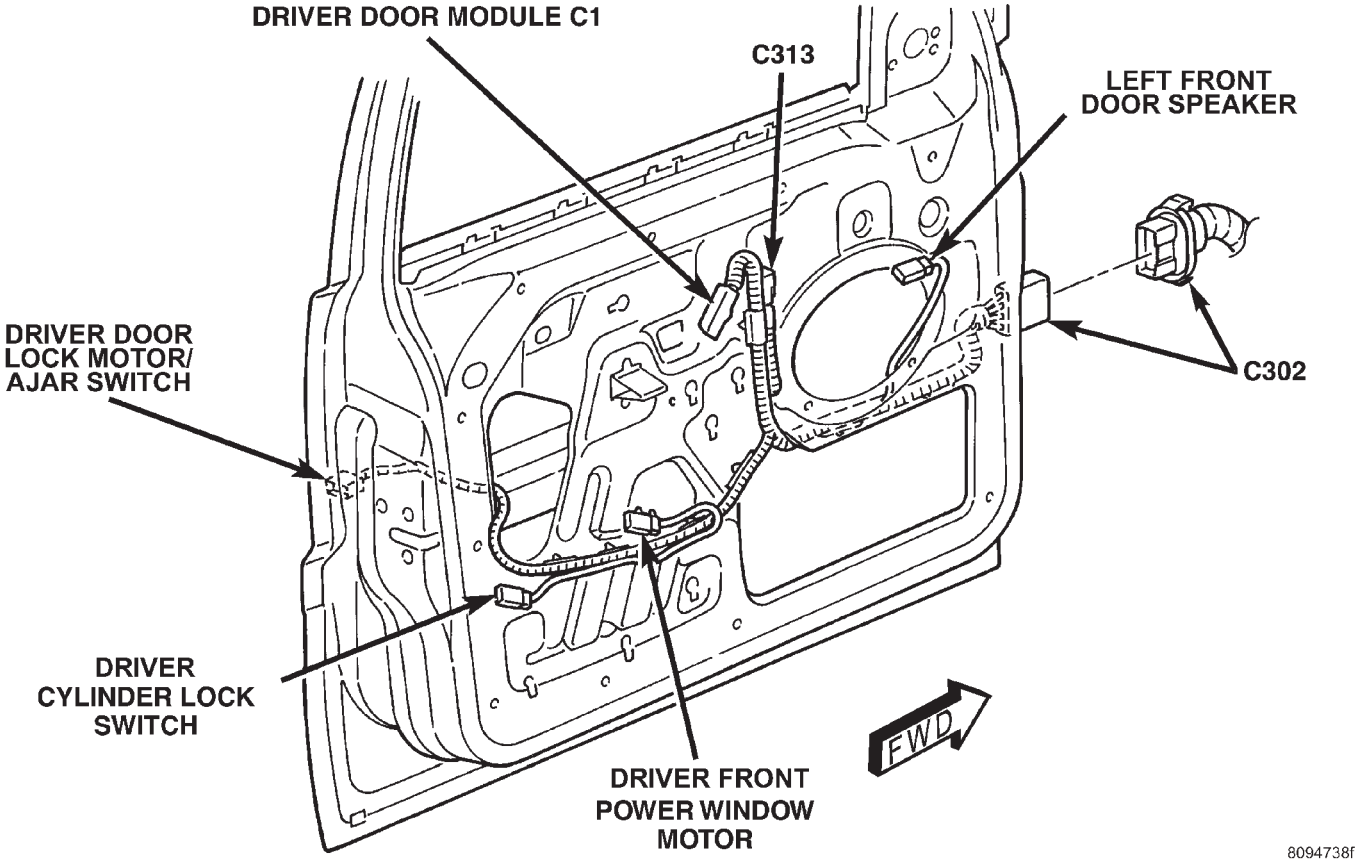

Fig. 18 Driver Door Connectors

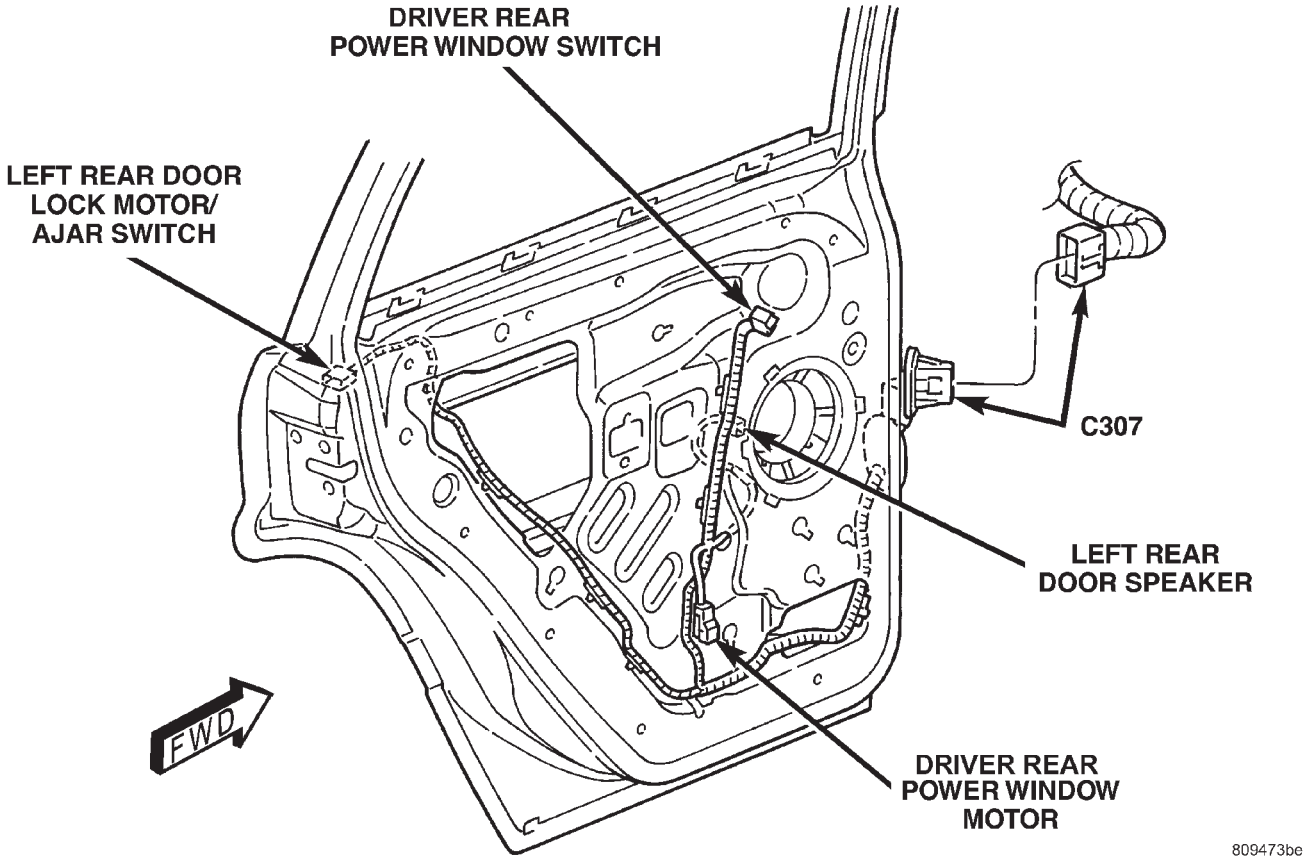

Fig. 19 Left Rear Door Connectors

CONNECTOR/GROUND LOCATIONS (Continued)

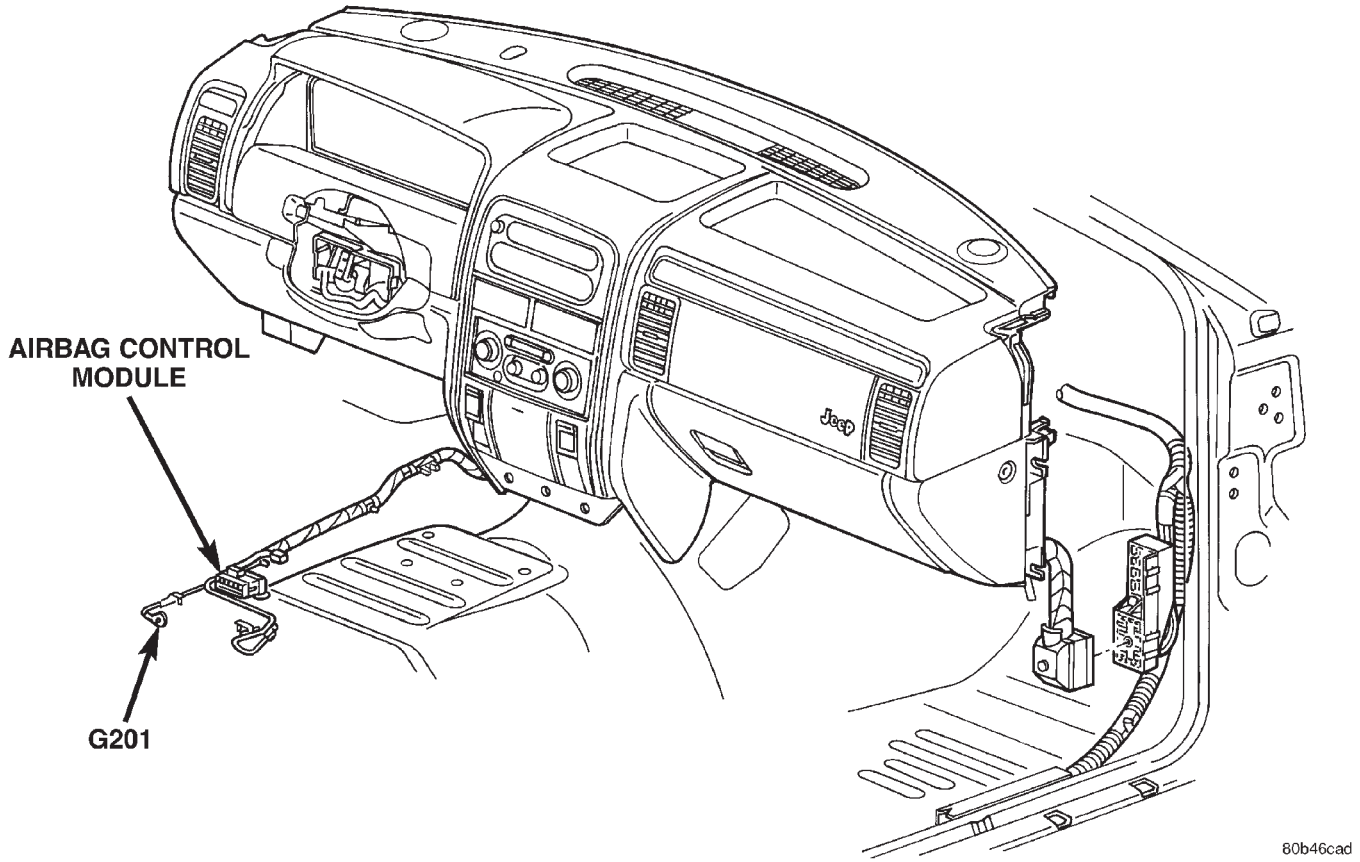

Fig. 20 Instrument Panel Front

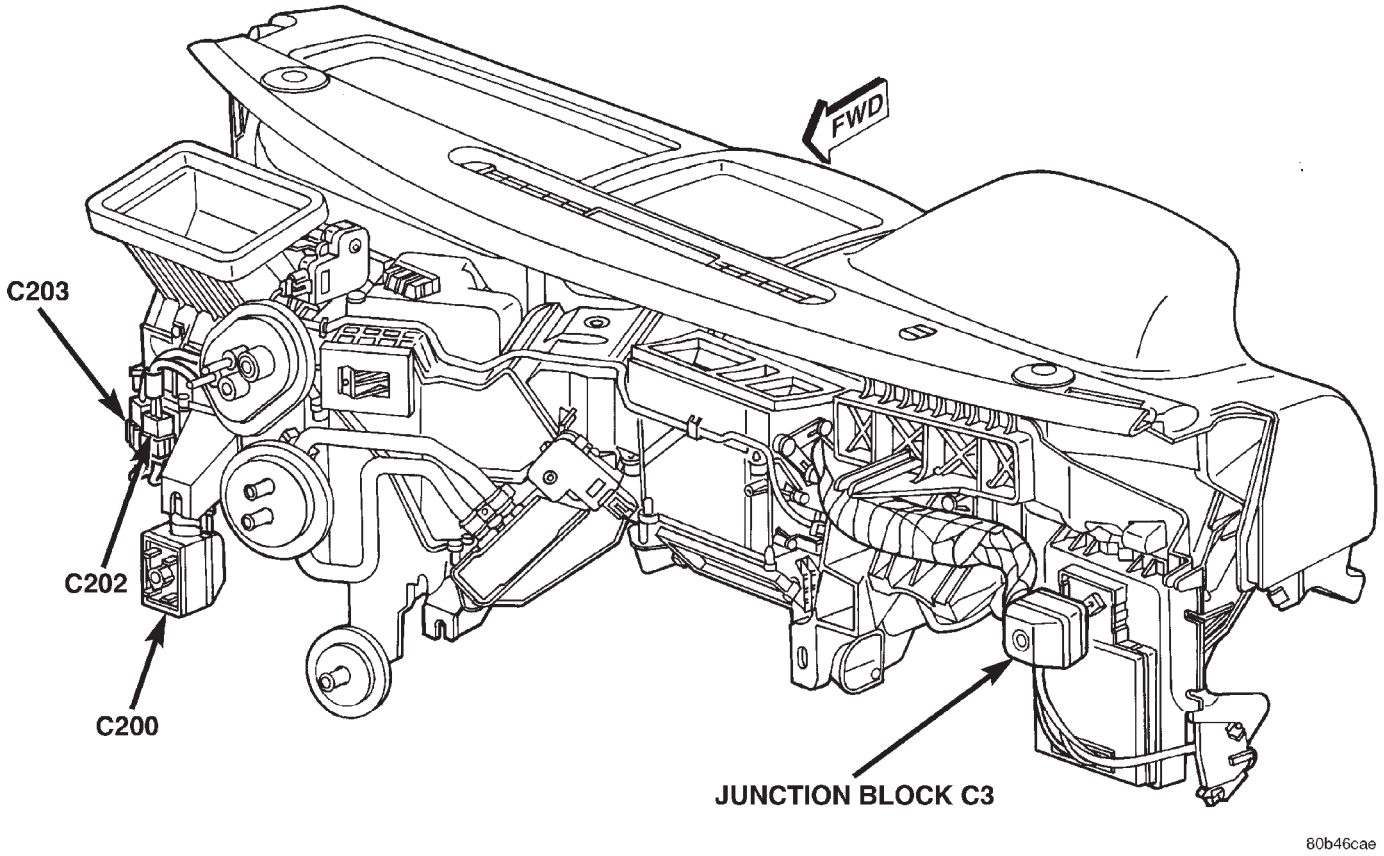

Fig. 21 Instrument Panel Rear

CONNECTOR/GROUND LOCATIONS (Continued)

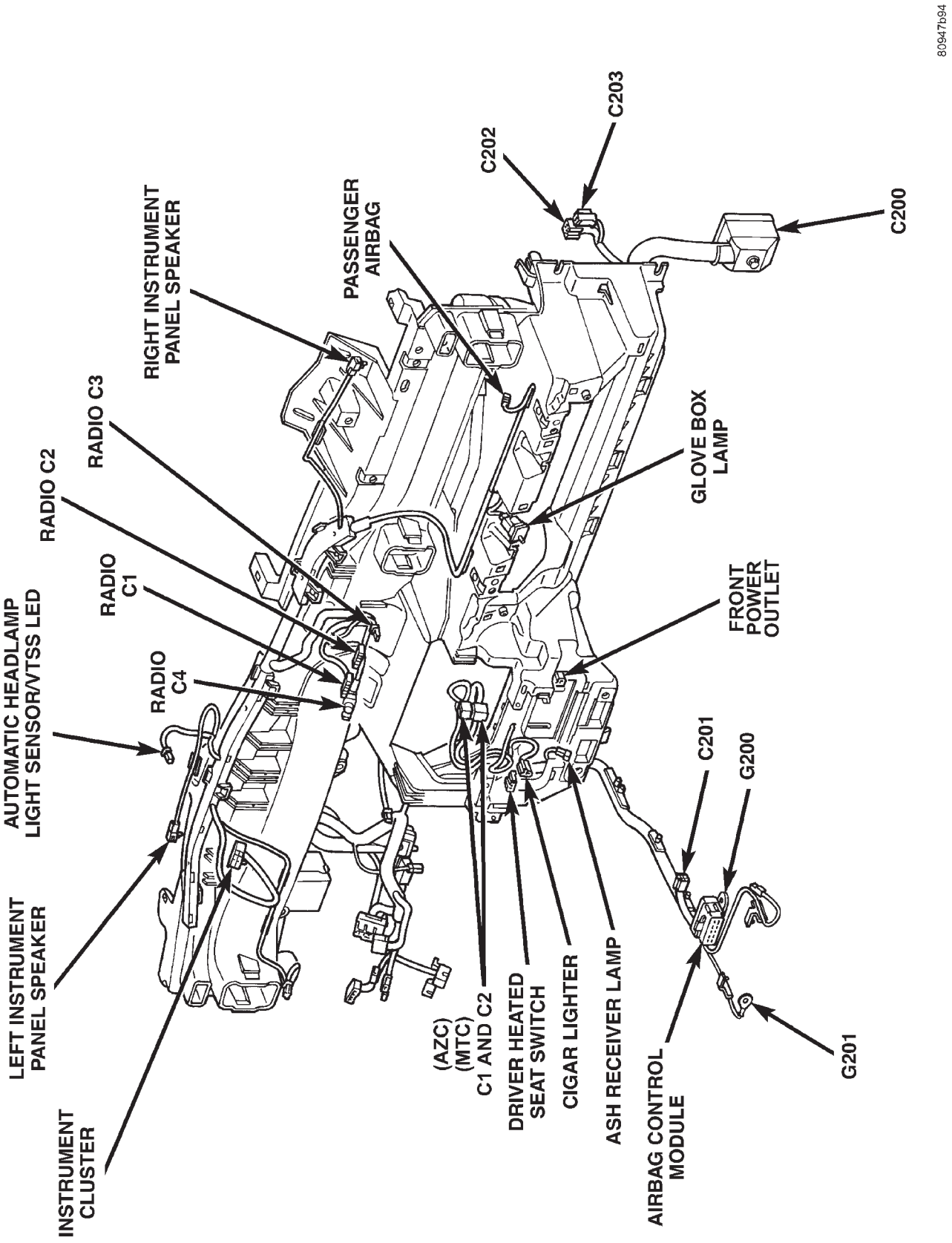

Fig. 22 Instrument Panel Front Connectors

CONNECTOR/GROUND LOCATIONS (Continued)

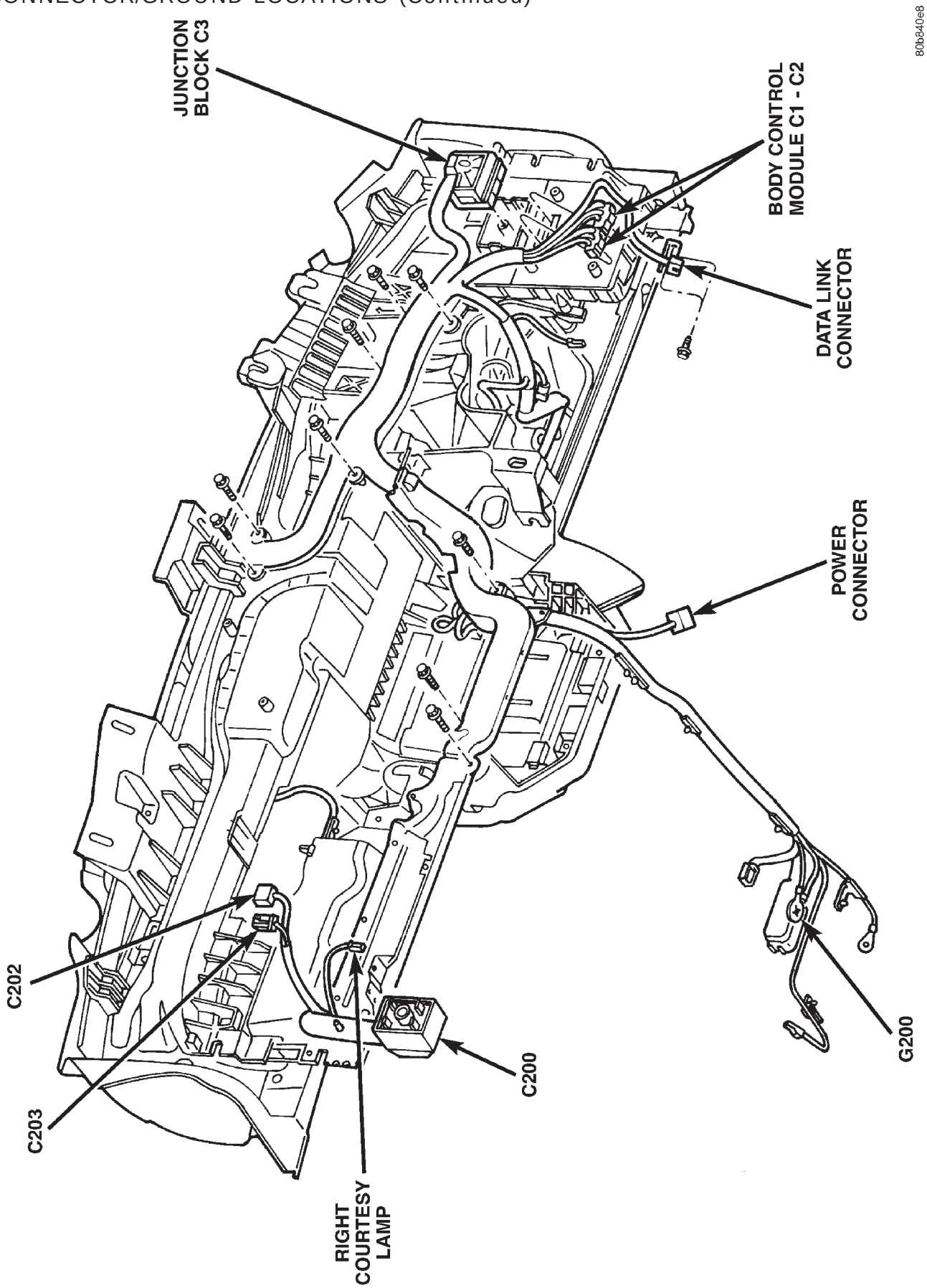

Fig. 23 Instrument Panel Rear Connectors

CONNECTOR/GROUND LOCATIONS (Continued)

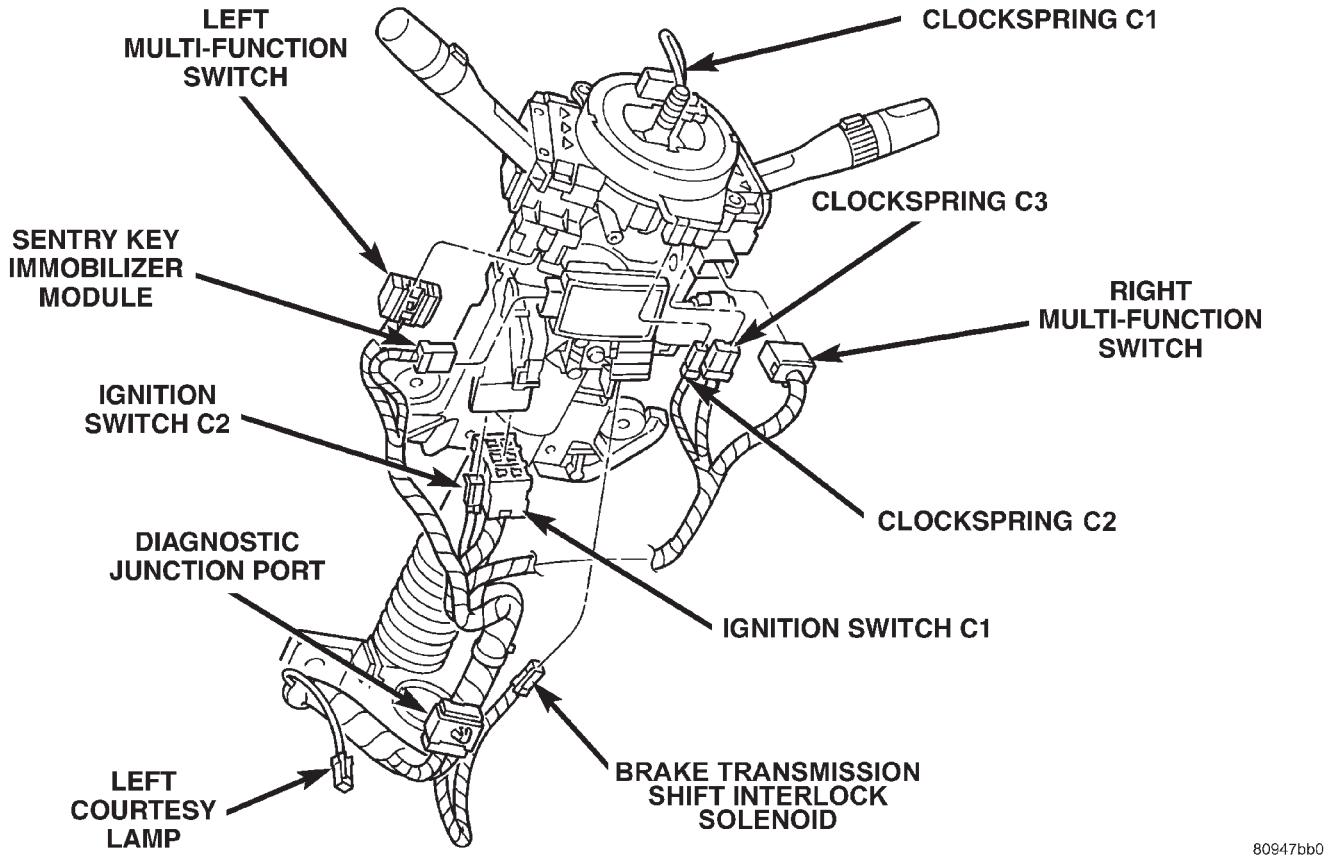

Fig. 24 Steering Column Connectors

CONNECTOR/GROUND LOCATIONS (Continued)

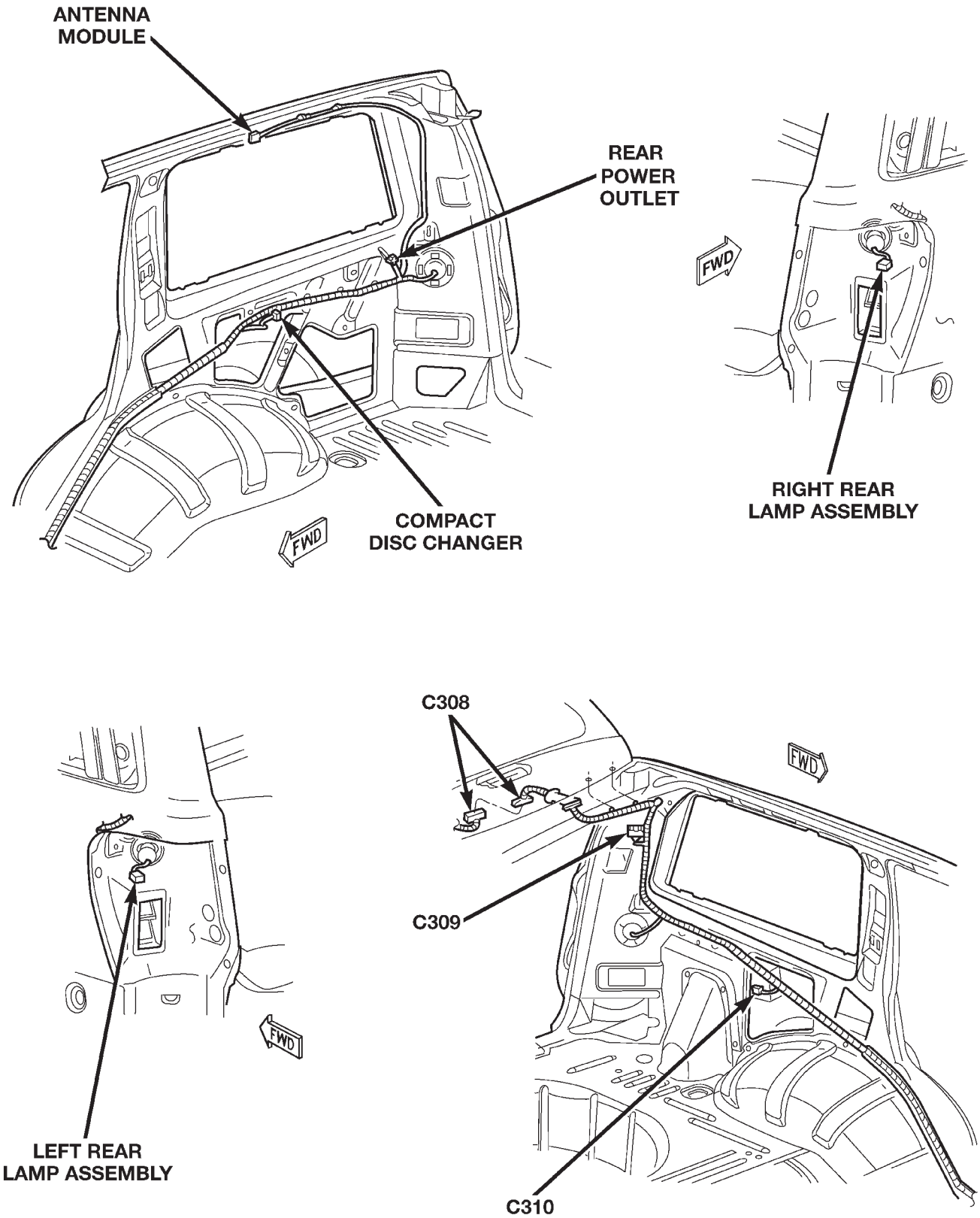

Fig. 25 Body Connectors (Quarter Panels)

CONNECTOR/GROUND LOCATIONS (Continued)

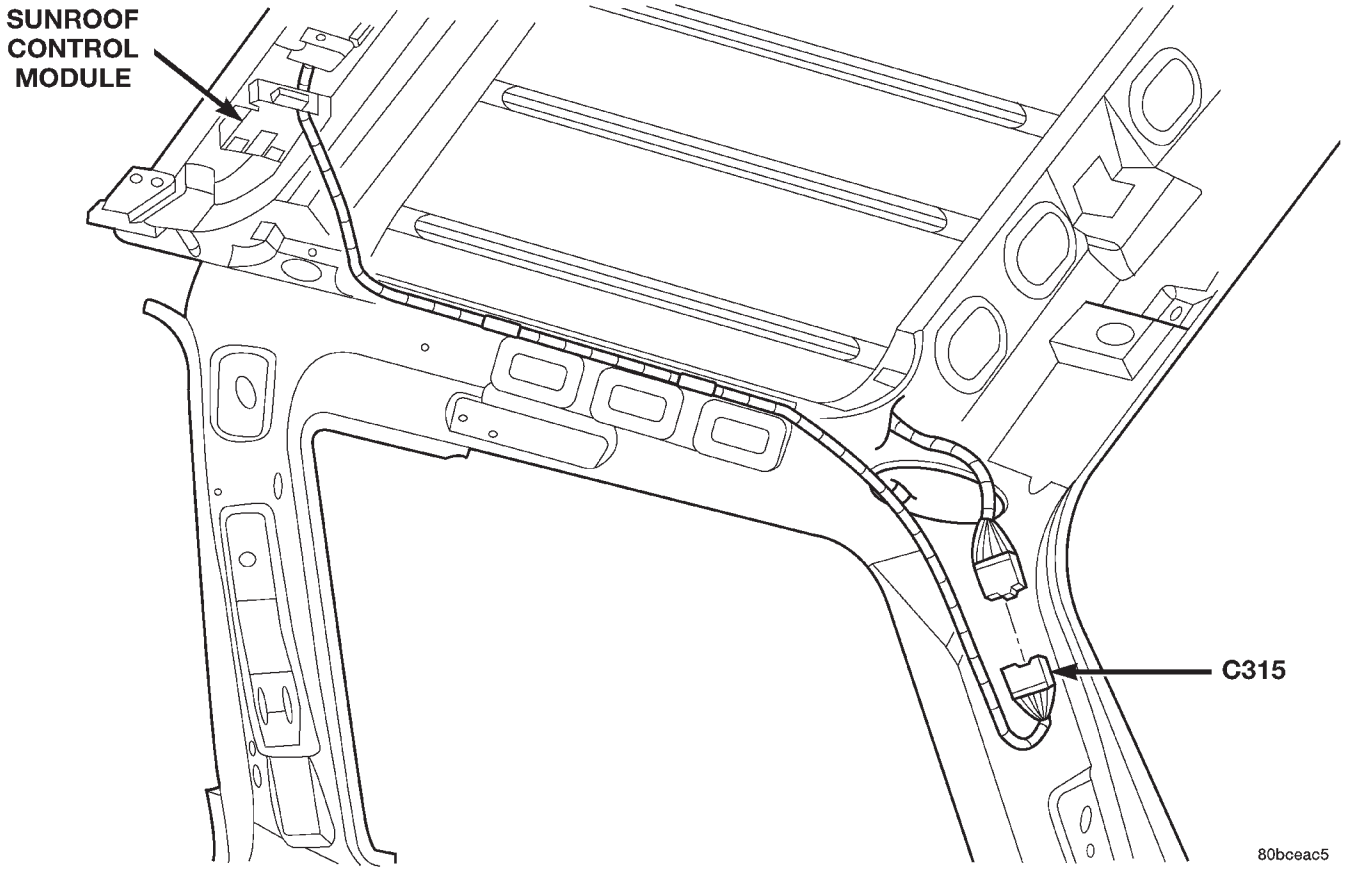

Fig. 26 Roof Connectors

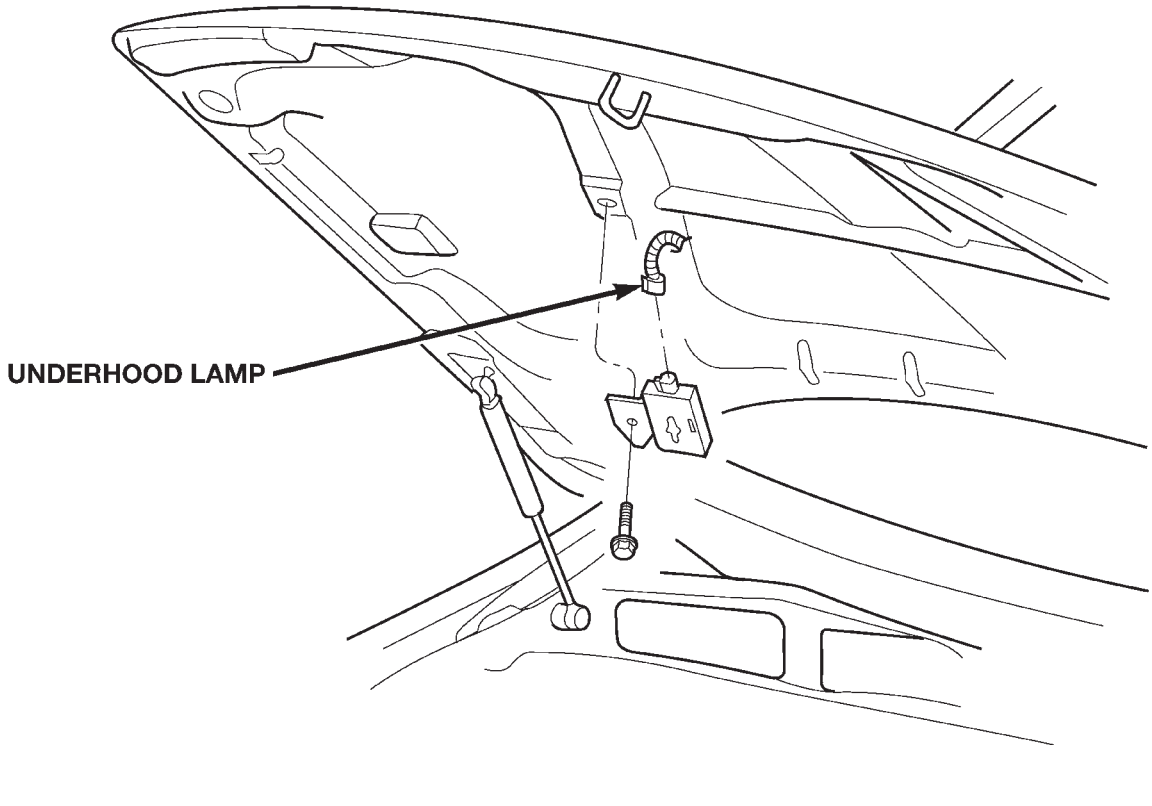

Fig. 27 Underhood Lamp

8W-95 SPLICE LOCATIONS

TABLE OF CONTENTS

page

SPLICE LOCATIONS
DESCRIPTION 1

SPLICE LOCATIONS

DESCRIPTION

This section provides illustrations identifying the general location of wiring splices in this vehicle. A splice index is provided. Use the wiring diagrams in each section for splice number identification. Refer to index for proper splice number. For splices that are not shown in the figures N/S is placed in the Fig. column.

Splice Number	Location	Fig.
S100	Near T/O for Power Distribution Center Eyelet	N/S
S102	Near T/O for Rail Coil	1,5
S103 (4.0L)	Near T/O for Oxygen Sensor 1/1 Upstream	5
S103 (4.7L)	Near T/O for Engine Oil Pressure Switch	N/S
S104 (4.0L)	In T/O for G104	5
S104 (4.7L)	Near T/O for Oxygen Sensors	N/S
S105 (4.7)	Near T/O for Fuel Injector No.7	1
S105 (4.0)	Near T/O for Crankshaft Position sensor	5
S106	In T/O for Oxygen Sensors	2,5
S107 (4.7L)	Near T/O for Fuel Injector No. 7	1
S107 (4.0L)	Near T/O for Fuel Injector No. 5	4
S109 (4.0L)	Near T/O for Fuel Injector No. 2	4
S109 (4.7L)	Near T/O for Fuel Injector No. 6	2
S110	Near T/O for Oxygen Sensor (California)	4
S111	In T/O for 2/2 Downstream Oxygen Sensor	4
S112 (4.0L)	Engine Harness In T/O for C102 C103 C104	5
S112 (4.7L)	Near T/O for Fuel Injector No. 8	2
S113	Near T/O for Transmission Control Module	2
S114	Near T/O for Transmission Control Module	2
S115	Near T/O for Transmission Control Module	2
S116	Near T/O for C102, C103 and C104	2
S117	Near T/O for C102, C103 and C104	2
S118	Near T/O for Fuel Injector No.4	2
S119	In T/O for Crankshaft Position Sensor	N/S
S120	In T/O for Crankshaft Position Sensor	N/S
S121	Near T/O for Idle Air Control Motor	1
S122 (4.0L)	Near T/O for Rail Coil	5
S122 (4.7L)	Near T/O for Oxygen Sensors	3
S123	Near T/O for Capacitor	5

SPLICE LOCATIONS (Continued)

Splice Number	Location	Fig.
S124	Near T/O for Idle Air Control Motor	1
S125	At T/O for Powertrain Control Module C3	6
S126	Near T/O for Battery Temperature Sensor	6
S127	In Trough Near T/O for Powertrain Control Module C3	6
S128	In Trough Near T/O for Powertrain Control Module C3	6
S130	Near T/O for C102	6
S131	In Trough Near T/O for Power Distribution Center	6
S132	Between Troughs in Right Engine Compartment	6
S133	Near T/O for Battery Temperature Sensor	6
S134	In Trough Near T/O for Controller Anit-lock Brake	7
S151	In Headlamp Assembly	N/S
S152	In Headlamp Assembly	N/S
S153	In Headlamp Assembly	N/S
S154	In Headlamp Assembly	N/S
S155	In Headlamp Assembly	N/S
S156	In Headlamp Assembly	N/S
S160	Near T/O for C 102	6
S161	In Trough Near T/O for Coolant Level Sensor	6
S200	Near T/O for Passenger Heated Seat Switch	17
S201	Near T/O for Front Power Outlet	17
S202	Near T/O for Passenger Heated Seat Switch	17
S203	Near T/O for Cigar Lighter	17
S204	In Trough Near T/O for Power Connector	17
S205	In Trough Near T/O for Power Connector	17
S206	In Trough Opposite End of Power Connector	17
S207	In Trough Near T/O for Radio Connectors	17
S208	In Trough Near T/O for Radio Connectors	17
S209	In trough Near T/O for Left Courtesy Lamp	17
S210	In trough Near T/O for Left Courtesy Lamp	17
S211	In trough Near T/O for Left Courtesy Lamp	17
S212	In trough Near T/O for Left Courtesy Lamp	17
S213	Near T/O for Cruise Switch No.1	N/S
S214	Near T/O for Cruise Switch No.1	N/S
S215	Near T/O for Horn Switch	N/S
S216	Near T/O for Remote Radio Switche No.2	N/S
S300	Near T/O for G301	9
S301	In T/O for C304	9
S302	In Sill Trough Near T/O for C307	9
S303	In Sill Trough Near T/O for C307	9
S304	In Sill Trough Near T/O for C307	9
S305	In Sill Trough Near T/O for C307	9
S306	Near T/O for C310	16

SPLICE LOCATIONS (Continued)

Splice Number	Location	Fig.
S307	Near T/O for C310	16
S309	Between T/O's for C310 and Left Rear Lamp Assembly	16
S310	Between T/O's for C310 and Left Rear Lamp Assembly	16
S311	Near T/O for Left Rear Lamp Assembly	16
S312	Near T/O for Brake Lamp Switch	10
S313	Near T/O for Brake Lamp Switch	10
S314	Near T/O for Brake Lamp Switch	10
S315	In Center Spline Near T/O for Brake Lamp Switch	10
S316	In Center Spline Trough Side	10
S317	Between Troughs Near T/O for C314	10
S318	Between Troughs Near T/O for C314	10
S319	In Trough Near T/O for C304	9
S324	In T/O for C200	8
S325	Near T/O for Junction Block C5	N/S
S326	Between T/O for C106 and Sill Trough	8
S327	Between T/O for C106 and Sill Trough	8
S328	Between T/O for C106 and Sill Trough	8
S329	In Sill Trough Near T/O for G300	8
S330	Near T/O for C306	8
S331	In Sill Trough Near T/O for C303	8
S332	In Sill Trough Near T/O for C303	8
S334	In T/O for Power Amplifier C1	8
S336	Near T/O for Driver Power Window Motor	12
S338	Near T/O for Passenger Power Window Motor	13
S339	Near T/O for Passenger Power Window Motor	13
S340	Near T/O for Passenger Door Module C1	13
S341	Near T/O for C306	N/S
S342	Near T/O for C306	N/S
S345	Near T/O for Left Handle Courtesy Lamp	N/S
S346	Near T/O for Left Visor/Vanity Lamp	N/S
S347	Near T/O for Left Visor/Vanity Lamp	N/S
S349	Near T/O for Automatic Day/Night Mirror	N/S
S351	Near T/O for Seat Belt Switch	N/S
S352	Near T/O for Seat Belt Switch	N/S
S353	Near T/O for Driver Lumbar Switch	N/S
S355	Near T/O for C304 and C306	N/S
S356	Near T/O for Left Rear Door Lock Motor/Ajar Switch	14
S357	Near T/O for Right Rear Door Lock Motor/Ajar Switch	14
S359	Near T/O for C106	8
S360	In T/O for C302	10
S361	In T/O for C302	10
S362	In T/O for C200	8

SPLICE LOCATIONS (Continued)

Splice Number	Location	Fig.
S363	In T/O for C200	8
S368	Near T/O for Power Amplifier C1	8
S370	Near T/O for Sunroof Module	15
S400	Near Rear Window Defogger Ground Connector	11
S401	Near Rear Window Defogger Ground Connector	11
S402	Near T/O for Liftgate Flip-Up Ajar Switch	11
S403	Near T/O for Rear Wiper Motor	11
S404	Near T/O for Liftgate Lock Motor	11
S405	In T/O for Rear Wiper Motor	11
S406	In T/O for Trailer Tow Right Turn Relay	N/S
S407	In T/O for Trailer Tow Left Turn Relay	N/S
S408	Near T/O for Trailer Tow Circuit Breaker	16
S409	In T/O for C310	16
S410	At Trailer Tow Connector	16
S411	Near T/O for License Lamp No.1	N/S
S412	In T/O for C312	N/S

SPLICE LOCATIONS (Continued)

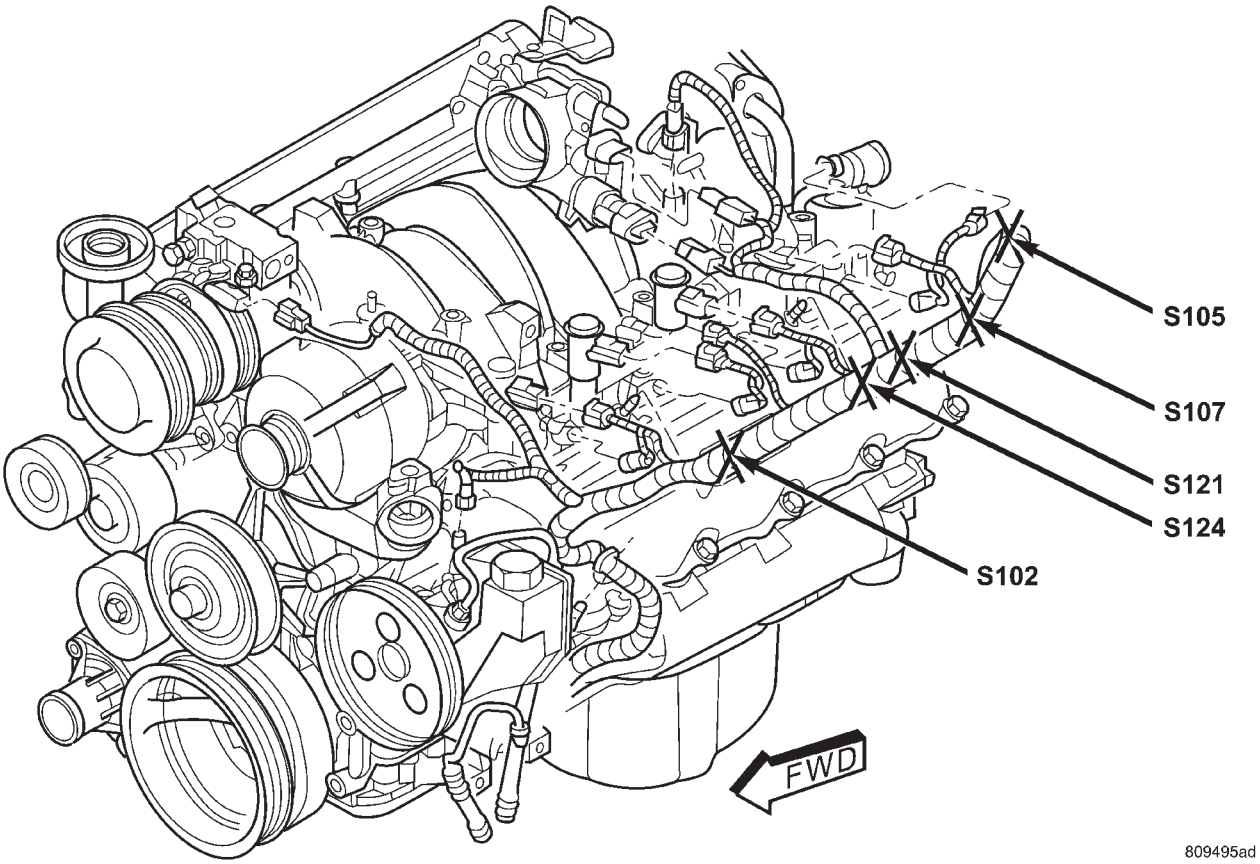

Fig. 1 Engine Splices 4.7 Liter Engine Left Side

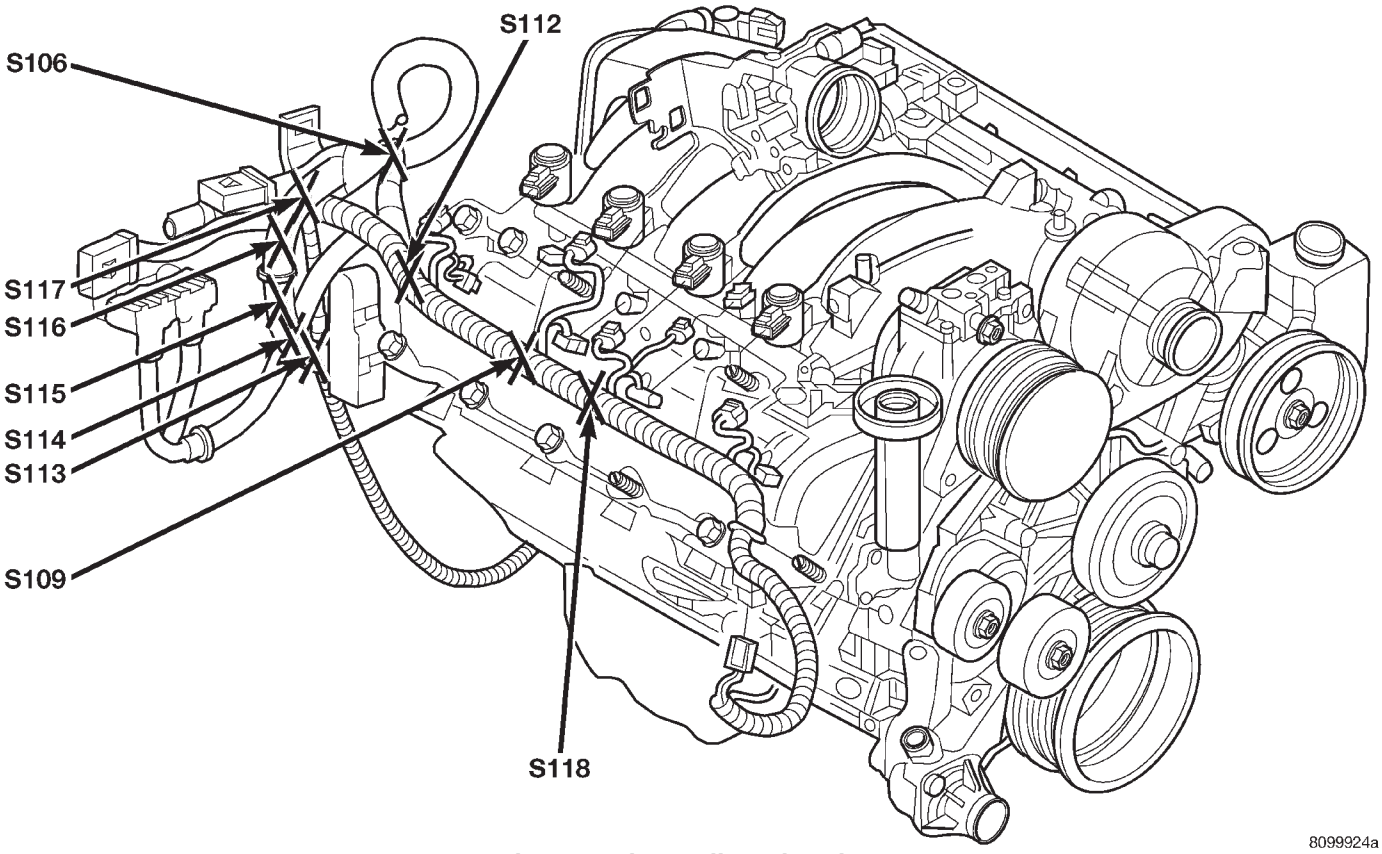

Fig. 2 Engine Splices (4.7L)

SPLICE LOCATIONS (Continued)

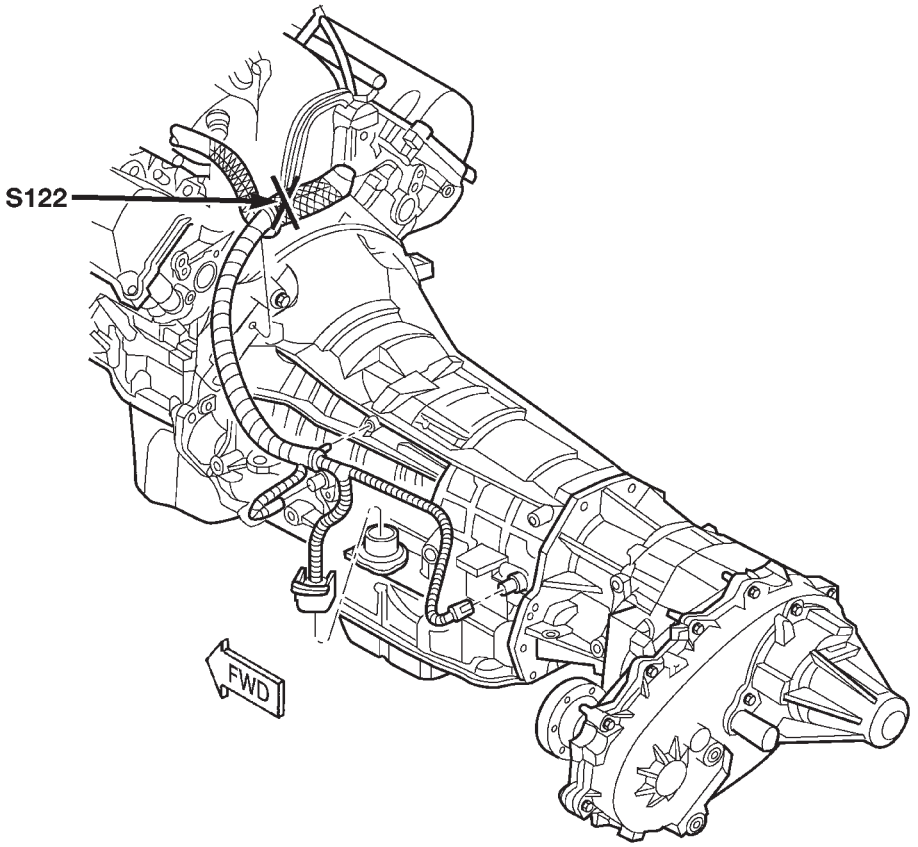

Fig. 3 Transmission Splices (4.7L)

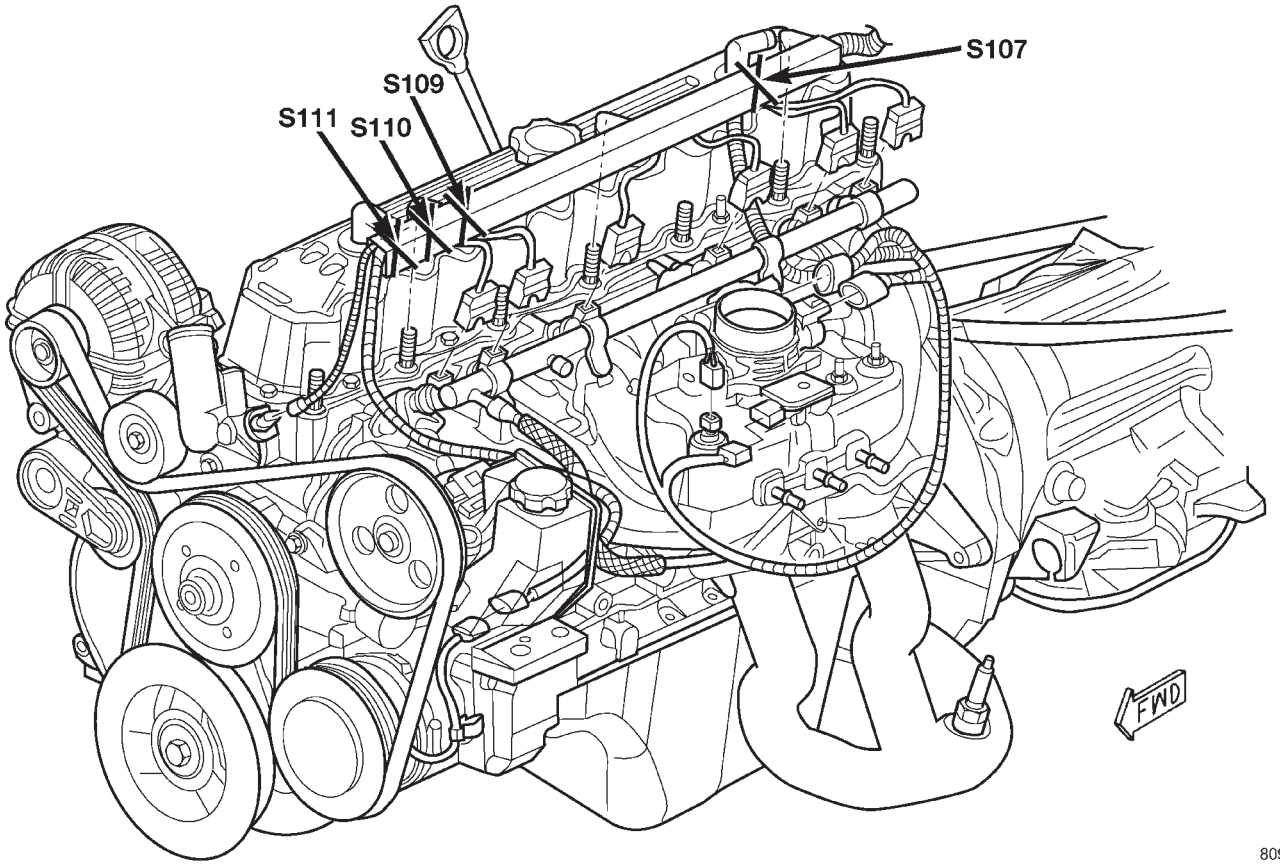

Fig. 4 Engine Splices (4.0L)

SPLICE LOCATIONS (Continued)

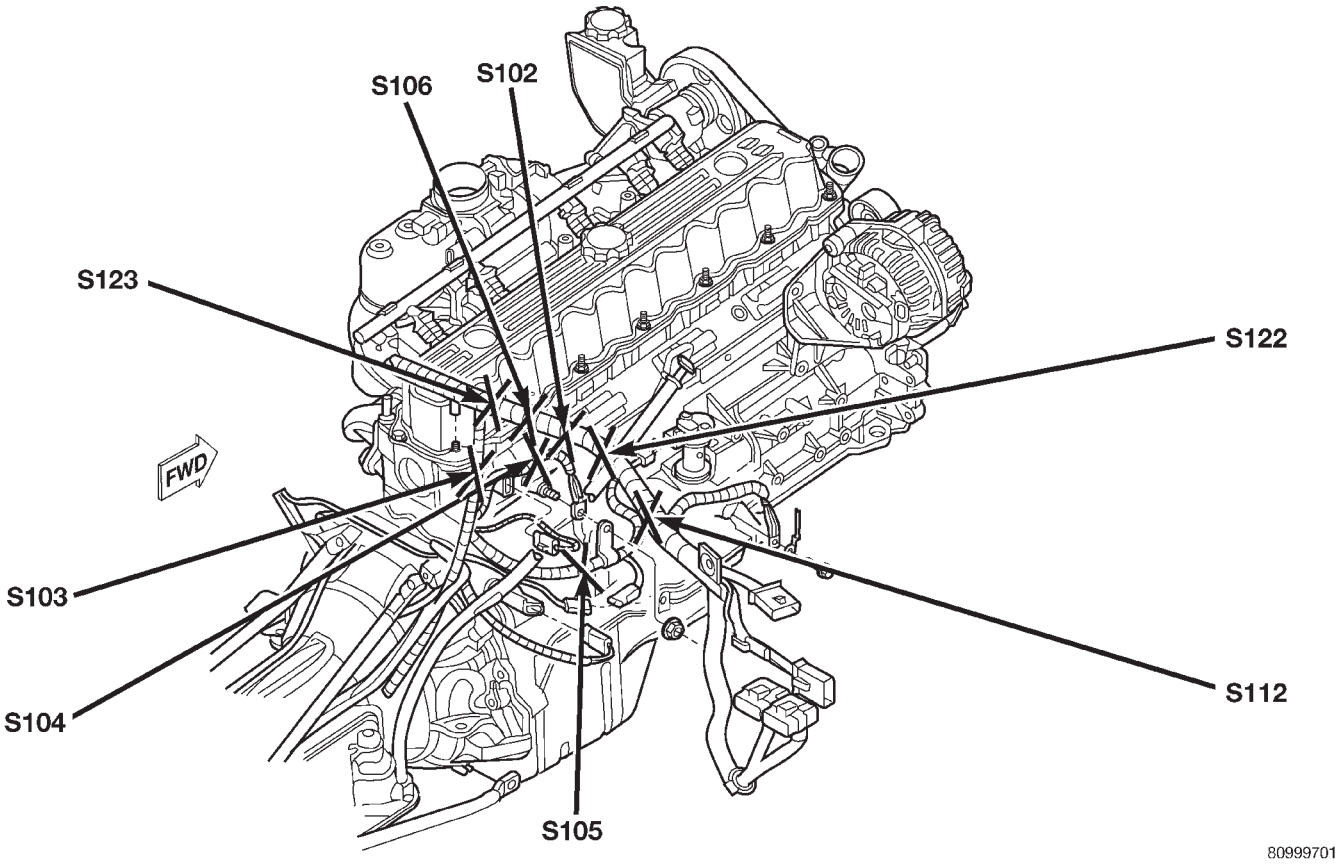

Fig. 5 Engine Splices (4.0L)

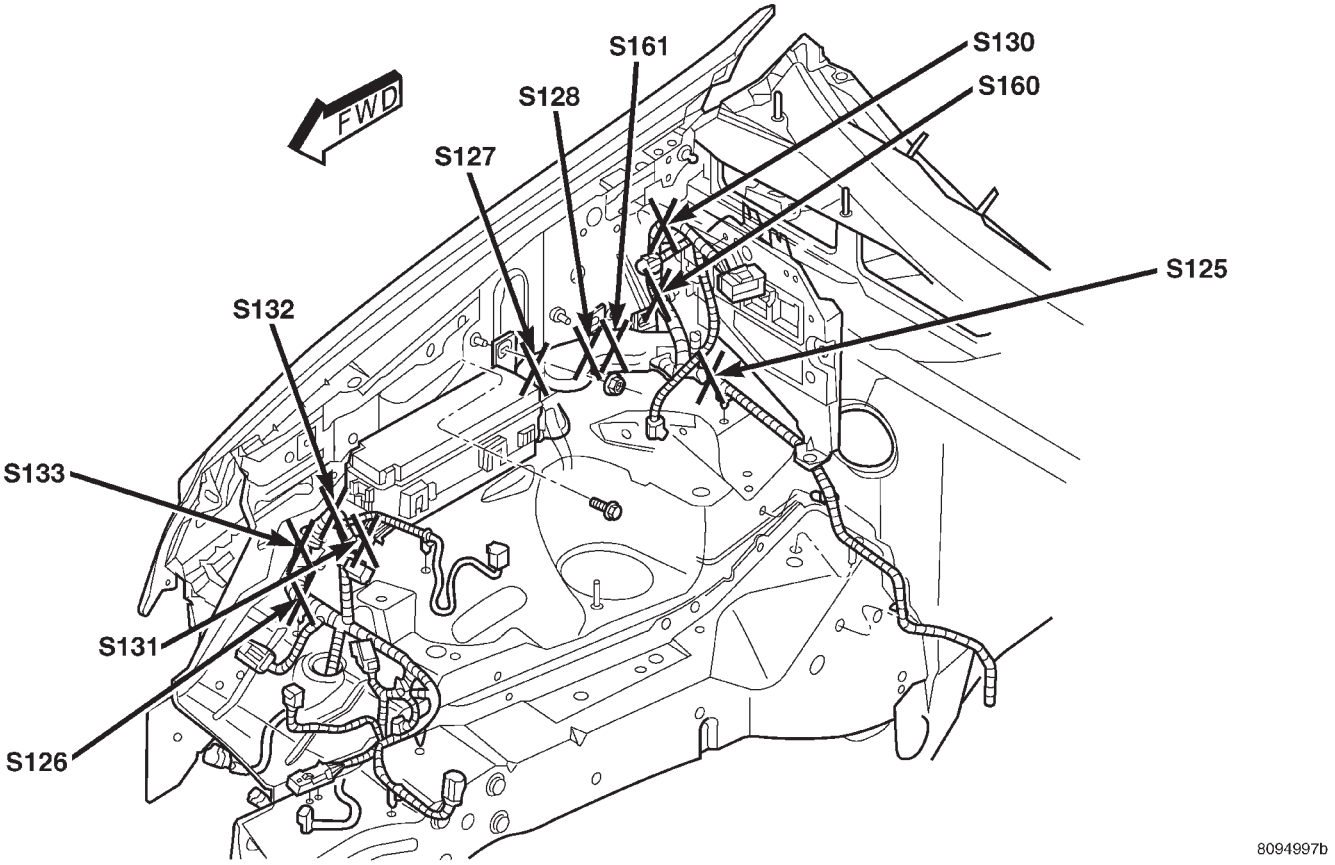

Fig. 6 Right Headlamp and Dash Splices

SPLICE LOCATIONS (Continued)

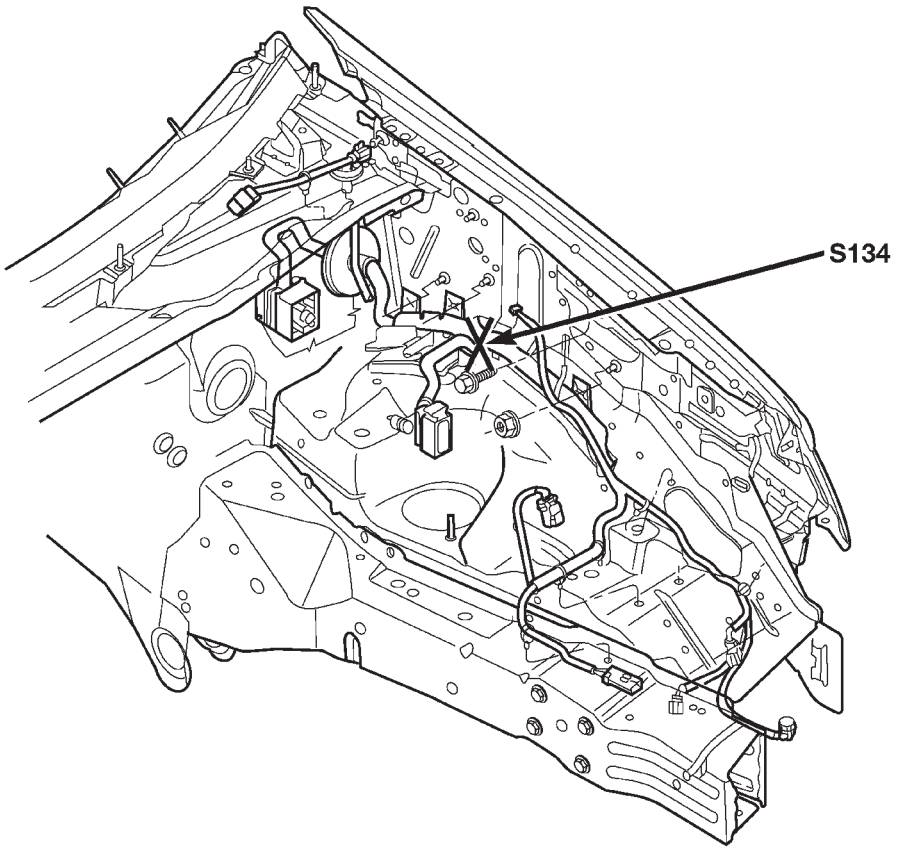

Fig. 7 Left Headlamp and Dash Splices

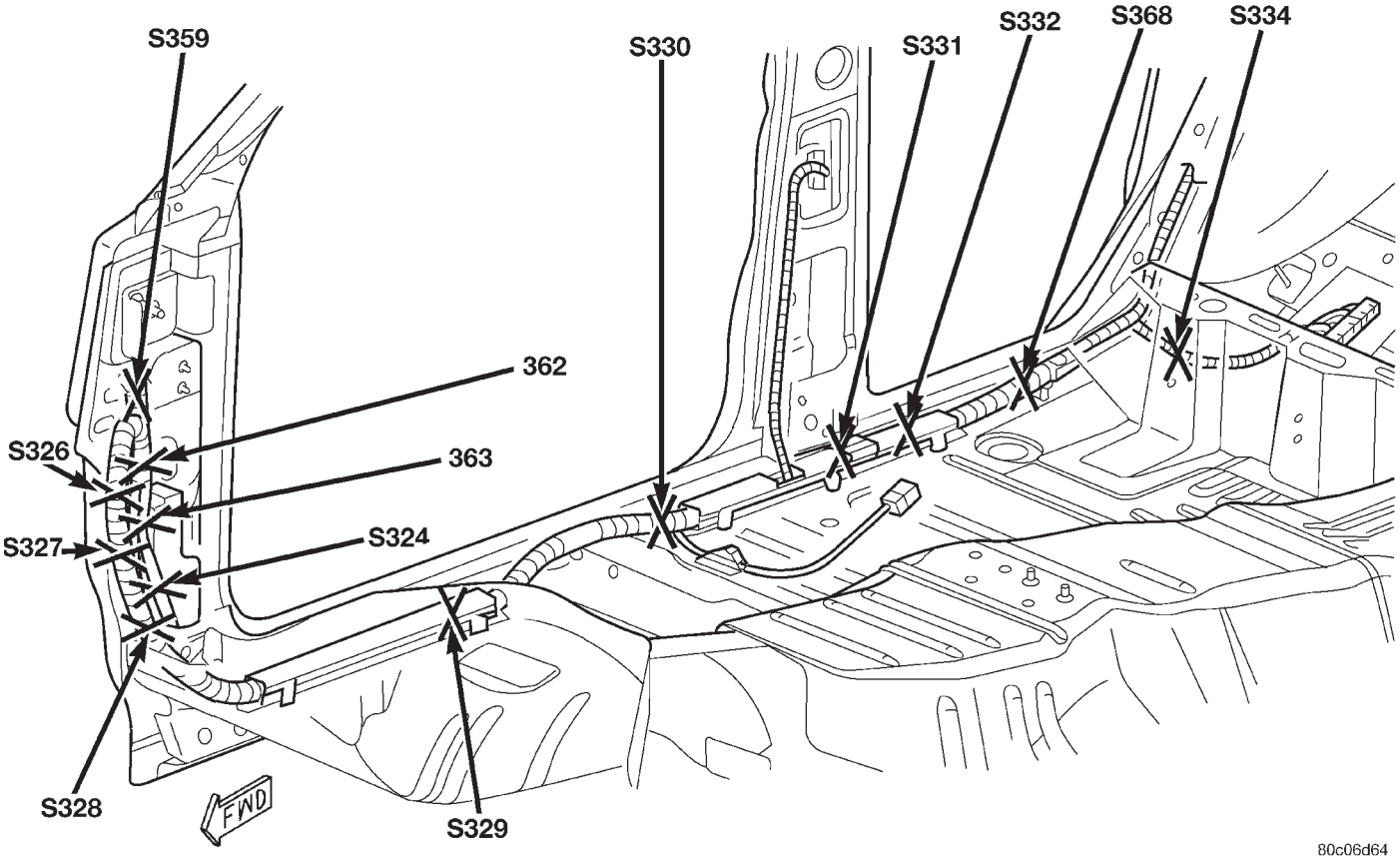

Fig. 8 Body Splices Right Side

SPLICE LOCATIONS (Continued)

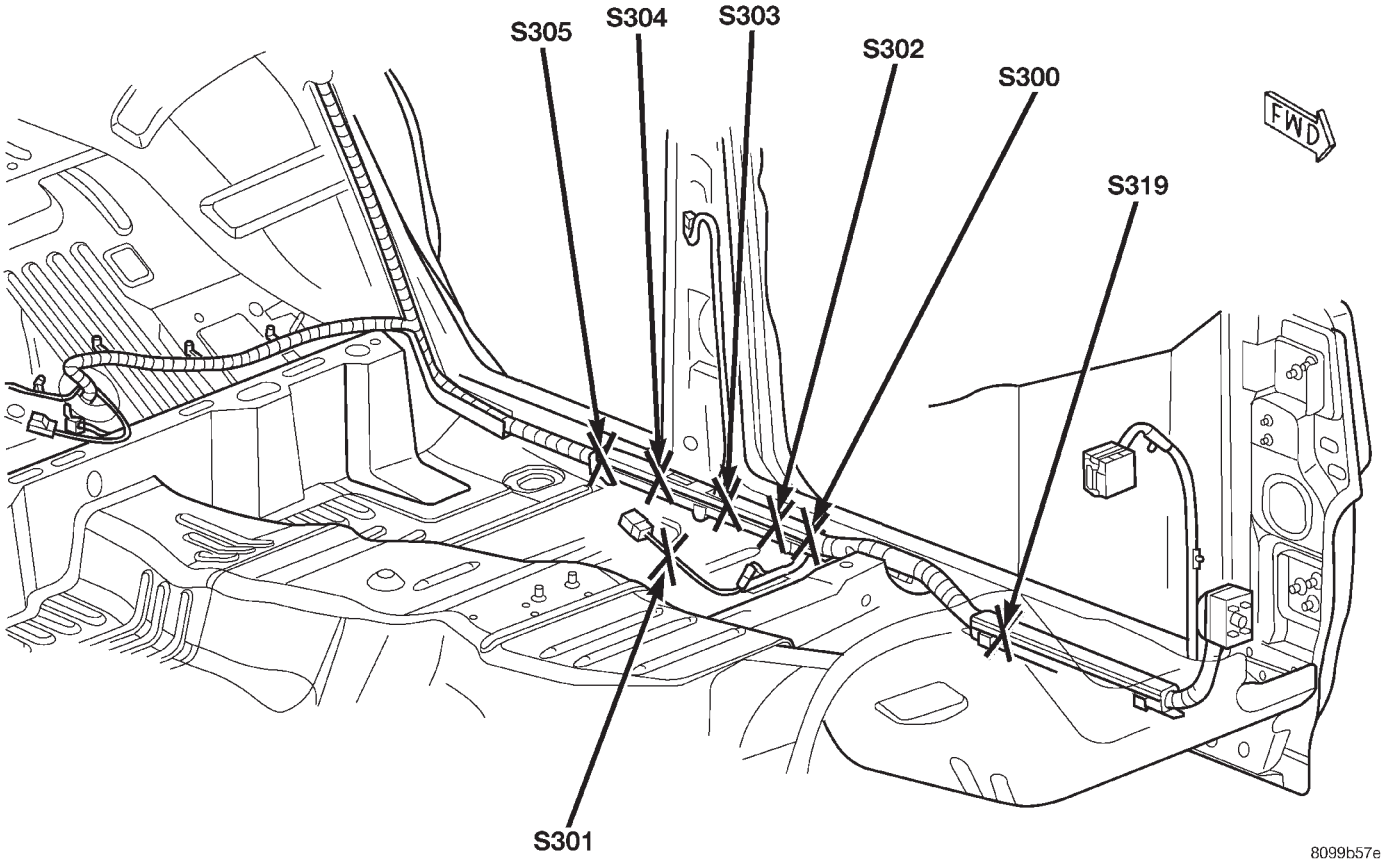

Fig. 9 Body Splices

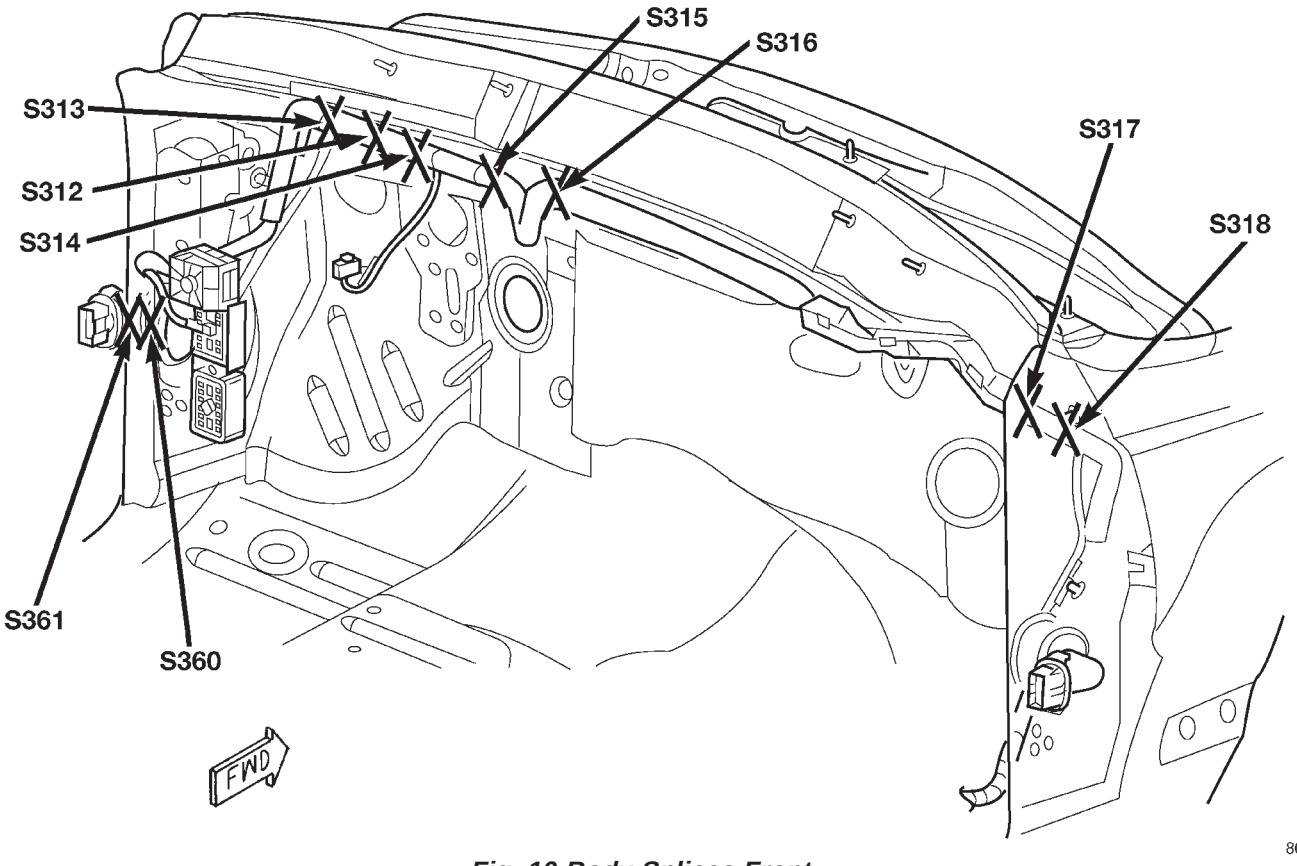

Fig. 10 Body Splices Front

SPLICE LOCATIONS (Continued)

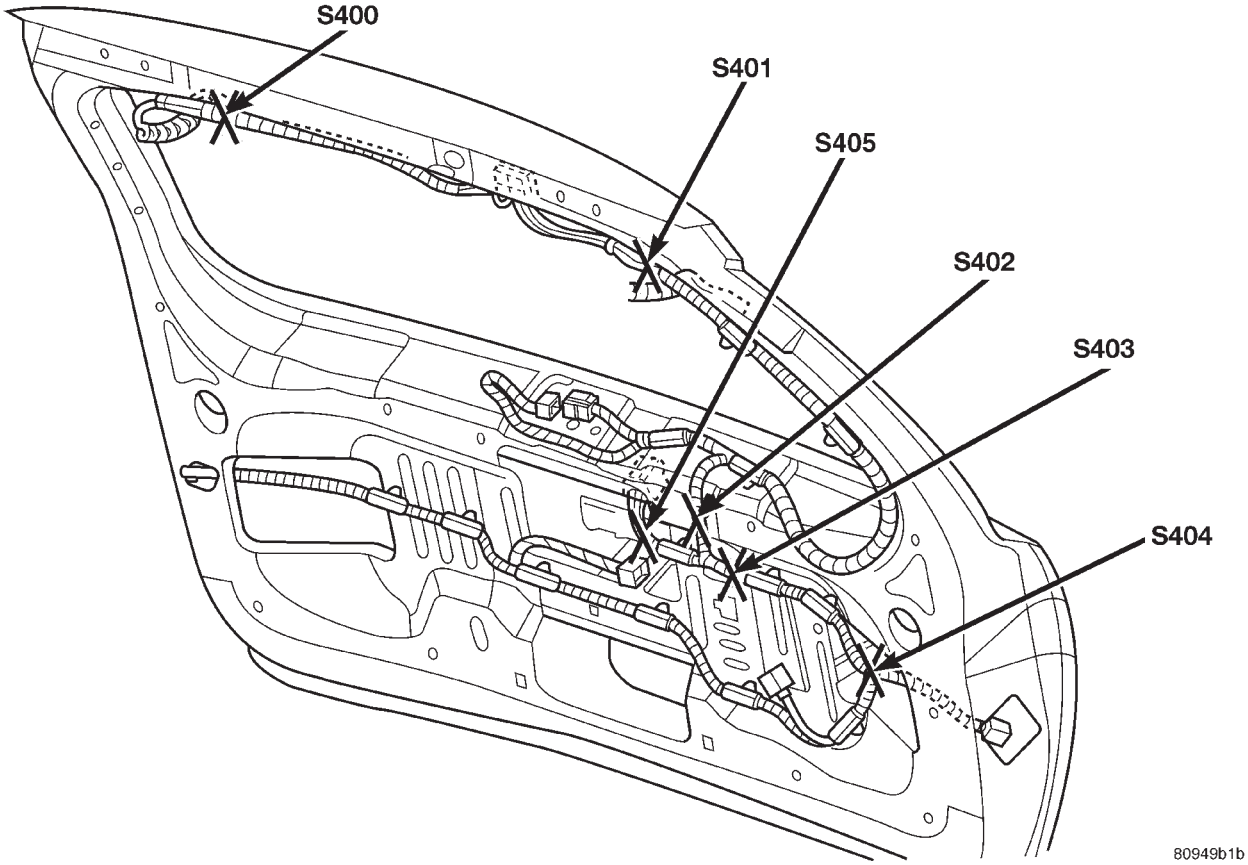

Fig. 11 Liftgate Splices

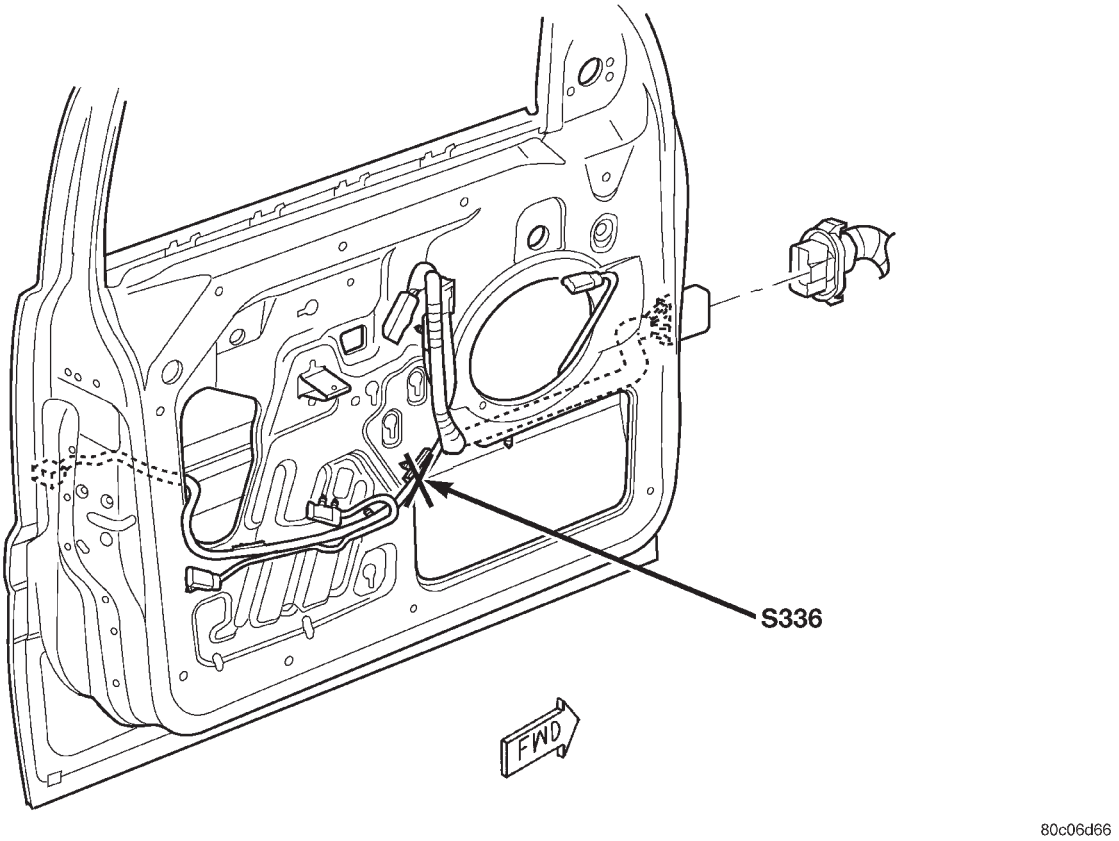

Fig. 12 Driver Door Splices

SPLICE LOCATIONS (Continued)

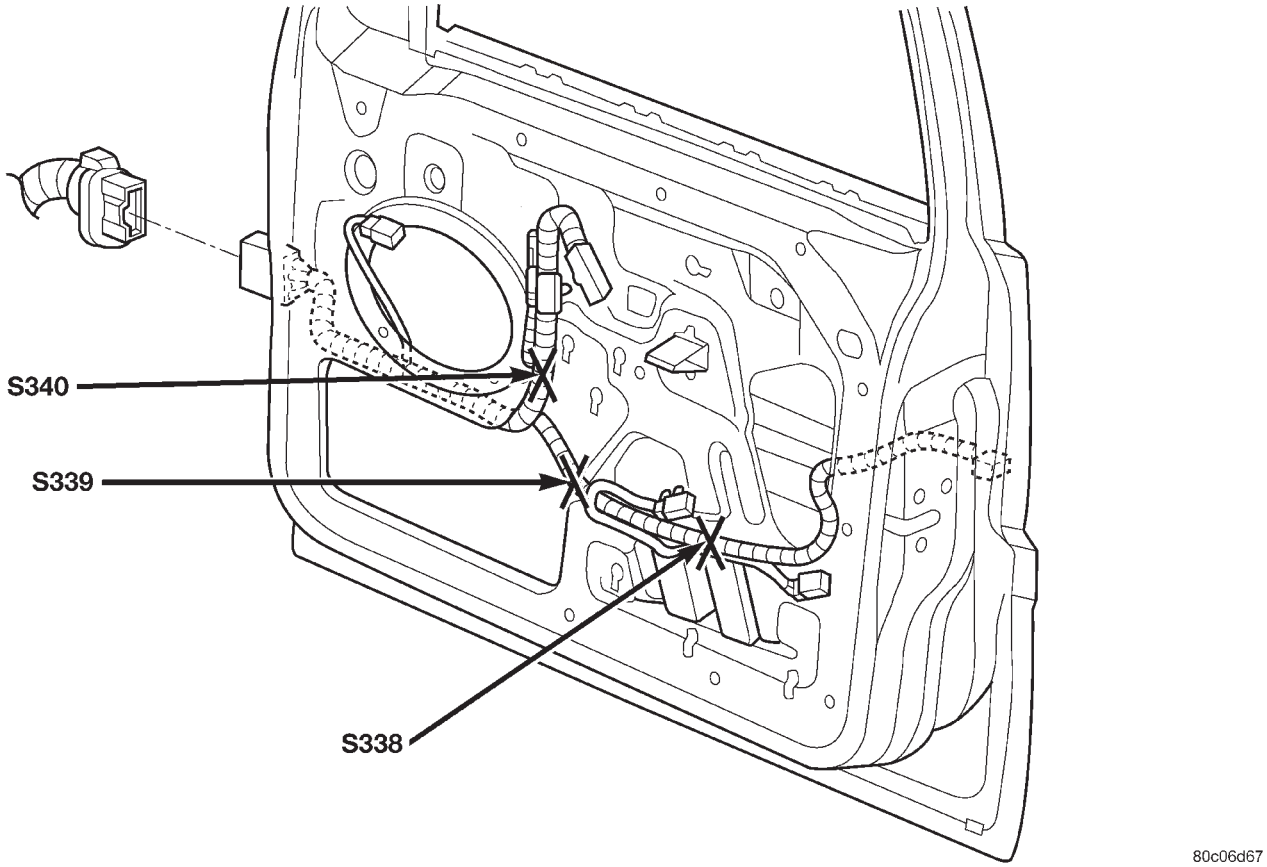

Fig. 13 Passenger Door Splices

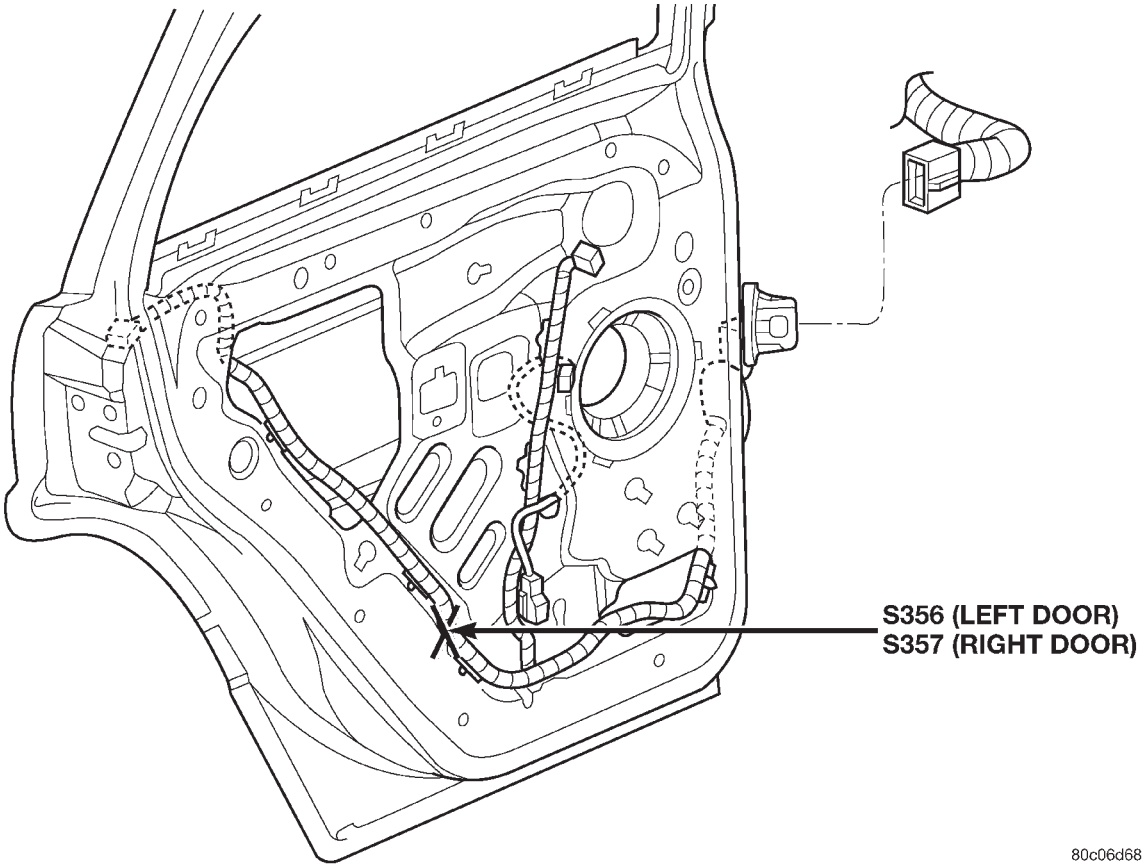

Fig. 14 Rear Door Splices

SPLICE LOCATIONS (Continued)

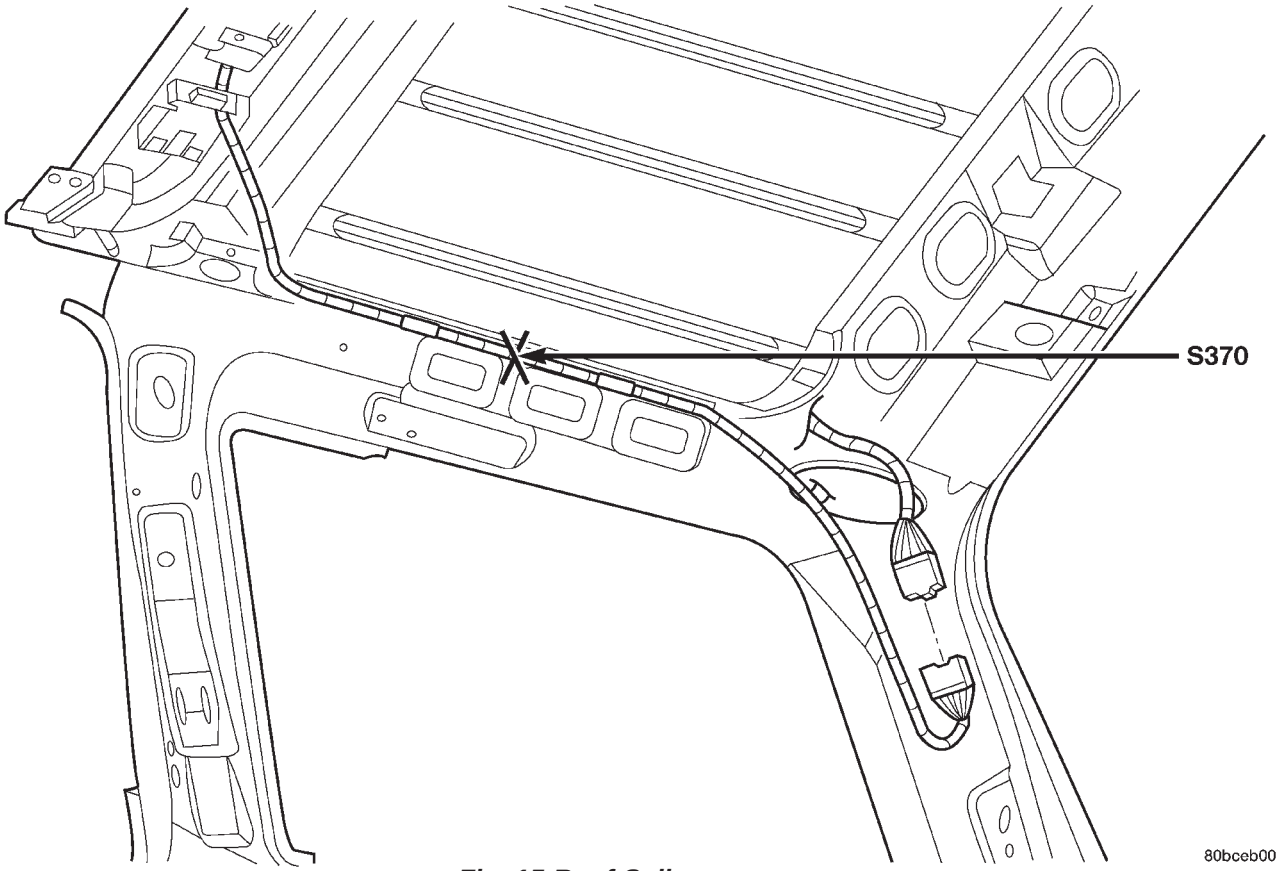

Fig. 15 Roof Splices

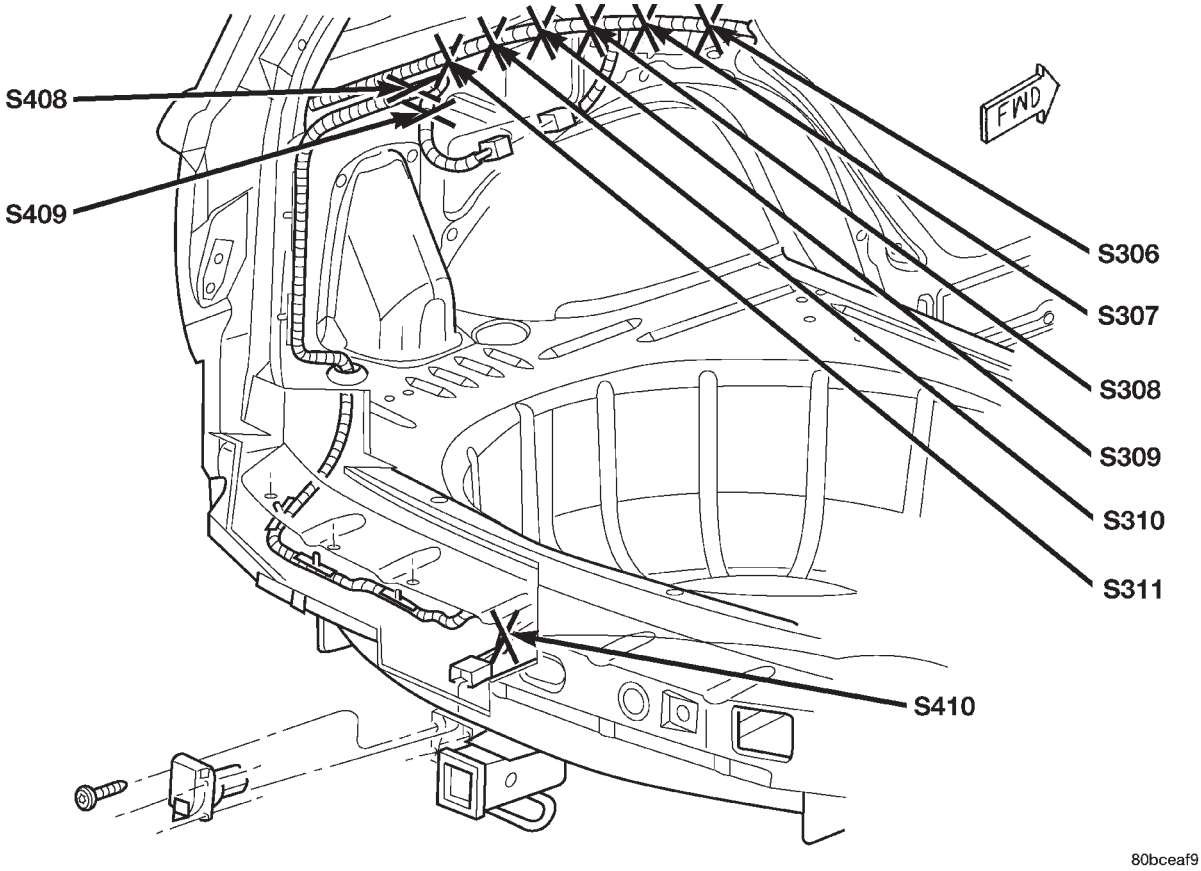

Fig. 16 Trailer Tow Harness Splices

SPLICE LOCATIONS (Continued)

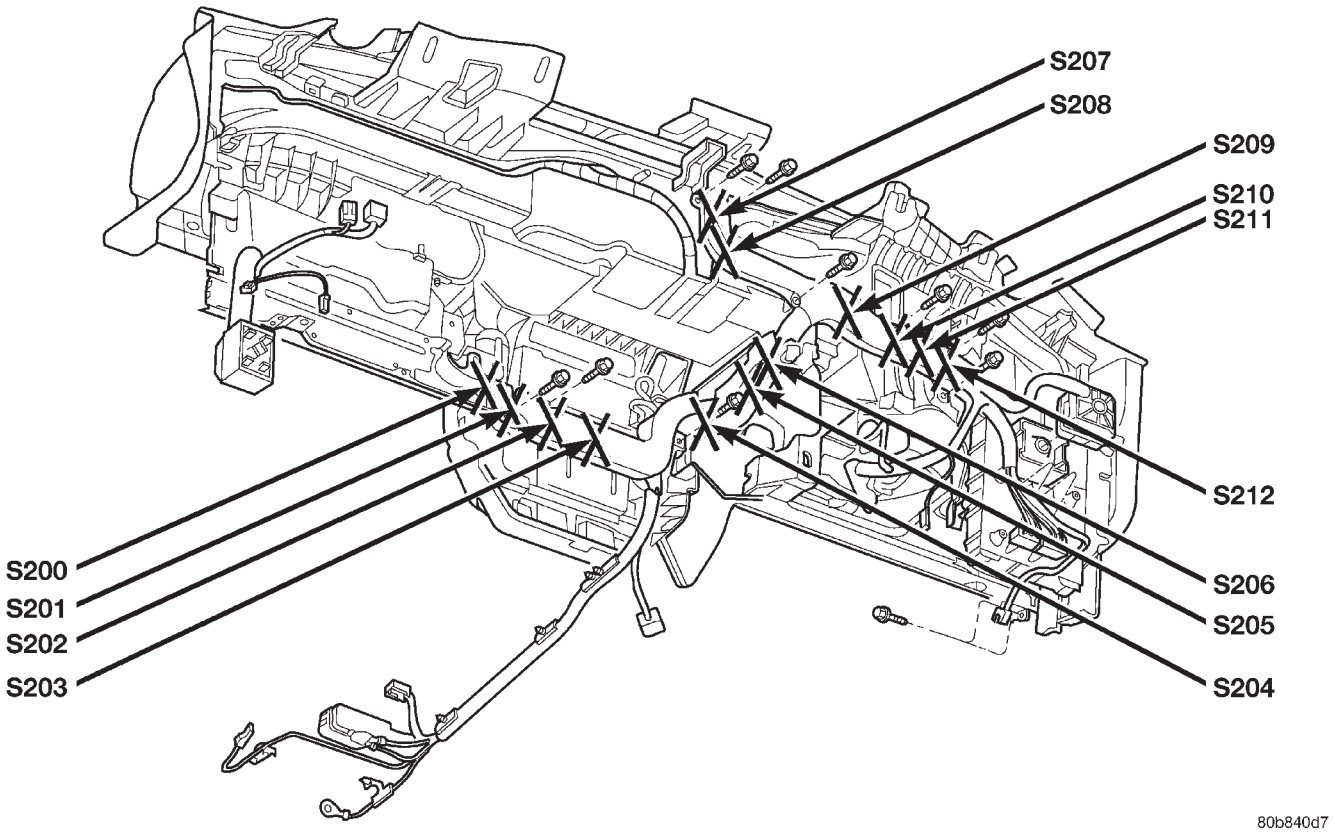

Fig. 17 Instrument Panel Splices

8W-97 POWER DISTRIBUTION

TABLE OF CONTENTS

page

POWER DISTRIBUTION
DESCRIPTION 1
OPERATION 1
SPECIAL TOOLS 2
CIGAR LIGHTER OUTLET
DESCRIPTION 2
OPERATION 2
DIAGNOSIS AND TESTING 2
CIGAR LIGHTER OUTLET 2
CIGAR LIGHTER OUTLET DOOR SPRING
REMOVAL 3
INSTALLATION 3
IGNITION-OFF DRAW FUSE
DESCRIPTION 3
OPERATION 3
REMOVAL 4
INSTALLATION 4
JUNCTION BLOCK
DESCRIPTION 4
OPERATION 5
REMOVAL 5
INSTALLATION 6
POWER DISTRIBUTION CENTER
DESCRIPTION 7
OPERATION 8
REMOVAL 8
DISASSEMBLY 8
ASSEMBLY 11
INSTALLATION 12
POWER OUTLET
DESCRIPTION 12
OPERATION 13
DIAGNOSIS AND TESTING 13
FRONT POWER OUTLET 13
REAR POWER OUTLET 13
REMOVAL 14
INSTALLATION 15
POWER OUTLET RELAY
DESCRIPTION 16
OPERATION 16
DIAGNOSIS AND TESTING 16
POWER OUTLET RELAY 16
REMOVAL 17
INSTALLATION 17
IGNITION-OFF DRAW WIRE HARNESS CONNECTOR
DESCRIPTION 17
OPERATION 18
FUSE COVER
REMOVAL 18
INSTALLATION 19

POWER DISTRIBUTION

DESCRIPTION

This group covers the various standard and optional power distribution components used on this model. The power distribution system for this vehicle consists of the following components:

- Power Distribution Center (PDC)
- Junction Block (JB)
- Power Outlets.

The power distribution system also incorporates various types of circuit control and protection features, including:

- Automatic resetting circuit breakers
- Blade-type fuses
- Bus bars
- Cartridge fuses
- Circuit splice blocks
- Flashers
- Fusible links
- Relays.

Following are general descriptions of the major components in the power distribution system. See the owner's manual in the vehicle glove box for more information on the features and use of all of the power distribution system components. Refer to Wiring Diagrams for complete circuit diagrams.

OPERATION - POWER DISTRIBUTION SYSTEM

The power distribution system for this vehicle is designed to provide safe, reliable, and centralized distribution points for the electrical current required to operate all of the many standard and optional factory-installed electrical and electronic powertrain, chassis, safety, security, comfort and convenience systems. At the same time, the power distribution system was designed to provide ready access to these electrical distribution points for the vehicle technician to use when conducting diagnosis and repair of faulty circuits. The power distribution system can also prove useful for the sourcing of additional electrical circuits that may be required to provide the electrical current needed to operate many accessories

that the vehicle owner may choose to have installed in the aftermarket.

NOTE: DO NOT ATTEMPT TO SWAP POWER DISTRIBUTION CENTERS (PDC) FROM ONE VEHICLE TO ANOTHER. MOST OF THESE ASSEMBLIES ARE VEHICLE FEATURE SPECIFIC AND THEREFORE NOT INTERCHANGEABLE. ALWAYS USE THE CORRECT PART NUMBERED ASSEMBLY WHEN DIAGNOSING OR REPLACING A PDC.

SPECIAL TOOLS

POWER DISTRIBUTION SYSTEMS

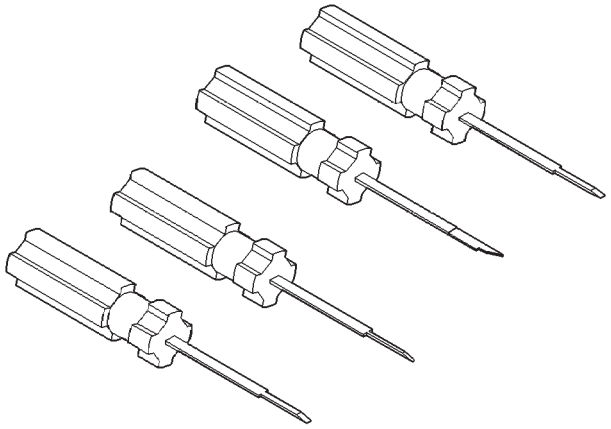

Terminal Pick Kit 6680

CIGAR LIGHTER OUTLET

DESCRIPTION

A cigar lighter receptacle is standard equipment on this model. On models equipped with the optional Smoker's Package, the cigar lighter knob and heating element are included. On models without the Smoker's Package, the cigar lighter receptacle is equipped with a snap fit plastic cap and is treated as an extra accessory power outlet. The cigar lighter receptacle is installed in the instrument panel center lower bezel, which is located near the bottom of the instrument panel center stack area, below the heater and air conditioner controls. The cigar lighter base is secured by a snap fit within the center lower bezel.

The cigar lighter receptacle, plastic cap and the knob and heating element unit are available for service replacement. These components cannot be repaired and, if faulty or damaged, they must be replaced.

OPERATION

The cigar lighter consists of two major components: a knob and heating element unit, and the cigar lighter base or receptacle shell. The receptacle shell is connected to ground, and an insulated contact in the bottom of the shell is connected to battery current. The cigar lighter receives battery voltage from a fuse in the junction block through the cigar lighter relay only when the ignition switch is in the Accessory or On positions. Refer to **Cigar Lighter Relay** in the Description and Operation section of this group for more information on this component.

The cigar lighter knob and heating element are encased within a spring-loaded housing, which also features a sliding protective heat shield. When the knob and heating element are inserted in the receptacle shell, the heating element resistor coil is grounded through its housing to the receptacle shell. If the cigar lighter knob is pushed inward, the heat shield slides up toward the knob exposing the heating element, and the heating element extends from the housing toward the insulated contact in the bottom of the receptacle shell.

Two small spring-clip retainers are located on either side of the insulated contact inside the bottom of the receptacle shell. These clips engage and hold the heating element against the insulated contact long enough for the resistor coil to heat up. When the heating element is engaged with the contact, battery current can flow through the resistor coil to ground, causing the resistor coil to heat.

When the resistor coil becomes sufficiently heated, excess heat radiates from the heating element causing the spring-clips to expand. Once the spring-clips expand far enough to release the heating element, the spring-loaded housing forces the knob and heating element to pop back outward to their relaxed position. When the cigar lighter knob and element are pulled out of the receptacle shell, the protective heat shield slides downward on the housing so that the heating element is recessed and shielded around its circumference for safety.

DIAGNOSIS & TESTING - CIGAR LIGHTER OUTLET

For complete circuit diagrams, refer to **Horn/Cigar Lighter/Power Outlet** in Wiring Diagrams.

WARNING: ON VEHICLES EQUIPPED WITH AIRBAGS, REFER TO RESTRAINTS BEFORE ATTEMPTING ANY STEERING WHEEL, STEERING COLUMN, OR INSTRUMENT PANEL COMPONENT DIAGNOSIS OR SERVICE. FAILURE TO TAKE THE PROPER PRECAUTIONS COULD RESULT IN ACCIDENTAL AIRBAG DEPLOYMENT AND POSSIBLE PERSONAL INJURY.

CIGAR LIGHTER OUTLET (Continued)

(1) Check the fused B(+) fuse in the junction block. If OK, go to Step 2. If not OK, repair the shorted circuit or component as required and replace the faulty fuse.

(2) Turn the ignition switch to the On position. Check for battery voltage at the fused B(+) fuse in the junction block. If OK, go to Step 3. If not OK, refer to **Cigar Lighter Relay** in the Diagnosis and Testing section of this group.

(3) Remove the cigar lighter knob and element from the cigar lighter receptacle shell. Check for continuity between the inside circumference of the cigar lighter receptacle shell and a good ground. there should be continuity. If OK, go to Step 4. If not OK, go to Step 5.

(4) Turn the ignition switch to the On position. Check for battery voltage at the insulated contact located at the back of the cigar lighter receptacle shell. If OK, replace the faulty cigar lighter knob and element. If not OK, go to Step 5.

(5) Turn the ignition switch to the Off position. Disconnect and isolate the battery negative cable. Remove the instrument panel center lower bezel. Check for continuity between the ground circuit cavity of the cigar lighter wire harness connector and a good ground. There should be continuity. If OK, go to Step 6. If not OK, repair the open ground circuit to ground as required.

(6) Connect the battery negative cable. Turn the ignition switch to the Accessory or On positions. Check for battery voltage at the fused B(+) circuit cavity of the cigar lighter wire harness connector. If OK, replace the faulty cigar lighter receptacle. If not OK, repair the open fused B(+) circuit to the junction block fuse as required.

CIGAR LIGHTER OUTLET DOOR SPRING

REMOVAL

(1) Disconnect and isolate the negative battery cable.

(2) Remove the instrument panel center lower bezel from the I.P. Refer to Body for the procedure.

(3) Remove the cigar lighter outlet door spring from its locating holes (Fig. 1).

INSTALLATION

(1) Install the cigar outlet door spring in its locating holes.

(2) Install the instrument panel center lower bezel on the I.P. Refer to Body for the procedure.

(3) Connect the negative battery cable.

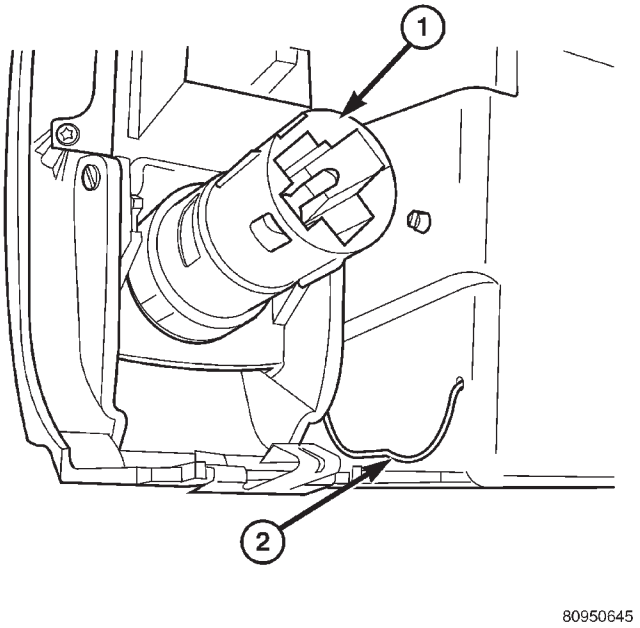

Fig. 1 Cigar Lighter Outlet Door Spring

1 - CIGAR LIGHTER OUTLET
2 - CIGAR LIGHTER OUTLET DOOR SPRING

IGNITION-OFF DRAW FUSE

DESCRIPTION

All vehicles are equipped with an Ignition-Off Draw (IOD) fuse (Fig. 2) that is removed from its cavity in the Power Distribution Center (PDC) when the vehicle is shipped from the factory. Dealer personnel are to remove the IOD fuse from the storage location and install it into PDC fuse cavity 15 as part of the preparation procedures performed just prior to new vehicle delivery.

The PDC has a molded plastic cover that can be removed to provide service access to all of the fuses and relays in the PDC. An integral latch and hinges are molded into the PDC cover for easy removal. A fuse layout map is integral to the underside of the PDC cover to ensure proper fuse and relay identification. The IOD fuse is a 50 ampere maxi-type cartridge fuse and, when removed, it is stored in a spare fuse cavity within the PDC.

OPERATION

The term ignition-off draw identifies a normal condition where power is being drained from the battery with the ignition switch in the Off position. The IOD fuse feeds the memory and sleep mode functions for some of the electronic modules in the vehicle as well as various other accessories that require battery current when the ignition switch is in the Off position,

IOD FUSE (Continued)

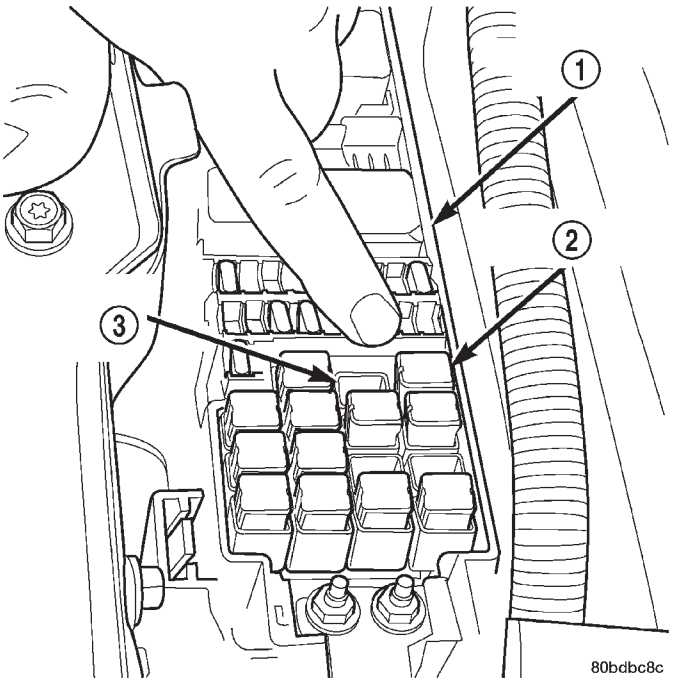

Fig. 2 Ignition-Off Draw Fuse

1 - POWER DISTRIBUTION CENTER
2 - IGNITION-OFF DRAW FUSE
3 - IOD FUSE STORAGE CAVITY

including the clock. The only reason the IOD fuse is removed is to reduce the normal IOD of the vehicle electrical system during new vehicle transportation and pre-delivery storage to reduce battery depletion, while still allowing vehicle operation so that the vehicle can be loaded, unloaded and moved as needed by both vehicle transportation company and dealer personnel.

The IOD fuse is removed from PDC fuse cavity 15 when the vehicle is shipped from the assembly plant. Dealer personnel must install the IOD fuse when the vehicle is being prepared for delivery in order to restore full electrical system operation. Once the vehicle is prepared for delivery, the IOD function of this fuse becomes transparent and the fuse that has been assigned the IOD designation becomes only another Fused B(+) circuit fuse. The IOD fuse serves no useful purpose to the dealer technician in the service or diagnosis of any vehicle system or condition, other than the same purpose as that of any other standard circuit protection device.

The IOD fuse can be used by the vehicle owner as a convenient means of reducing battery depletion when a vehicle is to be stored for periods not to exceed about thirty days. However, it must be remembered that removing the IOD fuse will not eliminate IOD, but only reduce this normal condition. If a vehicle will be stored for more than about thirty days, the battery negative cable should be disconnected to eliminate normal IOD; and, the battery should be tested and recharged at regular intervals during the vehicle storage period to prevent the battery from becoming discharged or damaged. Refer to **Battery System** for additional service information.

REMOVAL

The Ignition-Off Draw (IOD) fuse is removed from Power Distribution Center (PDC) fuse cavity 15 (Fig. 2) when the vehicle is shipped from the assembly plant. Dealer personnel must install the IOD fuse when the vehicle is being prepared for delivery in order to restore full electrical system operation.

(1) Turn the ignition switch to the Off position.
(2) Unlatch and open the cover of the PDC.
(3) Remove the IOD fuse from fuse cavity 15 of the PDC.
(4) Store the removed IOD fuse by installing it in the unused fuse storage cavity 11 of the PDC.
(5) Close and latch the PDC cover.

INSTALLATION

(1) Turn the ignition switch to the Off position.
(2) Unlatch and open the cover of the PDC.
(3) Remove the stored IOD fuse from fuse storage cavity 11 of the PDC.
(4) Use a thumb to press the IOD fuse firmly down into PDC fuse cavity 15.
(5) Close and latch the PDC cover.

JUNCTION BLOCK

DESCRIPTION

An electrical Junction Block (JB) is concealed beneath the driver side of the instrument panel in the passenger compartment of the vehicle (Fig. 3). The JB combines the functions previously provided by a separate fuseblock module and relay center. The JB serves to simplify and centralize numerous electrical components, as well as to distribute electrical current to many of the accessory systems in the vehicle. It also eliminates the need for numerous splice connections. The JB houses up to thirty-three blade-type mini fuses, up to two blade-type automatic resetting circuit breakers, the electronic combination flasher, the Daytime Running Lamp (DRL) module (Canada only) and up to twelve International Standards Organization (ISO) relays (three standard-type and nine micro-type). The JB also incorporates an integral connector and mounting for the Body Control Module (BCM). The BCM is secured with four screws directly to the dash panel side of the JB. Refer to **Body Control Module** in Electronic Control Modules for additional information covering the BCM.

JUNCTION BLOCK (Continued)

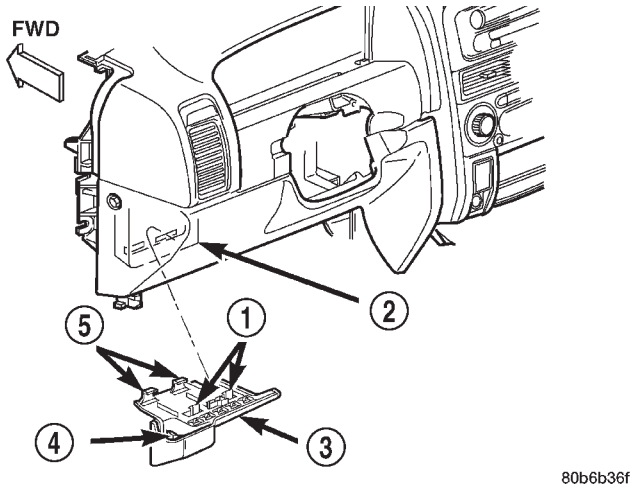

Fig. 3 Junction Block Location

1 - REAR LATCHES
2 - JUNCTION BLOCK AND BODY CONTROL MODULE UNIT
3 - INSTRUMENT PANEL FUSE COVER
4 - SIDE LATCH
5 - FRONT LATCHES

The molded plastic JB housing has integral mounts that are secured with two screws and two snap retainers to the instrument panel steering column support bracket behind the instrument panel steering column opening cover. The JB is concealed above the molded plastic instrument panel fuse cover. Integral latches molded into the fuse cover secure it the JB, the BCM and the 16-way data link connector tab of the instrument panel steering column support bracket. The fuse cover can be pulled downward to disengage the latches and provide service access to all of the fuses, relays and wire harness connectors of the JB. The fuse cover has a fuse puller and spare fuses secured to its upper surface. Refer to **Instrument Panel Fuse Cover** in Body for additional service information.

The JB unit cannot be repaired and is only serviced as an assembly. If any internal circuit or the JB housing is faulty or damaged, the entire JB unit must be replaced. The BCM is available for separate service replacement.

OPERATION

All of the circuits entering and leaving the Junction Block (JB) do so through up to five wire harness connectors, which are connected to the JB through integral connector receptacles molded into the JB housing. Internal connection of all of the JB circuits is accomplished by a printed circuit board. There are also two separate wire harness connections to connector receptacles that are integral to the BCM. Refer to **Junction Block** in Wiring Diagrams for additional information and the location of complete JB circuit diagrams.

REMOVAL

WARNING: ON VEHICLES EQUIPPED WITH AIRBAGS, DISABLE THE AIRBAG SYSTEM BEFORE ATTEMPTING ANY STEERING WHEEL, STEERING COLUMN, OR INSTRUMENT PANEL COMPONENT DIAGNOSIS OR SERVICE. DISCONNECT AND ISOLATE THE BATTERY NEGATIVE (GROUND) CABLE, THEN WAIT TWO MINUTES FOR THE AIRBAG SYSTEM CAPACITOR TO DISCHARGE BEFORE PERFORMING FURTHER DIAGNOSIS OR SERVICE. THIS IS THE ONLY SURE WAY TO DISABLE THE AIRBAG SYSTEM. FAILURE TO TAKE THE PROPER PRECAUTIONS COULD RESULT IN ACCIDENTAL AIRBAG DEPLOYMENT AND POSSIBLE PERSONAL INJURY.

(1) Disconnect and isolate the battery negative cable.

(2) Remove the fuse cover from the bottom of the Junction Block (JB). Refer to **Instrument Panel Fuse Cover** in Body for the location of the fuse cover removal procedures.

(3) Remove the steering column opening cover from the instrument panel. Refer to **Steering Column Opening Cover** in Body for the location of steering column opening cover removal procedures.

(4) Reach behind the JB to disconnect the two instrument panel wire harness connectors from the Body Control Module (BCM) connector receptacles located near the bottom of the JB (Fig. 4).

(5) Reach behind the JB to remove the screw that secures the instrument panel wire harness bulkhead connector to the connector receptacle located near the top of the JB and disconnect the connector.

(6) Disconnect the fused B(+) and the IOD wire harness connectors from the connector receptacles located near the bottom of the JB (Fig. 5).

(7) Remove the screws that secure the right and left body wire harness bulkhead connectors to the connector receptacles located near the center of the JB and disconnect the connectors.

(8) Remove the two screws that secure the JB to the instrument panel steering column support bracket (Fig. 6).

(9) To disengage the two snap clips that secure the top of the JB to the instrument panel steering column support bracket, grasp the bottom of the junction block firmly with both hands and pull it downward sharply.

(10) Remove the JB from the instrument panel steering column support bracket.

JUNCTION BLOCK (Continued)

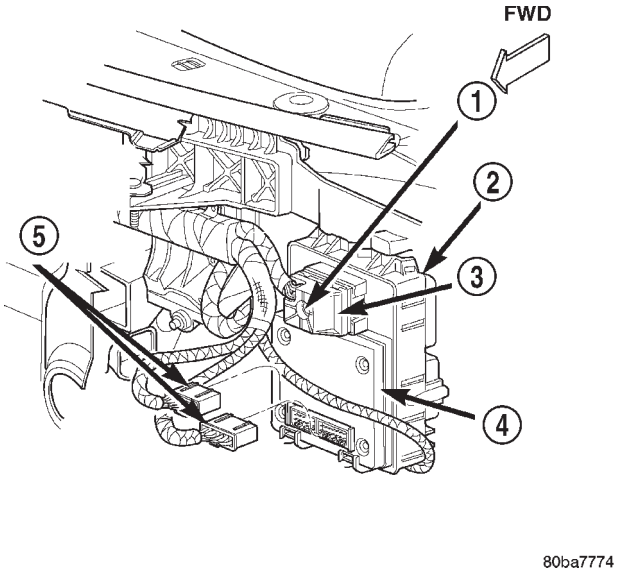

Fig. 4 Junction Block Connections

1 - SCREW
2 - JUNCTION BLOCK
3 - BULKHEAD CONNECTOR
4 - BODY CONTROL MODULE
5 - INSTRUMENT PANEL WIRE HARNESS CONNECTORS

INSTALLATION

WARNING: ON VEHICLES EQUIPPED WITH AIRBAGS, DISABLE THE AIRBAG SYSTEM BEFORE ATTEMPTING ANY STEERING WHEEL, STEERING COLUMN, OR INSTRUMENT PANEL COMPONENT DIAGNOSIS OR SERVICE. DISCONNECT AND ISOLATE THE BATTERY NEGATIVE (GROUND) CABLE, THEN WAIT TWO MINUTES FOR THE AIRBAG SYSTEM CAPACITOR TO DISCHARGE BEFORE PERFORMING FURTHER DIAGNOSIS OR SERVICE. THIS IS THE ONLY SURE WAY TO DISABLE THE AIRBAG SYSTEM. FAILURE TO TAKE THE PROPER PRECAUTIONS COULD RESULT IN ACCIDENTAL AIRBAG DEPLOYMENT AND POSSIBLE PERSONAL INJURY.

NOTE: If the Junction Block (JB) is being replaced with a new unit, be certain to transfer each of the optional fuses, circuit breakers and relays from the faulty JB to the proper cavities of the replacement JB. Refer to Junction Block in Wiring Diagrams for the location of complete circuit diagrams and cavity assignments for the JB. The Body Control Module (BCM) must also be transferred to the new JB. Refer to Body Control Module in Electronic Control Modules for the location of the BCM removal and installation procedures.

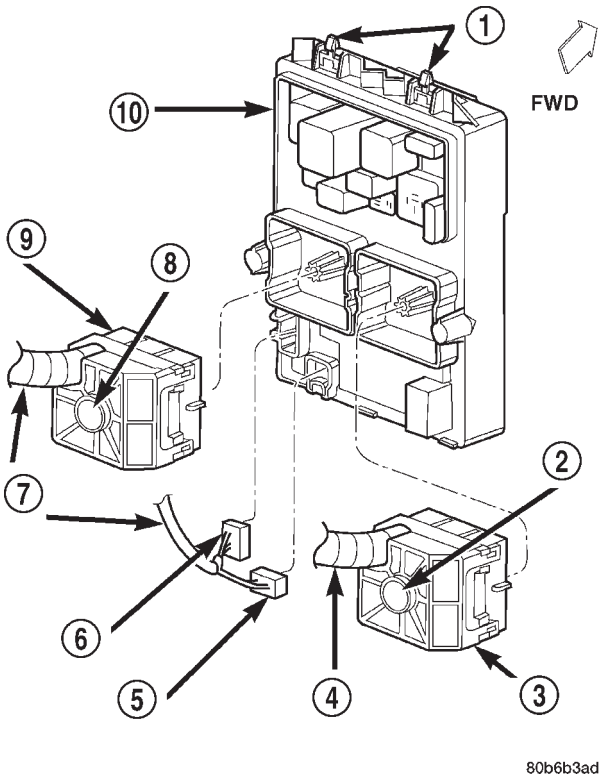

Fig. 5 Junction Block Connections

1 - SNAP CLIPS
2 - SCREW
3 - BULKHEAD CONNECTOR
4 - LEFT BODY WIRE HARNESS
5 - IOD CONNECTOR
6 - FUSED B+ CONNECTOR
7 - RIGHT BODY WIRE HARNESS
8 - SCREW
9 - BULKHEAD CONNECTOR
10 - JUNCTION BLOCK

(1) Position the JB into its mounting location on the instrument panel steering column support bracket.

(2) Align the snap clips at the top of the JB with the mounting holes in the instrument panel steering column support bracket.

(3) Grasp the bottom of the JB firmly with both hands and push it upward sharply to engage the two snap clips that secure the top of the JB to the instrument panel steering column support bracket.

(4) Install and tighten the two screws that secure the JB to the instrument panel steering column support bracket. Tighten the screws to 2.2 N·m (20 in. lbs.).

(5) Reconnect the right and left body wire harness bulkhead connectors to the connector receptacles located near the center of the JB.

(6) Install and tighten the screws that secure the right and left body wire harness bulkhead connectors

JUNCTION BLOCK (Continued)

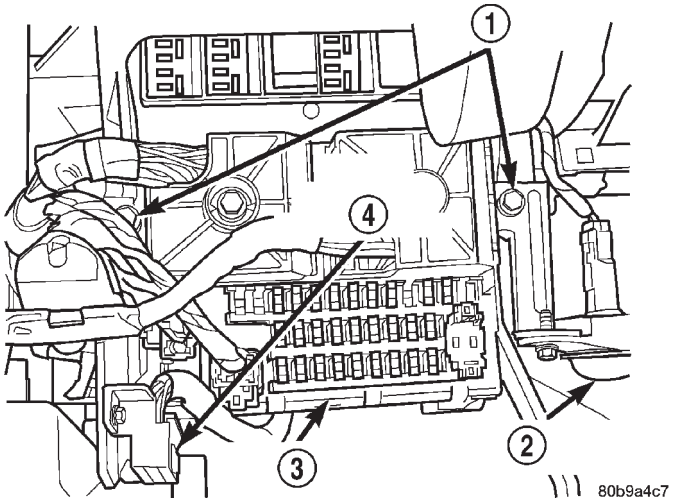

Fig. 6 Junction

1 - SCREW (2)
2 - DRIVER SIDE COURTESY LAMP
3 - JUNCTION BLOCK
4 - 16 WAY DATA LINK CONNECTOR

to the connector receptacles located near the center of the JB. Tighten the screws to 2.2 N·m (20 in. lbs.).

(7) Reconnect the fused B(+) and the IOD wire harness connectors to the connector receptacles located near the bottom of the JB.

(8) Reach behind the JB to reconnect the instrument panel wire harness bulkhead connector to the connector receptacle located near the top of the JB.

(9) Install and tighten the screw that secures the instrument panel wire harness bulkhead connector to the connector receptacle located near the top of the JB. Tighten the screw to 2.2 N·m (20 in. lbs.).

(10) Reach behind the JB to reconnect the two instrument panel wire harness connectors to the BCM connector receptacles located near the bottom of the JB.

(11) Install the steering column opening cover onto the instrument panel. Refer to **Steering Column Opening Cover** in Body for the location of the steering column opening cover installation procedures.

(12) Install the fuse cover onto the bottom of the JB. Refer to **Instrument Panel Fuse Cover** in Body for the location of the fuse cover installation procedures.

(13) Reconnect the battery negative cable.

POWER DISTRIBUTION CENTER

DESCRIPTION

All of the electrical current distributed throughout this vehicle is directed through the standard equipment Power Distribution Center (PDC) (Fig. 7) . The molded plastic PDC housing is located in the right front corner of the engine compartment, between the battery and the right front inner fender shield. The PDC houses up to fifteen maxi-type cartridge fuses, which replace all in-line fusible links. The PDC also houses up to thirteen blade-type mini fuses, and up to ten International Standards Organization (ISO) relays (two standard-type and eight micro-type).

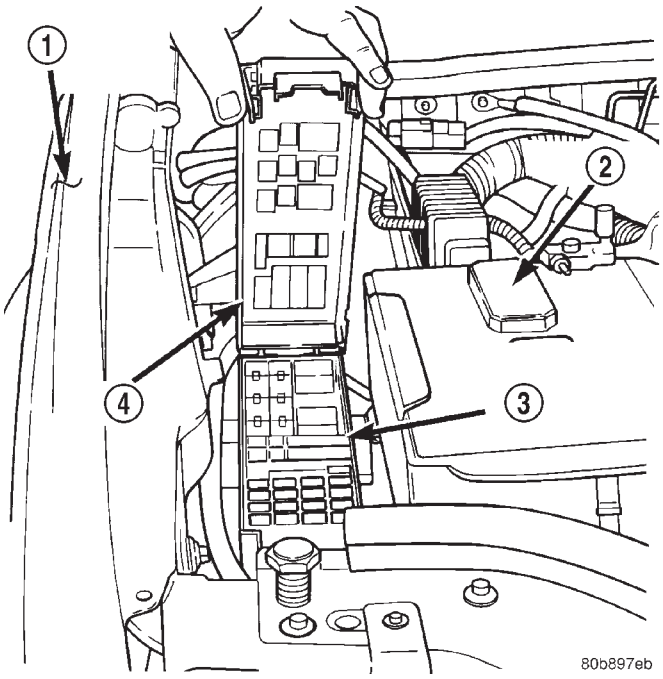

Fig. 7 Power Distribution Center Location

1 - RIGHT FENDER
2 - BATTERY
3 - POWER DISTRIBUTION CENTER
4 - COVER

The PDC housing is secured in the engine compartment at three points. Integral mounts on both sides of the PDC housing engage and latch to stanchions that are integral to the molded plastic battery support. The PDC is integral to the right headlamp and dash wire harness, which exits from the bottom of the PDC housing. The PDC housing has a molded plastic cover that includes two integral latches at the front and pivot hooks at the back that snap over a hinge pin on the rear of the PDC housing. The PDC cover is easily opened or removed for service access and has a convenient fuse and relay layout map integral to the inside surface of the cover to ensure proper component identification. A fuse puller is also stored on the inside of the PDC cover.

The PDC cover, the PDC housing lower cover, the PDC relay wedges, the PDC relay cassettes and the PDC B(+) terminal stud module are available for service replacement. The PDC main housing unit, the

POWER DISTRIBUTION CENTER (Continued)

fuse wedges and the bus bars cannot be repaired and are only serviced as a unit with the right headlamp and dash wire harness. If the PDC main housing unit, fuse wedges or the bus bars are faulty or damaged, the right headlamp and dash wire harness unit must be replaced.

OPERATION

All of the current from the battery and the generator output enters the PDC through two cables and a single two-holed eyelet that is secured with nuts to the two PDC B(+) terminal studs just inside the front end of the PDC housing. The PDC cover is unlatched and opened to access the battery and generator output connection B(+) terminal studs, the fuses or the relays. Internal connection of all of the PDC circuits is accomplished by an intricate combination of hard wiring and bus bars. Refer to **Power Distribution** in Wiring Diagrams for the location of complete PDC circuit diagrams.

REMOVAL

The Power Distribution Center (PDC) main housing unit, the PDC fuse wedges and the PDC bus bars cannot be repaired and are only serviced as a unit with the right headlamp and dash wire harness. If the PDC main housing unit, the fuse wedges or the bus bars are faulty or damaged, the entire PDC and right headlamp and dash wire harness unit must be replaced.

(1) Disconnect and isolate the battery negative cable.

(2) Disconnect each of the right headlamp and dash wire harness connectors. Refer to **Connector Locations** in Wiring Diagrams for the location of more information on the right headlamp and dash wire harness connector locations.

(3) Remove all of the fasteners that secure each of the right headlamp and dash wire harness ground eyelets to the vehicle body and chassis components. Refer to **Connector Locations** in Wiring Diagrams for the location of more information on the ground eyelet locations.

(4) Disengage each of the retainers that secure the right headlamp and dash wire harness to the vehicle body and chassis components. Refer to **Connector Locations** in Wiring Diagrams for the location of more information on the right headlamp and dash wire harness retainer locations.

(5) Unlatch and open the PDC cover.

(6) Remove the two nuts that secure the two-holed eyelet of the battery wire harness PDC take outs to the PDC B(+) terminal studs (Fig. 8).

(7) Remove the battery wire harness PDC take out eyelet from the B(+) terminal studs.

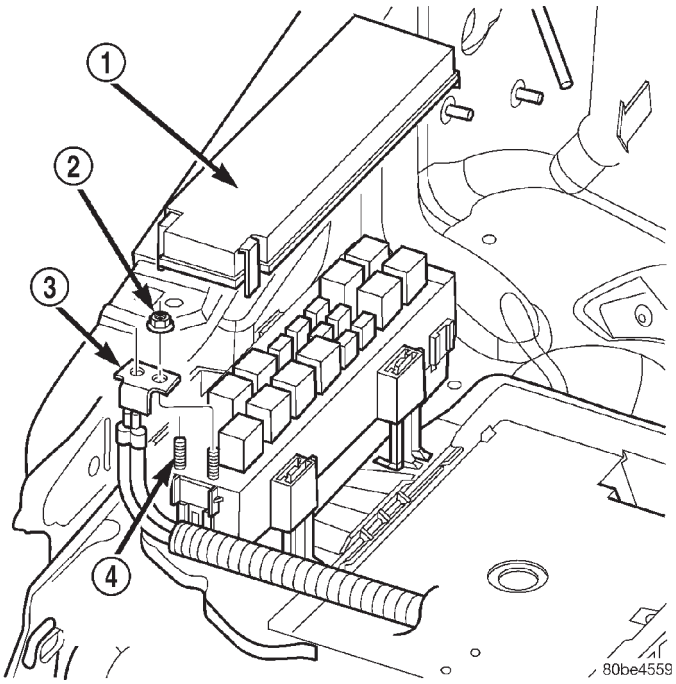

Fig. 8 Power Distribution Center Connections

1 - PDC COVER
2 - NUT (2)
3 - EYELET
4 - B(+) TERMINAL STUDS

(8) Disengage the latches on the PDC housing mounts from the tabs on the PDC mounting stanchions of the battery support, and pull the PDC housing upward to disengage the mounts from the stanchions (Fig. 9).

(9) Remove the PDC and the right headlamp and dash wire harness from the engine compartment as a unit.

PDC & COMPONENTS DISASSEMBLY

PDC HOUSING LOWER COVER

DISASSEMBLY

The Power Distribution Center (PDC) cover, the PDC housing lower cover, the PDC relay wedges, the PDC relay cassettes and the PDC B(+) terminal stud module are available for service replacement. The PDC cover can be simply unlatched and removed from the PDC housing without the PDC being removed or disassembled. Service of the remaining PDC components requires that the PDC be removed from its mounting and disassembled. Refer to **Wiring Repair** in Wiring Diagrams for the location of the wiring repair procedures.

(1) Remove the battery from the battery support. Refer to **Battery System** for the location of the battery removal procedures.

POWER DISTRIBUTION CENTER (Continued)

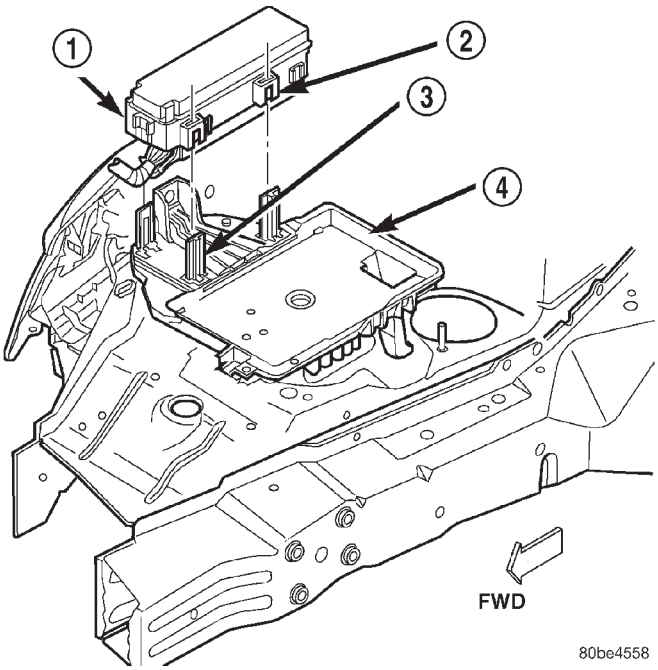

Fig. 9 Power Distribution Center Remove/Install

1 - POWER DISTRIBUTION CENTER
2 - MOUNTS
3 - STANCHIONS (3)
4 - BATTERY SUPPORT

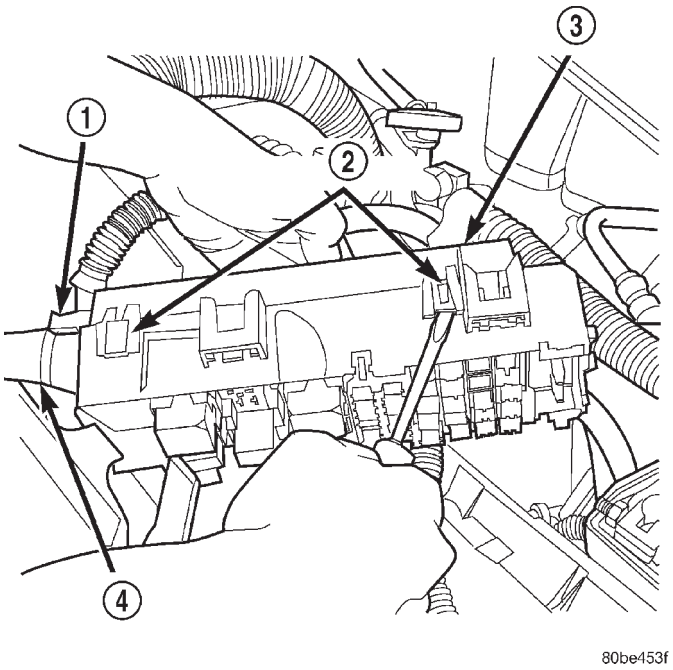

Fig. 10 PDC Housing Lower Cover Remove/Install

1 - TROUGH FORMATION
2 - LATCHES (5)
3 - PDC HOUSING LOWER COVER
4 - WIRE HARNESS

(2) Unlatch and remove the cover from the PDC.

(3) Remove the two nuts that secure the two-holed eyelet of the battery wire harness PDC take out to the B(+) terminal studs near the front of the PDC.

(4) Remove the battery wire harness PDC take out eyelet from the two PDC B(+) terminal studs.

(5) Disengage the latches on the PDC housing mounts from the tabs on the PDC mounting stanchions on the battery support, and pull the PDC housing upward to disengage the mounts from the stanchions.

(6) Where the right headlamp and dash wire harness exits the PDC, remove the tape that secures the wire harness to the trough formation on the PDC housing lower cover.

(7) Using a trim stick or another suitable wide flat-bladed tool, gently pry the latches on each side and the front of the PDC housing that secure the housing lower cover to the PDC and remove the housing lower cover (Fig. 10).

PDC B+ TERMINAL MODULE

DISASSEMBLY

The Power Distribution Center (PDC) cover, the PDC housing lower cover, the PDC relay wedges, the PDC relay cassettes and the PDC B(+) terminal stud module are available for service replacement. The PDC cover can be simply unlatched and removed from the PDC housing without the PDC being removed or disassembled. Service of the remaining PDC components requires that the PDC be removed from its mounting and disassembled. Refer to **Wiring Repair** in Wiring Diagrams for the location of the wiring repair procedures.

(1) Remove the PDC housing lower cover.

(2) From the top of the PDC housing, use a small screwdriver or a terminal pick tool (Special Tool Kit 6680) to release the two latches that secure the B(+) terminal module in the PDC.

(3) Gently and evenly press the two B(+) terminal studs down through the bus bar in the PDC.

(4) From the bottom of the PDC housing, remove the B(+) terminal module from the PDC.

PDC RELAY WEDGE

DISASSEMBLY

The Power Distribution Center (PDC) cover, the PDC housing lower cover, the PDC relay wedges, the PDC relay cassettes and the PDC B(+) terminal stud module are available for service replacement. The PDC cover can be simply unlatched and removed from the PDC housing without the PDC being removed or disassembled. Service of the remaining PDC components requires that the PDC be removed from its mounting and disassembled. Refer to **Wiring**

POWER DISTRIBUTION CENTER (Continued)

Repair in Wiring Diagrams for the location of the wiring repair procedures.

(1) Remove the PDC housing lower cover.

(2) Remove each of the relays from the PDC relay wedge to be removed.

(3) From the bottom of the PDC housing, use a small screwdriver or a terminal pick tool (Special Tool Kit 6680) to release the two latches (yellow) that secure the relay wedge to the PDC relay cassette.

(4) From the top of the PDC housing, remove the relay wedge from the PDC relay cassette (Fig. 11).

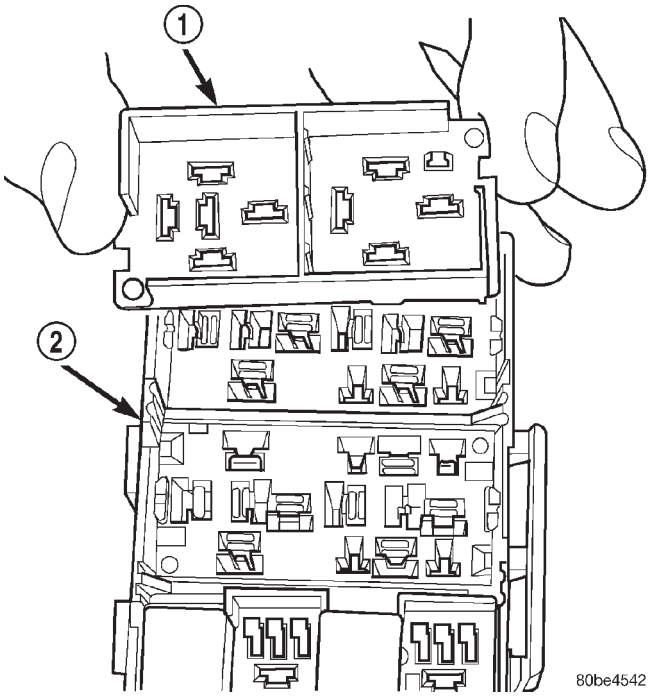

Fig. 11 PDC Relay Wedge Remove/Install

1 - RELAY WEDGE (TYPICAL)
2 - PDC HOUSING
3 - RELAY WEDGE (TYPICAL)
4 - PDC HOUSING

PDC RELAY CASSETTE

DISASSEMBLY

The Power Distribution Center (PDC) cover, the PDC housing lower cover, the PDC relay wedges, the PDC relay cassettes and the PDC B(+) terminal stud module are available for service replacement. The PDC cover can be simply unlatched and removed from the PDC housing without the PDC being removed or disassembled. Service of the remaining PDC components requires that the PDC be removed from its mounting and disassembled. Refer to **Wiring Repair** in Wiring Diagrams for the location of the wiring repair procedures.

(1) Remove the relay wedge from the PDC relay cassette to be removed.

NOTE: It may be necessary to remove relay cassettes that are not being serviced from the PDC housing in order to obtain sufficient clearance to access the faulty relay cassette. The same service procedure is repeated as necessary to remove each of the interfering relay wedges and relay cassettes from the PDC housing.

(2) From the top of the PDC housing, use a small screwdriver or a terminal pick tool (Special Tool Kit 6680) to release the two latches that secure the relay cassette in the PDC (Fig. 12).

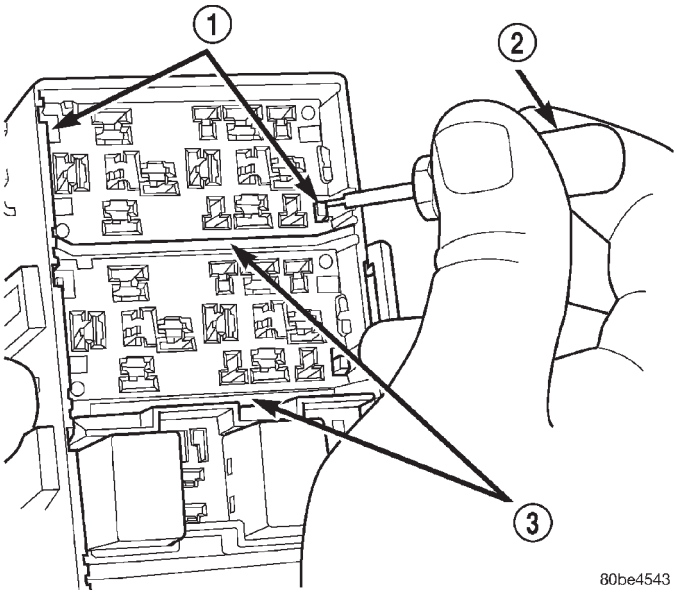

Fig. 12 PDC Relay Cassette Latches

1 - LATCHES
2 - FROM SPECIAL TOOL KIT 6680
3 - PDC RELAY CASSETTES (TYPICAL)
4 - LATCHES
5 - FROM SPECIAL TOOL KIT 6680
6 - PDC RELAY CASSETTES (TYPICAL)

(3) Gently and evenly press the relay cassette down through the PDC housing.

(4) From the bottom of the PDC housing, remove the relay cassette from the PDC (Fig. 13).

CAUTION: Do not remove the wiring and terminals from the terminal cavities of the faulty PDC relay cassette at this time. Refer to the Assembly procedure that follows for the proper procedures for transferring the wiring and terminals to the replacement PDC relay cassette.

POWER DISTRIBUTION CENTER (Continued)

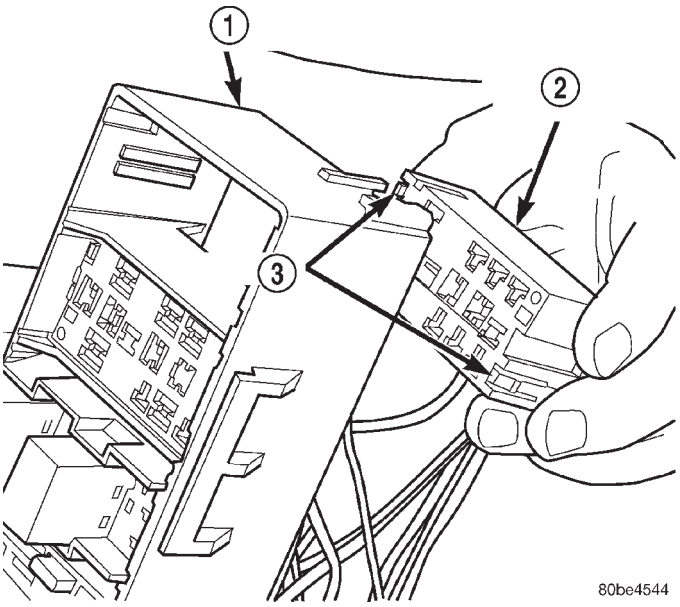

Fig. 13 PDC Relay

1 - PDC HOUSING
2 - PDC RELAY CASSETTE (TYPICAL)
3 - LATCHES
4 - PDC HOUSING
5 - PDC RELAY CASSETTE (TYPICAL)
6 - LATCHES

PDC & COMPONENTS ASSEMBLY

PDC B(+) TERMINAL MODULE

ASSEMBLY

(1) From the bottom of the PDC housing, align and insert the B(+) terminal module into the PDC.

(2) From the bottom of the PDC housing, align and insert the two studs of the PDC B(+) terminal module through the bus bar in the PDC.

(3) From the bottom of the PDC housing, press the B(+) terminal module gently and evenly into the PDC until both of the latches are fully engaged.

(4) Install the PDC housing lower cover.

RELAY WEDGE

ASSEMBLY

(1) From the top of the PDC housing, align and insert the PDC relay wedge latch arms into the correct cavities in the relay cassette.

(2) Gently and evenly press the PDC relay wedge down into the relay cassette until both of the latches are fully engaged.

(3) Install each of the removed relays into the proper cavities of the PDC relay wedge.

(4) Install the PDC housing lower cover.

RELAY CASSETTE

ASSEMBLY

(1) Move the faulty PDC relay cassette with its wiring away from the bottom of the PDC housing far enough to allow the replacement relay cassette to be installed into the PDC.

(2) Using the faulty relay cassette as a guide, be certain that the replacement relay cassette is correctly oriented before installing it into the PDC housing.

(3) From the bottom of the PDC housing, align and insert the replacement relay cassette into the PDC. Press the relay cassette up into the PDC until both of the latches are fully engaged.

CAUTION: Proper care must be taken to be certain that the wiring and terminals from the faulty PDC relay cassette are installed in the correct terminal cavities of the replacement relay cassette. To prevent mistakes it is recommended that the wiring and terminals be removed from the faulty relay cassette one cavity at a time, repaired or spliced as necessary, then installed securely into the correct cavity of the replacement relay cassette. If you are not absolutely certain into which cavity a terminal should be installed, refer to Power Distribution in the index of this service manual for the location of complete circuit diagrams covering the PDC.

(4) While pulling gently on the wire from the bottom of the faulty PDC relay cassette, use a terminal pick tool (Special Tool Kit 6680) from the top of the relay cassette to release the latch that secures the terminal in the relay cassette terminal cavity (Fig. 14).

(5) From the bottom of the faulty PDC relay cassette, remove the wire and terminal from the relay cassette terminal cavity.

(6) Make all necessary repairs and splices to the wire for the removed terminal. Refer to **Wiring Repair** in Wiring Diagrams for the location of the wiring repair procedures.

(7) From the bottom of the PDC housing, align and insert the removed wire and terminal into the correct terminal cavity of the replacement relay cassette. Push the wire and terminal up into the relay cassette terminal cavity until it is fully engaged by the latch.

(8) Repeat Step 4, Step 5, Step 6 and Step 7 one wire and terminal at a time until each of the wires and terminals have been transferred from the faulty PDC relay cassette into the replacement relay cassette.

(9) Install the PDC relay wedge into the replacement PDC relay cassette.

POWER DISTRIBUTION CENTER (Continued)

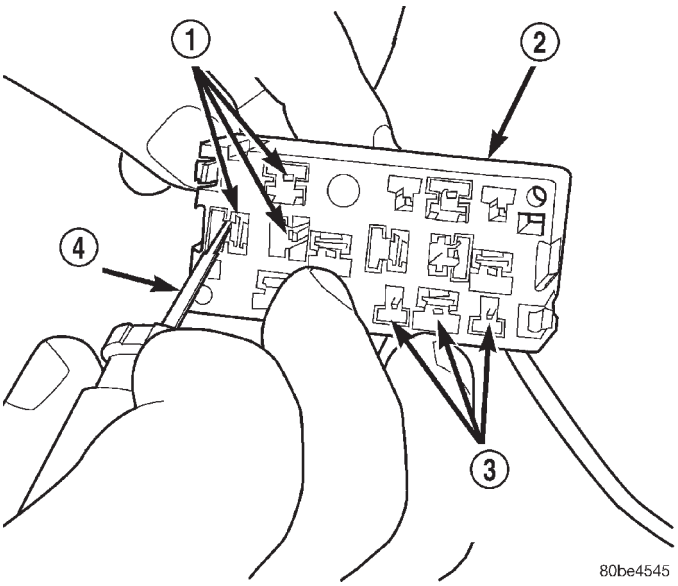

Fig. 14 PDC Relay Cassette Terminal Remove/Install

1 - TERMINAL CAVITIES (TYPICAL)
2 - PDC RELAY CASSETTE (TYPICAL)
3 - TERMINAL LATCHES (TYPICAL)
4 - FROM SPECIAL TOOL KIT 6680
5 - TERMINAL CAVITIES (TYPICAL)
6 - PDC RELAY CASSETTE (TYPICAL)
7 - TERMINAL LATCHES (TYPICAL)
8 - FROM SPECIAL TOOL KIT 6680

PDC LOWER COVER

ASSEMBLY

(1) Align the PDC housing lower cover on the bottom of the PDC.

(2) Evenly press the lower cover into place until latches are fully engaged.

(3) Where the right headlamp and dash harness enters the PDC, tape the harness securely to the trough formation on the PDC lower cover.

(4) Install the PDC in its mounting location on the battery support.

(5) Install the battery wire harness over the two PDC B+ terminal studs. Torque the nuts to 11.3 N·m (100 in. lbs.).

(6) Install the battery. Refer to Battery System for the procedure.

(7) Install the PDC cover.

INSTALLATION

The Power Distribution Center (PDC) main housing unit, the PDC fuse wedges and the PDC bus bars cannot be repaired and are only serviced as a unit with the right headlamp and dash wire harness. If the PDC main housing unit, the fuse wedges or the bus bars are faulty or damaged, the entire PDC and right headlamp and dash wire harness unit must be replaced.

(1) Position the PDC and the right headlamp and dash wire harness unit in the engine compartment.

(2) Engage the PDC housing mounts with the stanchions of the battery support and push the unit downward until the mount latches fully engage the mounting tabs on the stanchions.

(3) Install the two-holed eyelet of the battery wire harness PDC take outs onto the two PDC B(+) terminal studs.

(4) Install and tighten the nuts that secure the eyelet of the battery wire harness PDC take outs to the B(+) terminal studs. Tighten the nuts to 11.3 N·m (100 in. lbs.).

(5) Engage each of the retainers that secure the right headlamp and dash wire harness to the vehicle body and chassis components. Refer to **Connector Locations** in Wiring Diagrams for the location of more information on the right headlamp and dash wire harness retainer locations.

(6) Install all of the fasteners that secure each of the right headlamp and dash wire harness ground eyelets to the vehicle body and chassis components. Refer to **Connector Locations** in Wiring Diagrams for the location of more information on the ground eyelet locations.

(7) Reconnect each of the right headlamp and dash wire harness connectors. Refer to **Connector Locations** in Wiring Diagrams for the location of more information on the right headlamp and dash wire harness connector locations. For connectors secured with screws, tighten the screws to 4.3 N·m (38 in. lbs.).

(8) Reconnect the battery negative cable.

POWER OUTLET

DESCRIPTION - FRONT POWER OUTLET

An accessory power outlet is standard equipment on this model. The power outlet is installed in the instrument panel center lower bezel, which is located near the bottom of the instrument panel center stack area, below the heater and air conditioner controls. The power outlet base is secured by a snap fit within the center lower bezel. A hinged door with an over-center spring flips closed to conceal and protect the power outlet base when the power outlet is not being used, and flips open below the center lower bezel while the power outlet is in use.

The power outlet receptacle unit and the power outlet door are each available for service replacement.

POWER OUTLET (Continued)

DESCRIPTION - REAR POWER OUTLET

A rear accessory power outlet is optional equipment on this model. The rear power outlet is installed in the lower right quarter trim panel near the right liftgate opening pillar in the cargo area of the vehicle. The power outlet base and mount are secured by a snap fit within the quarter trim panel. A plastic protective cap snaps into the power outlet base when the power outlet is not being used, and hangs from the power outlet base mount by an integral bail strap while the power outlet is in use. While the power outlet is very similar to a cigar lighter base unit, it does not include the two small spring-clip retainers inside the bottom of the receptacle shell that are used to secure the cigar lighter heating element to the insulated contact.

The power outlet receptacle unit and the accessory power outlet protective cap are available for service. The power outlet receptacle cannot be repaired and, if faulty or damaged, it must be replaced.

OPERATION - FRONT POWER OUTLET

The power outlet base or receptacle shell is connected to ground, and an insulated contact in the bottom of the shell is connected to battery current. The power outlet receives battery voltage from a fuse in the junction block at all times.

While the power outlet is very similar to a cigar lighter base unit, it does not include the two small spring-clip retainers inside the bottom of the receptacle shell that are used to secure the cigar lighter heating element to the insulated contact.

OPERATION - REAR POWER OUTLET

The power outlet base or receptacle shell is connected to ground, and an insulated contact in the bottom of the shell is connected to battery current. The power outlet receives battery voltage from a fuse in the Power Distribution Center (PDC) through a fuse in the Junction Block (JB) at all times. Refer to **Horn/Cigar Lighter/Power Outlet** in Wiring Diagrams for the location of complete rear power outlet circuit diagrams.

DIAGNOSIS & TESTING - FRONT POWER OUTLET

For complete circuit diagrams, refer to **Horn/Cigar Lighter/Power Outlet** in Wiring Diagrams.

WARNING: ON VEHICLES EQUIPPED WITH AIRBAGS, REFER TO RESTRAINTS BEFORE ATTEMPTING ANY STEERING WHEEL, STEERING COLUMN, OR INSTRUMENT PANEL COMPONENT DIAGNOSIS OR SERVICE. FAILURE TO TAKE THE PROPER PRECAUTIONS COULD RESULT IN ACCIDENTAL AIRBAG DEPLOYMENT AND POSSIBLE PERSONAL INJURY.

(1) Check the fused B(+) fuse in the junction block. If OK, go to Step 2. If not OK, repair the shorted circuit or component as required and replace the faulty fuse.

(2) Check for battery voltage at the fused B(+) fuse in the junction block. If OK, go to Step 3. If not OK, repair the open fused B(+) circuit to the Power Distribution Center (PDC) fuse as required.

(3) Open the power outlet door. Check for continuity between the inside circumference of the power outlet receptacle and a good ground. There should be continuity. If OK, go to Step 4. If not OK, go to Step 5.

(4) Check for battery voltage at the insulated contact located at the back of the power outlet receptacle. If not OK, go to Step 5.

(5) Disconnect and isolate the battery negative cable. Remove the instrument panel center lower bezel. Check for continuity between the ground circuit cavity of the power outlet wire harness connector and a good ground. There should be continuity. If OK, go to Step 6. If not OK, repair the open ground circuit to ground as required.

(6) Connect the battery negative cable. Check for battery voltage at the fused B(+) circuit cavity of the power outlet wire harness connector. If OK, replace the faulty power outlet receptacle. If not OK, repair the open fused B(+) circuit to the junction block fuse as required.

DIAGNOSIS & TESTING - REAR POWER OUTLET

Refer to **Horn/Cigar Lighter/Power Outlet** in Wiring Diagrams for the location of complete rear power outlet circuit diagrams.

WARNING: ON VEHICLES EQUIPPED WITH AIRBAGS, DISABLE THE AIRBAG SYSTEM BEFORE ATTEMPTING ANY STEERING WHEEL, STEERING COLUMN, OR INSTRUMENT PANEL COMPONENT DIAGNOSIS OR SERVICE. DISCONNECT AND ISOLATE THE BATTERY NEGATIVE (GROUND) CABLE, THEN WAIT TWO MINUTES FOR THE AIRBAG SYSTEM CAPACITOR TO DISCHARGE BEFORE PERFORMING FURTHER DIAGNOSIS OR SERVICE. THIS IS THE ONLY SURE WAY TO DISABLE THE AIRBAG SYSTEM. FAILURE TO TAKE THE PROPER PRECAUTIONS COULD RESULT IN ACCIDENTAL AIRBAG DEPLOYMENT AND POSSIBLE PERSONAL INJURY.

(1) Check the fused B(+) fuse in the Junction Block (JB). If OK, go to Step 2. If not OK, repair the

POWER OUTLET (Continued)

shorted circuit or component as required and replace the faulty fuse.

(2) Check for battery voltage at the fused B(+) fuse in the JB. If OK, go to Step 3. If not OK, repair the open fused B(+) circuit to the Power Distribution Center (PDC) as required.

(3) Remove the plastic protective cap from the rear power outlet receptacle. Check for continuity between the inside circumference of the rear power outlet receptacle and a good ground. There should be continuity. If OK, go to Step 4. If not OK, go to Step 5.

(4) Check for battery voltage at the insulated contact located at the back of the rear power outlet receptacle. If not OK, go to Step 5.

(5) Disconnect and isolate the battery negative cable. Remove the rear power outlet from the right quarter trim panel. Check for continuity between the ground circuit cavity of the rear power outlet wire harness connector and a good ground. There should be continuity. If OK, go to Step 6. If not OK, repair the open ground circuit to ground as required.

(6) Connect the battery negative cable. Check for battery voltage at the fused B(+) circuit cavity of the rear power outlet wire harness connector. If OK, replace the faulty rear power outlet receptacle base. If not OK, repair the open fused B(+) circuit to the JB fuse as required.

REMOVAL - FRONT POWER OUTLET

WARNING: ON VEHICLES EQUIPPED WITH AIRBAGS, REFER TO RESTRAINTS BEFORE ATTEMPTING ANY STEERING WHEEL, STEERING COLUMN, OR INSTRUMENT PANEL COMPONENT DIAGNOSIS OR SERVICE. FAILURE TO TAKE THE PROPER PRECAUTIONS COULD RESULT IN ACCIDENTAL AIRBAG DEPLOYMENT AND POSSIBLE PERSONAL INJURY.

(1) Disconnect and isolate the battery negative cable.

(2) Remove the center lower bezel from the instrument panel. Refer to **Instrument Panel Center Lower Bezel** in Body for the procedure.

(3) Pull the cigar lighter knob and element or the protective cap out of the cigar lighter receptacle base, or open the power outlet door in the instrument panel center lower bezel.

(4) Look inside the cigar lighter or power outlet receptacle base and note the position of the rectangular retaining bosses of the mount that secures the receptacle base to the instrument panel center lower bezel (Fig. 15).

(5) Insert a pair of external snap ring pliers into the cigar lighter or power outlet receptacle base and engage the tips of the pliers with the retaining bosses of the mount.

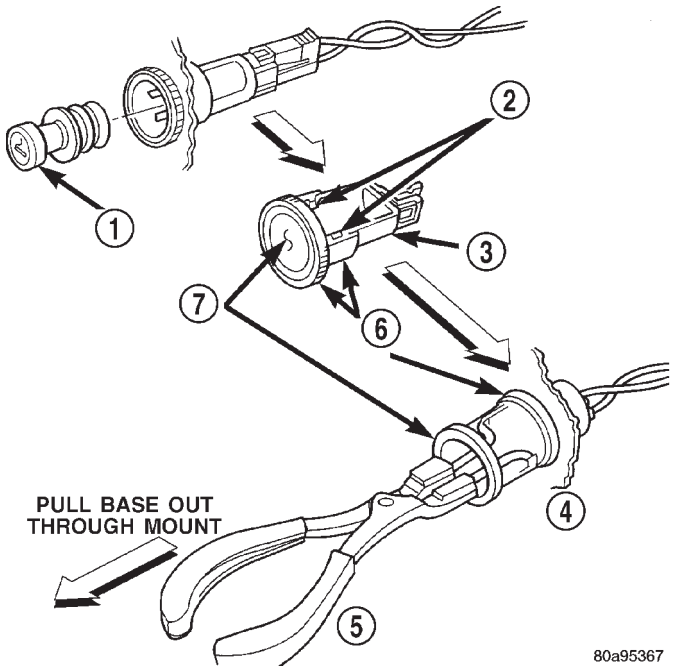

Fig. 15 Cigar Lighter and Power Outlet Remove/ Install - Typical

1 - KNOB AND ELEMENT
2 - RETAINING BOSSES-ENGAGE PLIERS HERE
3 - BASE
4 - PARTIALLY REMOVED
5 - EXTERNAL SNAP-RING PLIERS
6 - MOUNT
7 - BASE

(6) Squeeze the pliers to disengage the mount retaining bosses from the receptacle base and, using a gentle rocking motion, pull the pliers and the receptacle base out of the mount.

(7) Remove the cigar lighter or power outlet mount from the instrument panel center lower bezel.

REMOVAL - REAR POWER OUTLET

WARNING: ON VEHICLES EQUIPPED WITH AIRBAGS, DISABLE THE AIRBAG SYSTEM BEFORE ATTEMPTING ANY STEERING WHEEL, STEERING COLUMN, OR INSTRUMENT PANEL COMPONENT DIAGNOSIS OR SERVICE. DISCONNECT AND ISOLATE THE BATTERY NEGATIVE (GROUND) CABLE, THEN WAIT TWO MINUTES FOR THE AIRBAG SYSTEM CAPACITOR TO DISCHARGE BEFORE PERFORMING FURTHER DIAGNOSIS OR SERVICE. THIS IS THE ONLY SURE WAY TO DISABLE THE AIRBAG SYSTEM. FAILURE TO TAKE THE PROPER PRECAUTIONS COULD RESULT IN ACCIDENTAL AIRBAG DEPLOYMENT AND POSSIBLE PERSONAL INJURY.

POWER OUTLET (Continued)

(1) Disconnect and isolate the battery negative cable.

(2) Pull the protective cap out of the rear power outlet receptacle base (Fig. 16).

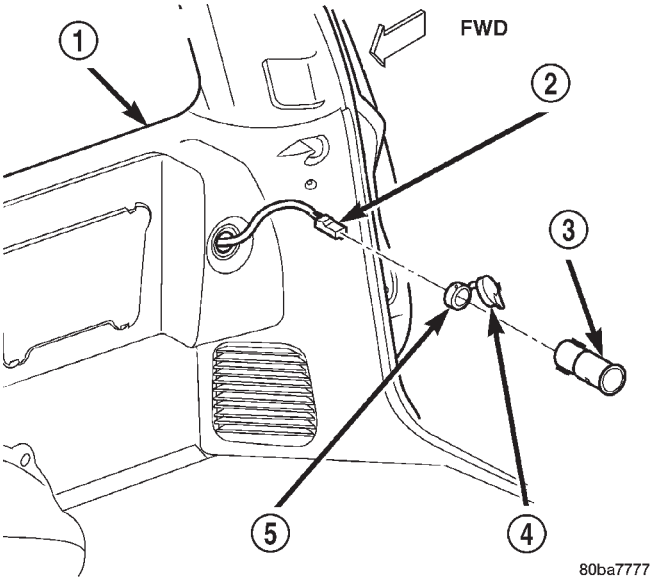

Fig. 16 Rear Power Outlet Remove/Install

1 - RIGHT QUARTER TRIM PANEL
2 - RIGHT BODY WIRE HARNESS CONNECTOR
3 - RECEPTACLE BASE
4 - PROTECTIVE CAP
5 - MOUNT

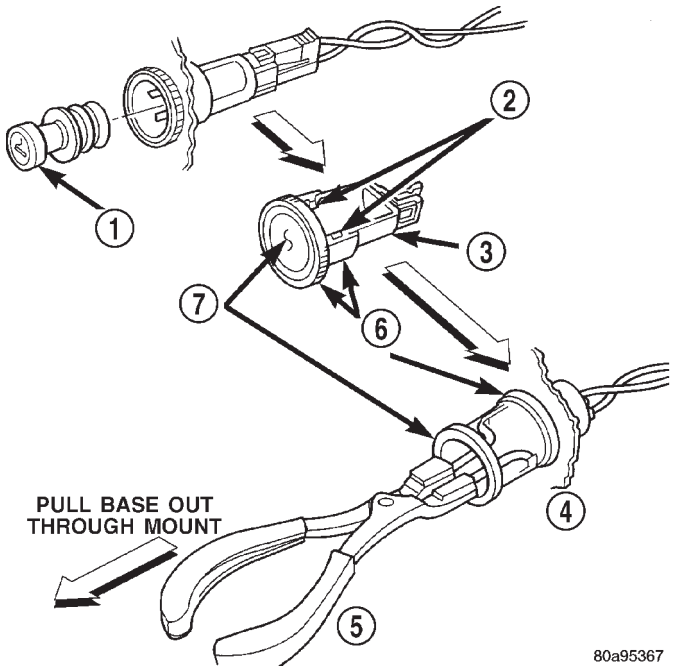

Fig. 17 Power Outlet Remove/Install - Typical

1 - KNOB AND ELEMENT
2 - RETAINING BOSSES-ENGAGE PLIERS HERE
3 - BASE
4 - PARTIALLY REMOVED
5 - EXTERNAL SNAP-RING PLIERS
6 - MOUNT
7 - BASE

(3) Look inside the rear power outlet receptacle base and note the position of the rectangular retaining bosses of the mount that secures the receptacle base to the right quarter trim panel (Fig. 17).

(4) Insert a pair of external snap ring pliers into the rear power outlet receptacle base and engage the tips of the pliers with the retaining bosses of the mount.

(5) Squeeze the pliers to disengage the mount retaining bosses from the receptacle base and, using a gentle rocking motion, pull the pliers and the receptacle base out of the mount.

(6) Pull the rear power outlet receptacle base away from the right quarter trim panel far enough to access the wire harness connector.

(7) Disconnect the right body wire harness connector from the rear power outlet receptacle base connector receptacle.

(8) Remove the rear power outlet mount from the right quarter trim panel.

INSTALLATION - FRONT POWER OUTLET

WARNING: ON VEHICLES EQUIPPED WITH AIRBAGS, REFER TO RESTRAINTS BEFORE ATTEMPTING ANY STEERING WHEEL, STEERING COLUMN, OR INSTRUMENT PANEL COMPONENT DIAGNOSIS OR SERVICE. FAILURE TO TAKE THE PROPER PRECAUTIONS COULD RESULT IN ACCIDENTAL AIRBAG DEPLOYMENT AND POSSIBLE PERSONAL INJURY.

(1) Install the cigar lighter or power outlet mount into the instrument panel center lower bezel.

(2) Align the splines on the outside of the cigar lighter or power outlet receptacle base connector receptacle with the grooves on the inside of the mount.

(3) Press firmly on the cigar lighter or power outlet receptacle base until the retaining bosses of the mount are fully engaged in their receptacles.

(4) Install the cigar lighter knob and element or the protective cap into the cigar lighter receptacle base, or close the power outlet door in the instrument panel center lower bezel.

(5) Install the center lower bezel onto the instrument panel. Refer to **Instrument Panel Center Lower Bezel** in Body for the procedure.

(6) Reconnect the battery negative cable.

POWER OUTLET (Continued)

INSTALLATION - REAR POWER OUTLET

WARNING: ON VEHICLES EQUIPPED WITH AIRBAGS, DISABLE THE AIRBAG SYSTEM BEFORE ATTEMPTING ANY STEERING WHEEL, STEERING COLUMN, OR INSTRUMENT PANEL COMPONENT DIAGNOSIS OR SERVICE. DISCONNECT AND ISOLATE THE BATTERY NEGATIVE (GROUND) CABLE, THEN WAIT TWO MINUTES FOR THE AIRBAG SYSTEM CAPACITOR TO DISCHARGE BEFORE PERFORMING FURTHER DIAGNOSIS OR SERVICE. THIS IS THE ONLY SURE WAY TO DISABLE THE AIRBAG SYSTEM. FAILURE TO TAKE THE PROPER PRECAUTIONS COULD RESULT IN ACCIDENTAL AIRBAG DEPLOYMENT AND POSSIBLE PERSONAL INJURY.

(1) Align the splines on the outside of the rear power outlet receptacle base connector receptacle with the grooves on the inside of the mount.

(2) Insert the rear power outlet receptacle base about half way through the mount.

(3) Reconnect the right body wire harness connector to the rear power outlet receptacle base connector receptacle.

(4) Insert the rear power outlet receptacle base and mount into the right quarter trim panel as a unit until the mount is seated flush against the trim panel.

(5) Press firmly on the rear power outlet receptacle base until the retaining bosses of the mount are fully engaged in their receptacles.

(6) Install the protective cap into the rear power outlet receptacle base.

(7) Reconnect the battery negative cable.

POWER OUTLET RELAY

DESCRIPTION

The power outlet / cigar lighter relay is an electromechanical device that switches fused battery current to the cigar lighter or power outlet when the ignition switch is turned to the Accessory or On positions. The power outlet / cigar lighter relay is located in the junction block, below the driver side of the instrument panel in the passenger compartment.

The cigar lighter relay is a International Standards Organization (ISO) relay. Relays conforming to the ISO specifications have common physical dimensions, current capacities, terminal patterns, and terminal functions.

The cigar lighter relay cannot be repaired or adjusted and, if faulty or damaged, it must be replaced.

OPERATION

The ISO relay consists of an electromagnetic coil, a resistor or diode, and three (two fixed and one movable) electrical contacts. The movable (common feed) relay contact is held against one of the fixed contacts (normally closed) by spring pressure. When the electromagnetic coil is energized, it draws the movable contact away from the normally closed fixed contact, and holds it against the other (normally open) fixed contact.

When the electromagnetic coil is de-energized, spring pressure returns the movable contact to the normally closed position. The resistor or diode is connected in parallel with the electromagnetic coil in the relay, and helps to dissipate voltage spikes that are produced when the coil is de-energized.

DIAGNOSIS & TESTING - POWER OUTLET RELAY

The power outlet / cigar lighter relay (Fig. 18) is located in the junction block, below the driver side end of the instrument panel in the passenger compartment. For complete circuit diagrams, refer to **Horn/Cigar Lighter/Power Outlet** in Wiring Diagrams.

WARNING: ON VEHICLES EQUIPPED WITH AIRBAGS, REFER TO RESTRAINTS BEFORE ATTEMPTING ANY STEERING WHEEL, STEERING COLUMN, OR INSTRUMENT PANEL COMPONENT DIAGNOSIS OR SERVICE. FAILURE TO TAKE THE PROPER PRECAUTIONS COULD RESULT IN ACCIDENTAL AIRBAG DEPLOYMENT AND POSSIBLE PERSONAL INJURY.

(1) Remove the power outlet / cigar lighter relay from the junction block. Refer to **Power Outlet Relay** in the Removal and Installation section of this group for the procedure.

(2) A relay in the de-energized position should have continuity between terminals 87A and 30, and no continuity between terminals 87 and 30. If OK, go to Step 3. If not OK, replace the faulty relay.

(3) Resistance between terminals 85 and 86 (electromagnet) should be 75 ± 5 ohms. If OK, go to Step 4. If not OK, replace the faulty relay.

(4) Connect a battery to terminals 85 and 86. There should now be continuity between terminals 30 and 87, and no continuity between terminals 87A and 30. If OK, perform the Relay Circuit Test that follows. If not OK, replace the faulty relay.

DIAGNOSIS & TESTING - RELAY CIRCUIT TEST

(1) The relay common feed terminal cavity (30) of the junction block is connected to battery voltage and should be hot at all times. Check for battery voltage

POWER OUTLET RELAY (Continued)

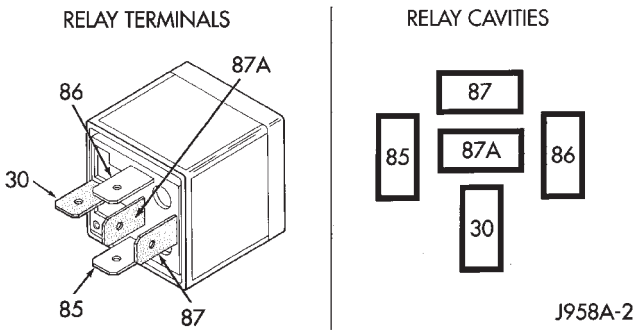

Fig. 18 Cigar Lighter Relay

TERMINAL LEGEND

NUMBER	IDENTIFICATION
30	COMMON FEED
85	COIL GROUND
86	COIL BATTERY
87	NORMALLY OPEN
87A	NORMALLY CLOSED

at the fused B(+) circuit cavity in the junction block receptacle for the cigar lighter relay. If OK, go to Step 2. If not OK, repair the fused B(+) circuit to the Power Distribution Center (PDC) fuse as required.

(2) The relay normally closed terminal (87A) is connected to terminal 30 in the de-energized position, but is not used for this application. Go to Step 3.

(3) The relay normally open terminal (87) is connected to the common feed terminal (30) in the energized position. This terminal supplies battery voltage to the fused B(+) fuse in the junction block that feeds the cigar lighter when the relay is energized by the ignition switch. There should be continuity between the junction block cavity for relay terminal 87 and the fused B(+) fuse in the junction block at all times. If OK, go to Step 4. If not OK, repair the open fused B(+) circuit to the junction block fuse as required.

(4) The coil ground terminal (85) is connected to the electromagnet in the relay. It receives battery feed to energize the cigar lighter relay when the ignition switch is in the Accessory or On positions. Turn the ignition switch to the On position. Check for battery voltage at the fused ignition switch output (acc/run) circuit cavity for relay terminal 85 in the junction block receptacle for the cigar lighter relay. If OK, go to Step 5. If not OK, repair the open fused ignition switch output (acc/run) circuit to the ignition switch as required.

(5) The coil battery terminal (86) is connected to the electromagnet in the relay. The junction block cavity for this terminal should have continuity to ground at all times. If not OK, repair the open ground circuit to ground as required.

REMOVAL

WARNING: ON VEHICLES EQUIPPED WITH AIRBAGS, REFER TO RESTRAINTS BEFORE ATTEMPTING ANY STEERING WHEEL, STEERING COLUMN, OR INSTRUMENT PANEL COMPONENT DIAGNOSIS OR SERVICE. FAILURE TO TAKE THE PROPER PRECAUTIONS COULD RESULT IN ACCIDENTAL AIRBAG DEPLOYMENT AND POSSIBLE PERSONAL INJURY.

(1) Disconnect and isolate the battery negative cable.

(2) Remove the steering column opening cover from the instrument panel. Refer to **Steering Column Opening Cover** in Body for the procedure.

(3) The power outlet / cigar lighter relay is located on the left side of the combination flasher in the junction block.

(4) Remove the power outlet / cigar lighter relay from the junction block.

INSTALLATION

WARNING: ON VEHICLES EQUIPPED WITH AIRBAGS, REFER TO RESTRAINTS BEFORE ATTEMPTING ANY STEERING WHEEL, STEERING COLUMN, OR INSTRUMENT PANEL COMPONENT DIAGNOSIS OR SERVICE. FAILURE TO TAKE THE PROPER PRECAUTIONS COULD RESULT IN ACCIDENTAL AIRBAG DEPLOYMENT AND POSSIBLE PERSONAL INJURY.

(1) Position the power outlet / cigar lighter relay in the proper receptacle in the junction block.

(2) Align the power outlet / cigar lighter relay terminals with the terminal cavities in the junction block receptacle.

(3) Push in firmly on the power outlet / cigar lighter relay until the terminals are fully seated in the terminal cavities in the junction block receptacle.

(4) Install the steering column opening cover onto the instrument panel. Refer to **Steering Column Opening Cover** in Body for the procedure.

(5) Reconnect the battery negative cable.

IGNITION-OFF DRAW WIRE HARNESS CONNECTOR

DESCRIPTION

All vehicles are equipped with an Ignition-Off Draw (IOD) connector that is located in a molded

IGNITION-OFF DRAW WIRE HARNESS CONNECTOR (Continued)

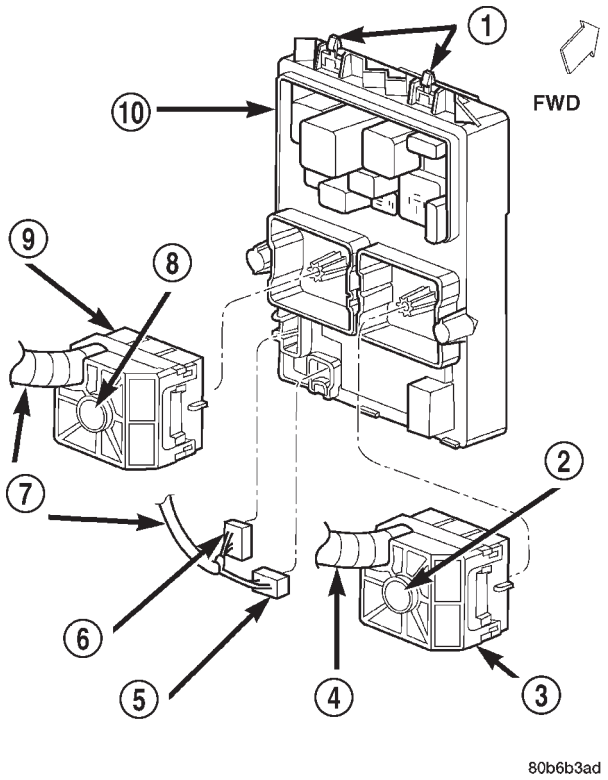

Fig. 19 Ignition-Off Draw Connector

1 - SNAP CLIPS
2 - SCREW
3 - BULKHEAD CONNECTOR
4 - LEFT BODY WIRE HARNESS
5 - IOD CONNECTOR
6 - FUSED B+ CONNECTOR
7 - RIGHT BODY WIRE HARNESS
8 - SCREW
9 - BULKHEAD CONNECTOR
10 - JUNCTION BLOCK

connector receptacle on the lower rear surface of the Junction Block (JB) housing (Fig. 19). The JB is concealed above the molded plastic instrument panel fuse cover. Integral latches molded into the fuse cover secure it the JB, the Body Control Module (BCM) and the 16-way data link connector tab of the instrument panel steering column support bracket. The fuse cover can be pulled downward to disengage the latches and provide service access to all of the fuses, relays and wire harness connectors of the JB. Refer to **Instrument Panel Fuse Cover** in the index of this service manual for the location of additional service information covering the fuse cover.

OPERATION

The term ignition-off draw identifies a normal condition where power is being drained from the battery with the ignition switch in the Off position. The IOD connector feeds the memory and sleep mode functions for some of the electronic modules in the vehicle as well as various other accessories that require battery current when the ignition switch is in the Off position, including the clock.

The IOD connector can be used by the vehicle owner as a convenient means of reducing battery depletion when a vehicle is to be stored for periods not to exceed about twenty days (short-term storage). Simply disconnect the IOD connector from the JB receptacle. However, it must be remembered that disconnecting the IOD connector will not eliminate IOD, but only reduce this normal condition. When a vehicle will not be used for more than twenty days, but less than thirty days, remove the IOD fuse from the Power Distribution Center (PDC). If a vehicle will be stored for more than about thirty days, the battery negative cable should be disconnected to eliminate normal IOD; and, the battery should be tested and recharged at regular intervals during the vehicle storage period to prevent the battery from becoming discharged or damaged. Refer to **Ignition-Off Draw Fuse** and **Battery** in the index in this service manual for the location of additional service information covering the ignition-off draw fuse and the battery.

FUSE COVER

REMOVAL

WARNING: ON VEHICLES EQUIPPED WITH AIRBAGS, REFER TO RESTRAINTS BEFORE ATTEMPTING ANY STEERING WHEEL, STEERING COLUMN, OR INSTRUMENT PANEL COMPONENT DIAGNOSIS OR SERVICE. FAILURE TO TAKE THE PROPER PRECAUTIONS COULD RESULT IN ACCIDENTAL AIRBAG DEPLOYMENT AND POSSIBLE PERSONAL INJURY.

(1) Disconnect and isolate the battery negative cable.

(2) Pull down on the rear edge (nearest the rear of the vehicle) of the instrument panel fuse cover until the rear latches unsnap from the tabs on the lower junction block housing and the side latch unsnaps from the tab on the instrument panel steering column support bracket outboard of the 16-way data link connector (Fig. 20).

(3) Move the instrument panel fuse cover towards the front of the vehicle to disengage the front latches from the mounting slots in the lower housing of the body control module.

(4) Remove the fuse cover from under the instrument panel.

FUSE COVER (Continued)

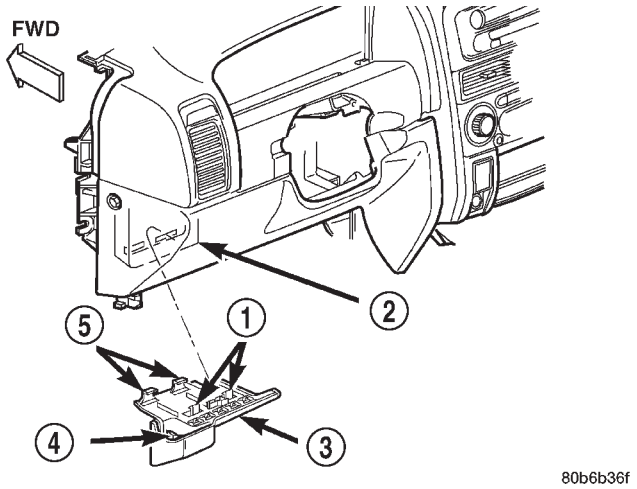

Fig. 20 Instrument Panel Fuse Cover Remove/Install

1 - REAR LATCHES
2 - JUNCTION BLOCK AND BODY CONTROL MODULE UNIT
3 - INSTRUMENT PANEL FUSE COVER
4 - SIDE LATCH
5 - FRONT LATCHES

INSTALLATION

WARNING: ON VEHICLES EQUIPPED WITH AIRBAGS, REFER TO RESTRAINTS BEFORE ATTEMPTING ANY STEERING WHEEL, STEERING COLUMN, OR INSTRUMENT PANEL COMPONENT DIAGNOSIS OR SERVICE. FAILURE TO TAKE THE PROPER PRECAUTIONS COULD RESULT IN ACCIDENTAL AIRBAG DEPLOYMENT AND POSSIBLE PERSONAL INJURY.

(1) Position the two front latches of the instrument panel fuse cover within the two locator channel formations on the bottom of the body control module housing (Fig. 21).

(2) While applying a slight upward pressure to the instrument panel fuse cover over the front latches, slowly slide the front latches through the locator channels toward the front of the vehicle until the latches exit the front of the locator channels. This will locate the front latches at the mounting slots in the lower housing of the body control module.

(3) Apply a slight rearward pressure on the instrument panel fuse cover to engage the front latches in the mounting slots in the lower housing of the body control module.

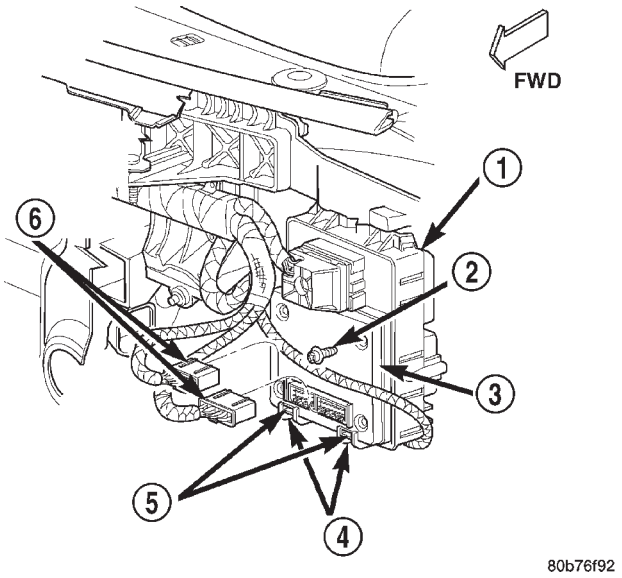

Fig. 21 Instrument Panel Fuse Cover Locator Channels

1 - JUNCTION BLOCK
2 - SCREWS (4)
3 - BODY CONTROL MODULE
4 - FUSE COVER LOCATOR CHANNELS
5 - FUSE COVER MOUNTING SLOTS
6 - INSTRUMENT PANEL WIRE HARNESS CONNECTORS

(4) Swing the rear edge (nearest the rear of the vehicle) of the instrument panel fuse cover up toward the junction block.

(5) Press firmly upward on the instrument panel fuse cover over the rear latches until the latches snap into place over the tabs on the lower edge of the junction block housing.

(6) Press firmly upward on the 16-way data link connector cover formation of the instrument panel fuse cover until the side latch snaps into place over the tab on the outboard side of the instrument panel steering column support bracket.

(7) Reconnect the battery negative cable.

ENGINE

TABLE OF CONTENTS

page

ENGINE - 4.0L 1

ENGINE 4.7L. 62

ENGINE - 4.0L

TABLE OF CONTENTS

page

ENGINE - 4.0L
DESCRIPTION 2
DIAGNOSIS AND TESTING 3
ENGINE DIAGNOSIS - INTRODUCTION. 3
SERVICE DIAGNOSIS(PERFORMANCE) 4
SERVICE (MECHANICAL) 6
CYLINDER COMPRESSION PRESSURE 8
CYLINDER COMBUSTION PRESSURE LEAKAGE 8
REAR SEAL AREA LEAKS 9
STANDARD PROCEDURE 9
FORM-IN-PLACE GASKETS AND SEALERS. . . . 9
REPAIR DAMAGED OR WORN THREADS 10
HYDROSTATIC LOCK. 10
CYLINDER BORE HONING. 11
ENGINE CORE AND OIL GALLERY PLUGS . . . 11
REMOVAL 12
INSTALLATION. 13
SPECIFICATIONS 14
AIR CLEANER ELEMENT
REMOVAL 18
INSTALLATION. 18
AIR CLEANER HOUSING
REMOVAL 18
INSTALLATION. 19
CYLINDER HEAD
DESCRIPTION 19
REMOVAL 20
CLEANING. 20
INSPECTION 21
INSTALLATION. 21
CYLINDER HEAD COVER(S)
DESCRIPTION 22
REMOVAL 22
CLEANING. 23
INSPECTION 23
INSTALLATION. 23

page

INTAKE/EXHAUST VALVES & SEATS
DESCRIPTION 23
STANDARD PROCEDURE 23
VALVE SERVICE 23
REMOVAL 25
INSTALLATION. 25
ROCKER ARM / ADJUSTER ASSEMBLY
DESCRIPTION 26
OPERATION. 26
REMOVAL 26
CLEANING. 26
INSPECTION 27
INSTALLATION. 27
VALVE STEM SEALS
DESCRIPTION 28
VALVE SPRINGS
DESCRIPTION 28
STANDARD PROCEDURE 28
VALVE SPRING TENSION TEST. 28
REMOVAL 28
INSTALLATION. 29
ENGINE BLOCK
CLEANING. 29
INSPECTION 30
CAMSHAFT & BEARINGS
DESCRIPTION 30
REMOVAL 30
INSPECTION 31
INSTALLATION. 32
CONNECTING ROD BEARINGS
STANDARD PROCEDURE 33
FITTING CONNECTING ROD BEARINGS. 33
CRANKSHAFT
DESCRIPTION 36
CRANKSHAFT MAIN BEARINGS
STANDARD PROCEDURE 36
FITTING CRANKSHAFT MAIN BEARINGS 36

REMOVAL 39
INSPECTION 39
INSTALLATION. 40
CRANKSHAFT OIL SEAL - FRONT
REMOVAL 41
INSTALLATION. 41
CRANKSHAFT OIL SEAL - REAR
REMOVAL 42
INSTALLATION. 42
HYDRAULIC LIFTERS
DESCRIPTION 43
REMOVAL 43
CLEANING. 43
INSPECTION 43
INSTALLATION. 43
PISTON & CONNECTING ROD
DESCRIPTION 44
STANDARD PROCEDURE 44
PISTON FITTING 44
REMOVAL 45
INSTALLATION. 46
PISTON RINGS
STANDARD PROCEDURE 47
PISTON RING FITTING 47
VIBRATION DAMPER
REMOVAL 49
INSTALLATION. 50
STRUCTURAL SUPPORT
REMOVAL 50
INSTALLATION. 50
LUBRICATION
DESCRIPTION 50
OPERATION. 50
DIAGNOSIS AND TESTING 51
ENGINE OIL PRESSURE 51
ENGINE OIL LEAK 51
OIL
STANDARD PROCEDURE 53
ENGINE OIL SERVICE 53
OIL FILTER
REMOVAL 54
INSTALLATION. 54
OIL PAN
DESCRIPTION 54
REMOVAL 54
INSTALLATION. 55
ENGINE OIL PRESSURE SENSOR
DESCRIPTION 56
OPERATION. 56
OIL PUMP
REMOVAL 56
INSTALLATION. 57
INTAKE MANIFOLD
DESCRIPTION 57
DIAGNOSIS AND TESTING 57
INTAKE MANIFOLD LEAKAGE DIAGNOSIS . . . 57
REMOVAL 57
INSTALLATION. 58
EXHAUST MANIFOLD
DESCRIPTION 59
REMOVAL 59
INSTALLATION. 59
TIMING BELT / CHAIN COVER(S)
REMOVAL 59
INSTALLATION. 60
TIMING BELT/CHAIN AND SPROCKETS
REMOVAL 60
INSTALLATION. 61

ENGINE - 4.0L

DESCRIPTION

The 4.0 Liter (242 CID) six-cylinder engine is an In-line, lightweight, overhead valve engine. This engine is designed for unleaded fuel.

The engine cylinder head has dual quench-type combustion chambers that create turbulence and fast burning of the air/fuel mixture. This results in better fuel economy.

The cylinders are numbered 1 through 6 from front to rear. The firing order is 1-5-3-6-2-4 (Fig. 1).

The crankshaft rotation is clockwise, when viewed from the front of the engine. The crankshaft rotates within seven main bearings. The camshaft rotates within four bearings.

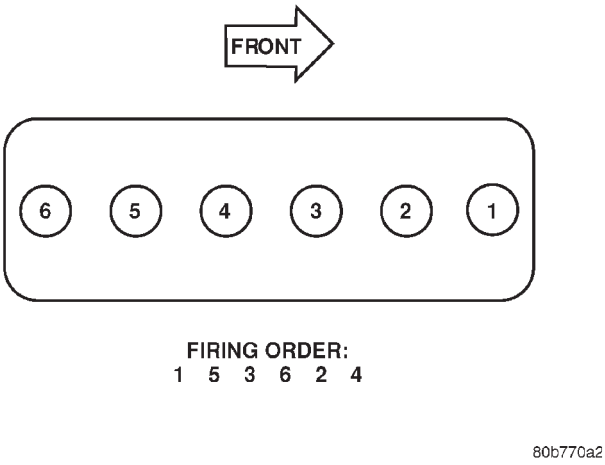

Fig. 1 Engine Firing Order

ENGINE - 4.0L (Continued)

The engine Build Date Code is located on a machined surface on the right side of the cylinder block between the No.2 and No.3 cylinders (Fig. 2).

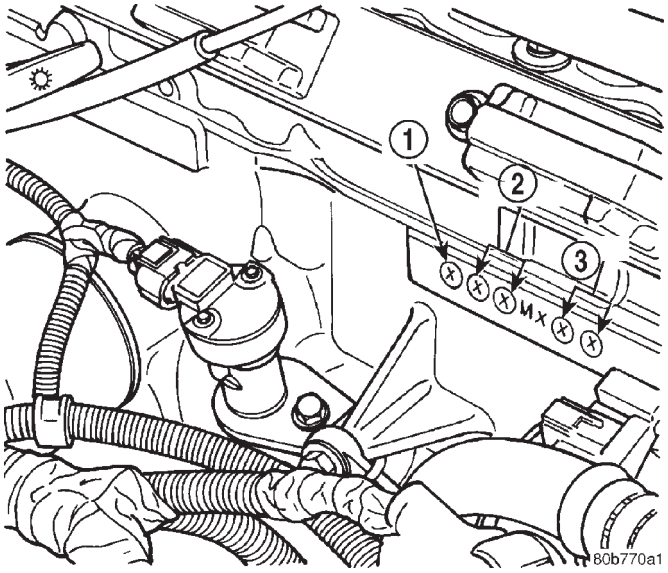

Fig. 2 Build Date Code Location

1 - YEAR
2 - MONTH
3 - DAY

The digits of the code identify:

- 1st Digit—The year (8 = 1998).
- 2nd & 3rd Digits—The month (01 - 12).
- 4th & 5th Digits—The engine type/fuel system/compression ratio (MX = A 4.0 Liter (242 CID) 8.7:1 compression ratio engine with a multi-point fuel injection system).
- 6th & 7th Digits—The day of engine build (01 - 31).

(1) **FOR EXAMPLE:** Code * 801MX12 * identifies a 4.0 Liter (242 CID) engine with a multi-point fuel injection system, 8.7:1 compression ratio and built on January 12, 1998.

DIAGNOSIS AND TESTING—ENGINE

DIAGNOSIS - INTRODUCTION

Engine diagnosis is helpful in determining the causes of malfunctions not detected and remedied by routine maintenance.

These malfunctions may be classified as either mechanical (e.g., a strange noise), or performance (e.g., engine idles rough and stalls).

(Refer to 9 - ENGINE - DIAGNOSIS AND TESTING - Preformance) or (Refer to 9 - ENGINE - DIAGNOSIS AND TESTING - Mechanical). Refer to FUEL SYSTEM for the fuel system diagnosis.

Additional tests and diagnostic procedures may be necessary for specific engine malfunctions that cannot be isolated with the Service Diagnosis charts. Information concerning additional tests and diagnosis is provided within the following:

- Cylinder Compression Pressure Test
- Cylinder Combustion Pressure Leakage Test
- Cylinder Head Gasket Failure Diagnosis
- Intake Manifold Leakage Diagnosis
- Lash Adjuster (Tappet) Noise Diagnosis
- Engine Oil Leak Inspection

ENGINE - 4.0L (Continued)

DIAGNOSIS AND TESTING - SERVICE DIAGNOSIS (PERFORMANCE)

ENGINE PERFORMANCE DIAGNOSIS CHART

CONDITION	POSSIBLE CAUSES	CORRECTION
ENGINE WILL NOT CRANK	1. Weak or dead battery	1. Charge/Replace Battery. (Refer to 8 - ELECTRICAL/BATTERY SYSTEM/BATTERY - STANDARD PROCEDURE), for correct procedures. Check charging system. (Refer to 8 - ELECTRICAL/ CHARGING - DIAGNOSIS AND TESTING), for correct procedures.
	2. Corroded or loose battery connections	2. Clean/tighten suspect battery/ starter connections
	3. Faulty starter or related circuit(s)	3. Check starting system. (Refer to 8 - ELECTRICAL/STARTING - DIAGNOSIS AND TESTING), for correct diagnostics/procedures
	4. Siezed accessory drive component	4. Remove accessory drive belt and attempt to start engine. If engine starts, repair/replace siezed component.
	5. Engine internal mechanical failure or hydro-static lock	5. (Refer to 9 - ENGINE - DIAGNOSIS AND TESTING), for correct diagnostics/procedures
ENGINE CRANKS BUT WILL NOT START	1. No spark	1. Check for spark. (Refer to 8 - ELECTRICAL/IGNITION CONTROL - SPECIFICATIONS), for correct procedures.
	2. No fuel	2. Perform fuel pressure test (Refer to 14 - FUEL SYSTEM/FUEL DELIVERY/FUEL PUMP - DIAGNOSIS AND TESTING), and if necessary, inspect fuel injector(s) and driver circuits. (Refer to 14 - FUEL SYSTEM/FUEL INJECTION/ FUEL INJECTOR - DIAGNOSIS AND TESTING), for correct procedures.
	3. Low or no engine compression	3. Perform cylinder compression pressure test. (Refer to 9 - ENGINE - DIAGNOSIS AND TESTING).
ENGINE LOSS OF POWER	1. Worn or burned distributor rotor	1. Install new distributor rotor
	2. Worn canshaft position sensor shaft	2. Remove and repair camshaft position sensor.(Refer to 8 - ELECTRICAL/IGNITION CONTROL/ CAMSHAFT POSITION SENSOR - REMOVAL).

ENGINE - 4.0L (Continued)

CONDITION	POSSIBLE CAUSES	CORRECTION
	3. Worn or incorrect gapped spark plugs	3. Clean plugs and set gap. (Refer to 8 - ELECTRICAL/IGNITION CONTROL/SPARK PLUG - CLEANING).
	4. Dirt or water in fuel system	4. Clean system and replace fuel filter
	5. Faulty fuel pump	5. Install new fuel pump
	6. Incorrect valve timing	6. Correct valve timing
	7. Blown cylinder head gasket	7. Install new cylinder head gasket
	8. Low compression	8. Test cylinder compression. (Refer to 9 - ENGINE - DIAGNOSIS AND TESTING).
	9. Burned, warped, or pitted valves	9. Install/Reface valves as necessary
	10. Plugged or restricted exhaust system	10. Install new parts as necessary
	11. Faulty ignition coil rail	11. Test and replace, as necessary. (Refer to 8 - ELECTRICAL/ IGNITION CONTROL/COIL RAIL - REMOVAL).
ENGINE STALLS OR ROUGH IDLE	1. Carbon build-up on throttle plate	1. Remove throttle body and de-carbon. (Refer to 14 - FUEL SYSTEM/FUEL INJECTION/ THROTTLE BODY - REMOVAL) for correct procedure.
	2. Engine idle speed too low	2. Check Idle Air Control circuit.
	3. Worn or incorrectly gapped spark plugs	3. Replace or clean and re-gap spark plugs. (Refer to 8 - ELECTRICAL/IGNITION CONTROL/ SPARK PLUG - CLEANING)
	4. Faulty coil rail	4. Test and replace, if necessary. (Refer to 8 - ELECTRICAL/ IGNITION CONTROL/COIL RAIL - REMOVAL)
	5. Intake manifold vacuum leak	5. Inspect intake manifold gasket and vacuum hoses. Replace if necessary. (Refer to 9 - ENGINE/ MANIFOLDS/INTAKE MANIFOLD - DIAGNOSIS AND TESTING).
ENGINE MISSES ON ACCELERATION	1. Worn or incorrectly gapped spark plugs	1. Replace spark plugs or clean and set gap. (Refer to 8 - ELECTRICAL/ IGNITION CONTROL/SPARK PLUG - CLEANING)
	2. Spark plug cables defective or crossed	2. Check Idle Air Control circuit.
	3. Dirt in fuel system	3. Clean fuel system
	4. Burned, warped or pitted valves	4. Install new valves

ENGINE - 4.0L (Continued)

CONDITION	POSSIBLE CAUSES	CORRECTION
	5. Faulty coil rail	5. Test and replace as necessary. (Refer to 8 - ELECTRICAL/ IGNITION CONTROL/COIL RAIL - REMOVAL)

DIAGNOSIS AND TESTING - SERVICE DIAGNOSIS (MECHANICAL)

ENGINE MECHANICAL DIAGNOSIS CHART

CONDITION	POSSIBLE CAUSES	CORRECTION
NOISY VALVES/LIFTERS	1. High or low oil level in crankcase	1. Check for correct oil level. Adjust oil level by draining or adding as needed
	2. Thin or diluted oil	2. Change oil. (Refer to 9 - ENGINE/LUBRICATION/OIL - STANDARD PROCEDURE)
	3. Low oil pressure	3. Check engine oil level. If ok, Perform oil pressure test. (Refer to 9 - ENGINE/LUBRICATION - DIAGNOSIS AND TESTING) for engine oil pressure test/ specifications
	4. Dirt in tappets/lash adjusters	4. Clean/replace hydraulic tappets/lash adjusters
	5. Bent push rod(s)	5. Install new push rods
	6. Worn rocker arms	6. Inspect oil supply to rocker arms and replace worn arms as needed
	7. Worn tappets/lash adjusters	7. Install new hydraulic tappets/lash adjusters
	8. Worn valve guides	8. Inspect all valve guides and replace as necessary
	9. Excessive runout of valve seats or valve faces	9. Grind valves and seats
CONNECTING ROD NOISE	1. Insufficient oil supply	1. Check engine oil level.
	2. Low oil pressure	2. Check engine oil level. If ok, Perform oil pressure test. (Refer to 9 - ENGINE/LUBRICATION - DIAGNOSIS AND TESTING) engine oil pressure test/specifications
	3. Thin or diluted oil	3. Change oil to correct viscosity. (Refer to 9 - ENGINE/ LUBRICATION/OIL - STANDARD PROCEDURE) for correct procedure/engine oil specifications
	4. Excessive connecting rod bearing clearance	Measure bearings for correct clearance with plasti-gage. Repair as necessary

ENGINE - 4.0L (Continued)

CONDITION	POSSIBLE CAUSES	CORRECTION
	5. Connecting rod journal out of round	5. Replace crankshaft or grind journals
	6. Misaligned connecting rods	6. Replace bent connecting rods
MAIN BEARING NOISE	1. Insufficient oil supply	1. Check engine oil level.
	2. Low oil pressure	2. Check engine oil level. If ok, Perform oil pressure test. (Refer to 9 - ENGINE/LUBRICATION - DIAGNOSIS AND TESTING)
	3. Thin or diluted oil	3. Change oil to correct viscosity.
	4. Excessive main bearing clearance	4. Measure bearings for correct clearance. Repair as necessary
	5. Excessive end play	5. Check crankshaft thrust bearing for excessive wear on flanges
	6. Crankshaft main journal out of round or worn	6. Grind journals or replace crankshaft
	7. Loose flywheel or torque converter	7. Inspect crankshaft, flexplate/ flywheel and bolts for damage. Tighten to correct torque
LOW OIL PRESSURE	1. Low oil level	1. Check oil level and fill if necessary
	2. Faulty oil pressure sending unit	2. Install new sending unit
	3. Clogged oil filter	3. Install new oil filter
	4. Worn oil pump	4. Replace oil pump assembly.
	5. Thin or diluted oil	5. Change oil to correct viscosity.
	6. Excessive bearing clearance	6. Measure bearings for correct clearance
	7. Oil pump relief valve stuck	7. Remove valve to inspect, clean and reinstall
	8. Oil pump suction tube loose, broken, bent or clogged	8. Inspect suction tube and clean or replace if necessary
	9. Oil pump cover warped or cracked	9. Install new oil pump
OIL LEAKS	1. Misaligned or deteriorated gaskets	1. Replace gasket
	2. Loose fastener, broken or porous metal part	2. Tighten, repair or replace the part
	3. Front or rear crankshaft oil seal leaking	3. Replace seal
	4. Leaking oil gallery plug or cup plug	4. Remove and reseal threaded plug. Replace cup style plug
EXCESSIVE OIL CONSUMPTION OR SPARK PLUGS OIL FOULED	1. CCV System malfunction	1. (Refer to 25 - EMISSIONS CONTROL/EVAPORATIVE EMISSIONS - DESCRIPTION) for correct operation
	2. Defective valve stem seal(s)	2. Repair or replace seal(s)

ENGINE - 4.0L (Continued)

CONDITION	POSSIBLE CAUSES	CORRECTION
	3. Worn or broken piston rings	3. Hone cylinder bores. Install new rings
	4. Scuffed pistons/cylinder walls	4. Hone cylinder bores and replace pistons as required
	5. Carbon in oil control ring groove	5. Remove rings and de-carbon piston
	6. Worn valve guides	6. Inspect/replace valve guides as necessary
	7. Piston rings fitted too tightly in grooves	7. Remove rings and check ring end gap and side clearance. Replace if necessary

DIAGNOSIS AND TESTING—CYLINDER COMPRESSION PRESSURE

The results of a cylinder compression pressure test can be utilized to diagnose several engine malfunctions.

Ensure the battery is completely charged and the engine starter motor is in good operating condition. Otherwise, the indicated compression pressures may not be valid for diagnosis purposes.

(1) Clean the spark plug recesses with compressed air.

(2) Remove the spark plugs (Refer to 8 - ELECTRICAL/IGNITION CONTROL/SPARK PLUG - REMOVAL).

(3) Secure the throttle in the wide-open position.

(4) Disconnect the ignition coil.

(5) Insert a compression pressure gauge and rotate the engine with the engine starter motor for three revolutions.

(6) Record the compression pressure on the third revolution. Continue the test for the remaining cylinders.

(Refer to 9 - ENGINE - SPECIFICATIONS) for the correct engine compression pressures.

DIAGNOSIS AND TESTING—CYLINDER COMBUSTION PRESSURE LEAKAGE

The combustion pressure leakage test provides an accurate means for determining engine condition.

Combustion pressure leakage testing will detect:

- Exhaust and intake valve leaks (improper seating)
- Leaks between adjacent cylinders or into water jacket
- Any causes for combustion/compression pressure loss

WARNING: DO NOT REMOVE THE RADIATOR CAP WITH THE SYSTEM HOT AND UNDER PRESSURE. SERIOUS BURNS FROM HOT COOLANT CAN OCCUR.

Check the coolant level and fill as required. DO NOT install the radiator cap.

Start and operate the engine until it attains normal operating temperature, then turn OFF the engine.

Remove the spark plugs.

Remove the oil filler cap.

Remove the air cleaner.

Calibrate the tester according to the manufacturer's instructions. The shop air source for testing should maintain 483 kPa (70 psi) minimum, 1,379 kPa (200 psi) maximum and 552 kPa (80 psi) recommended.

Perform the test procedure on each cylinder according to the tester manufacturer's instructions. While testing, listen for pressurized air escaping through the throttle body, tailpipe or oil filler cap opening. Check for bubbles in the radiator coolant.

All gauge pressure indications should be equal, with no more than 25% leakage.

FOR EXAMPLE: At 552 kPa (80 psi) input pressure, a minimum of 414 kPa (60 psi) should be maintained in the cylinder.

Refer to CYLINDER COMBUSTION PRESSURE LEAKAGE DIAGNOSIS CHART below

ENGINE - 4.0L (Continued)

CYLINDER COMBUSTION PRESSURE LEAKAGE DIAGNOSIS CHART

CONDITION	POSSIBLE CAUSE	CORRECTION
AIR ESCAPES THROUGH THROTTLE BODY	Intake valve bent, burnt, or not seated properly	Inspect valve and valve seat. Reface or replace, as necessary
AIR ESCAPES THROUGH TAILPIPE	Exhaust valve bent, burnt, or not seated properly	Inspect valve and valve seat. Reface or replace, as necessary
AIR ESCAPES THROUGH RADIATOR	Head gasket leaking or cracked cylinder head or block	Remove cylinder head and inspect. Replace defective part
MORE THAN 50% LEAKAGE FROM ADJACENT CYLINDERS	Head gasket leaking or crack in cylinder head or block between adjacent cylinders	Remove cylinder head and inspect. Replace gasket, head, or block as necessary
MORE THAN 25% LEAKAGE AND AIR ESCAPES THROUGH OIL FILLER CAP OPENING ONLY	Stuck or broken piston rings; cracked piston; worn rings and/or cylinder wall	Inspect for broken rings or piston. Measure ring gap and cylinder diameter, taper and out-of-round. Replace defective part as necessary

DIAGNOSIS AND TESTING—REAR SEAL AREA LEAKS

Since it is sometimes difficult to determine the source of an oil leak in the rear seal area of the engine, a more involved inspection is necessary. The following steps should be followed to help pinpoint the source of the leak.

If the leakage occurs at the crankshaft rear oil seal area:

(1) Disconnect the battery.

(2) Raise the vehicle.

(3) Remove torque converter or clutch housing cover and inspect rear of block for evidence of oil. Use a black light to check for the oil leak:

(a) Circular spray pattern generally indicates seal leakage or crankshaft damage.

(b) Where leakage tends to run straight down, possible causes are a porous block, distributor seal, camshaft bore cup plugs, oil galley pipe plugs, oil filter runoff, and main bearing cap to cylinder block mating surfaces.

(4) If no leaks are detected, pressurized the crankcase as outlined in (Refer to 9 - ENGINE/LUBRICATION - DIAGNOSIS AND TESTING)

CAUTION: Do not exceed 20.6 kPa (3 psi).

(5) If the leak is not detected, very slowly turn the crankshaft and watch for leakage. If a leak is detected between the crankshaft and seal while slowly turning the crankshaft, it is possible the crankshaft seal surface is damaged. The seal area on the crankshaft could have minor nicks or scratches that can be polished out with emery cloth.

CAUTION: Use extreme caution when crankshaft polishing is necessary to remove minor nicks or scratches. The crankshaft seal flange is specially machined to complement the function of the rear oil seal.

(6) For bubbles that remain steady with shaft rotation, no further inspection can be done until disassembled. Refer to the service Diagnosis—Mechanical, under the Oil Leak row, for components inspections on possible causes and corrections.

(7) After the oil leak root cause and appropriate corrective action have been identified, (Refer to 9 - ENGINE/ENGINE BLOCK/CRANKSHAFT OIL SEAL - REAR - REMOVAL), for proper replacement procedures.

STANDARD PROCEDURE—FORM-IN-PLACE GASKETS & SEALERS

There are numerous places where form-in-place gaskets are used on the engine. Care must be taken when applying form-in-place gaskets to assure obtaining the desired results. **Do not use form-in-place gasket material unless specified.** Bead size, continuity, and location are of great importance. Too thin a bead can result in leakage while too much can result in spill-over which can break off and obstruct fluid feed lines. A continuous bead of the proper width is essential to obtain a leak-free gasket.

There are numerous types of form-in-place gasket materials that are used in the engine area. Mopar® Engine RTV GEN II, Mopar® ATF-RTV, and Mopar® Gasket Maker gasket materials, each have different properties and can not be used in place of the other.

MOPAR® ENGINE RTV GEN II

Mopar® Engine RTV GEN II is used to seal components exposed to engine oil. This material is a specially designed black silicone rubber RTV that retains adhesion and sealing properties when

exposed to engine oil. Moisture in the air causes the material to cure. This material is available in three ounce tubes and has a shelf life of one year. After one year this material will not properly cure. Always inspect the package for the expiration date before use.

MOPAR® ATF RTV

Mopar® ATF RTV is a specifically designed black silicone rubber RTV that retains adhesion and sealing properties to seal components exposed to automatic transmission fluid, engine coolants, and moisture. This material is available in three ounce tubes and has a shelf life of one year. After one year this material will not properly cure. Always inspect the package for the expiration date before use.

MOPAR® GASKET MAKER

Mopar® Gasket Maker is an anaerobic type gasket material. The material cures in the absence of air when squeezed between two metallic surfaces. It will not cure if left in the uncovered tube. The anaerobic material is for use between two machined surfaces. Do not use on flexible metal flanges.

MOPAR® GASKET SEALANT

Mopar® Gasket Sealant is a slow drying, permanently soft sealer. This material is recommended for sealing threaded fittings and gaskets against leakage of oil and coolant. Can be used on threaded and machined parts under all temperatures. This material is used on engines with multi-layer steel (MLS) cylinder head gaskets. This material also will prevent corrosion. Mopar® Gasket Sealant is available in a 13 oz. aerosol can or 4oz./16 oz. can w/applicator.

FORM-IN-PLACE GASKET AND SEALER APPLICATION

Assembling parts using a form-in-place gasket requires care but it's easier then using precut gaskets.

Mopar® Gasket Maker material should be applied sparingly 1 mm (0.040 in.) diameter or less of sealant to one gasket surface. Be certain the material surrounds each mounting hole. Excess material can easily be wiped off. Components should be torqued in place within 15 minutes. The use of a locating dowel is recommended during assembly to prevent smearing material off the location.

Mopar® Engine RTV GEN II or ATF RTV gasket material should be applied in a continuous bead approximately 3 mm (0.120 in.) in diameter. All mounting holes must be circled. For corner sealing, a 3.17 or 6.35 mm (1/8 or 1/4 in.) drop is placed in the center of the gasket contact area. Uncured sealant may be removed with a shop towel. Components should be torqued in place while the sealant is still wet to the touch (within 10 minutes). The usage of a locating dowel is recommended during assembly to prevent smearing material off the location.

Mopar® Gasket Sealant in an aerosol can should be applied using a thin, even coat sprayed completely over both surfaces to be joined, and both sides of a gasket. Then proceed with assembly. Material in a can w/applicator can be brushed on evenly over the sealing surfaces. Material in an aerosol can should be used on engines with multi-layer steel gaskets.

STANDARD PROCEDURE—REPAIR DAMAGED OR WORN THREADS

CAUTION: Be sure that the tapped holes maintain the original center line.

Damaged or worn threads can be repaired. Essentially, this repair consists of:

- Drilling out worn or damaged threads.
- Tapping the hole with a special Heli-Coil Tap, or equivalent.
- Installing an insert into the tapped hole to bring the hole back to its original thread size.

STANDARD PROCEDURES—HYDROSTATIC LOCK

CAUTION: DO NOT use the starter motor to rotate the crankshaft. Severe damage could occur.

When an engine is suspected of hydrostatic lock (regardless of what caused the problem), follow the steps below.

(1) Perform the Fuel Pressure Release Procedure (Refer to 14 - FUEL SYSTEM/FUEL DELIVERY - STANDARD PROCEDURE).

(2) Disconnect the negative cable(s) from the battery.

(3) Inspect air cleaner, induction system, and intake manifold to ensure system is dry and clear of foreign material.

(4) Place a shop towel around the spark plugs to catch any fluid that may possibly be under pressure in the cylinder head. Remove the spark plugs.

(5) With all spark plugs removed, rotate the crankshaft using a breaker bar and socket.

(6) Identify the fluid in the cylinders (coolant, fuel, oil, etc.).

(7) Be sure all fluid has been removed from the cylinders.

(8) Repair engine or components as necessary to prevent this problem from occurring again.

(9) Squirt a small amount of engine oil into the cylinders to lubricate the walls. This will prevent damage on restart.

ENGINE - 4.0L (Continued)

(10) Install new spark plugs. Tighten the spark plugs to 41 N·m (30 ft. lbs.) torque.

(11) Drain engine oil. Remove and discard the oil filter.

(12) Install the drain plug. Tighten the plug to 34 N·m (25 ft. lbs.) torque.

(13) Install a new oil filter.

(14) Fill engine crankcase with the specified amount and grade of oil. (Refer to LUBRICATION & MAINTENANCE - SPECIFICATIONS).

(15) Connect the negative cable(s) to the battery.

(16) Start the engine and check for any leaks.

STANDARD PROCEDURE—CYLINDER BORE HONING

Before honing, stuff plenty of clean shop towels under the bores and over the crankshaft to keep abrasive materials from entering the crankshaft area.

(1) Used carefully, the Cylinder Bore Sizing Hone C-823, equipped with 220 grit stones, is the best tool for this job. In addition to deglazing, it will reduce taper and out-of-round, as well as removing light scuffing, scoring and scratches. Usually, a few strokes will clean up a bore and maintain the required limits.

CAUTION: DO NOT use rigid type hones to remove cylinder wall glaze.

(2) Deglazing of the cylinder walls may be done if the cylinder bore is straight and round. Use a cylinder surfacing hone, Honing Tool C-3501, equipped with 280 grit stones (C-3501-3810). about 20-60 strokes, depending on the bore condition, will be sufficient to provide a satisfactory surface. Using honing oil C-3501-3880, or a light honing oil, available from major oil distributors.

CAUTION: DO NOT use engine or transmission oil, mineral spirits, or kerosene.

(3) Honing should be done by moving the hone up and down fast enough to get a crosshatch pattern. The hone marks should INTERSECT at 50° to 60° for proper seating of rings (Fig. 3).

(4) A controlled hone motor speed between 200 and 300 RPM is necessary to obtain the proper crosshatch angle. The number of up and down strokes per minute can be regulated to get the desired 50° to 60° angle. Faster up and down strokes increase the crosshatch angle.

(5) After honing, it is necessary that the block be cleaned to remove all traces of abrasive. Use a brush to wash parts with a solution of hot water and detergent. Dry parts thoroughly. Use a clean, white, lint-free cloth to check that the bore is clean. Oil the bores after cleaning to prevent rusting.

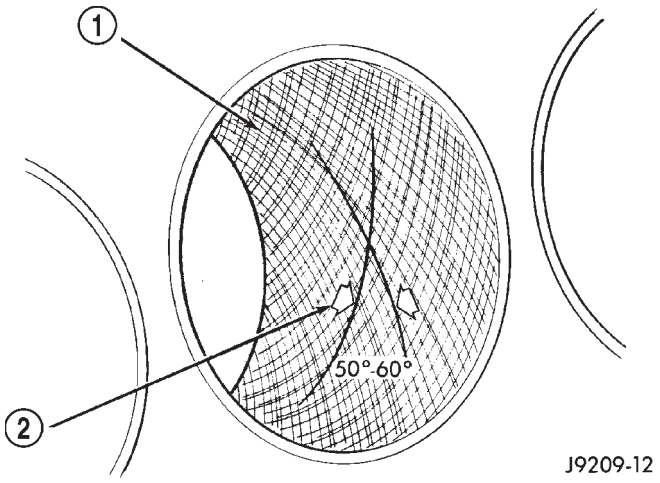

Fig. 3 Cylinder Bore Crosshatch Pattern

1 - CROSSHATCH PATTERN
2 - INTERSECT ANGLE

STANDARD PROCEDURE - ENGINE CORE AND OIL GALLERY PLUGS

Using a blunt tool such as a drift and a hammer, strike the bottom edge of the cup plug. With the cup plug rotated, grasp firmly with pliers or other suitable tool and remove plug (Fig. 4).

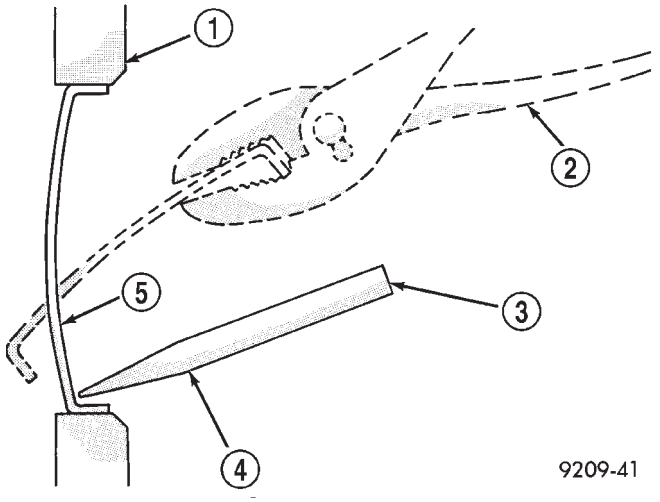

Fig. 4 CORE HOLE PLUG REMOVAL

1 - CYLINDER BLOCK
2 - REMOVE PLUG WITH PLIERS
3 - STRIKE HERE WITH HAMMER
4 - DRIFT PUNCH
5 - CUP PLUG

CAUTION: Do not drive cup plug into the casting as restricted cooling can result and cause serious engine problems.

ENGINE - 4.0L (Continued)

Thoroughly clean inside of cup plug hole in cylinder block or head. Be sure to remove old sealer. Lightly coat inside of cup plug hole with Mopar® Stud and Bearing Mount. Make certain the new plug is cleaned of all oil or grease. Using proper drive plug, drive plug into hole so that the sharp edge of the plug is at least 0.5 mm (0.020 in.) inside the lead-in chamfer.

It is not necessary to wait for curing of the sealant. The cooling system can be refilled and the vehicle placed in service immediately.

REMOVAL

(1) Disconnect the battery negative cable.

(2) Mark the hinge locations on the hood panel for alignment reference during installation. Remove the engine compartment lamp. Remove the hood.

(3) Remove the radiator drain cock and radiator cap to drain the coolant. DO NOT waste usable coolant. If the solution is clean, drain the coolant into a clean container for reuse.

(4) Remove the upper radiator hose and coolant recovery hose.

(5) Remove the lower radiator hose.

(6) Remove upper radiator support retaining bolts and remove radiator support.

(7) Remove the fan assembly from the water pump (Refer to 7 - COOLING/ENGINE/RADIATOR FAN - REMOVAL).

(8) Remove the fan shroud.

(9) Disconnect the transmission fluid cooler lines (automatic transmission).

(10) Discharge the A/C system (Refer to 24 - HEATING & AIR CONDITIONING/PLUMBING - STANDARD PROCEDURE).

(11) Remove the service valves and cap the compressor ports.

(12) Remove the radiator or radiator/condenser (if equipped with A/C).

(13) Disconnect the heater hoses at the engine thermostat housing and water pump.

(14) Disconnect the accelerator cable, transmission line pressure cable and speed control cable (if equipped) from the throttle body.

(15) Remove cables from the bracket and secure out of the way.

(16) Disconnect the body ground at the engine.

(17) Disconnect the following connectors and secure their harness out of the way.

- Power steering pressure switch
- Coolant temperature sensor
- Six (6) fuel injector connectors
- Intake air temperature sensor
- Throttle position sensor
- Map sensor
- Crankshaft position sensor
- Oxygen sensor
- Camshaft position sensor
- Generator connector and B+ terminal wire

(18) Disconnect the coil rail electrical connections and the oil pressure switch connector.

(19) Perform the fuel pressure release procedure (Refer to 14 - FUEL SYSTEM/FUEL DELIVERY - STANDARD PROCEDURE).

(20) Disconnect the fuel supply line at the injector rail (Refer to 14 - FUEL SYSTEM/FUEL DELIVERY/ QUICK CONNECT FITTING - STANDARD PROCEDURE).

(21) Remove the fuel line bracket from the intake manifold.

(22) Remove the air cleaner assembly (Fig. 5).

(23) Disconnect the hoses from the fittings at the steering gear.

(24) Drain the pump reservoir.

(25) Cap the fittings on the hoses and steering gear to prevent foreign objects from entering the system.

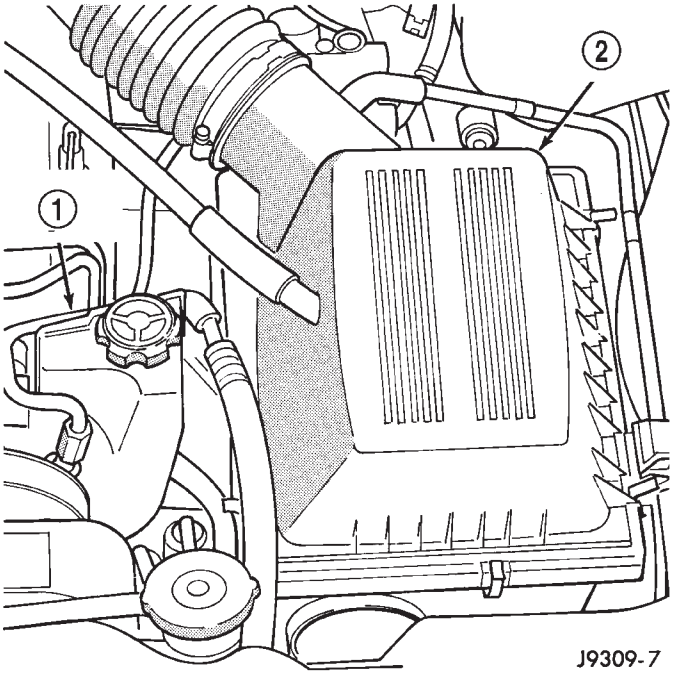

Fig. 5 Air Cleaner Assembly

1 - POWER STEERING PUMP
2 - AIR CLEANER ASSEMBLY

(26) Raise and support the vehicle.

(27) Disconnect the wires from the engine starter motor solenoid.

(28) Remove the engine starter motor (Refer to 8 - ELECTRICAL/STARTING/STARTER MOTOR - REMOVAL).

(29) Disconnect the oxygen sensor from the exhaust pipe.

ENGINE - 4.0L (Continued)

(30) Disconnect the exhaust pipe from the manifold.

(31) Remove the exhaust pipe support.

(32) Remove the bending brace (Refer to 9 - ENGINE/ENGINE BLOCK/STRUCT SUPPORT - REMOVAL).

(33) Remove the engine flywheel/converter housing access cover.

(34) Mark the converter and drive plate location.

(35) Remove the converter-to-drive plate bolts.

(36) Remove the upper engine flywheel/converter housing bolts and loosen the bottom bolts.

(37) Remove the engine mount cushion-to-engine compartment bracket bolts.

(38) Lower the vehicle.

(39) Attach a lifting device to the engine.

(40) Raise the engine off the front supports.

(41) Place a support or floor jack under the converter (or engine flywheel) housing.

(42) Remove the remaining converter (or engine flywheel) housing bolts.

(43) Lift the engine out of the engine compartment.

INSTALLATION

CAUTION: When installing the engine into a vehicle equipped with an automatic transmission, be careful not to damage the trigger wheel on the engine flywheel.

(1) Attach a lifting device to the engine and lower the engine into the engine compartment. For easier installation, it may be necessary to remove the engine mount bracket as an aid in alignment of the engine to the transmission.

(2) Align the transmission torque converter housing with the engine.

(3) Loosely install the converter housing lower bolts and install the next higher bolt and nut on each side.

(4) Tighten all 4 bolts finger tight.

(5) Install the engine mount brackets (if removed).

(6) Lower the engine and engine mount brackets onto the engine compartment cushions. Install the bolts and finger tighten the nuts.

(7) Remove the engine lifting device.

(8) Raise and support the vehicle.

(9) Install the remaining engine flywheel/converter housing bolts. Tighten all bolts to 38 N·m (28 ft. lbs.) torque.

(10) Install the converter-to-drive plate bolts.

(11) Ensure the installation reference marks are aligned.

(12) Install the engine flywheel/converter housing access cover.

(13) Install the exhaust pipe support and tighten the screw.

(14) Install the engine bending brace (Refer to 9 - ENGINE/ENGINE BLOCK/STRUCT SUPPORT - INSTALLATION) .

(15) Tighten the engine mount-to-bracket bolts.

(16) Connect the vehicle speed sensor wire connections and tighten the screws.

(17) Connect the exhaust pipe to the manifold.

(18) Install the engine starter motor (Refer to 8 - ELECTRICAL/STARTING/STARTER MOTOR - INSTALLATION).

(19) Connect the wires to the engine starter motor solenoid.

(20) Lower the vehicle.

(21) Connect all the vacuum hoses and wire connectors identified during engine removal.

(22) Remove protective caps from the power steering hoses.

(23) Connect the hoses to the fittings at the steering gear. Tighten the nut to 52 N·m (38 ft. lbs.) torque.

(24) Fill the pump reservoir with fluid.

(25) Inspect the fuel supply line o-ring(s) and replace if necessary. Connect fuel supply line to injectior rail and verify connection by pulling outward on the line.

(26) Install the fuel line bracket to the intake manifold.

(27) Connect the coil rail electrical connectors and oil pressure switch connector.

(28) Connect the following electrical connectors:

- Power steering pressure switch
- Coolant temperature sensor
- Six (6) fuel injector connectors
- Intake air temperature sensor
- Throttle position sensor
- Map sensor
- Crankshaft position sensor
- Oxygen sensor
- Camshaft position sensor
- Generator connector and B+ terminal wire

(29) Connect all previously removed vacuum hoses.

(30) Connect the body ground strap.

(31) Install the throttle, transmission line pressure, and speed control cables to their mounting bracket and connect them to the throttle body.

(32) Connect the heater hoses at the engine thermostat housing and water pump.

(33) Install the fan assembly (Refer to 7 - COOLING/ENGINE/RADIATOR FAN - INSTALLATION).

(34) Place the fan shroud in position over the fan.

(35) Install the radiator (Refer to 7 - COOLING/ENGINE/RADIATOR - INSTALLATION).

(36) Connect the service valves to the A/C compressor ports, if equipped with A/C.

ENGINE - 4.0L (Continued)

(37) Charge the air conditioner system (Refer to 24 - HEATING & AIR CONDITIONING/PLUMBING - STANDARD PROCEDURE).
(38) Connect the radiator hoses and automatic transmission fluid cooler pipes, if equipped.
(39) Install the fan shroud to the radiator or radiator/condenser (if equipped with A/C).
(40) Install upper radiator support.
(41) Connect the upper radiator hose and tighten the clamp.
(42) Connect the lower radiator hose and tighten the clamp.
(43) Fill crankcase with engine oil. (Refer to LUBRICATION & MAINTENANCE/FLUID CAPACITIES - SPECIFICATIONS) for correct capacities.
(44) Fill the cooling system with reusable coolant or new coolant (Refer to 7 - COOLING - STANDARD PROCEDURE).
(45) Align the hood to the scribe marks. Install the hood.
(46) Install the air cleaner assembly.
(47) Install the battery and connect the battery cable.

WARNING: USE EXTREME CAUTION WHEN THE ENGINE IS OPERATING. DO NOT STAND IN A DIRECT LINE WITH THE FAN. DO NOT PUT YOUR HANDS NEAR THE PULLEYS, BELTS OR FAN. DO NOT WEAR LOOSE CLOTHING.

(48) Start the engine, inspect for leaks and correct the fluid levels, as necessary.

SPECIFICATIONS

ENGINE - 4.0L

DESCRIPTION	SPECIFICATION
Engine Type	In-line 6 Cylinder
Bore and Stroke	98.4 x 86.69 mm (3.88 x 3.413 in.)
Displacement	4.0L (242 cu. in.)
Compression Ratio	8.8:1
Firing Order	1–5–3–6–2–4
Lubrication	Pressure Feed–Full Flow Filtration
Cooling System	Liquid Cooled–Forced Circulation

DESCRIPTION	SPECIFICATION
Cylinder Block	Cast Iron
Crankshaft	Cast Nodular Iron
Cylinder Head	Cast Iron
Camshaft	Cast Iron
Pistons	Aluminum Alloy
Combustion Chamber	Dual-Quench
Connecting Rods	Cast Malleable Iron
CAMSHAFT	
Hydraulic Tappet Clearance	Zero Lash
Bearing Clearance	0.025 to 0.076 mm (0.001 to 0.003 in.)
Bearing Journal Diameter	
No. 1	51.54 to 51.56 mm (2.029 to 2.030 in.)
No. 2	51.28 to 51.31 mm (2.019 to 2.020 in.)
No. 3	51.03 to 51.05 mm (2.009 to 2.010 in.)
No. 4	50.78 to 50.80 mm (1.999 to 2.000 in.)
Base Circle Runout (MAX)	0.03 mm (0.001 in.)
Valve Lift	
Intake	10.350 mm (0.4075 in.)
Exhaust	10.528 mm (0.4145 in.)
Valve Timing	
Intake	
Opens	12.4° BTDC
Closes	60.9° ABDC
Exhaust	
Opens	49.8 BBDC
Closes	29.2° ATDC
Valve Overlap	41.6°
Intake Duration	253.3°

SPECIFICATIONS (Continued)

DESCRIPTION	SPECIFICATION
Exhaust Duration	259.°
CRANKSHAFT	
End Play	0.038 to 0.165 mm (0.0015 to 0.0065 in.)
Main Bearing Journal Diameter	
No. 1-6	63.489 to 63.502 mm (2.4996 to 2.5001 in.)
No. 7	63.449 to 63.487 mm (2.4980 to 2.4995 in.)
Main Bearing Journal Width	
No. 1	27.58 to 27.89 mm (1.086 to 1.098 in.)
No. 3	32.28 to 32.33 mm (1.271 to 1.273 in.)
No. 2-4-5-6-7	30.02 to 30.18 mm (1.182 to 1.188 in.)
Main Bearing Clearance	0.03 to 0.06 mm (0.001 to 0.0025 in.)
Preferred	0.051 mm (0.002 in.)
Connecting Rod Journal Diameter	53.17 to 53.23 mm (2.0934 to 2.0955 in.)
Connecting Rod Journal Width	27.18 to 27.33 mm (1.070 to 1.076 in.)
Out-of-Round (MAX)	0.013 mm (0.0005 in.)
Taper (MAX)	0.013 mm (0.0005 in.)
CYLINDER BLOCK	
Deck Height	240.03 to 240.18 mm (9.450 to 9.456 in.)
Deck Clearance (Below Block)	0.546 mm (0.0215 in.)
Cylinder Bore Diameter	
Standard	98.45 to 98.48 mm (3.8759 to 3.8775 in.)

DESCRIPTION	SPECIFICATION
Taper	0.025 mm (0.001 in.)
Out-ofRound	0.025 mm (0.001 in.)
Tappet Bore Diameter	23.000 to 23.025 mm (0.9055 to 0.9065 in.)
Flatness	0.03 mm per 25 mm (0.001 in. per 1 in.) 0.05 mm per 152 mm (0.002 in. per 6 in.)
Flatness Max.	0.20 mm max. for total length (0.008 in. max. for total length)
Main Bearing Bore Diameter	68.3514 to 68.3768 mm (2.691 to 2.692 in.)
CONNECTING ROD	
Total Weight (Less Bearing)	663 to 671 grams (23.39 to 23.67 oz.)
Length (Center-to-Center)	155.52 to 155.62 mm (6.123 to 6.127 in.)
Piston Pin Bore Diameter	23.59 to 23.62 mm (0.9288 to 0.9298 in.)
Bore (Less Bearings)	56.08 to 56.09 mm (2.2080 to 2.2085 in.)
Bearing Clearance	0.025 to 0.076 mm (0.001 to 0.003 in.)
Preferred	0.044 to 0.050 mm (0.0015 to 0.0020 in.)
Side Clearance	0.25 to 0.48 mm (0.010 to 0.019 in.)
Twist (Max.)	0.002 mm per mm (0.002 in. per inch)
Bend (Max.)	0.002 mm per mm (0.002 in. per inch.)
CYLINDER COMPRESSION PRESSURE	
Pressure Range	827 to 1,034 kPa

SPECIFICATIONS (Continued)

DESCRIPTION	SPECIFICATION
	(120 to 150 psi)
Max. Variation Between Cylinders	206 kPa (30 psi)
CYLINDER HEAD	
Combustion Chamber	55.22 to 58.22 cc (3.37 to 3.55 cu. in.)
Valve Guide I.D. (Integral)	7.95 to 7.97 mm (0.313 to 0.314 in.)
Valve Stem-to-Guide Clearance	0.025 to 0.076 mm (0.001 to 0.003 in.)
Valve Seat Angle	
Intake	44.5°
Exhaust	44.5°
Valve Seat Width	1.02 to 1.52 mm (0.040 to 0.060 in.)
Valve Seat Runout	0.064 mm (0.0025 in.)
Flatness	0.03 mm per 25 mm (0.001 in. per 1 in.) 0.05 mm per 152 mm (0.002 in. per 6 in.)
Flatness Max.	0.20 mm - max. for total length (0.008 in. max. for total length)
ROCKER ARMS, PUSH RODS & TAPPETS	
Rocker Arm Ratio	1.6:1
Push Rod Length (Pink)	244.856 to 245.364 mm (9.640 to 9.660 in.)
Push Rod Diameter	7.92 to 8.00 mm (0.312 to 0.315 in.)
Hydraulic Tappet Diameter	22.962 to 22.974 mm (0.904 to 0.9045 in.)
Tappet-to-Bore Clearance	0.025 to 0.063 mm (0.001 to 0.0025 in.)

DESCRIPTION	SPECIFICATION
VALVES	
Valve Length (Overall)	
Intake	122.479 to 122.860 mm (4.822 to 4.837 in.)
Exhaust	122.860 to 123.241 mm (4.837 to 4.852 in.)
Valve Stem Diameter	7.899 to 7.925 mm (0.311 to 0.312 in.)
Stem-to-Guide Clearance	0.025 to 0.076 mm (0.001 to 0.003 in.)
Valve Head Diameter	
Intake	48.387 to 48.641 mm (1.905 to 1.915 in.)
Exhaust	37.973 to 38.227 mm (1.495 to 1.505 in.)
Valve Face Angle	
Intake	46.5°
Exhaust	46.5°
Tip Refinishing (Max. Allowable)	0.25 mm (0.010 in.)
VALVE SPRINGS	
Free Length (Approx.)	47.65 mm (1.876 in.)
Spring Load	
Valve Closed	316 to 351 N @ 41.656 mm (71 to 79 lbf. @ 1.64 in.)
Valve Open	898.6 to 969.7 N @ 30.89 mm (202 to 218 lbf @ 1.216 in.)
Inside Diameter	21.0 mm to 21.51 mm (0.827 to 0.847 in.)
Installed Height	41.656 mm (1.64 in.)
PISTONS	
Weight (Less Pin)	417 to 429 grams (14.7 to 15.1 oz.)

SPECIFICATIONS (Continued)

DESCRIPTION	SPECIFICATION
Piston Pin Bore (Centerline to Piston Top)	40.61 to 40.72 mm (1.599 to 1.603 in.)
Piston-to-Bore Clearance	0.018 to 0.038 mm (0.0008 to 0.0015 in.)
Ring Gap Clearance	
Top Compression Ring	0.229 to 0.610 mm (0.0090 to 0.0240 in.)
2nd Compression Ring	0.483 to 0.965 mm (0.0190 to 0.0380 in.)
Oil Control Steel Rails	0.254 to 1.500 mm (0.010 to 0.060 in.)
Ring Side Clearance	
Compression Rings	0.042 to 0.084 mm (0.0017 to 0.0033 in.)
Oil Control Rings	0.06 to 0.21 mm (0.0024 to 0.0083 in.)
Piston Ring Groove Height	
Compression Rings	1.530 to 1.555 mm (0.0602 to 0.0612 in.)
Oil Control Ring	4.035 to 4.060 mm (0.1589 to 0.1598 in.)
Piston Ring Groove Diameter	
No.1 Compression Ring	88.39 to 88.65 mm (3.48 to 3.49 in.)
No.2 Compression Ring	87.63 to 87.88 mm (3.45 to 3.46 in.)
Oil Control Ring	89.66 to 89.92 mm (3.53 to 3.54 in.)
Piston Pin Bore Diameter	23.650 to 23.658 mm (0.9312 to 0.9315 in.)
Piston Pin Diameter	23.637 to 23.640 mm (0.9306 to 0.9307 in.)
Piston-to-Pin Clearance	0.0102 to 0.0208 mm (0.0005 to 0.0009 in.)
Piston-to-Pin Connecting Rod (Press Fit)	8.9 kN (2000 lbf.)

DESCRIPTION	SPECIFICATION
OIL PUMP	
Gear-to-Body Clearance (Radial)	0.051 to 0.102 mm (0.002 to (0.004 in.)
Gear-to-Body Clearance (Radial) Preferred	0.051 mm (0.002 in.)
Gear End Clearance Plastigage	0.051 to 0.152 mm (0.002 to 0.006 in.)
Gear End Clearance Plastigage (Preferred)	0.051 mm (0.002 in.)
Gear End Clearance Feeler Gauge	0.1016 to 0.2032 mm (0.004 to 0.008 in.)
Gear End Clearance Feeler Gauge (Preferred)	0.1778 mm (0.007 in.)
Oil Pressure	
At Idle Speed	89.6 kPa (13 psi)
At 1600 rpm & Higher	255 to 517 kPa (37 to 75 psi)
Oil Pressure Relief	517 kPa (75 psi)

TORQUE - 4.0L ENGINE

DESCRIPTION	N·m	Ft. Lbs.	In. Lbs.
A/C Compressor—Bolts	28	—	250
Block Heater—Nut	2	—	16
Camshaft Sprocket—Bolt	68	50	—
Camshaft Thrust Plate to Cylinder Block—Screws	24	18	—
Clutch Cover to Flywheel—Bolts	54	40	—
Coil Bracket to Block—Bolts	22	—	192
Connecting Rod—Nuts	45	33	—
Cylinder Block—Drain Plugs	34	25	—
Cylinder Head—Bolts	135	100	—
Cylinder Head Cover—Bolts	10	—	85
Distributor Clamp—Bolts	23	—	204
Engine Mounts—Front Support Bracket Bolts	61	45	—

SPECIFICATIONS (Continued)

DESCRIPTION	N·m	Ft. Lbs.	In. Lbs.
Support Cushion Bolts/Nuts	41	30	—
Support Cushion Bracket Bolts	54	40	—
Support Cushion Bracket Stud Nuts	41	30	—
Support Cushion Thru-Bolt	65	48	—
Engine Mounts—Rear			
Crossmember to Sill Bolts—			
(Automatic)	41	30	—
Insulator Stud Assembly—Nut	41	30	—
Support Cushion/			
Crossmember—Nuts	22	—	192
Support Cushion/Bracket—Nuts			
(Manual)	75	55	—
Transmission Support Bracket			
—Bolt (Manual)	46	34	—
Transmission Support Bracket/			
Cushion—Bolt (4WD Auto)	75	55	—
Transmission Support Adaptor			
Bracket—Bolts (2WD Auto)	75	55	—
Exhaust Manifold/Pipe—Nuts	27	20	—
Intake/Exhaust Manifold			
Fasteners #1-5	33	24	—
Fasteners #6 and 7	14	—	126
Fasteners #8-11	33	24	—
Flywheel to Converter Housing—Bolts	38	28	—
Flywheel to Crankshaft—Bolts	143	105	—
Front Cover to Block—Bolts			
1/4-20	7	—	60
5/16-18	22	—	192
Fuel Rail—Bolts/Stud	12	—	108
Generator—Bolts	57	42	—
Generator Bracket to Engine—Bolts	47	35	—
Idler Pulley to Cylinder Head—Bolt	47	35	—
Main Bearing Cap—Bolts	108	80	—
Oil Filter	18	—	156
Oil Filter Connector to			
Adaptor	47	35	—
Block	68	50	—
Adaptor Bolts	102	50	—
Oil Galley—Plug	41	30	—
Oil Pan—Bolts			
1/4-20	9.5	—	84
5/16-18	15	—	132
Oil Pan—Drain Plug	34	25	—
Oil Pump			
Mounting Bolts	23	—	204
Cover Bolts	8	—	70
Rocker Arm Assembly to Cylinder Head—Capscrews	30	21	—
Spark Plugs	37	27	—
Starter Motor—Mounting Bolts	45	33	—
Thermostat Housing—Bolts	18	—	156
Throttle Body—Bolts	10	—	90
Vibration Damper—Bolt	108	80	—
Water Pump to Block—Bolts	23	17	—

AIR CLEANER ELEMENT

REMOVAL - 4.0L

(1) Unlatch four clips retaining air cleaner cover to air cleaner housing (Fig. 6).
(2) Lift cover up and position to the side.
(3) Remove air cleaner element.

INSTALLATION - 4.0L

(1) Clean inside of air cleaner housing before installing new element.
(2) Install air cleaner element into housing.
(3) Latch clips and clamp cover down to secure. Be sure air cleaner cover is properly seated to air cleaner housing.

AIR CLEANER HOUSING

REMOVAL - 4.0L

(1) Disconnect air cleaner cover-to-air duct clamp (Fig. 6).
(2) Disconnect air duct at housing.

AIR CLEANER HOUSING (Continued)

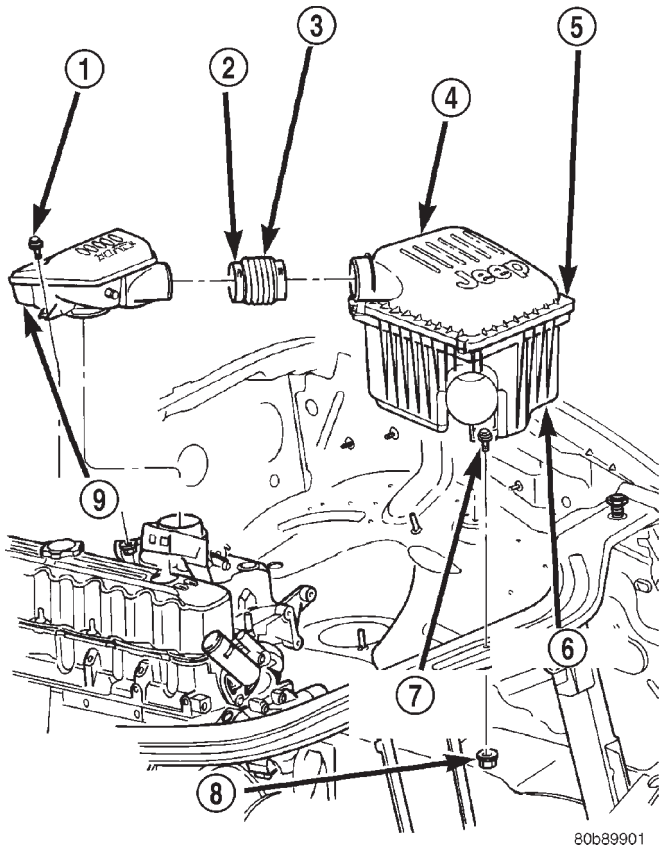

Fig. 6 Air Cleaner Assembly —4.0L Engine

1 - RESONATOR BOLTS
2 - CLAMPS
3 - AIR DUCT
4 - AIR CLEANER COVER
5 - CLIPS
6 - HOUSING
7 - HOUSING BOLTS (3)
8 - LOWER HOUSING NUTS (3)
9 - RESONATOR

(3) **Each of the 3 air cleaner housing mounting bolts is attached with 2 nuts (an upper nut and lower nut). DO NOT REMOVE BOLTS. To prevent stripping bolts, only remove lower nuts. The lower housing nuts are located under left front inner fender (Fig. 6).**

(a) To gain access to lower nuts, raise vehicle.

(b) Remove clips retaining rubber inner fender shield.

(c) Pry back shield enough to gain access to lower nuts.

(d) Remove 3 nuts.

(e) Remove air cleaner assembly from vehicle.

(4) If resonator is to be removed, disconnect breather tube at resonator, disconnect air duct clamp at resonator (Fig. 6)and remove 1 resonator mounting bolt. Remove resonator from throttle body by loosening clamp (Fig. 7).

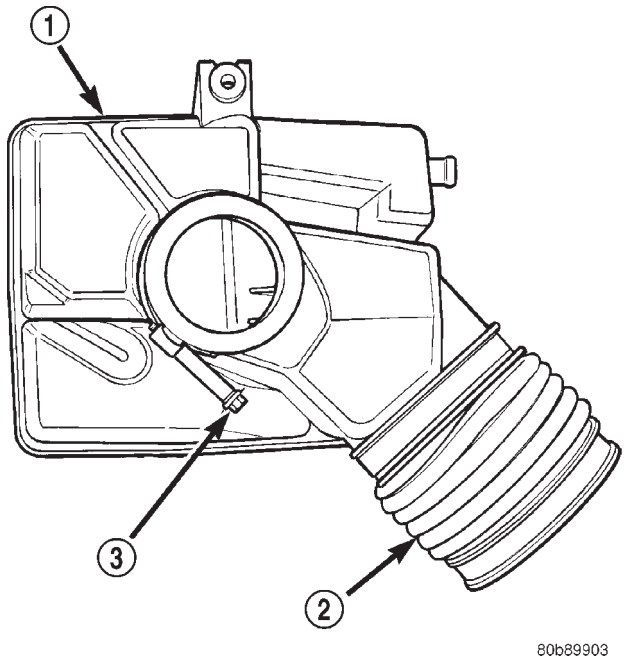

Fig. 7 RESONATOR CLAMP - 4.0L

1 - RESONATOR
2 - AIR DUCT
3 - CLAMP

INSTALLATION - 4.0L

(1) Position air cleaner assembly to body and install 3 nuts. Tighten nuts to 10 N·m (93 in. lbs.) torque. **To prevent excessive vibration transmitted through housing, the nuts must be properly torqued. Do not overtighten nuts.**

(2) If resonator was removed: Install resonator and bolts. Tighten bolts to 4 N·m (35 in. lbs.) torque. Tighten clamp at throttle body to 4 N·m (35 in. lbs.) torque.

(3) Position fender liner and install clips.

(4) Connect air duct at housing (Fig. 6).

(5) Tighten air duct clamp.

CYLINDER HEAD

DESCRIPTION

The cylinder head is made of cast iron containing twelve valves made of chrome plated heat resistant steel, valve stem seals, springs, retainers and keepers. The cylinder head and valve seats can be resurfaced for service purposes.

The valve guides are integral to the cylinder head, They are not replaceable. However, they are serviceable.

The cylinder head uses dual quench-type design combustion chambers which cause turbulence in the

CYLINDER HEAD (Continued)

cylinders allowing faster burning of the air/fuel mixture, resulting in better fuel economy (Fig. 8).

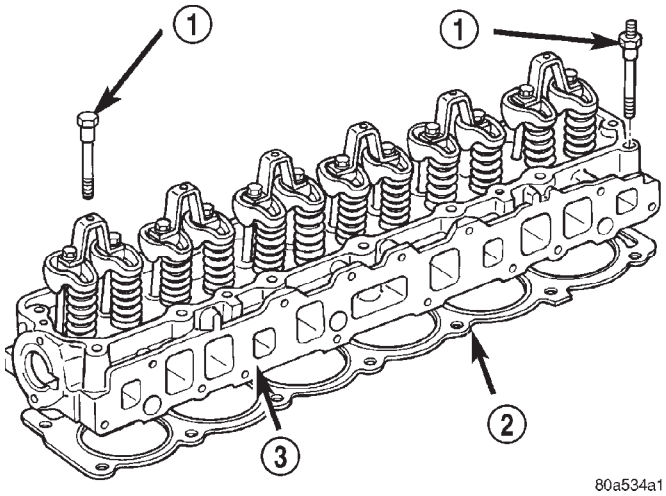

Fig. 8 Cylinder Head 4.0L Engine

1 - CYLINDER HEAD BOLTS
2 - CYLINDER HEAD GASKET
3 - CYLINDER HEAD

REMOVAL

NOTE: This procedure can be done with the engine in or out of the vehicle.

(1) Disconnect the battery negative cable.

WARNING: DO NOT REMOVE THE CYLINDER BLOCK DRAIN PLUGS OR LOOSEN THE RADIATOR DRAIN COCK WITH THE SYSTEM HOT AND PRESSURIZED BECAUSE SERIOUS BURNS FROM THE COOLANT CAN OCCUR.

(2) Drain the coolant (Refer to 7 - COOLING - STANDARD PROCEDURE) and disconnect the hoses at the engine thermostat housing and the water pump inlet. DO NOT waste reusable coolant. If the solution is clean and is being drained only to service the engine or cooling system, drain the coolant into a clean container for reuse.

(3) Remove the air cleaner assembly (Refer to 9 - ENGINE/AIR INTAKE SYSTEM/AIR CLEANER HOUSING - REMOVAL).

(4) Remove the cylinder head cover (Refer to 9 - ENGINE/CYLINDER HEAD/CYLINDER HEAD COVER(S) - REMOVAL).

(5) Remove the capscrews, bridge and pivot assemblies and rocker arms (Refer to 9 - ENGINE/CYLINDER HEAD/ROCKER ARM / ADJUSTER ASSY - REMOVAL).

(6) Remove the push rods. **Retain the push rods, bridges, pivots and rocker arms in the same order as removed.**

(7) Remove the accessory drive belt (Refer to 7 - COOLING/ACCESSORY DRIVE/DRIVE BELTS - REMOVAL).

(8) Remove the A/C compressor mounting bolts and secure the compressor to the side.

(9) Remove the power steering pump and bracket from the intake manifold and water pump. Set the pump and bracket aside. DO NOT disconnect the hoses.

(10) Perform the Fuel System Pressure Release procedure. (Refer to 14 - FUEL SYSTEM/FUEL DELIVERY - STANDARD PROCEDURE).

(11) Disconnect the fuel supply line at the fuel rail.

(12) Remove the intake and exhaust manifolds from the engine cylinder head (Refer to 9 - ENGINE/MANIFOLDS/INTAKE MANIFOLD - REMOVAL).

(13) Remove the coil rail (Refer to 8 - ELECTRICAL/IGNITION CONTROL/COIL RAIL - REMOVAL).

(14) Remove spark plugs (Refer to 8 - ELECTRICAL/IGNITION CONTROL/SPARK PLUG - REMOVAL).

(15) Disconnect the temperature sending unit wire connector.

(16) Remove the engine cylinder head bolts. Bolt No.14 cannot be removed until the head is moved forward (Fig. 9) . Pull bolt No.14 out as far as it will go and then suspend the bolt in this position (tape around the bolt).

(17) Remove the engine cylinder head and gasket (Fig. 9).

(18) If this was the first time the bolts were removed, put a paint dab on the top of the bolt. If the bolts have a paint dab on the top of the bolt or it isn't known if they were used before, discard the bolts.

(19) Stuff clean lint free shop towels into the cylinder bores.

NOTE: If the valves, springs, or seals are to be inspected/replaced at this time, (Refer to 9 - ENGINE/CYLINDER HEAD/INTAKE/EXHAUST VALVES & SEATS - STANDARD PROCEDURE) for proper inspection procedures.

CLEANING

Thoroughly clean the engine cylinder head and cylinder block mating surfaces. Clean the intake and engine exhaust manifold and engine cylinder head mating surfaces. Remove all gasket material and carbon.

Check to ensure that no coolant or foreign material has fallen into the tappet bore area.

Remove the carbon deposits from the combustion chambers and top of the pistons.

CYLINDER HEAD (Continued)

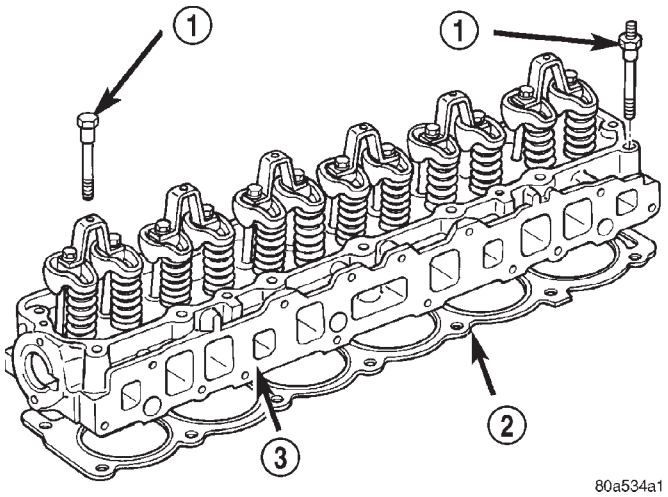

Fig. 9 Engine Cylinder

1 - CYLINDER HEAD BOLTS
2 - CYLINDER HEAD GASKET
3 - CYLINDER HEAD

INSPECTION

Use a straightedge and feeler gauge to check the flatness of the engine cylinder head and block mating surfaces.

INSTALLATION

NOTE: This procedure can be done with the engine in or out of the vehicle.

The engine cylinder head gasket is a composition gasket. The gasket is to be installed DRY. **DO NOT use a gasket sealing compound on the gasket.**

If the engine cylinder head is to be replaced and the original valves used, measure the valve stem diameter. Only standard size valves can be used with a service replacement engine cylinder head unless the replacement head valve stem guide bores are reamed to accommodate oversize valve stems. Remove all carbon buildup and reface the valves.

(1) Remove the shop towels from the cylinder bores. Coat the bores with clean engine oil.

(2) Position the engine cylinder head gasket (with the numbers facing up) using the alignment dowels in the cylinder block, to position the gasket.

CAUTION: Engine cylinder head bolts should be reused only once. Replace the head bolts if they were used before or if they have a paint dab on the top of the bolt.

(3) With bolt No.14 held in place (tape around bolt), install the engine cylinder head over the same dowels used to locate the gasket. Remove the tape from bolt No.14.

(4) Coat the threads of stud bolt No.11 with Loctite 592 sealant, or equivalent.

(5) Tighten the engine cylinder head bolts in sequence according to the following procedure (Fig. 10).

CAUTION: During the final tightening sequence, bolt No.11 will be tightened to a lower torque than the rest of the bolts. DO NOT overtighten bolt No.11.

(a) Tighten all bolts in sequence (1 through 14) to 30 N·m (22 ft. lbs.) torque.

(b) Tighten all bolts in sequence (1 through 14) to 61 N·m (45 ft. lbs.) torque.

(c) Check all bolts to verify they are set to 61 N·m (45 ft. lbs.) torque.

(d) Tighten bolts in sequence:

- Bolts 1 through 10 to 149 N·m (110 ft. lbs.) torque.
- Bolt 11 to 135 N·m (100 ft. lbs.) torque.
- Bolts 12 through 14 to 149 N·m (110 ft. lbs.) torque.

CYLINDER HEAD BOLTS

POSITION	DESCRIPTION
1,4,5,12,13	1/2 in.-13 BOLT
8,9	1/2 in.-13 BOLT WITH DOWEL POINT
2,3,6,7,10,11,14	1/2 in.-13 WITH 7/16 in.-14 STUD END
All bolts are 12 point drives for rocker cover clearance	

(e) Check all bolts in sequence to verify the correct torque.

(f) If not already done, clean and mark each bolt with a dab of paint after tightening. Should you encounter bolts which were painted in an earlier service operation, replace them.

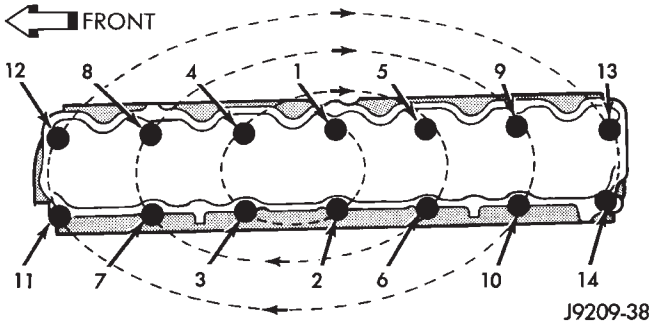

Fig. 10 Engine Cylinder Head Bolt Tightening Sequence

CYLINDER HEAD (Continued)

(6) Install the spark plugs (Refer to 8 - ELECTRICAL/IGNITION CONTROL/SPARK PLUG - INSTALLATION).

(7) Connect the temperature sending unit wire connector.

(8) Install the ignition coil rail (Refer to 8 - ELECTRICAL/IGNITION CONTROL/COIL RAIL - INSTALLATION).

(9) Install the intake and exhaust manifolds (Refer to 9 - ENGINE/MANIFOLDS/INTAKE MANIFOLD - INSTALLATION).

(10) Install the fuel line.

(11) Attach the power steering pump and bracket.

(12) Install the push rods, rocker arms, pivots and bridges in the order they were removed (Refer to 9 - ENGINE/CYLINDER HEAD/ROCKER ARM / ADJUSTER ASSY - INSTALLATION).

(13) Install the engine cylinder head cover (Refer to 9 - ENGINE/CYLINDER HEAD/CYLINDER HEAD COVER(S) - INSTALLATION).

(14) Attach the air conditioner compressor mounting bracket to the engine cylinder head and block. Tighten the bolts to 40 N·m (30 ft. lbs.) torque.

(15) Attach the air conditioning compressor to the bracket. Tighten the bolts to 27 N·m (20 ft. lbs.) torque.

CAUTION: The serpentine drive belt must be routed correctly. Incorrect routing can cause the water pump to turn in the opposite direction causing the engine to overheat.

(16) Install the serpentine drive belt. (Refer to 7 - COOLING/ACCESSORY DRIVE/DRIVE BELTS - INSTALLATION).

(17) Install the air cleaner and ducting.

(18) Connect the hoses to the engine thermostat housing and fill the cooling system to the specified level (Refer to 7 - COOLING - STANDARD PROCEDURE).

(19) The automatic transmission throttle linkage and cable must be adjusted after completing the engine cylinder head installation (Refer to 21 - TRANSMISSION/TRANSAXLE/AUTOMATIC - AW4/ THROTTLE VALVE CABLE - ADJUSTMENTS).

(20) Install the temperature sending unit and connect the wire connector.

(21) If equipped with air conditioning, install A/C compressor (Refer to 24 - HEATING & AIR CONDITIONING/PLUMBING/A/C COMPRESSOR - INSTALLATION) and charge A/C system (Refer to 24 - HEATING & AIR CONDITIONING/PLUMBING - STANDARD PROCEDURE).

(22) Connect negative cable to battery.

WARNING: USE EXTREME CAUTION WHEN THE ENGINE IS OPERATING. DO NOT STAND IN DIRECT LINE WITH THE FAN. DO NOT PUT HANDS NEAR THE PULLEYS, BELTS OR FAN. DO NOT WEAR LOOSE CLOTHING.

(23) Operate the engine with the radiator cap off. Inspect for leaks and continue operating the engine until the engine thermostat opens. Add coolant, if required.

CYLINDER HEAD COVER(S)

DESCRIPTION

The cylinder head cover (Fig. 11) is made of stamped steel and incorporates the Crankcase Ventilation (CCV) Hoses and the oil fill opening.

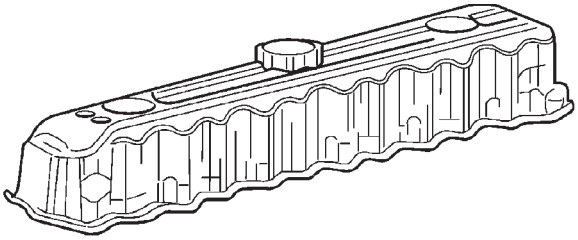

80bcea5b

Fig. 11 Cylinder Head Cover

REMOVAL

The cylinder head cover is isolated from the cylinder head via grommets and a reusable molded rubber gasket. The grommet and limiter are retained in the cylinder head cover.

(1) Disconnect negative cable from battery.

(2) Disconnect the Crankcase Ventilation (CCV) vacuum hose from engine cylinder head cover.

(3) Disconnect the fresh air inlet hose from the engine cylinder head cover.

(4) Disconnect the accelerator, transmission, and speed (if equipped) control cables from the throttle body (Fig. 12).

(5) Remove the three bolts that fasten the control cable bracket to the intake manifold.

(6) Remove control cables from cylinder head cover clip.

(7) Position control cables and bracket away from cylinder head cover secure with tie straps.

(8) Remove the engine cylinder head cover mounting bolts.

(9) Remove the engine cylinder head cover and gasket.

CYLINDER HEAD COVER(S) (Continued)

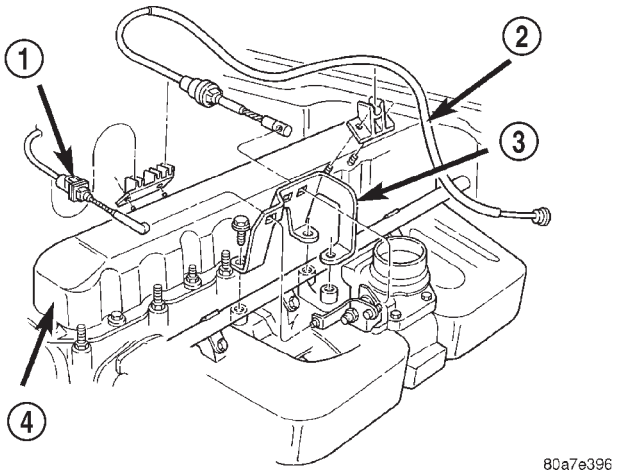

Fig. 12 Engine Cylinder Head Cover

1 - TRANS CONTROL CABLE
2 - ACCELERATOR CABLE
3 - CONTROL CABLE BRACKET
4 - CYLINDER HEAD COVER

CLEANING

Remove any original sealer from the cover sealing surface of the engine cylinder head and clean the surface using a fabric cleaner.

Remove all residue from the sealing surface using a clean, dry cloth.

INSPECTION

Inspect the engine cylinder head cover for cracks. Replace the cover, if cracked.

The original dark grey gasket material should NOT be removed. If sections of the gasket material are missing or are compressed, replace the engine cylinder head cover. However, sections with minor damage such as small cracks, cuts or chips may be repaired with a hand held applicator. The new material must be smoothed over to maintain gasket height. Allow the gasket material to cure prior to engine cylinder head cover installation.

INSTALLATION

The cylinder head cover is isolated from the cylinder head via grommets and a reusable molded rubber gasket. The grommet and limiter are retained in the cylinder head cover.

(1) If a replacement cover is installed, transfer the CCV valve grommet and oil filler cap from the original cover to the replacement cover.

(2) Install cylinder head cover and gasket (Fig. 13). Tighten the mounting bolts to 10 N·m (85 in. lbs.) torque.

(3) Connect the CCV hoses.

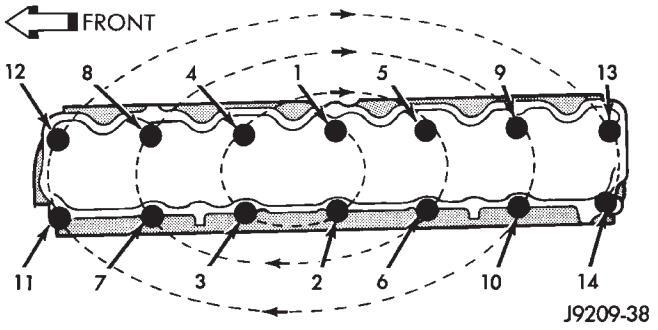

Fig. 13 Cylinder Head Cover Gasket Locator Pins at #8 & #9

(4) Install control cables and bracket on intake manifold and tighten bolts to 8.7 N·m (77 in. lbs.) torque.

(5) Connect control cables to throttle body linkage.

(6) Snap control cables into cylinder head cover clip.

(7) Connect negative cable to battery.

INTAKE/EXHAUST VALVES & SEATS

DESCRIPTION

The valves are made of heat resistant steel and have chrome plated stems to prevent scuffing. All valves use three bead locks to promote valve rotation (Fig. 14).

STANDARD PROCEDURE - VALVE SERVICE

VALVE REFACING

Clean all carbon deposits from the combustion chambers, valve ports, valve stems, valve stem guides and head.

(1) Use a valve refacing machine to reface the intake and exhaust valves to the specified angle.

(2) After refacing, a margin of at least 0.787 mm (0.031 inch) must remain (Fig. 15). If the margin is less than 0.787 mm (0.031 inch), the valve must be replaced.

VALVE SEAT REFACING

Clean all carbon deposits from the combustion chambers, valve ports, valve stems, valve stem guides and head.

(1) Install a pilot of the correct size in the valve guide bore. Reface the valve seat to the specified angle with a good dressing stone. Remove only enough metal to provide a smooth finish.

(2) Use tapered stones to obtain the specified seat width when required.

INTAKE/EXHAUST VALVES & SEATS (Continued)

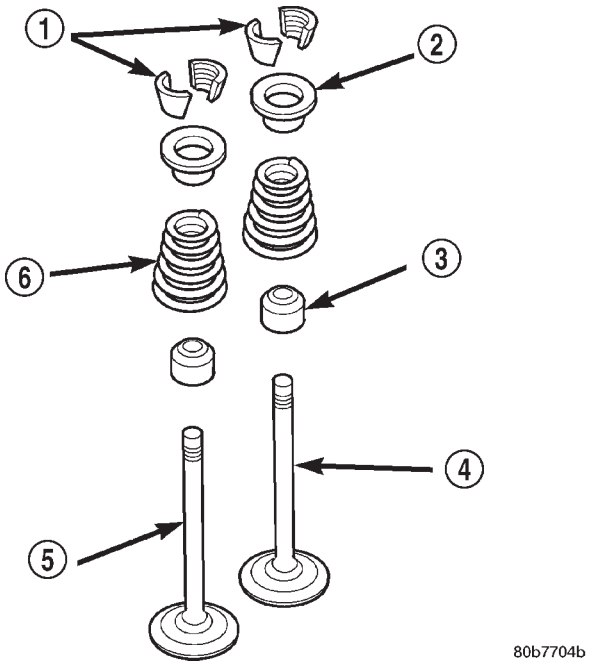

Fig. 14 VALVE AND KEEPER CONFIGURATION 4.0L

1 - VALVE LOCKS (3–BEAD)
2 - RETAINER
3 - VALVE STEM OIL SEAL
4 - INTAKE VALVE
5 - EXHAUST VALVE
6 - VALVE SPRING

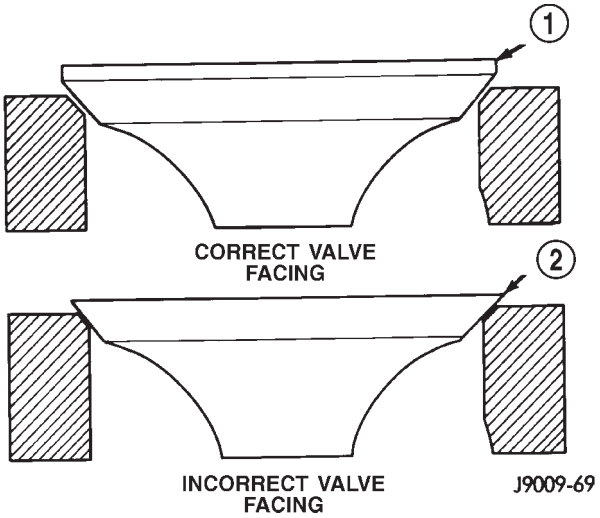

Fig. 15 Valve Facing

1 - VALVE MARGIN
2 - NO MARGIN

(3) Control valve seat runout to a maximum of 0.0635 mm (0.0025 in.) (Fig. 16).

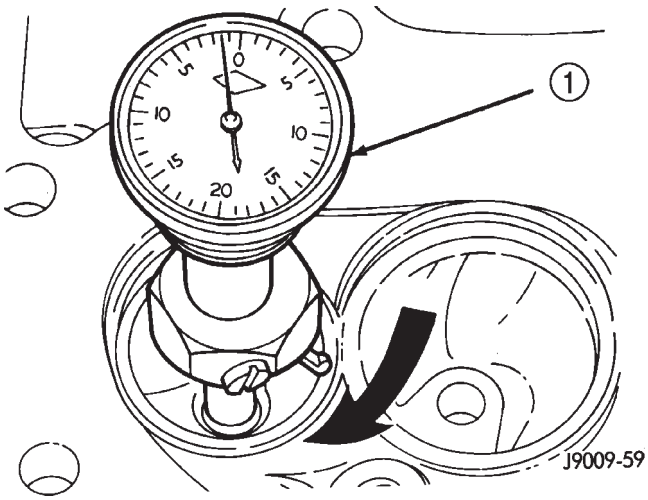

Fig. 16 Measurement of Valve Seat Runout

1 - DIAL INDICATOR

VALVE STEM-TO-GUIDE CLEARANCE MEASUREMENT

PREFERRED METHOD

(1) Remove the valve from the head.

(2) Clean the valve stem guide bore with solvent and a bristle brush.

(3) Insert a telescoping gauge into the valve stem guide bore approximately 9.525 mm (.375 inch) from the valve spring side of the head (Fig. 17).

(4) Remove and measure telescoping gauge with a micrometer.

(5) Repeat the measurement with contacts lengthwise to engine cylinder head.

(6) Compare the crosswise to lengthwise measurements to determine out-of-roundness. If the measurements differ by more than 0.0635 mm (0.0025 in.), ream the guide bore to accommodate an oversize valve stem.

(7) Compare the measured valve guide bore diameter with specifications (7.95-7.97 mm or 0.313-0.314 inch). If the measurement differs from specification by more than 0.076 mm (0.003 inch), ream the guide bore to accommodate an oversize valve stem.

ALTERNATIVE METHOD

(1) Use a dial indicator to measure the lateral movement of the valve stem (stem-to-guide clearance). This must be done with the valve installed in its guide and just off the valve seat (Fig. 18).

(2) Correct clearance is 0.025-0.0762 mm (0.001-0.003 inch). If indicated movement exceeds the specification ream the valve guide to accommodate an oversize valve stem.

INTAKE/EXHAUST VALVES & SEATS (Continued)

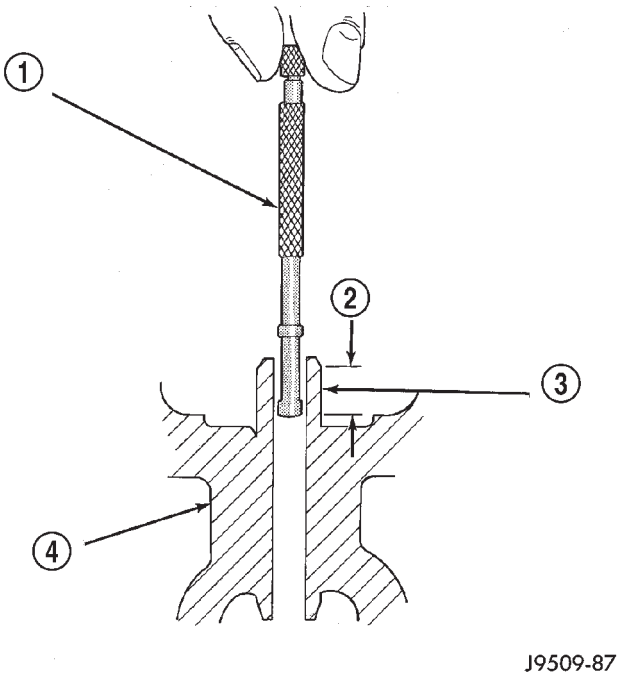

Fig. 17 Measurement of Valve Guide Bore Diameter

1 - GAUGE
2 - 9.525 MM (3/8 INCH)
3 - VALVE STEM GUIDE
4 - CYLINDER HEAD

NOTE: Valve seats must be ground after reaming the valve guides to ensure that the valve seat is concentric to the valve guide.

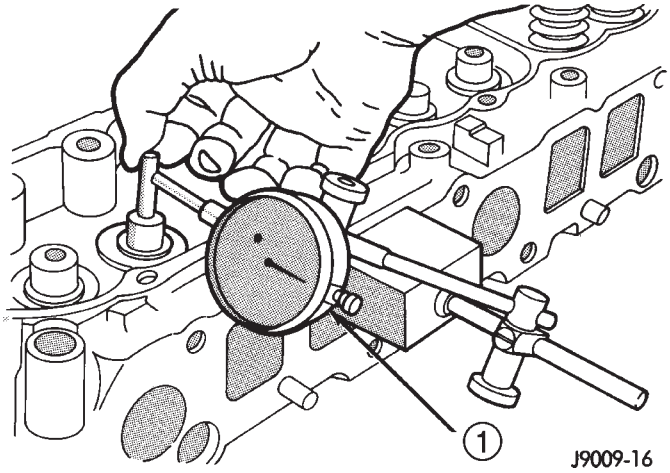

Fig. 18 Measurement of Lateral Movement Of Valve Stem

1 - DIAL INDICATOR

REMOVAL

NOTE: This procedure is done with the engine cylinder head removed from the block.

(1) Remove the engine cylinder head (Refer to 9 - ENGINE/CYLINDER HEAD - REMOVAL) from the cylinder block.

(2) Use Valve Spring Compressor Tool MD-998772A and compress each valve spring.

(3) Remove the valve locks, retainers, springs and valve stem oil seals. Discard the oil seals (Fig. 19).

(4) Use a smooth stone or a jewelers file to remove any burrs on the top of the valve stem, especially around the groove for the locks.

(5) Remove the valves, and place them in a rack in the same order as removed.

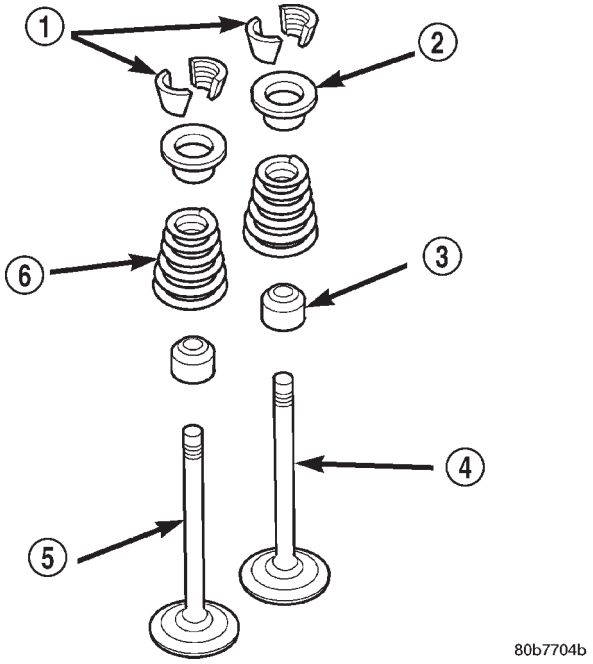

Fig. 19 Valve and Valve Components

1 - VALVE LOCKS (3–BEAD)
2 - RETAINER
3 - VALVE STEM OIL SEAL
4 - INTAKE VALVE
5 - EXHAUST VALVE
6 - VALVE SPRING

INSTALLATION

NOTE: This procedure is done with the engine cylinder head removed from the block.

(1) Thoroughly clean the valve stems and the valve guide bores.

(2) Lightly lubricate the stem.

(3) Install the valve in the original valve guide bore.

(4) Install the replacement valve stem oil seals on the valve stems (Fig. 20). If the 0.381 mm (0.015 inch) oversize valve stems are used, oversize oil seals are required.

INTAKE/EXHAUST VALVES & SEATS (Continued)

(5) Position the valve spring and retainer on the engine cylinder head and compress the valve spring with Valve Spring Compressor Tool MD-998772A.

(6) Install the valve locks and release the tool.

(7) Tap the valve spring from side to side with a hammer to ensure that the spring is properly seated at the engine cylinder head. Also tap the top of the retainer to seat the valve locks.

(8) Install the engine cylinder head (Refer to 9 - ENGINE/CYLINDER HEAD - INSTALLATION).

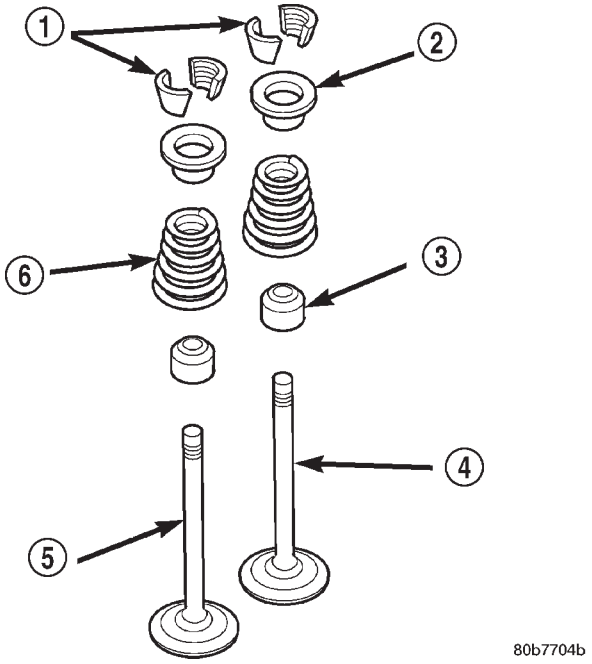

Fig. 20 Valve and Valve Components

1 - VALVE LOCKS (3–BEAD)
2 - RETAINER
3 - VALVE STEM OIL SEAL
4 - INTAKE VALVE
5 - EXHAUST VALVE
6 - VALVE SPRING

ROCKER ARM / ADJUSTER ASSEMBLY

DESCRIPTION

The rocker arms are made of stamped steel and have a operational ratio of 1.6:1 (Fig. 21).

OPERATION

When the push rods are forced upward by the camshaft lobes the push rod presses upward on the rocker arms, the rocker arms pivot, forcing downward pressure on the valves forcing the valves to move downward and off from their seats.

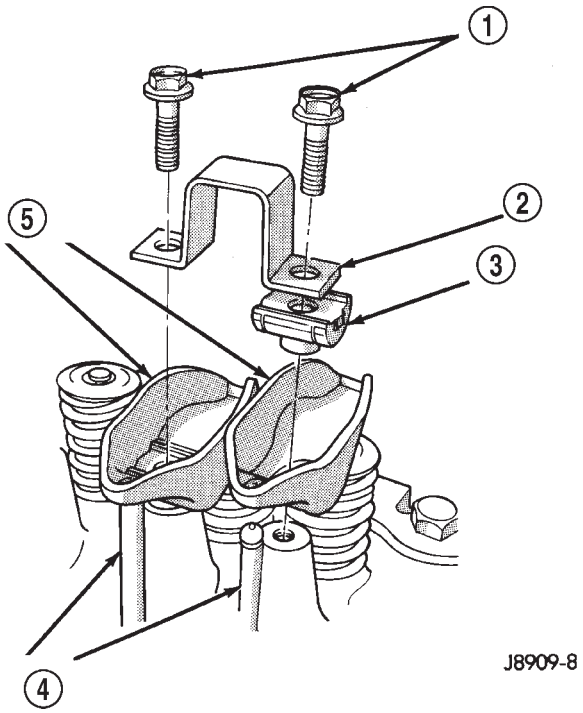

Fig. 21 Rocker Arms—Typical

1 - CAPSCREWS
2 - BRIDGE
3 - PIVOT ASSEMBLY
4 - PUSH RODS
5 - ROCKER ARMS

REMOVAL

NOTE: This procedure can be done with the engine in or out of the vehicle.

(1) Remove the cylinder head cover (Refer to 9 - ENGINE/CYLINDER HEAD/CYLINDER HEAD COVER(S) - REMOVAL).

(2) Check for rocker arm bridges which are causing misalignment of the rocker arm to valve tip area.

(3) Remove the capscrews at each bridge and pivot assembly (Fig. 22). Alternately loosen the capscrews one turn at a time to avoid damaging the bridges.

(4) Remove the bridges, pivots and corresponding pairs of rocker arms (Fig. 22). Place them on a bench in the same order as removed.

(5) Remove the push rods and place them on a bench in the same order as removed.

CLEANING

Clean all the components with cleaning solvent.

Use compressed air to blow out the oil passages in the rocker arms and push rods.

ROCKER ARM / ADJUSTER ASSEMBLY (Continued)

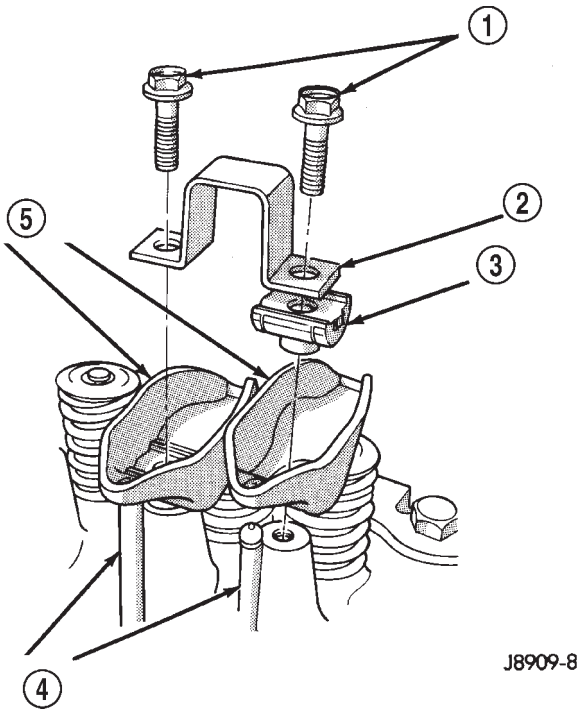

Fig. 22 Rocker Arm

1 - CAPSCREWS
2 - BRIDGE
3 - PIVOT ASSEMBLY
4 - PUSH RODS
5 - ROCKER ARMS

INSPECTION

Inspect the pivot surface area of each rocker arm. Replace any that are scuffed, pitted, cracked or excessively worn.

Inspect the valve stem tip contact surface of each rocker arm and replace any rocker arm that is deeply pitted.

Inspect each push rod end for excessive wear and replace as required. If any push rod is excessively worn because of lack of oil, replace it and inspect the corresponding hydraulic tappet for excessive wear.

Inspect the push rods for straightness by rolling them on a flat surface or by shining a light between the push rod and the flat surface.

A wear pattern along the length of the push rod is not normal. Inspect the engine cylinder head for obstruction if this condition exists.

INSTALLATION

NOTE: This procedure can be done with the engine in or out of the vehicle.

(1) Lubricate the ball ends of the push rods with Mopar® Engine Oil Supplement, or equivalent and install push rods in their original locations. Ensure that the bottom end of each push rod is centered in the tappet plunger cap seat.

(2) Using Mopar® Engine Oil Supplement, or equivalent, lubricate the area of the rocker arm that the pivot contacts. Install rocker arms, pivots and bridge above each cylinder in their originally position (Fig. 23).

(3) Loosely install the capscrews through each bridge.

(4) At each bridge, tighten the capscrews alternately, one turn at a time, to avoid damaging the bridge. Tighten the capscrews to 28 N·m (21 ft. lbs.) torque.

(5) Install the engine cylinder head cover (Refer to 9 - ENGINE/CYLINDER HEAD/CYLINDER HEAD COVER(S) - INSTALLATION).

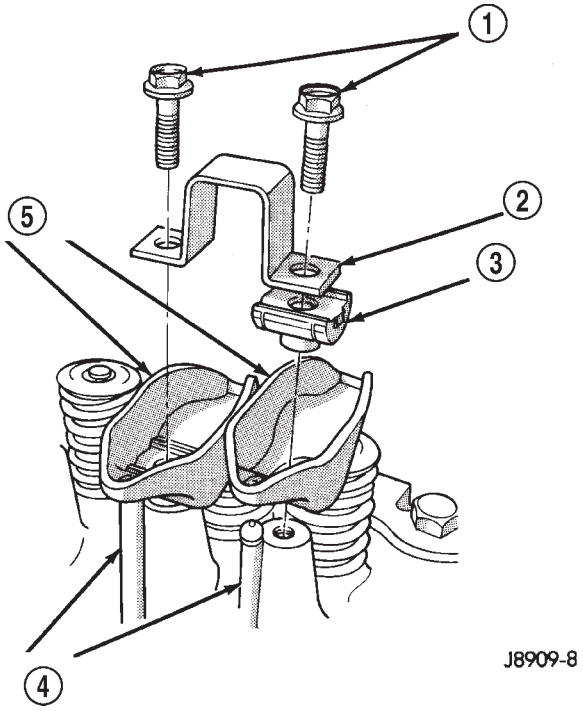

Fig. 23 Rocker Arm

1 - CAPSCREWS
2 - BRIDGE
3 - PIVOT ASSEMBLY
4 - PUSH RODS
5 - ROCKER ARMS

VALVE STEM SEALS

DESCRIPTION

The valve stem seals (Fig. 24) are made of rubber and incorporate a garter spring to maintain consistent lubrication control.

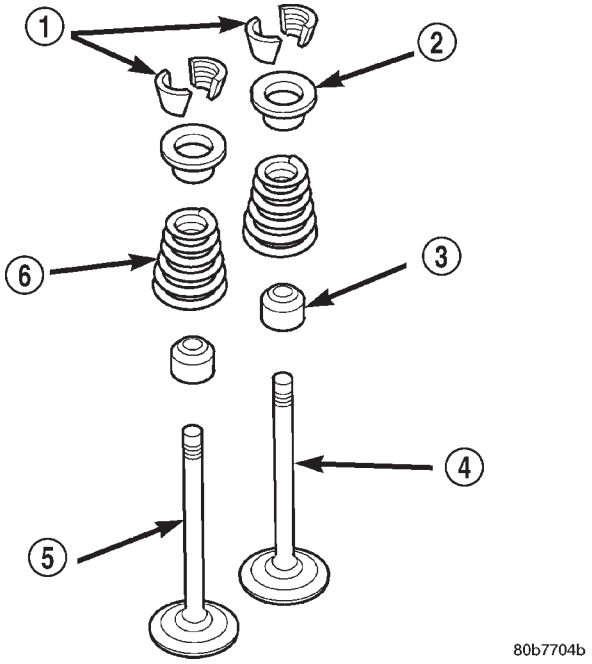

Fig. 24 Valve

1 - VALVE LOCKS (3–BEAD)
2 - RETAINER
3 - VALVE STEM OIL SEAL
4 - INTAKE VALVE
5 - EXHAUST VALVE
6 - VALVE SPRING

VALVE SPRINGS

DESCRIPTION

The valve springs (Fig. 25) are made of high strength silicon chrome spring steel. The springs are common for both intake and exhaust valves.

STANDARD PROCEDURE - VALVE SPRING TENSION TEST

Clean all carbon deposits from the combustion chambers, valve ports, valve stems, valve stem guides and head.

Use a universal Valve Spring Tester and a torque wrench to test each valve spring for the specified tension value (Fig. 26).

Replace valve springs that are not within specifications.

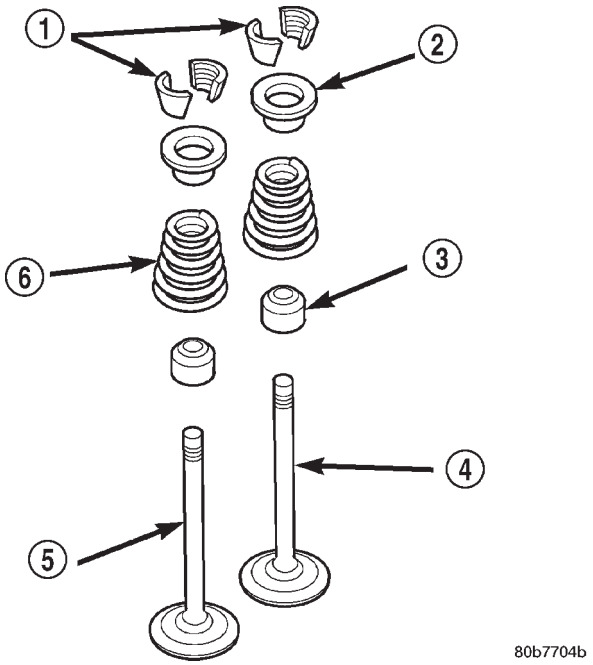

Fig. 25 VALVE AND KEEPER CONFIGURATION 4.0L

1 - VALVE LOCKS (3–BEAD)
2 - RETAINER
3 - VALVE STEM OIL SEAL
4 - INTAKE VALVE
5 - EXHAUST VALVE
6 - VALVE SPRING

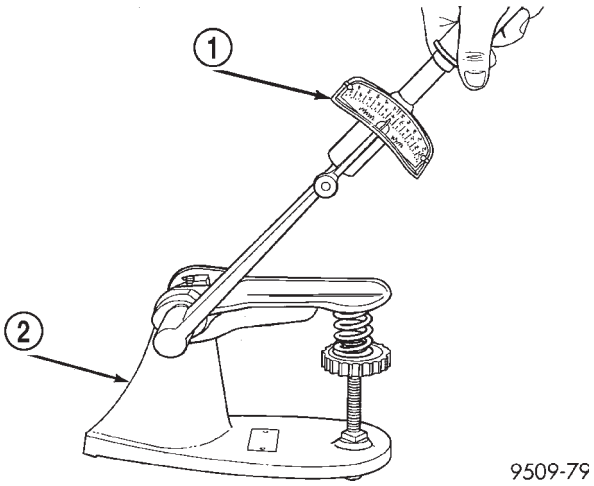

Fig. 26 Valve Spring Tester

1 - TORQUE WRENCH
2 - VALVE SPRING TESTER

REMOVAL

NOTE: This procedure can be done with the engine cylinder head installed on the block.

VALVE SPRINGS (Continued)

Inspect the valve stems, especially the grooves. An Arkansas smooth stone should be used to remove nicks and high spots.

Each valve spring is held in place by a retainer and a set of conical valve locks. The locks can be removed only by compressing the valve spring.

(1) Remove the engine cylinder head cover (Refer to 9 - ENGINE/CYLINDER HEAD/CYLINDER HEAD COVER(S) - REMOVAL).

(2) Remove cap screws, bridge and pivot assemblies and rocker arms (Refer to 9 - ENGINE/CYLINDER HEAD/ROCKER ARM / ADJUSTER ASSY - REMOVAL) for access to each valve spring to be removed.

(3) Remove push rods. **Retain the push rods, bridges, pivots and rocker arms in the same order and position as removed.**

(4) Inspect the springs and retainer for cracks and possible signs of weakening.

(5) Remove the spark plug(s) adjacent to the cylinder(s) below the valve springs to be removed.

(6) Connect an air hose to the adapter and apply air pressure slowly. Maintain at least 621 kPa (90 psi) of air pressure in the cylinder to hold the valves against their seats. For vehicles equipped with an air conditioner, use a flexible air adaptor when servicing the No.1 cylinder.

(7) Tap the retainer or tip with a rawhide hammer to loosen the lock from the retainer. Use Valve Spring Compressor Tool MD-998772A to compress the spring and remove the locks (Fig. 27).

(8) Remove valve spring and retainer (Fig. 27).

(9) Remove valve stem oil seals (Fig. 27). Note the valve seals are different for intake and exhaust valves. The top of each seal is marked either INT (intake/black in color) or EXH (exhaust/brown in color). DO NOT mix the seals.

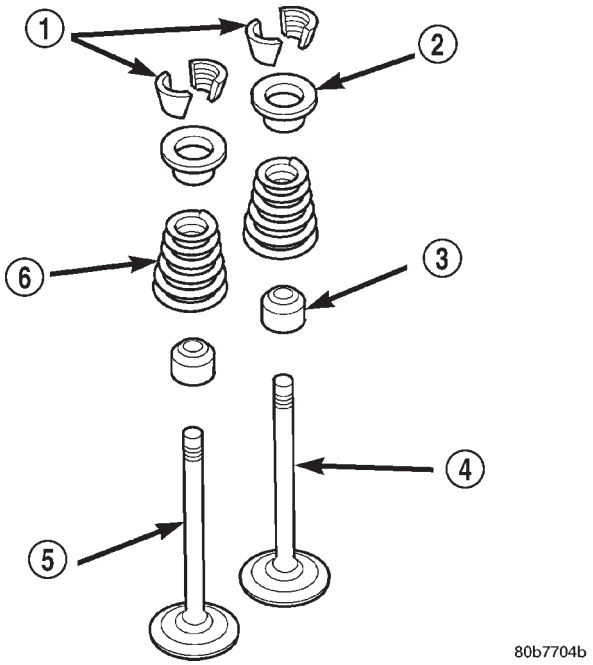

Fig. 27 Valve and Valve Components

1 - VALVE LOCKS (3–BEAD)
2 - RETAINER
3 - VALVE STEM OIL SEAL
4 - INTAKE VALVE
5 - EXHAUST VALVE
6 - VALVE SPRING

INSTALLATION

NOTE: This procedure can be done with the engine cylinder head installed on the block.

CAUTION: Install oil seals carefully to prevent damage from the sharp edges of the valve spring lock grove.

(1) Lightly push the valve seal over the valve stem and valve guide boss. Be sure the seal is completely seated on the valve guide boss.

(2) Install valve spring and retainer (Fig. 28).

(3) Compress the valve spring with Valve Spring Compressor Tool MD-998772A and insert the valve locks. Release the spring tension and remove the tool. Tap the spring from side-to-side to ensure that the spring is seated properly on the engine cylinder head.

(4) Release air pressure and disconnect the air hose. Remove the adaptor from the spark plug hole and install the spark plug.

(5) Repeat the procedures for each remaining valve spring to be removed.

(6) Install the push rods. Ensure the bottom end of each rod is centered in the plunger cap seat of the hydraulic valve tappet.

(7) Install the rocker arms, pivots and bridge (Refer to 9 - ENGINE/CYLINDER HEAD/ROCKER ARM / ADJUSTER ASSY - INSTALLATION) at their original location.

(8) Install the engine cylinder head cover (Refer to 9 - ENGINE/CYLINDER HEAD/CYLINDER HEAD COVER(S) - INSTALLATION).

ENGINE BLOCK

CLEANING

Thoroughly clean the oil pan and engine block gasket surfaces.

Use compressed air to clean out:

- The galley at the oil filter adaptor hole.
- The front and rear oil galley holes.

ENGINE BLOCK (Continued)

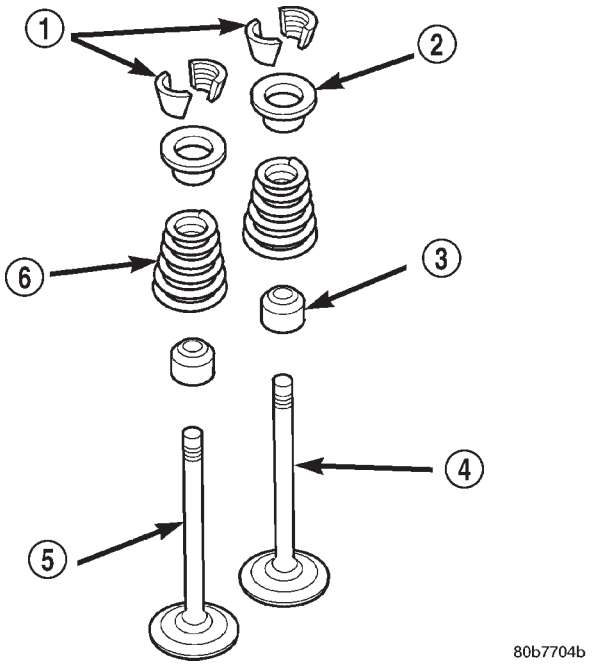

Fig. 28 Valve and Valve

1 - VALVE LOCKS (3–BEAD)
2 - RETAINER
3 - VALVE STEM OIL SEAL
4 - INTAKE VALVE
5 - EXHAUST VALVE
6 - VALVE SPRING

- The feed holes for the crankshaft main bearings.

Once the block has been completely cleaned, apply Loctite PST pipe sealant with Teflon 592 to the threads of the front and rear oil galley plugs. Tighten the plugs to 34 N·m (25 ft. lbs.) torque.

INSPECTION

(1) It is mandatory to use a dial bore gauge to measure each cylinder bore diameter (Fig. 29). To correctly select the proper size piston, a cylinder bore gauge, capable of reading in 0.003 mm (.0001 in.) INCREMENTS is required. If a bore gauge is not available, do not use an inside micrometer.

(2) Measure the inside diameter of the cylinder bore at three levels below top of bore. Start perpendicular (across or at 90 degrees) to the axis of the crankshaft and then take two additional reading.

(3) Measure the cylinder bore diameter crosswise to the cylinder block near the top of the bore. Repeat the measurement near the middle of the bore, then repeat the measurement near the bottom of the bore.

(4) Determine taper by subtracting the smaller diameter from the larger diameter.

(5) Rotate measuring device 90° and repeat steps above.

(6) Determine out-of-roundness by comparing the difference between each measurement.

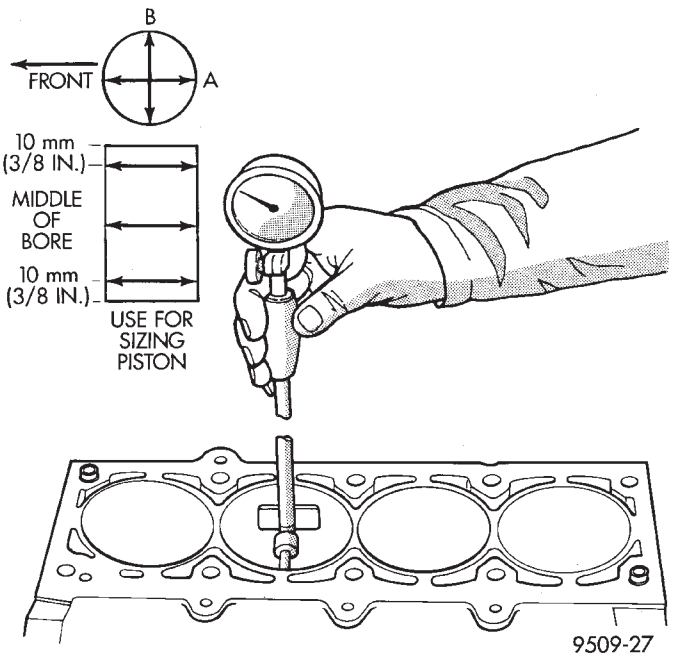

Fig. 29 Cylinder Bore Measurement

(7) If cylinder bore taper does not exceed 0.025 mm (0.001 inch) and out-of-roundness does not exceed 0.025 mm (0.001 inch), the cylinder bore can be honed. If the cylinder bore taper or out- of-round condition exceeds these maximum limits, the cylinder must be bored and then honed to accept an oversize piston. A slight amount of taper always exists in the cylinder bore after the engine has been in use for a period of time.

CAMSHAFT & BEARINGS

DESCRIPTION

The camshaft is made of gray cast iron with twelve machined lobes and four bearing journals (Fig. 30). When the camshaft rotates the lobes actuate the tappets and push rods, forcing upward on the rocker arms which applies downward force on the valves.

REMOVAL - CAMSHAFT BEARINGS

The camshaft rotates within four steel-shelled, babbitt-lined bearings that are pressed into the cylinder block and then line reamed. The camshaft bearing bores and bearing diameters are not the same size. They are stepped down in 0.254 mm (0.010 inch) increments from the front bearing (largest) to the rear bearing (smallest). This permits easier removal and installation of the camshaft. The camshaft bearings are pressure lubricated. Camshaft end play is maintained by the thrust plate.

CAMSHAFT & BEARINGS (Continued)

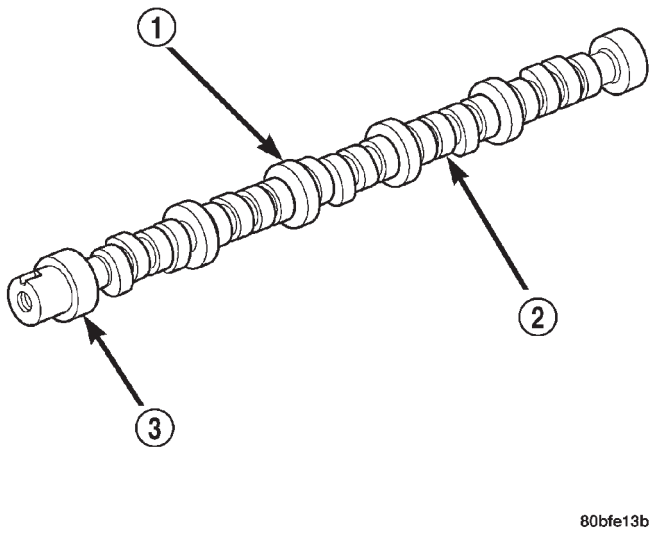

Fig. 30 Camshaft—Typical

1 - CAMSHAFT
2 - LOBES
3 - BEARING JOURNAL

(1) Remove the camshaft (Refer to 9 - ENGINE/ENGINE BLOCK/CAMSHAFT & BEARINGS (IN BLOCK) - REMOVAL).

NOTE: It is not advisable to attempt to replace camshaft bearings unless special removal and installation tools are available, such as recommended tool 8544 Camshaft Bushing Remover Installer.

(2) Using Special tool 8544 Camshaft Bushing Remover Installer, remove the camshaft bearings.

REMOVAL - CAMSHAFT

WARNING: THE COOLANT IN A RECENTLY OPERATED ENGINE IS HOT AND PRESSURIZED. RELEASE THE PRESSURE BEFORE REMOVING THE DRAIN COCK, CAP AND DRAIN PLUGS.

(1) Disconnect negative cable from battery.
(2) Drain the cooling system (Refer to 7 - COOLING - STANDARD PROCEDURE).
(3) Remove the radiator (Refer to 7 - COOLING/ENGINE/RADIATOR - REMOVAL) and condenser (Refer to 24 - HEATING & AIR CONDITIONING/PLUMBING/A/C CONDENSER - REMOVAL), if equipped with A/C.
(4) Remove the engine cylinder head cover (Refer to 9 - ENGINE/CYLINDER HEAD/CYLINDER HEAD COVER(S) - REMOVAL).
(5) Remove the rocker arms, bridges and pivots (Refer to 9 - ENGINE/CYLINDER HEAD/ROCKER ARM / ADJUSTER ASSY - REMOVAL).
(6) Remove the push rods.
(7) Remove the engine cylinder head and gasket (Refer to 9 - ENGINE/CYLINDER HEAD - REMOVAL).
(8) Remove the hydraulic valve tappets from the engine cylinder block (Refer to 9 - ENGINE/ENGINE BLOCK/HYDRAULIC LIFTERS (CAM IN BLOCK) - REMOVAL).
(9) Remove the vibration damper (Refer to 9 - ENGINE/ENGINE BLOCK/VIBRATION DAMPER - REMOVAL).
(10) Remove the timing case cover (Refer to 9 - ENGINE/VALVE TIMING/TIMING BELT / CHAIN COVER(S) - REMOVAL).
(11) Rotate the crankshaft until the crankshaft sprocket timing mark is aligned on centerline with the camshaft sprocket timing mark (Fig. 32).
(12) Remove the timing chain and sprockets (Refer to 9 - ENGINE/VALVE TIMING/TIMING BELT/CHAIN AND SPROCKETS - REMOVAL).
(13) Remove the front bumper and/or grille, as required.
(14) Remove the two thrust plate retaining screws, thrust plate and camshaft (Fig. 31).

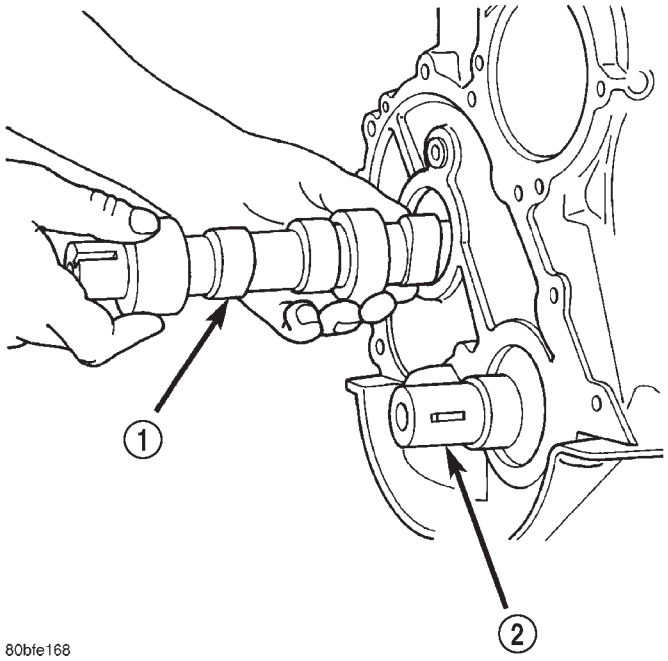

Fig. 31 Camshaft Removal

1 - CAMSHAFT
2 - CRANKSHAFT

INSPECTION - CAMSHAFT BEARINGS

(1) Inspect the bearing journals for uneven wear pattern or finish.

CAMSHAFT & BEARINGS (Continued)

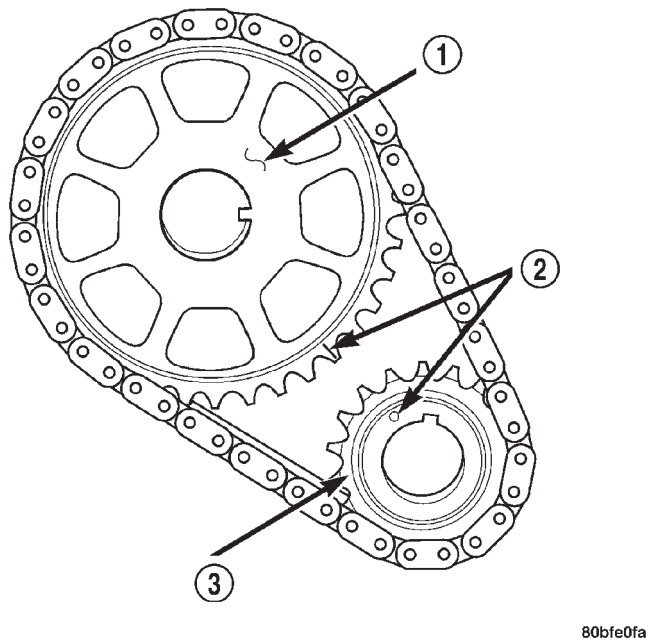

Fig. 32 Crankshaft / Camshaft Sprocket Timing Mark Alignment

1 - CAMSHAFT SPROCKET
2 - TIMING MARKS
3 - CRANKSHAFT SPROCKET

(2) Inspect the bearings for wear.

INSPECTION - CAMSHAFT

(1) Inspect the cam lobes for wear.

(2) Inspect the camshaft position sensor drive gear for wear.

(3) If the camshaft appears to have been rubbing against the thrust washer, examine the oil pressure relief holes in the rear cam journal. The oil pressure relief holes must be free of debris.

INSTALLATION - CAMSHAFT BEARINGS

CAUTION: Make sure outside diameter of number 1 bearing is clean. Make sure that the bearing is properly installed in the engine block, align the oil hole in the bearing with the oil gallery in the bearing bore. Failure to do so will cause inadequate oil supply for the sprockets and timing chain.

(1) Using recommended special tool 8544 Camshaft Bearing Remover/Installer, install new camshaft bearings.

INSTALLATION - CAMSHAFT

(1) Lubricate the camshaft with Mopar® Engine Oil Supplement, or equivalent.

(2) Carefully install the camshaft to prevent damage to the camshaft bearings.

(3) Position thrust plate and install retaining screws. Tighten screws to 24 N·m (18 ft. lbs.).

(4) Lubricate the camshaft with Mopar® engine oil supplement, or equivalent.

(5) Install the camshaft sprocket, crankshaft sprocket and timing chain (Refer to 9 - ENGINE/VALVE TIMING/TIMING BELT/CHAIN AND SPROCKETS - INSTALLATION).

(6) Tighten the camshaft sprocket bolt and washer to 68 N·m (50 ft. lbs.).

(7) To verify correct installation of the timing chain, turn the crankshaft two full revolutions then position the camshaft sprocket timing mark as shown in (Fig. 33).

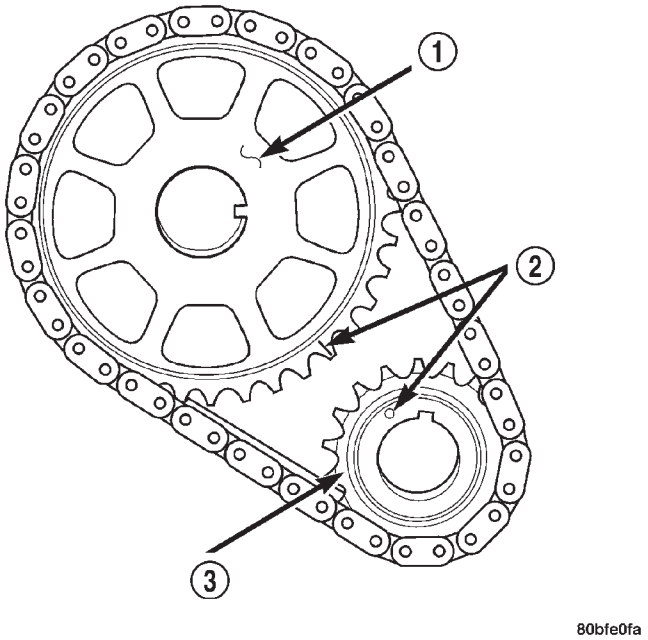

Fig. 33 Crankshaft / Camshaft Chain Drive Installation—Typical

1 - CAMSHAFT SPROCKET
2 - TIMING MARKS
3 - CRANKSHAFT SPROCKET

(8) Install the timing case cover with a replacement oil seal (Fig. 34). (Refer to 9 - ENGINE/VALVE TIMING/TIMING BELT / CHAIN COVER(S) - INSTALLATION).

(9) Install the vibration damper (Fig. 34) (Refer to 9 - ENGINE/ENGINE BLOCK/VIBRATION DAMPER - INSTALLATION).

(10) Install the hydraulic valve tappets (Refer to 9 - ENGINE/ENGINE BLOCK/HYDRAULIC LIFTERS (CAM IN BLOCK) - INSTALLATION).

(11) Install the cylinder head gasket with the numbers facing up.

CAMSHAFT & BEARINGS (Continued)

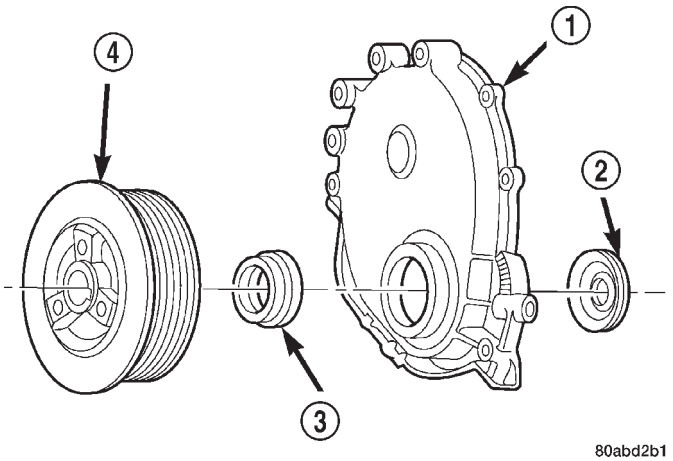

Fig. 34 Timing Case Cover Components

1 - TIMING CASE COVER
2 - OIL SLINGER
3 - CRANKSHAFT OIL SEAL
4 - VIBRATION DAMPER PULLEY

(12) Install the cylinder head (Refer to 9 - ENGINE/CYLINDER HEAD - INSTALLATION).

(13) Install the push rods.

(14) Install the rocker arms and pivot and bridge assemblies (Refer to 9 - ENGINE/CYLINDER HEAD/ ROCKER ARM / ADJUSTER ASSY - INSTALLATION).

(15) Install the engine cylinder head cover (Refer to 9 - ENGINE/CYLINDER HEAD/CYLINDER HEAD COVER(S) - INSTALLATION).

(16) Install the serpentine drive belt (Refer to 7 - COOLING/ACCESSORY DRIVE/DRIVE BELTS - INSTALLATION).

NOTE: During installation, lubricate the hydraulic valve tappets and all valve components with Mopar® Engine Oil Supplement, or equivalent. The Mopar® Engine Oil Supplement, or equivalent must remain with the engine oil for at least 1609 km (1,000 miles). The oil supplement need not be drained until the next scheduled oil change.

(17) Install the radiator (Refer to 7 - COOLING/ ENGINE/RADIATOR - INSTALLATION).

(18) Check the ignition timing and adjust as necessary.

(19) Install the grille and bumper, if removed.

(20) Connect negative cable to battery.

CONNECTING ROD BEARINGS

STANDARD PROCEDURES - FITTING CONNECTING ROD BEARINGS

Inspect the connecting rod bearings for scoring and bent alignment tabs (Fig. 35) (Fig. 36). Check the bearings for normal wear patterns, scoring, grooving, fatigue and pitting (Fig. 37). Replace any bearing that shows abnormal wear.

Inspect the connecting rod journals for signs of scoring, nicks and burrs.

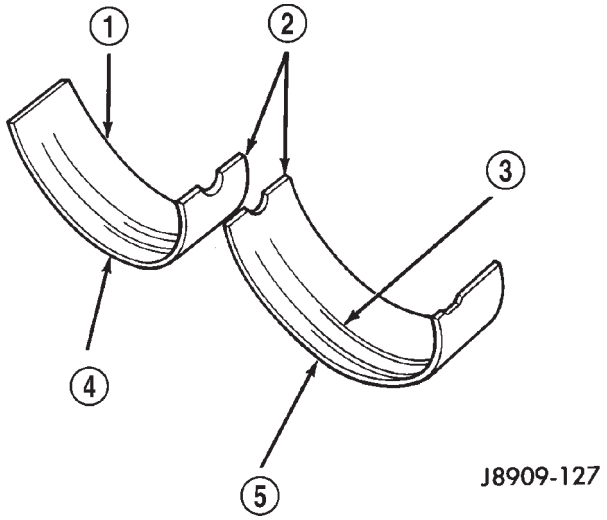

Fig. 35 Connecting Rod Bearing Inspection

1 - UPPER BEARING HALF
2 - MATING EDGES
3 - GROOVES CAUSED BY ROD BOLTS SCRATCHING JOURNAL DURING INSTALLATION
4 - WEAR PATTERN - ALWAYS GREATER ON UPPER BEARING
5 - LOWER BEARING HALF

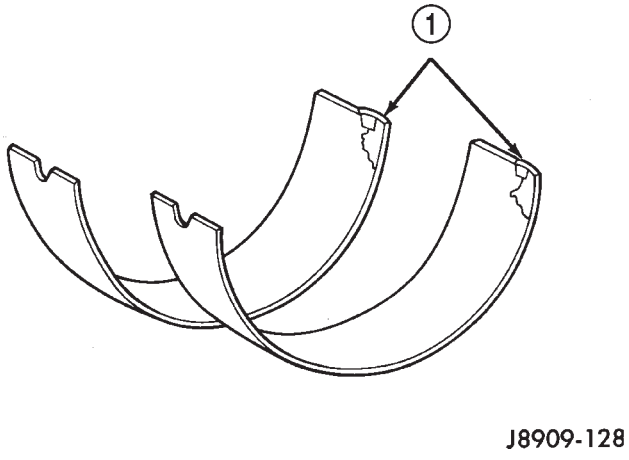

Fig. 36 Locking Tab Inspection

1 - ABNORMAL CONTACT AREA CAUSED BY LOCKING TABS NOT FULLY SEATED OR BEING BENT

CONNECTING ROD BEARINGS (Continued)

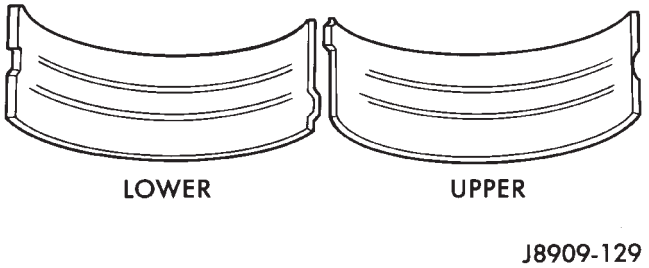

Fig. 37 Scoring Caused by Insufficient Lubrication or Damaged Crankshaft Journal

Misaligned or bent connecting rods can cause abnormal wear on pistons, piston rings, cylinder walls, connecting rod bearings and crankshaft connecting rod journals. If wear patterns or damage to any of these components indicate the probability of a misaligned connecting rod, inspect it for correct rod alignment. Replace misaligned, bent or twisted connecting rods.

BEARING-TO-JOURNAL CLEARANCE

(1) Wipe the oil from the connecting rod journal.

(2) Use short rubber hose sections over rod bolts during installation.

(3) Lubricate the upper bearing insert and install in connecting rod.

(4) Use piston ring compressor to install the rod and piston assemblies. The oil squirt holes in the rods must face the camshaft. The arrow on the piston crown should point to the front of the engine (Fig. 38). Verify that the oil squirt holes in the rods face the camshaft and that the arrows on the pistons face the front of the engine.

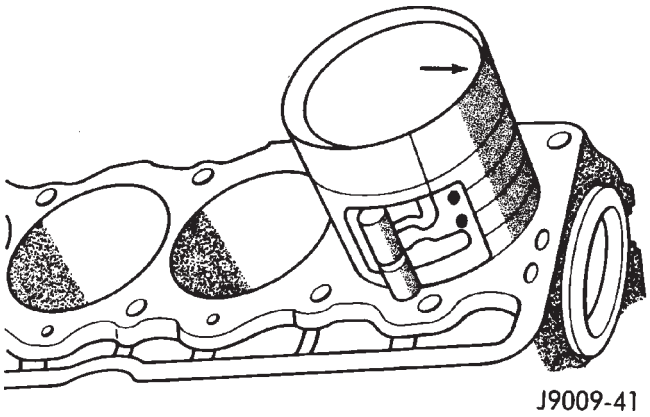

Fig. 38 Rod and Piston Assembly Installation

(5) Install the lower bearing insert in the bearing cap. The lower insert must be dry. Place strip of Plastigage across full width of the lower insert at the center of bearing cap. Plastigage must not crumble in use. If brittle, obtain fresh stock.

(6) Install bearing cap and connecting rod on the journal and tighten nuts to 45 N·m (33 ft. lbs.) torque. DO NOT rotate crankshaft. Plastigage will smear, resulting in inaccurate indication.

(7) Remove the bearing cap and determine amount of bearing-to- journal clearance by measuring the width of compressed Plastigage (Fig. 39). **Plastigage should indicate the same clearance across the entire width of the insert. If the clearance varies, it may be caused by either a tapered journal, bent connecting rod or foreign material trapped between the insert and cap or rod.**

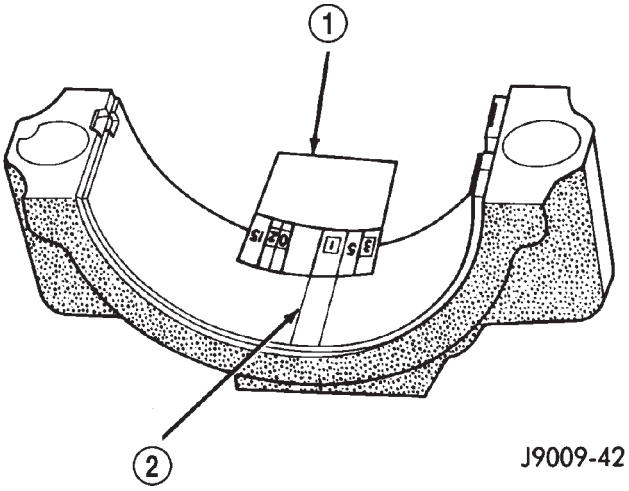

Fig. 39 Measuring Bearing Clearance with Plastigage

1 - PLASTIGAGE SCALE
2 - COMPRESSED PLASTIGAGE

(8) If the correct clearance is indicated, replacement of the bearing inserts is not necessary. Remove the Plastigage from crankshaft journal and bearing insert. Proceed with installation.

(9) If bearing-to-journal clearance exceeds the specification, install a pair of 0.0254 mm (0.001 inch) undersize bearing inserts. All the odd size inserts must be on the bottom. The sizes of the service replacement bearing inserts are stamped on the backs of the inserts. Measure the clearance as described in the previous steps.

(10) The clearance is measured with a pair of 0.0254 mm (0.001 inch) undersize bearing inserts installed. This will determine if two 0.0254 mm (0.001 inch) undersize inserts or another combination is needed to provide the correct clearance. Refer to CONNECTING ROD BEARING FITTING CHART .

CONNECTING ROD BEARINGS (Continued)

CONNECTING ROD BEARING FITTING CHART

CRANKSHAFT JOURNAL		CORRESPONDING ROD BEARING INSERT	
Color Code	**Diameter**	**Upper Insert Size**	**Lower Insert Size**
Yellow	53.2257 - 53.2079 mm (2.0955 - 2.0948 in.)	Yellow - Standard	Yellow - Standard
Orange	53.2079 - 53.1901 mm (2.0948 - 2.0941 in.) 0.0178 mm (0.0007 in.) Undersize	Yellow - Standard	Blue - Undersize 0.025 mm (0.001 in.)
Blue	53.1901 - 53.1724 mm (2.0941 - 2.0934 in.) 0.0356 mm (0.0014 in.) Undersize	Blue - Undersize 0.025 mm (0.001 in.)	Blue - Undersize 0.025 mm (0.001 in.)
Red	52.9717 - 52.9539 mm (2.0855 - 2.0848 in.) 0.254 mm (0.010 in.) Undersize	Red - Undersize 0.254 mm (0.010 in.)	Red - Undersize 0.254 mm (0.010 in.)

(11) **FOR EXAMPLE:** If the initial clearance was 0.0762 mm (0.003 inch), 0.025 mm (0.001 inch) undersize inserts would reduce the clearance by 0.025 mm (0.001 inch). The clearance would be 0.002 inch and within specification. A 0.051 mm (0.002 inch) undersize insert would reduce the initial clearance an additional 0.013 mm (0.0005 inch). The clearance would then be 0.038 mm (0.0015 inch).

(12) Repeat the Plastigage measurement to verify your bearing selection prior to final assembly.

(13) Once you have selected the proper insert, install the insert and cap. Tighten the connecting rod bolts to 45 N·m (33 ft. lbs.) torque.

SIDE CLEARANCE MEASUREMENT

Slide snug-fitting feeler gauge between the connecting rod and crankshaft journal flange (Fig. 40). (Refer to 9 - ENGINE - SPECIFICATIONS). Replace the connecting rod if the side clearance is not within specification.

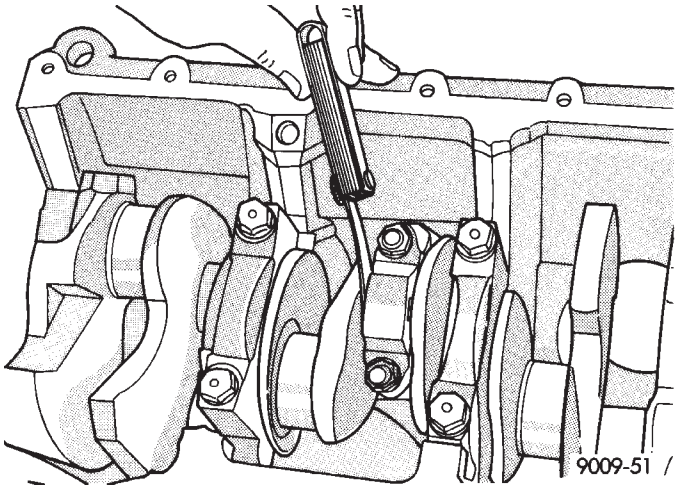

Fig. 40 Checking Connecting Rod Side Clearance - Typical

CRANKSHAFT

DESCRIPTION

The crankshaft is constructed of nodular cast iron. The crankshaft is a crosshaped four throw design with eight counterweights for balancing purposes. The crankshaft is supported by seven select main bearings with the number three serving as the thrust washer location. The main journals of the crankshaft are cross drilled to improve rod bearing lubrication. The select fit main bearing markings are located on the crankshaft counter weights. The crankshaft rear oil seal is a two piece design. The front oil seal is a one piece design retained in the timing chain cover (Fig. 41).

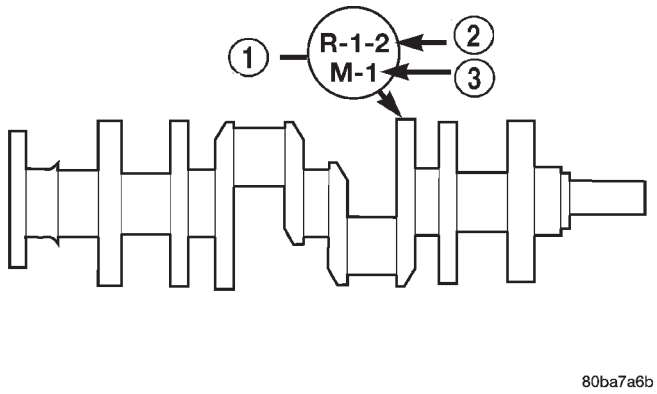

Fig. 41 Crankshaft with Select Fit Marking Location

1 - 1/4" LETTERS
2 - (ROD)
3 - (MAIN)

CRANKSHAFT MAIN BEARINGS

STANDARD PROCEDURE - FITTING CRANKSHAFT MAIN BEARINGS

FITTING BEARINGS (CRANKSHAFT INSTALLED)

The main bearing caps, numbered (front to rear) from 1 through 7 have an arrow to indicate the forward position. The upper main bearing inserts are grooved to provide oil channels while the lower inserts are smooth.

Each bearing insert pair is selectively fitted to its respective journal to obtain the specified operating clearance. In production, the select fit is obtained by using various-sized color-coded bearing insert pairs as listed in the Main Bearing Fitting Chart. The bearing color code appears on the edge of the insert. **The size is not stamped on bearing inserts used for engine production.**

The main bearing journal size (diameter) is identified by a color-coded paint mark (Fig. 42)on the adjacent cheek or counterweight towards the rear of the crankshaft (flange end). The rear main journal, is identified by a color-coded paint mark on the crankshaft rear flange.

When required, upper and lower bearing inserts of different sizes may be used as a pair. A standard size insert is sometimes used in combination with a 0.025 mm (0.001 inch) undersize insert to reduce the clearance by 0.013 mm (0.0005 inch). **Never use a pair of bearing inserts with greater than a 0.025 mm (0.001 inch) difference in size. Refer to the Bearing Insert Pair Chart.**

NOTE: When replacing inserts, the odd size inserts must be either all on the top (in cylinder block) or all on the bottom (in main bearing cap).

Once the bearings have been properly fitted, proceed to .

BEARING-TO-JOURNAL CLEARANCE (CRANKSHAFT INSTALLED)

When using Plastigage, check only one bearing clearance at a time.

Install the grooved main bearings into the cylinder block and the non-grooved bearings into the bearing caps.

Install the crankshaft into the upper bearings dry.

Place a strip of Plastigage across full width of the crankshaft journal to be checked.

Install the bearing cap and tighten the bolts to 108 N·m (80 ft. lbs.) torque.

NOTE: DO NOT rotate the crankshaft. This will cause the Plastigage to shift, resulting in an inaccurate reading. Plastigage must not be permitted to crumble. If brittle, obtain fresh stock.

Remove the bearing cap. Determine the amount of clearance by measuring the width of the compressed Plastigage with the scale on the Plastigage envelope (Fig. 43). (Refer to 9 - ENGINE - SPECIFICATIONS) for the proper clearance.

Plastigage should indicate the same clearance across the entire width of the insert. If clearance varies, it may indicate a tapered journal or foreign material trapped behind the insert.

If the specified clearance is indicated and there are no abnormal wear patterns, replacement of the bearing inserts is not necessary. Remove the Plastigage from the crankshaft journal and bearing insert. Proceed to (Refer to 9 - ENGINE/ENGINE BLOCK/ CRANKSHAFT MAIN BEARINGS - INSTALLATION).

CRANKSHAFT MAIN BEARINGS (Continued)

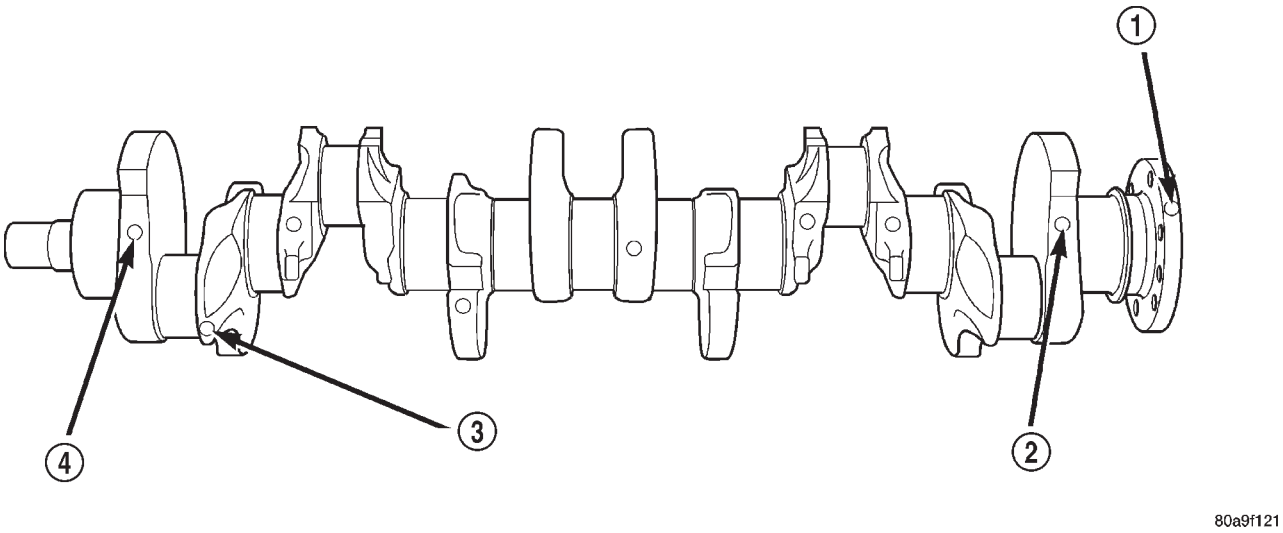

Fig. 42 Crankshaft Journal Size Paint I.D. Location

1 - NO. 7 MAIN JOURNAL SIZE PAINT MARK
2 - NO. 6 CONNECTING ROD JOURNAL SIZE PAINT MARK
3 - NO. 1 CONNECTING ROD JOURNAL SIZE PAINT MARK
4 - NO. 1 MAIN JOURNAL SIZE PAINT MARK

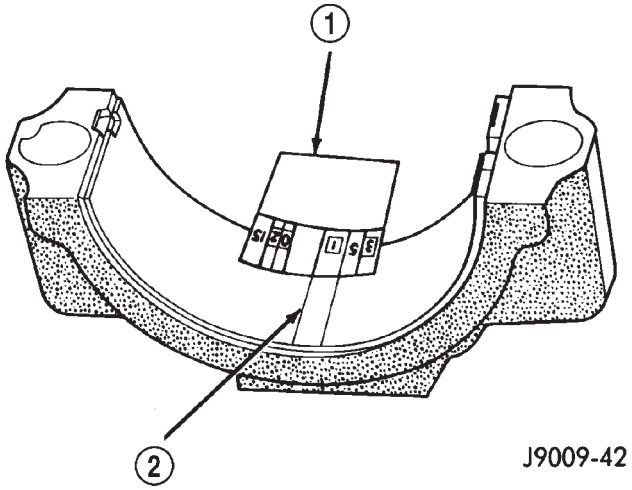

Fig. 43 Measuring Bearing Clearance with Plastigage

1 - PLASTIGAGE SCALE
2 - COMPRESSED PLASTIGAGE

If the clearance exceeds specification, install a pair of 0.025 mm (0.001 inch) undersize bearing inserts and measure the clearance as described in the previous steps.

The clearance indicate with the 0.025 mm (0.001 inch) undersize insert pair installed will determine if this insert size or some other combination will provide the specified clearance. **FOR EXAMPLE:** If the clearance was 0.0762 mm (0.003 inch) originally, a pair of 0.0254 mm (0.001 inch) undersize inserts would reduce the clearance by 0.0254 mm (0.001 inch). The clearance would then be 0.0508 mm (0.002 inch) and within the specification. A 0.051 mm (0.002 inch) undersize bearing insert and a 0.0254 mm (0.001 inch) undersize insert would reduce the original clearance an additional 0.0127 mm (0.0005 inch). The clearance would then be 0.0381 mm (0.0015 inch).

CAUTION: Never use a pair of inserts that differ more than one bearing size as a pair.

FOR EXAMPLE: DO NOT use a standard size upper insert and a 0.051 mm (0.002 inch) undersize lower insert.

If the clearance exceeds specification using a pair of 0.051 mm (0.002 inch) undersize bearing inserts, measure crankshaft journal diameter with a micrometer. If the journal diameter is correct, the crankshaft bore in the cylinder block may be misaligned, which requires cylinder block replacement or machining to true bore.

Replace the crankshaft or grind to accept the appropriate undersize bearing inserts if:

- Journal diameters 1 through 6 are less than 63.4517 mm (2.4981 inches)
- Journal 7 diameter is less than 63.4365 mm (2.4975 inches).

Once the proper clearances have been obtained, proceed to (Refer to 9 - ENGINE/ENGINE BLOCK/ CRANKSHAFT MAIN BEARINGS - INSTALLATION).

CRANKSHAFT MAIN BEARINGS (Continued)

JOURNAL DIAMETER (CRANKSHAFT REMOVED)

Remove the crankshaft from the cylinder block.

Clean the oil off the main bearing journal.

Determine the maximum diameter of the journal with a micrometer. Measure at two locations 90° apart at each end of the journal.

The maximum allowable taper and out of round is 0.013 mm (0.0005 inch). Compare the measured diameter with the journal diameter specification MAIN BEARING FITTING CHART . Select inserts required to obtain the specified bearing-to-journal clearance.

Install the crankshaft into the cylinder block.

MAIN BEARING FITTING CHART

Crankshaft Journals #1-6		Corresponding Crankshaft Bearing Insert	
Color Code	**Diameter**	**Upper Insert Size**	**Lower Insert Size**
Yellow	63.5025 -63.4898 mm (2.5001 - 2.4996 in.)	Yellow - Standard	Yellow - Standard
Orange	63.4898 - 63.4771 mm (2.4996 - 2.4991 in.) 0.0127 mm (0.0005 in.) Undersize	Yellow - Standard	Blue - Undersize 0.025 mm (0.001 in.)
Blue	63.4771 - 63.4644 mm (2.4991 - 2.4986 in.) 0.0254 mm (0.001 in.) Undersize	Blue - Undersize 0.025 mm (0.001 in.)	Blue - Undersize 0.025 mm (0.001 in.)
Green	63.4644 - 63.4517 mm (2.4986 - 2.4981 in.) 0.0381 mm (0.0015 in.) Undersize	Blue - Undersize 0.025 mm (0.001 in.)	Green - Undersize 0.051 mm (0.002 in.)
Red	63.2485 - 63.2358 mm (2.4901 - 2.4896 in.) 0.254 mm (0.010 in.) Undersize	Red - Undersize 0.254 mm (0.010 in.)	Red - Undersize 0.254 mm (0.010 in.)

Crankshaft Journal #7 Only		Corresponding Bearing Insert	
Color Code	**Diameter**	**Upper Insert Size**	**Lower Insert Size**
Yellow	63.4873 - 63.4746 mm (2.4995 - 2.4990 in.)	Yellow - Standard	Yellow - Standard
Orange	63.4746 - 63.4619 mm (2.4990 - 2.4985 in.) 0.0127 mm (0.0005 in.) Undersize	Yellow - Standard	Blue - Undersize 0.025 mm (0.001 in.)
Blue	63.4619 - 63.4492 mm (2.4985 - 2.4980 in.) 0.0254 mm (0.001 in.) Undersize	Blue - Undersize 0.025 mm (0.001 in.)	Blue - Undersize 0.025 mm (0.001 in.)

CRANKSHAFT MAIN BEARINGS (Continued)

Crankshaft Journal #7 Only		Corresponding Bearing Insert	
Color Code	Diameter	Upper Insert Size	Lower Insert Size
Green	63.4492 - 63.4365 mm (2.4980 - 2.4975 in.) 0.0381 mm (0.0015 in.) Undersize	Blue - Undersize 0.025 mm (0.001 in.)	Green - Undersize 0.051 mm (0.002 in.)
Red	63.2333 - 63.2206 mm (2.4895 - 2.4890 in.) 0.254 mm (0.010 in.) Undersize	Red - Undersize 0.254 mm (0.010 in.)	Red - Undersize 0.254 mm (0.010 in.)

REMOVAL

(1) Disconnect negative cable from battery.

(2) Remove the spark plugs (Refer to 8 - ELECTRICAL/IGNITION CONTROL/SPARK PLUG - REMOVAL).

(3) Raise the vehicle.

(4) Remove the oil pan (Refer to 9 - ENGINE/LUBRICATION/OIL PAN - REMOVAL) and oil pump (Refer to 9 - ENGINE/LUBRICATION/OIL PUMP - REMOVAL).

(5) Remove main bearing cap brace (Fig. 44).

(6) Remove only one main bearing cap and lower insert at a time (Fig. 45).

(7) Remove the lower insert from the bearing cap.

(8) Remove the upper insert by LOOSENING (DO NOT REMOVE) all of the other bearing caps. Now insert a small cotter pin tool in the crankshaft journal oil hole. Bend the cotter pin as illustrated to fabricate the tool (Fig. 46). With the cotter pin tool in place, rotate the crankshaft so that the upper bearing insert will rotate in the direction of its locking tab. Because there is no hole in the No.3 main journal, use a tongue depressor or similar soft-faced tool to remove the bearing insert (Fig. 46). After moving the insert approximately 25 mm (1 inch), it can be removed by applying pressure under the tab.

(9) Using the same procedure described above, remove the remaining bearing inserts one at a time for inspection.

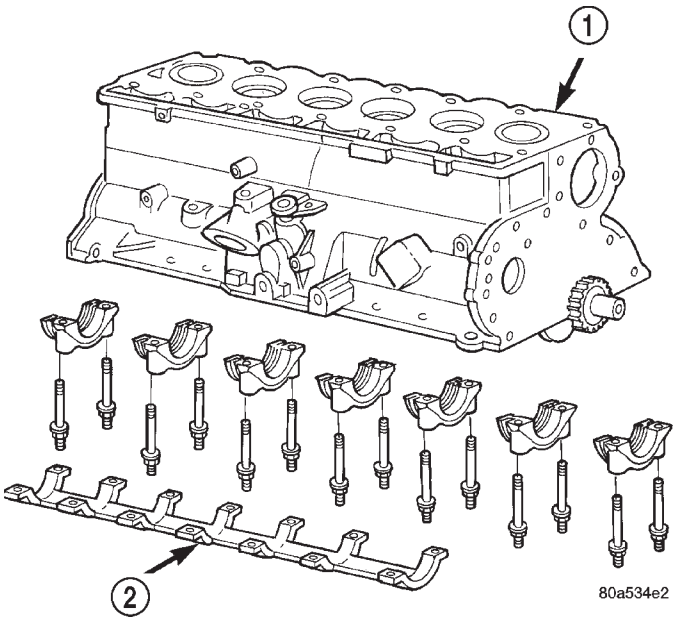

Fig. 44 Main Bearing Caps and Brace.

1 - BLOCK
2 - MAIN BEARING CAP BRACE

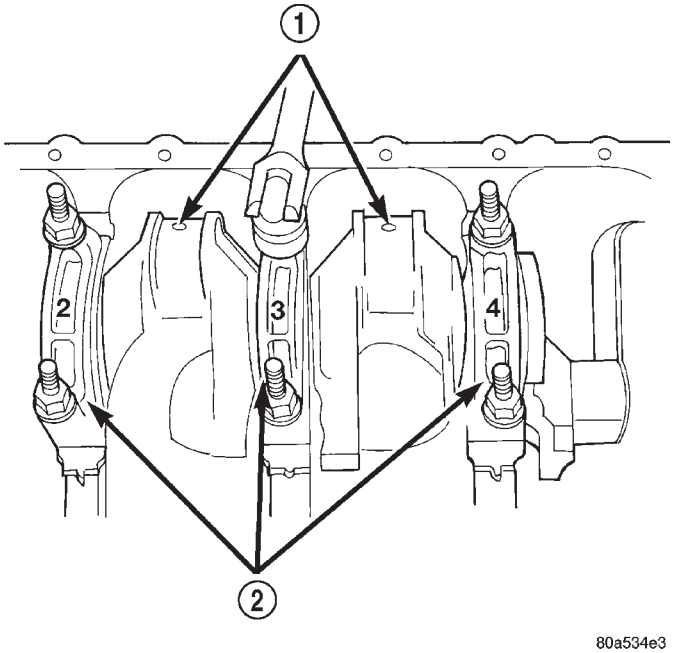

Fig. 45 Removing Main Bearing Caps and Lower Inserts

1 - CONNECTING ROD JOURNAL
2 - MAIN BEARING CAPS

INSPECTION

Wipe the inserts clean and inspect for abnormal wear patterns and for metal or other foreign material imbedded in the lining. Normal main bearing insert

CRANKSHAFT MAIN BEARINGS (Continued)

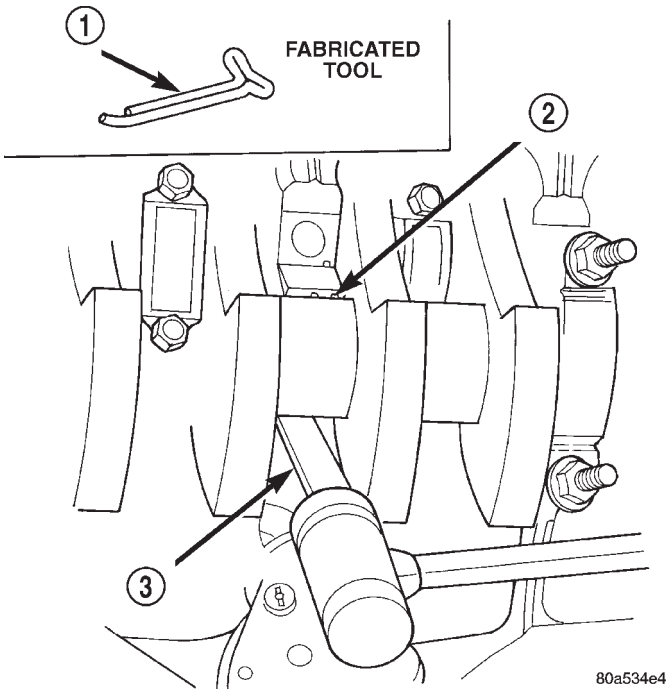

Fig. 46 Removing Upper Inserts

1 - COTTER PIN
2 - BEARING INSERT
3 - TONGUE DEPRESSOR

wear patterns are illustrated (Fig. 47). In general the lower bearing half will have a heaver wear pattern.

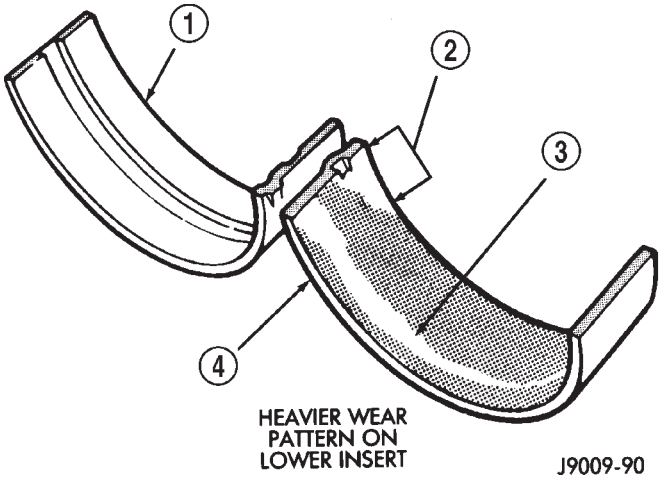

Fig. 47 Main Bearing Wear Patterns

1 - UPPER INSERT
2 - NO WEAR IN THIS AREA
3 - LOW AREA IN BEARING LINING
4 - LOWER INSERT

NOTE: If any of the crankshaft journals are scored, remove the engine for crankshaft repair.

Inspect the back of the inserts for fractures, scrapings or irregular wear patterns.

Inspect the upper insert locking tabs for damage.

Replace all damaged or worn bearing inserts.

INSTALLATION

(1) Lubricate the bearing surface of each insert with engine oil.

(2) Loosen all the main bearing caps. Install the main bearing upper inserts.

(3) Install the lower bearing inserts into the main bearing caps.

(4) On the rear main cap, apply Mopar® Gasket Maker sealer on both sides of cylinder block as shown in (Fig. 48). The dab of sealer should be 3 mm (0.125 in.) in diameter.

(5) Apply Mopar® Gasket Maker on the rear bearing cap. The bead should be 2.3 mm (0.09 in.) in diameter. DO NOT apply sealer to the lip of the seal.

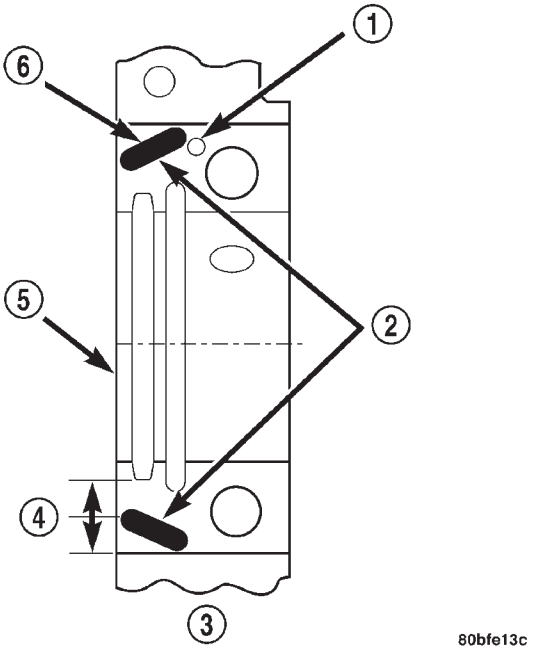

Fig. 48 Location of Sealer

1 - **DOWEL**
2 - **SEALER LOCATIONS**
3 - **CYLINDER BLOCK**
4 - **HALFWAY BETWEEN**
5 - **REAR FACE OF CYLINDER BLOCK**
6 - **3mm (0.125 in.)**

(6) Install the main bearing cap(s) and lower insert(s).

(7) Tighten the bolts of caps 1, 2, 4, 5, 6, and 7 to 54 N·m (40 ft. lbs.) torque. Now tighten these bolts to 95 N·m (70 ft. lbs.) torque. Finally, tighten these bolts to 108 N·m (80 ft. lbs.) torque.

CRANKSHAFT MAIN BEARINGS (Continued)

(8) Push the crankshaft forward and backward. Load the crankshaft front or rear and tighten cap bolt No.3 to 54 N·m (40 ft. lbs.) torque. Then tighten to 95 N·m (70 ft. lbs.) torque and finally tighten to 108 N·m (80 ft. lbs.) torque.

(9) Rotate the crankshaft after tightening each main bearing cap to ensure the crankshaft rotates freely.

(10) Check crankshaft end play. Crankshaft end play is controlled by the thrust bearing which is flange and installed at the No.2 main bearing position.

(a) Attach a magnetic base dial indicator to the cylinder block at either the front or rear of the engine.

(b) Position the dial indicator rod so that it is parallel to the center line of the crankshaft.

(c) Pry the crankshaft forward, position the dial indicator to zero.

(d) Pry the crankshaft forward and backward. Note the dial indicator readings. End play is the difference between the high and low measurements (Fig. 49). Correct end play is 0.038-0.165 mm (0.0015-0.0065 inch). The desired specifications are 0.051-0.064 mm (0.002-0.0025 inch).

(e) If end play is not within specification, inspect crankshaft thrust faces for wear. If no wear is apparent, replace the thrust bearing and measure end play. If end play is still not within specification, replace the crankshaft.

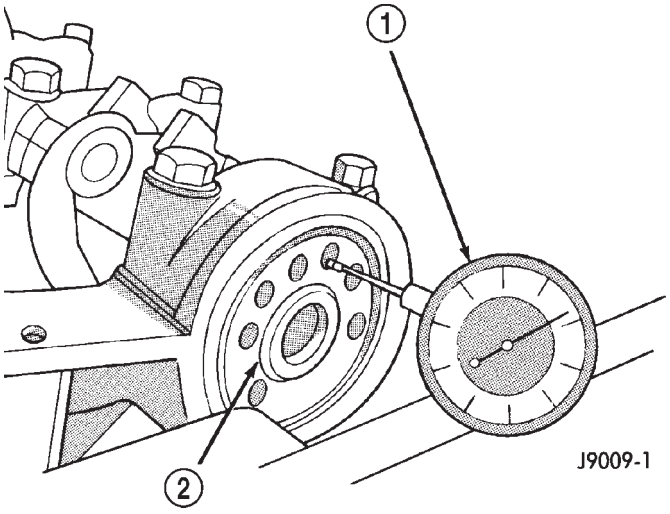

Fig. 49 Crankshaft End Play Measurement

1 - DIAL INDICATOR
2 - CRANKSHAFT

(11) If the crankshaft was removed, install the crankshaft into the cylinder block.

(12) Install main bearing cap brace tighten nuts to 47 N·m (35 ft. lbs.) torque.

(13) Install oil pump assy. and tighten attaching bolts to 23 N·m (17 ft. lbs.)

(14) Install the oil pan (Refer to 9 - ENGINE/LUBRICATION/OIL PAN - INSTALLATION).

(15) Install the drain plug. Tighten the plug to 34 N·m (25 ft. lbs.) torque.

(16) Lower the vehicle.

(17) Install the spark plugs. Tighten the plugs to 37 N·m (27 ft. lbs.) torque.

(18) Fill the oil pan with engine oil to the full mark on the dipstick level.

(19) Connect negative cable to battery.

CRANKSHAFT OIL SEAL - FRONT

REMOVAL

This procedure is done with the timing case cover installed.

(1) Disconnect negative cable from battery.

(2) Remove the serpentine drive belt (Refer to 7 - COOLING/ACCESSORY DRIVE/DRIVE BELTS - REMOVAL).

(3) Remove the vibration damper (Refer to 9 - ENGINE/ENGINE BLOCK/VIBRATION DAMPER - REMOVAL).

(4) Remove the radiator shroud.

(5) Carefully remove the oil seal. Make sure seal bore is clean.

INSTALLATION

This procedure is done with the timing case cover installed.

(1) Position the replacement oil seal on Timing Case Cover Alignment and Seal Installation Tool 6139 with seal open end facing inward. Apply a light film of Perfect Seal, or equivalent, on the outside diameter of the seal. Lightly coat the crankshaft with engine oil.

(2) Position the tool and seal over the end of the crankshaft and insert a draw screw tool into Seal Installation Tool 6139 (Fig. 50). Tighten the nut against the tool until it contacts the cover.

(3) Remove the tools. Apply a light film of engine oil on the vibration damper hub contact surface of the seal.

(4) Apply Mopar® Silicone Rubber Adhesive Sealant to the keyway in the crankshaft and insert the key. With the key inserted in the keyway in the crankshaft, install the vibration damper (Refer to 9 - ENGINE/ENGINE BLOCK/VIBRATION DAMPER - INSTALLATION).

(5) Install the serpentine belt (Refer to 7 - COOLING/ACCESSORY DRIVE/DRIVE BELTS - INSTALLATION).

CRANKSHAFT OIL SEAL - FRONT (Continued)

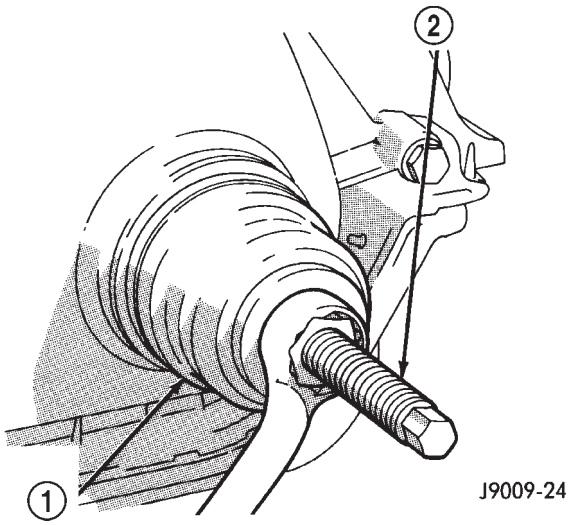

Fig. 50 Timing Case Cover Oil Seal Installation

1 - SEAL INSTALLATION TOOL
2 - DRAW SCREW TOOL

(6) Install the radiator shroud.
(7) Connect negative cable to battery.

CRANKSHAFT OIL SEAL - REAR

REMOVAL

The crankshaft rear main bearing oil seal consists of two half pieces of viton with a single lip that effectively seals the rear of the crankshaft. Replace the upper and lower seal halves as a unit to ensure leak-free operation.

(1) Remove transmission inspection cover.
(2) Remove oil pan. (Refer to 9 - ENGINE/LUBRICATION/OIL PAN - REMOVAL)
(3) Remove main bearing cap brace.
(4) Remove rear main bearing cap (No.7).
(5) Push upper seal out of the groove. Ensure that the crankshaft and seal groove are not damaged.
(6) Remove lower half of the seal from the bearing cap.

INSTALLATION

The crankshaft rear main bearing oil seal consists of two half pieces of viton with a single lip that effectively seals the rear of the crankshaft. Replace the upper and lower seal halves as a unit to ensure leak-free operation.

(1) Wipe the seal surface area of the crankshaft until it is clean.
(2) Apply a thin coat of engine oil.
(3) Coat lip of the seal with engine oil.
(4) Carefully position the upper seal into the groove in the cylinder block. The lip of the seal faces toward the front of the engine.
(5) Apply Mopar® Gasket Maker sealer on both sides of cylinder block as shown in (Fig. 51). The dab of sealer should be 3 mm (0.125 in.) in diameter.
(6) Apply Mopar® Gasket Maker on the rear bearing cap (Fig. 51). The bead should be 2.3 mm (0.09 in.) in diameter. DO NOT apply sealer to the lip of the seal.
(7) Position the lower seal into the bearing cap recess and seat it firmly. Be sure the seal is flush with the cylinder block pan rail.
(8) Coat the outer curved surface of the lower seal with soap and the lip of the seal with engine oil.

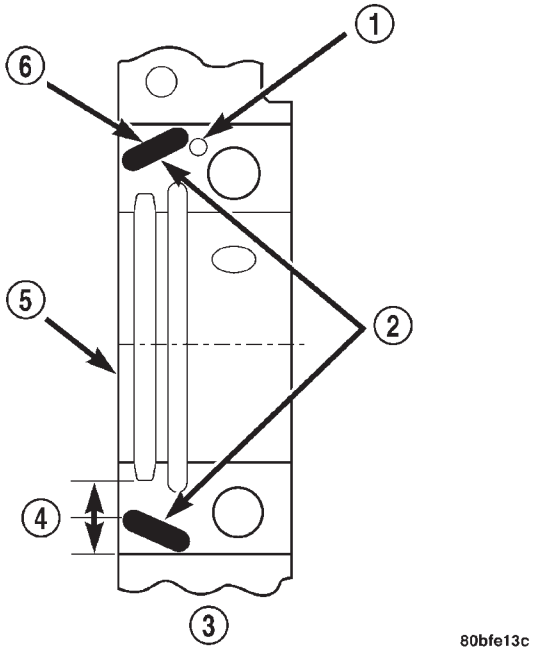

Fig. 51 Location of Sealer

1 - **DOWEL**
2 - **SEALER LOCATIONS**
3 - **CYLINDER BLOCK**
4 - **HALFWAY BETWEEN**
5 - **REAR FACE OF CYLINDER BLOCK**
6 - **3mm (0.125 in.)**

(9) Install the rear main bearing cap. DO NOT strike the cap more than twice for proper engagement.
(10) Tighten all main bearing bolts to 108 N·m (80 ft. lbs.) torque.
(11) Install the main bearing cap brace. Tighten nuts to 47 N·m (35 ft. lbs.).
(12) Install the oil pan gasket and oil pan (Refer to 9 - ENGINE/LUBRICATION/OIL PAN - INSTALLATION).

CRANKSHAFT OIL SEAL - REAR (Continued)

(13) Apply Mopar® Silicone Rubber Adhesive Sealant on cylinder block to rear main bearing cap corners and cylinder block to front cover joints (four places) (Fig. 52)

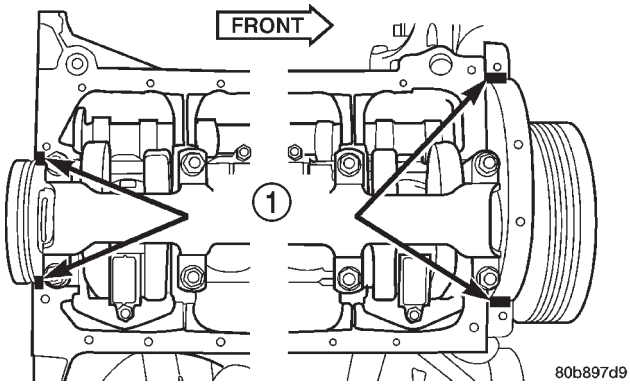

Fig. 52 Oil Pan

1 - SEALER LOCATIONS

(14) Install transmission inspection cover.

HYDRAULIC LIFTERS

DESCRIPTION

Valve lash is controlled by hydraulic tappets located inside the cylinder block, in tappet bores above the camshaft.

REMOVAL

NOTE: Retain all the components in the same order as removed.

(1) Remove the engine cylinder head(Refer to 9 - ENGINE/CYLINDER HEAD - REMOVAL) .

(2) Remove the push rods.

(3) Remove the tappets through the push rod openings in the cylinder block with a Hydraulic Valve Tappet Removal/Installation Tool (Fig. 53).

CLEANING

Clean each tappet assembly in cleaning solvent to remove all varnish, gum and sludge deposits.

INSPECTION

Inspect for indications of scuffing on the side and base of each tappet body.

Inspect each tappet base for concave wear with a straightedge positioned across the base. If the base is concave, the corresponding lobe on the camshaft is also worn. Replace the camshaft and tappets.

After cleaning and inspection, test each tappet for specified leak-down rate tolerance to ensure zero-lash operation (Fig. 54).

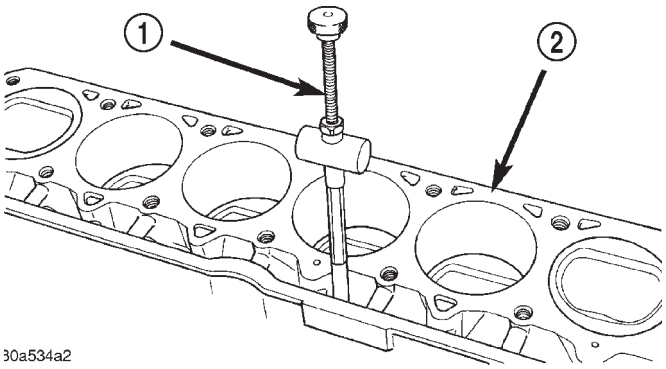

Fig. 53 HYDRAULIC VALVE TAPPET REMOVAL - 4.0L

1 - HYDRAULIC TAPPET REMOVAL TOOL
2 - CYLINDER BLOCK

Swing the weighted arm of the hydraulic valve tappet tester away from the ram of the Leak-Down Tester.

(1) Place a 7.925-7.950 mm (0.312-0.313 inch) diameter ball bearing on the plunger cap of the tappet.

(2) Lift the ram and position the tappet (with the ball bearing) inside the tester cup.

(3) Lower the ram, then adjust the nose of the ram until it contacts the ball bearing. DO NOT tighten the hex nut on the ram.

(4) Fill the tester cup with hydraulic valve tappet test oil until the tappet is completely submerged.

(5) Swing the weighted arm onto the push rod and pump the tappet plunger up and down to remove air. When the air bubbles cease, swing the weighted arm away and allow the plunger to rise to the normal position.

(6) Adjust the nose of the ram to align the pointer with the SET mark on the scale of the tester and tighten the hex nut.

(7) Slowly swing the weighted arm onto the push rod.

(8) Rotate the cup by turning the handle at the base of the tester clockwise one revolution every 2 seconds.

(9) Observe the leak-down time interval from the instant the pointer aligns with the START mark on the scale until the pointer aligns with the 0.125 mark. A normally functioning tappet will require 20-110 seconds to leak-down. Discard tappets with leak-down time interval not within this specification.

INSTALLATION

Retain all the components in the same order as removed.

It is not necessary to charge the tappets with engine oil. They will charge themselves within a very short period of engine operation.

HYDRAULIC LIFTERS (Continued)

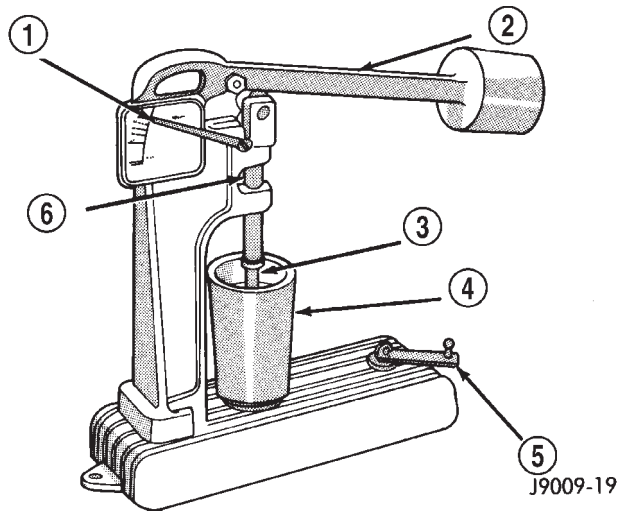

Fig. 54 Leak-Down Tester

1 - POINTER
2 - WEIGHTED ARM
3 - RAM
4 - CUP
5 - HANDLE
6 - PUSH ROD

(1) Dip each tappet in Mopar® Engine Oil Supplement, or equivalent.

(2) Use Hydraulic Valve Tappet Removal/Installation Tool to install each tappet in the same bore from where it was originally removed.

(3) Install the cylinder head (Refer to 9 - ENGINE/CYLINDER HEAD - INSTALLATION).

(4) Install the push rods in their original locations.

(5) Install the rocker arms and bridge and pivot assemblies at their original locations. Loosely install the capscrews at each bridge.

(6) Tighten the capscrews alternately, one turn at a time, to avoid damaging the bridges. Tighten the capscrews to 28 N·m (21 ft. lbs.) torque.

(7) Pour the remaining Mopar® Engine Oil Supplement, or equivalent over the entire valve actuating assembly. The Mopar® Engine Oil Supplement, or equivalent must remain with the engine oil for at least 1 609 km (1,000 miles). The oil supplement need not be drained until the next scheduled oil change.

(8) Install the cylinder head cover (Refer to 9 - ENGINE/CYLINDER HEAD/CYLINDER HEAD COVER(S) - INSTALLATION).

PISTON & CONNECTING ROD

DESCRIPTION

The pistons (Fig. 55) are made of a high strength aluminum alloy, the piston skirts are coated with a solid lubricant (Molykote) to reduce friction and provide scuff resistance. The connecting rods are made of cast iron.

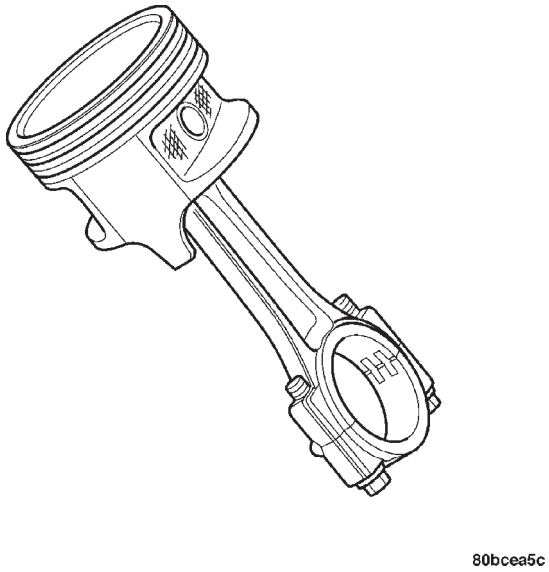

Fig. 55 Piston and Connecting Rod Assembly

STANDARD PROCEDURE - PISTON FITTING

(1) To correctly select the proper size piston, a cylinder bore gauge, capable of reading in 0.003 mm (.0001 in.) INCREMENTS is required. If a bore gauge is not available, do not use an inside micrometer.

(2) Measure the inside diameter of the cylinder bore at a point 49.5 mm (1-15/16 inches) below top of bore. Start perpendicular (across or at 90 degrees) to the axis of the crankshaft at point A and then take an additional bore reading 90 degrees to that at point B (Fig. 57).

(3) The coated pistons will be serviced with the piston pin and connecting rod pre-assembled. **The coated piston connecting rod assembly can be used to service previous built engines and MUST be replaced as complete sets.** Tin coated pistons should not be used as replacements for coated pistons.

(4) The coating material is applied to the piston after the final piston machining process. Measuring the outside diameter of a coated piston will not provide accurate results (Fig. 56). Therefore measuring the inside diameter of the cylinder bore with a dial Bore Gauge is **MANDATORY**. To correctly select the proper size piston, a cylinder bore gauge capable of reading in 0.003 mm (.0001 in.) increments is required.

(5) Piston installation into the cylinder bore requires slightly more pressure than that required for non-coated pistons. The bonded coating on the piston will give the appearance of a line-to-line fit with the cylinder bore.

PISTON & CONNECTING ROD (Continued)

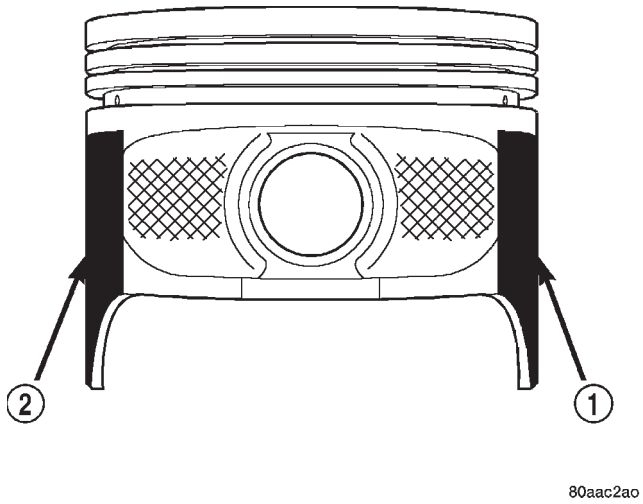

Fig. 56 Moly Coated Piston

1 - MOLY COATED
2 - MOLY COATED

PISTON SIZE CHART

CYLINDER BORE SIZE	PISTON LETTER SIZE
98.438 - 98.448 mm (3.8755 - 3.8759 in.)	A
98.448 - 98.458 mm (3.8759 - 3.8763 in.)	B
98.458 - 98.468 mm (3.8763 - 3.8767 in.)	C
98.468 - 98.478 mm (3.8767 - 3.8771 in.)	D
98.478 - 98.488 mm (3.8771 - 3.8775 in.)	E
98.488 - 98.498 mm (3.8775 - 3.8779 in.)	F

REMOVAL

(1) Remove the engine cylinder head cover. (Refer to 9 - ENGINE/CYLINDER HEAD/CYLINDER HEAD COVER(S) - REMOVAL).

(2) Remove the rocker arms, bridges and pivots.

(3) Remove the push rods.

(4) Remove the engine cylinder head. (Refer to 9 - ENGINE/CYLINDER HEAD - REMOVAL).

(5) Position the pistons one at a time near the bottom of the stroke. Use a ridge reamer to remove the ridge from the top end of the cylinder walls. Use a protective cloth to collect the cuttings.

(6) Raise the vehicle.

(7) Drain the engine oil.

(8) Remove the oil pan and gasket. (Refer to 9 - ENGINE/LUBRICATION/OIL PAN - REMOVAL).

(9) Remove main bearing cap brace (Fig. 58).

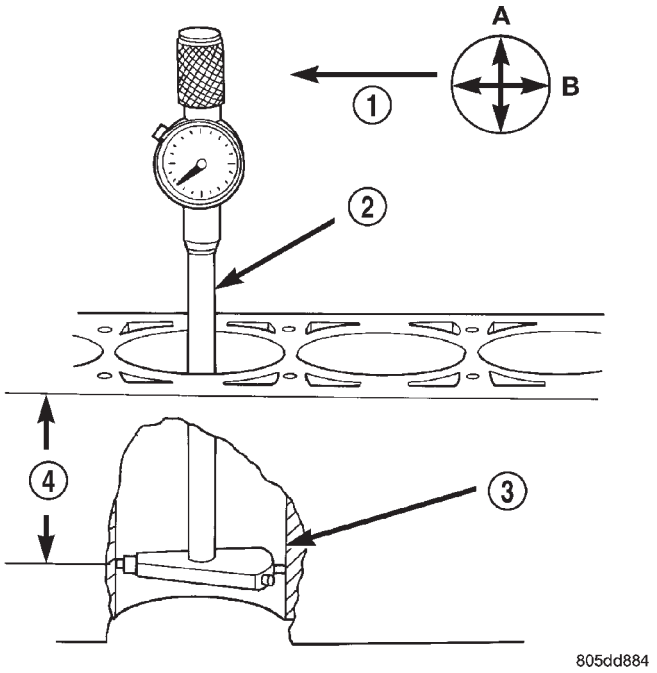

Fig. 57 Bore Gauge

1 - FRONT
2 - BORE GAUGE
3 - CYLINDER BORE
4 - 49.5 MM (1-15/16 in.)

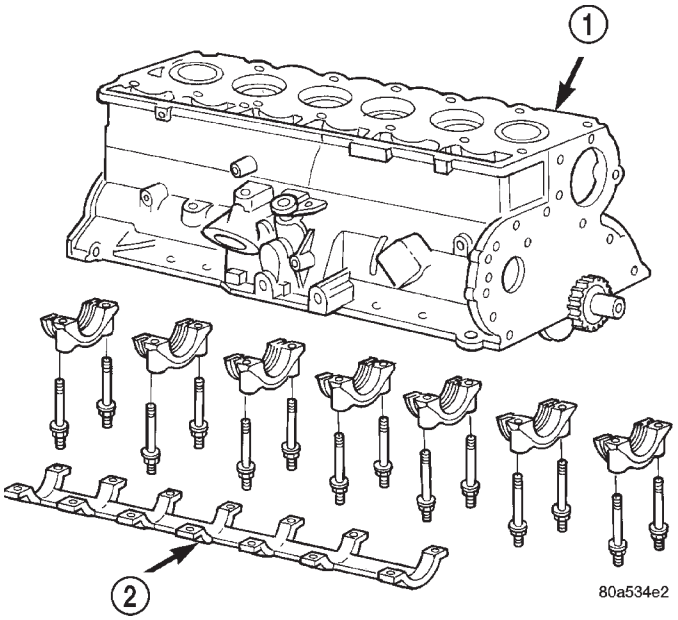

Fig. 58 Main Bearings Caps and Brace

1 - BLOCK
2 - MAIN BEARING CAP BRACE

(10) Remove the connecting rod bearing caps and inserts. Mark the caps and rods with the cylinder bore location. The connecting rods and caps are stamped with a two letter combination (Fig. 59).

PISTON & CONNECTING ROD (Continued)

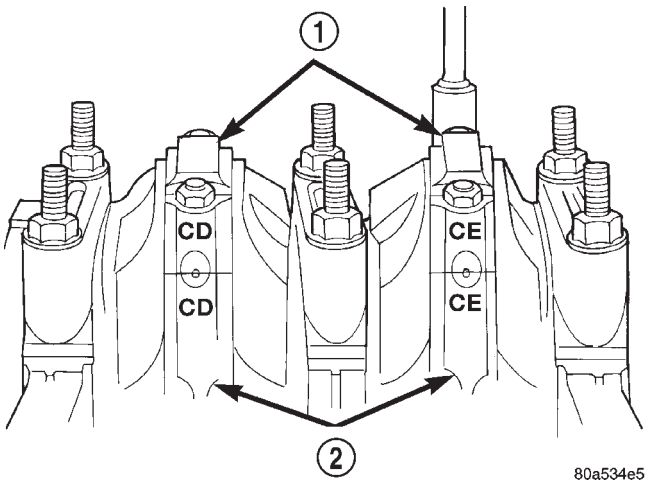

Fig. 59 Stamped Connecting Rods and Caps

1 - CONNECTING ROD CAP
2 - CONNECTING ROD

(11) Lower the vehicle until it is about 2 feet from the floor.

CAUTION: Ensure that the connecting rod bolts DO NOT scratch the crankshaft journals or cylinder walls. Short pieces of rubber hose, slipped over the rod bolts will provide protection during removal.

(12) Have an assistant push the piston and connecting rod assemblies up and through the top of the cylinder bores (Fig. 60).

INSTALLATION

(1) Clean the cylinder bores thoroughly. Apply a light film of clean engine oil to the bores with a clean lint-free cloth.

(2) Install the piston rings on the pistons if removed (Refer to 9 - ENGINE/ENGINE BLOCK/ PISTON RINGS - STANDARD PROCEDURE).

(3) Lubricate the piston and rings with clean engine oil.

CAUTION: Ensure that connecting rod bolts DO NOT scratch the crankshaft journals or cylinder walls. Short pieces of rubber hose slipped over the connecting rod bolts will provide protection during installation.

(4) Use a piston ring compressor to install the connecting rod and piston assemblies through the top of the cylinder bores (Fig. 61).

(5) Ensure the arrow on the piston top points to the front of the engine (Fig. 61).

(6) Raise the vehicle.

(7) Each bearing insert is fitted to its respective journal to obtain the specified clearance between the bearing and the journal. In production, the select fit

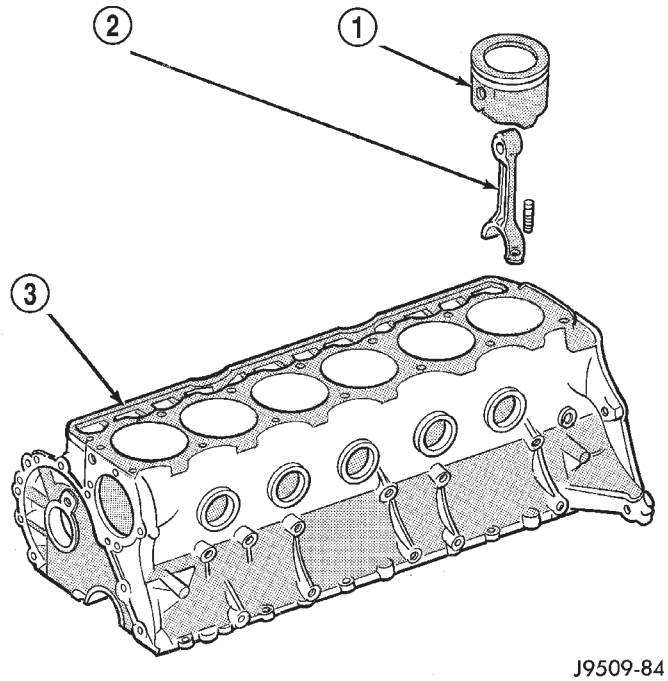

Fig. 60 Removal of Connecting Rod and Piston Assembly

1 - PISTON
2 - CONNECTING ROD
3 - BLOCK

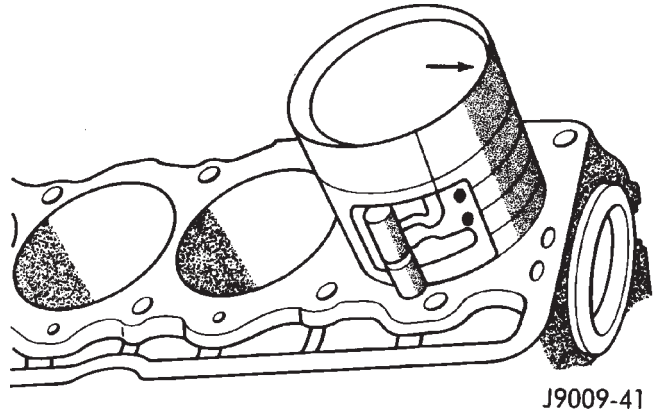

Fig. 61 Rod and Piston Assembly Installation

is obtained by using various-sized, color-coded bearing inserts as listed in the Connecting Rod Bearing Fitting Chart. The color code appears on the edge of the bearing insert. The size is not stamped on inserts used for production of engines.

(8) The rod journal is identified during the engine production by a color-coded paint mark on the adjacent cheek or counterweight toward the flange (rear) end of the crankshaft. The color codes used to indicate journal sizes are listed in the Connecting Rod Bearing Fitting Chart.

(9) When required, upper and lower bearing inserts of different sizes may be used as a pair (refer

PISTON & CONNECTING ROD (Continued)

to Connecting Rod Bearing Fitting Chart). A standard size insert is sometimes used in combination with a 0.025 mm (0.001 inch) undersize insert to reduce clearance 0.013 mm (0.0005 inch).

CAUTION: DO NOT intermix bearing caps. Each connecting rod and bearing cap are stamped with the cylinder number. The stamp is located on a machined surface adjacent to the oil squirt hole that faces the camshaft side of the cylinder block.

(10) Install the connecting rod bearing caps and inserts in the same positions as removed.

CAUTION: Verify that the oil squirt holes in the rods face the camshaft and that the arrows on the pistons face the front of the engine.

(11) Install main bearing cap brace (Fig. 58). Tighten nuts to 47 N·m (35 ft. lbs.).

(12) Install the oil pan and gasket (Refer to 9 - ENGINE/LUBRICATION/OIL PAN - INSTALLATION).

(13) Lower the vehicle.

(14) Install the engine cylinder head (Refer to 9 - ENGINE/CYLINDER HEAD - INSTALLATION), push rods, rocker arms, bridges, pivots and engine cylinder head cover(Refer to 9 - ENGINE/CYLINDER HEAD/CYLINDER HEAD COVER(S) - INSTALLATION).

(15) Fill the crankcase with engine oil.

PISTON RINGS

STANDARD PROCEDURE - PISTON RING FITTING

(1) Carefully clean the carbon from all ring grooves. Oil drain openings in the oil ring groove and pin boss must be clear. DO NOT remove metal from the grooves or lands. This will change ring-to-groove clearances and will damage the ring-to-land seating.

(2) Be sure the piston ring grooves are free of nicks and burrs.

(3) Measure the ring side clearance with a feeler gauge fitted snugly between the ring land and ring (Fig. 62) (Fig. 63). Rotate the ring in the groove. It must move freely around circumference of the groove.

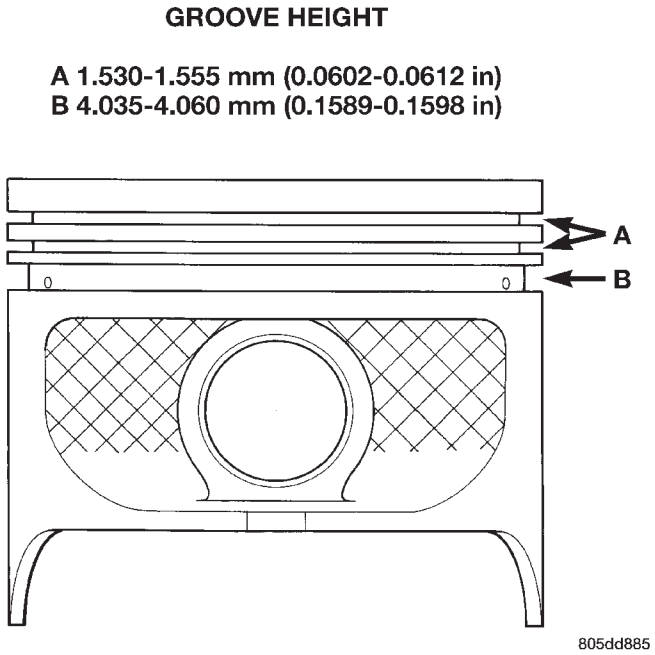

Fig. 62 Piston Dimensions

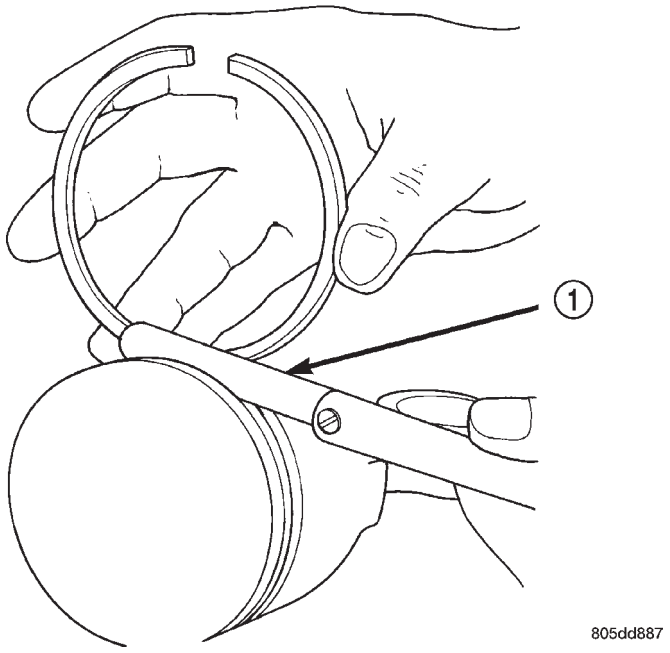

Fig. 63 Ring Side Clearance Measurement

1 - FEELER GAUGE

PISTON RINGS (Continued)

RING SIDE CLEARANCE CHART

ITEM	SPECIFICATION
Top Compression Ring	0.042 - 0.084 mm (0.0017 - 0.0033 in.)
Second Compression Ring	0.042 - 0.084 mm (0.0017 - 0.0033 in.)
Oil Control Ring	0.06 - 0.21 mm (0.0024 - 0.0083 in.)

(4) Place ring in the cylinder bore and push down with inverted piston to position near lower end of the ring travel. Measure ring gap with a feeler gauge fitting snugly between ring ends (Fig. 64).

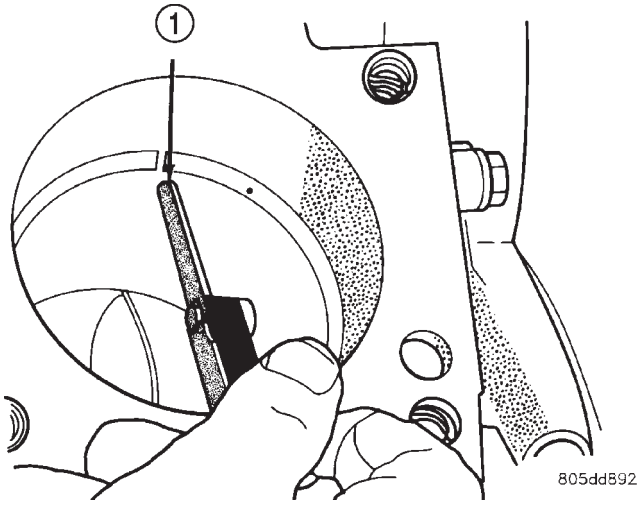

Fig. 64 Gap Measurement

1 - FEELER GAUGE

RING GAP MEASUREMENT CHART

ITEM	SPECIFICATION
Top Compression Ring	0.229 - 0.610 mm (0.0090 - 0.0240 in.)
Second Compression Ring	0.483 - 0.965 mm (0.0190 - 0.080 in.)
Oil Control Ring	0.254 - 1.500 mm (0.010 - 0.060 in.)

(5) The oil control rings are symmetrical, and can be installed with either side up. It is not necessary to use a tool to install the upper and lower rails. Insert oil rail spacer first, then side rails.

(6) The two compression rings are different and cannot be interchanged. The top compression ring can be identified by the shiny coating on the outer sealing surface and can be installed with either side up. (Fig. 65).

(7) The second compression ring has a slight chamfer on the bottom of the inside edge and a dot on the top for correct installation (Fig. 66) and (Fig. 67).

(8) Using a ring installer, install the second compression ring with the dot facing up (Fig. 66) (Fig. 68).

(9) Using a ring installer, install the top compression ring (either side up).

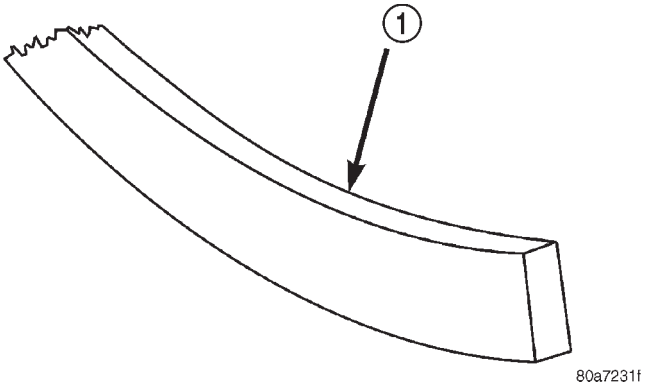

Fig. 65 Top Compression ring identification

1 - TOP COMPRESSION RING

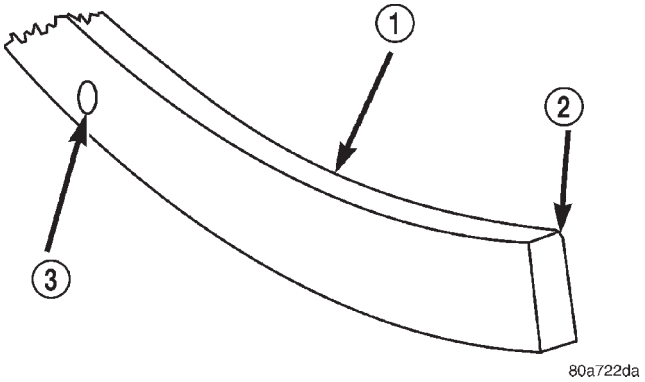

Fig. 66 Second Compression Ring Identification

1 - SECOND COMPRESSION RING
2 - CHAMFER
3 - ONE DOT

Ring Gap Orientation

- Position the gaps on the piston as shown (Fig. 69).
- Oil spacer - Gap on center line of piston skirt.
- Oil rails - gap 180° apart on centerline of piston pin bore.
- No. 2 Compression ring - Gap 180° from top oil rail gap.

PISTON RINGS (Continued)

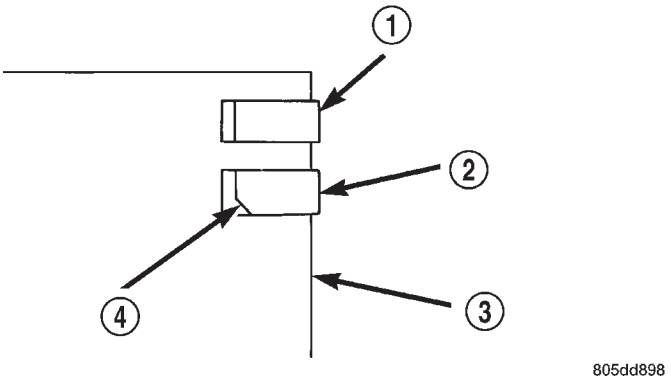

Fig. 67 Compression Ring Chamfer Location

1 - TOP COMPRESSION RING
2 - SECOND COMPRESSION RING
3 - PISTON
4 - CHAMFER

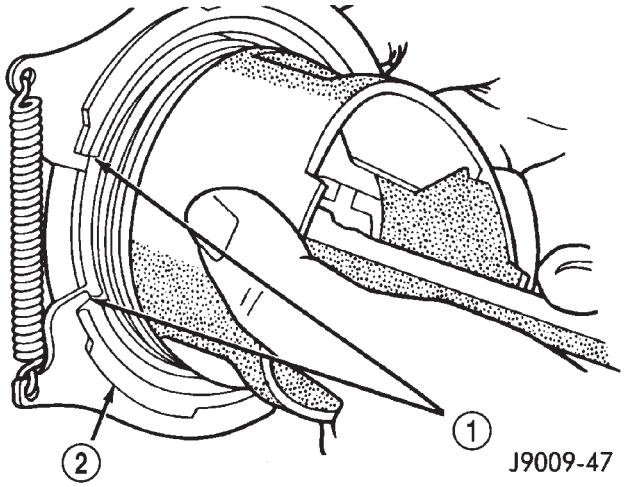

Fig. 68 Compression Ring Installation

1 - COMPRESSION RING
2 - RING EXPANDER RECOMMENDED

- No. 1 Compression ring - Gap 180° from No. 2 compression ring gap.

VIBRATION DAMPER

REMOVAL

(1) Disconnect negative cable from battery.

(2) Remove the serpentine drive belt (Refer to 7 - COOLING/ACCESSORY DRIVE/DRIVE BELTS - REMOVAL) and fan shroud.

(3) Remove the vibration damper retaining bolt and washer.

(4) Use Vibration Damper Removal Tool 7697 to remove the damper from the crankshaft (Fig. 70).

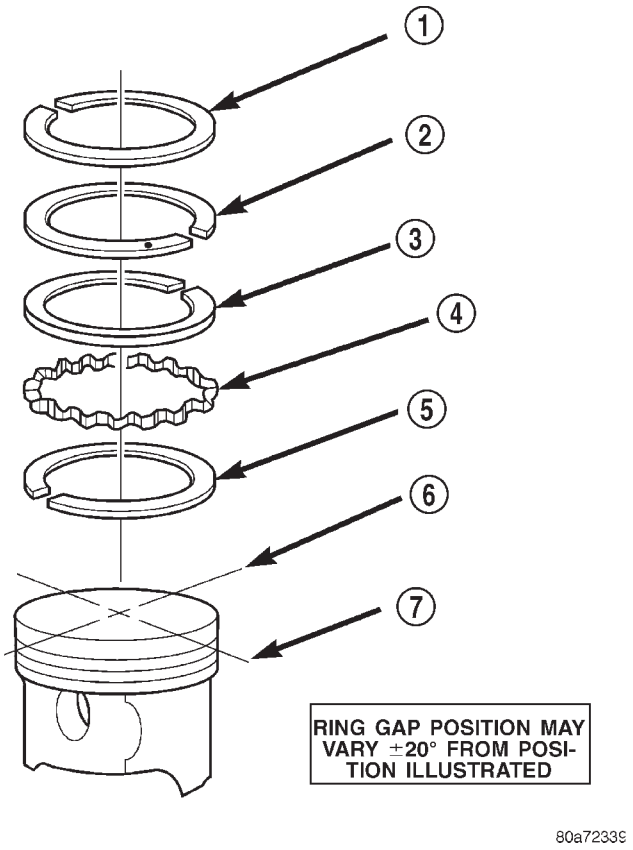

Fig. 69 Ring Gap Orientation

1 - TOP COMPRESSION RING
2 - BOTTOM COMPRESSION RING
3 - TOP OIL CONTROL RAIL
4 - OIL RAIL SPACER
5 - BOTTOM OIL CONTROL RAIL
6 - IMAGINARY LINE PARALLEL TO PISTON PIN
7 - IMAGINARY LINE THROUGH CENTER OF PISTON SKIRT

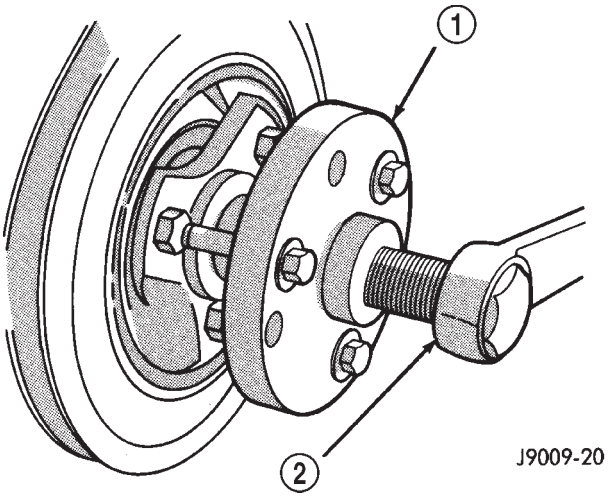

Fig. 70 Vibration Damper Removal Tool 7697

1 - VIBRATION DAMPER REMOVAL TOOL
2 - WRENCH

VIBRATION DAMPER (Continued)

INSTALLATION

(1) Apply Mopar® Silicone Rubber Adhesive Sealant to the keyway in the crankshaft and insert the key. With the key in position, align the keyway on the vibration damper hub with the crankshaft key and tap the damper onto the crankshaft.

(2) Install the vibration damper retaining bolt and washer.

(3) Tighten the damper retaining bolt to 108 N·m (80 ft. lbs.) torque.

(4) Install the serpentine drive belt (Refer to 7 - COOLING/ACCESSORY DRIVE/DRIVE BELTS - INSTALLATION) and fan shroud.

(5) Connect negative cable to battery.

STRUCTURAL SUPPORT

REMOVAL

The engine bending braces are used to add strength to the powertrain and to address some minor NVH concerns.

NOTE: Before the engine or the transmission can be removed the engine bending braces must be removed.

(1) Raise and support vehicle.

NOTE: Both left and right side bending braces are removed the sameway. Only the right side is shown.

NOTE: The exhaust does not require removal to preform this procedure.

(2) Remove the exhaust hanger bracket retaining bolt.

(3) Remove locknut and transmission bending brace bar.

(4) Remove engine-to-bending brace retaining bolt, bending brace bar and cross bar.

INSTALLATION

NOTE: DO NOT tighten the retaining hardware until all bending braces are in place.

(1) Position the cross brace into the engine-to-transmission brace, then position the engine-to-transmission brace and install retaining bolt.

(2) Position the transmission bending brace onto through brace and install new locknut.

(3) Position exhaust hanger and transmission brace, install retaining bolt (Fig. 72).

(4) Tighten engine-to-transmission brace retaining bolt (Fig. 71)to 40 N·m (30 ft. lbs.).

(5) Tighten transmission brace retaining bolts (Fig. 72)to 40 N·m (30 ft. lbs.), then tighten transmission brace retaining lock nuts (Fig. 72) to 108 N·m (80 ft. lbs.).

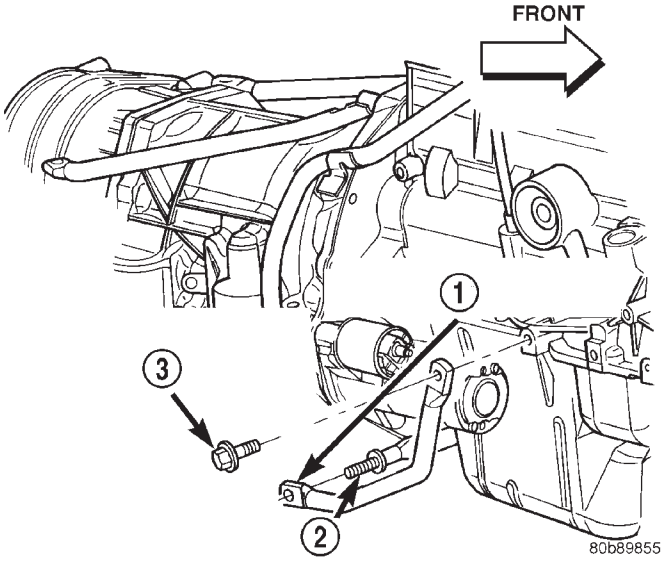

Fig. 71 Engine-to-Transmission Bending Braces

1 - ENGINE-TO-TRANSMISSION BENDING BRACE
2 - CROSS BRACE
3 - ENGINE-TO-TRANSMISSION BENDING BRACE RETAINING BOLT

LUBRICATION

DESCRIPTION

A gear—type positive displacement pump is mounted at the underside of the block opposite the No. 4 main bearing.

OPERATION

The pump draws oil through the screen and inlet tube from the sump at the rear of the oil pan. The oil is driven between the drive and idler gears and pump body, then forced through the outlet to the block. An oil gallery in the block channels the oil to the inlet side of the full flow oil filter. After passing through the filter element, the oil passes from the center outlet of the filter through an oil gallery that channels the oil up to the main gallery which extends the entire length of the block.

Galleries extend downward from the main oil gallery to the upper shell of each main bearing. The crankshaft is drilled internally to pass oil from the main bearing journals (except number 4 main bearing journal) to the connecting rod journals. Each connecting rod bearing cap has a small squirt hole, oil

LUBRICATION (Continued)

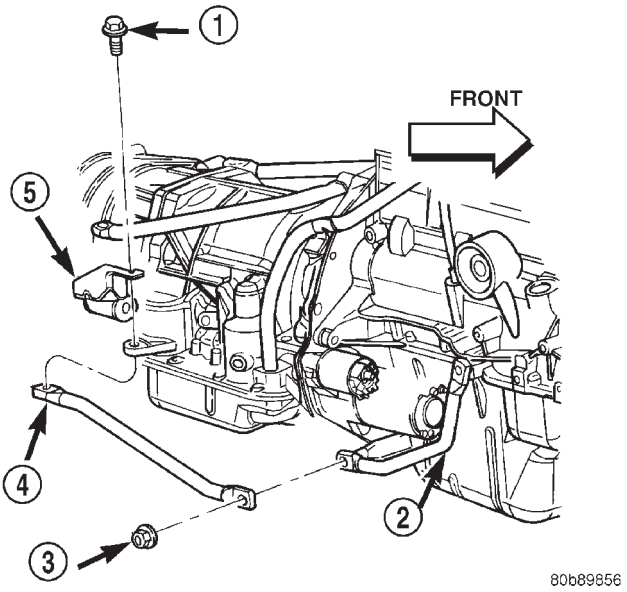

Fig. 72 Transmission Bending Braces and Exhaust Hanger

1 - TRANSMISSION BENDING BRACE RETAINING BOLT
2 - ENGINE-TO-TRANSMISSION BENDING BRACE
3 - LOCKNUT
4 - TRANSMISSION BRACE
5 - EXHAUST HANGER

passes through the squirt hole and is thrown off as the rod rotates. This oil throwoff lubricates the camshaft lobes, distributor drive gear, cylinder walls, and piston pins.

The hydraulic valve tappets receive oil directly from the main oil gallery. Oil is provided to the camshaft bearing through galleries. The front camshaft bearing journal passes oil through the camshaft sprocket to the timing chain. Oil drains back to the oil pan under the number one main bearing cap.

The oil supply for the rocker arms and bridged pivot assemblies is provided by the hydraulic valve tappets which pass oil through hollow push rods to a hole in the corresponding rocker arm. Oil from the rocker arm lubricates the valve train components, then passes down through the push rod guide holes in the cylinder head past the valve tappet area, and returns to the oil pan (Fig. 73).

DIAGNOSIS AND TESTING - ENGINE OIL PRESSURE

(1) Disconnect connector and remove oil pressure sending unit.

(2) Install Oil Pressure Line and Gauge Tool C-3292 or equivalent. Start engine and record pressure. (Refer to 9 - ENGINE - SPECIFICATIONS) for the correct pressures.

DIAGNOSIS AND TESTING - ENGINE OIL LEAK

Begin with a thorough visual inspection of the engine, particularly at the area of the suspected leak. If an oil leak source is not readily identifiable, the following steps should be followed:

(1) Do not clean or degrease the engine at this time because some solvents may cause rubber to swell, temporarily stopping the leak.

(2) Add an oil soluble dye (use as recommended by manufacturer). Start the engine and let idle for approximately 15 minutes. Check the oil dipstick to make sure the dye is thoroughly mixed as indicated with a bright yellow color under a black light.

(3) Using a black light, inspect the entire engine for fluorescent dye, particularly at the suspected area of oil leak. If the oil leak is found and identified, repair per service manual instructions.

(4) If dye is not observed, drive the vehicle at various speeds for approximately 24km (15 miles), and repeat inspection.

(4) **If the oil leak source is not positively identified at this time**, proceed with the air leak detection test method.

Air Leak Detection Test Method

(1) Disconnect the breather cap to air cleaner hose at the breather cap end. Cap or plug breather cap nipple.

(2) Remove the CCV valve from the cylinder head cover. Cap or plug the CCV valve grommet.

(3) Attach an air hose with pressure gauge and regulator to the dipstick tube.

CAUTION: Do not subject the engine assembly to more than 20.6 kpa (3 PSI) of test pressure.

(4) Gradually apply air pressure from 1 psi to 2.5 psi maximum while applying soapy water at the suspected source. Adjust the regulator to the suitable test pressure that provide the best bubbles which will pinpoint the leak source. If the oil leak is detected and identified, repair per service information procedures.

(5) If the leakage occurs at the rear oil seal area, INSPECTION FOR REAR SEAL AREA LEAKS .

(6) If no leaks are detected, turn off the air supply and remove the air hose and all plugs and caps. Install the CCV valve and breather cap hose.

(7) Clean the oil off the suspect oil leak area using a suitable solvent. Drive the vehicle at various speeds approximately 24 km (15 miles). Inspect the engine for signs of an oil leak by using a black light.

INSPECTION FOR REAR SEAL AREA LEAKS

Since it is sometimes difficult to determine the source of an oil leak in the rear seal area of the

LUBRICATION (Continued)

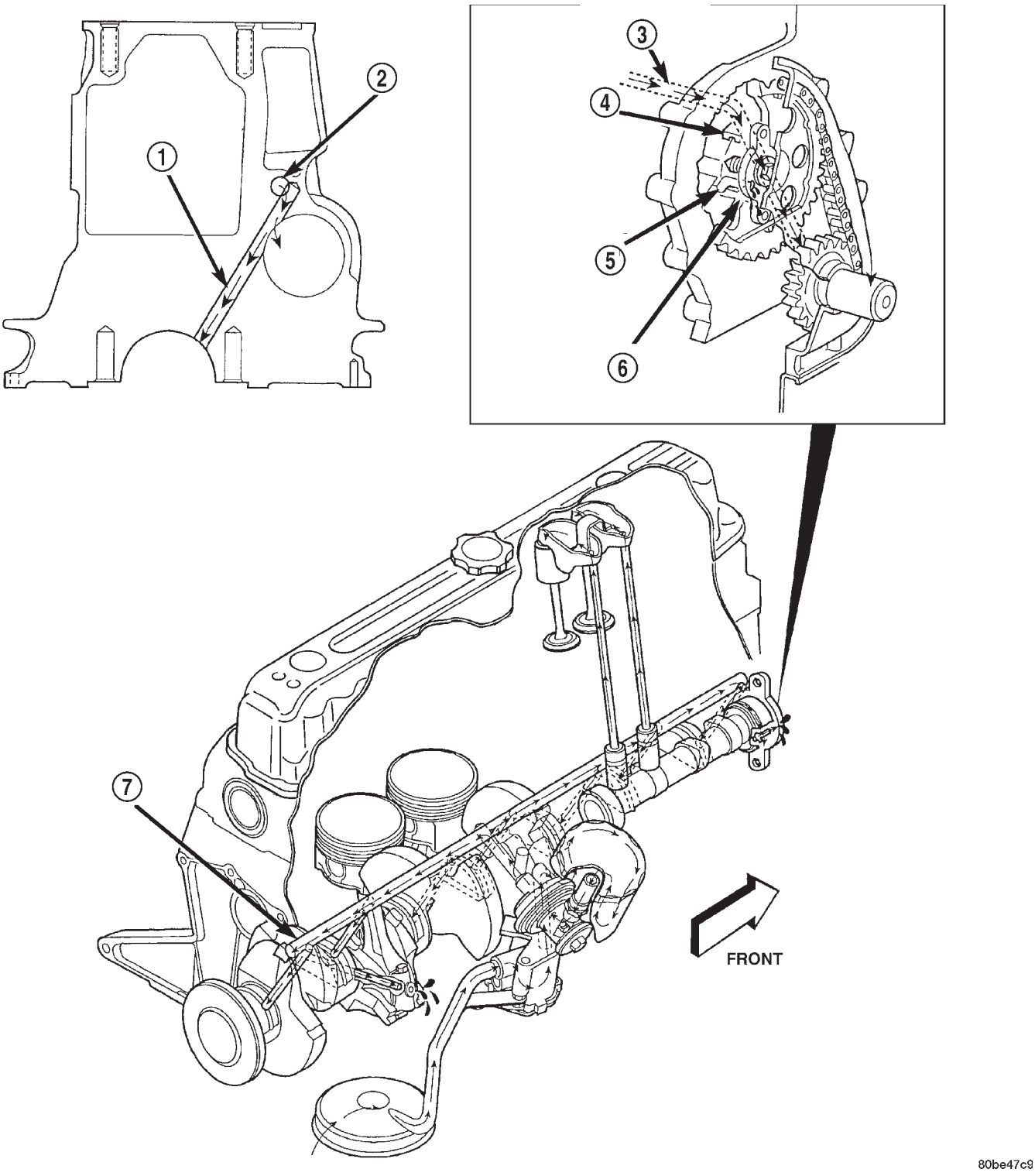

Fig. 73 Oil Lubrication System—4.0L Engine

1 - CAM/CRANK MAIN GALLERY (7)
2 - TAPPET GALLERY
3 - TAPPET GALLERY
4 - CAMSHAFT BEARING
5 - NUMBER 1 CAMSHFT BEARING JOURNAL
6 - CAMSHAFT SPROCKET
7 - TAPPET GALLERY

LUBRICATION (Continued)

engine, a more involved inspection is necessary. The following steps should be followed to help pinpoint the source of the leak.

If the leakage occurs at the crankshaft rear oil seal area:

(1) Disconnect the battery.

(2) Raise the vehicle.

(3) Remove torque converter or clutch housing cover and inspect rear of block for evidence of oil. Use a black light to check for the oil leak:

(a) Circular spray pattern generally indicates seal leakage or crankshaft damage.

(b) Where leakage tends to run straight down, possible causes are a porous block, distributor seal, camshaft bore cup plugs oil galley pipe plugs, oil filter runoff, and main bearing cap to cylinder block mating surfaces.

(4) If no leaks are detected, pressurize the crankcase as outlined in the, Inspection (Engine oil Leaks in general)

CAUTION: Do not exceed 20.6 kPa (3 psi).

(5) If the leak is not detected, very slowly turn the crankshaft and watch for leakage. If a leak is detected between the crankshaft and seal while slowly turning the crankshaft, it is possible the crankshaft seal surface is damaged. The seal area on the crankshaft could have minor nicks or scratches that can be polished out with emery cloth.

CAUTION: Use extreme caution when crankshaft polishing is necessary to remove minor nicks and scratches. The crankshaft seal flange is especially machined to complement the function of the rear oil seal.

(6) For bubbles that remain steady with shaft rotation, no further inspection can be done until disassembled.

OIL

STANDARD PROCEDURE - ENGINE OIL SERVICE

ENGINE OIL CHANGE

Change engine oil at mileage and time intervals described in Maintenance Schedules.

Run engine until achieving normal operating temperature.

(1) Position the vehicle on a level surface and turn engine off.

(2) Hoist and support vehicle on safety stands.

(3) Remove oil fill cap.

(4) Place a suitable drain pan under crankcase drain.

(5) Remove drain plug from crankcase and allow oil to drain into pan. Inspect drain plug threads for stretching or other damage. Replace drain plug if damaged.

(6) Install drain plug in crankcase.

(7) Replace engine oil filter. (Refer to 9 - ENGINE/LUBRICATION/OIL FILTER - REMOVAL).

(8) Lower vehicle and fill crankcase with specified type of engine oil (Refer to LUBRICATION & MAINTENANCE/FLUID TYPES - DESCRIPTION) and amount of engine oil (Refer to LUBRICATION & MAINTENANCE - SPECIFICATIONS).

(9) Install oil fill cap.

(10) Start engine and inspect for leaks.

(11) Stop engine and inspect oil level. Refer to CRANKCASE OIL LEVEL INSPECTION .

USED ENGINE OIL DISPOSAL

Care should be exercised when disposing used engine oil after it has been drained from a vehicle engine.

CRANKCASE OIL LEVEL INSPECTION

CAUTION: Do not overfill crankcase with engine oil, oil foaming and oil pressure loss can result.

The engine oil level indicator (Dipstick) is located at the right rear of the 4.0L engine. Inspect engine oil level approximately every 800 kilometers (500 miles). Unless the engine has exhibited loss of oil pressure, run the engine for about five minutes before checking oil level. Checking engine oil level on a cold engine is not accurate.

To ensure proper lubrication of an engine, the engine oil must be maintained at an acceptable level. The acceptable levels are indicated between the ADD and SAFE marks on the engine oil dipstick (Fig. 74).

(1) Position vehicle on level surface.

(2) With engine OFF, allow approximately ten minutes for oil to settle to bottom of crankcase, remove engine oil dipstick.

(3) Wipe dipstick clean.

(4) Install dipstick and verify it is seated in the tube.

(5) Remove dipstick, with handle held above the tip, take oil level reading (Fig. 74).

OIL (Continued)

(6) Add oil only if level is below the ADD mark on dipstick.

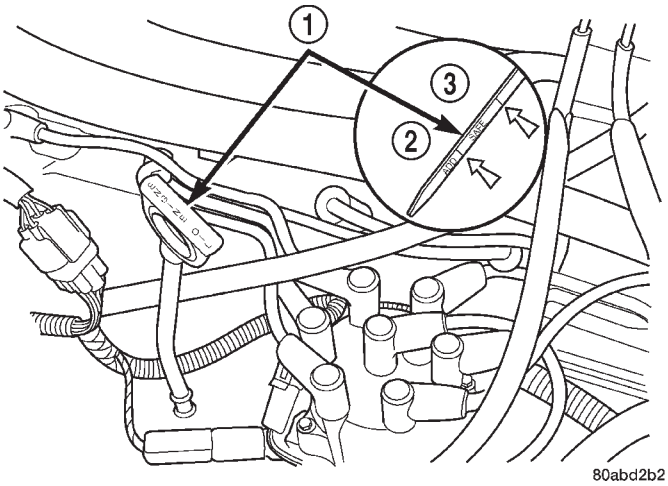

Fig. 74 Engine Oil Dipstick—4.0L Engine

1 - DIPSTICK
2 - ADD
3 - SAFE

OIL FILTER

REMOVAL

CAUTION: Do not use oil filter with metric threads. The proper oil filter has SAE type 3/4 X 16 threads. An oil filter with metric threads can result in oil leaks and engine failure.

All Jeep engines are equipped with a high quality full-flow, throw-away type oil filter. DaimlerChrysler Corporation recommends a Mopar® or equivalent oil filter be used.

(1) Position a drain pan under the oil filter.

(2) Using a suitable oil filter wrench loosen filter.

(3) Rotate the oil filter counterclockwise to remove it from the cylinder block oil filter boss or filter adapter housing (Fig. 75).

(4) When filter separates from adapter nipple, tip gasket end upward to minimize oil spill. Remove filter from vehicle.

(5) Make sure old gasket comes off with oil filter. With a wiping cloth, clean the gasket sealing surface (Fig. 76) of oil and grime.

INSTALLATION

(1) Lightly lubricate oil filter gasket with engine oil or chassis grease.

(2) Thread filter onto adapter nipple. When gasket makes contact with sealing surface, (Fig. 76) hand tighten filter one full turn, do not over tighten.

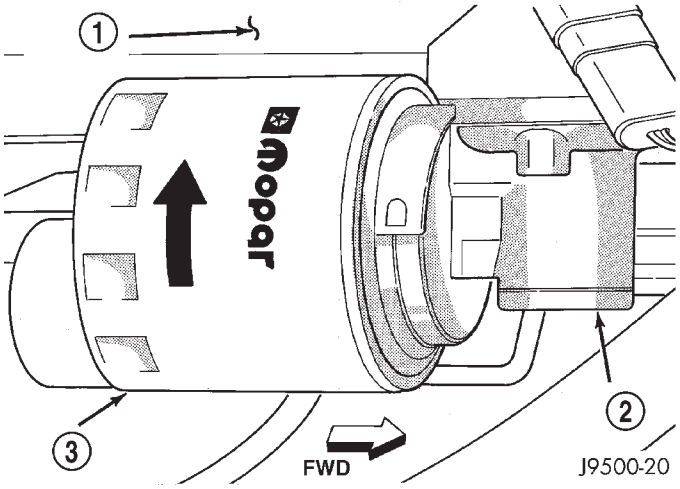

Fig. 75 Oil Filter—4.0L Engine

1 - CYLINDER BLOCK
2 - ADAPTER
3 - OIL FILTER

(3) Add oil, verify crankcase oil level and start engine. Inspect for oil leaks.

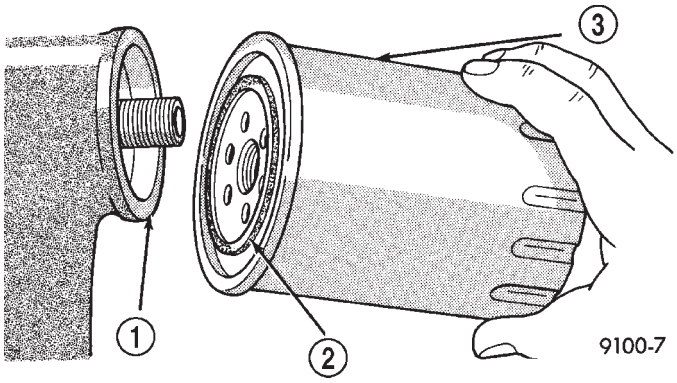

Fig. 76 Oil Filter Sealing Surface—Typical

1 - SEALING SURFACE
2 - RUBBER GASKET
3 - OIL FILTER

OIL PAN

DESCRIPTION

The oil pan is made of stamped steel. The oil pan gasket is a one piece steel backbone silicone coated gasket (Fig. 77).

REMOVAL

(1) Disconnect negative cable from battery.

(2) Raise the vehicle.

(3) Remove the oil pan drain plug and drain the engine oil.

(4) Disconnect the exhaust pipe at the exhaust manifold.

OIL PAN (Continued)

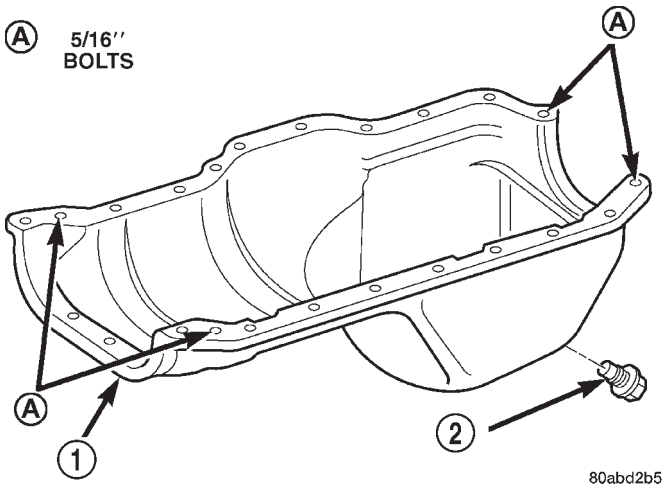

Fig. 77 Oil Pan

1 - OIL PAN
2 - OIL PAN DRAIN PLUG

(5) Disconnect the exhaust hanger at the catalytic converter and lower the pipe.

(6) Remove the starter motor. (Refer to 8 - ELECTRICAL/STARTING/STARTER MOTOR - REMOVAL).

(7) Remove the engine flywheel and transmission torque converter housing access cover.

(8) If equipped with an oil level sensor, disconnect the sensor.

(9) Position a jack stand directly under the engine vibration damper.

(10) Place a piece of wood (2 x 2) between the jack stand and the engine vibration damper.

(11) Remove the engine mount through bolts.

(12) Using the jack stand, raise the engine until adequate clearance is obtained to remove the oil pan.

(13) Remove transmission oil cooling lines (if equipped) and oxygen sensor wiring supports that are attached to the oil pan studs.

(14) Remove the oil pan bolts and studs. Carefully slide the oil pan and gasket to the rear. If equipped with an oil level sensor, take care not to damage the sensor.

INSTALLATION

(1) Clean the block and pan gasket surfaces.

(2) Fabricate 4 alignment dowels from 1 1/2 x 1/4 inch bolts. Cut the head off the bolts and cut a slot into the top of the dowel. This will allow easier installation and removal with a screwdriver (Fig. 78).

(3) Install two dowels in the timing case cover. Install the other two dowels in the cylinder block (Fig. 79).

(4) Apply Mopar® Silicone Rubber Adhesive Sealant on cylinder block to rear main bearing cap corners and cylinder block to front cover joints (four places) (Fig. 80).

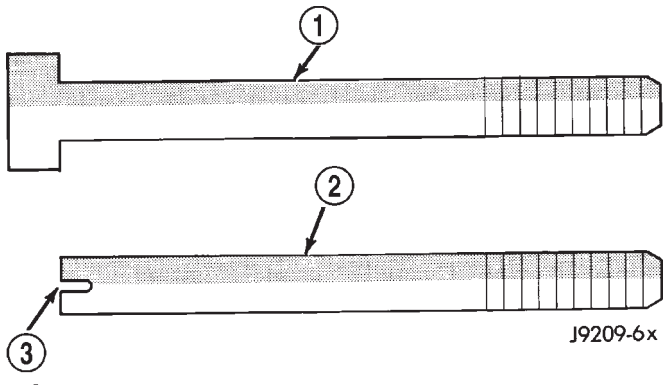

Fig. 78 Fabrication of Alignment Dowels

1 - 1/4'' × 1 1/2'' BOLT
2 - DOWEL
3 - SLOT

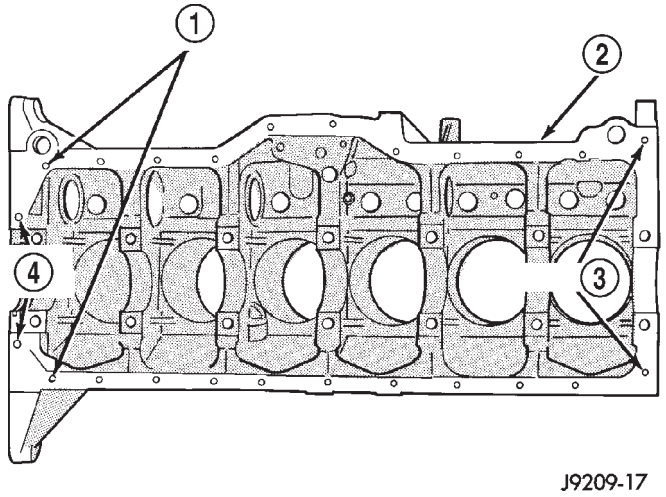

Fig. 79 Position of Dowels in Cylinder Block

1 - DOWEL HOLES
2 - CYLINDER BLOCK
3 - 5/16'' HOLES
4 - 5/16'' HOLES

(5) Slide the one-piece gasket over the dowels and onto the block and timing case cover.

(6) Position the oil pan over the dowels and onto the gasket. If equipped with an oil level sensor, take care not to damage the sensor.

(7) Install the 1/4 inch oil pan bolts. Tighten these bolts to 9.5 N·m (84 in. lbs.) torque. Install the 5/16 inch oil pan bolts (Fig. 81). Tighten these bolts to 15 N·m (132 in. lbs.) torque.

(8) Remove the dowels. Install the remaining 1/4 inch oil pan bolts. Tighten these bolts to 9.5 N·m (84 in. lbs.) torque.

(9) Lower the engine until it is properly located on the engine mounts.

OIL PAN (Continued)

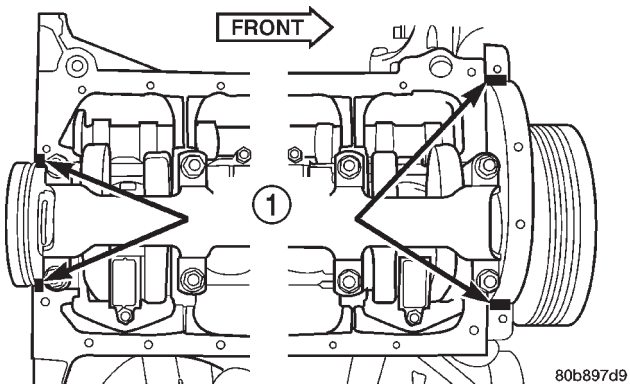

Fig. 80 Oil Pan Sealer Location

1 - SEALER LOCATIONS

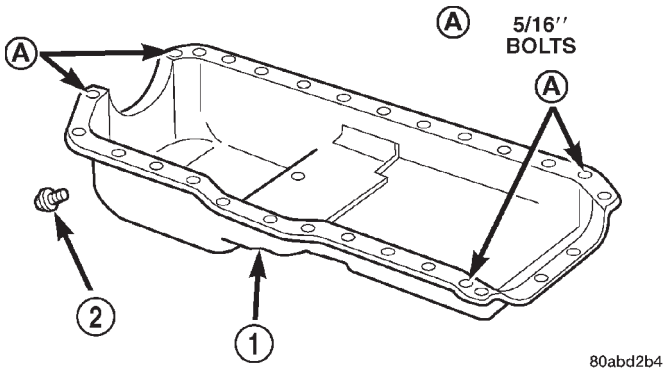

Fig. 81 Position of 5/16 inch Oil Pan Bolts

1 - OIL PAN
2 - OIL PAN DRAIN PLUG

(10) Install the through bolts and tighten the nuts.

(11) Lower the jack stand and remove the piece of wood.

(12) Install the engine flywheel and transmission torque converter housing access cover.

(13) Install the engine starter motor. (Refer to 8 - ELECTRICAL/STARTING/STARTER MOTOR - INSTALLATION).

(14) Connect the exhaust pipe to the hanger and to the engine exhaust manifold.

(15) Install transmission oil cooling lines (if equipped) and oxygen sensor wiring supports that attach to the oil pan studs.

(16) Install the oil pan drain plug (Fig. 81). Tighten the plug to 34 N·m (25 ft. lbs.) torque.

(17) Lower the vehicle.

(18) Connect negative cable to battery.

(19) Fill the oil pan with engine oil to the specified level.

WARNING: USE EXTREME CAUTION WHEN THE ENGINE IS OPERATING. DO NOT STAND IN A DIRECT LINE WITH THE FAN. DO NOT PUT YOUR HANDS NEAR THE PULLEYS, BELTS OR FAN. DO NOT WEAR LOOSE CLOTHING.

(20) Start the engine and inspect for leaks.

ENGINE OIL PRESSURE SENSOR

DESCRIPTION

The 3–wire, solid-state engine oil pressure sensor (sending unit) is located in an engine oil pressure gallery.

OPERATION

The oil pressure sensor uses three circuits. They are:

- A 5–volt power supply from the Powertrain Control Module (PCM)
- A sensor ground through the PCM's sensor return
- A signal to the PCM relating to engine oil pressure

The oil pressure sensor has a 3–wire electrical function very much like the Manifold Absolute Pressure (MAP) sensor. Meaning different pressures relate to different output voltages.

A 5–volt supply is sent to the sensor from the PCM to power up the sensor. The sensor returns a voltage signal back to the PCM relating to engine oil pressure. This signal is then transferred (bussed) to the instrument panel on either a CCD or PCI bus circuit (depending on vehicle line) to operate the oil pressure gauge and the check gauges lamp. Ground for the sensor is provided by the PCM through a low-noise sensor return.

OIL PUMP

REMOVAL

A gear-type oil pump is mounted at the underside of the cylinder block opposite the No.4 main bearing.

(1) Drain the engine oil.

(2) Remove the oil pan (Refer to 9 - ENGINE/LUBRICATION/OIL PAN - REMOVAL).

(3) Remove the pump-to-cylinder block attaching bolts. Remove the pump assembly with gasket (Fig. 82).

CAUTION: If the oil pump is not to be serviced, DO NOT disturb position of oil inlet tube and strainer assembly in pump body. If the tube is moved within the pump body, a replacement tube and strainer assembly must be installed to assure an airtight seal.

OIL PUMP (Continued)

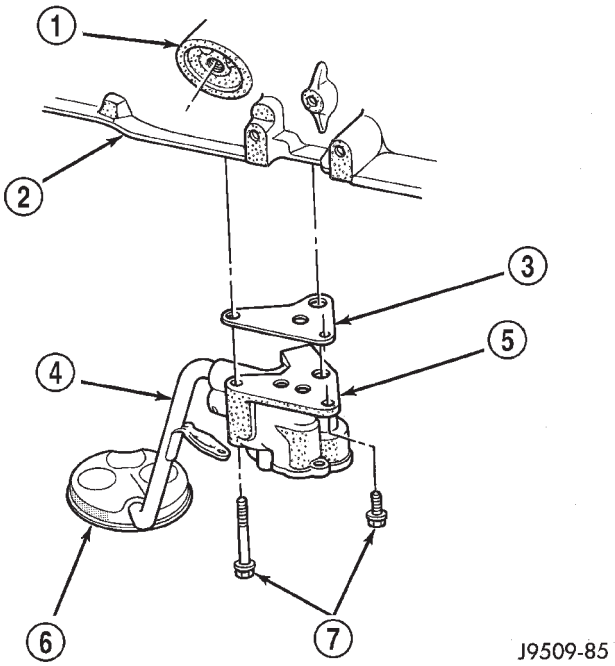

Fig. 82 Oil Pump Assembly

1 - OIL FILTER ADAPTOR
2 - BLOCK
3 - GASKET
4 - OIL INLET TUBE
5 - OIL PUMP
6 - STRAINER ASSEMBLY
7 - ATTACHING BOLTS

INSTALLATION

A gear-type oil pump is mounted at the underside of the cylinder block opposite the No.4 main bearing.

(1) Install the oil pump on the cylinder block using a replacement gasket. Tighten the bolts to 23 N·m (17 ft. lbs.) torque.

(2) Install the oil pan (Refer to 9 - ENGINE/LUBRICATION/OIL PAN - INSTALLATION).

(3) Fill the oil pan with oil to the specified level.

INTAKE MANIFOLD

DESCRIPTION

The intake manifold (Fig. 83) is made of cast aluminum and uses eleven bolts to mount to the cylinder head. This mounting style improves sealing and reduces the chance of leaks.

DIAGNOSIS AND TESTING - INTAKE MANIFOLD LEAKAGE DIAGNOSIS

An intake manifold air leak is characterized by lower than normal manifold vacuum. Also, one or more cylinders may not be functioning.

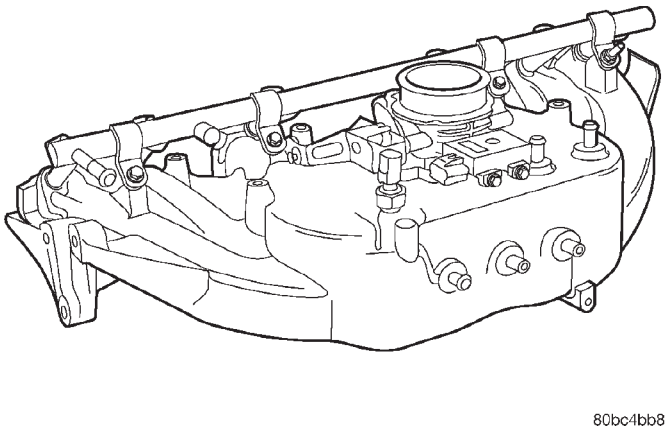

Fig. 83 Intake Manifold 4.0L Engine

WARNING: USE EXTREME CAUTION WHEN THE ENGINE IS OPERATING. DO NOT STAND IN A DIRECT LINE WITH THE FAN. DO NOT PUT YOUR HANDS NEAR THE PULLEYS, BELTS OR THE FAN. DO NOT WEAR LOOSE CLOTHING.

(1) Start the engine.

(2) Spray a small stream of water at the suspected leak area.

(3) If a change in RPM is observed the area of the suspected leak has been found.

(4) Repair as required.

REMOVAL

NOTE: THE ENGINE INTAKE AND EXHAUST MANIFOLD MUST BE REMOVED AND INSTALLED TOGETHER. THE MANIFOLDS USE A COMMON GASKET AT THE CYLINDER HEAD.

(1) Disconnect the battery negative cable.

(2) Remove air cleaner inlet hose from the resonator assembly.

(3) Remove the air cleaner assembly.

(4) Remove the throttle cable, vehicle speed control cable (if equipped) and the transmission line pressure cable (Refer to 21 - TRANSMISSION/TRANSAXLE/AUTOMATIC - AW4/THROTTLE VALVE CABLE - REMOVAL).

(5) Disconnect the following electrical connections and secure their harness out of the way:

- Throttle Position Sensor
- Idle Air Control Motor
- Coolant Temperature Sensor (at thermostat housing)
- Intake Air Temperature Sensor
- Oxygen Sensor
- Crank Position Sensor
- Six (6) Fuel Injector Connectors
- Manifold Absolute Pressure (MAP) Sensor.

INTAKE MANIFOLD (Continued)

(6) Disconnect HVAC, and Brake Booster vacuum supply hoses at the intake manifold.

(7) Perform the fuel pressure release procedure. (Refer to 14 - FUEL SYSTEM/FUEL DELIVERY - STANDARD PROCEDURE).

(8) Disconnect and remove the fuel system supply line from the fuel rail assembly.

(9) Remove the accessory drive belt (Refer to 7 - COOLING/ACCESSORY DRIVE/DRIVE BELTS - REMOVAL).

(10) Remove the power steering pump from the intake manifold and set aside.

(11) Raise the vehicle.

(12) Disconnect the exhaust pipes from the engine exhaust manifolds.

(13) Lower the vehicle.

(14) Remove the intake manifold and exhaust manifold bolts and manifolds (Fig. 84).

INSTALLATION

If the manifold is being replaced, ensure all the fitting, etc. are transferred to the replacement manifold.

(1) Install a new engine exhaust/intake manifold gasket over the alignment dowels on the cylinder head.

(2) Position the engine exhaust manifolds to the cylinder head. Install fastener Number 3 and finger tighten at this time (Fig. 84).

(3) Install intake manifold on the cylinder head dowels.

(4) Install washer and fastener Numbers 1, 2, 4, 5, 8, 9, 10 and 11 (Fig. 84).

(5) Install washer and fastener Numbers 6 and 7 (Fig. 84).

(6) Tighten the fasteners in sequence and to the specified torque (Fig. 84).

- Fastener Numbers 1 through 5—Tighten to 33 N·m (24 ft. lbs.) torque.
- Fastener Numbers 6 and 7—Tighten to 31 N·m (23 ft. lbs.) torque.
- Fastener Numbers 8 through 11—Tighten to 33 N·m (24 ft. lbs.) torque.

(7) Install the power steering pump to the intake manifold.

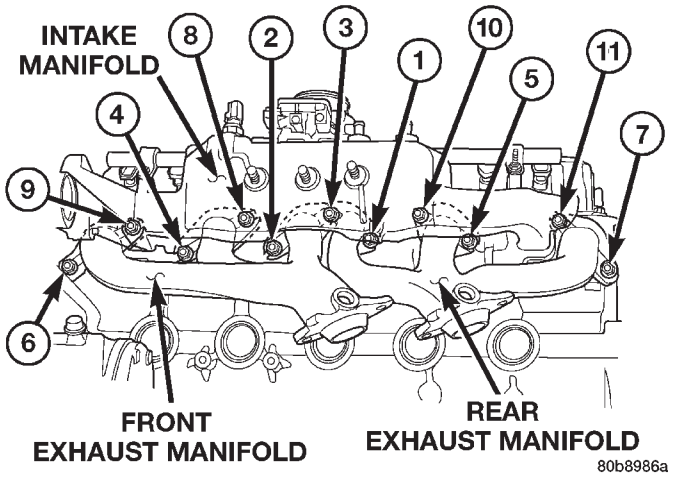

Fig. 84 Intake and Exhaust Manifolds Installation

(8) Install the accessory drive belt (Refer to 7 - COOLING/ACCESSORY DRIVE/DRIVE BELTS - INSTALLATION).

(9) Install the fuel system supply line to the fuel rail assembly.

(10) Connect all electrical connections on the intake manifold.

(11) Connect the vacuum hoses previously removed.

(12) Install throttle cable, vehicle speed control cable (if equipped).

(13) Install the transmission line pressure cable (if equipped) (Refer to 21 - TRANSMISSION/TRANSAXLE/AUTOMATIC - AW4/THROTTLE VALVE CABLE - INSTALLATION).

(14) Install air cleaner assembly.

(15) Connect air inlet hose to the resonator assembly.

(16) Raise the vehicle.

(17) Connect the exhaust pipes to the engine exhaust manifolds. Tighten the bolts to 31 N·m (23 ft. lbs.)

(18) Lower the vehicle.

(19) Connect the battery negative cable.

(20) Start the engine and check for leaks.

EXHAUST MANIFOLD

DESCRIPTION

The two exhaust manifolds (Fig. 85) are log style and are made of high silicon molybdenum cast iron. The exhaust manifolds share a common gasket with the intake manifold. The exhaust manifolds also incorporate ball flange outlets for improved sealing and strain free connections.

REMOVAL

The intake and engine exhaust manifolds on the 4.0L engine must be removed together. The manifolds use a common gasket at the cylinder head.

(Refer to 9 - ENGINE/MANIFOLDS/INTAKE MANIFOLD - REMOVAL).

INSTALLATION

(1) The exhaust manifold and the intake manifold must be installed together using a common gasket.

(2) (Refer to 9 - ENGINE/MANIFOLDS/INTAKE MANIFOLD - INSTALLATION).

TIMING BELT / CHAIN COVER(S)

REMOVAL

(1) Disconnect negative cable from battery.

(2) Remove the vibration damper (Refer to 9 - ENGINE/ENGINE BLOCK/VIBRATION DAMPER - REMOVAL).

(3) Remove the fan, hub assembly and fan shroud (Refer to 7 - COOLING/ENGINE/RADIATOR FAN - REMOVAL).

(4) Remove the accessory drive brackets that are attached to the timing case cover.

(5) Remove the A/C compressor (Refer to 24 - HEATING & AIR CONDITIONING/PLUMBING/A/C COMPRESSOR - REMOVAL) (if equipped) and generator bracket assembly from the engine cylinder head and move to one side.

(6) Remove the oil pan-to-timing case cover bolts and timing case cover-to-cylinder block bolts.

(7) Remove the timing case cover and gasket from the engine.

(8) Pry the crankshaft oil seal from the front of the timing case cover (Fig. 86).

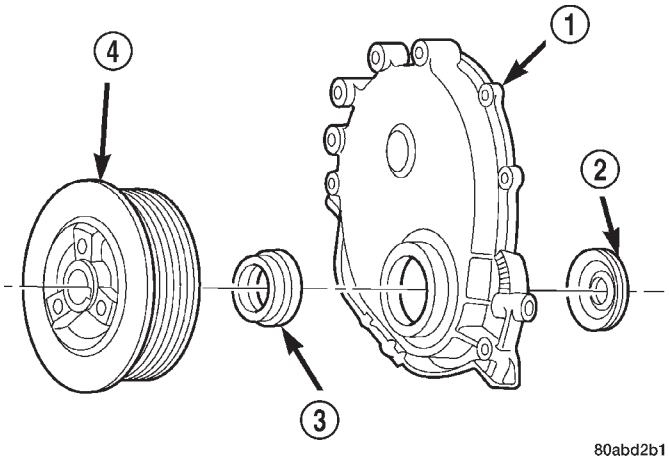

Fig. 86 Timing Case Cover Components

1 - TIMING CASE COVER
2 - OIL SLINGER
3 - CRANKSHAFT OIL SEAL
4 - VIBRATION DAMPER PULLEY

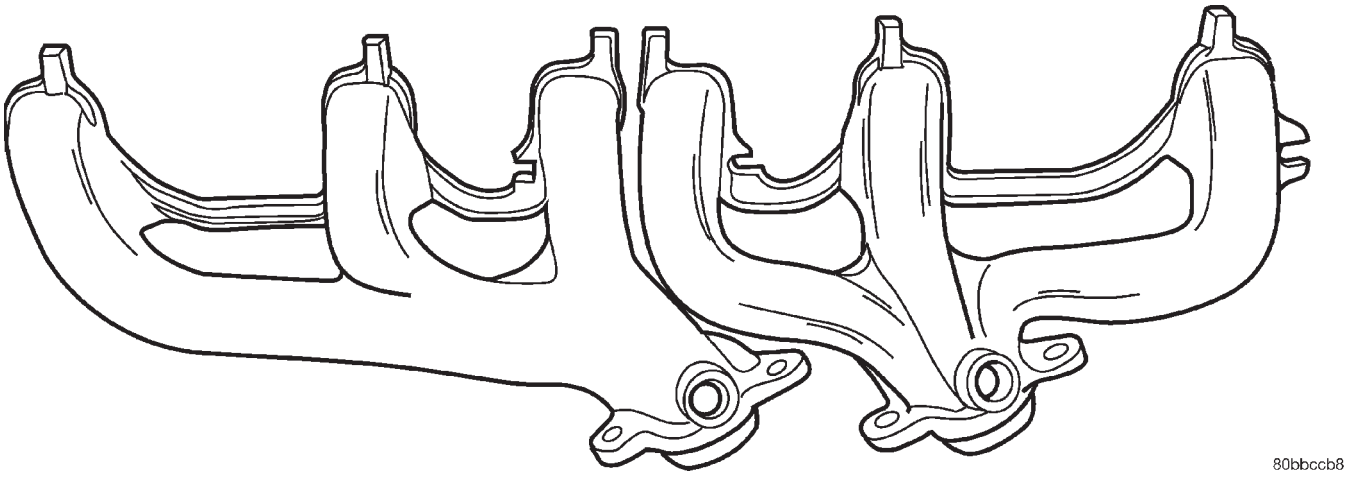

Fig. 85 EXHAUST MANIFOLDS 4.0L ENGINE

TIMING BELT / CHAIN COVER(S) (Continued)

INSTALLATION

Clean the timing case cover, oil pan and cylinder block gasket surfaces.

(1) Install a new crankshaft oil seal in the timing case cover. The open end of the seal should be toward the inside of the cover. Support the cover at the seal area while installing the seal. Force it into position with Seal Installation Tool 6139.

(2) Position the gasket on the cylinder block.

(3) Position the timing case cover on the oil pan gasket and the cylinder block.

(4) Insert Timing Case Cover Alignment and Seal Installation Tool 6139 in the crankshaft opening in the cover (Fig. 87).

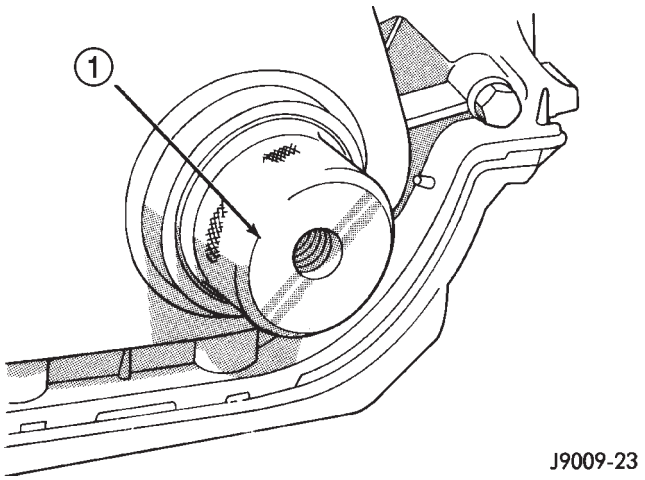

Fig. 87 Timing Case Cover Alignment

1 - TIMING CASE COVER ALIGNMENT AND SEAL INSTALLATION TOOL

(5) Install the timing case cover-to-cylinder block and the oil pan-to-timing case cover bolts.

(6) Tighten the 1/4 inch cover-to-block bolts to 7 N·m (60 in. lbs.) torque. Tighten the 5/16 inch front cover-to-block bolts to 22 N·m (192 in. lbs.) torque. Tighten the oil pan-to-cover 1/4 inch bolts to 9.5 N·m (84 in. lbs.) torque.

(7) Remove the cover alignment tool.

(8) Apply a light film of engine oil on the vibration damper hub contact surface of the seal.

(9) Apply Mopar® Silicone Rubber Adhesive Sealant to the keyway in the crankshaft and insert the key. With the key inserted in the keyway in the crankshaft, install the vibration damper (Refer to 9 - ENGINE/ENGINE BLOCK/VIBRATION DAMPER - INSTALLATION).

(10) Install the A/C compressor (Refer to 24 - HEATING & AIR CONDITIONING/PLUMBING/A/C COMPRESSOR - INSTALLATION) (if equipped) and generator bracket assembly.

(11) Install the engine fan, hub assembly and shroud (Refer to 7 - COOLING/ENGINE/RADIATOR FAN - INSTALLATION).

(12) Install the serpentine drive belt (Refer to 7 - COOLING/ACCESSORY DRIVE/DRIVE BELTS - INSTALLATION).

(13) Connect negative cable to battery.

TIMING BELT/CHAIN AND SPROCKETS

REMOVAL

(1) Disconnect negative cable from battery.

(2) Remove the fan and shroud (Refer to 7 - COOLING/ENGINE/RADIATOR FAN - REMOVAL).

(3) Remove the serpentine drive belt (Refer to 7 - COOLING/ACCESSORY DRIVE/DRIVE BELTS - REMOVAL).

(4) Remove the crankshaft vibration damper (Refer to 9 - ENGINE/ENGINE BLOCK/VIBRATION DAMPER - REMOVAL).

(5) Remove the timing case cover (Refer to 9 - ENGINE/VALVE TIMING/TIMING BELT / CHAIN COVER(S) - REMOVAL).

(6) Rotate crankshaft until the “0” timing mark is closest to and on the center line with camshaft sprocket timing mark (Fig. 88).

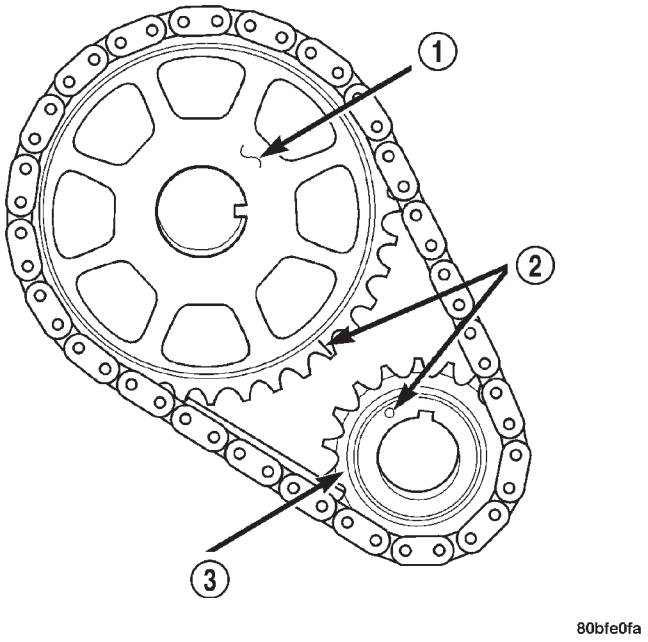

Fig. 88 Crankshaft—Camshaft Alignment

1 - CAMSHAFT SPROCKET
2 - TIMING MARKS
3 - CRANKSHAFT SPROCKET

TIMING BELT/CHAIN AND SPROCKETS (Continued)

(7) Remove the oil slinger from the crankshaft.

(8) Remove the camshaft sprocket bolt and washer (Fig. 89).

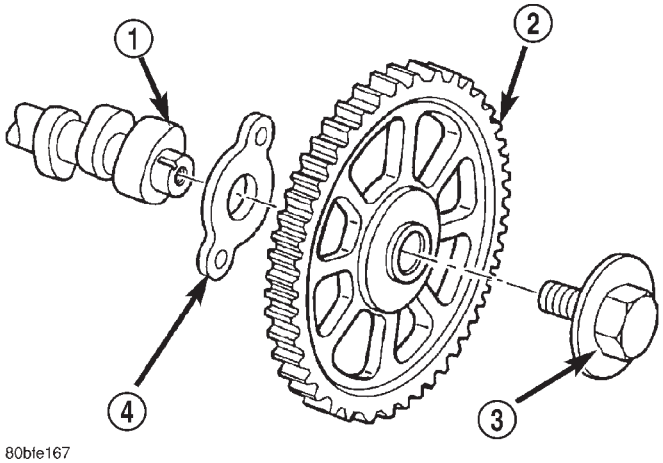

Fig. 89 Camshaft Sprocket and Thrust Plate

1 - CAMSHAFT
2 - CAMSHAFT SPROCKET W/INTEGRAL KEY
3 - BOLT AND WASHER
4 - THRUST PLATE

(9) Remove the crankshaft sprocket, camshaft sprocket and timing chain as an assembly.

(10) Installation of the timing chain with the timing marks on the crankshaft and camshaft sprockets properly aligned ensures correct valve timing. A worn or stretched timing chain will adversely affect valve timing. If the timing chain deflects more than 12.7 mm (1/2 inch) replace it.

INSTALLATION

Assemble the timing chain, crankshaft sprocket and camshaft sprocket with the timing marks aligned (Fig. 88).

(1) Apply Mopar® Silicone Rubber Adhesive Sealant to the keyway in the crankshaft and insert the key. With the key in the keyway on the crankshaft, install the assembly on the crankshaft and camshaft.

(2) Install the camshaft sprocket bolt and washer (Fig. 89). Tighten the bolt to 68 N·m (50 ft. lbs.) torque.

(3) To verify correct installation of the timing chain, rotate the crankshaft 2 revolutions. The camshaft and crankshaft sprocket timing mark should align (Fig. 88).

(4) Install the crankshaft oil slinger.

(5) Replace the oil seal in the timing case cover (Refer to 9 - ENGINE/ENGINE BLOCK/CRANKSHAFT OIL SEAL - FRONT - REMOVAL).

(6) Install the timing case cover and gasket (Refer to 9 - ENGINE/VALVE TIMING/TIMING BELT / CHAIN COVER(S) - INSTALLATION).

(7) With the key installed in the crankshaft keyway, install the vibration damper (Refer to 9 - ENGINE/ENGINE BLOCK/VIBRATION DAMPER - INSTALLATION).

(8) Install the serpentine drive belt (Refer to 7 - COOLING/ACCESSORY DRIVE/DRIVE BELTS - INSTALLATION).

(9) Install the fan, hub assembly and shroud (Refer to 7 - COOLING/ENGINE/RADIATOR FAN - INSTALLATION).

(10) Connect negative cable to battery.

ENGINE 4.7L

TABLE OF CONTENTS

page

ENGINE 4.7L
DESCRIPTION 64
DIAGNOSIS AND TESTING 64
ENGINE DIAGNOSIS - INTRODUCTION 64
SERVICE DIAGNOSIS - PERFORMANCE 65
SERVICE DIAGNOSIS - MECHANICAL 67
SERVICE DIAGNOSIS - LUBRICATION 68
CYLINDER COMPRESSION PRESSURE TEST . . . 69
CYLINDER COMBUSTION PRESSURE LEAKAGE TEST 70
STANDARD PROCEDURE 70
REPAIR DAMAGED OR WORN THREADS 70
FORM-IN-PLACE GASKETS AND SEALERS . . . 70
ENGINE GASKET SURFACE PREPARATION . . 71
ENGINE CORE AND OIL GALLERY PLUGS . . . 72
REMOVAL 72
INSTALLATION 74
SPECIFICATIONS 75
SPECIAL TOOLS 78
AIR CLEANER ELEMENT
REMOVAL 82
INSTALLATION 82
AIR CLEANER HOUSING
REMOVAL 82
INSTALLATION 82
CYLINDER HEAD - LEFT
DESCRIPTION 82
DIAGNOSIS AND TESTING 83
HYDRAULIC LASH ADJUSTER NOISE DIAGNOSIS . . . 83
CYLINDER HEAD GASKET 83
REMOVAL 83
CLEANING 85
INSPECTION 85
INSTALLATION 85
CAMSHAFT(S) - LEFT
DESCRIPTION 87
REMOVAL 87
INSTALLATION 89
CYLINDER HEAD COVER(S) - LEFT
DESCRIPTION 92
REMOVAL 92
CLEANING 92
INSTALLATION 92
INTAKE/EXHAUST VALVES & SEATS
DESCRIPTION 93
STANDARD PROCEDURE 93
REFACING 93
REMOVAL 93
INSTALLATION 94

page

ROCKER ARM / ADJUSTER ASSEMBLY
DESCRIPTION 94
REMOVAL 95
INSTALLATION 95
VALVE SPRINGS
DESCRIPTION 96
VALVE STEM SEALS
DESCRIPTION 96
CYLINDER HEAD - RIGHT
DESCRIPTION 96
DIAGNOSIS AND TESTING 96
CYLINDER HEAD GASKET 96
HYDRAULIC LASH ADJUSTER NOISE DIAGNOSIS 97
REMOVAL 97
CLEANING 98
INSPECTION 98
INSTALLATION 98
CAMSHAFT(S) - RIGHT
DESCRIPTION 99
REMOVAL 99
INSTALLATION 100
CYLINDER HEAD COVER(S) - RIGHT
DESCRIPTION 103
REMOVAL 103
CLEANING 103
INSTALLATION 103
INTAKE/EXHAUST VALVES & SEATS
DESCRIPTION 103
STANDARD PROCEDURE 104
REFACING 104
REMOVAL 104
INSTALLATION 105
ROCKER ARM / ADJUSTER ASSEMBLY
DESCRIPTION 106
REMOVAL 106
INSTALLATION 106
VALVE SPRINGS
DESCRIPTION 107
VALVE STEM SEALS
DESCRIPTION 107
ENGINE BLOCK
DESCRIPTION 107
STANDARD PROCEDURE 107
CYLINDER BORE HONING 107
CLEANING 107
INSPECTION 108
CONNECTING ROD BEARINGS
STANDARD PROCEDURE 108
CONNECTING ROD BEARING FITTING 108

CRANKSHAFT
DESCRIPTION 110
STANDARD PROCEDURE 110
CRANKSHAFT END PLAY. 110
REMOVAL. 111
INSPECTION 111
INSTALLATION 111
CRANKSHAFT MAIN BEARINGS
STANDARD PROCEDURE 114
CRANKSHAFT MAIN BEARING-FITTING 114
INSPECTION 114
CRANKSHAFT OIL SEAL - FRONT
REMOVAL 115
INSTALLATION 115
CRANKSHAFT OIL SEAL - REAR
REMOVAL 116
INSTALLATION 116
FLEX PLATE
REMOVAL 116
INSTALLATION 117
PISTON & CONNECTING ROD
DESCRIPTION 117
STANDARD PROCEDURE 117
PISTON FITTING 117
REMOVAL 118
CLEANING 119
INSPECTION 119
INSTALLATION 119
PISTON RINGS
STANDARD PROCEDURE 120
PISTON RING FITTING. 120
VIBRATION DAMPER
REMOVAL 121
INSTALLATION 122
STRUCTURAL COVER
DESCRIPTION 123
OPERATION. 123
REMOVAL 123
INSTALLATION 123
FRONT MOUNT
REMOVAL 124
INSTALLATION 124
REAR MOUNT
REMOVAL 124
INSTALLATION 125
LUBRICATION
DESCRIPTION 126
OPERATION. 127
DIAGNOSIS AND TESTING 127
CHECKING ENGINE OIL PRESSURE 127
REAR SEAL AREA LEAKS 128
ENGINE OIL LEAK INSPECTION 128
OIL
STANDARD PROCEDURE 129
ENGINE OIL 129
OIL FILTER
REMOVAL 131
INSTALLATION. 131
OIL PAN
DESCRIPTION 131
REMOVAL 131
CLEANING 132
INSPECTION 132
INSTALLATION. 132
OIL PRESSURE SENSOR/SWITCH
DESCRIPTION 132
OPERATION. 132
REMOVAL 132
INSTALLATION. 133
OIL PUMP
REMOVAL 133
DISASSEMBLY. 133
CLEANING 133
INSPECTION 133
ASSEMBLY 135
INSTALLATION. 135
INTAKE MANIFOLD
DESCRIPTION 135
DIAGNOSIS AND TESTING 136
INTAKE MANIFOLD LEAKAGE 136
REMOVAL 136
CLEANING 136
INSPECTION 137
INSTALLATION. 137
EXHAUST MANIFOLD - LEFT
DESCRIPTION 137
REMOVAL 138
CLEANING 138
INSPECTION 138
INSTALLATION. 138
EXHAUST MANIFOLD - RIGHT
DESCRIPTION 138
REMOVAL 138
CLEANING 139
INSPECTION 139
INSTALLATION. 139
VALVE TIMING
DESCRIPTION 140
OPERATION. 141
STANDARD PROCEDURE 142
ENGINE TIMING - VERIFICATION 142
MEASURING TIMING CHAIN WEAR. 143
TIMING BELT / CHAIN COVER(S)
REMOVAL 146
INSTALLATION. 146
TIMING BELT/CHAIN AND SPROCKETS
REMOVAL 146
INSPECTION 147
INSTALLATION. 148

ENGINE 4.7L

DESCRIPTION—4.7L ENGINE

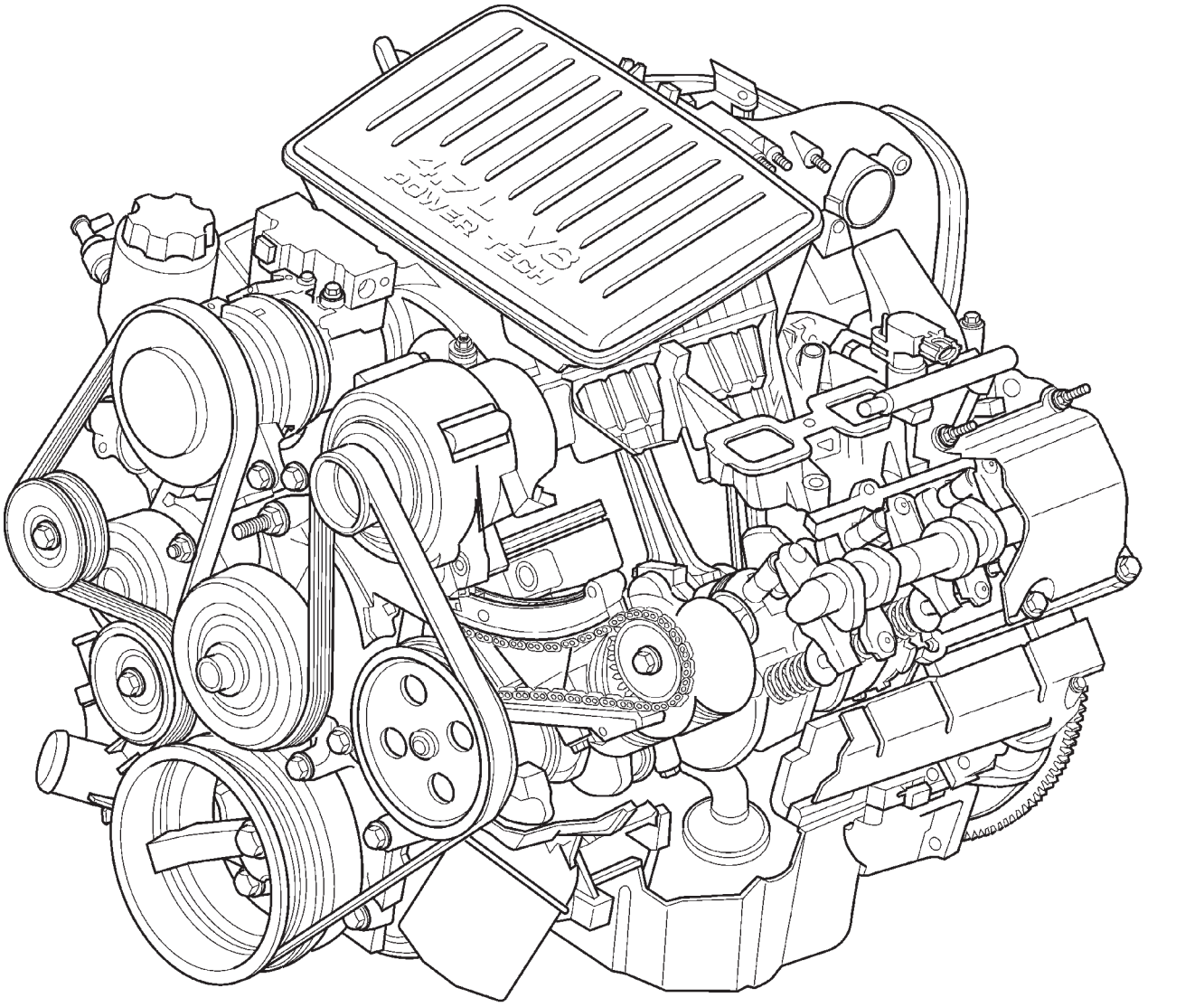

80b3b148

The 4.7 liter (287 CID) eight-cylinder engine is an 90° single overhead camshaft engine. The cast iron cylinder block is made up of two different components; the first component is the cylinder bore and upper block, the second component is the bedplate that comprises the lower portion of the cylinder block and houses the lower half of the crankshaft main bearings. The cylinders are numbered from front to rear with the left bank being numbered 1,3,5 and 7, and the right bank being numbered 2,4,6 and 8. The firing order is 1–8–4–3–6–5–7–2. The engine serial number is located at the right front side of the engine block (Fig. 1)

DIAGNOSIS AND TESTING—ENGINE

DIAGNOSIS - INTRODUCTION

Engine diagnosis is helpful in determining the causes of malfunctions not detected and remedied by routine maintenance.

These malfunctions may be classified as either performance (e.g., engine idles rough and stalls) or mechanical (e.g., a strange noise).

ENGINE 4.7L (Continued)

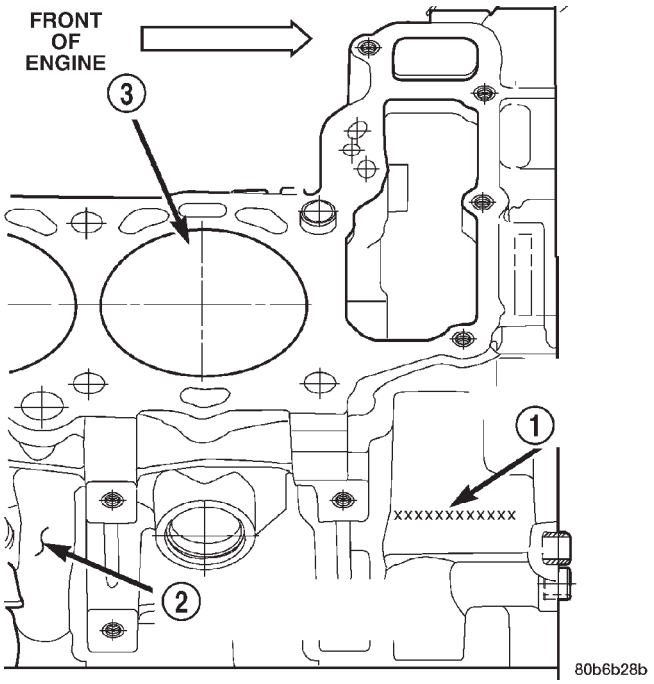

Fig. 1 Engine Identification Location

1 - VEHICLE VIN NUMBER LOCATION
2 - CYLINDER BLOCK RIGHT HAND SIDE
3 - CYLINDER BORE #2

(Refer to 9 - ENGINE - DIAGNOSIS AND TESTING)—PERFORMANCE and (Refer to 9 - ENGINE - DIAGNOSIS AND TESTING)—MECHANICAL for possible causes and corrections of malfunctions. (Refer to 14 - FUEL SYSTEM/FUEL DELIVERY - DIAGNOSIS AND TESTING) and (Refer to 14 - FUEL SYSTEM/FUEL INJECTION - DIAGNOSIS AND TESTING) for the fuel system diagnosis.

Additional tests and diagnostic procedures may be necessary for specific engine malfunctions that can not be isolated with the Service Diagnosis charts. Information concerning additional tests and diagnosis is provided within the following diagnosis:

- Cylinder Compression Pressure Test (Refer to 9 - ENGINE - DIAGNOSIS AND TESTING).
- Cylinder Combustion Pressure Leakage Test (Refer to 9 - ENGINE - DIAGNOSIS AND TESTING).
- Engine Cylinder Head Gasket Failure Diagnosis (Refer to 9 - ENGINE/CYLINDER HEAD - DIAGNOSIS AND TESTING).
- Intake Manifold Leakage Diagnosis (Refer to 9 - ENGINE/MANIFOLDS/INTAKE MANIFOLD - DIAGNOSIS AND TESTING).

DIAGNOSIS AND TESTING—SERVICE DIAGNOSIS - PERFORMANCE

CONDITION	POSSIBLE CAUSE	CORRECTION
ENGINE WILL NOT START	1. Weak battery	1. Charge or replace as necessary.
	2. Corroded or loose battery connections.	2. Clean and tighten battery connections. Apply a coat of light mineral grease to the terminals.
	3. Faulty starter.	3. (Refer to 8 - ELECTRICAL/ STARTING - DIAGNOSIS AND TESTING).
	4. Faulty coil or control unit.	4. (Refer to 8 - ELECTRICAL/ IGNITION CONTROL/IGNITION COIL - REMOVAL).
	5. Incorrect spark plug gap.	5. (Refer to 8 - ELECTRICAL/ IGNITION CONTROL/SPARK PLUG - CLEANING).
	6. Dirt or water in fuel system.	6. Clean system and replace fuel filter.
	7. Faulty fuel pump, relay or wiring.	7. Repair or replace as necessary.

ENGINE 4.7L (Continued)

CONDITION	POSSIBLE CAUSE	CORRECTION
ENGINE STALLS OR ROUGH IDLE	1. Idle speed set to low.	1. (Refer to 14 - FUEL SYSTEM/ FUEL INJECTION/IDLE AIR CONTROL MOTOR - REMOVAL).
	2. Idle mixture to lean or to rich.	2. Refer to Powertrain Diagnosis Information.
	3. Vacuum leak.	3. Inspect intake manifold and vacuum hoses, repair or replace as necessary.
	4. Faulty coil.	4. (Refer to 8 - ELECTRICAL/ IGNITION CONTROL/IGNITION COIL - REMOVAL).
	5. Incorrect engine timing.	5. (Refer to 9 - ENGINE/VALVE TIMING - STANDARD PROCEDURE).
	1. Dirty or incorrectly gapped spark plugs.	1. (Refer to 8 - ELECTRICAL/ IGNITION CONTROL/SPARK PLUG - CLEANING).
	2. Dirt or water in fuel system.	2. Clean system and replace fuel filter.
	3. Faulty fuel pump.	3. (Refer to 14 - FUEL SYSTEM/ FUEL DELIVERY/FUEL PUMP - DIAGNOSIS AND TESTING).
	4. Blown cylinder head gasket.	4. Replace cylinder head gasket.
	5. Low compression.	5. (Refer to 9 - ENGINE - DIAGNOSIS AND TESTING), repair as necessary.
	6. Burned, warped or pitted valves.	6. Replace as necessary.
	7. Plugged or restricted exhaust system.	7. Inspect and replace as necessary.
	8. Faulty coil.	8. (Refer to 8 - ELECTRICAL/ IGNITION CONTROL/IGNITION COIL - REMOVAL).
	1. Spark plugs dirty or incorrectly gapped.	1. (Refer to 8 - ELECTRICAL/ IGNITION CONTROL/SPARK PLUG - CLEANING).
	2. Dirt in fuel system.	2. Clean fuel system.
	3. Burned, warped or pitted valves.	3. Replcae as necessary.
	4. Faulty coil.	4. (Refer to 8 - ELECTRICAL/ IGNITION CONTROL/IGNITION COIL - REMOVAL).

ENGINE 4.7L (Continued)

CONDITION	POSSIBLE CAUSE	CORRECTION
	1. Spark plugs dirty or incorrectly gapped.	1. (Refer to 8 - ELECTRICAL/ IGNITION CONTROL/SPARK PLUG - CLEANING).
	2. Faulty coil.	2. (Refer to 8 - ELECTRICAL/ IGNITION CONTROL/IGNITION COIL - REMOVAL).
	3. Dirt or water in fuel system.	3. Clean system and replace fuel filter.

DIAGNOSIS AND TESTING—SERVICE DIAGNOSIS - MECHANICAL

CONDITION	POSSIBLE CAUSES	CORRECTIONS
NOISY VALVES	1. High or low oil level in crankcase.	1. (Refer to LUBRICATION & MAINTENANCE/FLUID TYPES - SPECIFICATIONS).
	2. Thin or diluted oil.	2. Change oil and filter.
	3. Low oil pressure.	3. Check oil pump, if Ok, check rod and main bearings for excessive wear.
	4. Dirt in lash adjusters.	4. Replace as necessary.
	5. Worn rocker arms.	5. Replace as necessary.
	6. Worn lash adjusters	6. Replace as necessary.
	7. Worn valve guides.	7. (Refer to 9 - ENGINE/CYLINDER HEAD/INTAKE/EXHAUST VALVES & SEATS - STANDARD PROCEDURE).
	8. Excessive runout of valve seats on valve faces.	8. Service valves and valve seats. (Refer to 9 - ENGINE/CYLINDER HEAD/INTAKE/EXHAUST VALVES & SEATS - STANDARD PROCEDURE).
CONNECTING ROD NOISE	1. Insufficient oil supply.	1. (Refer to LUBRICATION & MAINTENANCE/FLUID TYPES - SPECIFICATIONS).
	2. Low oil pressure.	2. Check oil pump, if Ok, check rod and main bearings for excessive wear.
	3. Thin or diluted oil.	3. Change oil and filter.
	4. Excessive bearing clearance.	4. Replace as necessary.
	5. Connecting rod journal out-of-round.	5. Service or replace crankshaft.
	6. Misaligned connecting rods.	6. Replace bent connecting rods.

ENGINE 4.7L (Continued)

CONDITION	POSSIBLE CAUSES	CORRECTIONS
MAIN BEARING NOISE	1. Insufficient oil supply.	1. (Refer to LUBRICATION & MAINTENANCE/FLUID TYPES - SPECIFICATIONS).
	2. Low oil pressure.	2. Check oil pump, if Ok, check rod and main bearings for excessive wear.
	3. Thin or diluted oil.	3. Change oil and filter.
	4. Excessive bearing clearance.	4. Replace as necessary.
	5. Excessive end play.	5. Check thrust washers for wear.
	6. Crankshaft journal out-of round.	6. Service or replace crankshaft.
	7. Loose flywheel or torque converter.	7. Tighten to correct torque

DIAGNOSIS AND TESTING—SERVICE DIAGNOSIS - LUBRICATION

CONDITION	POSSIBLE CAUSES	CORRECTION
OIL LEAKS	1. Gaskets and O-Rings.	1.
	(a) Misaligned or damaged.	(a) Replace as necessary.
	(b) Loose fasteners, broken or porous metal parts.	(b) Tighten fasteners, Repair or replace metal parts.
	2. Crankshaft rear seal	2. Replace as necessary (Refer to 9 - ENGINE/ENGINE BLOCK/ CRANKSHAFT OIL SEAL - REAR - REMOVAL).
	3. Crankshaft seal flange. Scratched, nicked or grooved.	3. Polish or replace crankshaft.
	4. Oil pan flange cracked.	4. Replace oil pan (Refer to 9 - ENGINE/LUBRICATION/OIL PAN - REMOVAL).
	5. Timing chain cover seal, damaged or misaligned.	5. Replace seal (Refer to 9 - ENGINE/ENGINE BLOCK/ CRANKSHAFT OIL SEAL - FRONT - REMOVAL).
	6. Scratched or damaged vibration damper hub.	6. Polish or replace damper.

ENGINE 4.7L (Continued)

CONDITION	POSSIBLE CAUSES	CORRECTION
OIL PRESSURE DROP	1. Low oil level.	1. Check and correct oil level.
	2. Faulty oil pressure sending unit.	2. Replace sending unit (Refer to 9 - ENGINE/LUBRICATION/OIL PRESSURE SENSOR/SWITCH - REMOVAL).
	3. Low oil pressure.	3. Check oil pump and bearing clearance.
	4. Clogged oil filter.	4. Replace oil filter (Refer to 9 - ENGINE/LUBRICATION/OIL FILTER - REMOVAL).
	5. Worn oil pump.	5. Replace oil pump (Refer to 9 - ENGINE/LUBRICATION/OIL PUMP - REMOVAL).
	6. Thin or diluted oil.	6. Change oil and filter.
	7. Excessive bearing clearance.	7. Replace as necessary.
	8. Oil pump relief valve stuck.	8. Replace oil pump (Refer to 9 - ENGINE/LUBRICATION/OIL PUMP - REMOVAL).
	9. Oil pump suction tube loose or damaged.	9. Replace as necessary.
OIL PUMPING AT RINGS; SPARK PLUGS FOULING	1. Worn or damaged rings.	1. Hone cylinder bores and replace rings.
	2. Carbon in oil ring slots.	2. Replace rings (Refer to 9 - ENGINE/ENGINE BLOCK/PISTON RINGS - STANDARD PROCEDURE).
	3. Incorrect ring size installed.	3. Replace rings (Refer to 9 - ENGINE/ENGINE BLOCK/PISTON RINGS - STANDARD PROCEDURE).
	4. Worn valve guides.	4. Ream guides and replace valves (Refer to 9 - ENGINE/CYLINDER HEAD/INTAKE/EXHAUST VALVES & SEATS - STANDARD PROCEDURE).
	5. Leaking valve guide seals.	5. Replace valve guide seals.

DIAGNOSIS AND TESTING—CYLINDER COMPRESSION PRESSURE TEST

The results of a cylinder compression pressure test can be utilized to diagnose several engine malfunctions.

Ensure the battery is completely charged and the engine starter motor is in good operating condition. Otherwise the indicated compression pressures may not be valid for diagnosis purposes.

(1) Clean the spark plug recesses with compressed air.

(2) Remove the spark plugs.

(3) Secure the throttle in the wide-open position.

(4) Disable the fuel system (Refer to 14 - FUEL SYSTEM/FUEL DELIVERY - DESCRIPTION).

(5) Disconnect the ignition coil.

(6) Insert a compression pressure gauge and rotate the engine with the engine starter motor for three revolutions.

(7) Record the compression pressure on the 3rd revolution. Continue the test for the remaining cylinders.

ENGINE 4.7L (Continued)

(Refer to 9 - ENGINE - SPECIFICATIONS) for the correct engine compression pressures.

DIAGNOSIS AND TESTING—CYLINDER COMBUSTION PRESSURE LEAKAGE

The combustion pressure leakage test provides an accurate means for determining engine condition.

Combustion pressure leakage testing will detect:

- Exhaust and intake valve leaks (improper seating).
- Leaks between adjacent cylinders or into water jacket.
- Any causes for combustion/compression pressure loss.

(1) Check the coolant level and fill as required. DO NOT install the radiator cap.

(2) Start and operate the engine until it attains normal operating temperature, then turn the engine OFF.

(3) Remove the spark plugs.

(4) Remove the oil filler cap.

(5) Remove the air cleaner.

(6) Calibrate the tester according to the manufacturer's instructions. The shop air source for testing should maintain 483 kPa (70 psi) minimum, 1,379 kPa (200 psi) maximum and 552 kPa (80 psi) recommended.

(7) Perform the test procedures on each cylinder according to the tester manufacturer's instructions. Set piston of cylinder to be tested at TDC compression,While testing, listen for pressurized air escaping through the throttle body, tailpipe and oil filler cap opening. Check for bubbles in the radiator coolant.

All gauge pressure indications should be equal, with no more than 25% leakage.

FOR EXAMPLE: At 552 kPa (80 psi) input pressure, a minimum of 414 kPa (60 psi) should be maintained in the cylinder.

Refer to CYLINDER COMBUSTION PRESSURE LEAKAGE DIAGNOSIS CHART .

CYLINDER COMBUSTION PRESSURE LEAKAGE DIAGNOSIS CHART

CONDITION	POSSIBLE CAUSE	CORRECTION
AIR ESCAPES THROUGH THROTTLE BODY	Intake valve bent, burnt, or not seated properly	Inspect valve and valve seat. Reface or replace, as necessary. Inspect valve springs. Replace as necessary.
AIR ESCAPES THROUGH TAILPIPE	Exhaust valve bent, burnt, or not seated properly	Inspect valve and valve seat. Reface or replace, as necessary. Inspect valve springs. Replace as necessary.
AIR ESCAPES THROUGH RADIATOR	Head gasket leaking or cracked cylinder head or block	Remove cylinder head and inspect. Replace defective part
MORE THAN 50% LEAKAGE FROM ADJACENT CYLINDERS	Head gasket leaking or crack in cylinder head or block between adjacent cylinders	Remove cylinder head and inspect. Replace gasket, head, or block as necessary
MORE THAN 25% LEAKAGE AND AIR ESCAPES THROUGH OIL FILLER CAP OPENING ONLY	Stuck or broken piston rings; cracked piston; worn rings and/or cylinder wall	Inspect for broken rings or piston. Measure ring gap and cylinder diameter, taper and out-of-round. Replace defective part as necessary

STANDARD PROCEDURE—REPAIR DAMAGED OR WORN THREADS

CAUTION: Be sure that the tapped holes maintain the original center line.

Damaged or worn threads can be repaired. Essentially, this repair consists of:

- Drilling out worn or damaged threads.
- Tapping the hole with a special Heli-Coil Tap, or equivalent.
- Installing an insert into the tapped hole to bring the hole back to its original thread size.

STANDARD PROCEDURE—FORM-IN-PLACE GASKETS & SEALERS

There are numerous places where form-in-place gaskets are used on the engine. Care must be taken when applying form-in-place gaskets to assure obtaining the desired results. **Do not use form-in-place gasket material unless specified.** Bead size, continuity, and location are of great importance. Too

ENGINE 4.7L (Continued)

thin a bead can result in leakage while too much can result in spill-over which can break off and obstruct fluid feed lines. A continuous bead of the proper width is essential to obtain a leak-free gasket.

There are numerous types of form-in-place gasket materials that are used in the engine area. Mopar® Engine RTV GEN II, Mopar® ATF-RTV, and Mopar® Gasket Maker gasket materials, each have different properties and can not be used in place of the other.

MOPAR® ENGINE RTV GEN II

Mopar® Engine RTV GEN II is used to seal components exposed to engine oil. This material is a specially designed black silicone rubber RTV that retains adhesion and sealing properties when exposed to engine oil. Moisture in the air causes the material to cure. This material is available in three ounce tubes and has a shelf life of one year. After one year this material will not properly cure. Always inspect the package for the expiration date before use.

MOPAR® ATF RTV

Mopar® ATF RTV is a specifically designed black silicone rubber RTV that retains adhesion and sealing properties to seal components exposed to automatic transmission fluid, engine coolants, and moisture. This material is available in three ounce tubes and has a shelf life of one year. After one year this material will not properly cure. Always inspect the package for the expiration date before use.

MOPAR® GASKET MAKER

Mopar® Gasket Maker is an anaerobic type gasket material. The material cures in the absence of air when squeezed between two metallic surfaces. It will not cure if left in the uncovered tube. The anaerobic material is for use between two machined surfaces. Do not use on flexible metal flanges.

MOPAR® GASKET SEALANT

Mopar® Gasket Sealant is a slow drying, permanently soft sealer. This material is recommended for sealing threaded fittings and gaskets against leakage of oil and coolant. Can be used on threaded and machined parts under all temperatures. This material is used on engines with multi-layer steel (MLS) cylinder head gaskets. This material also will prevent corrosion. Mopar® Gasket Sealant is available in a 13 oz. aerosol can or 4oz./16 oz. can w/applicator.

FORM-IN-PLACE GASKET AND SEALER APPLICATION

Assembling parts using a form-in-place gasket requires care but it's easier then using precut gaskets.

Mopar® Gasket Maker material should be applied sparingly 1 mm (0.040 in.) diameter or less of sealant to one gasket surface. Be certain the material surrounds each mounting hole. Excess material can easily be wiped off. Components should be torqued in place within 15 minutes. The use of a locating dowel is recommended during assembly to prevent smearing material off the location.

Mopar® Engine RTV GEN II or ATF RTV gasket material should be applied in a continuous bead approximately 3 mm (0.120 in.) in diameter. All mounting holes must be circled. For corner sealing, a 3.17 or 6.35 mm (1/8 or 1/4 in.) drop is placed in the center of the gasket contact area. Uncured sealant may be removed with a shop towel. Components should be torqued in place while the sealant is still wet to the touch (within 10 minutes). The usage of a locating dowel is recommended during assembly to prevent smearing material off the location.

Mopar® Gasket Sealant in an aerosol can should be applied using a thin, even coat sprayed completely over both surfaces to be joined, and both sides of a gasket. Then proceed with assembly. Material in a can w/applicator can be brushed on evenly over the sealing surfaces. Material in an aerosol can should be used on engines with multi-layer steel gaskets.

STANDARD PROCEDURES - ENGINE GASKET SURFACE PREPARATION

To ensure engine gasket sealing, proper surface preparation must be performed, especially with the use of aluminum engine components and multi-layer steel cylinder head gaskets.

Never use the following to clean gasket surfaces:

- Metal scraper
- Abrasive pad or paper to clean cylinder block and head
- High speed power tool with an abrasive pad or a wire brush (Fig. 2)

NOTE: Multi-Layer Steel (MLS) head gaskets require a scratch free sealing surface.

Only use the following for cleaning gasket surfaces:

- Solvent or a commercially available gasket remover
- Plastic or wood scraper (Fig. 2)
- Drill motor with 3M Roloc™ Bristle Disc (white or yellow) (Fig. 2)

CAUTION: Excessive pressure or high RPM (beyond the recommended speed), can damage the sealing surfaces. The mild (white, 120 grit) bristle disc is recommended. If necessary, the medium (yellow, 80 grit) bristle disc may be used on cast iron surfaces with care.

ENGINE 4.7L (Continued)

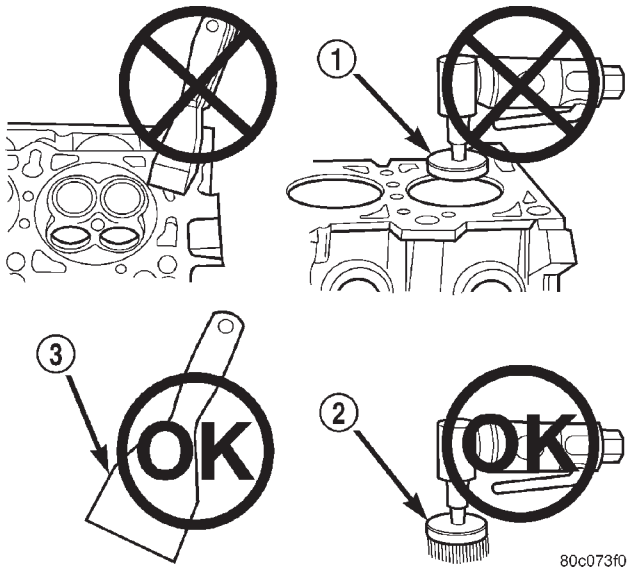

Fig. 2 PROPER TOOL USAGE FOR SURFACE PREPARATION

1 - ABRASIVE PAD
2 - 3M ROLOC™ BRISTLE DISC
3 - PLASTIC/WOOD SCRAPER

STANDARD PROCEDURE - ENGINE CORE AND OIL GALLERY PLUGS

Using a blunt tool such as a drift and a hammer, strike the bottom edge of the cup plug. With the cup plug rotated, grasp firmly with pliers or other suitable tool and remove plug (Fig. 3).

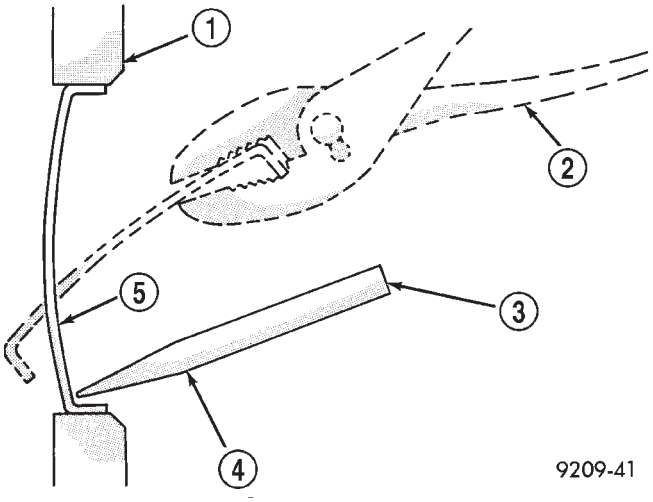

Fig. 3 CORE HOLE PLUG REMOVAL

1 - CYLINDER BLOCK
2 - REMOVE PLUG WITH PLIERS
3 - STRIKE HERE WITH HAMMER
4 - DRIFT PUNCH
5 - CUP PLUG

CAUTION: Do not drive cup plug into the casting as restricted cooling can result and cause serious engine problems.

Thoroughly clean inside of cup plug hole in cylinder block or head. Be sure to remove old sealer. Lightly coat inside of cup plug hole with Mopar® Stud and Bearing Mount. Make certain the new plug is cleaned of all oil or grease. Using proper drive plug, drive plug into hole so that the sharp edge of the plug is at least 0.5 mm (0.020 in.) inside the lead-in chamfer.

It is not necessary to wait for curing of the sealant. The cooling system can be refilled and the vehicle placed in service immediately.

REMOVAL

(1) Disconnect the battery negative cable.
(2) Remove the front fascia.
(3) Raise vehicle on hoist.
(4) Remove exhaust crossover pipe from exhaust manifolds.
(5) Disconnect two ground straps from the lower left hand side and one ground strap from the lower right hand side of the engine.
(6) Disconnect crankshaft position sensor. (Fig. 4)
(7) Remove structural cover (Refer to 9 - ENGINE/ENGINE BLOCK/STRUCTURAL COVER - REMOVAL).
(8) Remove starter. (Refer to 8 - ELECTRICAL/STARTING/STARTER MOTOR - REMOVAL).
(9) Remove rubber splash shield.
(10) Drain cooling system (Refer to 7 - COOLING - STANDARD PROCEDURE).
(11) Remove torque converter bolts.
(12) Remove transmission to engine mounting bolts.
(13) Disconnect the engine block heater power cable from the block heater.
(14) Lower vehicle.
(15) Remove throttle body resonator assembly and inlet hose.
(16) Disconnect throttle and speed control cables.
(17) Disconnect tube from both the left and right side crankcase breathers, then remove the breathers (Fig. 5).
(18) Discharge A/C system (Refer to 24 - HEATING & AIR CONDITIONING/PLUMBING - STANDARD PROCEDURE).
(19) Remove radiator fan (Refer to 7 - COOLING/ENGINE/RADIATOR FAN - REMOVAL) and accessory drive belt (Refer to 7 - COOLING/ACCESSORY DRIVE/DRIVE BELTS - REMOVAL).
(20) Remove A/C compressor (Refer to 24 - HEATING & AIR CONDITIONING/PLUMBING/A/C COMPRESSOR - REMOVAL).

ENGINE 4.7L (Continued)

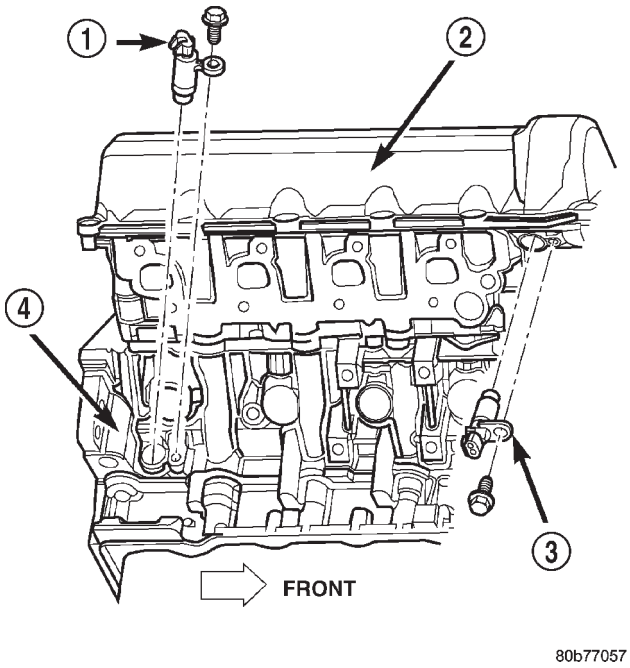

Fig. 4 Crankshaft Position Sensor

1 - CRANKSHAFT POSITION SENSOR
2 - CYLINDER HEAD COVER
3 - CAMSHAFT POSITION SENSOR
4 - RIGHT SIDE CYLINDER BLOCK

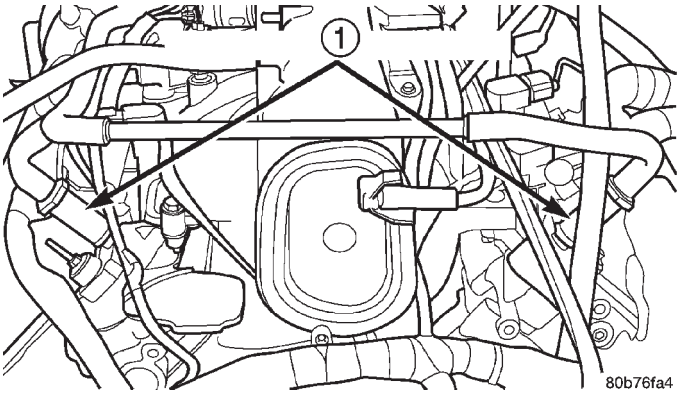

Fig. 5 Crankcase Breather Connection Points

1 - CRANKCASE BREATHERS

(21) Disconnect transmission oil cooler lines at the radiator.

(22) Disconnect radiator lower hose at the thermostat housing.

(23) Remove A/C condenser (Refer to 24 - HEATING & AIR CONDITIONING/PLUMBING/A/C CONDENSER - REMOVAL).

(24) Remove radiator (Refer to 7 - COOLING/ENGINE/RADIATOR - REMOVAL).

(25) Remove generator (Refer to 8 - ELECTRICAL/CHARGING/GENERATOR - REMOVAL).

(26) Disconnect the two heater hoses from the timing chain cover.

(27) Disconnect engine harness at the following points :

- Intake air temperature (IAT) sensor (Fig. 6)
- Fuel Injectors
- Throttle Position (TPS) Switch
- Idle Air Control (IAC) Motor
- Engine Oil Pressure Switch
- Engine Coolant Temperature (ECT) Sensor
- Manifold absolute pressure (MAP) Sensor
- Camshaft Position (CMP) Sensor
- Coil Over Plugs

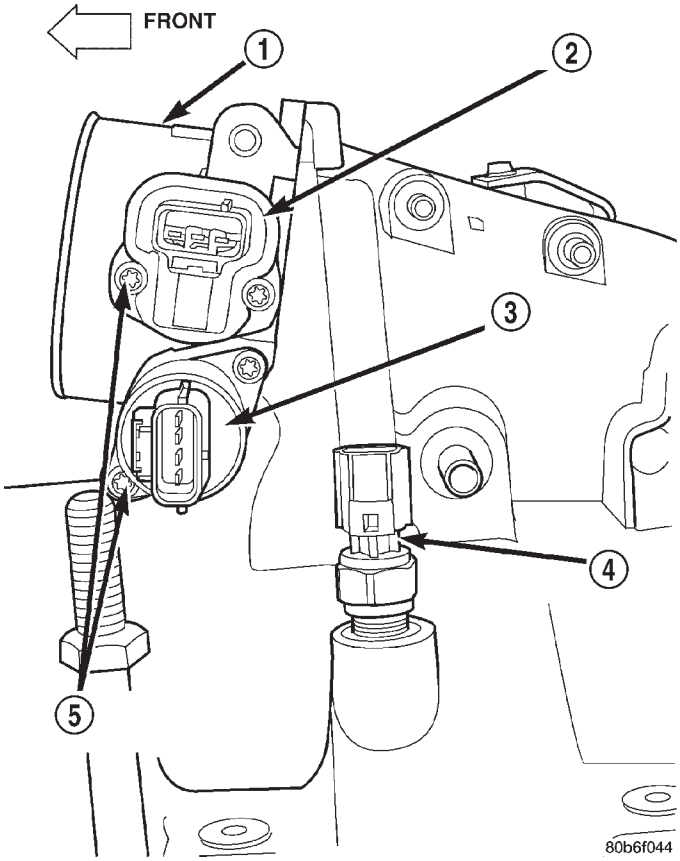

Fig. 6 Throttle Body Connection Points

1 - THROTTLE BODY
2 - TPS
3 - IAC MOTOR
4 - IAT SENSOR
5 - MOUNTING SCREWS

(28) Release fuel rail pressure (Refer to 14 - FUEL SYSTEM/FUEL DELIVERY - STANDARD PROCEDURE) then disconnect the fuel supply quick connect fitting at the fuel rail (Refer to 14 - FUEL SYSTEM/FUEL DELIVERY/QUICK CONNECT FITTING - STANDARD PROCEDURE).

(29) Remove power steering pump and position out of the way.

ENGINE 4.7L (Continued)

(30) Disconnect ground straps from the left side of the engine.

(31) Install Engine Lifting Fixture Special Tool 8347 (Fig. 7)following these steps.

- Holding the lifting fixture at a slight angle, slide the large bore in the front plate over the hex portion of the lifting stud.
- Position the two remaining fixture arms onto the two lifting studs in the cylinder heads.
- Pull foward and upward on the lifting fixture so that the lifting stud rest in the slotted area below the large bore.
- Secure the lifting fixture to the three studs using three 7/16 – 14 N/C locknuts.
- Make sure the lifting loop in the lifting fixture is in the last hole (closest to the throttle body) to minimize the angle of engine during removal.

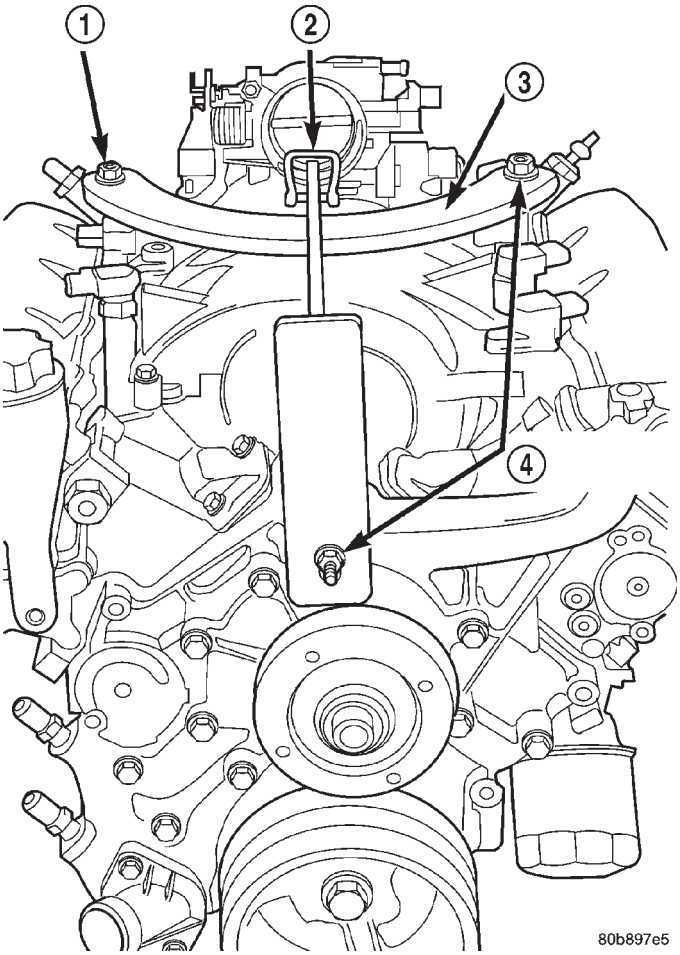

Fig. 7 Engine Lifting Fixture Attachment Locations

1 - ATTACHING LOCATION
2 - ADJUSTABLE HOOK
3 - SPECIAL TOOL 8347 ENGINE LIFT FIXTURE
4 - ATTACHING LOCATIONS

(32) Disconnect body ground strap at the right side cowl.

NOTE: It will be necessary to support the transmission in order to remove the engine.

(33) Position a suitable jack under the transmission.

(34) Remove the engine mount through bolts.

(35) Raise engine slightly, then remove both left and right side engine mounts from engine. (Refer to 9 - ENGINE/ENGINE MOUNTING/FRONT MOUNT - REMOVAL).

(36) Remove engine from the vehicle.

INSTALLATION

(1) Position engine in the vehicle.

(2) Install both left and right side engine mounts onto engine (Refer to 9 - ENGINE/ENGINE MOUNTING/FRONT MOUNT - INSTALLATION).

(3) Install transmission to engine mounting bolts. Tighten the bolts to 41 N·m (30 ft. lbs.).

(4) Remove jack from under the transmission.

(5) Remove engine lifting fixture special tool 8347 (Fig. 7).

(6) Connect ground straps on the left side of the engine.

(7) Install power steering pump (Refer to 19 - STEERING/PUMP - INSTALLATION).

(8) Connect fuel supply line quick connect fitting (Refer to 14 - FUEL SYSTEM/FUEL DELIVERY/ QUICK CONNECT FITTING - STANDARD PROCEDURE).

(9) Connect engine harness at the following points (Fig. 6):

- Intake Air Temperature (IAT) Sensor
- Idle Air Control (IAC) Motor
- Fuel Injectors
- Throttle Position (TPS) Switch
- Engine Oil Pressure Switch
- Engine Coolant Temperature (ECT) Sensor
- Manifold Absolute Pressure (MAP) Sensor
- Camshaft Position (CMP) Sensor
- Coil Over Plugs

(10) Install generator (Refer to 8 - ELECTRICAL/ CHARGING/GENERATOR - INSTALLATION).

(11) Install radiator (Refer to 7 - COOLING/ENGINE/RADIATOR - INSTALLATION).

(12) Install A/C condenser (Refer to 24 - HEATING & AIR CONDITIONING/PLUMBING/A/C CONDENSER - INSTALLATION).

(13) Connect radiator lower hose at the thermostat housing.

(14) Connect the transmission oil cooler lines to the radiator.

(15) Install A/C compressor. (Refer to 24 - HEATING & AIR CONDITIONING/PLUMBING/A/C COMPRESSOR - INSTALLATION).

ENGINE 4.7L (Continued)

(16) Install accessory drive belt (Refer to 7 - COOLING/ACCESSORY DRIVE/DRIVE BELTS - INSTALLATION) and radiator fan (Refer to 7 - COOLING/ENGINE/RADIATOR FAN - INSTALLATION).
(17) Install breathers, then connect tube to both crankcase breathers (Fig. 5).
(18) Connect throttle and speed control cables.
(19) Install throttle body resonator assembly and inlet hose.
(20) Raise vehicle.
(21) Connect two ground straps on the lower left hand side of the engine and one ground strap on the lower right side.
(22) Install torque converter bolts.
(23) Connect crankshaft position sensor (Fig. 4).
(24) Install starter.
(25) Install rubber splash shield.

CAUTION: The structural cover requires a specific torque sequence. Failure to follow this sequence may cause severe damage to the cover.

(26) Install structural cover (Refer to 9 - ENGINE/ENGINE BLOCK/STRUCTURAL COVER - INSTALLATION).
(27) Install exhaust crossover pipe.
(28) Install engine block heater power cable, If equipped.
(29) Lower vehicle.
(30) Check and fill engine oil (Refer to LUBRICATION & MAINTENANCE/FLUID TYPES - SPECIFICATIONS).
(31) Recharge the A/C system (Refer to 24 - HEATING & AIR CONDITIONING/PLUMBING - STANDARD PROCEDURE).
(32) Refill the engine cooling system (Refer to 7 - COOLING - STANDARD PROCEDURE).
(33) Connect the battery negative cable.
(34) Start engine and check for leaks.

SPECIFICATIONS

4.7L ENGINE

DESCRIPTION	SPECIFICATION
GENERAL SPECIFICATIONS	
Engine Type	90° SOHC V-8 16-Valve
Displacement	4.7 Liters / 4701cc (287 Cubic Inches)
Bore	93.0 mm (3.66 in.)
Stroke	86.5 mm (3.40 in.)
Compression Ratio	9.0:1
Horsepower	235 BHP @ 4800 RPM
Torque	295 LB-FT @ 3200 RPM
Lead Cylinder	#1 Left Bank
Firing Order	1-8-4-3-6-5-7-2
CYLINDER BLOCK	
Cylinder Block	Cast Iron
Bore Diameter	93.010 ± .0075 mm (3.6619 ± 0.0003 in.)
Out of Round (MAX)	0.076 mm (0.003 in.)
Taper (MAX)	0.051 mm (0.002 in.)
PISTONS	
Material	Aluminum Alloy
Diameter	92.975 mm (3.6605 in.)
Weight	367.5 grams (12.96 oz)
Ring Groove Diameter	
No. 1	83.73 - 83.97 mm (3.296 - 3.269 in.)
No. 2	82.833 - 83.033 mm (3.261 - 3.310 in.)
No. 3	83.88 - 84.08 mm (3.302 - 3.310 in.)
PISTON PINS	
Type	Pressed Fit
Clearance In Piston	0.010 - 0.019 mm (0.0004 - 0.0008 in.)
Diameter	24.013 - 24.016 mm (0.9454 - 0.9456 in.)
PISTON RINGS	
Ring Gap	
Top Compression Ring	0.37 - 0.63 mm (0.0146 - 0.0249 in.)
Second Compression Ring	0.37 - 0.63 mm (0.0146 - 0.0249 in.)
Oil Control (Steel Rails)	0.25 - 0.76 mm (0.0099 - 0.30 in.)

SPECIFICATIONS (Continued)

DESCRIPTION	SPECIFICATION
Side Clearance	
Top Compression Ring	.051 - .094 mm (0.0020 - 0.0037 in.)
Second Compression Ring	0.040 - 0.080 mm (0.0016 - 0.0031 in.)
Oil Ring (Steel Ring)	.019 - .229 mm (.0007 - .0091 in.)
Ring Width	
Top Compression Ring	1.472 - 1.490 mm (0.057 - 0.058 in.)
Second Compression Ring	1.472 - 1.490 mm (0.057 - 0.058 in.)
Oil Ring (Steel Rails)	0.445 - 0.470 mm (0.017 - 0.018 in.)
CONNECTING RODS	
Bearing Clearance	0.010 - 0.048 mm (0.0004 - 0.0019 in.)
Side Clearance	0.10 - 0.35 mm (0.004 - 0.0138 in.)
Piston Pin Bore Diameter (Interference Fit)	.022 - .045 mm (0.0009 - 0.0018 in.)
Bearing Bore Out of Round (MAX)	0.004 mm (0.0002 in.)
Total Weight (Less Bearing)	555 grams (19.5771 ounces)
CRANKSHAFT	
Main Bearing Journal	
Diameter	63.488 - 63.512 mm (2.4996 - 2.5005 in.)
Bearing Clearance	0.018 - 0.052 mm (0.0008 - 0.0021 in.)
Out of Round (MAX)	0.005 mm (0.0002 in.)
Taper (MAX)	0.008 mm (0.0004 in.)
End Play	0.052 - 0.282 mm (0.0021 - 0.0112 in.)
End Play (MAX)	0.282 mm (0.0112 in)

DESCRIPTION	SPECIFICATION
Connecting Rod Journal	
Diameter	50.992 - 51.008 mm (2.0076 - 2.0082 in.)
Bearing Clearance	0.015 - 0.055 mm (0.0006 -0.0022 in.)
Out of Round (MAX)	0.005 mm (0.0002 in.)
Taper (MAX)	0.008 mm (0.0004 in.)
CAMSHAFT	
Bore Diameter	26.02 - 26.04 mm (1.0245 - 1.0252 in.)
Bearing Journal Diameter	25.975 - 25.995 mm (1.0227 - 1.0235 in.)
Bearing Clearance	0.025 - 0.065 mm (0.001 - 0.0026 in.)
Bearing Clearance (MAX)	0.065 mm (0.0026 in.)
End Play	.075 - .200 mm (0.003 - 0.0079 in.)
End Play (MAX)	.200 mm (0.0079 in.)
VALVE TIMING	
Intake	
Opens (ATDC)	3.6°
Closes (ATDC)	247.1°
Duration	243.5°
Exhaust	
Opens (BTDC)	232.5°
Closes (ATDC)	21.2°
Duration	253.70°
Valve Overlap	17.6°
VALVES	
Face Angle	45° - 45.5°
Head Diameter	
Intake	48.52 - 48.78 mm (1.9103 - 1.9205 in.)
Exhaust	36.87 - 37.13 mm 1.4516 - 1.4618 in.)

SPECIFICATIONS (Continued)

DESCRIPTION	SPECIFICATION
Length (Overall)	
Intake	113.45 - 114.21 mm (4.4666 - 4.4965)
Exhaust	114.92 - 115.68 mm (4.5244 - 4.5543 in.)
Stem Diameter	
Intake	6.931 - 6.957 mm (0.2729 - 0.2739 in.)
Exhaust	6.902 - 6.928 mm (0.2717 - 0.2728 in.)
Stem - to - Guide Clearance	
Intake	.018 - .069 mm (0.0008 - 0.0028 in.)
Exhaust	.047 - .098 mm (0.0019 - 0.0039 in.)
Max. Allowable Stem - to - Guide Clearance (Rocking Method)	
Intake	0.069 mm (0.0028 in.)
Exhaust	0.098 mm (0.0039 in.)
Valve Lift (Zero Lash)	
Intake	11.25 mm (0.443 in.)
Exhaust	10.90 mm (0.4292 in.)
VALVE SPRING	
Free Length (Approx)	
Intake and Exhaust	48.6 mm (1.9134 in.)
Spring Force (Valve Closed)	
Intake and Exhaust	315.5 - 352.5 N @ 40.89 mm (70.92722 - 79.24515 lbs. @ 1.6099 in.)
Spring Force (Valve Open)	
Intake and Exhaust	786.0 - 860.0 N @ 29.64 mm 176.6998 - 193.3357 lbs. @ 1.167 in.)
Number of Coils	
Intake and Exhaust	6.69

DESCRIPTION	SPECIFICATION
Wire Diameter	
Intake and Exhaust	4.2799 - 4.3561 mm (0.1685 - 0.1715 in.)
Installed Height (Spring Seat to Bottom of Retainer)	
Nominal	
Intake	40.97 mm (1.613 in.)
Exhaust	40.81 mm (1.606 in.)
CYLINDER HEAD	
Gasket Thickness (Compressed)	.7 mm (0.0276 in.)
Valve Seat Angle	44.5° - 45.0°
Valve Seat Runout (MAX)	0.051 mm (0.002 in.)
Valve Seat Width	
Intake	1.75 - 2.36 mm (0.0698 - 0.0928 in.)
Exhaust	1.71 - 2.32 mm (0.0673 - 0.0911 in.)
Guide Bore Diameter (Std.)	6.975 - 7.00 mm (0.2747 - 0.2756 in.)
Cylinder Head Warpage (Flatness)	0.0508 mm (0.002 in.)
OIL PUMP	
Clearance Over Rotors (MAX)	.035 - .095 mm (0.0014 - 0.0038 in.)
Cover Out - of -Flat (MAX)	.025 mm (0.001 in.)
Inner and Outer Rotor Thickness	12.08 mm (0.4756 in.)
Outer Rotor Clearance (MAX)	85.96 mm (3.3843 in.)
Outer Rotor Diameter (MIN)	85.925 mm (0.400 in.)
Tip Clearance Between Rotors (MAX)	.150 mm (0.006 in.)

SPECIFICATIONS (Continued)

DESCRIPTION	SPECIFICATION
OIL PRESSURE	
At Curb Idle Speed (MIN)*	25 kPa (4 psi)
@ 3000 rpm	170 - 550 kPa (25 - 80 psi)
*** CAUTION: If pressure is zero at curb idle, DO NOT run engine at 3000 rpm.**	

TORQUE

DESCRIPTION	N·m	Ft. Lbs.	In. Lbs.
Camshaft			
Non - Oiled Sprocket Bolt	122	90	—
Bearing Cap Bolts	11	—	100
Timing Chain Cover—Bolts	54	40	—
Connecting Rod Cap—Bolts	27	20	—
	PLUS 90° TURN		
Bed Plate—Bolts	Refer to Procedure		
Crankshaft Damper—Bolt	175	130	—
Cylinder Head—Bolts			
M11 Bolts	81	60	—
M8 Bolts	26	19	—
Cylinder Head Cover—Bolts	12	—	105
Exhaust Manifold—Bolts	25	18	—
Exhaust Manifold Heat Shield—Nuts	8	—	72
	Then loosen 45°		
Flexplate—Bolts	60	45	—
Engine Mount Bracket to Block—Bolts	61	45	—
Rear Mount to Transmission—Bolts	46	34	—
Generator Mounting—Bolts			
M10 Bolts	54	40	—
M8 Bolts	28	—	250
Intake Manifold—Bolts	12	—	105
	Refer to Procedure for Tightening Sequence		
Oil Pan—Bolts	15	—	130

DESCRIPTION	N·m	Ft. Lbs.	In. Lbs.
Oil Pan—Drain Plug	34	25	—
Oil Pump—Bolts	28	—	250
Oil Pump Cover—Bolts	12	—	105
Oil Pickup Tube—Bolt and Nut	28	—	250
Oil Dipstick Tube to Engine Block—Bolt	15	—	130
Oil Fill Tube—Bolts	12	—	105
Timing Chain Guide—Bolts	28	—	250
Timing Chain Tensioner Arm—Special Pin Bolt	17	—	150
Hydraulic Tensioner—Bolts	28	—	250
Timing Chain Primary Tensioner—Bolts	28	—	250
Timing Drive Idler Sprocket—Bolt	34	25	—
Thermostat Housing—Bolts	13	—	115
Water Pump—Bolts	54	40	—

SPECIAL TOOLS

4.7L ENGINE

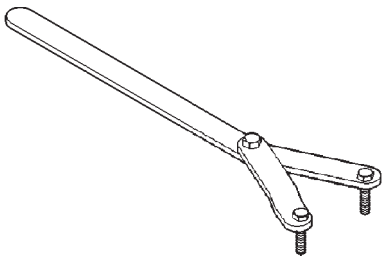

Spanner Wrench 6958

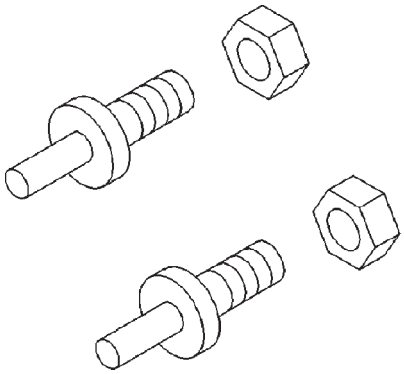

Adapter Pins 8346

SPECIAL TOOLS (Continued)

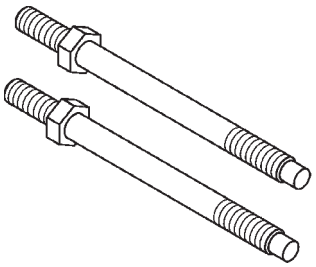

Engine Lifting Studs 8400

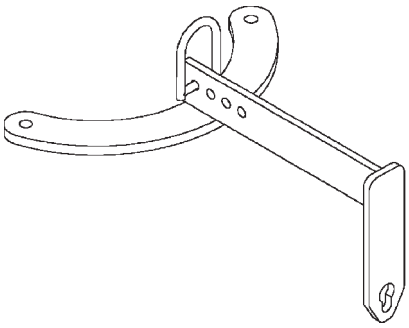

Engine Lift Fixture 8347

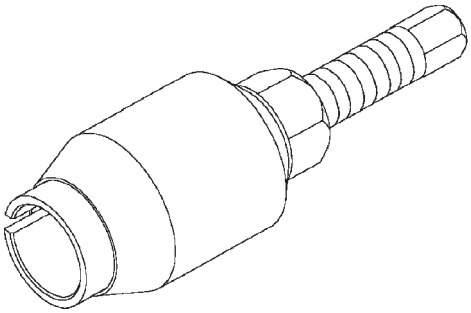

Front Crankshaft Seal Remover 8511

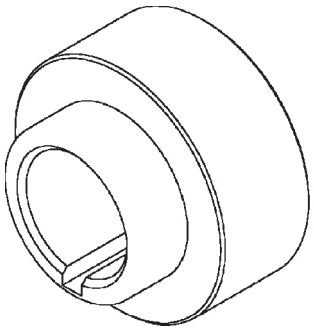

Front Crankshaft Seal Installer 8348

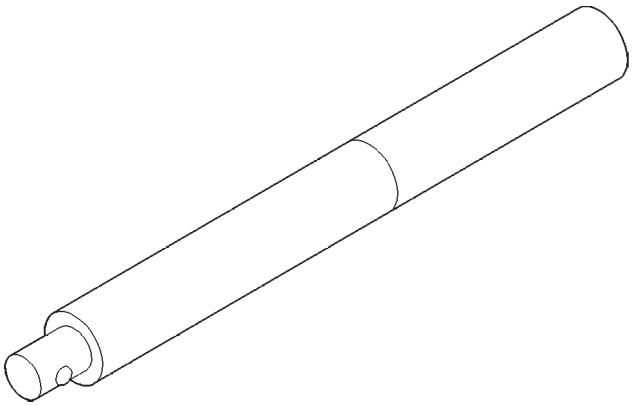

Handle C-4171

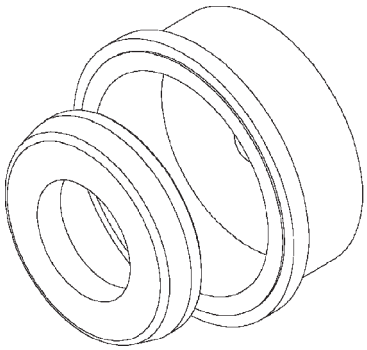

Rear Crankshaft Seal Installer 8349

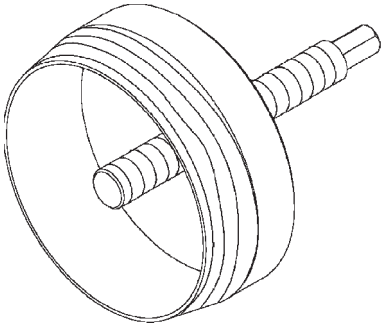

Rear Crankshaft Seal Remover 8506

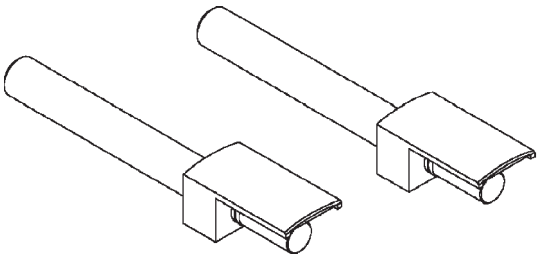

Connecting Rod Guides 8507

SPECIAL TOOLS (Continued)

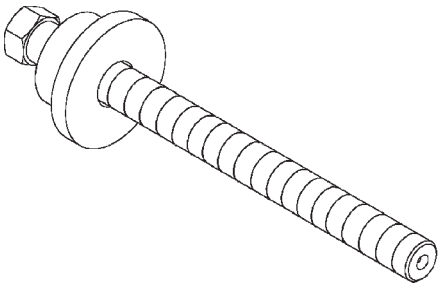

Crankshaft Damper Installer 8512

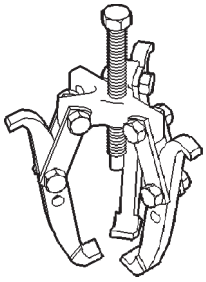

Puller 1026

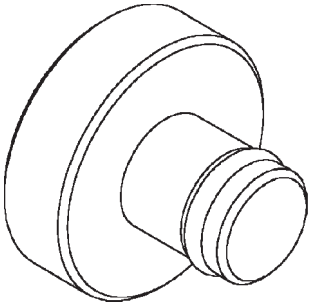

Crankshaft Damper Removal Insert 8513

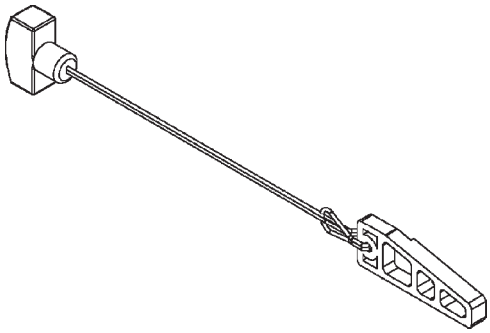

Chain Tensioner

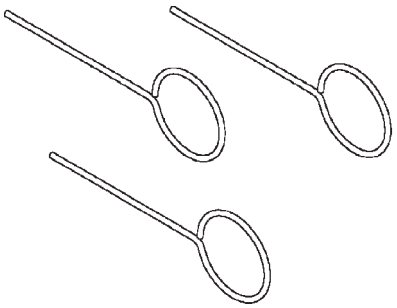

Chain Tensioner Pins 8514

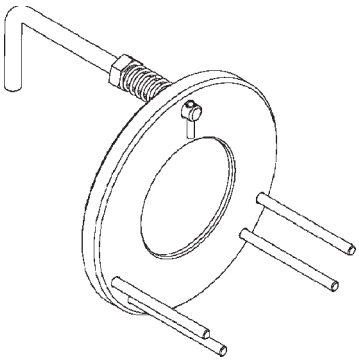

Secondary Chain Holder 8515

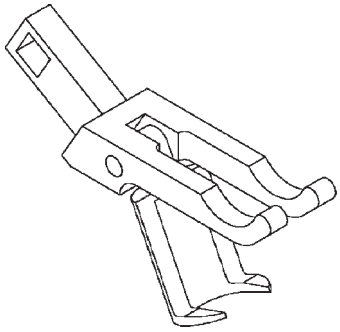

Remover, Rocker Arm 8516

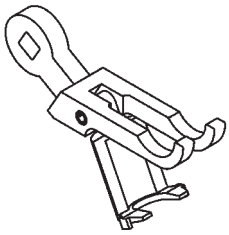

Valve Spring Compressor 8387

SPECIAL TOOLS (Continued)

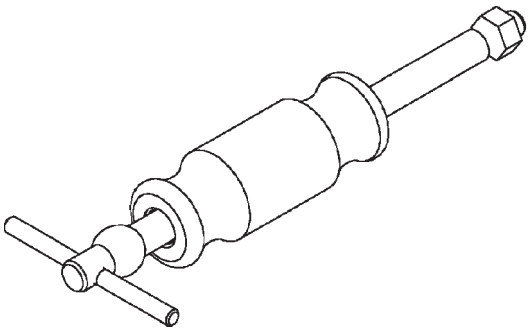

Idler Shaft Remover 8517

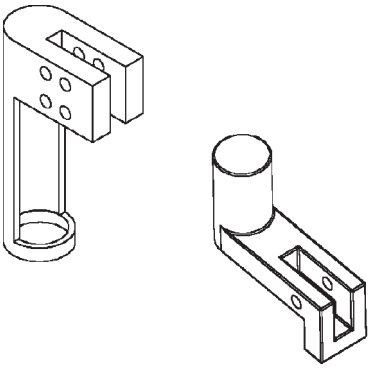

Valve Spring Compressor Adapters 8519

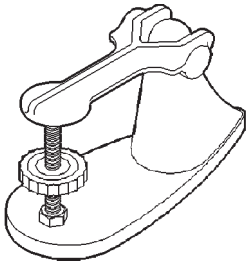

Valve Spring Tester C-647

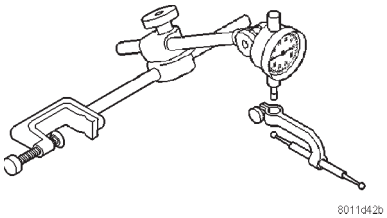

Dial Indicator C-3339

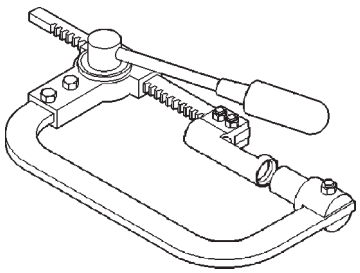

Valve Spring Compressor C-3422-B

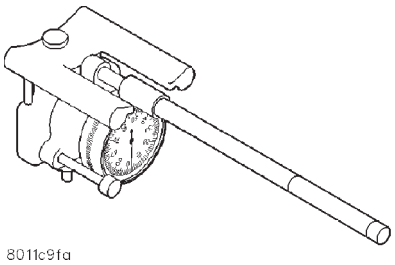

Bore Size Indicator C-119

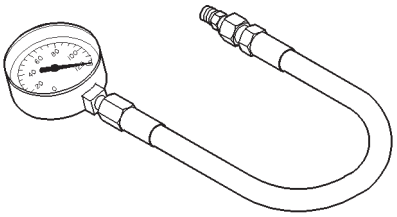

Oil Pressure Gauge C-3292

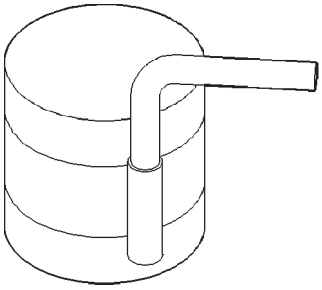

Piston Ring Compressor C-385

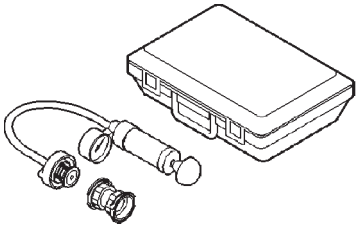

Pressure Tester Kit 7700

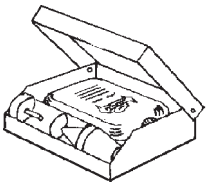

Bloc–Chek–Kit C-3685–A

AIR CLEANER ELEMENT

REMOVAL - 4.7L

(1) Unlatch four clips retaining air cleaner cover to air cleaner housing (Fig. 8).

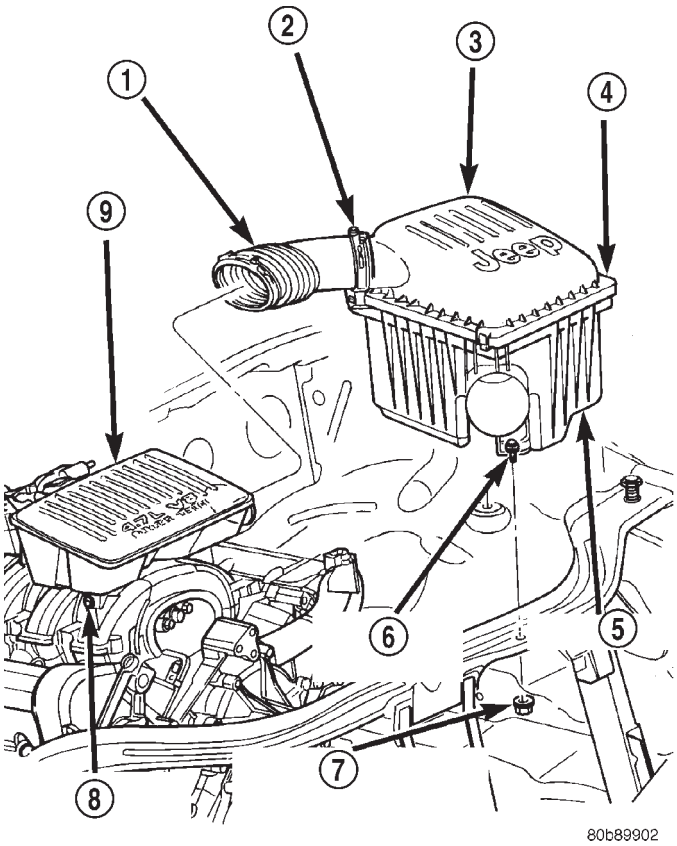

Fig. 8 Air Cleaner Assembly - 4.7L

1 - AIR DUCT
2 - CLAMPS
3 - AIR CLEANER COVER
4 - CLIPS
5 - HOUSING
6 - HOUSING BOLTS (3)
7 - LOWER HOUSING NUTS (3)
8 - RESONATOR BOLTS
9 - RESONATOR

(2) Lift cover up and position to the side.
(3) Remove air cleaner element.

INSTALLATION - 4.7L

(1) Clean inside of air cleaner housing before installing new element.
(2) Install air cleaner element into housing.
(3) Latch clips and clamp cover down to secure. Be sure air cleaner cover is properly seated to air cleaner housing.

AIR CLEANER HOUSING

REMOVAL - 4.7L

(1) Disconnect air cleaner cover-to-air duct clamp (Fig. 8).
(2) Disconnect air duct at housing.
(3) **Each of the 3 air cleaner housing mounting bolts is attached with 2 nuts (an upper nut and lower nut). DO NOT REMOVE BOLTS. To prevent stripping bolts, only remove lower nuts. The lower housing nuts are located under left front inner fender (Fig. 8).**
(a) To gain access to lower nuts, raise vehicle.
(b) Remove clips retaining rubber inner fender shield.
(c) Pry back shield enough to gain access to lower nuts.
(d) Remove 3 nuts.
(e) Remove air cleaner assembly from vehicle.
(4) If resonator is to be removed, disconnect breather tube at resonator, disconnect air duct clamp at resonator (Fig. 8)and remove 2 resonator mounting bolts (at sides of resonator). Remove resonator from throttle body by loosening clamp at throttle body.

INSTALLATION - 4.7L

(1) Position air cleaner assembly to body and install 3 nuts. Tighten nuts to 10 N·m (93 in. lbs.) torque. **To prevent excessive vibration transmitted through housing, the nuts must be properly torqued. Do not overtighten nuts.**
(2) If resonator was removed: Install resonator and bolts. Tighten bolts to 4 N·m (35 in. lbs.) torque. Tighten clamp at throttle body to 4 N·m (35 in. lbs.) torque.
(3) Position fender liner and install clips.
(4) Connect air duct at housing (Fig. 8).
(5) Tighten air duct clamp.

CYLINDER HEAD - LEFT

DESCRIPTION—CYLINDER HEAD

The cylinder heads are made of an aluminum alloy. The cylinder head features two valves per cylinder with pressed in powdered metal valve guides. The cylinder heads also provide enclosures for the timing chain drain, necessitating unique left and right cylinder heads.

DESCRIPTION—VALVE GUIDES

The valve guides are made of powered metal and are pressed into the cylinder head. The guides are not replaceable or serviceable, and valve guide ream-

CYLINDER HEAD - LEFT (Continued)

ing is not recommended. If the guides are worn beyond acceptable limits, replace the cylinder heads.

DIAGNOSIS AND TESTING—HYDRAULIC LASH ADJUSTER NOISE DIAGNOSIS

A tappet-like noise may be produced from several items. Check the following items.

(1) Engine oil level too high or too low. This may cause aerated oil to enter the adjusters and cause them to be spongy.

(2) Insufficient running time after rebuilding cylinder head. Low speed running up to 1 hour may be required.

(3) Turn engine off and let set for a few minutes before restarting. Repeat this several times after engine has reached normal operating temperature.

(4) Low oil pressure.

(5) The oil restrictor in cylinder head gasket or the oil passage to the cylinder head is plugged with debris.

(6) Air ingested into oil due to broken or cracked oil pump pick up.

(7) Worn valve guides.

(8) Rocker arm ears contacting valve spring retainer.

(9) Rocker arm loose, adjuster stuck or at maximum extension and still leaves lash in the system.

(10) Faulty lash adjuster.

- Check lash adjusters for sponginess while installed in cylinder head and cam on camshaft at base circle. Depress part of rocker arm over adjuster. Normal adjusters should feel very firm. Spongy adjusters can be bottomed out easily.
- Remove suspected lash adjusters, and replace.
- Before installation, make sure adjusters are at least partially full of oil. This can be verified by little or no plunger travel when lash adjuster is depressed.

DIAGNOSIS AND TESTING—CYLINDER HEAD GASKET

A cylinder head gasket leak can be located between adjacent cylinders or between a cylinder and the adjacent water jacket.

Possible indications of the cylinder head gasket leaking between adjacent cylinders are:

- Loss of engine power
- Engine misfiring
- Poor fuel economy

Possible indications of the cylinder head gasket leaking between a cylinder and an adjacent water jacket are:

- Engine overheating
- Loss of coolant
- Excessive steam (white smoke) emitting from exhaust
- Coolant foaming

CYLINDER-TO-CYLINDER LEAKAGE TEST

To determine if an engine cylinder head gasket is leaking between adjacent cylinders, follow the procedures in Cylinder Compression Pressure Test (Refer to 9 - ENGINE - DIAGNOSIS AND TESTING). An engine cylinder head gasket leaking between adjacent cylinders will result in approximately a 50–70% reduction in compression pressure.

CYLINDER-TO-WATER JACKET LEAKAGE TEST

WARNING: USE EXTREME CAUTION WHEN THE ENGINE IS OPERATING WITH COOLANT PRESSURE CAP REMOVED.

VISUAL TEST METHOD

With the engine cool, remove the coolant pressure cap. Start the engine and allow it to warm up until thermostat opens.

If a large combustion/compression pressure leak exists, bubbles will be visible in the coolant.

COOLING SYSTEM TESTER METHOD

WARNING: WITH COOLING SYSTEM TESTER IN PLACE, PRESSURE WILL BUILD UP FAST. EXCESSIVE PRESSURE BUILT UP, BY CONTINUOUS ENGINE OPERATION, MUST BE RELEASED TO A SAFE PRESSURE POINT. NEVER PERMIT PRESSURE TO EXCEED 138 kPa (20 psi).

Install Cooling System Tester 7700 or equivalent to pressure cap neck. Start the engine and observe the tester's pressure gauge. If gauge pulsates with every power stroke of a cylinder a combustion pressure leak is evident.

CHEMICAL TEST METHOD

Combustion leaks into the cooling system can also be checked by using Bloc-Chek Kit C-3685-A or equivalent. Perform test following the procedures supplied with the tool kit.

REMOVAL

(1) Disconnect the negative cable from the battery.

(2) Raise the vehicle on a hoist.

(3) Disconnect the exhaust pipe at the left side exhaust manifold.

(4) Drain the engine coolant. (Refer to 7 - COOLING - STANDARD PROCEDURE).

(5) Lower the vehicle.

(6) Remove the intake manifold. (Refer to 9 - ENGINE/MANIFOLDS/INTAKE MANIFOLD - REMOVAL).

CYLINDER HEAD - LEFT (Continued)

(7) Remove the cylinder head cover. (Refer to 9 - ENGINE/CYLINDER HEAD/CYLINDER HEAD COVER(S) - REMOVAL).

(8) Remove accessory drive belt. (Refer to 7 - COOLING/ACCESSORY DRIVE/DRIVE BELTS - REMOVAL).

(9) Remove the power steering pump and set aside.

(10) Rotate the crankshaft until the damper timing mark is aligned with TDC indicator mark (Fig. 9).

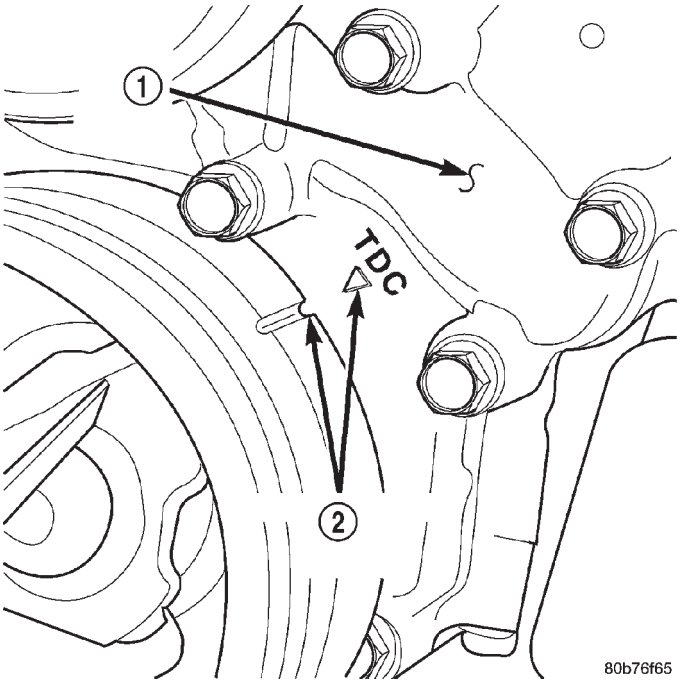

Fig. 9 Engine Top Dead Center

1 - TIMING CHAIN COVER
2 - CRANKSHAFT TIMING MARKS

(11) Verify the V8 mark on the camshaft sprocket is at the 12 o'clock position (Fig. 11). Rotate the crankshaft one turn if necessary.

(12) Remove the crankshaft damper. (Refer to 9 - ENGINE/ENGINE BLOCK/VIBRATION DAMPER - REMOVAL).

(13) Remove the timing chain cover. (Refer to 9 - ENGINE/VALVE TIMING/TIMING BELT / CHAIN COVER(S) - REMOVAL).

(14) Lock the secondary timing chains to the idler sprocket using Special Tool 8515 (Fig. 10).

NOTE: Mark the secondary timing chain prior to removal to aid in installation.

(15) Mark the secondary timing chain, one link on each side of the V8 mark on the camshaft drive gear (Fig. 11).

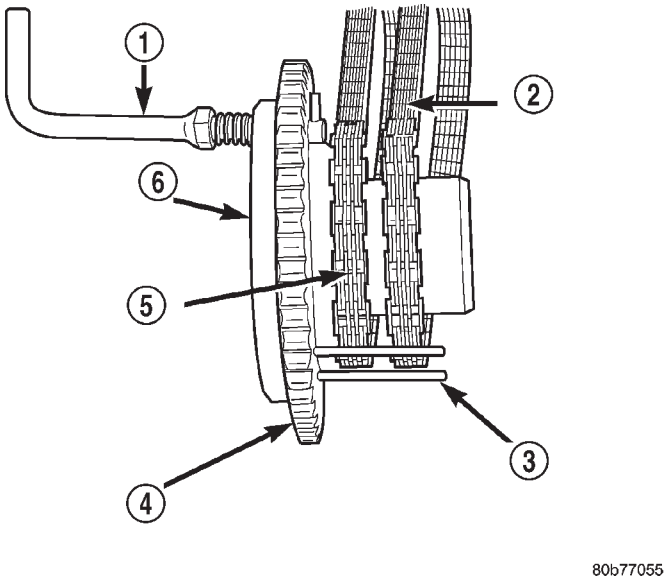

Fig. 10 Using Special Tool 8515 to Hold Chains to Idler Sprocket.

1 - LOCK ARM
2 - RIGHT CAMSHAFT CHAIN
3 - SECONDARY CHAINS RETAINING PINS (4)
4 - IDLER SPROCKET
5 - LEFT CAMSHAFT CHAIN
6 - SPECIAL TOOL 8515

(16) Remove the left side secondary chain tensioner. (Refer to 9 - ENGINE/VALVE TIMING/TIMING BELT/CHAIN AND SPROCKETS - REMOVAL).

(17) Remove the cylinder head access plug (Fig. 12).

(18) Remove the left side secondary chain guide. (Refer to 9 - ENGINE/VALVE TIMING/TIMING BELT/CHAIN AND SPROCKETS - REMOVAL).

(19) Remove the retaining bolt and the camshaft drive gear.

CAUTION: Do not allow the engine to rotate. Severe damage to the valve train can occur.

CAUTION: Do not overlook the four smaller bolts at the front of the cylinder head. Do not attempt to remove the cylinder head without removing these four bolts.

NOTE: The cylinder head is attached to the cylinder block with fourteen bolts.

(20) Remove the cylinder head retaining bolts.

(21) Remove the cylinder head and gasket. Discard the gasket.

CYLINDER HEAD - LEFT (Continued)

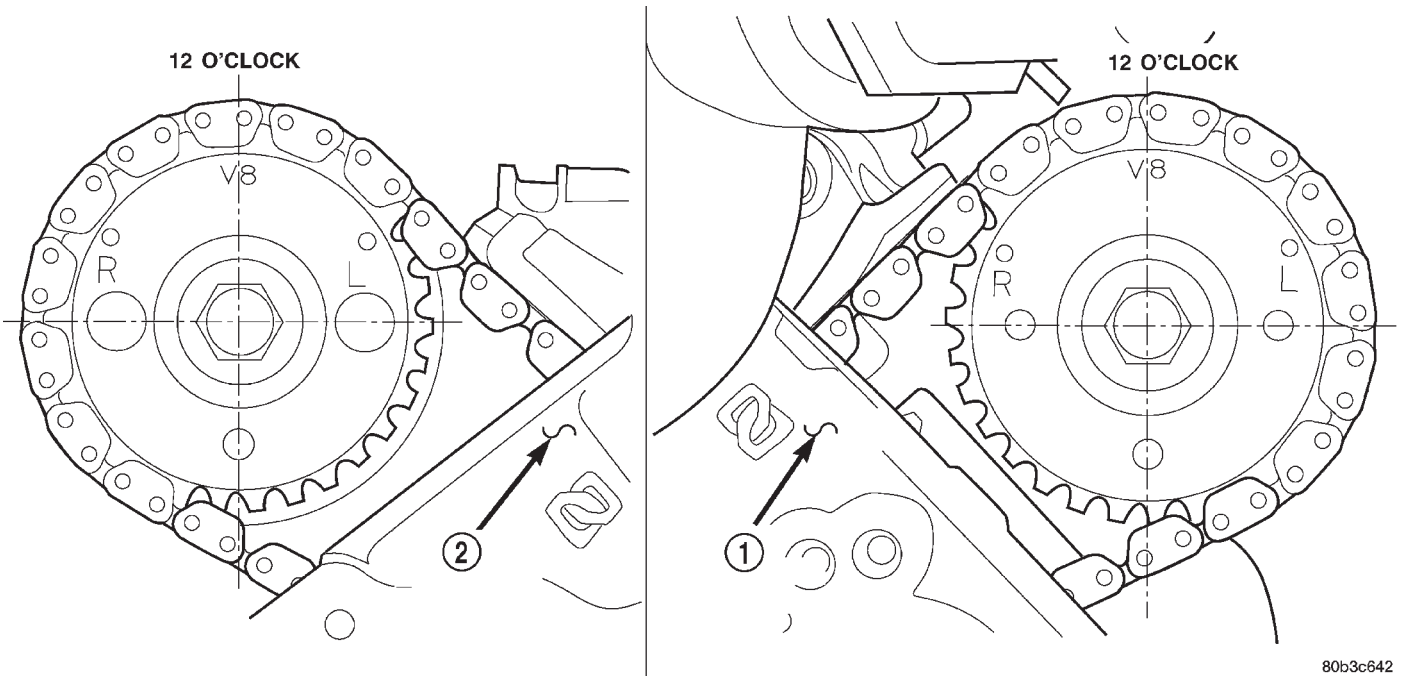

Fig. 11 Camshaft Sprocket V8 Marks

1 - LEFT CYLINDER HEAD
2 - RIGHT CYLINDER HEAD

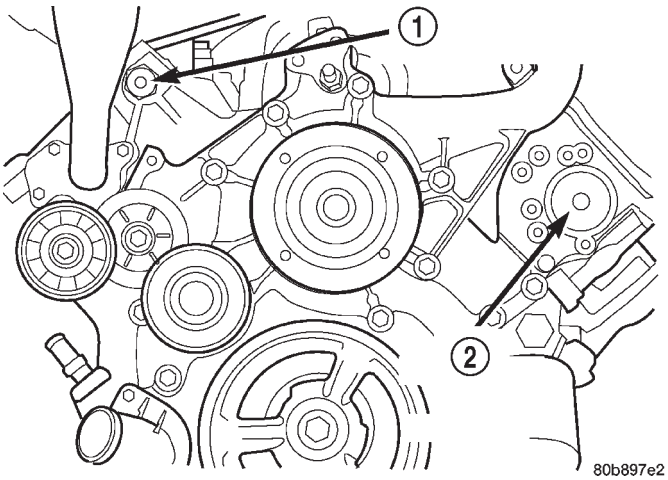

Fig. 12 Cylinder Head Access Plugs

1 - RIGHT CYLINDER HEAD ACCESS PLUG
2 - LEFT CYLINDER HEAD ACCESS PLUG

CAUTION: Do not lay the cylinder head on its gasket sealing surface, due to the design of the cylinder head gasket any distortion to the cylinder head sealing surface may prevent the gasket from properly sealing resulting in leaks.

CLEANING

To ensure engine gasket sealing, proper surface preparation must be performed, especially with the use of aluminum engine components. (Refer to 9 - ENGINE - STANDARD PROCEDURE)

INSPECTION

(1) Inspect the cylinder head for out-of-flatness, using a straightedge and a feeler gauge. If tolerances exceed 0.0508 mm (0.002 in.) replace the cylinder head.

(2) Inspect the valve seats for damage. Service the valve seats as necessary.

(3) Inspect the valve guides for wear, cracks or looseness. If either condition exist, replace the cylinder head.

INSTALLATION

NOTE: The cylinder head bolts are tightened using a torque plus angle procedure. The bolts must be examined BEFORE reuse. If the threads are necked down the bolts should be replaced.

Necking can be checked by holding a straight edge against the threads. If all the threads do not contact the scale, the bolt should be replaced (Fig. 13).

CYLINDER HEAD - LEFT (Continued)

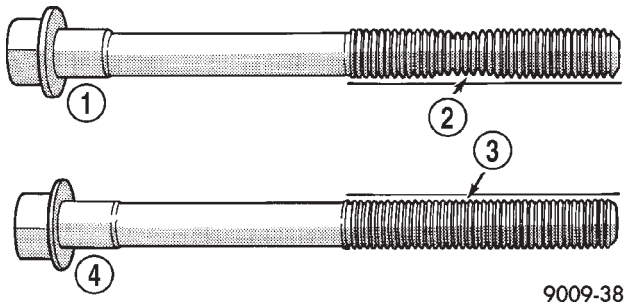

Fig. 13 Checking Cylinder Head Bolts for Stretching (Necking)

1 - STRETCHED BOLT
2 - THREADS ARE NOT STRAIGHT ON LINE
3 - THREADS ARE STRAIGHT ON LINE
4 - UNSTRETCHED BOLT

CAUTION: When cleaning cylinder head and cylinder block surfaces, DO NOT use a metal scraper because the surfaces could be cut or ground. Use only a wooden or plastic scraper.

(1) Clean the cylinder head and cylinder block mating surfaces (Refer to 9 - ENGINE - STANDARD PROCEDURE).

(2) Position the new cylinder head gasket on the locating dowels.

CAUTION: When installing cylinder head, use care not damage the tensioner arm or the guide arm.

(3) Position the cylinder head onto the cylinder block. Make sure the cylinder head seats fully over the locating dowels.

NOTE: The four smaller cylinder head mounting bolts require sealant to be added to them before installing. Failure to do so may cause leaks.

(4) Lubricate the cylinder head bolt threads with clean engine oil and install the ten M11 bolts.

(5) Coat the four M8 cylinder head bolts with **Mopar® Lock and Seal Adhesive** then install the bolts.

NOTE: The cylinder head bolts are tightened using an angle torque procedure, however, the bolts are not a torque-to-yield design.

(6) Tighten the bolts in sequence (Fig. 14) using the following steps and torque values:

- Step 1: Tighten bolts 1–10, 20 N·m (15 ft. lbs.).
- Step 2: Tighten bolts 1–10, 47 N·m (35 ft. lbs.). Tighten bolts 11–14, 25 N·m (18 ft. lbs.).
- Step 3: Tighten bolts 1–10, 90 degrees. Tighten bolts 11–14, 26 N·m (19 ft. lbs.).

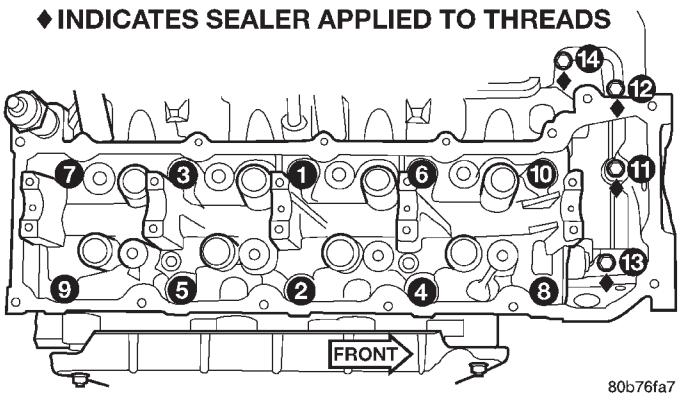

Fig. 14 Cylinder Head Tightening Sequence

(7) Install the secondary chain and secondary chain guide (Refer to 9 - ENGINE/VALVE TIMING/ TIMING BELT/CHAIN AND SPROCKETS - INSTALLATION).

(8) Install the cylinder head access plug.

(9) Re-set and Install the left side secondary chain tensioner (Refer to 9 - ENGINE/VALVE TIMING/ TIMING BELT/CHAIN AND SPROCKETS - INSTALLATION).

(10) Remove Special Tool 8515.

(11) Install the timing chain cover (Refer to 9 - ENGINE/VALVE TIMING/TIMING BELT / CHAIN COVER(S) - INSTALLATION).

(12) Install the crankshaft damper (Refer to 9 - ENGINE/ENGINE BLOCK/VIBRATION DAMPER - INSTALLATION).

(13) Install the power steering pump.

(14) Install the cylinder head cover (Refer to 9 - ENGINE/CYLINDER HEAD/CYLINDER HEAD COVER(S) - INSTALLATION).

(15) Install the intake manifold (Refer to 9 - ENGINE/MANIFOLDS/INTAKE MANIFOLD - INSTALLATION).

(16) Refill the cooling system (Refer to 7 - COOLING - STANDARD PROCEDURE).

(17) Raise the vehicle.

(18) Install the exhaust pipe onto the left exhaust manifold.

(19) Lower the vehicle.

(20) Connect the negative cable to the battery.

(21) Start the engine and check for leaks.

CAMSHAFT(S) - LEFT

DESCRIPTION

The camshafts consist of powdered metal steel lobes which are sinter-bonded to a steel tube. A steel post or nose piece is friction-welded to the steel camshaft tube. Five bearing journals are machined into the camshaft, four on the steel tube and one on the steel nose piece. Camshaft end play is controlled by two thrust walls that border the nose piece journal. Engine oil enters the hollow camshafts at the third journal and lubricates every intake lobe rocker through a drilled passage in the intake lobe.

REMOVAL

CAUTION: When the timing chain is removed and the cylinder heads are still installed, DO NOT forcefully rotate the camshafts or crankshaft independently of each other. Severe valve and/or piston damage can occur.

CAUTION: When removing the cam sprocket, timing chains or camshaft, Failure to use Special Tool 8350 will result in hydraulic tensioner ratchet over extension, requiring timing chain cover removal to reset the tensioner ratchet.

(1) Remove cylinder head cover (Refer to 9 - ENGINE/CYLINDER HEAD/CYLINDER HEAD COVER(S) - REMOVAL) .

(2) Set engine to TDC cylinder #1, camshaft sprocket V8 marks at the 12 o'clock position.

(3) Mark one link on the secondary timing chain on both sides of the V8 mark on the camshaft sprocket to aid in installation.

CAUTION: Do not hold or pry on the camshaft target wheel (Located on the right side camshaft sprocket) for any reason, Severe damage will occur to the target wheel resulting in a vehicle no start condition.

(4) Loosen but **DO NOT** remove the camshaft sprocket retaining bolt. Leave the bolt snug against the sprocket.

NOTE: The timing chain tensioners must be secured prior to removing the camshaft sprockets. Failure to secure tensioners will allow the tensioners to extend, requiring timing chain cover removal in order to reset tensioners.

CAUTION: Do not force wedge past the narrowest point between the chain strands. Damage to the tensioners may occur.

(5) Position Special Tool 8350 timing chain wedge between the timing chain strands, tap the tool to securely wedge the timing chain against the tensioner arm and guide (Fig. 15).

CAMSHAFT(S) - LEFT (Continued)

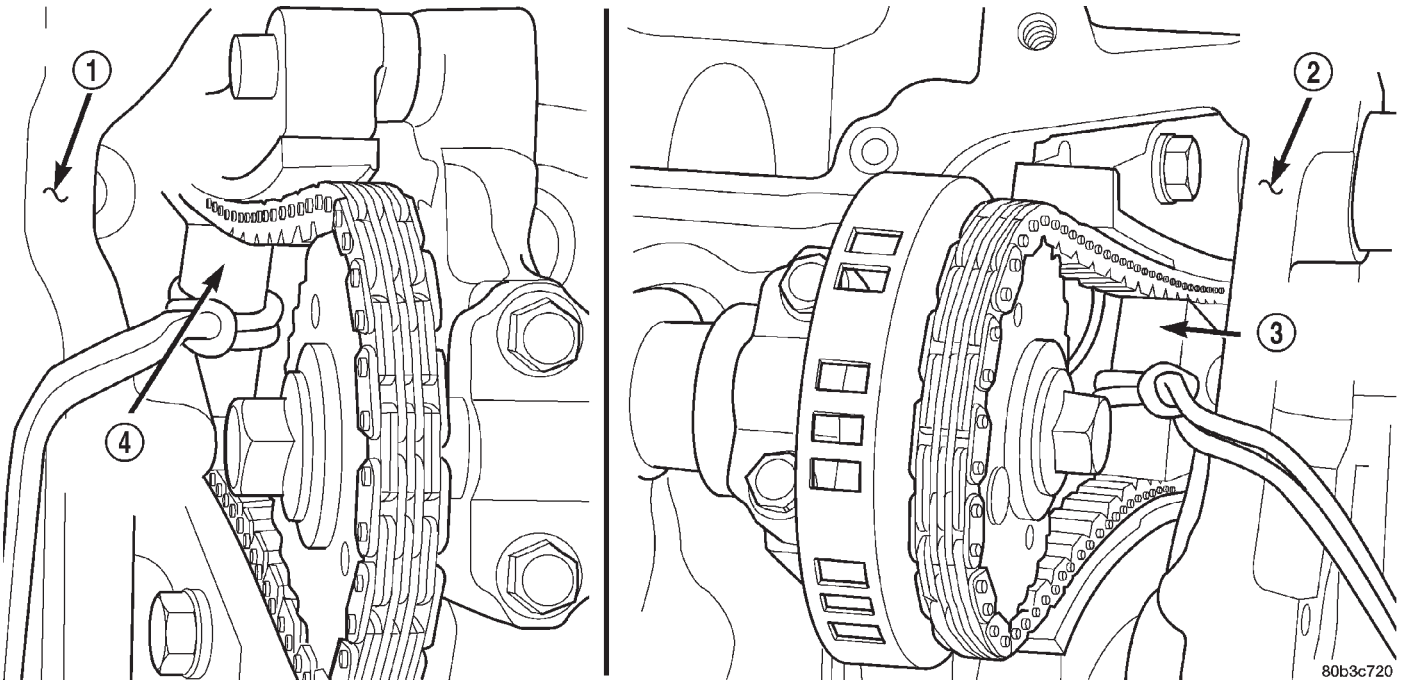

Fig. 15 Securing Timing Chain Tensioners Using Timing Chain Wedge

1 - LEFT CYLINDER HEAD
2 - RIGHT CYLINDER HEAD
3 - SPECIAL TOOL 8350 WEDGE
4 - SPECIAL TOOL 8350 WEDGE

(6) Hold the camshaft with adjustable pliers while removing the camshaft sprocket bolt and sprocket (Fig. 16).

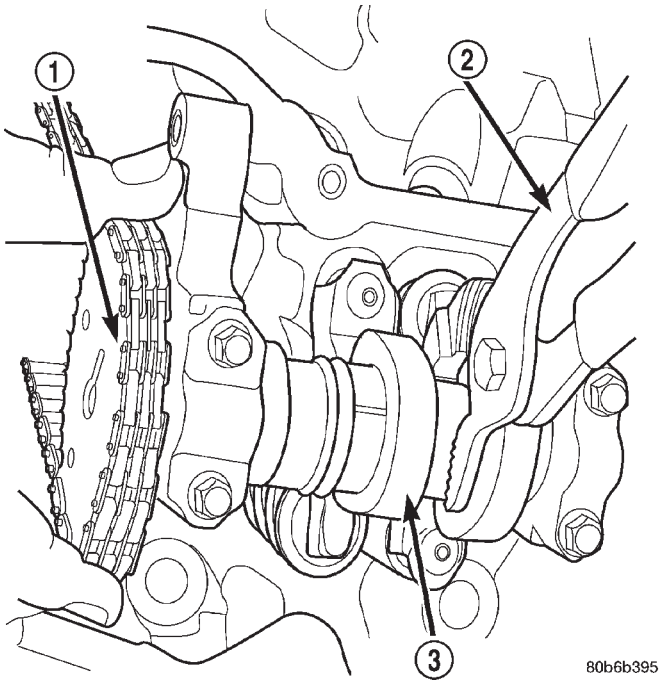

Fig. 16 Camshaft Sprocket and Chain

1 - CAMSHAFT SPROCKET AND CHAIN
2 - ADJUSTABLE PLIERS
3 - CAMSHAFT

CAMSHAFT(S) - LEFT (Continued)

(7) Using the pliers, gently allow the camshaft to rotate 15° clockwise until the camshaft is in the neutral position (no valve load).

(8) Starting at the outside working inward, loosen the camshaft bearing cap retaining bolts 1/2 turn at a time. Repeat until all load is off the bearing caps.

CAUTION: DO NOT STAMP OR STRIKE THE CAMSHAFT BEARING CAPS. SEVERE DAMAGE WILL OCCUR TO THE BEARING CAPS.

NOTE: When the camshaft is removed the rocker arms may slide downward, mark the rocker arms before removing camshaft.

(9) Remove the camshaft bearing caps and the camshaft.

INSTALLATION

(1) Lubricate camshaft journals with clean engine oil.

NOTE: Position the left side camshaft so that the camshaft sprocket dowel is near the 1 o'clock position, This will place the camshaft at the neutral position easing the installation of the camshaft bearing caps.

(2) Position the camshaft into the cylinder head.

(3) Install the camshaft bearing caps, hand tighten the retaining bolts.

(4) Working in ½ turn increments, tighten the bearing cap retaining bolts starting with the middle cap working outward (Fig. 17).

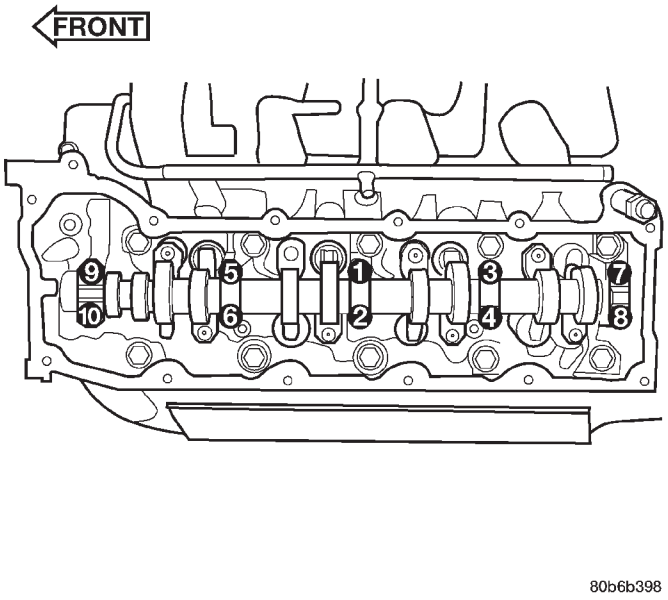

Fig. 17 Camshaft Bearing Caps Tightening Sequence

(5) Torque the camshaft bearing cap retaining bolts to 11 N·m (100 in. lbs.).

CAMSHAFT(S) - LEFT (Continued)

(6) Position the camshaft drive gear into the timing chain aligning the V8 mark between the two marked chain links (Two links marked during removal) (Fig. 18).

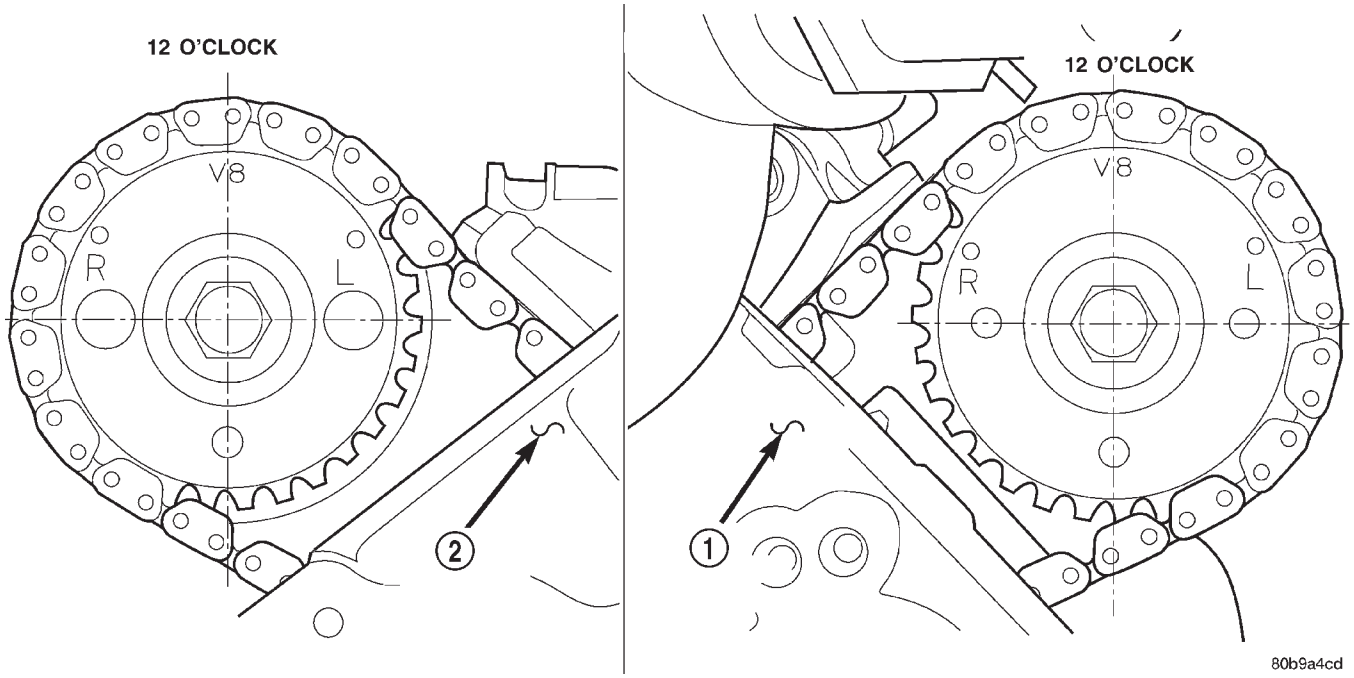

Fig. 18 Timing Chain to Sprocket Alignment

1 - LEFT CYLINDER HEAD
2 - RIGHT CYLINDER HEAD

CAMSHAFT(S) - LEFT (Continued)

(7) Using the adjustable pliers, rotate the camshaft until the camshaft sprocket dowel is aligned with the slot in the camshaft sprocket. Install the sprocket onto the camshaft (Fig. 19).

CAUTION: Remove excess oil from camshaft sprocket bolt. Failure to do so can cause bolt overtorque resulting in bolt failure.

(8) Remove excess oil from bolt, then install the camshaft sprocket retaining bolt and hand tighten.

(9) Remove Special Tool 8350 timing chain wedge (Fig. 20).

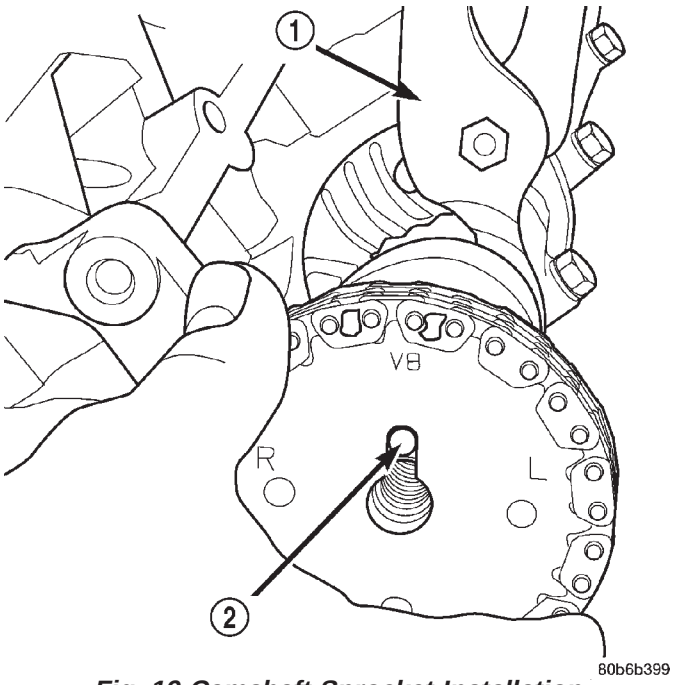

Fig. 19 Camshaft Sprocket Installation

1 - ADJUSTABLE PLIERS
2 - CAMSHAFT DOWEL

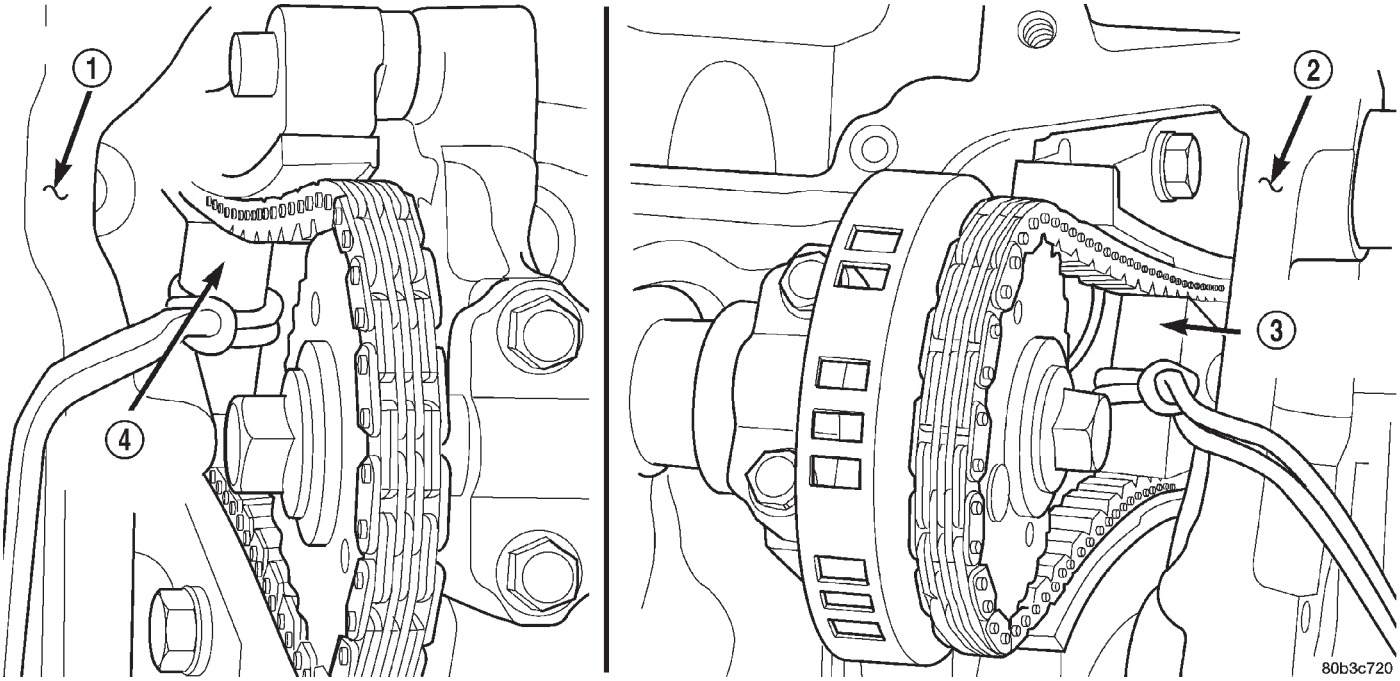

Fig. 20 SPECIAL TOOL 8350

1 - LEFT CYLINDER HEAD
2 - RIGHT CYLINDER HEAD
3 - SPECIAL TOOL 8350 WEDGE
4 - SPECIAL TOOL 8350 WEDGE

CAMSHAFT(S) - LEFT (Continued)

(10) Using Special Tool 6958 spanner wrench with adapter pins 8346 (Fig. 21), torque the camshaft sprocket retaining bolt to 122 N·m (90 ft. lbs.).

(11) Install the cylinder head cover.

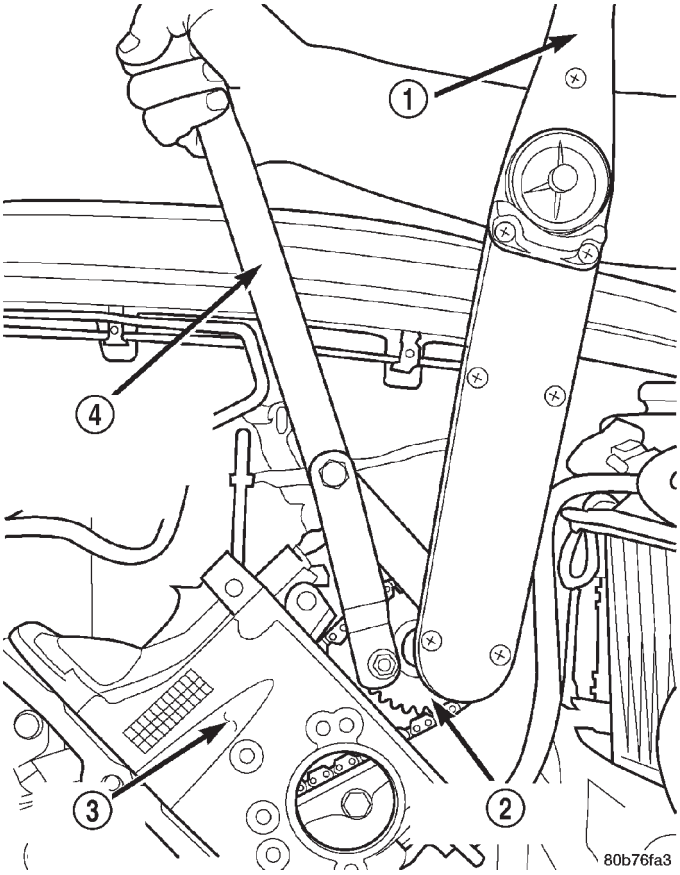

Fig. 21 Tightening Left Side Cam Sprocket Retaining Bolt

1 - TORQUE WRENCH
2 - CAMSHAFT SPROCKET
3 - LEFT CYLINDER HEAD
4 - SPECIAL TOOL 6958 SPANNER WITH ADAPTER PINS 8346

CYLINDER HEAD COVER(S) - LEFT

DESCRIPTION

The cylinder head covers are made of die cast magnesium, and are not interchangeable from side-to-side. It is imperative that nothing rest on the cylinder head covers. Prolonged contact with other items may wear a hole in the cylinder head cover.

REMOVAL—LEFT SIDE

(1) Disconnect negative cable from battery.

(2) Remove the resonator assemble and air inlet hose.

(3) Disconnect injector connectors and un-clip the injector harness.

(4) Route injector harness in front of cylinder head cover.

(5) Disconnect the left side breather tube and remove the breather tube.

(6) Remove the cylinder head cover mounting bolts.

(7) Remove cylinder head cover and gasket.

NOTE: The gasket may be used again, provided no cuts, tears, or deformation has occurred.

CLEANING

Clean cylinder head cover gasket surface.

Clean head rail, if necessary.

INSTALLATION—LEFT SIDE

CAUTION: Do not use harsh cleaners to clean the cylinder head covers. Severe damage to covers may occur.

CAUTION: DO NOT allow other components including the wire harness to rest on or against the cylinder head cover. Prolonged contact with other objects may wear a hole in the engine cylinder head cover.

(1) Clean cylinder head cover and both sealing surfaces. Inspect and replace gasket as necessary.

(2) Install cylinder head cover and hand start all fasteners. Verify that all studs are in the correct location shown in (Fig. 22).

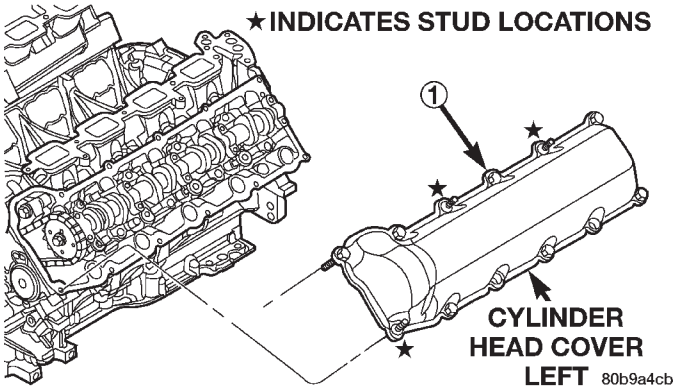

Fig. 22 Cylinder Head Cover—Left

ITEM	DESCRIPTION	TORQUE
1	Cover Fasteners	12 N·m (105 in. lbs.)

(3) Tighten cylinder head cover bolts and double ended studs to 12 N·m (105 in. lbs.).

CYLINDER HEAD COVER(S) - LEFT (Continued)

(4) Install left side breather and connect breather tube.

(5) Connect injector electrical connectors and injector harness retaining clips.

(6) Install the resonator and air inlet hose.

(7) Connect negative cable to battery.

INTAKE/EXHAUST VALVES & SEATS

DESCRIPTION

The valves are made of heat resistant steel and have chrome plated stems to prevent scuffing. Each valve is actuated by a roller rocker arm which pivots on a stationary lash adjuster. All valves use three bead lock keepers to retain the springs and promote valve rotation.

STANDARD PROCEDURE—REFACING

NOTE: Valve seats that are worn or burned can be reworked, provided that correct angle and seat width are maintained. Otherwise the cylinder head must be replaced.

NOTE: When refacing valves and valve seats, it is important that the correct size valve guide pilot be used for reseating stones. A true and complete surface must be obtained.

(1) Using a suitable dial indicator measure the center of the valve seat Total run out must not exceed 0.051 mm (0.002 in).

(2) Apply a small amount of Prussian blue to the valve seat, insert the valve into the cylinder head, while applying light pressure on the valve rotate the valve. Remove the valve and examine the valve face. If the blue is transferred below the top edge of the valve face, lower the valve seat using a 15 degree stone. If the blue is transferred to the bottom edge of the valve face, raise the valve seat using a 65 degree stone.

(3) When the seat is properly positioned the width of the intake seat must be 1.75 – 2.36 mm (0.0689 – 0.0928 in.) and the exhaust seat must be 1.71 – 2.32 mm (0.0673 – 0.0911 in.).

(4) Check the valve spring installed height after refacing the valve and seat. The installed height for both intake and exhaust valve springs must not exceed 41.44 mm (1.6315 in.) .

(5) The valve seat and valve face must maintain a face angle of 44.5 – 45 degrees angle (Fig. 23).

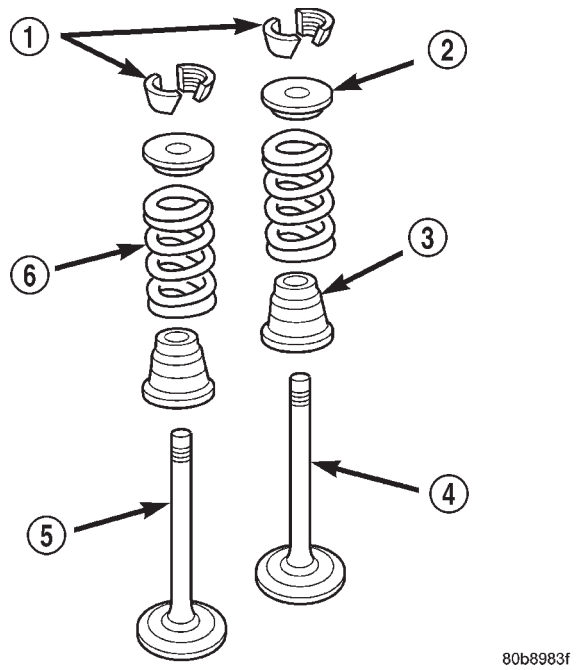

Fig. 23 Valve Assembly Configuration

1 - VALVE LOCKS (3–BEAD)
2 - RETAINER
3 - VALVE STEM OIL SEAL
4 - INTAKE VALVE
5 - EXHAUST VALVE
6 - VALVE SPRING

REMOVAL

NOTE: The cylinder heads must be removed in order to preform this procedure.

(1) Using Special Tool 8516 Valve Spring Compressor, remove the rocker arms and the hydraulic lash adjusters (Fig. 24).

(2) Remove the camshaft bearing caps and the camshaft.

NOTE: All eight valve springs and valves are removed in the same manner; this procedure only covers one valve and valve spring.

(3) Using Special Tool C-3422–B or C-3422–C Valve Spring Compressor and Special tool 8519 Adapter, compress the valve spring.

NOTE: It may be necessary to tap the top of the valve spring to loosen the spring retainers locks enough to be removed.

(4) Remove the two spring retainer lock halves.

NOTE: the valve spring is under tension use care when releasing the valve spring compressor.

INTAKE/EXHAUST VALVES & SEATS (Continued)

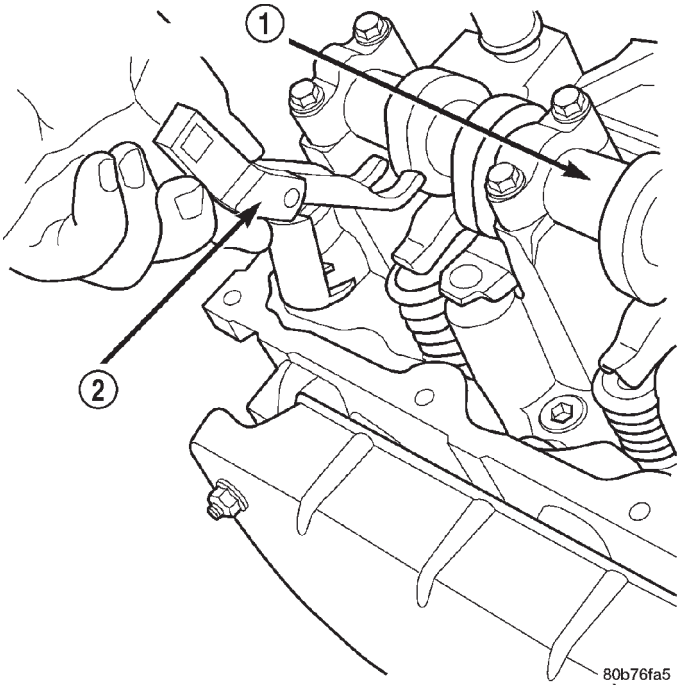

Fig. 24 Rocker Arm Removal

1 - CAMSHAFT
2 - SPECIAL TOOL 8516

(5) Remove the valve spring compressor.
(6) Remove the spring retainer, and the spring.

NOTE: Check for sharp edges on the keeper grooves. Remove any burrs from the valve stem before removing the valve from the cylinder head.

(7) Remove the valve from the cylinder head.

NOTE: The valve stem seals are common between intake and exhaust.

(8) Remove the valve stem seal. Mark the valve for proper installation.

TESTING VALVE SPRINGS

NOTE: Whenever the valves are removed from the cylinder head it is recommended that the valve springs be inspected and tested for reuse.

Inspect the valve springs for physical signs of wear or damage. Turn table of tool C-647 until surface is in line with the 40.69 mm (1.602 in.) mark on the threaded stud and the zero mark on the front. Place spring over the stud on the table and lift compressing lever to set tone device. Pull on torque wrench until Ping is heard. Take reading on torque wrench at this instant. Multiply this reading by two. This will give the spring load at test length. Fractional measurements are indicated on the table for finer adjustments. Refer to Specifications Section to obtain specified height and allowable tensions. Replace any springs that do not meet specifications. (Fig. 25)

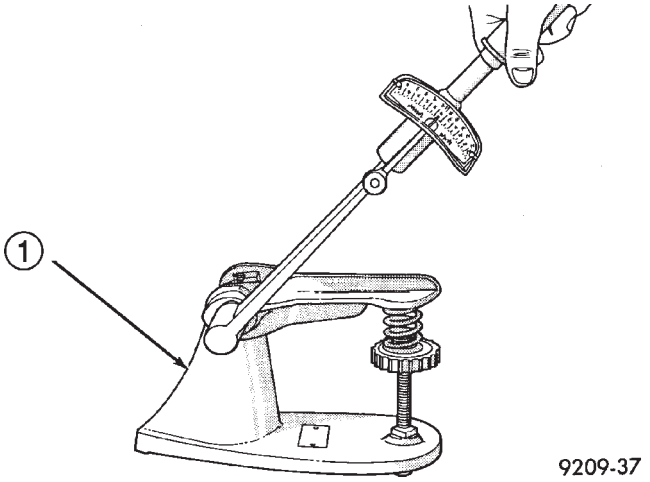

Fig. 25 Testing Valve Springs

1 - SPECIAL TOOL C-647

INSTALLATION

(1) coat the valve stem with clean engine oil and insert it into the cylinder head.

(2) Install the valve stem seal. make sure the seal is fully seated and that the garter spring at the top of the seal is intact.

(3) Install the spring and the spring retainer (Fig. 26).

(4) Using the valve spring compressor, compress the spring and install the two valve spring retainer halves.

(5) Release the valve spring compressor and make sure the two spring retainer halves and the spring retainer are fully seated.

(6) lubricate the camshaft journal with clean engine oil then Position the camshaft (with the sprocket dowel on the left camshaft at 11 o'clock and the right camshaft at 12 o'clock), then position the camshaft bearing caps.

(7) Install the camshaft bearing cap retaining bolts. Tighten the bolts 9–13 N·m (100 in. lbs.) in ½ turn increments in the sequence shown (Fig. 27).

(8) Position the hydraulic lash adjusters and rocker arms (Fig. 24).

ROCKER ARM / ADJUSTER ASSEMBLY

DESCRIPTION

The rocker arms are steel stampings with an integral roller bearing. The rocker arms incorporate a 2.8

ROCKER ARM / ADJUSTER ASSEMBLY (Continued)

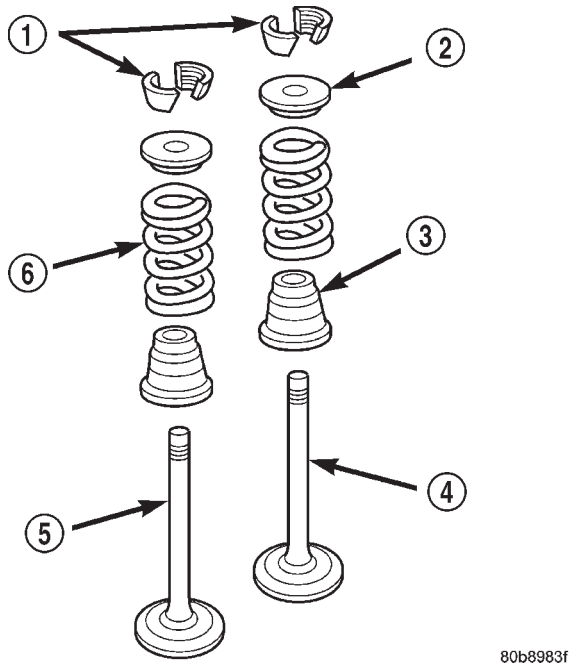

Fig. 26 Valve Assembly Configuration

1 - VALVE LOCKS (3–BEAD)
2 - RETAINER
3 - VALVE STEM OIL SEAL
4 - INTAKE VALVE
5 - EXHAUST VALVE
6 - VALVE SPRING

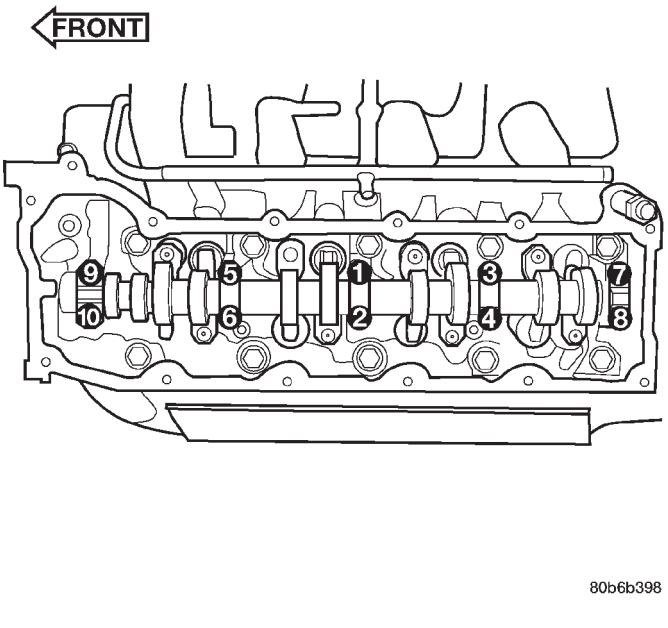

Fig. 27 Camshaft Bearing Caps Tightening Sequence

mm (0.11 inch) oil hole in the lash adjuster socket for roller and camshaft lubrication.

REMOVAL

NOTE: Disconnect the battery negative cable to prevent accidental starter engagement.

(1) Remove the cylinder head cover. Refer to Cylinder Head Cover in this section.

(2) For rocker arm removal on cylinders 3 and 5 Rotate the crankshaft until cylinder #1 is at TDC exhaust stroke.

(3) For rocker arm removal on cylinders 2 and 8 Rotate the crankshaft until cylinder #1 is at TDC compression stroke.

(4) For rocker arm removal on cylinders 4 and 6 Rotate the crankshaft until cylinder #3 is at TDC compression stroke.

(5) For rocker arm removal on cylinders 1 and 7 Rotate the crankshaft until cylinder #2 is at TDC compression stroke.

(6) Using special tool 8516 press downward on the valve spring, remove rocker arm (Fig. 28).

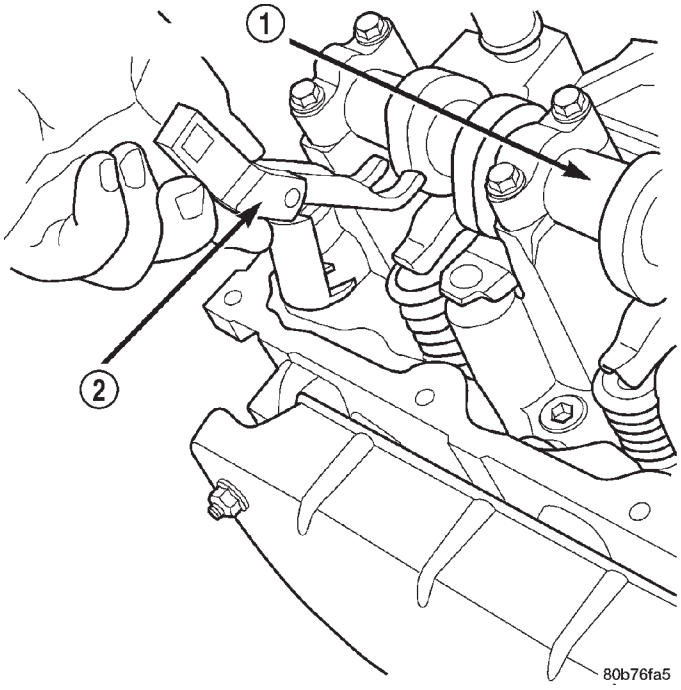

Fig. 28 Rocker Arm—Removal

1 - CAMSHAFT
2 - SPECIAL TOOL 8516

INSTALLATION

CAUTION: Make sure the rocker arms are installed with the concave pocket over the lash adjusters. Failure to do so may cause severe damage to the rocker arms and/or lash adjusters.

ROCKER ARM / ADJUSTER ASSEMBLY (Continued)

NOTE: Coat the rocker arms with clean engine oil prior to installation.

(1) For rocker arm installation on cylinders 3 and 5 Rotate the crankshaft until cylinder #1 is at TDC exhaust stroke.

(2) For rocker arm installation on cylinders 2 and 8 Rotate the crankshaft until cylinder #1 is at TDC compression stroke.

(3) For rocker arm installation on cylinders 4 and 6 Rotate the crankshaft until cylinder #3 is at TDC compression stroke.

(4) For rocker arm installation on cylinders 1 and 7 Rotate the crankshaft until cylinder #2 is at TDC compression stroke.

(5) Using special tool 8516 press downward on the valve spring, install rocker arm (Fig. 28).

(6) Install the cylinder head cover.

VALVE SPRINGS

DESCRIPTION

The valve springs are made from high strength chrome silicon steel. The springs are common for intake and exhaust applications. The valve spring seat is integral with the valve stem seal, which is a positive type seal to control lubrication.

VALVE STEM SEALS

DESCRIPTION

The valve stem seals are made of rubber and incorporate an integral steel valve spring seat. The integral garter spring maintains consistent lubrication control to the valve stems.

CYLINDER HEAD - RIGHT

DESCRIPTION—CYLINDER HEAD

The cylinder heads are made of an aluminum alloy. The cylinder head features two valves per cylinder with pressed in powdered metal valve guides. The cylinder heads also provide enclosures for the timing chain drain, necessitating unique left and right cylinder heads.

DESCRIPTION—VALVE GUIDES

The valve guides are made of powered metal and are pressed into the cylinder head. The guides are not replaceable or serviceable, and valve guide reaming is not recommended. If the guides are worn beyond acceptable limits, replace the cylinder heads.

DIAGNOSIS AND TESTING—CYLINDER HEAD GASKET

A cylinder head gasket leak can be located between adjacent cylinders or between a cylinder and the adjacent water jacket.

Possible indications of the cylinder head gasket leaking between adjacent cylinders are:

- Loss of engine power
- Engine misfiring
- Poor fuel economy

Possible indications of the cylinder head gasket leaking between a cylinder and an adjacent water jacket are:

- Engine overheating
- Loss of coolant
- Excessive steam (white smoke) emitting from exhaust
- Coolant foaming

CYLINDER-TO-CYLINDER LEAKAGE TEST

To determine if an engine cylinder head gasket is leaking between adjacent cylinders, follow the procedures in Cylinder Compression Pressure Test (Refer to 9 - ENGINE - DIAGNOSIS AND TESTING). An engine cylinder head gasket leaking between adjacent cylinders will result in approximately a 50–70% reduction in compression pressure.

CYLINDER-TO-WATER JACKET LEAKAGE TEST

WARNING: USE EXTREME CAUTION WHEN THE ENGINE IS OPERATING WITH COOLANT PRESSURE CAP REMOVED.

VISUAL TEST METHOD

With the engine cool, remove the coolant pressure cap. Start the engine and allow it to warm up until thermostat opens.

If a large combustion/compression pressure leak exists, bubbles will be visible in the coolant.

COOLING SYSTEM TESTER METHOD

WARNING: WITH COOLING SYSTEM TESTER IN PLACE, PRESSURE WILL BUILD UP FAST. EXCESSIVE PRESSURE BUILT UP, BY CONTINUOUS ENGINE OPERATION, MUST BE RELEASED TO A SAFE PRESSURE POINT. NEVER PERMIT PRESSURE TO EXCEED 138 kPa (20 psi).

Install Cooling System Tester 7700 or equivalent to pressure cap neck. Start the engine and observe the tester's pressure gauge. If gauge pulsates with every power stroke of a cylinder a combustion pressure leak is evident.

CYLINDER HEAD - RIGHT (Continued)

CHEMICAL TEST METHOD

Combustion leaks into the cooling system can also be checked by using Bloc-Chek Kit C-3685-A or equivalent. Perform test following the procedures supplied with the tool kit.

DIAGNOSIS AND TESTING—HYDRAULIC LASH ADJUSTER NOISE DIAGNOSIS

A tappet-like noise may be produced from several items. Check the following items.

(1) Engine oil level too high or too low. This may cause aerated oil to enter the adjusters and cause them to be spongy.

(2) Insufficient running time after rebuilding cylinder head. Low speed running up to 1 hour may be required.

(3) Turn engine off and let set for a few minutes before restarting. Repeat this several times after engine has reached normal operating temperature.

(4) Low oil pressure.

(5) The oil restrictor in cylinder head gasket or the oil passage to the cylinder head is plugged with debris.

(6) Air ingested into oil due to broken or cracked oil pump pick up.

(7) Worn valve guides.

(8) Rocker arm ears contacting valve spring retainer.

(9) Rocker arm loose, adjuster stuck or at maximum extension and still leaves lash in the system.

(10) Faulty lash adjuster.

- Check lash adjusters for sponginess while installed in cylinder head and cam on camshaft at base circle. Depress part of rocker arm over adjuster. Normal adjusters should feel very firm. Spongy adjusters can be bottomed out easily.
- Remove suspected lash adjusters, and replace.
- Before installation, make sure adjusters are at least partially full of oil. This can be verified by little or no plunger travel when lash adjuster is depressed.

REMOVAL

(1) Disconnect battery negitive cable.

(2) Raise the vehicle on a hoist.

(3) Disconnect the exhaust pipe at the right side exhaust manifold.

(4) Drain the engine coolant (Refer to 7 - COOLING - STANDARD PROCEDURE).

(5) Lower the vehicle.

(6) Remove the intake manifold (Refer to 9 - ENGINE/MANIFOLDS/INTAKE MANIFOLD - REMOVAL).

(7) Remove the cylinder head cover (Refer to 9 - ENGINE/CYLINDER HEAD/CYLINDER HEAD COVER(S) - REMOVAL).

(8) Remove oil fill housing from cylinder head.

(9) Remove accessory drive belt (Refer to 7 - COOLING/ACCESSORY DRIVE/DRIVE BELTS - REMOVAL).

(10) Rotate the crankshaft until the damper timing mark is aligned with TDC indicator mark (Fig. 9).

(11) Verify the V8 mark on the camshaft sprocket is at the 12 o'clock position (Fig. 11). Rotate the crankshaft one turn if necessary.

(12) Remove the crankshaft damper (Refer to 9 - ENGINE/ENGINE BLOCK/VIBRATION DAMPER - REMOVAL).

(13) Remove the timing chain cover (Refer to 9 - ENGINE/VALVE TIMING/TIMING BELT / CHAIN COVER(S) - REMOVAL).

(14) Lock the secondary timing chains to the idler sprocket using Special Tool 8515 (Fig. 10).

NOTE: Mark the secondary timing chain prior to removal to aid in installation.

(15) Mark the secondary timing chain, one link on each side of the V8 mark on the camshaft drive gear (Fig. 11).

(16) Remove the right side secondary chain tensioner (Refer to 9 - ENGINE/VALVE TIMING/TIMING BELT/CHAIN AND SPROCKETS - REMOVAL).

(17) Remove the cylinder head access plug (Fig. 29).

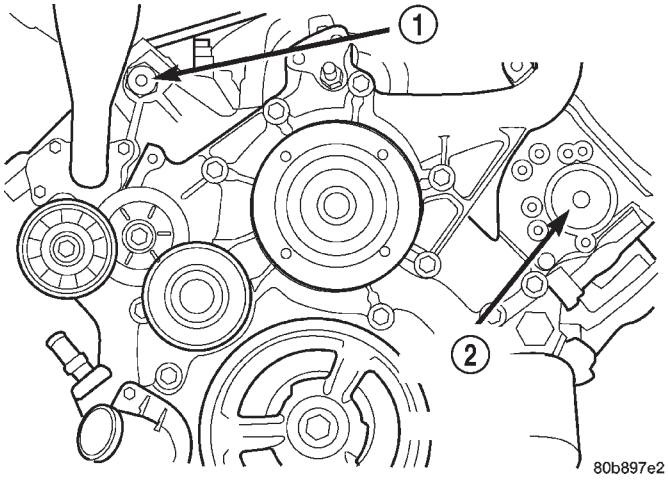

Fig. 29 Cylinder Head Access Plugs

1 - RIGHT CYLINDER HEAD ACCESS PLUG
2 - LEFT CYLINDER HEAD ACCESS PLUG

(18) Remove the right side secondary chain guide (Refer to 9 - ENGINE/VALVE TIMING/TIMING BELT/CHAIN AND SPROCKETS - REMOVAL).

(19) Remove the retaining bolt and the camshaft drive gear.

CYLINDER HEAD - RIGHT (Continued)

CAUTION: Do not allow the engine to rotate. severe damage to the valve train can occur.

CAUTION: Do not overlook the four smaller bolts at the front of the cylinder head. Do not attempt to remove the cylinder head without removing these four bolts.

CAUTION: Do not hold or pry on the camshaft target wheel for any reason. A damaged target wheel can result in a vehicle no start condition.

NOTE: The cylinder head is attached to the cylinder block with fourteen bolts.

(20) Remove the cylinder head retaining bolts.
(21) Remove the cylinder head and gasket. Discard the gasket.

CAUTION: Do not lay the cylinder head on its gasket sealing surface, do to the design of the cylinder head gasket any distortion to the cylinder head sealing surface may prevent the gasket from properly sealing resulting in leaks.

CLEANING

To ensure engine gasket sealing, proper surface preparation must be performed, especially with the use of aluminum engine components. (Refer to 9 - ENGINE - STANDARD PROCEDURE)

INSPECTION

(1) Inspect the cylinder head for out-of-flatness, using a straightedge and a feeler gauge. If tolerances exceed 0.0508 mm (0.002 in.) replace the cylinder head.
(2) Inspect the valve seats for damage. Service the valve seats as necessary.
(3) Inspect the valve guides for wear, cracks or looseness. If either condition exist, replace the cylinder head.

INSTALLATION

NOTE: The cylinder head bolts are tightened using a torque plus angle procedure. The bolts must be examined BEFORE reuse. If the threads are necked down the bolts should be replaced.

Necking can be checked by holding a straight edge against the threads. If all the threads do not contact the scale, the bolt should be replaced (Fig. 13).

CAUTION: When cleaning cylinder head and cylinder block surfaces, DO NOT use a metal scraper because the surfaces could be cut or ground. Use only a wooden or plastic scraper.

(1) Clean the cylinder head and cylinder block mating surfaces (Refer to 9 - ENGINE - STANDARD PROCEDURE).
(2) Position the new cylinder head gasket on the locating dowels.

CAUTION: When installing cylinder head, use care not damage the tensioner arm or the guide arm.

(3) Position the cylinder head onto the cylinder block. Make sure the cylinder head seats fully over the locating dowels.

NOTE: The four smaller cylinder head mounting bolts require sealant to be added to them before installing. Failure to do so may cause leaks.

(4) Lubricate the cylinder head bolt threads with clean engine oil and install the ten M10 bolts.
(5) Coat the four M8 cylinder head bolts with **Mopar Lock and Seal Adhesive**then install the bolts.

NOTE: The cylinder head bolts are tightened using an angle torque procedure, however, the bolts are not a torque-to-yield design.

(6) Tighten the bolts in sequence (Fig. 30) using the following steps and torque values:
- Step 1: Tighten bolts 1–10, 20 N·m (15 ft. lbs.).
- Step 2: Tighten bolts 1–10, 47 N·m (35 ft. lbs.). Tighten bolts 11–14, 25 N·m (18 ft. lbs.).
- Step 3: Tighten bolts 1–10, 90 degrees. Tighten bolts 11–14, 26 N·m (19 ft. lbs.).

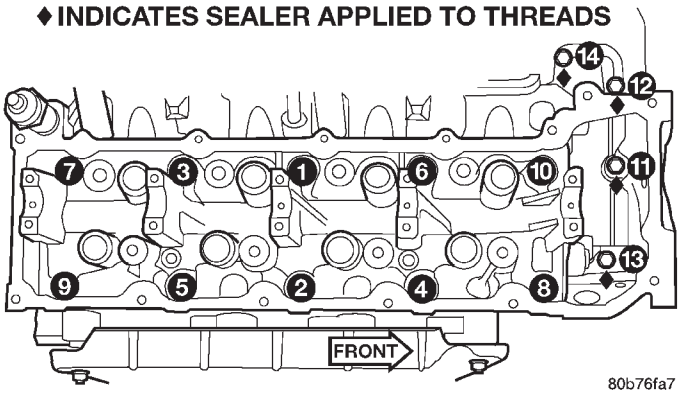

Fig. 30 Cylinder Head Tightening Sequence

(7) Install the secondary chain and secondary chain guide (Refer to 9 - ENGINE/VALVE TIMING/

CYLINDER HEAD - RIGHT (Continued)

TIMING BELT/CHAIN AND SPROCKETS - INSTALLATION).

(8) Install the cylinder head access plug.

(9) Re-set and install the right side secondary chain tensioner (Refer to 9 - ENGINE/VALVE TIMING/TIMING BELT/CHAIN AND SPROCKETS - INSTALLATION).

(10) Remove Special Tool 8515.

(11) Install the timing chain cover (Refer to 9 - ENGINE/VALVE TIMING/TIMING BELT / CHAIN COVER(S) - INSTALLATION).

(12) Install the crankshaft damper (Refer to 9 - ENGINE/ENGINE BLOCK/VIBRATION DAMPER - INSTALLATION).

(13) Install accessory drive belt (Refer to 7 - COOLING/ACCESSORY DRIVE/DRIVE BELTS - INSTALLATION).

(14) Install the cylinder head cover (Refer to 9 - ENGINE/CYLINDER HEAD/CYLINDER HEAD COVER(S) - INSTALLATION).

(15) Install the intake manifold (Refer to 9 - ENGINE/MANIFOLDS/INTAKE MANIFOLD - INSTALLATION).

(16) Install oil fill housing onto cylinder head.

(17) Refill the cooling system (Refer to 7 - COOLING - STANDARD PROCEDURE).

(18) Raise the vehicle.

(19) Install the exhaust pipe onto the right exhaust manifold.

(20) Lower the vehicle.

(21) Reconnect battery negitive cable.

(22) Start the engine and check for leaks.

CAMSHAFT(S) - RIGHT

DESCRIPTION

The camshafts consist of powdered metal steel lobes which are sinter-bonded to a steel tube. A steel post or nose piece is friction-welded to the steel camshaft tube. Five bearing journals are machined into the camshaft, four on the steel tube and one on the steel nose piece. Camshaft end play is controlled by two thrust walls that border the nose piece journal. Engine oil enters the hollow camshafts at the third journal and lubricates every intake lobe rocker through a drilled passage in the intake lobe.

REMOVAL

CAUTION: When the timing chain is removed and the cylinder heads are still installed, DO NOT forcefully rotate the camshafts or crankshaft independently of each other. Severe valve and/or piston damage can occur.

CAUTION: When removing the cam sprocket, timing chains or camshaft, Failure to use special tool 8350 will result in hydraulic tensioner ratchet over extension, Requiring timing chain cover removal to re-set the tensioner ratchet.

(1) Remove the cylinder head covers (Refer to 9 - ENGINE/CYLINDER HEAD/CYLINDER HEAD COVER(S) - REMOVAL).

(2) Set engine to TDC cylinder #1, camshaft sprocket V8 marks at the 12 o'clock position.

(3) Mark one link on the secondary timing chain on both sides of the V8 mark on the camshaft sprocket to aid in installation.

CAUTION: Do not hold or pry on the camshaft target wheel for any reason, Severe damage will occur to the target wheel. A damaged target wheel could cause a vehicle no start condition.

(4) Loosen but **DO NOT** remove the camshaft sprocket retaining bolt. Leave bolt snug against sprocket.

NOTE: The timing chain tensioners must be secured prior to removing the camshaft sprockets. Failure to secure tensioners will allow the tensioners to extend, requiring timing chain cover removal in order to reset tensioners.

CAUTION: Do not force wedge past the narrowest point between the chain strands. Damage to the tensioners may occur.

(5) Position Special Tool 8350 timing chain wedge between the timing chain strands. Tap the tool to securely wedge the timing chain against the tensioner arm and guide (Fig. 31).

(6) Remove the camshaft position sensor (Fig. 32).

(7) Hold the camshaft with adjustable pliers while removing the camshaft sprocket bolt and sprocket (Fig. 33).

(8) Using the pliers, gently allow the camshaft to rotate 45° counter-clockwise until the camshaft is in the neutral position (no valve load).

(9) Starting at the outside working inward, loosen the camshaft bearing cap retaining bolts 1/2 turn at a time. Repeat until all load is off the bearing caps.

CAUTION: DO NOT STAMP OR STRIKE THE CAMSHAFT BEARING CAPS. SEVERE DAMAGE WILL OCCUR TO THE BEARING CAPS.

NOTE: When the camshaft is removed the rocker arms may slide downward, mark the rocker arms before removing camshaft.

CAMSHAFT(S) - RIGHT (Continued)

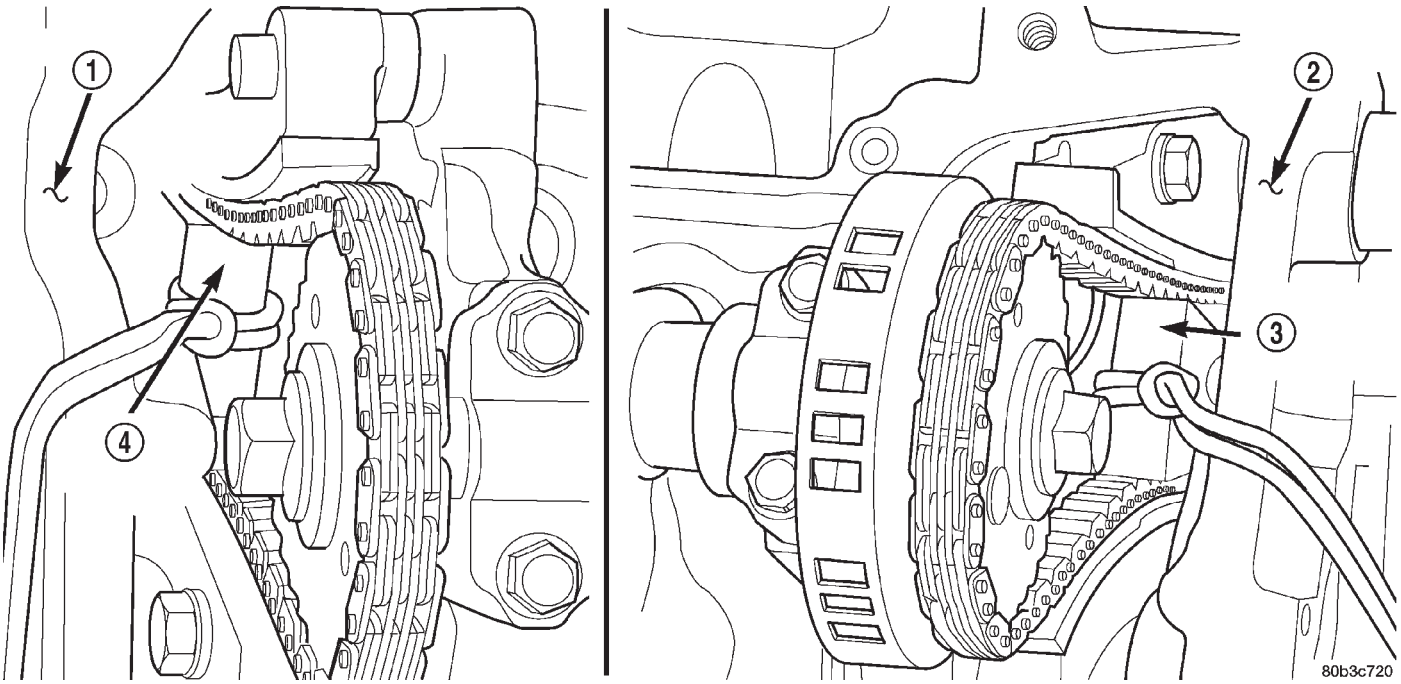

Fig. 31 Securing Timing Chain Tensioners Using Timing Chain Wedge

1 - LEFT CYLINDER HEAD
2 - RIGHT CYLINDER HEAD
3 - SPECIAL TOOL 8350 WEDGE
4 - SPECIAL TOOL 8350 WEDGE

(10) Remove the camshaft bearing caps and the camshaft.

INSTALLATION

(1) Lubricate camshaft journals with clean engine oil.

NOTE: Position the right side camshaft so that the camshaft sprocket dowel is near the 10 o'clock position, This will place the camshaft at the neutral position easing the installation of the camshaft bearing caps.

(2) Position the camshaft into the cylinder head.

(3) Install the camshaft bearing caps, hand tighten the retaining bolts.

(4) Working in 1/2 turn increments, tighten the bearing cap retaining bolts starting with the middle cap working outward (Fig. 34).

(5) Torque the camshaft bearing cap retaining bolts to 11 N·m (100 in. lbs.).

(6) Position the camshaft drive gear into the timing chain aligning the V8 mark between the two marked chain links (Two links marked during removal) (Fig. 35).

(7) Using the adjustable pliers, rotate the camshaft until the camshaft sprocket dowel is aligned with the slot in the camshaft sprocket . Install the sprocket onto the camshaft (Fig. 36).

CAUTION: Remove excess oil from camshaft sprocket bolt. Failure to do so can cause bolt overtorque resulting in bolt failure.

(8) Remove excess oil from camshaft sprocket bolt, then install the camshaft sprocket retaining bolt and hand tighten.

(9) Remove timing chain wedge special tool 8350 (Fig. 31).

(10) Using Special Tool 6958 spanner wrench with adapter pins 8346 (Fig. 37), torque the camshaft sprocket retaining bolt to 122 N·m (90 ft. lbs.).

(11) Install the camshaft position sensor (Fig. 32).

(12) Install the cylinder head cover (Refer to 9 - ENGINE/CYLINDER HEAD/CYLINDER HEAD COVER(S) - INSTALLATION).

CAMSHAFT(S) - RIGHT (Continued)

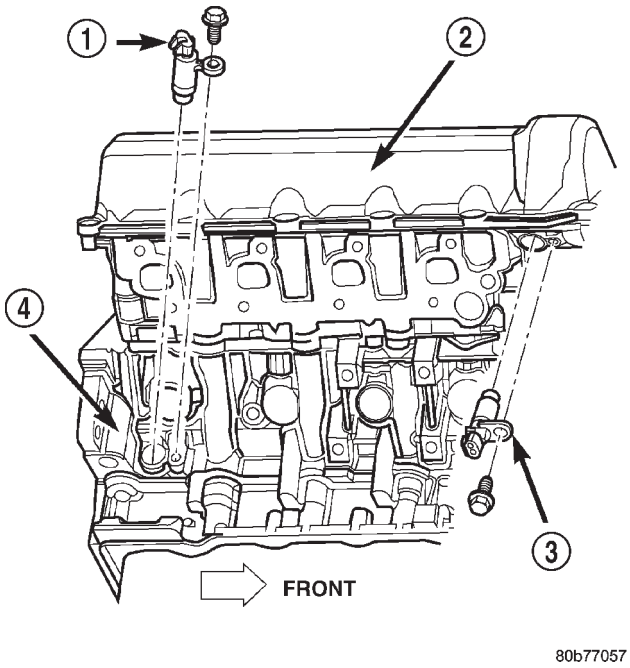

Fig. 32 Camshaft Position Sensor

1 - CRANKSHAFT POSITION SENSOR
2 - CYLINDER HEAD COVER
3 - CAMSHAFT POSITION SENSOR
4 - RIGHT SIDE CYLINDER BLOCK

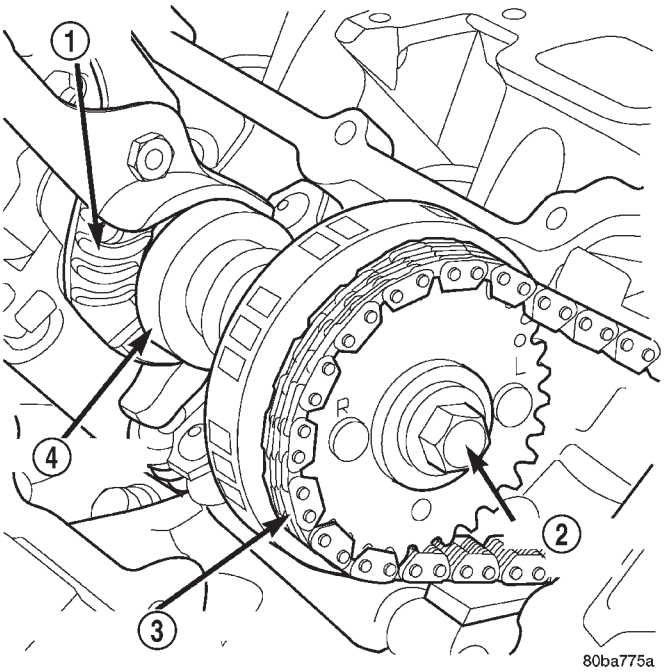

Fig. 33 Camshaft Sprocket and Chain

1 - ADJUSTABLE PLIERS
2 - SPROCKET BOLT
3 - CAMSHAFT SPROCKET AND CHAIN
4 - CAMSHAFT

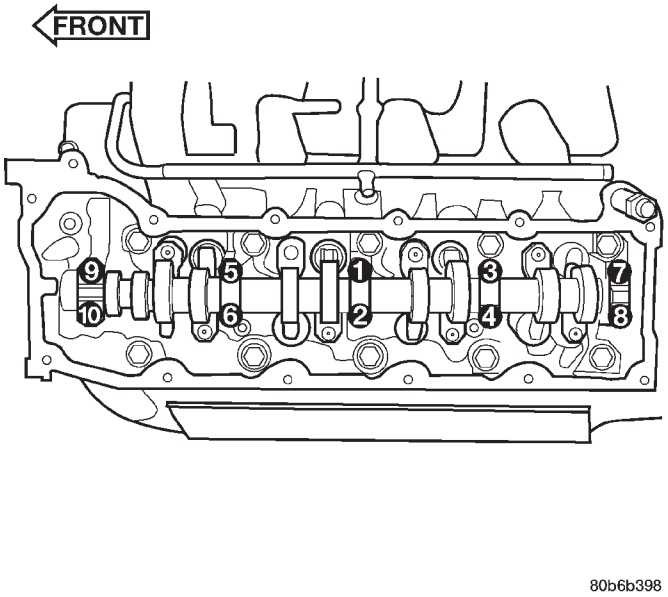

Fig. 34 Camshaft Bearing Caps Tightening Sequence

CAMSHAFT(S) - RIGHT (Continued)

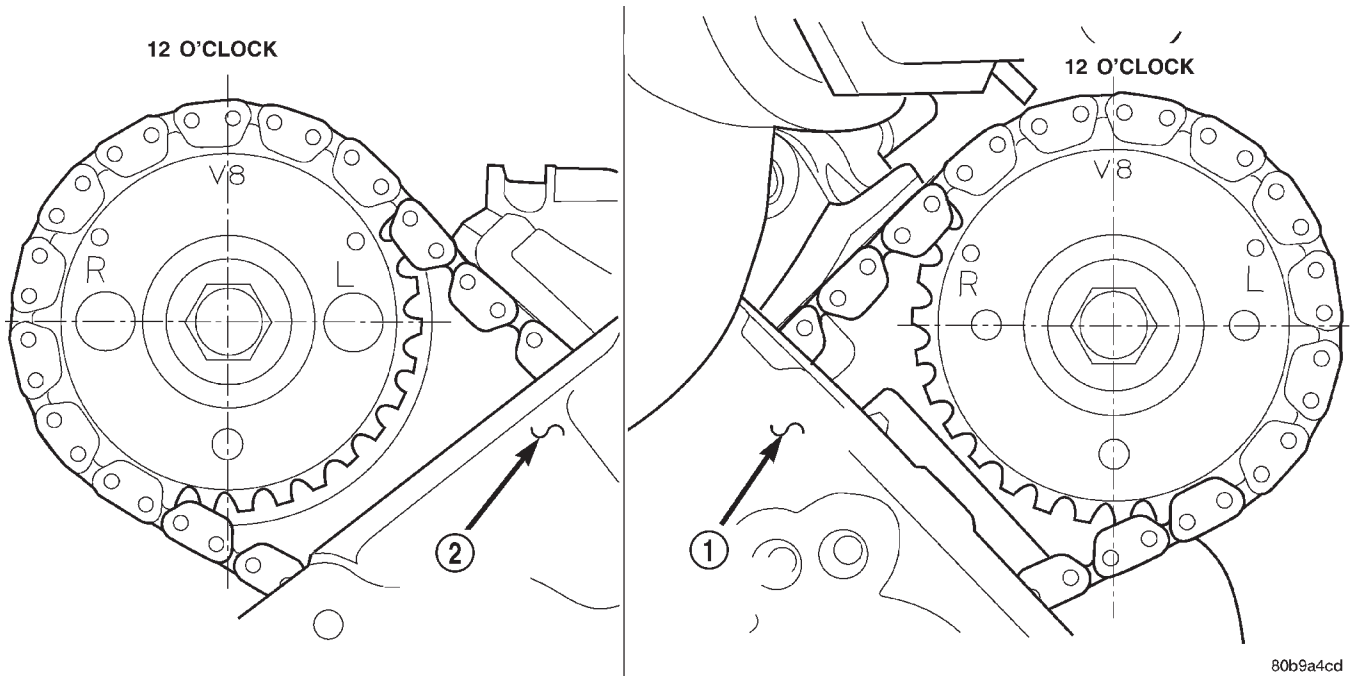

Fig. 35 Timing Chain to Sprocket Alignment

1 - LEFT CYLINDER HEAD
2 - RIGHT CYLINDER HEAD

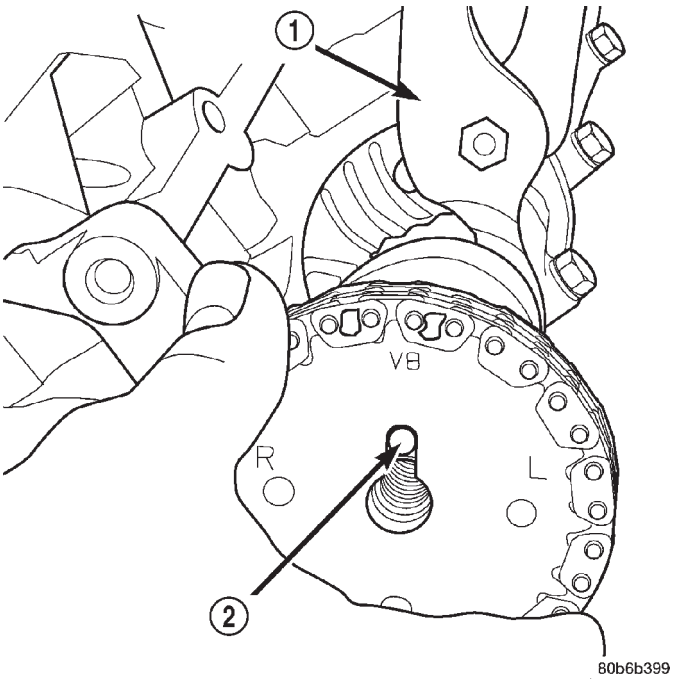

Fig. 36 Camshaft Sprocket Installation

1 - ADJUSTABLE PLIERS
2 - CAMSHAFT DOWEL

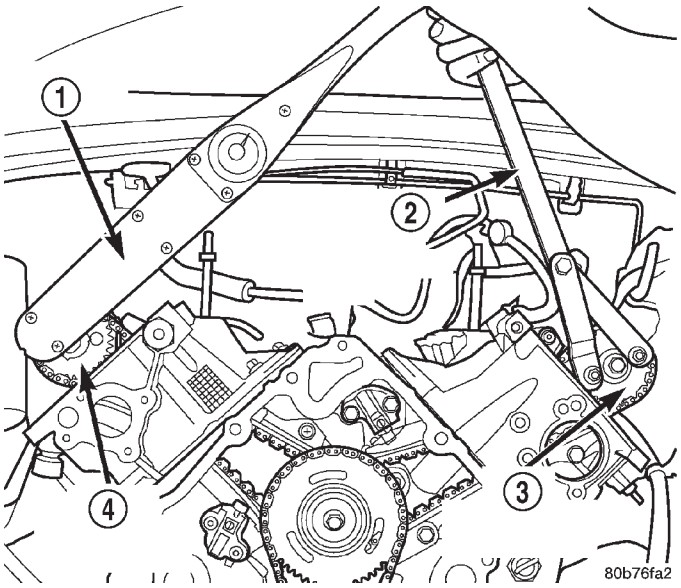

Fig. 37 Tightening Right Side Cam Sprocket Retaining Bolt

1 - TORQUE WRENCH
2 - SPECIAL TOOL 6958 WITH ADAPTER PINS 8346
3 - LEFT CAMSHAFT SPROCKET
4 - RIGHT CAMSHAFT SPROCKET

CYLINDER HEAD COVER(S) - RIGHT

DESCRIPTION

The cylinder head covers are made of die cast magnesium, and are not interchangeable from side-to-side. It is imperative that nothing rest on the cylinder head covers. Prolonged contact with other items may wear a hole in the cylinder head cover.

REMOVAL—RIGHT SIDE

(1) Disconnect battery negative cable.
(2) Remove air cleaner assembly, resonator assembly and air inlet hose.
(3) Drain cooling system (Refer to 7 - COOLING - STANDARD PROCEDURE).
(4) Remove accessory drive belt (Refer to 7 - COOLING/ACCESSORY DRIVE/DRIVE BELTS - REMOVAL).
(5) Remove air conditioning compressor retaining bolts and move compressor to the left.
(6) Remove heater hoses.
(7) Disconnect injector and ignition coil connectors.
(8) Disconnect and remove positive crankcase ventilation (PCV) hose.
(9) Remove oil fill tube.
(10) Un-clip injector and ignition coil harness and move away from cylinder head cover.
(11) Remove right rear breather tube and filter assembly.
(12) Remove cylinder head cover retaining bolts.
(13) Remove cylinder head cover.

NOTE: The gasket may be used again, provided no cuts, tears, or deformation has occurred.

CLEANING

Clean cylinder head cover gasket surface.
Clean head rail, if necessary.

INSTALLATION—RIGHT SIDE

CAUTION: Do not use harsh cleaners to clean the cylinder head covers. Severe damage to covers may occur.

CAUTION: DO NOT allow other components including the wire harness to rest on or against the engine cylinder head cover. Prolonged contact with other objects may wear a hole in the cylinder head cover.

(1) Clean cylinder head cover and both sealing surfaces. Inspect and replace gasket as necessary.
(2) Install cylinder head cover and hand start all fasteners. Verify that all double ended studs are in the correct location shown in (Fig. 38).

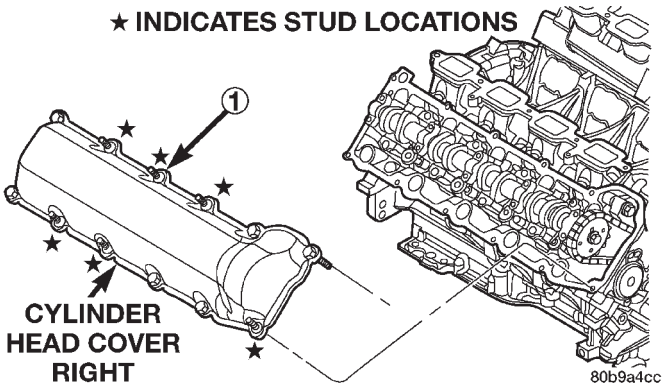

Fig. 38 Cylinder Head Cover—Right

ITEM	DESCRIPTION	TORQUE
1	Cover Fasteners	12 N·m (105 in. lbs.)

(3) Tighten cylinder head cover bolts and double ended studs to 12 N·m (105 in. lbs).
(4) Install right rear breather tube and filter assembly.
(5) Connect injector, ignition coil electrical connectors and harness retaining clips.
(6) Install the oil fill tube.
(7) Install PCV hose.
(8) Install heater hoses.
(9) Install air conditioning compressor retaining bolts.
(10) Install accessory drive belt (Refer to 7 - COOLING/ACCESSORY DRIVE/DRIVE BELTS - INSTALLATION).
(11) Fill Cooling system (Refer to 7 - COOLING - STANDARD PROCEDURE).
(12) Install air cleaner assembly, resonator assembly and air inlet hose.
(13) Connect battery negative cable.

INTAKE/EXHAUST VALVES & SEATS

DESCRIPTION

The valves are made of heat resistant steel and have chrome plated stems to prevent scuffing. Each valve is actuated by a roller rocker arm which pivots on a stationary lash adjuster. All valves use three bead lock keepers to retain the springs and promote valve rotation.

INTAKE/EXHAUST VALVES & SEATS (Continued)

STANDARD PROCEDURE—REFACING

NOTE: Valve seats that are worn or burned can be reworked, provided that correct angle and seat width are maintained. Otherwise the cylinder head must be replaced.

NOTE: When refacing valves and valve seats, it is important that the correct size valve guide pilot be used for reseating stones. A true and complete surface must be obtained.

(1) Using a suitable dial indicator measure the center of the valve seat Total run out must not exceed 0.051 mm (0.002 in).

(2) Apply a small amount of Prussian blue to the valve seat, insert the valve into the cylinder head, while applying light pressure on the valve rotate the valve. Remove the valve and examine the valve face. If the blue is transferred below the top edge of the valve face, lower the valve seat using a 15 degree stone. If the blue is transferred to the bottom edge of the valve face, raise the valve seat using a 65 degree stone.

(3) When the seat is properly positioned the width of the intake seat must be 1.75 – 2.36 mm (0.0689 – 0.0928 in.) and the exhaust seat must be 1.71 – 2.32 mm (0.0673 – 0.0911 in.).

(4) Check the valve spring installed height after refacing the valve and seat. The installed height for both intake and exhaust valve springs must not exceed 41.44 mm (1.6315 in.) .

(5) The valve seat and valve face must maintain a face angle of 44.5 – 45 degrees angle (Fig. 39).

REMOVAL

NOTE: The cylinder heads must be removed in order to preform this procedure.

(1) Using Special Tool 8516 Valve Spring Compressor, remove the rocker arms and the hydraulic lash adjusters (Fig. 40).

(2) Remove the camshaft bearing caps and the camshaft.

NOTE: All eight valve springs and valves are removed in the same manner; this procedure only covers one valve and valve spring.

(3) Using Special Tool C-3422–B or C-3422–C Valve Spring Compressor and Special tool 8519 Adapter, compress the valve spring.

NOTE: It may be necessary to tap the top of the valve spring to loosen the spring retainers locks enough to be removed.

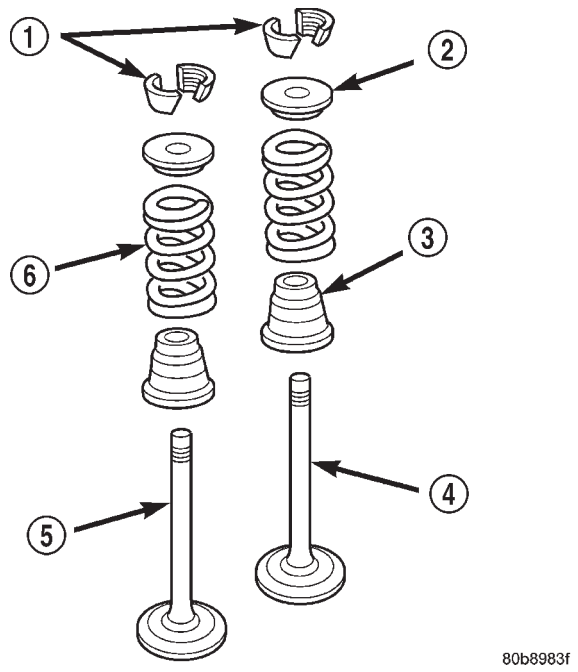

Fig. 39 Valve Assembly Configuration

1 - VALVE LOCKS (3–BEAD)
2 - RETAINER
3 - VALVE STEM OIL SEAL
4 - INTAKE VALVE
5 - EXHAUST VALVE
6 - VALVE SPRING

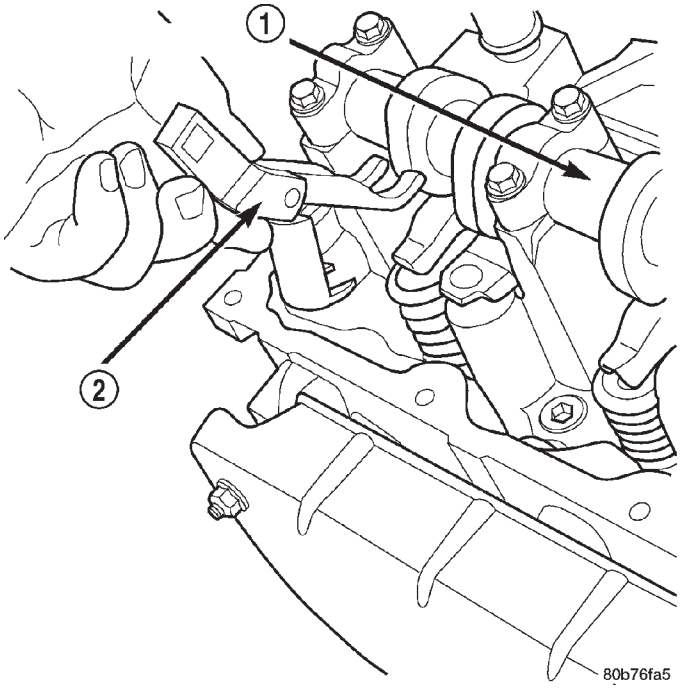

Fig. 40 Rocker Arm Removal

1 - CAMSHAFT
2 - SPECIAL TOOL 8516

INTAKE/EXHAUST VALVES & SEATS (Continued)

(4) Remove the two spring retainer lock halves.

NOTE: the valve spring is under tension use care when releasing the valve spring compressor.

(5) Remove the valve spring compressor.
(6) Remove the spring retainer, and the spring.

NOTE: Check for sharp edges on the keeper grooves. Remove any burrs from the valve stem before removing the valve from the cylinder head.

(7) Remove the valve from the cylinder head.

NOTE: The valve stem seals are common between intake and exhaust.

(8) Remove the valve stem seal. Mark the valve for proper installation.

TESTING VALVE SPRINGS

NOTE: Whenever the valves are removed from the cylinder head it is recommended that the valve springs be inspected and tested for reuse.

Inspect the valve springs for physical signs of wear or damage. Turn table of tool C-647 until surface is in line with the 40.69 mm (1.602 in.) mark on the threaded stud and the zero mark on the front. Place spring over the stud on the table and lift compressing lever to set tone device. Pull on torque wrench until Ping is heard. Take reading on torque wrench at this instant. Multiply this reading by two. This will give the spring load at test length. Fractional measurements are indicated on the table for finer adjustments. Refer to Specifications Section to obtain specified height and allowable tensions. Replace any springs that do not meet specifications. (Fig. 41)

INSTALLATION

(1) coat the valve stem with clean engine oil and insert it into the cylinder head.
(2) Install the valve stem seal. make sure the seal is fully seated and that the garter spring at the top of the seal is intact.
(3) Install the spring and the spring retainer (Fig. 42).
(4) Using the valve spring compressor, compress the spring and install the two valve spring retainer halves.
(5) Release the valve spring compressor and make sure the two spring retainer halves and the spring retainer are fully seated.
(6) lubricate the camshaft journal with clean engine oil then Position the camshaft (with the sprocket dowel on the left camshaft at 11 o'clock and the right camshaft at 12 o'clock), then position the camshaft bearing caps.

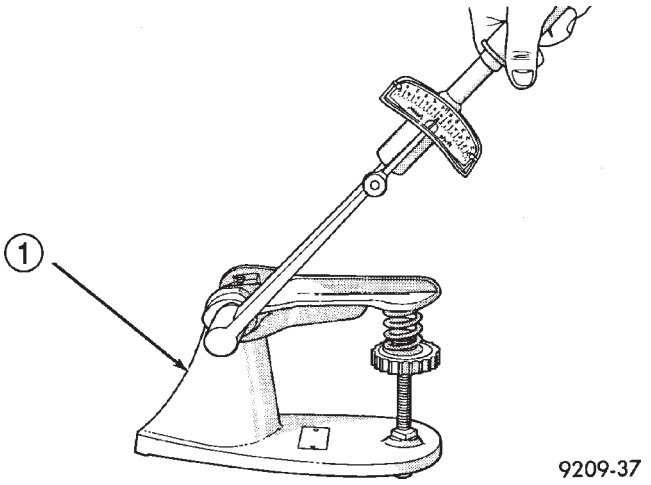

Fig. 41 Testing Valve Springs

1 - SPECIAL TOOL C-647

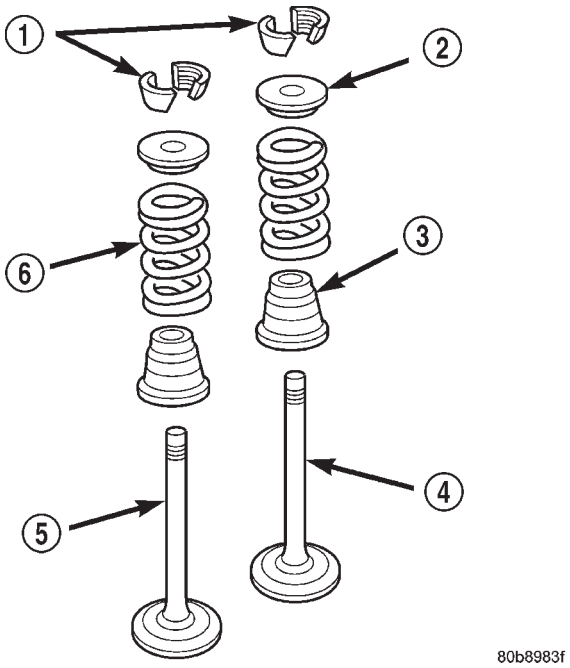

Fig. 42 Valve Assembly Configuration

1 - VALVE LOCKS (3–BEAD)
2 - RETAINER
3 - VALVE STEM OIL SEAL
4 - INTAKE VALVE
5 - EXHAUST VALVE
6 - VALVE SPRING

INTAKE/EXHAUST VALVES & SEATS (Continued)

(7) Install the camshaft bearing cap retaining bolts. Tighten the bolts 9–13 N·m (100 in. lbs.) in ½ turn increments in the sequence shown (Fig. 43).

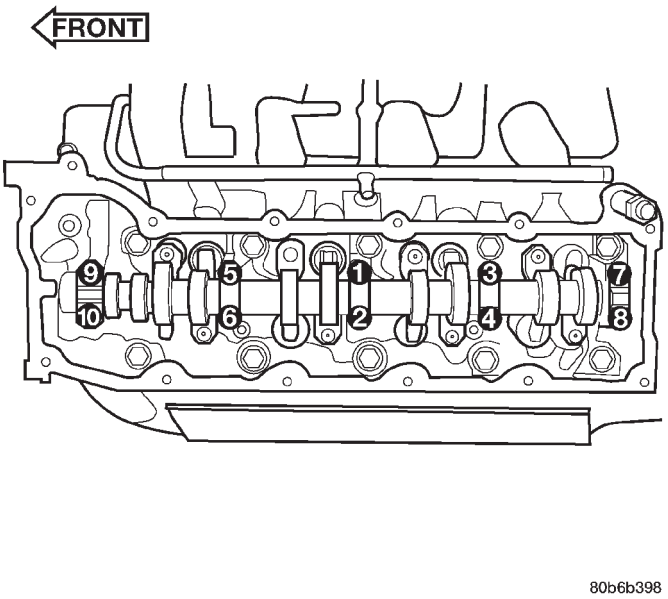

Fig. 43 Camshaft Bearing Caps Tightening Sequence

(8) Position the hydraulic lash adjusters and rocker arms (Fig. 24).

ROCKER ARM / ADJUSTER ASSEMBLY

DESCRIPTION

The rocker arms are steel stampings with an integral roller bearing. The rocker arms incorporate a 2.8 mm (0.11 inch) oil hole in the lash adjuster socket for roller and camshaft lubrication.

REMOVAL

NOTE: Disconnect the battery negative cable to prevent accidental starter engagement.

(1) Remove the cylinder head cover. Refer to Cylinder Head Cover in this section.

(2) For rocker arm removal on cylinders 3 and 5 Rotate the crankshaft until cylinder #1 is at TDC exhaust stroke.

(3) For rocker arm removal on cylinders 2 and 8 Rotate the crankshaft until cylinder #1 is at TDC compression stroke.

(4) For rocker arm removal on cylinders 4 and 6 Rotate the crankshaft until cylinder #3 is at TDC compression stroke.

(5) For rocker arm removal on cylinders 1 and 7 Rotate the crankshaft until cylinder #2 is at TDC compression stroke.

(6) Using special tool 8516 press downward on the valve spring, remove rocker arm (Fig. 44).

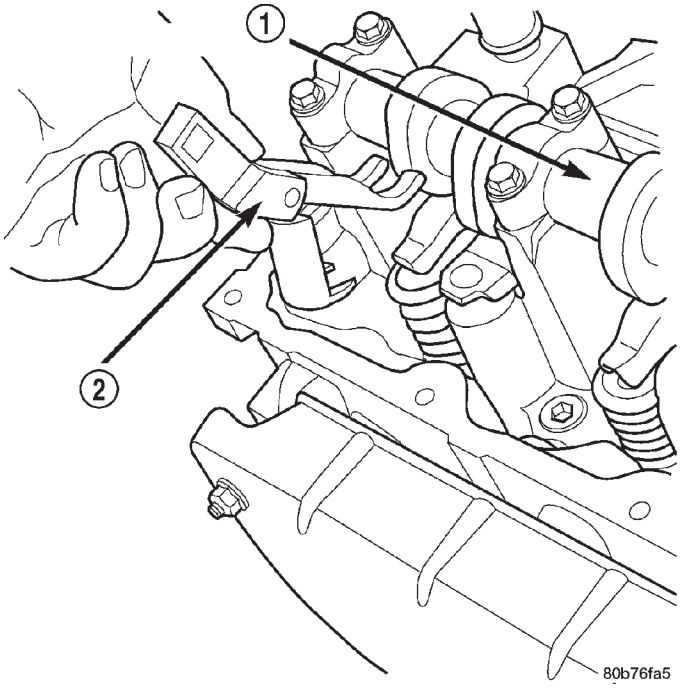

Fig. 44 Rocker Arm—Removal

1 - CAMSHAFT
2 - SPECIAL TOOL 8516

INSTALLATION

CAUTION: Make sure the rocker arms are installed with the concave pocket over the lash adjusters. Failure to do so may cause severe damage to the rocker arms and/or lash adjusters.

NOTE: Coat the rocker arms with clean engine oil prior to installation.

(1) For rocker arm installation on cylinders 3 and 5 Rotate the crankshaft until cylinder #1 is at TDC exhaust stroke.

(2) For rocker arm installation on cylinders 2 and 8 Rotate the crankshaft until cylinder #1 is at TDC compression stroke.

(3) For rocker arm installation on cylinders 4 and 6 Rotate the crankshaft until cylinder #3 is at TDC compression stroke.

ROCKER ARM / ADJUSTER ASSEMBLY (Continued)

(4) For rocker arm installation on cylinders 1 and 7 Rotate the crankshaft until cylinder #2 is at TDC compression stroke.

(5) Using special tool 8516 press downward on the valve spring, install rocker arm (Fig. 28).

(6) Install the cylinder head cover.

VALVE SPRINGS

DESCRIPTION

The valve springs are made from high strength chrome silicon steel. The springs are common for intake and exhaust applications. The valve spring seat is integral with the valve stem seal, which is a positive type seal to control lubrication.

VALVE STEM SEALS

DESCRIPTION

The valve stem seals are made of rubber and incorporate an integral steel valve spring seat. The integral garter spring maintains consistent lubrication control to the valve stems.

ENGINE BLOCK

DESCRIPTION

The cylinder block is made of cast iron. The block is a closed deck design with the left bank forward. To provide high rigidity and improved NVH an enhanced compacted graphite bedplate is bolted to the block. The block design allows coolant flow between the cylinders bores, and an internal coolant bypass to a single poppet inlet thermostat is included in the cast aluminum front cover.

STANDARD PROCEDURE—CYLINDER BORE HONING

Before honing, stuff plenty of clean shop towels under the bores and over the crankshaft to keep abrasive materials from entering the crankshaft area.

(1) Used carefully, the Cylinder Bore Sizing Hone C-823, equipped with 220 grit stones, is the best tool for this job. In addition to deglazing, it will reduce taper and out-of-round, as well as removing light scuffing, scoring and scratches. Usually, a few strokes will clean up a bore and maintain the required limits.

CAUTION: DO NOT use rigid type hones to remove cylinder wall glaze.

(2) Deglazing of the cylinder walls may be done if the cylinder bore is straight and round. Use a cylinder surfacing hone, Honing Tool C-3501, equipped with 280 grit stones (C-3501-3810). about 20-60 strokes, depending on the bore condition, will be sufficient to provide a satisfactory surface. Using honing oil C-3501-3880, or a light honing oil, available from major oil distributors.

CAUTION: DO NOT use engine or transmission oil, mineral spirits, or kerosene.

(3) Honing should be done by moving the hone up and down fast enough to get a crosshatch pattern. The hone marks should INTERSECT at 50° to 60° for proper seating of rings (Fig. 45).

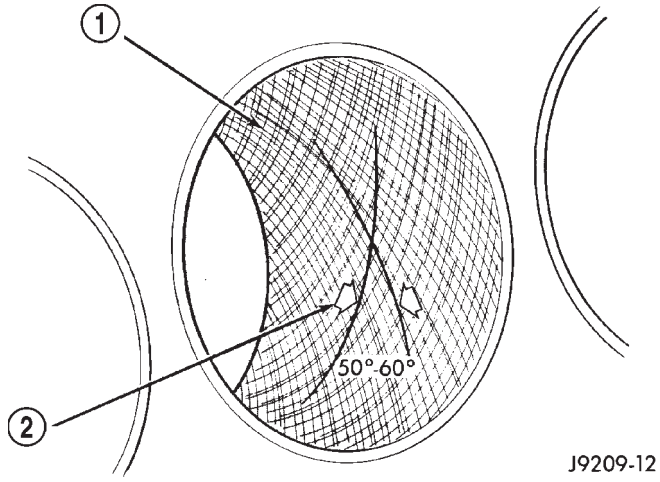

Fig. 45 Cylinder Bore Crosshatch Pattern

1 - CROSSHATCH PATTERN
2 - INTERSECT ANGLE

(4) A controlled hone motor speed between 200 and 300 RPM is necessary to obtain the proper crosshatch angle. The number of up and down strokes per minute can be regulated to get the desired 50° to 60° angle. Faster up and down strokes increase the crosshatch angle.

(5) After honing, it is necessary that the block be cleaned to remove all traces of abrasive. Use a brush to wash parts with a solution of hot water and detergent. Dry parts thoroughly. Use a clean, white, lint-free cloth to check that the bore is clean. Oil the bores after cleaning to prevent rusting.

CLEANING

Thoroughly clean the oil pan and engine block gasket surfaces.

Use compressed air to clean out:

- The galley at the oil filter adaptor hole.
- The front and rear oil galley holes.
- The feed holes for the crankshaft main bearings.

ENGINE BLOCK (Continued)

Once the block has been completely cleaned, apply Loctite PST pipe sealant with Teflon 592 to the threads of the front and rear oil galley plugs. Tighten the plugs to 34 N·m (25 ft. lbs.) torque.

INSPECTION

(1) It is mandatory to use a dial bore gauge to measure each cylinder bore diameter. To correctly select the proper size piston, a cylinder bore gauge, capable of reading in 0.003 mm (.0001 in.) INCREMENTS is required. If a bore gauge is not available, do not use an inside micrometer (Fig. 46).

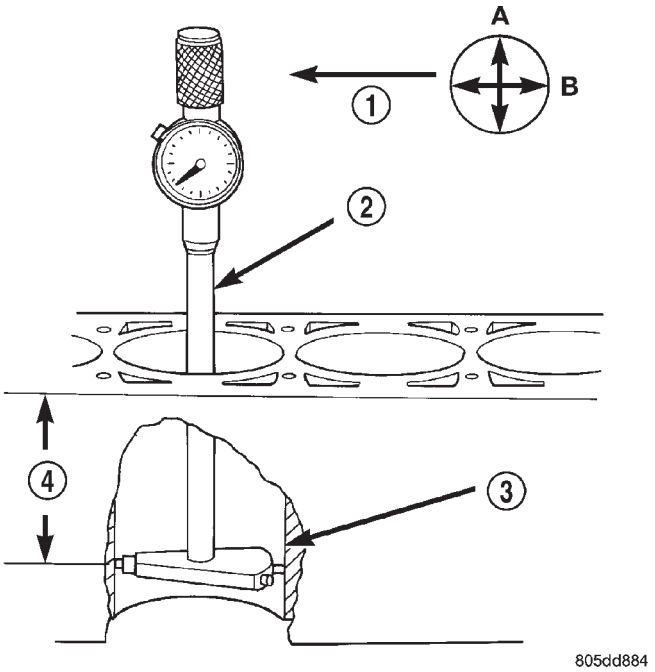

Fig. 46 Bore Gauge—Typical

1 - FRONT
2 - BORE GAUGE
3 - CYLINDER BORE
4 - 49.5 MM (1–15/16 in)

(2) Measure the inside diameter of the cylinder bore at three levels below top of bore. Start perpendicular (across or at 90 degrees) to the axis of the crankshaft and then take two additional reading.

(3) Measure the cylinder bore diameter crosswise to the cylinder block near the top of the bore. Repeat the measurement near the middle of the bore, then repeat the measurement near the bottom of the bore.

(4) Determine taper by subtracting the smaller diameter from the larger diameter.

(5) Rotate measuring device 90° and repeat steps above.

(6) Determine out-of-roundness by comparing the difference between each measurement.

(7) If cylinder bore taper does not exceed 0.025 mm (0.001 inch) and out-of-roundness does not exceed 0.025 mm (0.001 inch), the cylinder bore can be honed. If the cylinder bore taper or out- of-round condition exceeds these maximum limits, the cylinder block must be replaced. A slight amount of taper always exists in the cylinder bore after the engine has been in use for a period of time.

CONNECTING ROD BEARINGS

STANDARD PROCEDURE—CONNECTING ROD BEARING FITTING

Inspect the connecting rod bearings for scoring and bent alignment tabs (Fig. 47) (Fig. 48). Check the bearings for normal wear patterns, scoring, grooving, fatigue and pitting (Fig. 49). Replace any bearing that shows abnormal wear.

Inspect the connecting rod journals for signs of scoring, nicks and burrs.

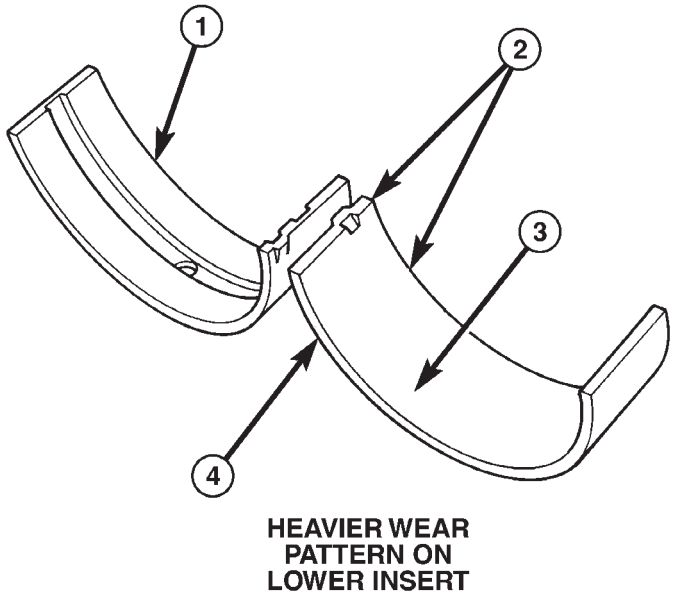

Fig. 47 Connecting Rod Bearing Inspection

1 - UPPER BEARING HALF
2 - MATING EDGES
3 - GROOVES CAUSED BY ROD BOLTS SCRATCHING JOURNAL DURING INSTALLATION
4 - WEAR PATTERN — ALWAYS GREATER ON UPPER BEARING
5 - LOWER BEARING HALF

Misaligned or bent connecting rods can cause abnormal wear on pistons, piston rings, cylinder walls, connecting rod bearings and crankshaft connecting rod journals. If wear patterns or damage to

CONNECTING ROD BEARINGS (Continued)

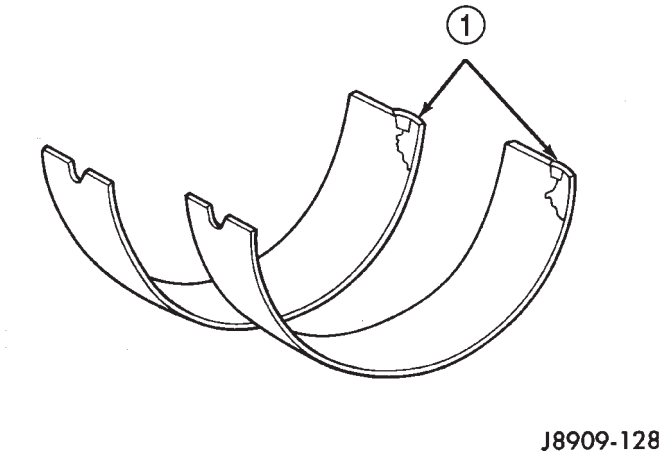

Fig. 48 Locking Tab Inspection

1 - ABNORMAL CONTACT AREA CAUSED BY LOCKING TABS NOT FULLY SEATED OR BEING BENT

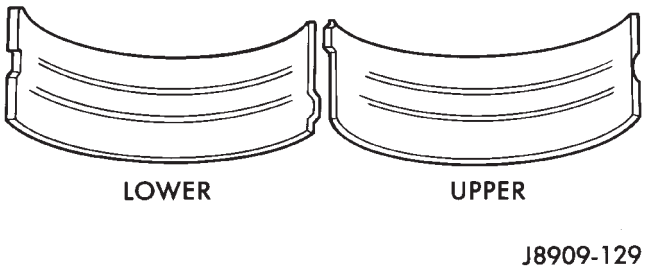

Fig. 49 Scoring Caused by Insufficient Lubrication or Damaged Crankshaft Journal

any of these components indicate the probability of a misaligned connecting rod, inspect it for correct rod alignment. Replace misaligned, bent or twisted connecting rods.

(1) Wipe the oil from the connecting rod journal.

(2) Lubricate the upper bearing insert and install in connecting rod.

(3) Use piston ring compressor and Guide Pins Special Tool 8507 (Fig. 50) to install the rod and piston assemblies. The oil slinger slots in the rods must face front of the engine. The “F” ’s near the piston wrist pin bore should point to the front of the engine.

(4) Install the lower bearing insert in the bearing cap. The lower insert must be dry. Place strip of Plastigage across full width of the lower insert at the center of bearing cap. Plastigage must not crumble in use. If brittle, obtain fresh stock.

(5) Install bearing cap and connecting rod on the journal and tighten bolts to 27 N·m (20 ft. lbs.) plus a 90° turn. DO NOT rotate crankshaft. Plastigage will smear, resulting in inaccurate indication.

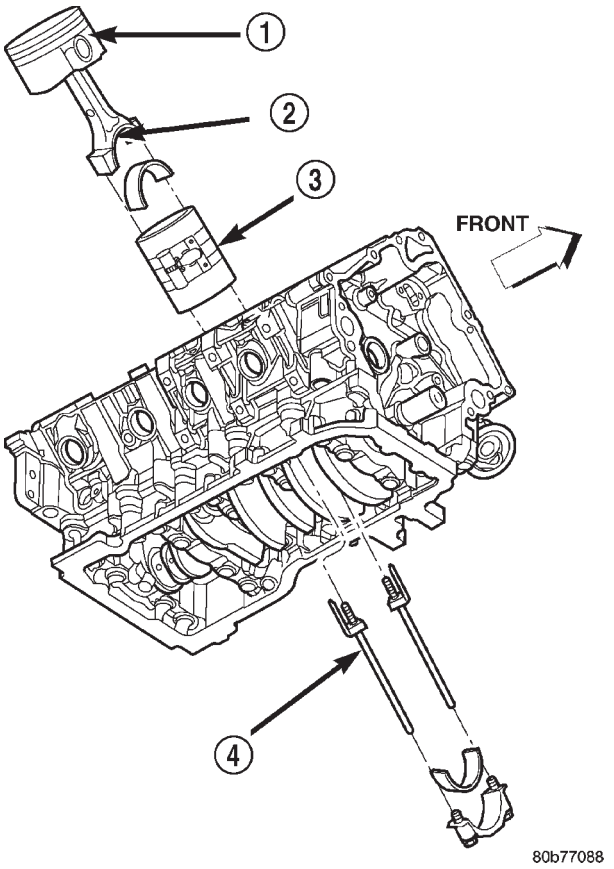

Fig. 50 Piston and Connecting Rod—Installation

1 - “F” TOWARD FRONT OF ENGINE
2 - OIL SLINGER SLOT
3 - RING COMPRESSOR
4 - SPECIAL TOOL 8507

(6) Remove the bearing cap and determine amount of bearing-to-journal clearance by measuring the width of compressed Plastigage (Fig. 51). Refer to Engine Specifications for the proper clearance. **Plastigage should indicate the same clearance across the entire width of the insert. If the clearance varies, it may be caused by either a tapered journal, bent connecting rod or foreign material trapped between the insert and cap or rod.**

(7) If the correct clearance is indicated, replacement of the bearing inserts is not necessary. Remove the Plastigage from crankshaft journal and bearing insert. Proceed with installation.

(8) If bearing-to-journal clearance exceeds the specification, determin which services bearing set to use the bearing sizes are as follows:

CONNECTING ROD BEARINGS (Continued)

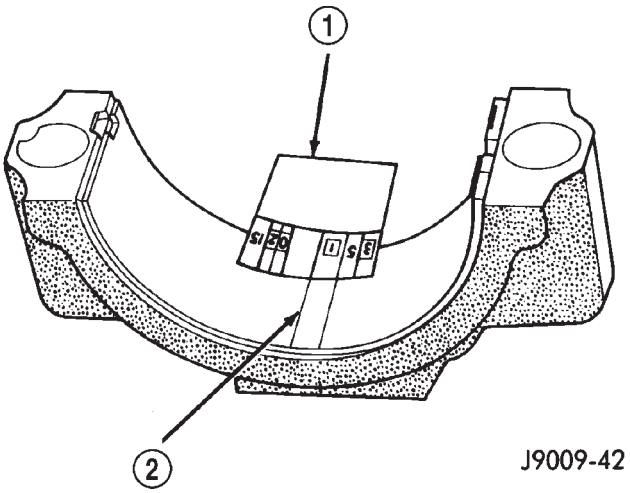

Fig. 51 Measuring Bearing Clearance with Plastigage

1 - PLASTIGAGE SCALE
2 - COMPRESSED PLASTIGAGE

Bearing Mark	SIZE	USED WITH JOURNAL SIZE
.025 US	.025 mm (.001 in.)	50.983-50.967 mm (2.0073-2.0066 in.)
Std.	STANDARD	50.992-51.008 mm (2.0076-2.0082 in.)
.250 US	.250 mm (.010 in.)	50.758-50.742 mm (1.9984-1.9978 in.)

(9) Repeat the Plastigage measurement to verify your bearing selection prior to final assembly.

(10) Once you have selected the proper insert, install the insert and cap. Tighten the connecting rod bolts to 27 N·m (20 ft. lbs.) plus a 90° turn.

Slide snug-fitting feeler gauge between the connecting rod and crankshaft journal flange (Fig. 52). Refer to Engine Specifications for the proper clearance. Replace the connecting rod if the side clearance is not within specification.

CRANKSHAFT

DESCRIPTION

The crankshaft is constructed of nodular cast iron. The crankshaft is a crosshaped four throw design with eight counterweights for balancing purposes. The crankshaft is supported by five select fit main bearings with the number three serving as the thrust washer location. The main journals of the crankshaft

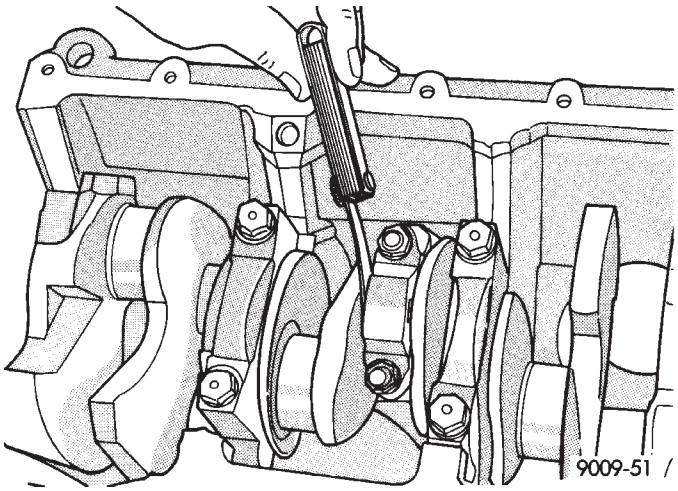

Fig. 52 Checking Connecting Rod Side Clearance—Typical

are cross drilled to improve rod bearing lubrication. The number eight counterweight has provisions for crankshaft position sensor target wheel mounting. The select fit main bearing markings are located on the rear side of the target wheel. The crankshaft oil seals are one piece design. The front oil seal is retained in the timing chain cover, and the rear seal is pressed in to a bore formed by the cylinder block and the bedplate assembly.

STANDARD PROCEDURE - CRANKSHAFT END PLAY

(1) Mount a dial indicator to front of engine with the locating probe on nose of crankshaft (Fig. 53).

(2) Move crankshaft all the way to the rear of its travel.

(3) Zero the dial indicator.

(4) Move crankshaft all the way to the front and read the dial indicator. (Refer to 9 - ENGINE - SPECIFICATIONS) for end play specification.

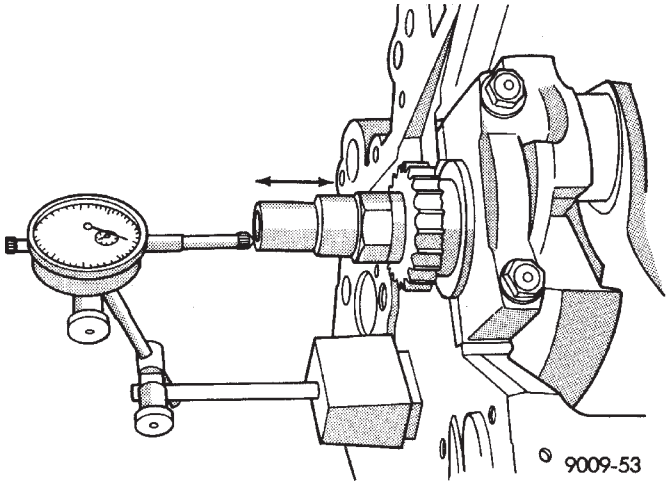

Fig. 53 Checking Crankshaft End Play—Typical

CRANKSHAFT (Continued)

REMOVAL

NOTE: To remove the crankshaft from the engine, the engine must be removed from the vehicle.

(1) Remove the engine. (Refer to 9 - ENGINE - REMOVAL).
(2) Remove the engine oil pump.(Refer to 9 - ENGINE/LUBRICATION/OIL PUMP - REMOVAL).

CAUTION: DO NOT pry on the oil pan gasket when removing the oil pan, The oil pan gasket is mounted to the cylinder block in three locations and will remain attached to block when removing oil pan. Gasket can not be removed with oil pan.

(3) Remove oil pan. (Refer to 9 - ENGINE/LUBRICATION/OIL PAN - REMOVAL).
(4) Remove the oil pump pickup tube and oil pan gasket /windage tray.
(5) Remove the bedplate mounting bolts. Note the location of the three stud bolts for installation.
(6) Remove the connecting rods from the crankshaft.

CAUTION: The bedplate to cylinder block mating surface is a critical sealing surface. Do not pry on or damage this surface in anyway.

NOTE: The bedplate contains the lower main bearing halves. Use care when handling bedplate as not to drop or damage bearing halves. Installing main bearing halves in the wrong position will cause sever damage to the crankshaft.

NOTE: The bedplate has pry points cast into it. Use these points only. The pry points are on both the left and right sides, only the left side is shown.

(7) Carefully pry on the pry points (Fig. 54) to loosen the bedplate then remove the bedplate.

CAUTION: When removing the crankshaft, use care not to damage bearing surfaces on the crankshaft.

(8) Remove the crankshaft.
(9) Remove the crankshaft target wheel.

INSPECTION

NOTE: Thoroughly inspect the connecting rod bearing bores and main bearing bores for scoring, blueing or severe scratches. Further disassembly may be required.

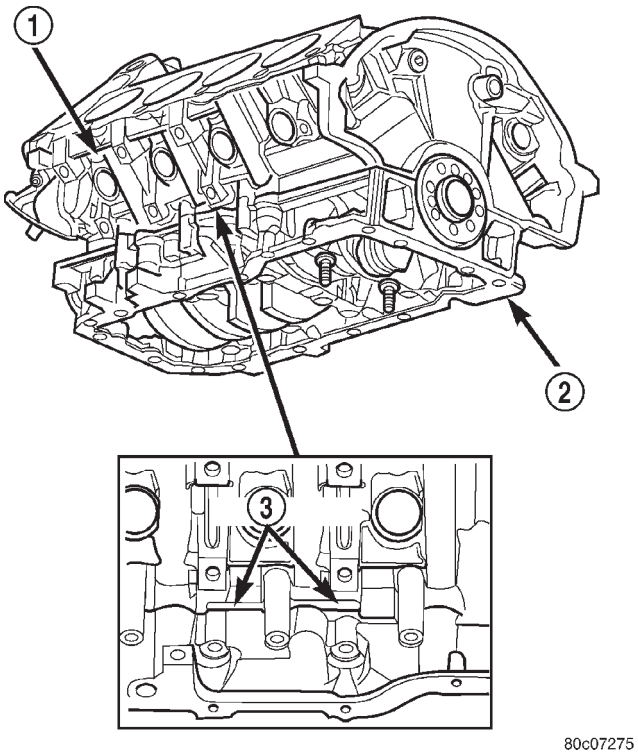

Fig. 54 Bedplate Pry Point Location

1 - CYLINDER BLOCK
2 - BEDPLATE
3 - PRY POINT

If connecting rod bearing bores show damage, the cylinder heads must be removed to service the piston and rod assemblies. If the bedplate or the cylinder block main bearing bores show damage the engine must be replaced.

(1) If required, remove the main bearing halves from the cylinder block and bedplate.
(2) Thoroughly clean the bedplate to cylinder block sealing surfaces and main bearing bores. Remove all oil and sealant residue.
(3) Inspect the bedplate main bearing bores for cracks, scoring or severe blueing. If either condition exists the engine must be replaced.
(4) Inspect the crankshaft thrust washer for scoring, scratches or blueing. If either condition exist replace the thrust washer.
(5) Inspect the oil pan gasket/windage tray for splits, tears or cracks in the gasket sealing surfaces. Replace gasket as necessary.

INSTALLATION

CAUTION: Main bearings are select fit. (Refer to 9 - ENGINE/ENGINE BLOCK/CRANKSHAFT MAIN BEARINGS - STANDARD PROCEDURE) for proper bearing selections.

CRANKSHAFT (Continued)

(1) Lubricate upper main bearing halves with clean engine oil.

CAUTION: When installing crankshaft, use care not to damage bearing surfaces on the crankshaft.

NOTE: Apply sealant to the target wheel retaining screws prior to installation.

(2) Install the crankshaft target wheel. Torque the mounting screws to 22 N·m (21 ft. lbs.).
(3) Position crankshaft in cylinder block.
(4) Install the thrust washers (Fig. 55).

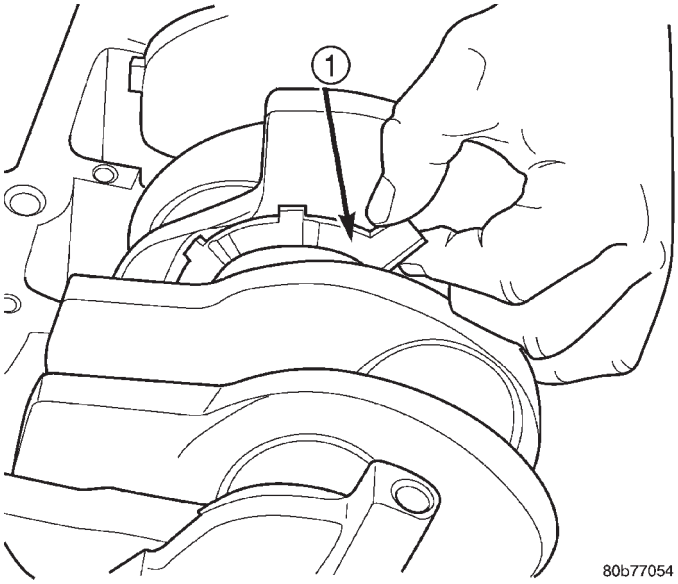

Fig. 55 Crankshaft Thrust Washer Installation

1 - CRANKSHAFT THRUST WASHER

CAUTION: The bedplate to cylinder block mateing surface must be coated with sealant prior to installation. Failure to do so will cause severe oil leaks.

NOTE: The installation time to install the bedplate after the sealant has been applied is critical.

NOTE: Make sure that the bedplate and cylinder block sealing surfaces are clean and free of oil or other contaminants. Contaminants on the sealing surfaces may cause main bearing distortion and/or oil leaks.

(5) Apply a 2.5mm (0.100 inch) (Fig. 56) bead of Mopar® Gen II Silicone Rubber Adhesive sealant to the cylinder block-to-bedplate mating surface as shown (Fig. 57).

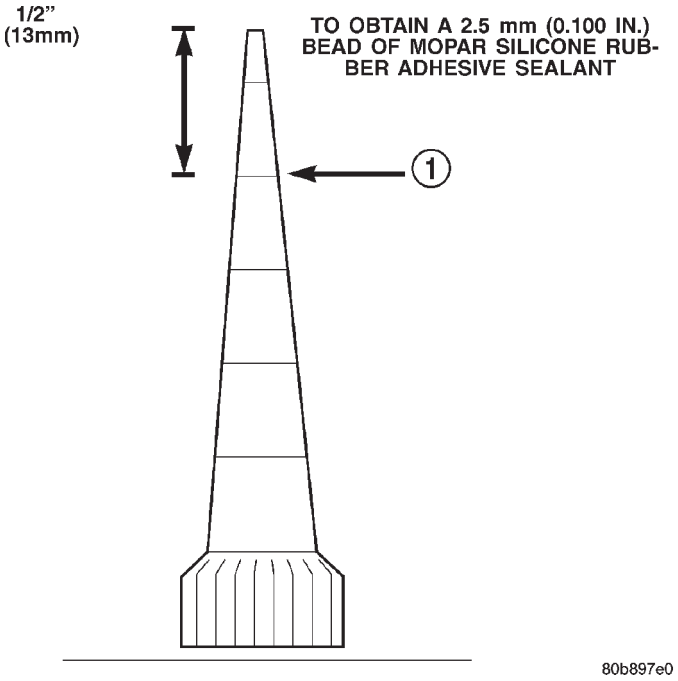

Fig. 56 Cutting Aplicator to Achieve 2.5mm (0.100 in.) Bead

1 - CUT HERE

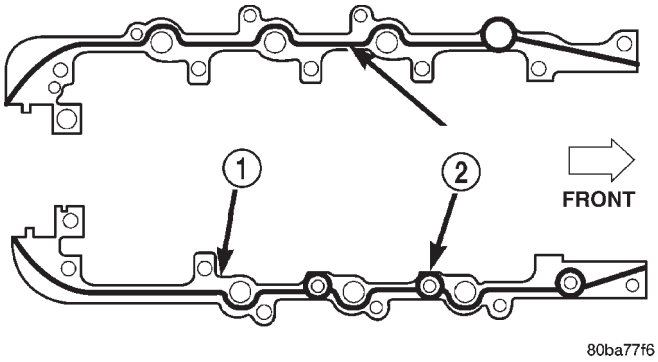

Fig. 57 Cylinder Block-to-Bedplate Sealent Bead Location

1 - CYLINDER BLOCK
2 - SEALANT BEAD LOCATION

(6) Coat the crankshaft main bearing journals with clean engine oil and position the bedplate onto the cylinder block.

NOTE: Lubricate the bedplate retaining bolts with clean engine oil prior to installation.

(7) Install the bedplate retaining bolts, making sure to place the stud bolts in the correct location, Torque the bolts in the sequence shown (Fig. 58).

- Tighten bolts **A – L** to 54 N·m (40 ft. lbs.)
- Tighten bolts **1–10** to 2.8 N·m (25 in. lbs.)
- Turn bolts **1–10** an additional 90°.

CRANKSHAFT (Continued)

- Tighten bolts **A1– A6** to 27 N·m (20 ft. lbs.)

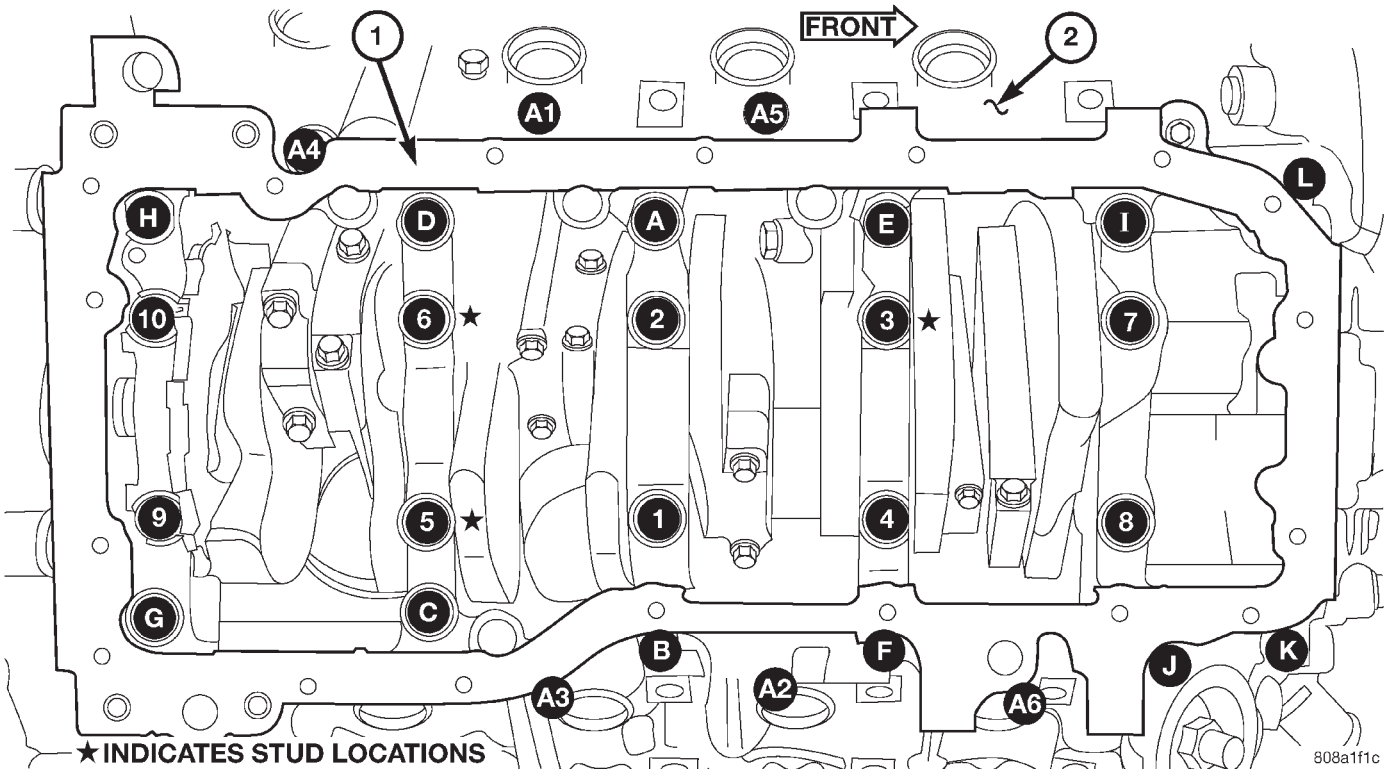

Fig. 58 Bedplate Tightening Sequence

1 - BEDPLATE
2 - CYLINDER BLOCK

(8) Measure crankshaft end play. (Refer to 9 - ENGINE/ENGINE BLOCK/CRANKSHAFT - STANDARD PROCEDURE).

(9) Install the connecting rods and measure side clearance. (Refer to 9 - ENGINE/ENGINE BLOCK/CONNECTING ROD BEARINGS - STANDARD PROCEDURE).

(10) Position the oil pan gasket/windage tray, using a new o-ring, install the oil pickup tube. Torque the bolt to 28N·n (20 ft. lbs.) torque the nuts to 28N·m (20 ft. lbs.).

(11) Install the oil pan. Torque the retaining bolts to 15 N·m (11 ft. lbs.) in the sequence shown (Fig. 59).

(12) Install the engine (Refer to 9 - ENGINE - INSTALLATION).

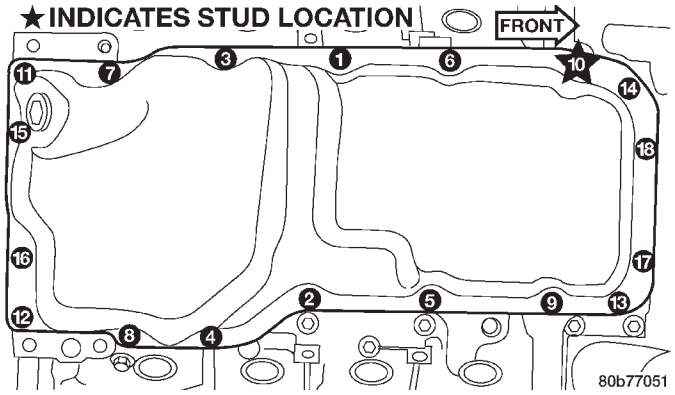

Fig. 59 Oil Pan Tightening Sequence

CRANKSHAFT MAIN BEARINGS

STANDARD PROCEDURE—CRANKSHAFT MAIN BEARING - FITTING

MAIN BEARING JOURNAL DIAMETER (CRANKSHAFT REMOVED)

Crankshaft removed from the cylinder block.

Clean the oil off the main bearing journal.

Determine the maximum diameter of the journal with a micrometer. Measure at two locations 90° apart at each end of the journal.

The maximum allowable taper is 0.008mm (0.0004 inch.) and maximum out of round is 0.005mm (0.002 inch). Compare the measured diameter with the journal diameter specification (Main Bearing Fitting Chart). Select inserts required to obtain the specified bearing-to-journal clearance.

CRANKSHAFT MAIN BEARING SELECTION

The main bearings are “select fit” to achieve proper oil clearances. For main bearing selection, the crankshaft position sensor target wheel has grade identification marks stamped into it (Fig. 60). These marks are read from left to right, corresponding with journal number 1, 2, 3, 4 and 5. The crankshaft position sensor target wheel is mounted to the number 8 counter weight on the crankshaft.

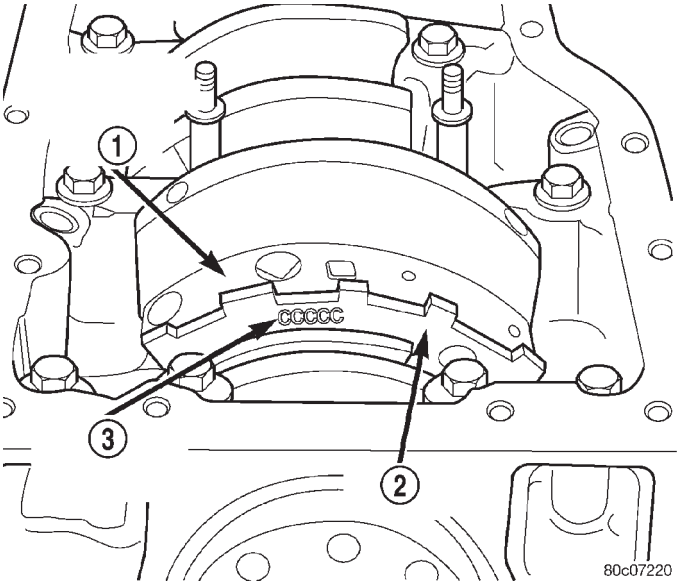

Fig. 60 Main Bearing Markings on Target Wheel

1 - REARMOST CRANKSHAFT COUNTER WEIGHT
2 - TARGET WHEEL
3 - MAIN BEARING SELECT FIT MARKINGS

NOTE: Service main bearings are coded. These codes identify what size (grade) the bearing is.

MAIN BEARING SELECTION CHART—4.7L

GRADE MARKING	SIZE mm (in.)	FOR USE WITH JOURNAL SIZE
A	0.008 mm U/S (0.0004 in.) U/S	63.488–63.496 mm (2.4996–2.4999 in.)
B	NOMINAL	63.496–63.504 mm (2.4999–2.5002 in.)
C	0.008 mm O/S (0.0004 in.) O/S	63.504–63.512 mm (2.5002–2.5005 in.)

INSPECTION

Wipe the inserts clean and inspect for abnormal wear patterns and for metal or other foreign material imbedded in the lining. Normal main bearing insert wear patterns are illustrated (Fig. 61).

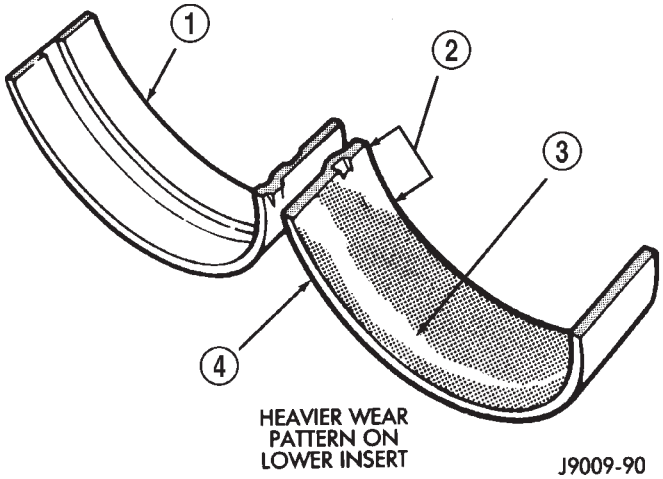

Fig. 61 Main Bearing Wear Patterns

1 - UPPER INSERT
2 - NO WEAR IN THIS AREA
3 - LOW AREA IN BEARING LINING
4 - LOWER INSERT

NOTE: If any of the crankshaft journals are scored, the crankshaft must be repaired or replaced.

Inspect the back of the inserts for fractures, scrapings or irregular wear patterns.

Inspect the upper insert locking tabs for damage.

CRANKSHAFT MAIN BEARINGS (Continued)

Replace all damaged or worn bearing inserts.

CRANKSHAFT OIL SEAL - FRONT

REMOVAL

(1) Disconnect negative cable from battery.

(2) Remove accessory drive belt (Refer to 7 - COOLING/ACCESSORY DRIVE/DRIVE BELTS - REMOVAL).

(3) Remove A/C compressor mouning fasteners and set aside.

(4) Drain cooling system (Refer to 7 - COOLING - STANDARD PROCEDURE).

(5) Remove upper radiator hose.

(6) Disconnect electrical connector for fan mounted inside radiator shroud.

(7) Remove radiator shroud attaching fasteners.

NOTE: Transmission cooler line snaps into shroud lower right hand corner.

(8) Remove radiator cooling fan and shroud (Refer to 7 - COOLING/ENGINE/RADIATOR FAN - REMOVAL).

(9) Remove crankshaft damper bolt.

(10) Remove damper using Special Tools 8513 Insert and 1026 Three Jaw Puller (Fig. 62).

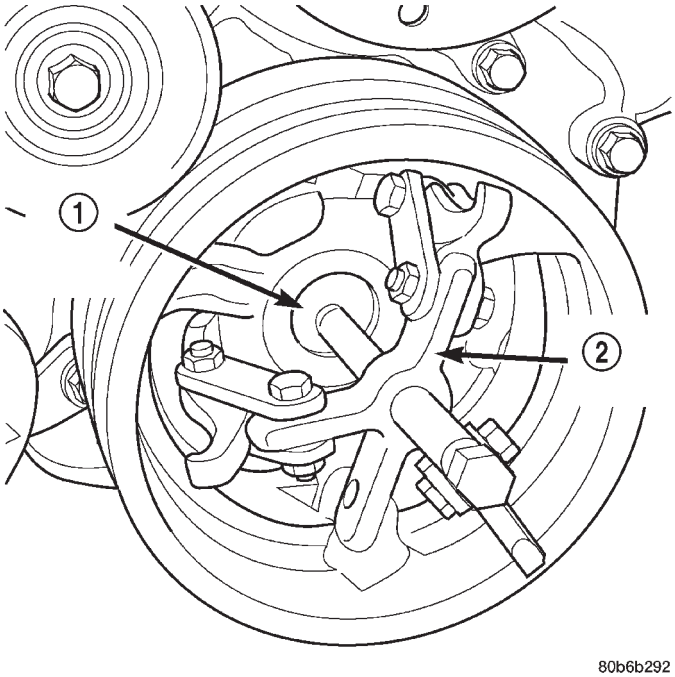

Fig. 62 Crankshaft Damper—Removal

1 - SPECIAL TOOL 8513 INSERT
2 - SPECIAL TOOL 1026

(11) Using Special Tool 8511, remove crankshaft front seal (Fig. 63).

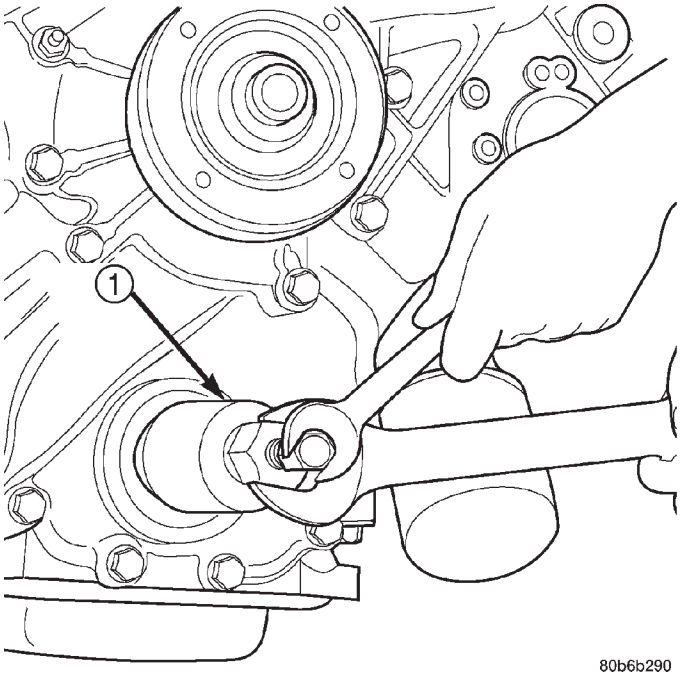

Fig. 63 Crankshaft Front Seal—Removal

1 - SPECIAL TOOL 8511

INSTALLATION

CAUTION: To prevent severe damage to the Crankshaft, Damper or Special Tool 8512, thoroughly clean the damper bore and the crankshaft nose before installing Damper.

CRANKSHAFT OIL SEAL - FRONT (Continued)

(1) Using Special Tool 8348 and 8512, install crankshaft front seal (Fig. 64).

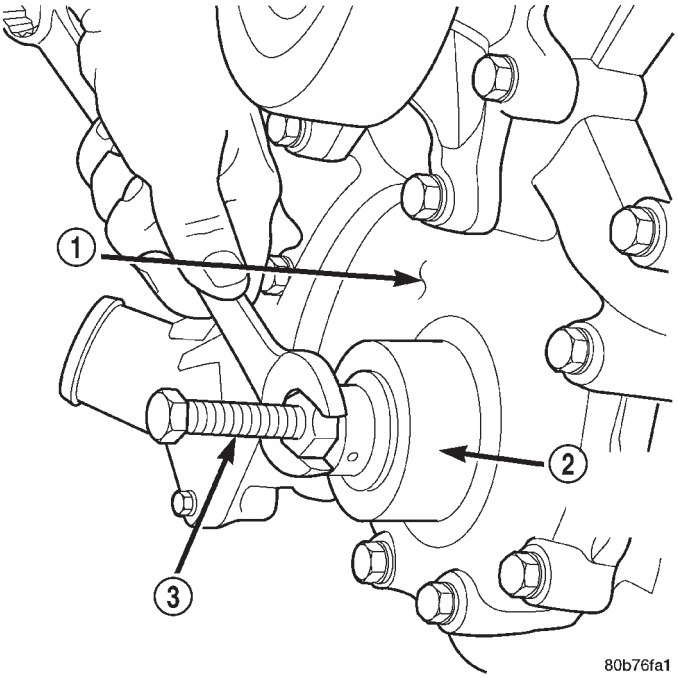

Fig. 64 Crankshaft Front Seal—Installation

1 - TIMING CHAIN COVER
2 - SPECIAL TOOL 8348
3 - SPECIAL TOOL 8512

(2) Install vibration damper (Refer to 9 - ENGINE/ENGINE BLOCK/VIBRATION DAMPER - INSTALLATION).

(3) Install radiator cooling fan and shroud (Refer to 7 - COOLING/ENGINE/RADIATOR FAN - INSTALLATION).

(4) Install upper radiator hose.

(5) Install A/C compressor and tighten fasteners to 54 N·m (40 ft. lbs.).

(6) Install accessory drive belt refer (Refer to 7 - COOLING/ACCESSORY DRIVE/DRIVE BELTS - INSTALLATION).

(7) Refill cooling system (Refer to 7 - COOLING - STANDARD PROCEDURE).

(8) Connect negative cable to battery.

CRANKSHAFT OIL SEAL - REAR

REMOVAL

NOTE: This procedure can be preformed in vehicle.

(1) If being preformed in vehicle, remove the transmission.

(2) Remove the flexplate (Refer to 9 - ENGINE/ENGINE BLOCK/FLEX PLATE - REMOVAL).

NOTE: The crankshaft oil seal CAN NOT be reused after removal.

NOTE: The crankshaft rear oil seal remover Special Tool 8506 must be installed deeply into the seal. Continue to tighten the removal tool into the seal until the tool can not be turned farther. Failure to install tool correctly the first time will cause tool to pull free of seal without removing seal from engine.

(3) Using Special Tool 8506 (Fig. 65), remove the crankshaft rear oil seal.

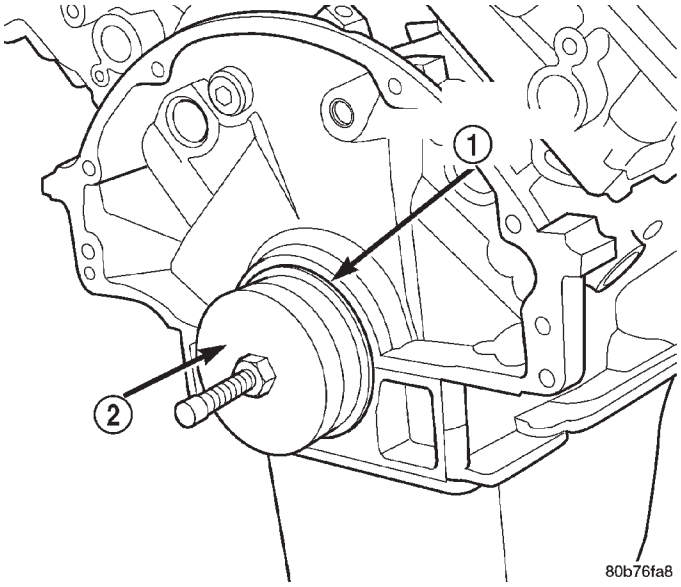

Fig. 65 Crankshaft Rear Oil Seal Removal

1 - REAR CRANKSHAFT SEAL
2 - SPECIAL TOOL 8506

INSTALLATION

(1) Position the magnetic seal guide Special Tool 8349–2 (Fig. 66) onto the crankshaft rear face. Then position the crankshaft rear oil seal onto the guide.

(2) Using Special Tools 8349 Crankshaft Rear Oil Seal Installer and C-4171 Driver Handle (Fig. 67), with a hammer, tap the seal into place. Continue to tap on the driver handle until the seal installer seats against the cylinder block crankshaft bore.

(3) Install the flexplate.

(4) If removed, install the transmission.

FLEX PLATE

REMOVAL

(1) Remove the transmission.

(2) Remove the bolts and flexplate.

FLEX PLATE (Continued)

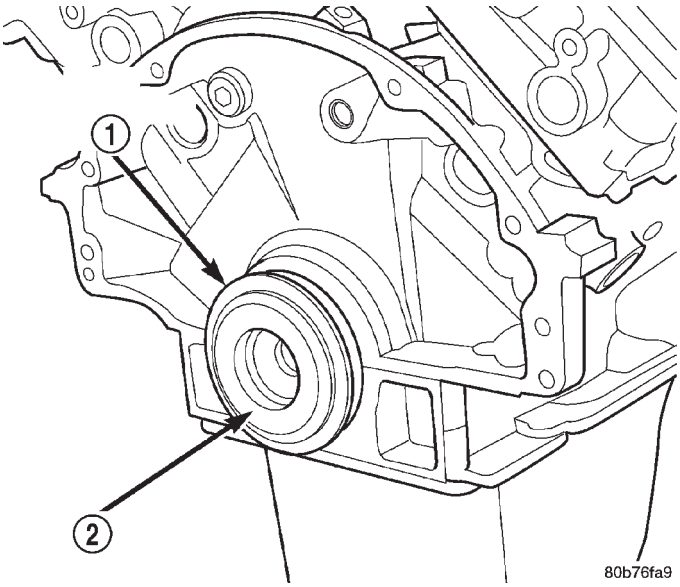

Fig. 66 Crankshaft Rear Oil Seal Guide Special Tool 8349–2 and Oil

1 - REAR CRANKSHAFT SEAL
2 - SPECIAL TOOL 8349–2 GUIDE

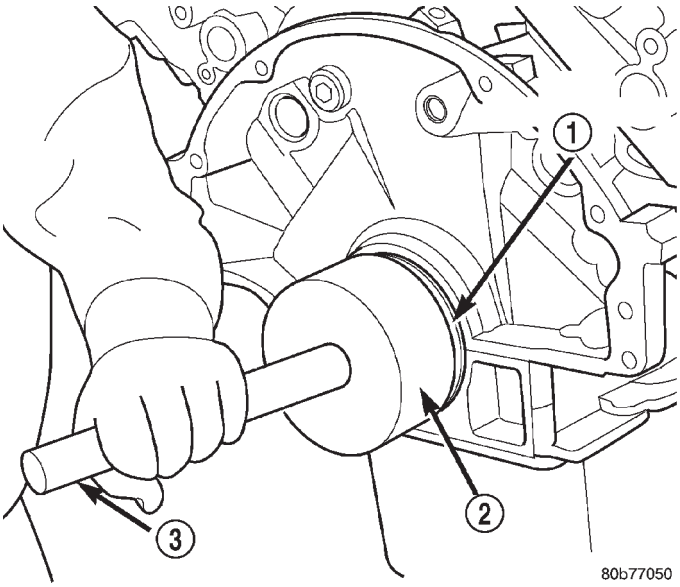

Fig. 67 Crankshaft Rear Oil Seal Installation

1 - REAR CRANKSHAFT SEAL
2 - SPECIAL TOOL 8349–1 INSTALLER
3 - SPECIAL TOOL C-4171 HANDLE

INSTALLATION

(1) Position the flexplate onto the crankshaft and install the bolts hand tight.

(2) Tighten the flexplate retaining bolts to 60 N·m (45 ft. lbs.) in the sequence shown (Fig. 68).

(3) Install the transmission.

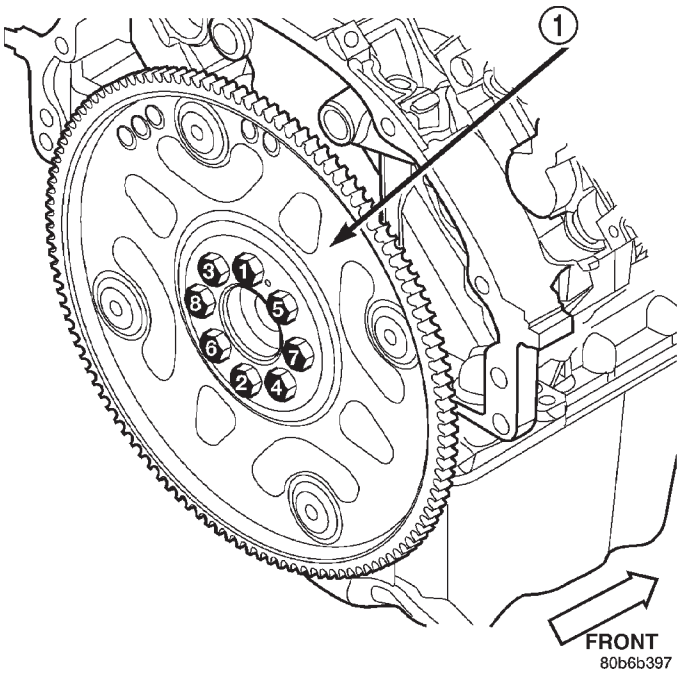

Fig. 68 Flexplate Tightening Sequence

1 - FLEXPLATE

PISTON & CONNECTING ROD

DESCRIPTION

CAUTION: Do not use a metal stamp to mark connecting rods as damage may result, instead use ink or a scratch awl.

The pistons are made of a high strength aluminum alloy. The anodized top ring groove and crown has been replaced with a coated top ring that is blue in color. Piston skirts are coated with a solid lubricant (Molykote) to reduce friction and provide scuff resistance. The connecting rods are made of forged powdered metal, with a “fractured cap” design. A pressed fit piston pin is used to attach the piston and connecting rod.

STANDARD PROCEDURE—PISTON FITTING

(1) To correctly select the proper size piston, a cylinder bore gauge, capable of reading in 0.003 mm (.0001 in.) INCREMENTS is required. If a bore gauge is not available, do not use an inside micrometer.

(2) Measure the inside diameter of the cylinder bore at a point 49.5 mm (1-15/16 inches) below top of bore. Start perpendicular (across or at 90 degrees) to the axis of the crankshaft at point A and then take an additional bore reading 90 degrees to that at point B (Fig. 70).

PISTON & CONNECTING ROD (Continued)

(3) The coated pistons will be serviced with the piston pin and connecting rod pre-assembled. Tin coated pistons should not be used as replacements for coated pistons.

(4) The coating material is applied to the piston after the final piston machining process. Measuring the outside diameter of a coated piston will not provide accurate results (Fig. 69). Therefore measuring the inside diameter of the cylinder bore with a dial Bore Gauge is **MANDATORY**. To correctly select the proper size piston, a cylinder bore gauge capable of reading in 0.003 mm (.0001 in.) increments is required.

(5) Piston installation into the cylinder bore requires slightly more pressure than that required for non-coated pistons. The bonded coating on the piston will give the appearance of a line-to-line fit with the cylinder bore.

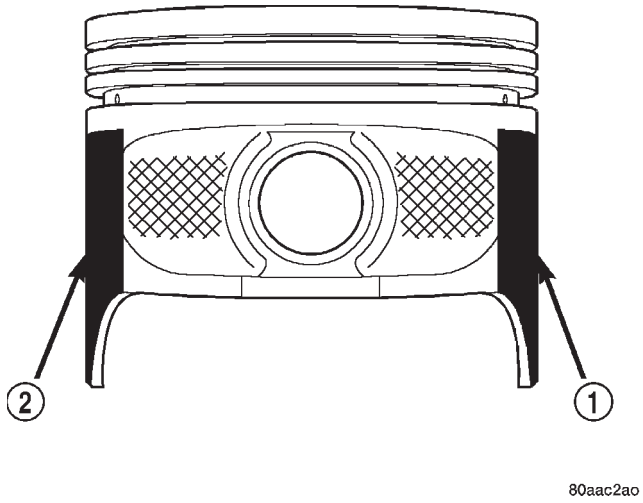

Fig. 69 Moly Coated Piston

1 - MOLY COATED
2 - MOLY COATED

REMOVAL

(1) Disconnect negative cable from battery.

(2) Remove the following components:

• Oil pan and gasket/windage tray (Refer to 9 - ENGINE/LUBRICATION/OIL PAN - REMOVAL).

• Cylinder head covers (Refer to 9 - ENGINE/CYLINDER HEAD/CYLINDER HEAD COVER(S) - REMOVAL) and (Refer to 9 - ENGINE/CYLINDER HEAD/CYLINDER HEAD COVER(S) - REMOVAL).

• Timing chain cover (Refer to 9 - ENGINE/VALVE TIMING/TIMING BELT / CHAIN COVER(S) - REMOVAL).

• Cylinder head(s) (Refer to 9 - ENGINE/CYLINDER HEAD - REMOVAL) and (Refer to 9 - ENGINE/CYLINDER HEAD - REMOVAL).

(3) If necessary, remove top ridge of cylinder bores with a reliable ridge reamer before removing pistons

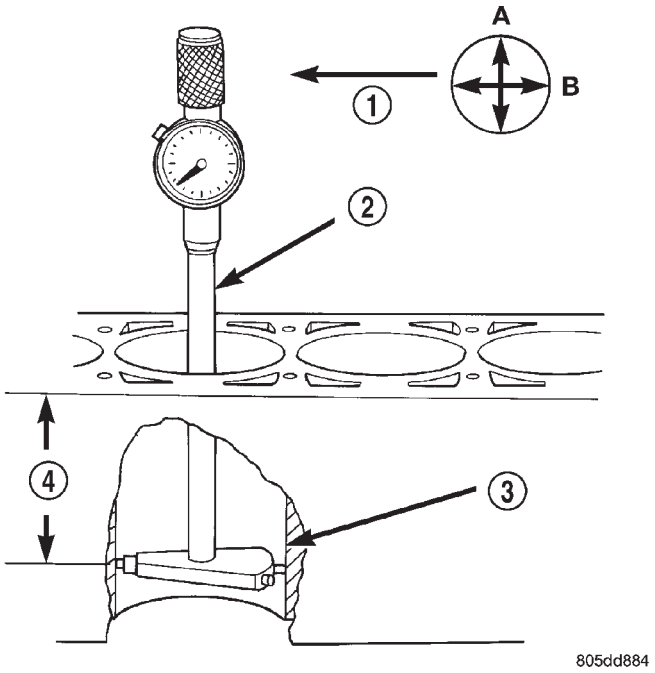

Fig. 70 Bore Gauge—Typical

1 - FRONT
2 - BORE GAUGE
3 - CYLINDER BORE
4 - 49.5 MM
(1–15/16 in)

from cylinder block. **Be sure to keep tops of pistons covered during this operation.** Pistons and connecting rods must be removed from top of cylinder block. When removing piston and connecting rod assemblies from the engine, rotate crankshaft so the each connecting rod is centered in cylinder bore.

CAUTION: DO NOT use a number stamp or a punch to mark connecting rods or caps, as damage to connecting rods could occur

NOTE: Connecting rods and bearing caps are not interchangeable and should be marked before removing to ensure correct reassembly.

(4) Mark connecting rod and bearing cap positions using a permanent ink marker or scribe tool (Fig. 71).

CAUTION: Care must be taken not to damage the fractured rod and cap joint face surfaces, as engine damage may occur.

(5) Remove connecting rod cap. Install Special Tool 8507 Connecting Rod Guides into the connecting rod being removed. Remove piston from cylinder bore. Repeat this procedure for each piston being removed.

PISTON & CONNECTING ROD (Continued)

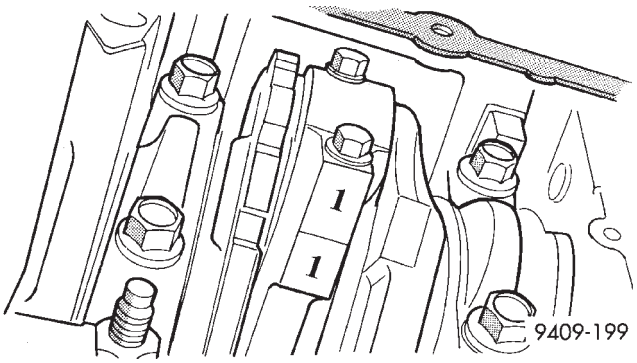

Fig. 71 Identify Connecting Rod to Cylinder Position—Typical

CAUTION: Care must be taken not to nick crankshaft journals, as engine damage may occur

(6) Immediately after piston and connecting rod removal, install bearing cap on the mating connecting rod to prevent damage to the fractured cap and rod surfaces.

(7) Carefully remove piston rings from piston(s), starting from the top ring down.

CLEANING

CAUTION: DO NOT use a wire wheel or other abrasive cleaning devise to clean the pistons or connecting rods. The pistons have a Moly coating, this coating must not be damaged.

(1) Using a suitable cleaning solvent clean the pistons in warm water and towel dry.

(2) Use a wood or plastic scraper to clean the ring land grooves.

CAUTION: DO NOT remove the piston pin from the piston and connecting rod assembly.

INSPECTION

Check the connecting rod journal for excessive wear, taper and scoring. Refer to Connecting Rod Bearings in the Service Procedures portion of this Section.

Check the connecting rod for signs of twist or bending.

Check the piston for taper and elliptical shape before it is fitted into the cylinder bore. Refer to Fitting Pistons in the Service Procedures portion of this Section.

Check the piston for scoring, or scraping marks in the piston skirts. Check the ring lands for cracks and/or deterioration.

INSTALLATION

(1) Before installing piston and connecting rod assemblies into the bore, install the piston rings.

(2) Immerse the piston head and rings in clean engine oil. Position a ring compressor over the piston and rings. Tighten ring compressor. **Ensure position of rings do not change during this operation.**

(3) Position bearing onto connecting rod. Ensure that hole in bearing shell aligns with hole in connecting rod. Lubricate bearing surface with clean engine oil.

(4) Install Special Tool 8507 Connecting Rod Guides into connecting rod bolt threads (Fig. 72).

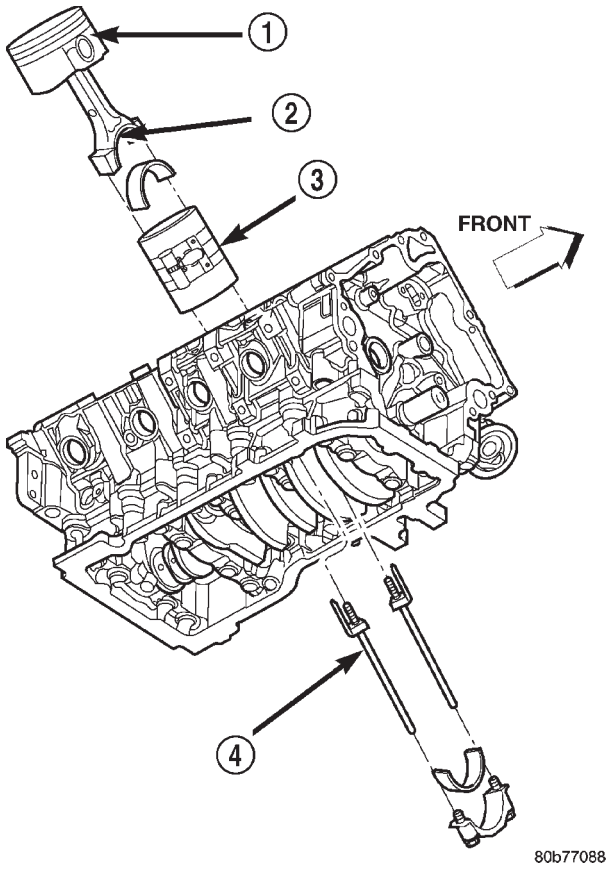

Fig. 72 Piston and Connecting Rod—Installation

1 - “F” TOWARD FRONT OF ENGINE
2 - OIL SLINGER SLOT
3 - RING COMPRESSOR
4 - SPECIAL TOOL 8507

(5) The pistons are marked on the piston pin bore surface with an raised “F” indicating installation position. This mark must be pointing toward the front of engine on both cylinder banks. The connecting rod oil slinger slot faces the front of the engine (Fig. 73).

(6) Wipe cylinder bore clean and lubricate with engine oil.

PISTON & CONNECTING ROD (Continued)

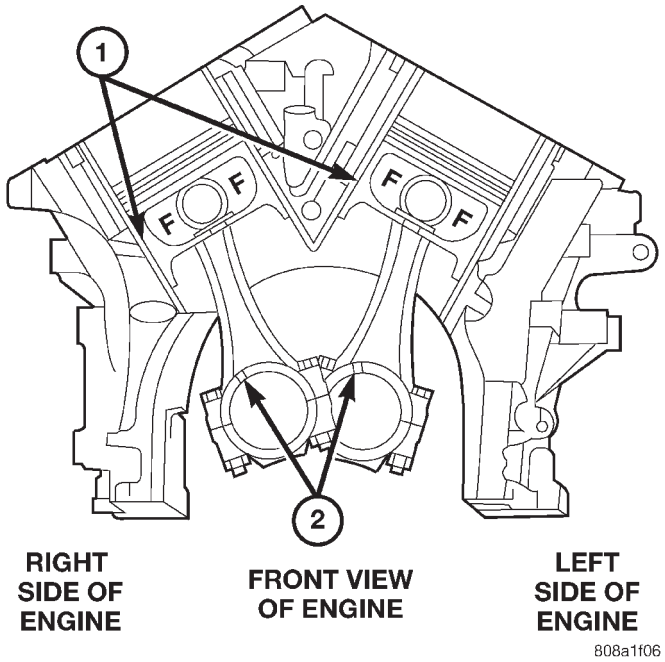

Fig. 73 Piston and Connecting Rod Orientation

1 - MAJOR THRUST SIDE OF PISTON
2 - OIL SLINGER SLOT

(7) Rotate crankshaft until connecting rod journal is on the center of cylinder bore. Insert rod and piston into cylinder bore and carefully position connecting rod guides over crankshaft journal.

(8) Tap piston down in cylinder bore using a hammer handle. While at the same time, guide connecting rod into position on rod journal.

CAUTION: Connecting Rod Bolts are Torque to Yield Bolts and Must Not Be Reused. Always replace the Rod Bolts whenever they are loosened or removed.

(9) Lubricate rod bolts and bearing surfaces with engine oil. Install connecting rod cap and bearing. Tighten bolts to 27 N·m (20 ft. lbs.) plus 90°.

(10) Install the following components:

- Cylinder head(s). (Refer to 9 - ENGINE/CYLINDER HEAD - INSTALLATION).
- Timing chain and cover. (Refer to 9 - ENGINE/VALVE TIMING/TIMING BELT / CHAIN COVER(S) - INSTALLATION).
- Cylinder head covers (Refer to 9 - ENGINE/CYLINDER HEAD/CYLINDER HEAD COVER(S) - INSTALLATION).
- Oil pan and gasket/windage tray. (Refer to 9 - ENGINE/LUBRICATION/OIL PAN - INSTALLATION).

(11) Fill crankcase with proper engine oil to correct level.

(12) Connect negative cable to battery.

PISTON RINGS

STANDARD PROCEDURE—PISTON RING - FITTING

Before reinstalling used rings or installing new rings, the ring clearances must be checked.

(1) Wipe the cylinder bore clean.

(2) Insert the ring in the cylinder bore.

NOTE: The ring gap measurement must be made with the ring positioned at least 12mm (0.50 inch.) from bottom of cylinder bore.

(3) Using a piston, to ensure that the ring is squared in the cylinder bore, slide the ring downward into the cylinder.

(4) Using a feeler gauge check the ring end gap (Fig. 74). Replace any rings not within specification.

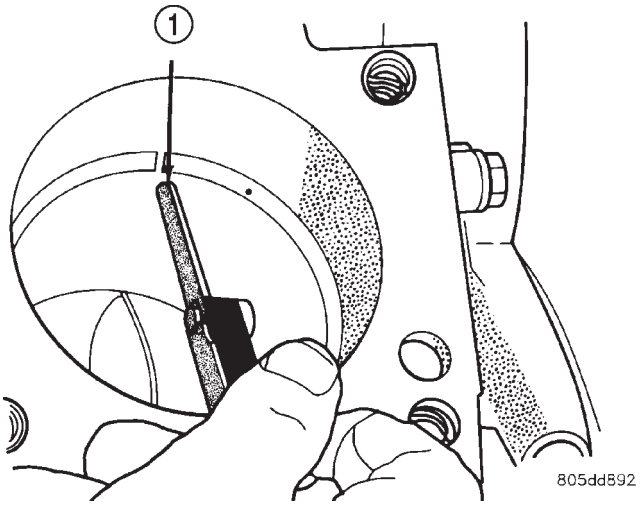

Fig. 74 Ring End Gap Measurement - Typical

1 - FEELER GAUGE

PISTON RING SIDE CLEARANCE

NOTE: Make sure the piston ring grooves are clean and free of nicks and burrs.

(5) Measure the ring side clearance as shown (Fig. 75)make sure the feeler gauge fits snugly between the ring land and the ring. Replace any ring not within specification.

(6) Rotate the ring around the piston, the ring must rotate in the groove with out binding.

PISTON RINGS (Continued)

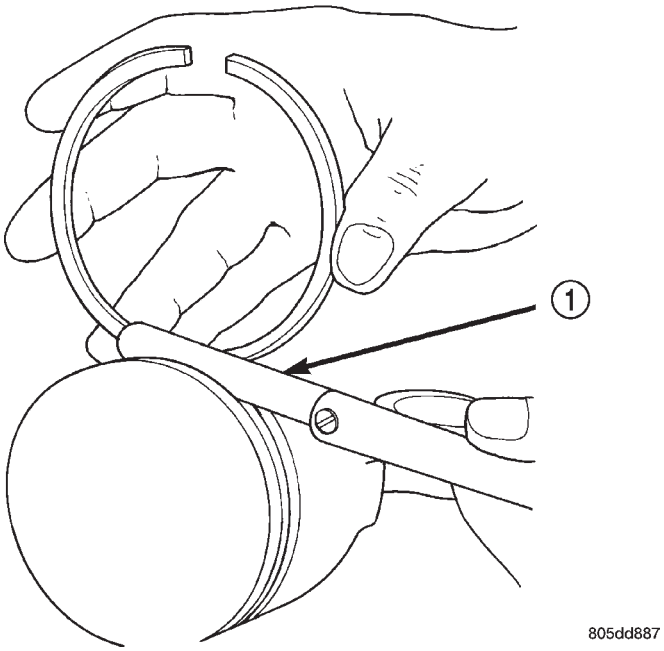

Fig. 75 Measuring Piston Ring Side Clearance

1 - FEELER GAUGE

PISTON RING SPECIFICATION CHART

Ring Position	Groove Clearance	Maximum Clearance
Upper Ring	.051-.094mm (0.0020- .0037 in.)	0.11mm (0.004 in.)
Intermediate Ring	0.04-0.08mm (0.0016-0.0031 in.)	0.10mm (0.004 in.)
Oil Control Ring (Steel Rails)	.019-.229mm (.0007-.0090 in.)	.25mm (0.010 in.)
Ring Position	**Ring Gap**	**Wear Limit**
Upper Ring	0.20-0.36mm (0.008-0.014 in.)	0.40mm (0.0016in.)
Intermediate Ring	0.37-0.63mm (0.014-0.025 in.)	0.71mm (0.028in.)
Oil Control Ring (Steel Rail)	0.025-0.76mm (0.010- 0.030 in.)	1.52mm (0.060in.)

(7) The No. 1 and No. 2 piston rings have a different cross section. Ensure No. 2 ring is installed with manufacturers I.D. mark (Dot) facing up, towards top of the piston.

NOTE: Piston rings are installed in the following order:

- Oil ring expander.
- Upper oil ring side rail.
- Lower oil ring side rail.
- No. 2 Intermediate piston ring.
- No. 1 Upper piston ring.

(8) Install the oil ring expander.

(9) Install upper side rail (Fig. 76) by placing one end between the piston ring groove and the expander ring. Hold end firmly and press down the portion to be installed until side rail is in position. Repeat this step for the lower side rail.

(10) Install No. 2 intermediate piston ring using a piston ring installer (Fig. 77).

(11) Install No. 1 upper piston ring using a piston ring installer (Fig. 77).

(12) Position piston ring end gaps as shown in (Fig. 78). It is important that expander ring gap is at least 45° from the side rail gaps, but not on the piston pin center or on the thrust direction.

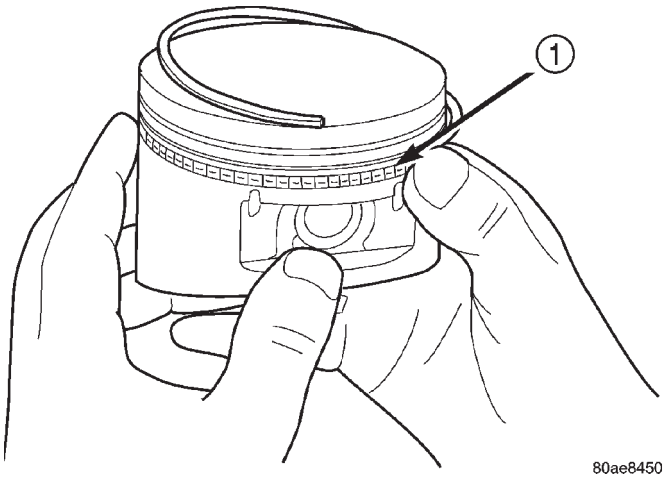

Fig. 76 Side Rail—Installation

1 - SIDE RAIL END

VIBRATION DAMPER

REMOVAL

(1) Disconnect negative cable from battery.

(2) Remove accessory drive belt (Refer to 7 - COOLING/ACCESSORY DRIVE/DRIVE BELTS - REMOVAL).

NOTE: Transmission cooler line snaps into shroud lower right hand corner.

VIBRATION DAMPER (Continued)

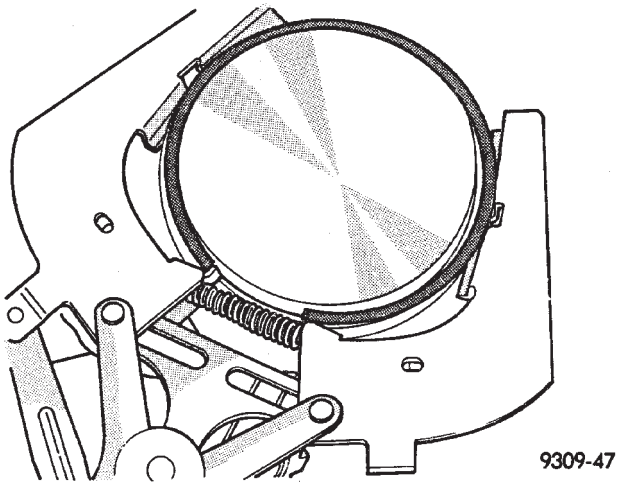

Fig. 77 Upper and Intermediate Rings—Installation

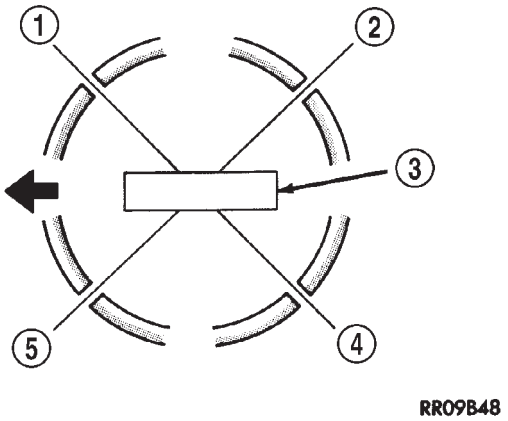

Fig. 78 Piston Ring End Gap Position

1 - SIDE RAIL UPPER
2 - NO. 1 RING GAP
3 - PISTON PIN
4 - SIDE RAIL LOWER
5 - NO. 2 RING GAP AND SPACER EXPANDER GAP

(3) Remove crankshaft damper bolt.

(4) Remove damper using Special Tools 8513 Insert and 1026 Three Jaw Puller (Fig. 79).

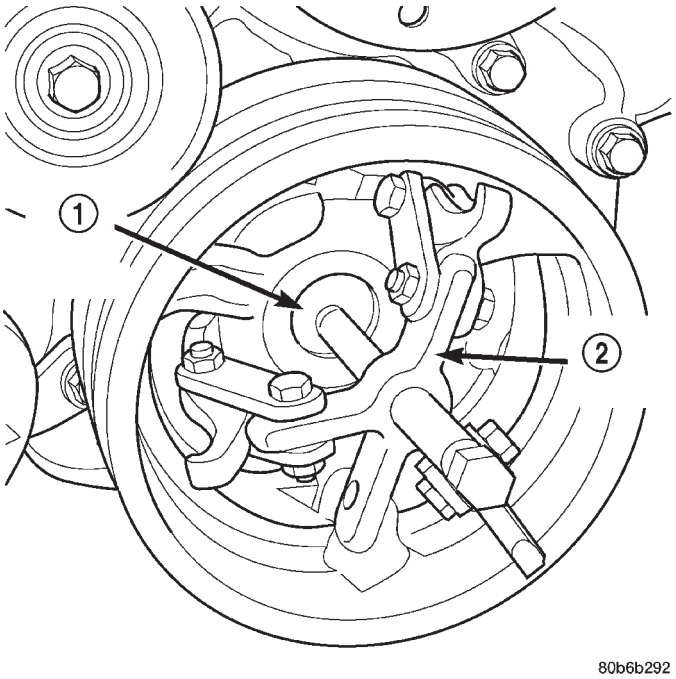

Fig. 79 Crankshaft Damper—Removal

1 - SPECIAL TOOL 8513 INSERT
2 - SPECIAL TOOL 1026

INSTALLATION

CAUTION: To prevent severe damage to the Crankshaft, Damper or Special Tool 8512, thoroughly clean the damper bore and the crankshaft nose before installing Damper.

(1) Align crankshaft damper slot with key in crankshaft. Slide damper onto crankshaft slightly.

CAUTION: Special Tool 8512A, is assembled in a specific sequence. Failure to assemble this tool in this sequence can result in tool failure and severe damage to either the tool or the crankshaft.

VIBRATION DAMPER (Continued)

(2) Assemble Special Tool 8512–A as follows, The nut is threaded onto the shaft first. Then the roller bearing is placed onto the threaded rod (The hardened bearing surface of the bearing **MUST** face the nut). Then the hardened washer slides onto the threaded rod (Fig. 80). Once assembled coat the threaded rod's threads with Mopar® Nickel Anti-Seize or (Loctite No. 771).

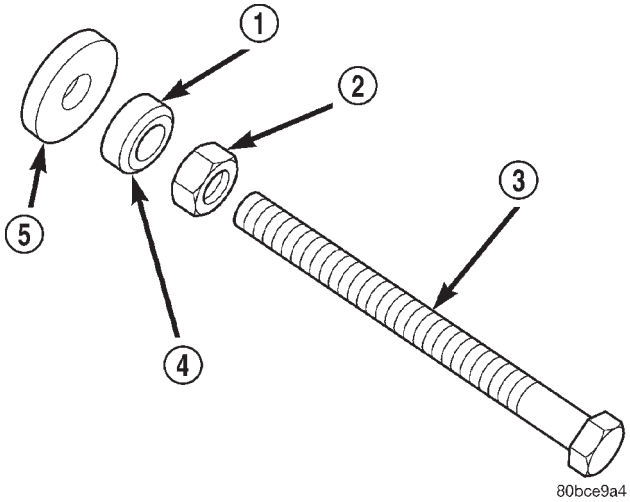

Fig. 80 Proper Assembly Method for Special Tool 8512–A

1 - BEARING
2 - NUT
3 - THREADED ROD
4 - BEARING HARDENED SURFACE (FACING NUT)
5 - HARDENED WASHER

(3) Using Special Tool 8512A, press damper onto crankshaft (Fig. 81).

(4) Install then tighten crankshaft damper bolt to 175 N·m (130 ft. lbs.).

(5) Install accessory drive belt (Refer to 7 - COOLING/ACCESSORY DRIVE/DRIVE BELTS - INSTALLATION).

(6) Connect negative cable to battery.

STRUCTURAL COVER

DESCRIPTION

The structural dust cover is made of die cast aluminum and joins the lower half of the transmission bell housing to the engine bedplate.

OPERATION

The structural cover provides additional powertrain stiffness and reduces noise and vibration.

REMOVAL

(1) Raise vehicle on hoist.

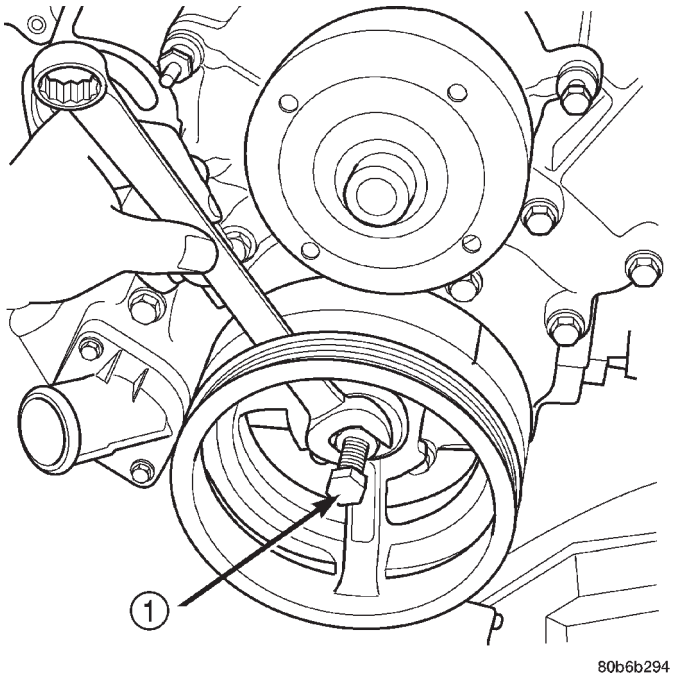

Fig. 81 Crankshaft Damper Installation

1 - SPECIAL TOOL 8512A

(2) Remove the left hand exhaust pipe from exhaust manifold.

(3) Loosen the right hand exhaust manifold-to-exhaust pipe retaining bolts.

(4) Remove the eight bolts retaining structural cover (Fig. 82).

(5) Pivot the exhaust pipe downward and remove the structural cover.

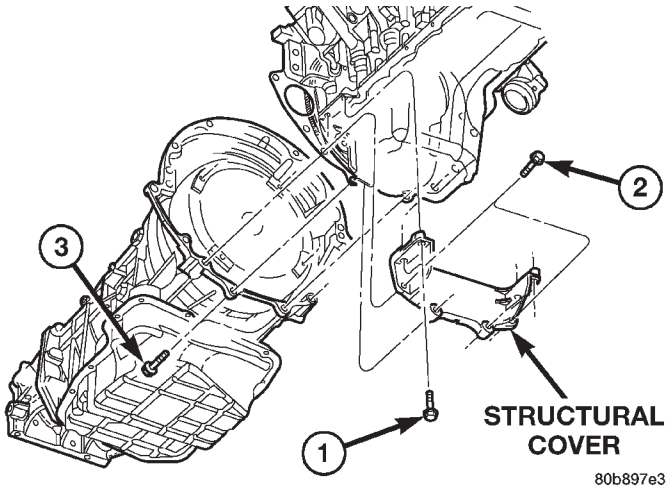

Fig. 82 Structural Cover

INSTALLATION

CAUTION: The structural cover must be installed as described in the following steps. Failure to do so will cause severe damage to the cover.

STRUCTURAL COVER (Continued)

(1) Position the structural cover in the vehicle.

(2) Install all four bolts retaining the cover-to-engine. DO NOT tighten the bolts at this time.

(3) Install the four cover-to-transmission bolts. Do NOT tighten at this time.

CAUTION: The structural cover must be held tightly against both the engine and the transmission bell housing during tightening sequence. Failure to do so may cause damage to the cover.

(4) Starting with the two rear cover-to-engine bolts, tighten bolts (1) (Fig. 83) to 54 N·m (40 ft. lbs.), then tighten bolts (2) (Fig. 83) and (3) to 54 N·m (40 ft. lbs.) in the sequence shown.

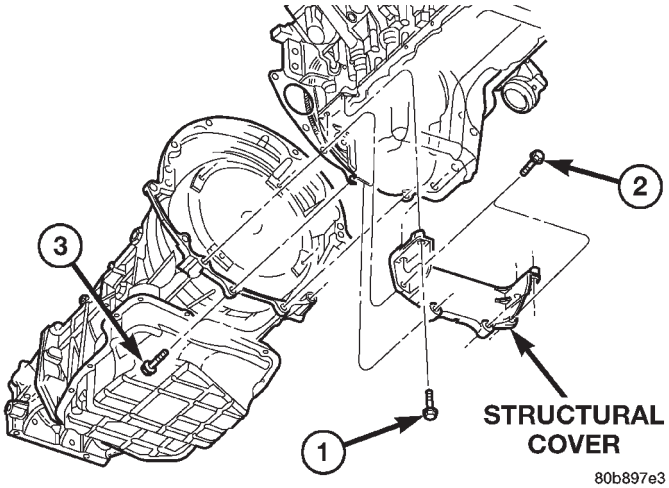

Fig. 83 Structural Cover

(5) Install the exhaust pipe on left hand exhaust manifold.

(6) Tighten exhaust manifold-to-exhaust pipe retaining bolts to 20–26 N·m (15–20 ft. lbs.).

FRONT MOUNT

REMOVAL

(1) Disconnect the negative cable from the battery.

CAUTION: Remove the fan blade, fan clutch and fan shroud before raising engine. Failure to do so may cause damage to the fan blade, fan clutch and fan shroud.

(2) Remove the engine oil filter (Refer to 9 - ENGINE/LUBRICATION/OIL FILTER - REMOVAL).

(3) Support the engine with a suitable jack and a block of wood across the full width of the engine oil pan.

(4) Remove the four cylinder block-to-insulator mount bolts and the nut form the engine insulator mount through bolt (Fig. 84) (Fig. 85)

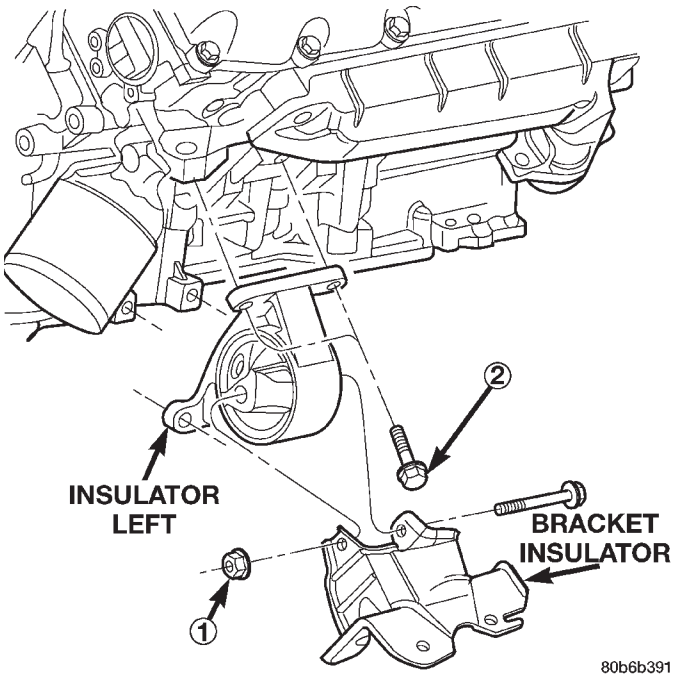

Fig. 84 Engine Insulator Mount—Left

1 - LOCK NUT (1 PER SIDE)
2 - BOLT (4 PER SIDE)

(5) Using the jack, raise the engine high enough to remove the engine insulator mount through bolt and the insulator mount.

INSTALLATION

(1) Position the insulator mount and install the insulator mount through bolt.

(2) Lower the engine until the four cylinder block-to-insulator mount bolts can be installed.

(3) Remove the jack and block of wood.

(4) Torque the cylinder block-to-insulator mount bolts to 61N·m (45 ft. lbs.).

(5) Install and torque the through bolt retaining nut to 61N·m (45 ft. lbs.).

REAR MOUNT

REMOVAL

(1) Raise vehicle on hoist.

(2) Using a suitable jack, support transmission.

(3) Remove the lock nut from the insulator mount through bolt and the four insulator-to-transmission mounting bolts.

(4) Raise the transmission enough to remove the through bolt and insulator mount (Fig. 86) (Fig. 87).

REAR MOUNT (Continued)

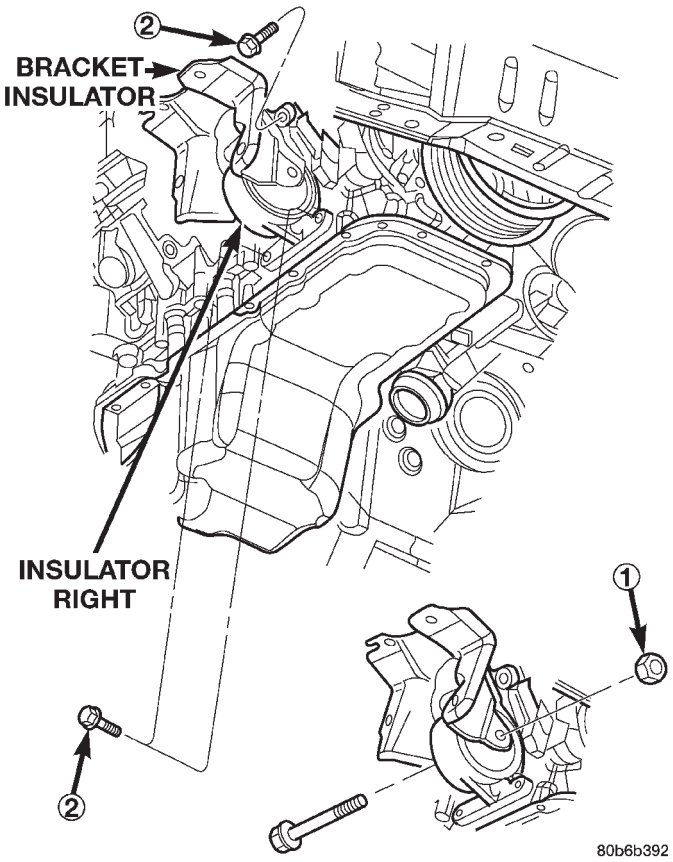

Fig. 85 Engine Insulator Mount—Right

1 - LOCK NUT (1 PER SIDE)
2 - BOLT (4 PER SIDE)

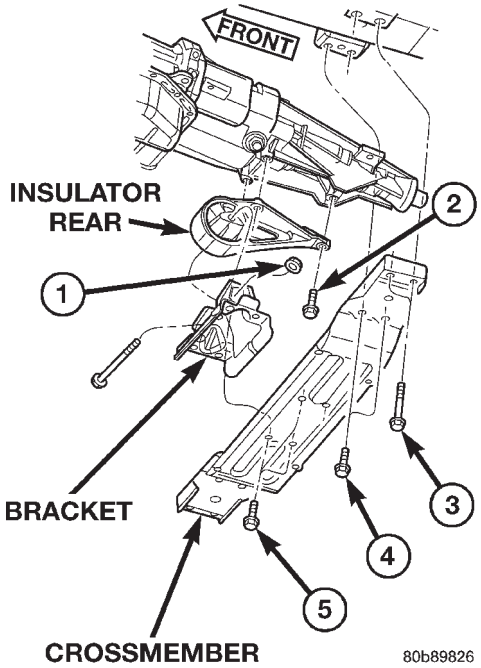

Fig. 86 Engine Rear Mount—4X2

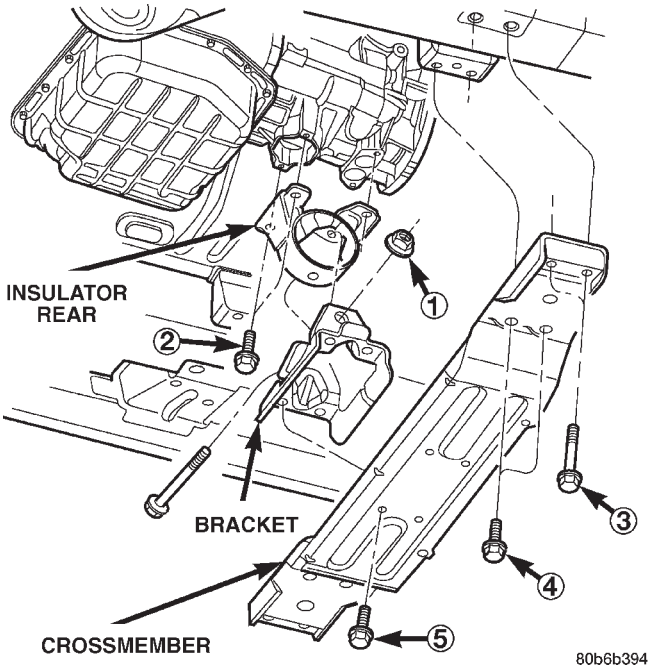

Fig. 87 Engine Rear Mount—4X4

ITEM	DESCRIPTION	TORQUE
1	NUT (Qty 1)	45 N·m (33 ft. lbs)
2	BOLT (Qty 4)	46 N·m (34 ft. lbs.)
3	BOLT (Qty 2 Per Side)	68 N·m (50 ft. lbs.)
4	BOLT (Qty 2 Per Side)	46 N·m (34 ft. lbs.)
5	BOLT (Qty 4)	46 N·m (34 ft. lbs.)

INSTALLATION

(1) Position the insulator mount and install the through bolt.

(2) Lower the transmission enough to install the four insulator-to-transmission mounting bolts. Torque the bolts to 46 N·m (34 ft. lbs.).

(3) Install the through bolt lock nut. Torque nut to 68 N·m (50 ft. lbs.).

(4) Remove jack, lower vehicle.

LUBRICATION

DESCRIPTION

The lubrication system (Fig. 88) is a full flow filtration pressure feed type.

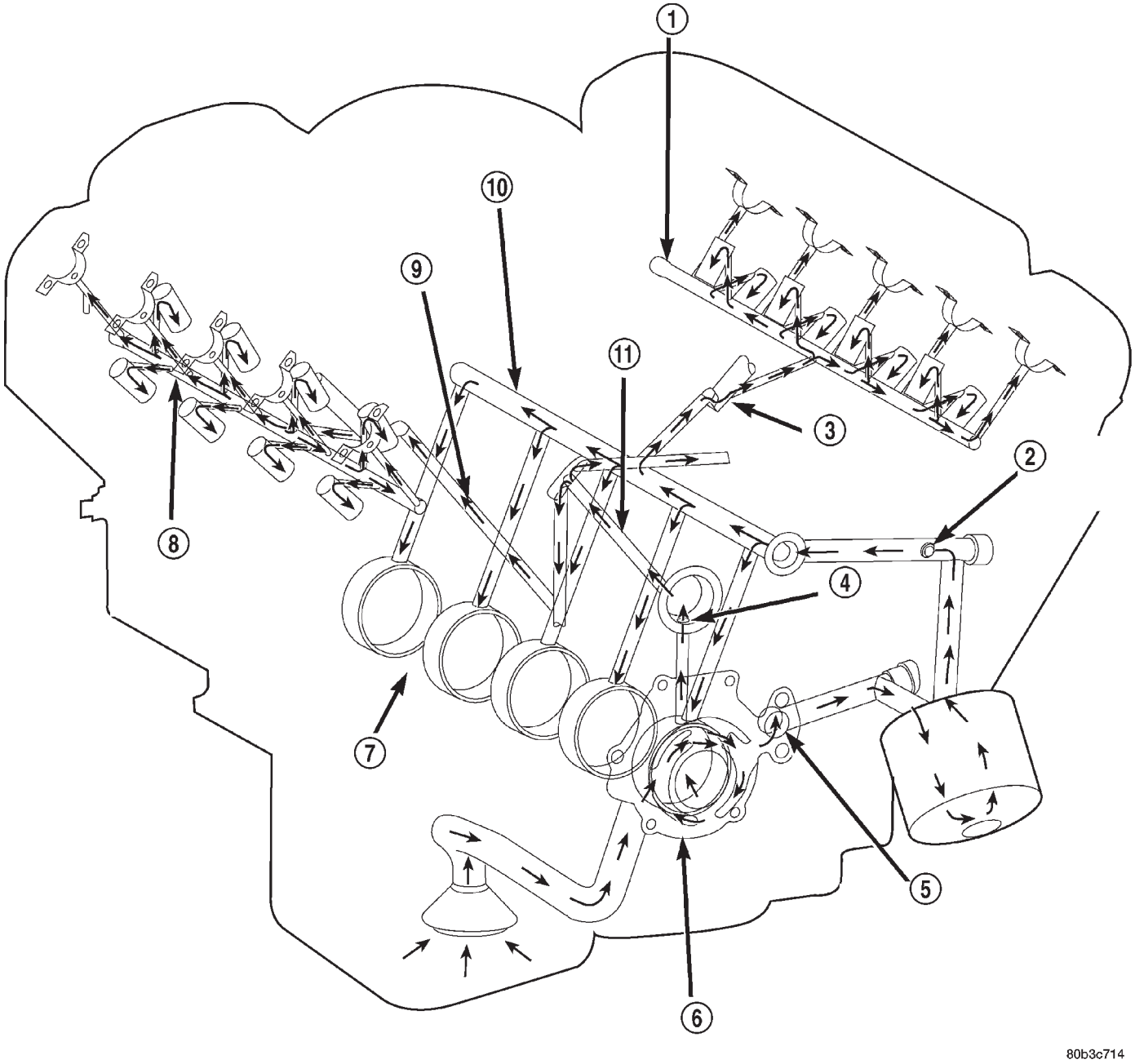

Fig. 88 Engine Oil Lubrication System

1 - LEFT CYLINDER HEAD OIL GALLERY
2 - OIL PRESSURE SENSOR LOCATION
3 - TO LEFT CYLINDER HEAD
4 - OIL FEED TO IDLER SHAFT
5 - OIL PUMP OUTLET TO BLOCK
6 - OIL PUMP
7 - TO CRANKSHAFT MAIN JOURNALS
8 - RIGHT CYLINDER HEAD OIL GALLERY
9 - TO RIGHT CYLINDER HEAD
10 - CYLINDER BLOCK MAIN GALLERY
11 - OIL FEED TO BOTH SECONDARY TENSIONERS

LUBRICATION (Continued)

OPERATION

Oil from the oil pan is pumped by a gerotor type oil pump directly mounted to the crankshaft nose. Oil pressure is controlled by a relief valve mounted inside the oil pump housing. For lubrication flow refer to (Fig. 88).

The camshaft exhaust valve lobes and rocker arms are lubricated through a small hole in the rocker arm; oil flows through the lash adjuster then through the rocker arm and onto the camshaft lobe. Due to the orentation of the rocker arm, the camshaft intake lobes are not lubed in the same manner as the exhaust lobes. The intake lobes are lubed through internal passages in the camshaft. Oil flows through a bore in the number 3 camshaft bearing bore, and as the camshaft turns, a hole in the camshaft aligns with the hole in the camshaft bore allowing engine oil to enter the camshaft tube. The oil then exits through 1.6mm (0.063 in.) holes drilled into the intake lobes, lubricating the lobes and the rocker arms.

ENGINE LUBRICATION FLOW CHART—BLOCK: TABLE 1

FROM	TO
Oil Pickup Tube	Oil Pump
Oil Pump	Oil Filter
Oil Filter	Block Main Oil Gallery
Block Main Oil Gallery	1. Crankshaft Main Journal 2. Left Cylinder Head* 3. Right Cylinder Head*
Crankshaft Main Journals	Crankshaft Rod Journals
Crankshaft Number One Main Journal	1. Front Timing Chain Idler Shaft 2. Both Secondary Chain Tensioners
Left Cylinder Head	See Table 2
Right Cylinder Head	See Table 2
* The cylinder head gaskets have an oil restricter to control oil flow to the cylinder heads.	

ENGINE LUBRICATION FLOW CHART—CYLINDER HEADS: TABLE 2

FROM	TO
Cylinder Head Oil Port (in bolt hole)	Diagonal Cross Drilling to Main Oil Gallery
Main Oil Gallery (drilled through head from rear to front)	1. Base of Camshaft Towers 2. Lash Adjuster Towers
Base of Camshaft Towers	Vertical Drilling Through Tower to Camshaft Bearings**
Lash Adjuster Towers	Diagonal Drillings to Hydraulic Lash Adjuster Pockets
** The number three camshaft bearing journal feeds oil into the hollow camshaft tubes. Oil is routed to the intake lobes, which have oil passages drilled into them to lubricate the rocker arms.	

DIAGNOSIS AND TESTING—ENGINE OIL PRESSURE

(1) Remove oil pressure sending unit (Fig. 89)and install gauge assembly C-3292.

(2) Run engine until thermostat opens.

(3) Oil Pressure:

- Curb Idle—25 Kpa (4 psi) minimum
- 3000 rpm—170 - 550 KPa (25 - 80 psi)

(4) If oil pressure is 0 at idle, shut off engine. Check for a clogged oil pick-up screen or a pressure relief valve stuck open.

LUBRICATION (Continued)

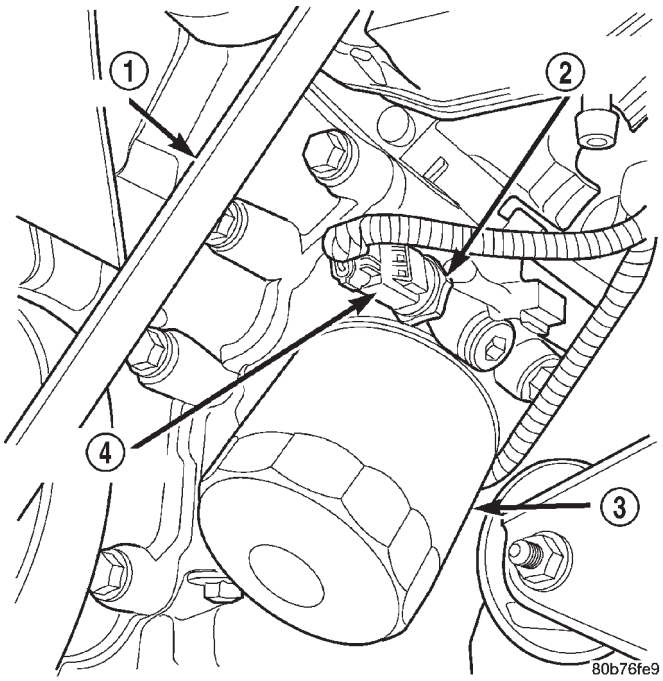

Fig. 89 Oil Pressure Sending Unit

1 - BELT
2 - OIL PRESSURE SENSOR
3 - OIL FILTER
4 - ELEC. CONNECTOR

DIAGNOSIS AND TESTING—REAR SEAL AREA LEAKS

Since it is sometimes difficult to determine the source of an oil leak in the rear seal area of the engine, a more involved inspection is necessary. The following steps should be followed to help pinpoint the source of the leak.

If the leakage occurs at the crankshaft rear oil seal area:

(1) Disconnect the battery.

(2) Raise the vehicle.

(3) Remove torque converter or clutch housing cover and inspect rear of block for evidence of oil. Use a black light to check for the oil leak:

(a) Circular spray pattern generally indicates seal leakage or crankshaft damage.

(b) Where leakage tends to run straight down, possible causes are a porous block, distributor seal, camshaft bore cup plugs, oil galley pipe plugs, oil filter runoff, and main bearing cap to cylinder block mating surfaces. See Engine, for proper repair procedures of these items.

(4) If no leaks are detected, pressurized the crankcase as outlined in the section, Inspection (Engine oil Leaks in general)

CAUTION: Do not exceed 20.6 kPa (3 psi).

(5) If the leak is not detected, very slowly turn the crankshaft and watch for leakage. If a leak is detected between the crankshaft and seal while slowly turning the crankshaft, it is possible the crankshaft seal surface is damaged. The seal area on the crankshaft could have minor nicks or scratches that can be polished out with emery cloth.

CAUTION: Use extreme caution when crankshaft polishing is necessary to remove minor nicks or scratches. The crankshaft seal flange is specially machined to complement the function of the rear oil seal.

(6) For bubbles that remain steady with shaft rotation, no further inspection can be done until disassembled. (Refer to 9 - ENGINE - DIAGNOSIS AND TESTING), under the Oil Leak row, for components inspections on possible causes and corrections.

(7) After the oil leak root cause and appropriate corrective action have been identified, (Refer to 9 - ENGINE/ENGINE BLOCK/CRANKSHAFT OIL SEAL - REAR - REMOVAL).

DIAGNOSIS AND TESTING—ENGINE OIL LEAK INSPECTION

Begin with a thorough visual inspection of the engine, particularly at the area of the suspected leak. If an oil leak source is not readily identifiable, the following steps should be followed:

(1) Do not clean or degrease the engine at this time because some solvents may cause rubber to swell, temporarily stopping the leak.

(2) Add an oil soluble dye (use as recommended by manufacturer). Start the engine and let idle for approximately 15 minutes. Check the oil dipstick to make sure the dye is thoroughly mixed as indicated with a bright yellow color under a black light.

(3) Using a black light, inspect the entire engine for fluorescent dye, particularly at the suspected area of oil leak. If the oil leak is found and identified, repair per service manual instructions.

(4) If dye is not observed, drive the vehicle at various speeds for approximately 24km (15 miles), and repeat inspection.

(4) **If the oil leak source is not positively identified at this time**, proceed with the air leak detection test method.

Air Leak Detection Test Method

(1) Disconnect the breather cap to air cleaner hose at the breather cap end. Cap or plug breather cap nipple.

(2) Remove the PCV valve from the cylinder head cover. Cap or plug the PCV valve grommet.

LUBRICATION (Continued)

(3) Attach an air hose with pressure gauge and regulator to the dipstick tube.

CAUTION: Do not subject the engine assembly to more than 20.6 kpa (3 PSI) of test pressure.

(4) Gradually apply air pressure from 1 psi to 2.5 psi maximum while applying soapy water at the suspected source. Adjust the regulator to the suitable test pressure that provide the best bubbles which will pinpoint the leak source. If the oil leak is detected and identified, repair per service manual procedures.

(5) If the leakage occurs at the rear oil seal area, refer to the section, Inspection for Rear Seal Area Leak.

(6) If no leaks are detected, turn off the air supply and remove the air hose and all plugs and caps. Install the PCV valve and breather cap hose.

(7) Clean the oil off the suspect oil leak area using a suitable solvent. Drive the vehicle at various speeds approximately 24 km (15 miles). Inspect the engine for signs of an oil leak by using a black light.

INSPECTION FOR REAR SEAL AREA LEAKS

Since it is sometimes difficult to determine the source of an oil leak in the rear seal area of the engine, a more involved inspection is necessary. The following steps should be followed to help pinpoint the source of the leak.

If the leakage occurs at the crankshaft rear oil seal area:

(1) Disconnect the battery.

(2) Raise the vehicle.

(3) Remove torque converter or clutch housing cover and inspect rear of block for evidence of oil. Use a black light to check for the oil leak:

(a) Circular spray pattern generally indicates seal leakage or crankshaft damage.

(b) Where leakage tends to run straight down, possible causes are a porous block, distributor seal, camshaft bore cup plugs oil galley pipe plugs, oil filter runoff, and main bearing cap to cylinder block mating surfaces.

(4) If no leaks are detected, pressurize the crankcase as outlined in the, Inspection (Engine oil Leaks in general)

CAUTION: Do not exceed 20.6 kPa (3 psi).

(5) If the leak is not detected, very slowly turn the crankshaft and watch for leakage. If a leak is detected between the crankshaft and seal while slowly turning the crankshaft, it is possible the crankshaft seal surface is damaged. The seal area on the crankshaft could have minor nicks or scratches that can be polished out with emery cloth.

CAUTION: Use extreme caution when crankshaft polishing is necessary to remove minor nicks and scratches. The crankshaft seal flange is especially machined to complement the function of the rear oil seal.

(6) For bubbles that remain steady with shaft rotation, no further inspection can be done until disassembled.

OIL

STANDARD PROCEDURE—ENGINE OIL

WARNING: NEW OR USED ENGINE OIL CAN BE IRRITATING TO THE SKIN. AVOID PROLONGED OR REPEATED SKIN CONTACT WITH ENGINE OIL. CONTAMINANTS IN USED ENGINE OIL, CAUSED BY INTERNAL COMBUSTION, CAN BE HAZARDOUS TO YOUR HEALTH. THOROUGHLY WASH EXPOSED SKIN WITH SOAP AND WATER. DO NOT WASH SKIN WITH GASOLINE, DIESEL FUEL, THINNER, OR SOLVENTS, HEALTH PROBLEMS CAN RESULT. DO NOT POLLUTE, DISPOSE OF USED ENGINE OIL PROPERLY.

ENGINE OIL SPECIFICATION

CAUTION: Do not use non-detergent or straight mineral oil when adding or changing crankcase lubricant. Engine failure can result.

API SERVICE GRADE CERTIFIED

Use an engine oil that is API Service Grade Certified. MOPAR® provides engine oils that conform to this service grade.

SAE VISCOSITY

An SAE viscosity grade is used to specify the viscosity of engine oil. Use only engine oils with multiple viscosities such as 5W-30 or 10W-30 in the 4.7L engines. These are specified with a dual SAE viscosity grade which indicates the cold-to-hot temperature viscosity range. Select an engine oil that is best suited to your particular temperature range and variation (Fig. 90).

ENERGY CONSERVING OIL

An Energy Conserving type oil is recommended for gasoline engines. The designation of ENERGY CONSERVING is located on the label of an engine oil container.

OIL (Continued)

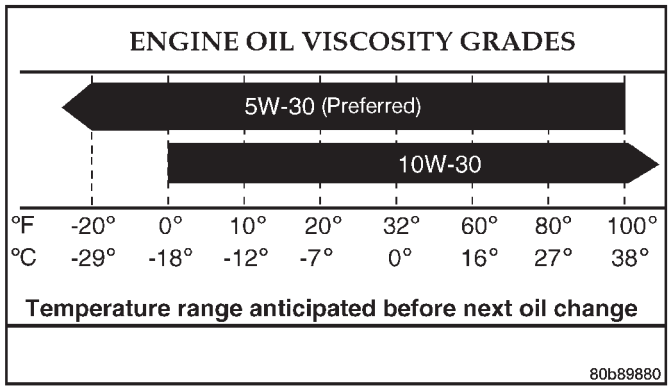

Fig. 90 Temperature/Engine Oil Viscosity—4.7L Engine

CONTAINER IDENTIFICATION

Standard engine oil identification notations have been adopted to aid in the proper selection of engine oil. The identifying notations are located on the label of engine oil plastic bottles and the top of engine oil cans (Fig. 91).

9400-9

Fig. 91 Engine Oil Container Standard Notations

OIL LEVEL INDICATOR (DIPSTICK)

The engine oil level indicator is located on the right side of the the 4.7L engine. (Fig. 92).

CRANKCASE OIL LEVEL INSPECTION

CAUTION: Do not overfill crankcase with engine oil, pressure loss or oil foaming can result.

Inspect engine oil level approximately every 800 kilometers (500 miles). Unless the engine has exhibited loss of oil pressure, run the engine for about five minutes before checking oil level. Checking engine oil level on a cold engine is not accurate.

To ensure proper lubrication of an engine, the engine oil must be maintained at an acceptable level. The acceptable levels are indicated between the ADD and SAFE marks on the engine oil dipstick.

(1) Position vehicle on level surface.

(2) With engine OFF, allow approximately ten minutes for oil to settle to bottom of crankcase, remove engine oil dipstick.

(3) Wipe dipstick clean.

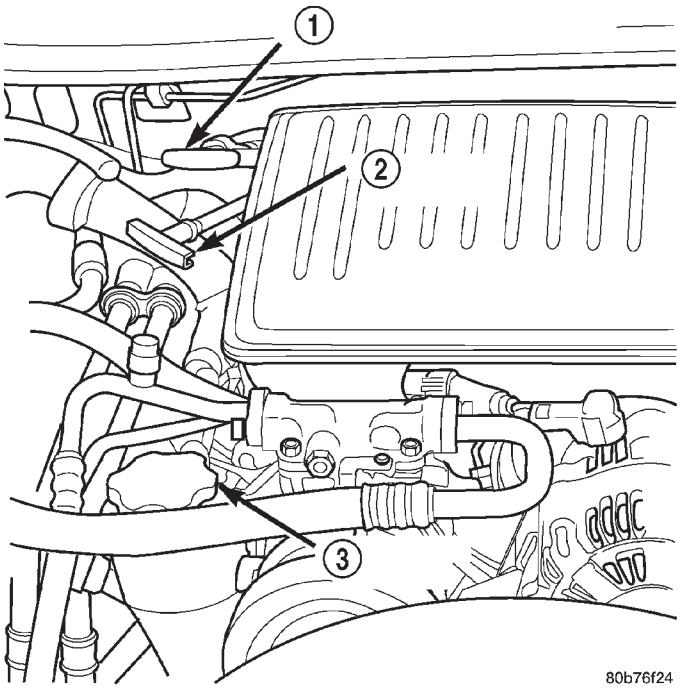

Fig. 92 Engine Oil Dipstick 4.7L Engine

1 - TRANSMISSION DIPSTICK
2 - ENGINE OIL DIPSTICK
3 - ENGINE OIL FILL CAP

(4) Install dipstick and verify it is seated in the tube.

(5) Remove dipstick, with handle held above the tip, take oil level reading.

(6) Add oil if level is below the SAFE ZONE on dipstick.

ENGINE OIL CHANGE

Change engine oil at mileage and time intervals described in Maintenance Schedules.

Run engine until achieving normal operating temperature.

(1) Position the vehicle on a level surface and turn engine off.

(2) Remove oil fill cap.

(3) Hoist and support vehicle on safety stands.

(4) Place a suitable drain pan under crankcase drain.

(5) Remove drain plug from crankcase and allow oil to drain into pan. Inspect drain plug threads for stretching or other damage. Replace drain plug if damaged.

(6) Install drain plug in crankcase.

(7) Remove oil filter (Refer to 9 - ENGINE/LUBRICATION/OIL FILTER - REMOVAL).

(8) Lower vehicle and fill crankcase with specified type and amount of engine oil described in this section.

(9) Install oil fill cap.

OIL (Continued)

(10) Start engine and inspect for leaks.
(11) Stop engine and inspect oil level.

USED ENGINE OIL DISPOSAL

Care should be exercised when disposing used engine oil after it has been drained from a vehicle engine. Refer to the WARNING at beginning of this section.

OIL FILTER

REMOVAL

All engines are equipped with a high quality full-flow, disposable type oil filter. DaimlerChrysler Corporation recommends a Mopar® or equivalent oil filter be used.

(1) Position a drain pan under the oil filter.
(2) Using a suitable oil filter wrench loosen filter.
(3) Rotate the oil filter counterclockwise (Fig. 93)to remove it from the cylinder block oil filter boss.

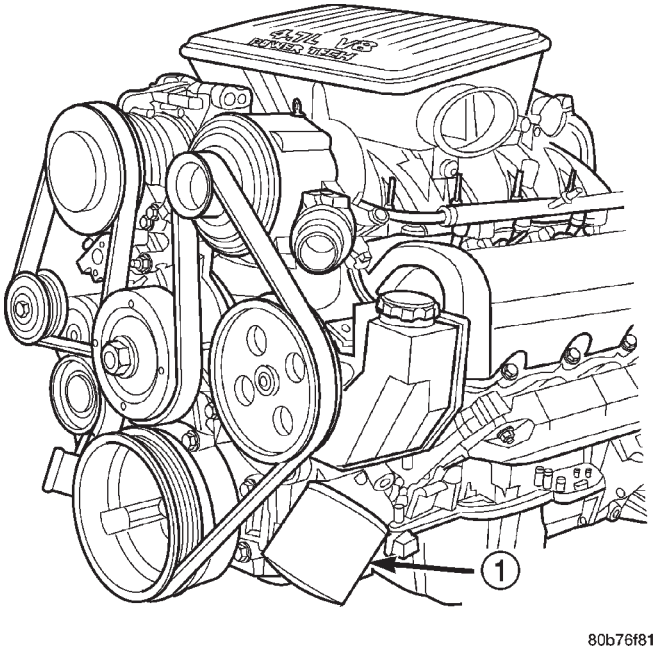

Fig. 93 Oil Filter - 4.7L Engine

1 - ENGINE OIL FILTER

(4) When filter separates from cylinder block oil filter boss, tip gasket end upward to minimize oil spill. Remove filter from vehicle.

NOTE: Make sure filter gasket was removed with filter.

(5) With a wiping cloth, clean the gasket sealing surface of oil and grime.

INSTALLATION

(1) Lightly lubricate oil filter gasket with engine oil.
(2) Thread filter onto adapter nipple. When gasket makes contact with sealing surface, (Fig. 94)hand tighten filter one full turn, do not over tighten.
(3) Add oil, verify crankcase oil level and start engine. Inspect for oil leaks.

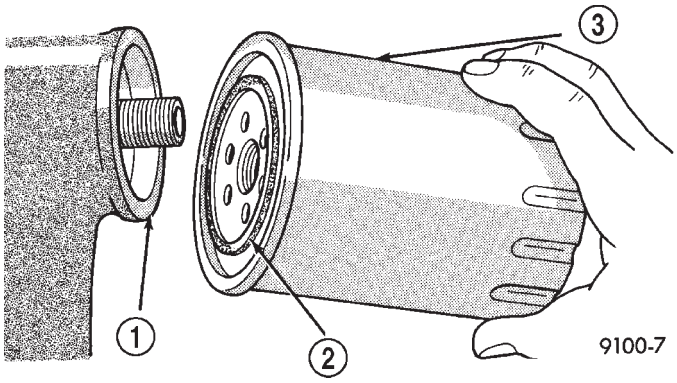

Fig. 94 Oil Filter Sealing Surface—Typical

1 - SEALING SURFACE
2 - RUBBER GASKET
3 - OIL FILTER

OIL PAN

DESCRIPTION

The engine oil pan is made of laminated steel and has a single plane sealing surface. The sandwich style oil pan gasket has an integrated windage tray and steel carrier. The sealing area of the gasket is molded with rubber and is designed to be reused as long as the gasket is not cut, torn or ripped.

REMOVAL

(1) Disconnect negative cable from battery.
(2) Raise vehicle on hoist.
(3) Remove structural cover (Refer to 9 - ENGINE/ENGINE BLOCK/STRUCTURAL COVER - REMOVAL).
(4) Remove exhaust system Y-pipe.
(5) Remove starter (Refer to 8 - ELECTRICAL/STARTING/STARTER MOTOR - REMOVAL).
(6) Drain engine oil.
(7) Un-clip transmission lines from support on oil pan stud. Move lines for oil pan clearance.

CAUTION: DO NOT pry on the oil pan gasket when removing the oil pan, The oil pan gasket is mounted to the cylinder block in three locations and will remain attached to block when lowering oil pan. Gasket can not be removed with oil pan.

OIL PAN (Continued)

(8) Remove oil pan bolts and oil pan.
(9) Remove oil pump pickup tube.
(10) Remove oil pan gasket.

CLEANING

(1) Clean oil pan in solvent and wipe dry with a clean cloth.
(2) Clean the oil pan gasket surface. **DO NOT** use a grinder wheel or other abrasive tool to clean sealing surface.
(3) Clean oil screen and tube thoroughly in clean solvent.

INSPECTION

(1) Inspect oil drain plug and plug hole for stripped or damaged threads. Repair as necessary.
(2) Inspect the oil pan mounting flange for bends or distortion. Straighten flange, if necessary.

INSTALLATION

(1) Clean oil pan and all sealing surfaces. Inspect oil pan gasket and replace as necessary.
(2) Install oil pan gasket.

NOTE: When installing oil pan gasket/windage tray, start four pan bolts at each corner before tightening oil pickup tube. This will keep pan gasket in alignment.

(3) Install oil pump pick-up tube using a new O-ring. First tighten bolt at O-ring end of tube to 28 N·m (20 ft. lbs.). Tighten remain tube support fasteners to 28 N·m (20 ft. lbs.).
(4) Install oil pan and tighten fasteners to 15 N·m (11 ft. lbs.) (Fig. 95).

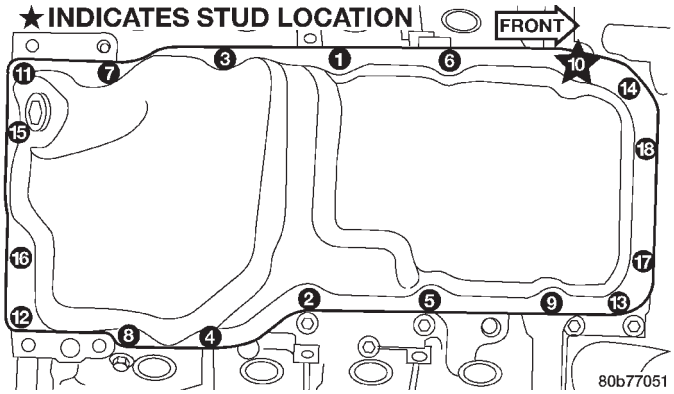

Fig. 95 Oil Pan Tightening Sequence

(5) Reconnect transmission oil cooler lines to oil pan stud bolt.
(6) Install starter (Refer to 8 - ELECTRICAL/STARTING/STARTER MOTOR - INSTALLATION).
(7) Install exhaust system Y-pipe.
(8) Install structural cover (Refer to 9 - ENGINE/ENGINE BLOCK/STRUCTURAL COVER - INSTALLATION).
(9) Lower vehicle.
(10) Fill engine with proper amount of oil (Refer to LUBRICATION & MAINTENANCE/FLUID TYPES - SPECIFICATIONS).
(11) Connect negative cable to battery.

OIL PRESSURE SENSOR/ SWITCH

DESCRIPTION

The 3–wire, solid-state engine oil pressure sensor (sending unit) is located in an engine oil pressure gallery.

OPERATION

The oil pressure sensor uses three circuits. They are:

- A 5–volt power supply from the Powertrain Control Module (PCM)
- A sensor ground through the PCM's sensor return
- A signal to the PCM relating to engine oil pressure

The oil pressure sensor has a 3–wire electrical function very much like the Manifold Absolute Pressure (MAP) sensor. Meaning different pressures relate to different output voltages.

A 5–volt supply is sent to the sensor from the PCM to power up the sensor. The sensor returns a voltage signal back to the PCM relating to engine oil pressure. This signal is then transferred (bussed) to the instrument panel on either a CCD or PCI bus circuit (depending on vehicle line) to operate the oil pressure gauge and the check gauges lamp. Ground for the sensor is provided by the PCM through a low-noise sensor return.

REMOVAL

(1) Disconnect the negative cable from the battery.
(2) Raise vehicle on hoist.
(3) Remove front splash shield.
(4) Disconnect oil pressure sender wire (Fig. 96).

OIL PRESSURE SENSOR/SWITCH (Continued)

(5) Remove the pressure sender (Fig. 96).

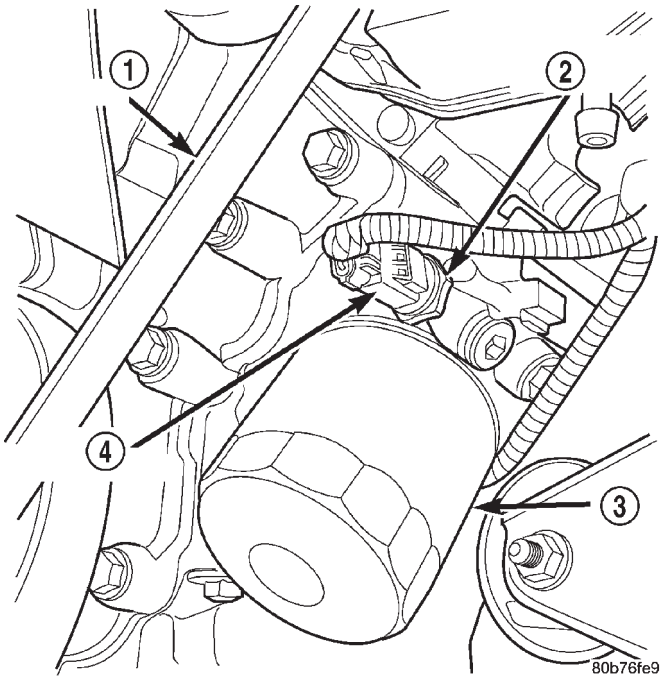

Fig. 96 Oil Pressure Sending Unit

1 - BELT
2 - OIL PRESSURE SENSOR
3 - OIL FILTER
4 - ELEC. CONNECTOR

INSTALLATION

(1) Install oil pressure sender.
(2) Connect oil pressure sender wire.
(3) Install front splash shield.
(4) Lower vehicle.
(5) Connect the negative battery cable.

OIL PUMP

REMOVAL

(1) Remove the oil pan and pick-up tube (Refer to 9 - ENGINE/LUBRICATION/OIL PAN - REMOVAL).

(2) Remove the timing chain cover (Refer to 9 - ENGINE/VALVE TIMING/TIMING BELT / CHAIN COVER(S) - REMOVAL).

(3) Remove the timing chains and tensioners (Refer to 9 - ENGINE/VALVE TIMING/TIMING BELT/CHAIN AND SPROCKETS - REMOVAL).

(4) Remove the four bolts, primary timing chain tensioner and the oil pump.

DISASSEMBLE

(1) Remove oil pump cover screws and lift off cover plate.

(2) Remove pump inner and outer rotors.

NOTE: Once the oil pressure relief valve, cup plug, and pin are removed, the pump assembly must be replaced.

(3) If it is necessary to remove the pressure relief valve, drive the roll pin from pump housing and remove cup plug, spring and valve.

CLEANING

(1) Wash all parts in a suitable solvent.

INSPECTION

CAUTION: Oil pump pressure relief valve and spring should not be removed from the oil pump. If the these components are disassembled andør removed from the pump the entire oil pump assembly must be replaced.

(1) Clean all parts thoroughly. Mating surface of the oil pump housing should be smooth. If the pump cover is scratched or grooved the oil pump assembly should be replaced.

(2) Lay a straight edge across the pump cover surface (Fig. 97). If a 0.025 mm (0.001 in.) feeler gauge can be inserted between the cover and the straight edge the oil pump assembly should be replaced.

(3) Measure the thickness of the outer rotor (Fig. 98). If the outer rotor thickness measures at 11.9888 mm (0.472 in.) or less the oil pump assembly must be replaced.

(4) Measure the diameter of the outer rotor. If the outer rotor diameter measures at 85.928 mm (3.382 in.) or less the oil pump assembly must be replaced.

(5) Measure the thickness of the inner rotor (Fig. 99). If the inner rotor thickness measures at 11.9888 mm (0.472 in.) or less then the oil pump assembly must be replaced.

(6) Slide outer rotor into the body of the oil pump. Press the outer rotor to one side of the oil pump body and measure clearance between the outer rotor and the body (Fig. 100). If the measurement is 0.235mm (0.009 in.) or more the oil pump assembly must be replaced.

(7) Install the inner rotor in the into the oil pump body. Measure the clearance between the inner and outer rotors (Fig. 101). If the clearance between the rotors is .150 mm (0.006 in.) or more the oil pump assembly must be replaced.

(8) Place a straight edge across the body of the oil pump (between the bolt holes), if a feeler gauge of .095 mm (0.0038 in.) or greater can be inserted between the straightedge and the rotors, the pump must be replaced (Fig. 102).

OIL PUMP (Continued)

NOTE: 4.7 Oil pump is released as an assembly. There are no DaimlerChrysler part numbers for Sub-Assembly components. In the event the oil pump is not functioning or out of specification it must be replaced as an assembly.

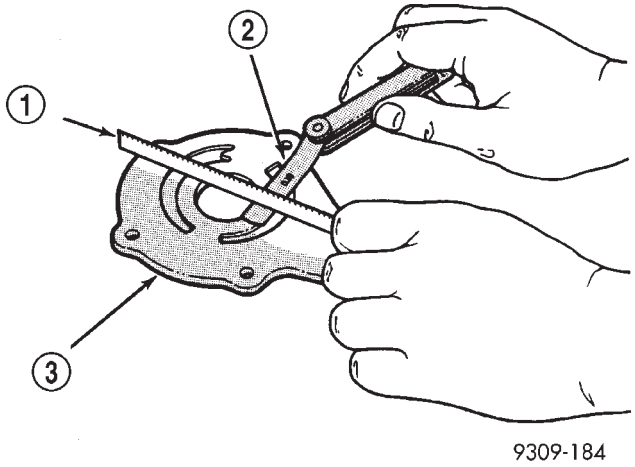

Fig. 97 Checking Oil Pump Cover Flatness

1 - STRAIGHT EDGE
2 - FEELER GAUGE
3 - OIL PUMP COVER

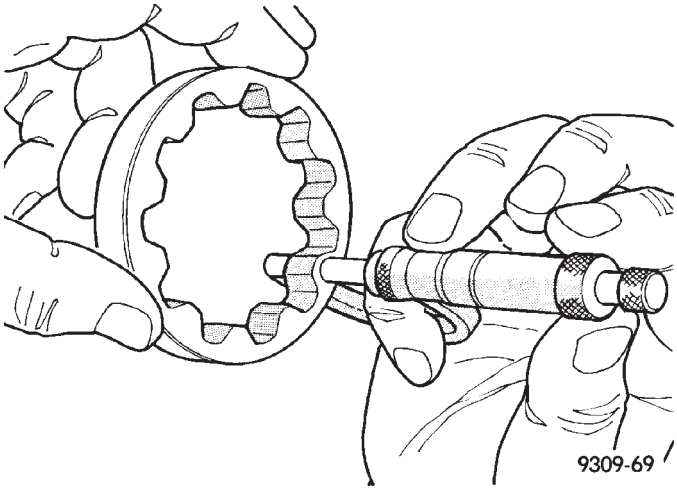

Fig. 98 Measuring Outer Rotor Thickness

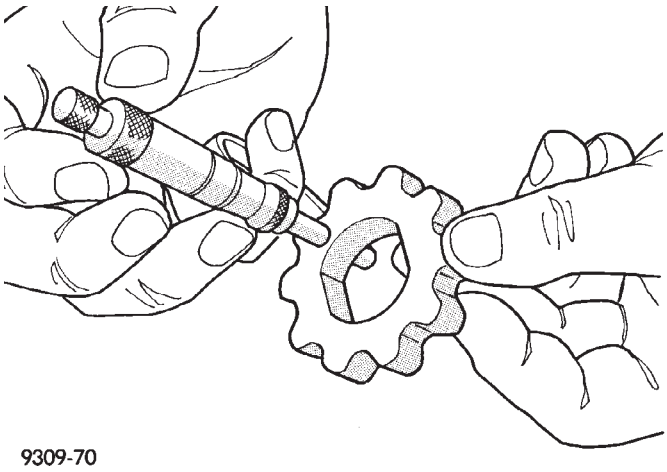

Fig. 99 Measuring Inner Rotor Thickness

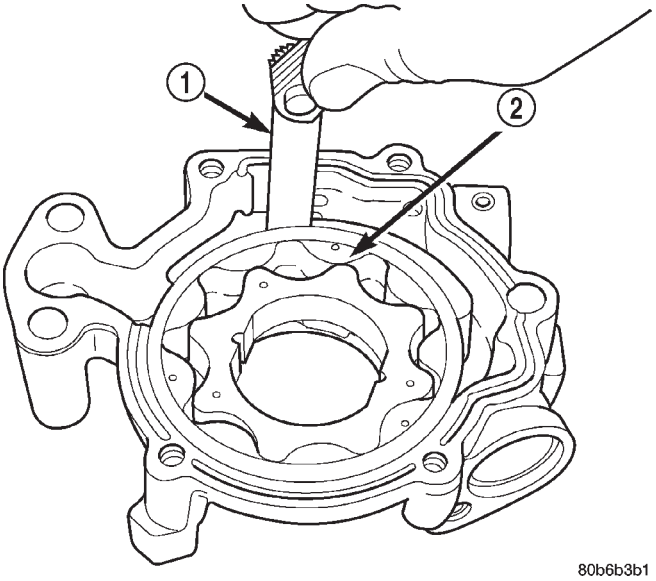

Fig. 100 Measuring Outer Rotor Clearance in

1 - FEELER GAUGE
2 - OUTER ROTOR

OIL PUMP (Continued)

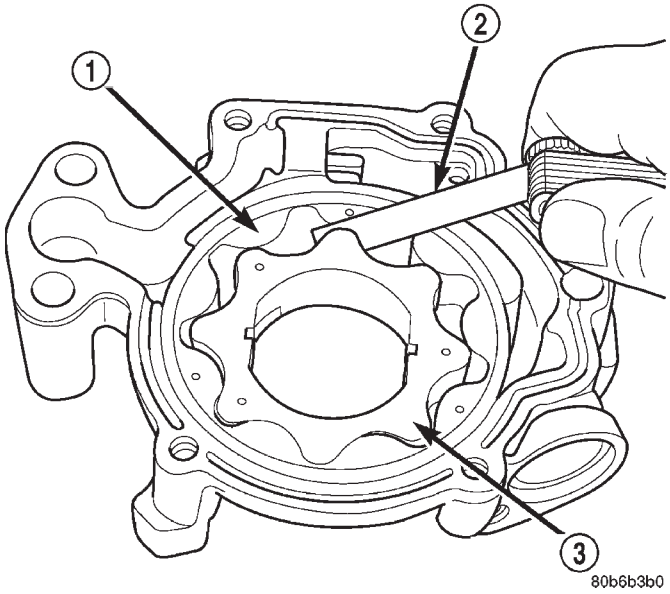

Fig. 101 Measuring Clearance Between Rotors

1 - OUTER ROTOR
2 - FEELER GAUGE
3 - INNER ROTOR

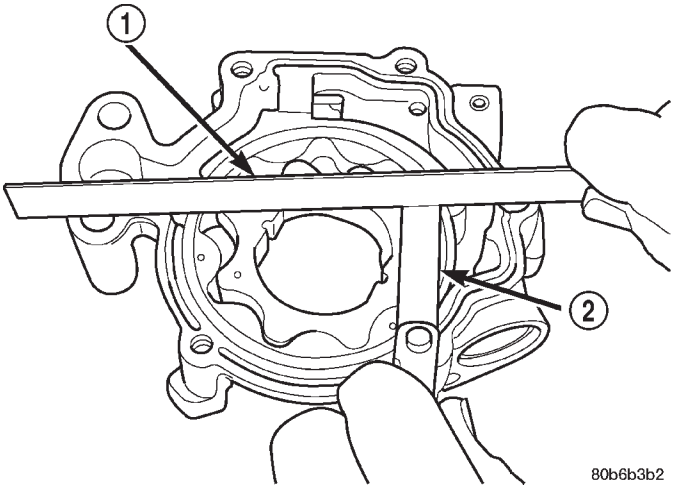

Fig. 102 Measuring Clearance Over Rotors

1 - STRAIGHT EDGE
2 - FEELER GAUGE

ASSEMBLE

(1) Wash all parts in a suitable solvent and inspect carefully for damage or wear.

(2) Install inner and outer rotors

(3) Install oil pump cover plate and install cover bolts and tighten them to 12 N·m (105 in. lbs.).

(4) Prime oil pump before installation by filling rotor cavity with engine oil.

(5) If oil pressure is low and pump is within specifications, inspect for worn engine bearings or other causes for oil pressure loss.

INSTALLATION

(1) Position the oil pump onto the crankshaft and install two oil pump retaining bolts.

(2) Position the primary timing chain tensioner and install the two retaining bolts.

(3) Tighten the oil pump and primary timing chain tensioner retaining bolts to 28 N·m (250 in. lbs.) in the sequence shown (Fig. 103).

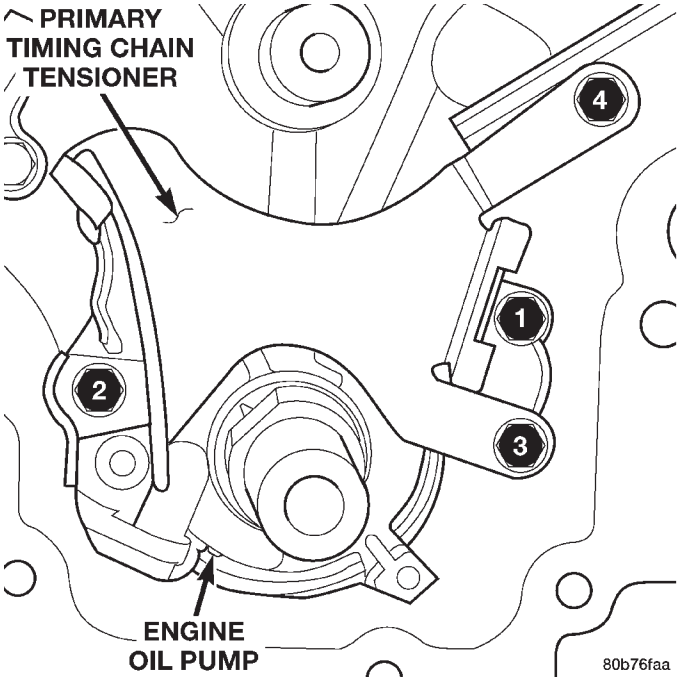

Fig. 103 Oil Pump and Primary Timing Chain Tightening Sequence

(4) Install the secondary timing chain tensioners and timing chains (Refer to 9 - ENGINE/VALVE TIMING/TIMING BELT/CHAIN AND SPROCKETS - INSTALLATION).

(5) Install the timing chain cover (Refer to 9 - ENGINE/VALVE TIMING/TIMING BELT / CHAIN COVER(S) - INSTALLATION).

(6) Install the pick-up tube and oil pan (Refer to 9 - ENGINE/LUBRICATION/OIL PAN - INSTALLATION).

INTAKE MANIFOLD

DESCRIPTION

The intake manifold is made of a composite material and features long runners which maximizes low end torque. The intake manifold uses single plane sealing which consist of eight individual press in

INTAKE MANIFOLD (Continued)

place port gaskets to prevent leaks. Eight studs and two bolts are used to fasten the intake to the head.

DIAGNOSIS AND TESTING—INTAKE MANIFOLD LEAKAGE

An intake manifold air leak is characterized by lower than normal manifold vacuum. Also, one or more cylinders may not be functioning.

WARNING: USE EXTREME CAUTION WHEN THE ENGINE IS OPERATING. DO NOT STAND IN A DIRECT LINE WITH THE FAN. DO NOT PUT YOUR HANDS NEAR THE PULLEYS, BELTS OR THE FAN. DO NOT WEAR LOOSE CLOTHING.

(1) Start the engine.
(2) Spray a small stream of water at the suspected leak area.
(3) If a change in RPM is observed the area of the suspected leak has been found.
(4) Repair as required.

REMOVAL

(1) Disconnect negative cable from battery.
(2) Remove air cleaner housing and throttle body resonator (Fig. 104).

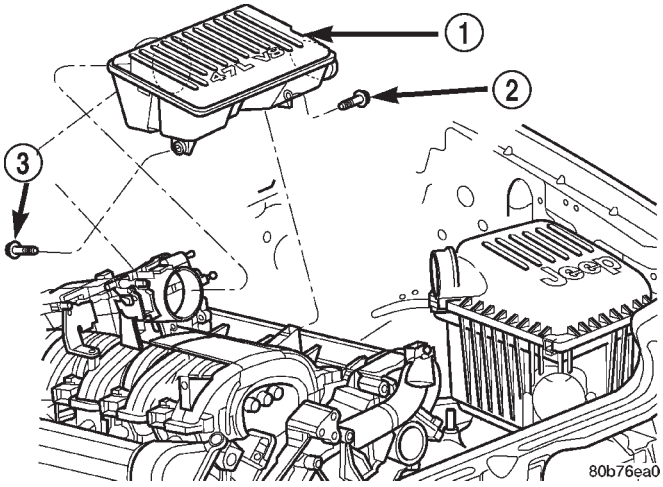

Fig. 104 Throttle Body Resonator

1 - THROTTLE BODY RESONATOR
2 - BOLT
3 - BOLT

(3) Disconnect throttle and speed control cables.
(4) Disconnect electrical connectors for the following components:

- Manifold Absolute Pressure (MAP) Sensor
- Intake Air Temperature (IAT) Sensor
- Throttle Position (TPS) Sensor
- Coolant Temperature (CTS) Sensor
- Idle Air Control (IAC) Motor

(5) Disconnect vapor purge hose, brake booster hose, speed control servo hose, positive crankcase ventilation (PCV) hose.
(6) Remove accessory drive belt (Refer to 7 - COOLING/ACCESSORY DRIVE/DRIVE BELTS - REMOVAL).
(7) Disconnect generator electrical connections.
(8) Unbolt the generator and move it away from the intake manifold for clearance.
(9) Disconnect air conditioning compressor electrical connections.
(10) Unbolt the air conditioning compressor and move it away from the intake manifold for clearance.
(11) Disconnect left and right radio suppressor straps.
(12) Disconnect and remove ignition coil towers (Refer to 8 - ELECTRICAL/IGNITION CONTROL/ IGNITION COIL - REMOVAL).
(13) Remove top oil dipstick tube retaining bolt and ground strap.
(14) Bleed pressure from fuel system (Refer to 14 - FUEL SYSTEM/FUEL DELIVERY - STANDARD PROCEDURE).
(15) Remove fuel rail (Refer to 14 - FUEL SYSTEM/FUEL DELIVERY/FUEL RAIL - REMOVAL).
(16) Remove throttle body assembly and mounting bracket.
(17) Drain cooling system below coolant temperature level (Refer to 7 - COOLING - STANDARD PROCEDURE).
(18) Remove coolant temperature sensor (Refer to 7 - COOLING/ENGINE/ENGINE COOLANT TEMP SENSOR - REMOVAL).
(19) Remove cowl to hood seal. (Refer to 23 - BODY/WEATHERSTRIP/SEALS/COWL WEATHERSTRIP - REMOVAL).
(20) Remove right side engine lifting stud.
(21) Remove intake manifold retaining fasteners, in
(21) reverse order of tightening sequence (Fig. 105).

NOTE: Intake must be lifted upward and level in the front and rear to clear the cowl. Interference with the cowl will occur during removal.

(22) Remove intake manifold.

CLEANING

NOTE: There is NO approved repair procedure for the intake manifold. If severe damage is found during inspection, the intake manifold must be replaced.

INTAKE MANIFOLD (Continued)

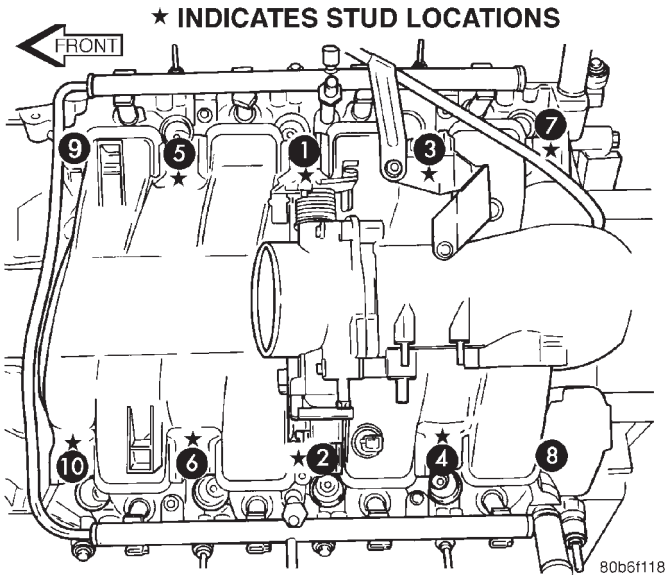

Fig. 105 Intake Manifold Tightening Sequence

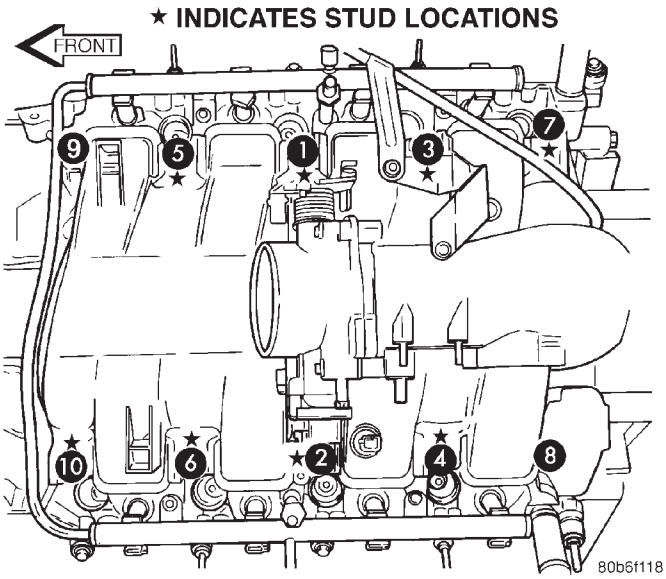

Fig. 106 Intake Manifold Tightening Sequence

Before installing the intake manifold thoroughly clean the mating surfaces. Use a suitable cleaning solvent, then air dry.

INSPECTION

(1) Inspect the intake sealing surface for cracks, nicks and distortion.

(2) Inspect the intake manifold vacuum hose fittings for looseness or blockage.

(3) Inspect the manifold to throttle body mating surface for cracks, nicks and distortion.

INSTALLATION

(1) Install intake manifold gaskets.

(2) Install intake manifold.

(3) Install intake manifold retaining bolts and tighten in sequence shown in (Fig. 106) to 12 N·m (105 in. lbs.).

(4) Install left and right radio suppressor straps.

(5) Install throttle body assembly.

(6) Install throttle cable bracket.

(7) Connect throttle cable and speed control cable to throttle body.

(8) Install fuel rail (Refer to 14 - FUEL SYSTEM/FUEL DELIVERY/FUEL RAIL - INSTALLATION).

(9) Install ignition coil towers (Refer to 8 - ELECTRICAL/IGNITION CONTROL/IGNITION COIL - INSTALLATION).

(10) Install coolant temperature sensor (Refer to 7 - COOLING/ENGINE/ENGINE COOLANT TEMP SENSOR - INSTALLATION).

(11) Connect electrical connectors for the following components:

- Manifold Absolute Pressure (MAP) Sensor
- Intake Air Temperature (IAT) Sensor
- Throttle Position (TPS) Sensor
- Coolant Temperature (CTS) Sensor
- Idle Air Control (IAC) Motor
- Ignition coil towers
- Fuel injectors

(12) Install top oil dipstick tube retaining bolt and ground strap.

(13) Install right side engine lifting stud.

(14) Install generator including electrical connections (Refer to 8 - ELECTRICAL/CHARGING/GENERATOR - INSTALLATION).

(15) Connect Vapor purge hose, Brake booster hose, Speed control servo hose, Positive crankcase ventilation (PCV) hose.

(16) Install air conditioning compressor including electrical connections.

(17) Fill cooling system (Refer to 7 - COOLING - STANDARD PROCEDURE).

(18) Install accessory drive belt (Refer to 7 - COOLING/ACCESSORY DRIVE/DRIVE BELTS - INSTALLATION).

(19) Install cowl to hood seal (Refer to 23 - BODY/WEATHERSTRIP/SEALS/COWL WEATHERSTRIP - INSTALLATION).

(20) Install air cleaner housing and throttle body resonator. Tighten resonator bolts 4.5 N·m (40 in. lbs.).

(21) Connect negative cable to battery.

EXHAUST MANIFOLD - LEFT

DESCRIPTION

The exhaust manifolds are log style with a patented flow enhancing design to maximize performance. The exhaust manifolds are made of high silicon molybdenum cast iron. A perforated core

EXHAUST MANIFOLD - LEFT (Continued)

graphite exhaust manifold gasket is used to improve sealing to the cylinder head. The exhaust manifolds are covered by a three layer laminated heat shield for thermal protection and noise reduction. The heat shields are fastened with a torque prevailing nut that is backed off slightly to allow for the thermal expansion of the exhaust manifold.

REMOVAL

(1) Disconnect negative cable for battery.
(2) Hoist vehicle.
(3) Disconnect exhaust pipe at manifold.
(4) Lower vehicle.
(5) Remove air cleaner housing and tube.
(6) Remove the front two exhaust heat shield retaining fasteners. Raise vehicle and remove the fasteners at rear of heat shield.
(7) Remove heat shield (Fig. 107).
(8) Lower vehicle and remove the upper exhaust manifold retaining bolts (Fig. 107).
(9) Raise vehicle and remove the lower exhaust manifold retaining bolts (Fig. 107).
(10) Remove exhaust manifold and gasket (Fig. 107). Manifold is removed from below the engine compartment.

CLEANING

(1) Clean the exhaust manifold using a suitable cleaning solvent, then allow to air dry.
(2) Clean all gasket residue from the manifold mating surface.

INSPECTION

(1) Inspect the exhaust manifold for cracks in the mating surface and at every mounting bolt hole.
(2) Using a straight edge and a feeler gauge, check the mating surface for warp and twist.
(3) Inspect the manifold to exhaust pipe mating surface for cracks, gouges, or other damage that would prevent sealing.

INSTALLATION

(1) Install exhaust manifold and gasket from below engine compartment.
(2) Install lower exhaust manifold fasteners (Fig. 107). DO NOT tighten until all fasteners are in place.
(3) Lower vehicle and install upper exhaust manifold fasteners (Fig. 107). Tighten all manifold bolts starting at center and working outward to 25 N·m (18 ft. lbs.).

CAUTION: Over tightening heat shield fasteners, may cause shield to distort and/or crack.

(4) Install exhaust manifold heat shield (Fig. 107). Tighten fasteners to 8 N·m (72 in. lbs.), then loosen 45 degrees.
(5) Install air cleaner housing and tube.
(6) Connect exhaust pipe to manifold.
(7) Connect negative cable to battery.

EXHAUST MANIFOLD - RIGHT

DESCRIPTION

The exhaust manifolds are log style with a patented flow enhancing design to maximize performance. The exhaust manifolds are made of high silicon molybdenum cast iron. A perforated core graphite exhaust manifold gasket is used to improve sealing to the cylinder head. The exhaust manifolds are covered by a three layer laminated heat shield for thermal protection and noise reduction. The heat shields are fastened with a torque prevailing nut that is backed off slightly to allow for the thermal expansion of the exhaust manifold.

REMOVAL

(1) Disconnect negative cable for battery.
(2) Remove battery from vehicle.
(3) Remove Power Distribution Center (PDC) fasteners and set aside.
(4) Remove battery tray assembly.
(5) Remove washer bottle assembly
(6) Remove accessory drive belt (Refer to 7 - COOLING/ACCESSORY DRIVE/DRIVE BELTS - REMOVAL).
(7) Remove A/C compressor from mounting and set aside.
(8) Remove A/C accumulator support bracket fastener.
(9) Drain coolant (Refer to 7 - COOLING - STANDARD PROCEDURE).
(10) Remove heater hoses at engine.
(11) Remove fasteners attaching exhaust manifold heat shield (Fig. 108).
(12) Remove heat shield (Fig. 108).
(13) Remove upper exhaust manifold attaching fasteners (Fig. 108).
(14) Raise vehicle on hoist.
(15) Disconnect exhaust pipe from manifold.
(16) Remove fasteners attaching starter. Move starter aside.
(17) Remove lower exhaust manifold attaching fasteners.
(18) Remove exhaust manifold and gasket (Fig. 108). Manifold is removed from below the engine compartment.

EXHAUST MANIFOLD - RIGHT (Continued)

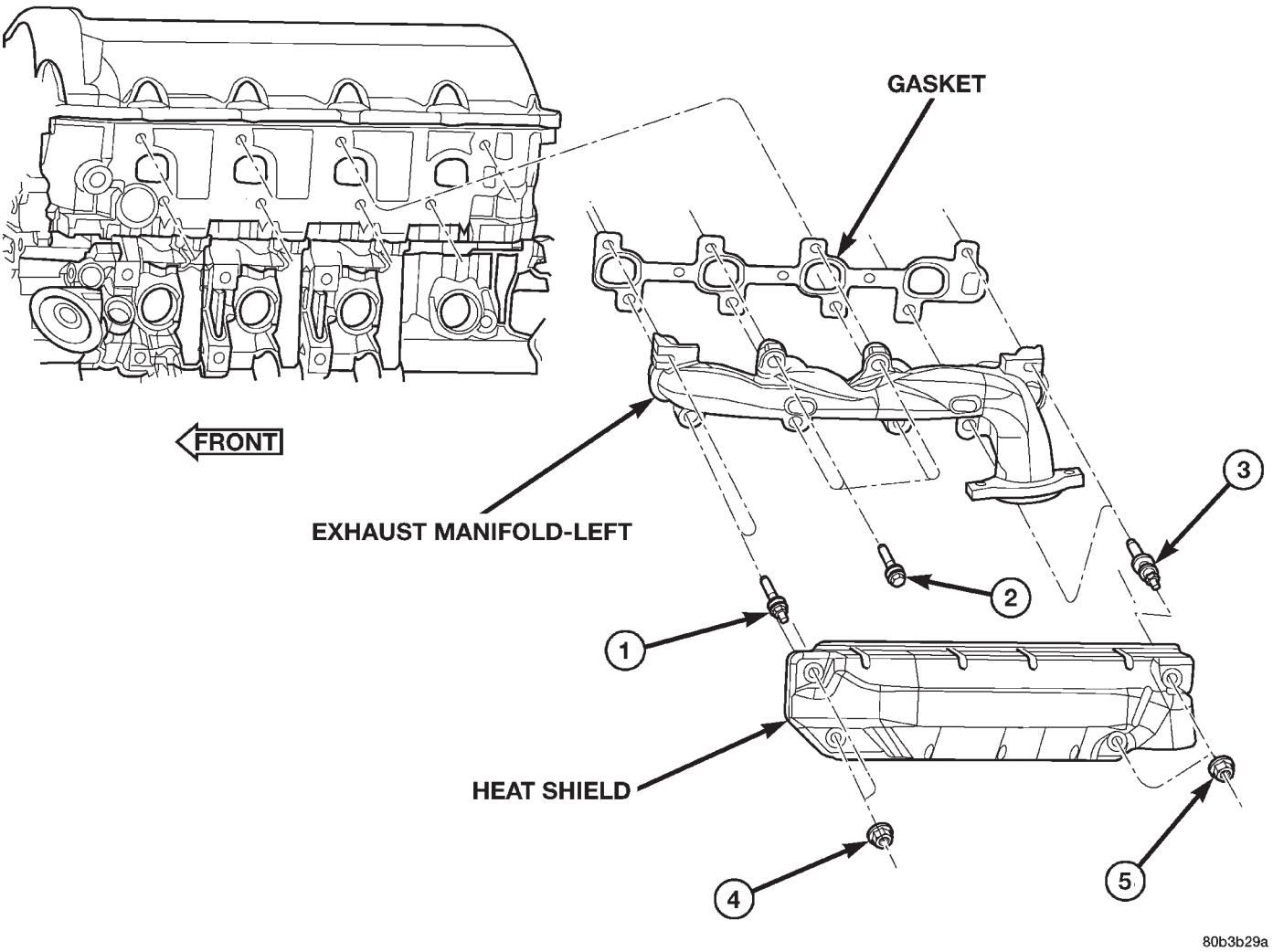

Fig. 107 Exhaust Manifold—Left

ITEM	DESCRIPTION	TORQUE	ITEM	DESCRIPTION	TORQUE
1	Stud (Qty 2)		4	Nut (Qty 2)	8 N·m (72 in. lbs.), then loosen 45 degrees
2	Bolt (Qty 4)	25 N·m (18 ft. lbs.)	5	Nut (Qty 2)	
3	Stud (Qty 2)				

CLEANING

(1) Clean the exhaust manifold using a suitable cleaning solvent, then allow to air dry.

(2) Clean all gasket residue from the manifold mating surface.

INSPECTION

(1) Inspect the exhaust manifold for cracks in the mating surface and at every mounting bolt hole.

(2) Using a straight edge and a feeler gauge, check the mating surface for warp and twist.

(3) Inspect the manifold to exhaust pipe mating surface for cracks, gouges, or other damage that would prevent sealing.

INSTALLATION

(1) Install exhaust manifold and gasket from below engine compartment.

(2) Install lower exhaust manifold fasteners. DO NOT tighten until all fasteners are in place.

(3) Lower vehicle and install upper exhaust manifold fasteners. Tighten all manifold bolts starting at center and working outward to 25 N·m (18 ft. lbs.).

EXHAUST MANIFOLD - RIGHT (Continued)

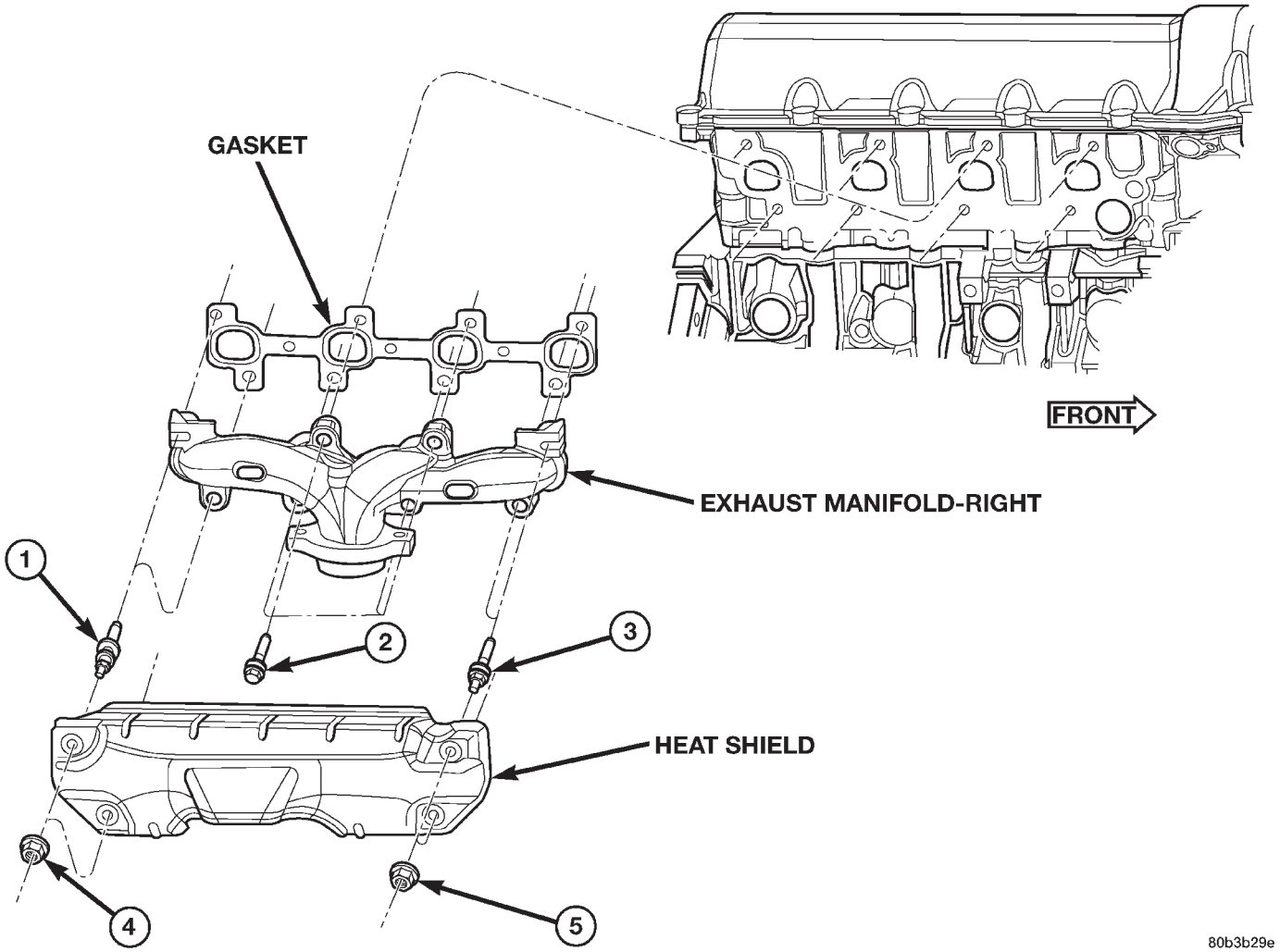

Fig. 108 Exhaust Manifold—Right

ITEM	DESCRIPTION	TORQUE	ITEM	DESCRIPTION	TORQUE
1	Stud (Qty 2)		4	Nut (Qty 2)	8 N·m (72 in. lbs.), then loosen 45 degrees
2	Bolt (Qty 4)	25 N·m (18 ft. lbs.)	5	Nut (Qty 2)	
3	Stud (Qty 2)				

CAUTION: Over tightening heat shield fasteners, may cause shield to distort and/or crack.

(4) Install exhaust manifold heat shield. Tighten fasteners to 8 N·m (72 in. lbs.), then loosen 45 degrees.

(5) Install starter and fasteners.

(6) Connect exhaust pipe to manifold.

(7) Connect heater hoses at engine.

(8) Install fastener attaching A/C accumulator.

(9) Install A/C compressor and fasteners.

(10) Install accessory drive belt (Refer to 7 - COOLING/ACCESSORY DRIVE/DRIVE BELTS - INSTALLATION).

(11) Install washer bottle and battery tray assembly.

(12) Install PDC.

(13) Install battery and connect cables.

(14) Fill cooling system (Refer to 7 - COOLING - STANDARD PROCEDURE).

VALVE TIMING

DESCRIPTION—TIMING DRIVE SYSTEM

The timing drive system has been designed to provide quiet performance and reliability to support a **non-free wheeling** engine. Specifically the intake

VALVE TIMING (Continued)

valves are non-free wheeling and can be easily damaged with forceful engine rotation if camshaft-to-crankshaft timing is incorrect. The timing drive system consists of a primary chain and two secondary timing chain drives (Fig. 109).

OPERATION—TIMING DRIVE SYSTEM

The primary timing chain is a single inverted tooth type. The primary chain drives the large fifty tooth idler sprocket directly from a 25 tooth crankshaft sprocket. Primary chain motion is controlled by a pivoting leaf spring tensioner arm and a fixed guide. The arm and the guide both use nylon plastic wear faces for low friction and long wear. The primary chain receives oil splash lubrication from the secondary chain drive and oil pump leakage. The idler sprocket assembly connects the primary and secondary chain drives. The idler sprocket assembly consists of two integral thirty tooth sprockets and a fifty tooth sprocket that is splined to the assembly. The spline joint is a non – serviceable press fit anti rattle type. A spiral ring is installed on the outboard side of the fifty tooth sprocket to prevent spline disengagement. The idler sprocket assembly spins on a stationary idler shaft. The idler shaft is press-fit into the cylinder block. A large washer on the idler shaft bolt and the rear flange of the idler shaft are used to control sprocket thrust movement. Pressurized oil is routed through the center of the idler shaft to provide lubrication for the two bushings used in the idler sprocket assembly.

There are two secondary drive chains, both are inverted tooth type, one to drive the camshaft in each SOHC cylinder head. There are no shaft speed changes in the secondary chain drive system. Each secondary chain drives a thirty tooth cam sprocket

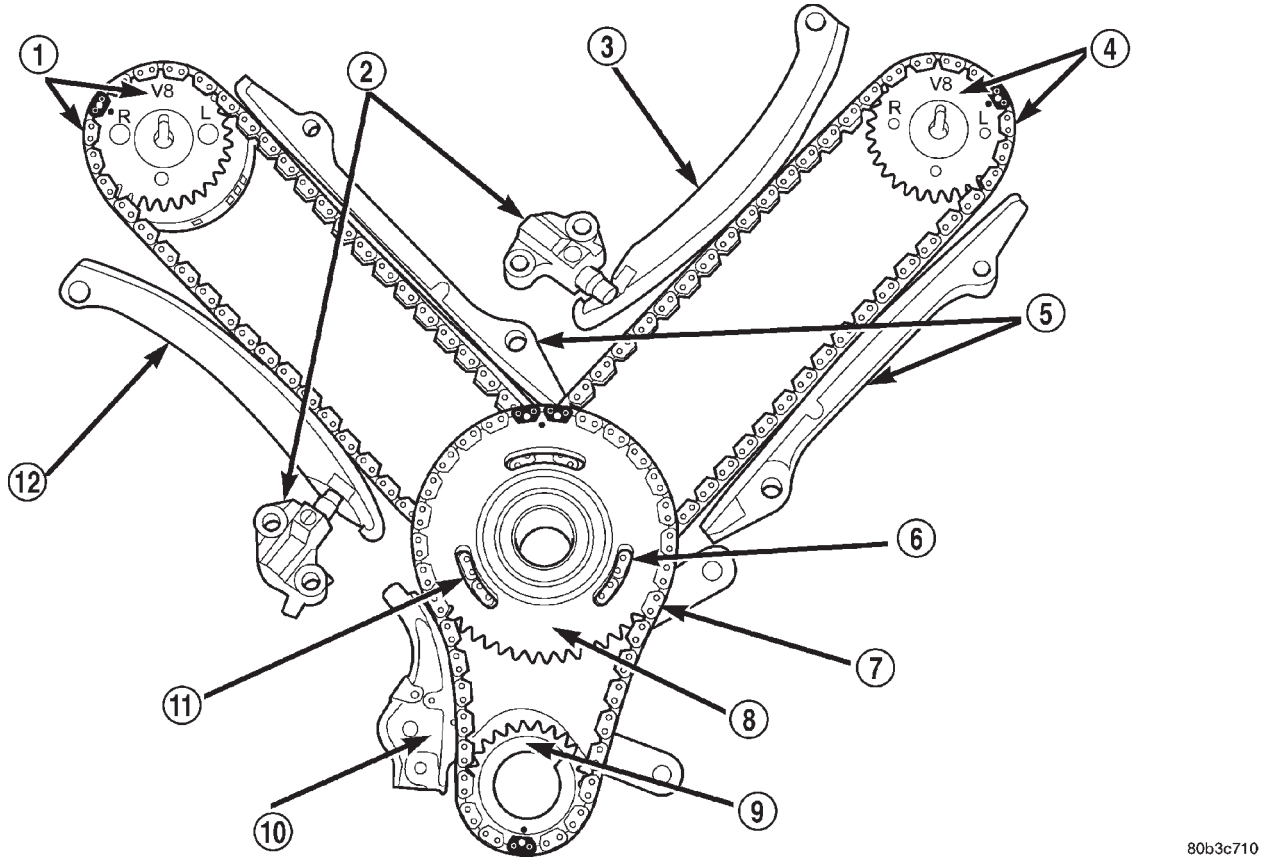

Fig. 109 Timing Drive System

1 - RIGHT CAMSHAFT SPROCKET AND SECONDARY CHAIN
2 - SECONDARY TIMING CHAIN TENSIONER (LEFT AND RIGHT SIDE NOT COMMON)
3 - SECONDARY TENSIONER ARM
4 - LEFT CAMSHAFT SPROCKET AND SECONDARY CHAIN
5 - CHAIN GUIDE
6 - TWO PLATED LINKS ON RIGHT CAMSHAFT CHAIN
7 - PRIMARY CHAIN
8 - IDLER SPROCKET
9 - CRANKSHAFT SPROCKET
10 - PRIMARY CHAIN TENSIONER
11 - TWO PLATED LINKS ON LEFT CAMSHAFT CHAIN
12 - SECONDARY TENSIONER ARM

VALVE TIMING (Continued)

directly from the thirty tooth sprocket on the idler sprocket assembly. A fixed chain guide and a hydraulic oil damped tensioner are used to maintain tension in each secondary chain system. The hydraulic tensioners for the secondary chain systems are fed pressurized oil from oil reservoir pockets in the block. Each tensioner also has a mechanical ratchet system that limits chain slack if the tensioner piston bleeds down after engine shut down. The tensioner arms and guides also utilize nylon wear faces for low friction and long wear. The secondary timing chains receive lubrication from a small orifice in the tensioners. This orifice is protected from clogging by a fine mesh screen which is located on the back of the hydraulic tensioners.

STANDARD PROCEDURE—ENGINE TIMING VERIFICATION

CAUTION: The 4.7L is a non free-wheeling design engine. Therefore, correct engine timing is critical.

NOTE: Components referred to as left hand or right hand are as viewed from the drivers position inside the vehicle.

NOTE: The blue link plates on the chains and the dots on the camshaft drive sprockets may not line up during the timing verification procedure. The blue link plates are lined up with the sprocket dots only when re-timing the complete timing drive. Once the timing drive is rotated blue link-to-dot alignment is no longer valid.

Engine base timing can be verified by the following procedure:

(1) Remove the cylinder head covers (Refer to 9 - ENGINE/CYLINDER HEAD/CYLINDER HEAD COVER(S) - REMOVAL).

(2) Using a mirror, locate the TDC arrow on the front cover (Fig. 110). Rotate the crankshaft until the mark on the crankshaft damper is aligned with the TDC arrow on the front cover. The engine is now at TDC.

(3) Note the location of the V8 mark stamped into the camshaft drive gears (Fig. 111). If the V8 mark on each camshaft drive gear is at the twelve o'clock position, the engine is at TDC (cylinder #1) on the exhaust stroke. If the V8 mark on each gear is at the six o'clock position, the engine is at TDC (cylinder #1) on the compression stroke.

(4) If both of the camshaft drive gears are off in the same or opposite directions, the primary chain or both secondary chains are at fault. Refer to Timing Chain and Sprockets procedure in this section.

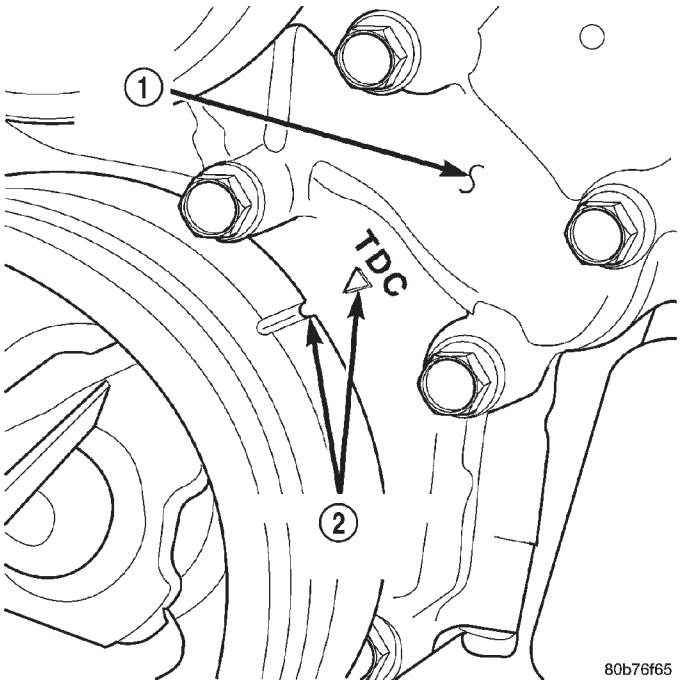

Fig. 110 Engine Top Dead Center (TDC) Indicator Mark

1 - TIMING CHAIN COVER
2 - CRANKSHAFT TIMING MARKS

(5) If only one of the camshaft drive gears is off and the other is correct, the problem is confined to one secondary chain. Refer to Single camshaft timing, in this procedure.

(6) If both camshaft drive gear V8 marks are at the twelve o'clock or the six o' clock position the engine base timing is correct. Reinstall the cylinder head covers.

SINGLE CAMSHAFT TIMING

NOTE: to adjust the timing on one camshaft, preform the following procedure.

(1) Using Chain Tensioner Wedge, special tool 8350, stabilize the secondary chain drive (Fig. 112). For reference purposes, mark the chain-to-sprocket position (Fig. 112).

(2) Remove the camshaft drive gear retaining bolt.

(3) Carefully remove the camshaft drive gear from the camshaft.

(4) Re-index the camshaft drive gear in the chain until the V8 mark is at the same position as the V8 mark on the opposite camshaft drive gear.

NOTE: When gripping the camshaft, place the pliers on the tube portion of the camshaft only. Do not grip the lobes or the sprocket areas.

VALVE TIMING (Continued)

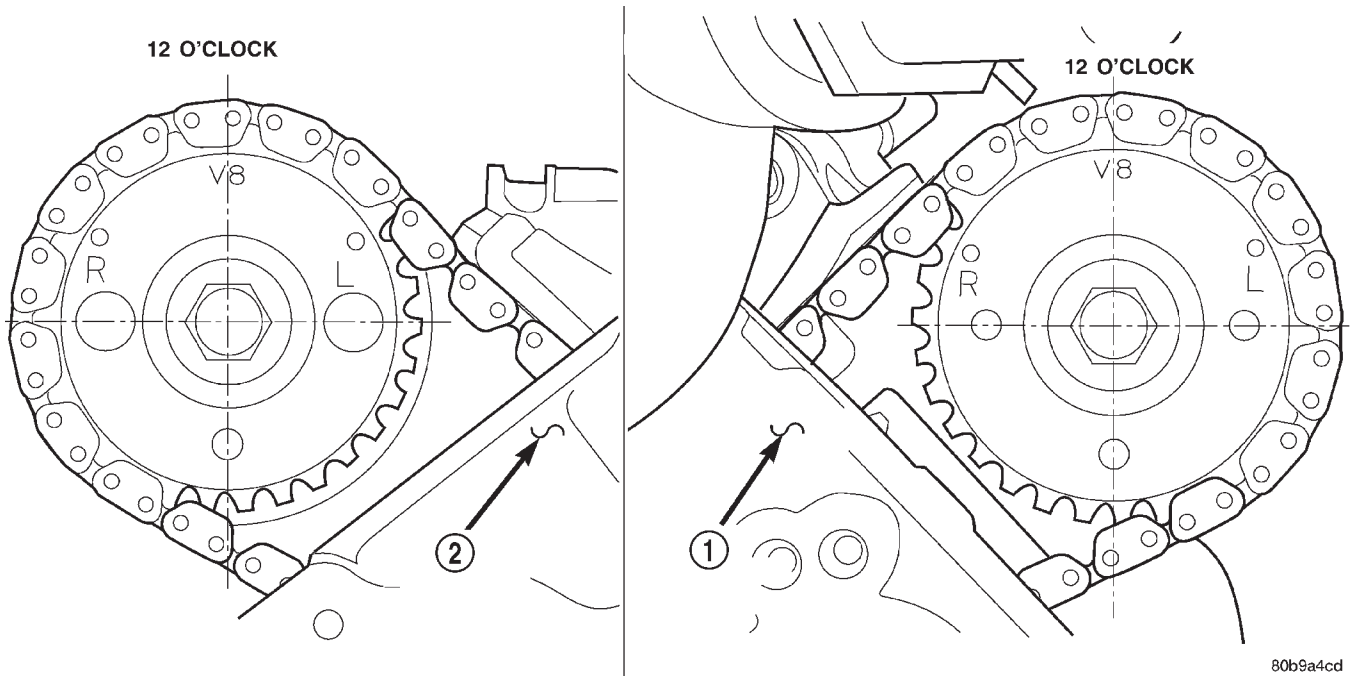

Fig. 111 Camshaft Sprocket V8 Marks

1 - LEFT CYLINDER HEAD
2 - RIGHT CYLINDER HEAD

(5) Using a suitable pair of adjustable pliers, rotate the camshaft until the alignment dowel on the camshaft is aligned with the slot in the camshaft drive gear (Fig. 113).

CAUTION: Remove excess oil from camshaft sprocket retaining bolt before reinstalling bolt. Failure to do so may cause over-torqueing of bolt resulting in bolt failure.

(6) Position the camshaft drive gear onto the camshaft, remove oil from bolt then install the retaining bolt. Using Special Tools, Spanner Wrench 6958 with Adapter Pins 8346 and a suitable torque wrench, Tighten retaining bolt to 122N·m (90 ft. Lbs.) (Fig. 114) (Fig. 115).

(7) Remove special tool 8350.

(8) Rotate the crankshaft two full revolutions, then reverify that the camshaft drive gear V8 marks are in fact aligned.

(9) Install the cylinder head covers (Refer to 9 - ENGINE/CYLINDER HEAD/CYLINDER HEAD COVER(S) - INSTALLATION).

STANDARD PROCEDURE—MEASURING TIMING CHAIN WEAR

NOTE: This procedure must be performed with the timing chain cover removed.

(1) Remove the timing chain cover. (Refer to 9 - ENGINE/VALVE TIMING/TIMING BELT / CHAIN COVER(S) - REMOVAL).

(2) To determine if the secondary timing chains are worn, rotate the engine clockwise until maximum tensioner piston extension is obtained. Measure the distance between the secondary timing chain tensioner housing and the step ledge on the piston (Fig. 116). The measurement at point (A) must be less than 15mm (0.5906 inches).

(3) If the measurement exceeds the specification the secondary timing chains are worn and require replacement. (Refer to 9 - ENGINE/VALVE TIMING/ TIMING BELT/CHAIN AND SPROCKETS - REMOVAL).

NOTE: If the secondary chains are to be replaced the primary chain and sprockets must also be replaced.

VALVE TIMING (Continued)

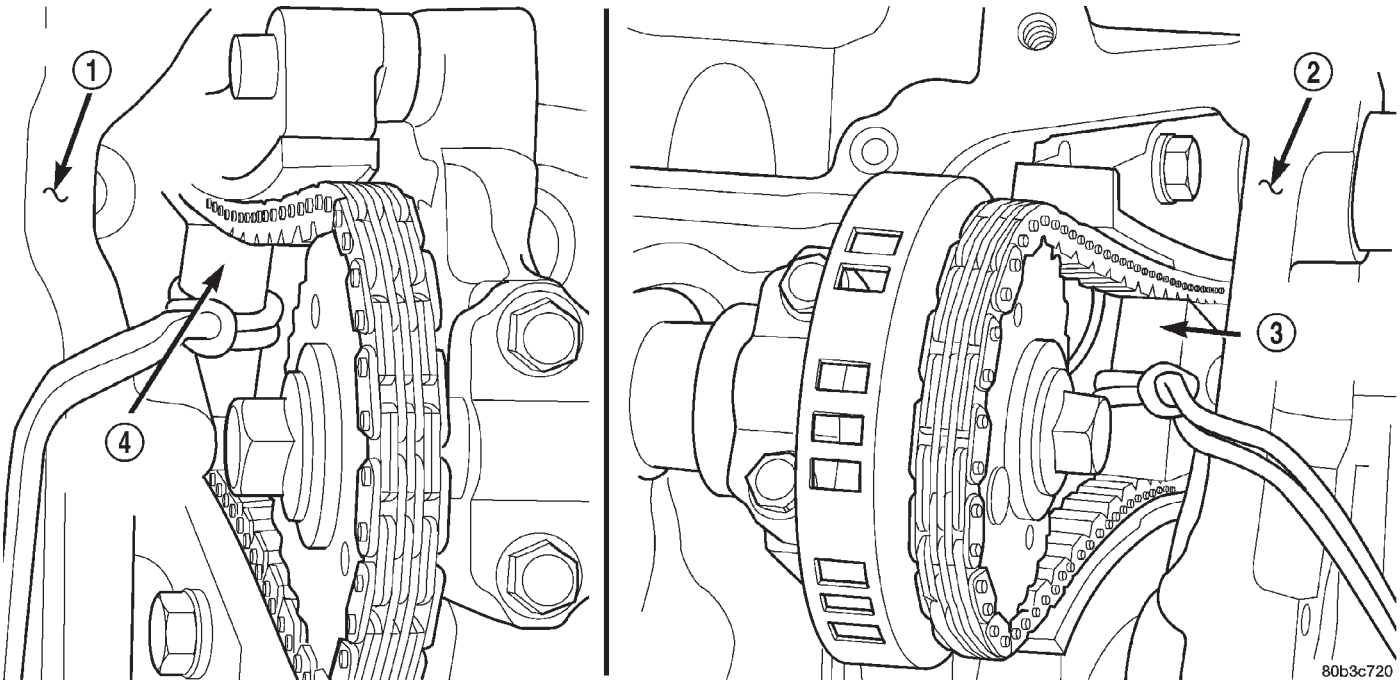

Fig. 112 Securing Timing Chain Tensioners Using Timing Chain Wedge

1 - LEFT CYLINDER HEAD
2 - RIGHT CYLINDER HEAD
3 - SPECIAL TOOL 8350 WEDGE
4 - SPECIAL TOOL 8350 WEDGE

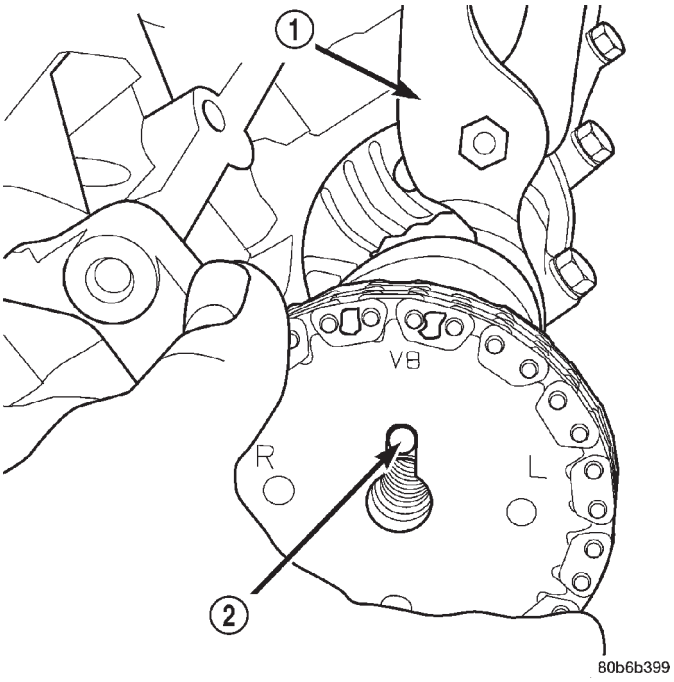

Fig. 113 Camshaft Dowel To

1 - ADJUSTABLE PLIERS
2 - CAMSHAFT DOWEL

VALVE TIMING (Continued)

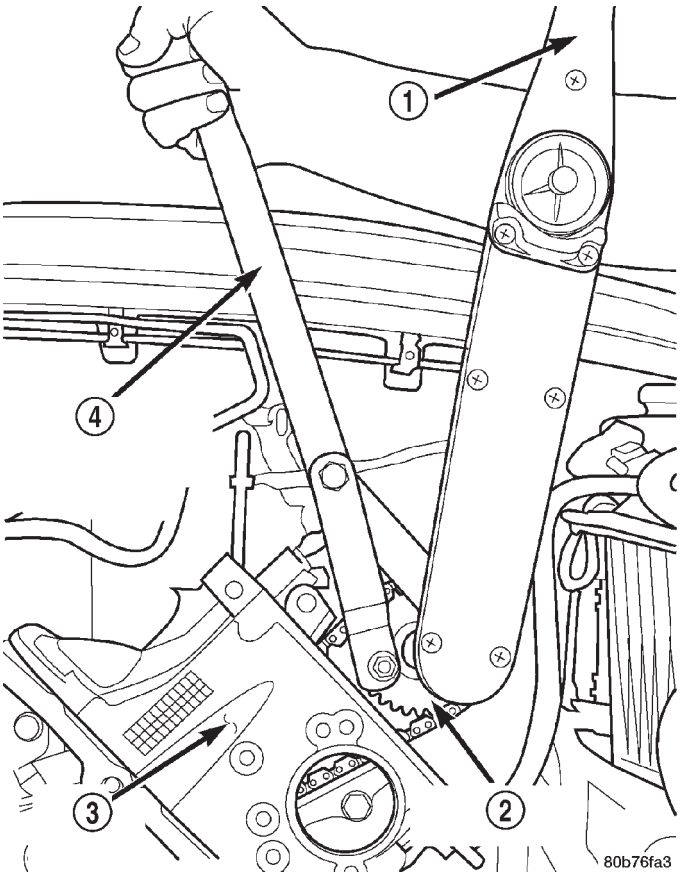

Fig. 114 Camshaft Sprocket Left Cylinder Head

1 - TORQUE WRENCH
2 - CAMSHAFT SPROCKET
3 - LEFT CYLINDER HEAD
4 - SPECIAL TOOL 6958 SPANNER WITH ADAPTER PINS 8346

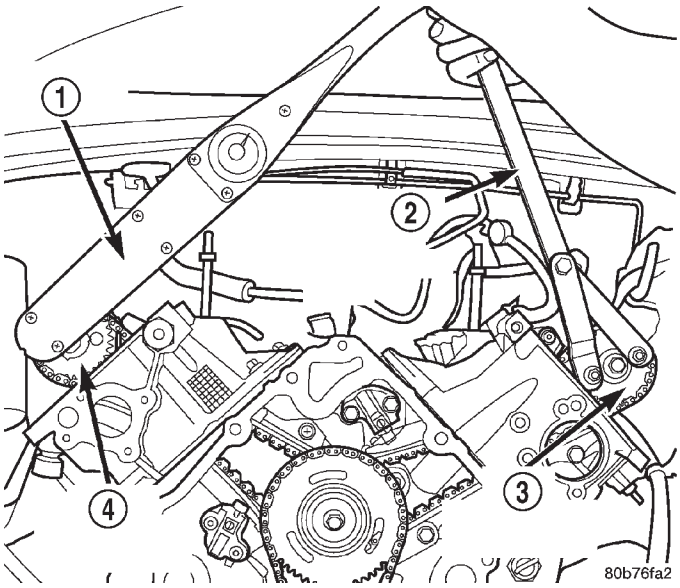

Fig. 115 Camshaft Sprocket Installation—Right Cylinder Head

1 - TORQUE WRENCH
2 - SPECIAL TOOL 6958 WITH ADAPTER PINS 8346
3 - LEFT CAMSHAFT SPROCKET
4 - RIGHT CAMSHAFT SPROCKET

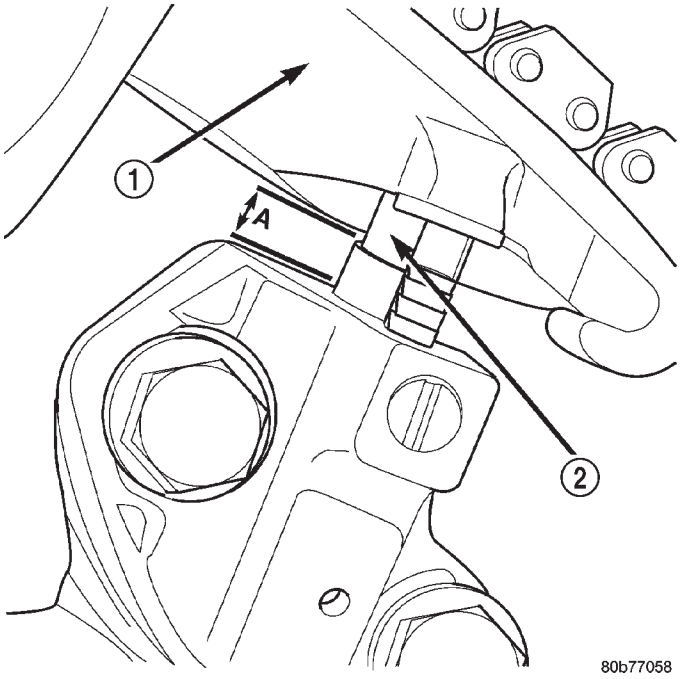

Fig. 116 Measuring Secondary Timing Chains For Wear

1 - SECONDARY TENSIONER ARM
2 - SECONDARY CHAIN TENSIONER PISTON

TIMING BELT / CHAIN COVER(S)

REMOVAL

(1) Disconnect the battery negative cable.

(2) Drain cooling system (Refer to 7 - COOLING - STANDARD PROCEDURE).

(3) Disconnect both heater hoses at timing cover.

(4) Disconnect lower radiator hose at engine.

(5) Remove crankshaft damper (Refer to 9 - ENGINE/ENGINE BLOCK/VIBRATION DAMPER - REMOVAL).

(6) Remove accessory drive belt tensioner assembly (Fig. 117).

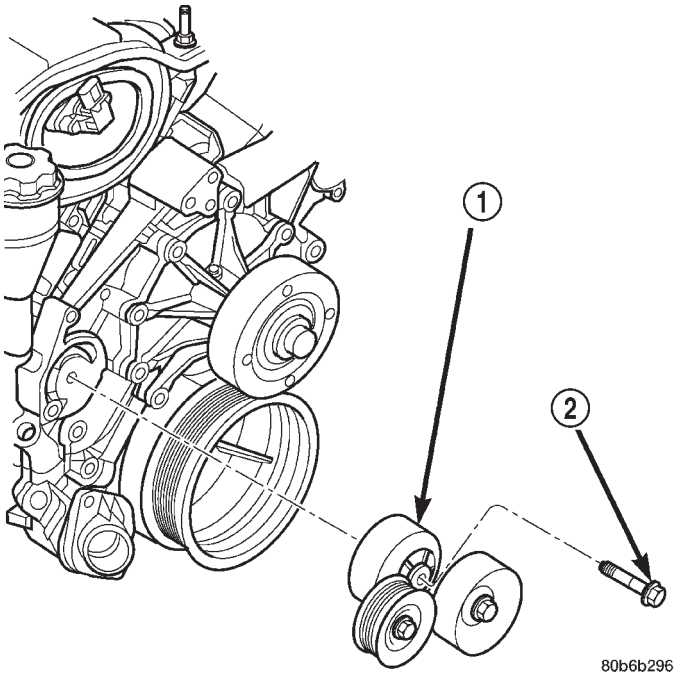

Fig. 117 Accessory Drive Belt Tensioner

1 - TENSIONER ASSEMBLY
2 - FASTENER TENSIONER TO FRONT COVER

(7) Remove the generator and A/C compressor.

(8) Remove cover and gasket (Fig. 118).

INSTALLATION

(1) Clean timing chain cover and block surface. Inspect cover gasket and replace as necessary.

(2) Install cover and gasket. Tighten fasteners in sequence as shown in (Fig. 119) to 54 N·m (40 ft. lbs.) .

(3) Install the A/C compressor and generator.

(4) Install crankshaft damper (Refer to 9 - ENGINE/ENGINE BLOCK/VIBRATION DAMPER - INSTALLATION).

(5) Install accessory drive belt tensioner assembly. Tighten fastener to 54 N·m (40 ft. lbs.).

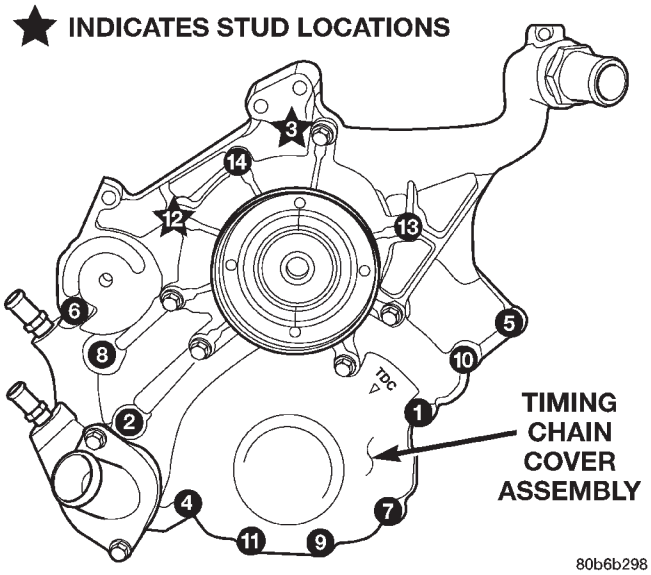

Fig. 118 Timing Chain Cover Fasteners

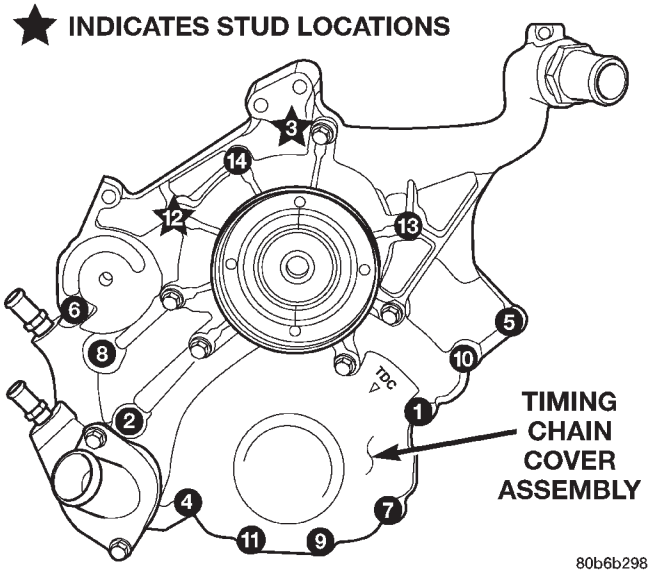

Fig. 119 Timing Chain Cover Fasteners

(6) Install lower radiator hose.

(7) Install both heater hoses.

(8) Fill cooling system (Refer to 7 - COOLING - STANDARD PROCEDURE).

(9) Connect the battery negative cable.

TIMING BELT/CHAIN AND SPROCKETS

REMOVAL

(1) Disconnect negative cable from battery.

(2) Drain cooling system (Refer to 7 - COOLING - STANDARD PROCEDURE).

TIMING BELT/CHAIN AND SPROCKETS (Continued)

(3) Remove right and left cylinder head covers (Refer to 9 - ENGINE/CYLINDER HEAD/CYLINDER HEAD COVER(S) - REMOVAL).

(4) Remove radiator fan (Refer to 7 - COOLING/ENGINE/RADIATOR FAN - REMOVAL).

(5) Rotate engine until timing mark on crankshaft damper aligns with TDC mark on timing chain cover (Fig. 120) (#1 cylinder exhaust stroke) and the camshaft sprocket "V8" marks are at the 12 o'clock position (Fig. 121).

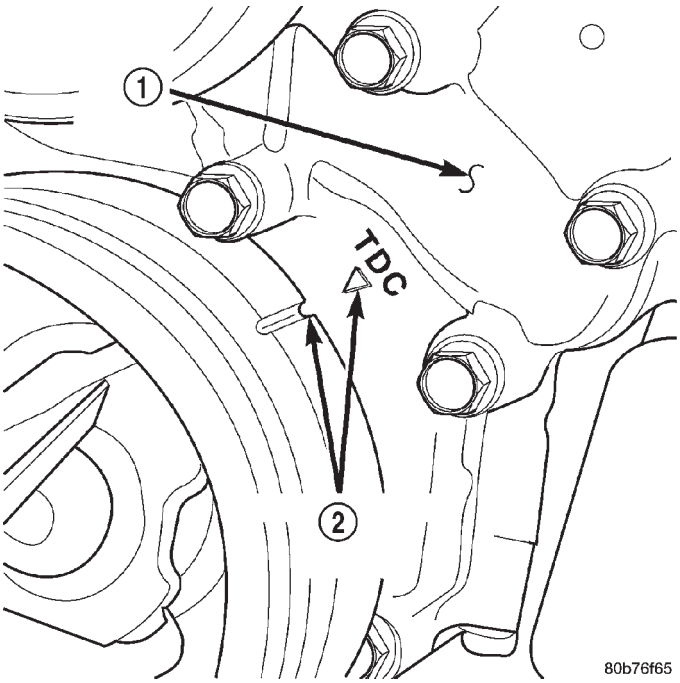

Fig. 120 Engine Top Dead Center (TDC) Indicator Mark

1 - TIMING CHAIN COVER
2 - CRANKSHAFT TIMING MARKS

(6) Remove power steering pump.

(7) Remove access plugs (2) from left and right cylinder heads for access to chain guide fasteners (Fig. 122).

(8) Remove the oil fill housing to gain access to the right side tensioner arm fastener.

(9) Remove crankshaft damper (Refer to 9 - ENGINE/ENGINE BLOCK/VIBRATION DAMPER - REMOVAL) and timing chain cover (Refer to 9 - ENGINE/VALVE TIMING/TIMING BELT / CHAIN COVER(S) - REMOVAL).

(10) Collapse and pin primary chain tensioner (Fig. 123).

CAUTION: Plate behind left secondary chain tensioner could fall into oil pan. Therefore, cover pan opening.

(11) Remove secondary chain tensioners.

(12) Remove camshaft position sensor from right cylinder head (Fig. 124).

CAUTION: Care should be taken not to damage camshaft target wheel. Do not hold target wheel while loosening or tightening camshaft sprocket. Do not place the target wheel near a magnetic source of any kind. A damaged or magnetized target wheel could cause a vehicle no start condition.

CAUTION: Do not forcefully rotate the camshafts or crankshaft independently of each other. Damaging intake valve to piston contact will occur. Ensure negative battery cable is disconnected to guard against accidental starter engagement.

(13) Remove left and right camshaft sprocket bolts.

(14) While holding the left camshaft steel tube with adjustable pliers, (Fig. 125) remove the left camshaft sprocket. Slowly rotate the camshaft approximately 15 degrees clockwise to a neutral position.

(15) While holding the right camshaft steel tube with adjustable pliers, (Fig. 126) remove the right camshaft sprocket. Slowly rotate the camshaft approximately 45 degrees counterclockwise to a neutral position.

(16) Remove idler sprocket assembly bolt.

(17) Slide the idler sprocket assembly and crank sprocket forward simultaneously to remove the primary and secondary chains.

(18) Remove both pivoting tensioner arms and chain guides.

(19) Remove chain tensioner.

INSPECTION

Inspect the following components:

- Sprockets for excessive tooth wear. Some tooth markings are normal and not a cause for sprocket replacement.
- Idler sprocket assembly bushing and shaft for excessive wear.
- Idler sprocket assembly spline joint. The joint should be tight with no backlash or axial movement.
- Chain guides and tensioner arms. Replace these parts if grooving in plastic face is more than 1 mm (0.039 in.) deep. If plastic face is severely grooved or melted, the tensioner lube jet may be clogged. The tensioner should be replaced.
- secondary chain tensioner piston and ratcheting device. Inspect for evidence of heavy contact between tensioner piston and tensioner arm. If this condition exist the tensioner and tensioner arm should be replaced.
- Primary chain tensioner plastic faces. Replace as required (Fig. 127).

TIMING BELT/CHAIN AND SPROCKETS (Continued)

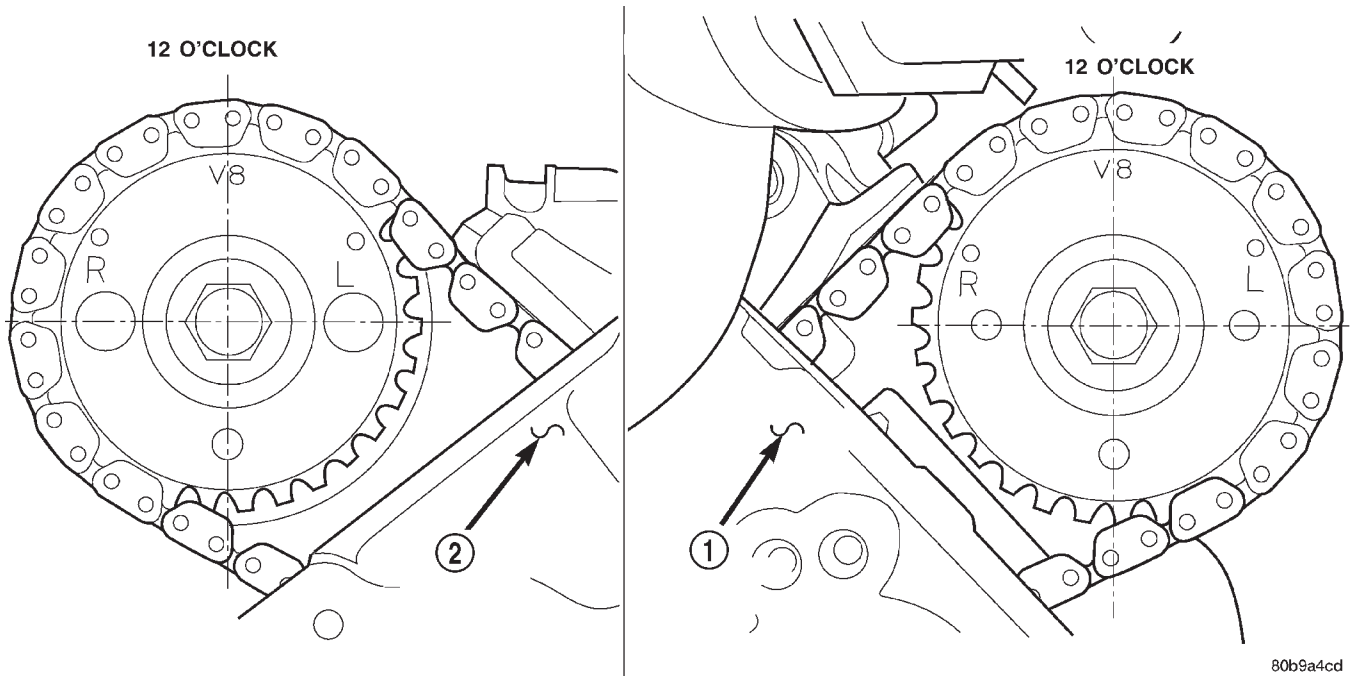

Fig. 121 Camshaft Sprocket V8 Marks

1 - LEFT CYLINDER HEAD
2 - RIGHT CYLINDER HEAD

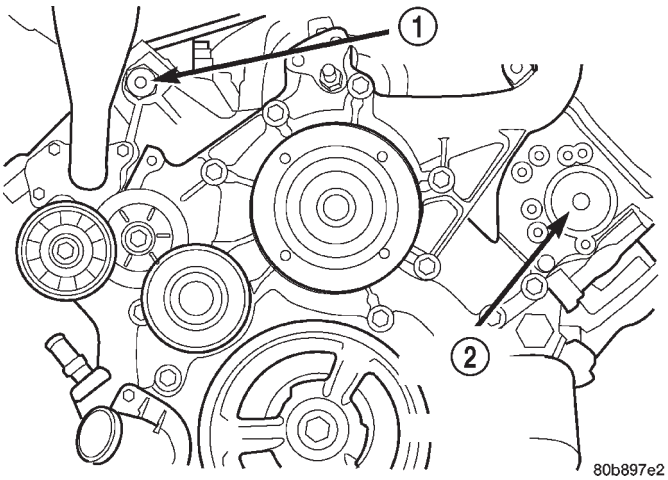

Fig. 122 Cylinder Head Access Plug Location

1 - RIGHT CYLINDER HEAD ACCESS PLUG
2 - LEFT CYLINDER HEAD ACCESS PLUG

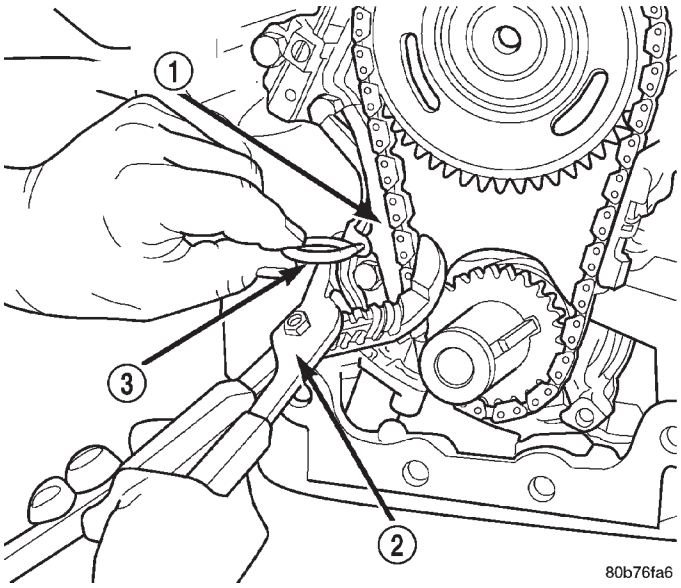

Fig. 123 Collapsing And Pinning Primary Chain Tensioner

1 - PRIMARY CHAIN TENSIONER
2 - ADJUSTABLE PLIERS
3 - SPECIAL TOOL 8514

INSTALLATION

(1) Using a vise, lightly compress the secondary chain tensioner piston until the piston step is flush with the tensioner body. Using a pin or suitable tool, release ratchet pawl by pulling pawl back against spring force through access hole on side of tensioner. While continuing to hold pawl back, Push ratchet device to approximately 2 mm from the tensioner body. Install Special Tool 8514 lock pin into hole on front of tensioner. Slowly open vise to transfer piston spring force to lock pin (Fig. 128).

TIMING BELT/CHAIN AND SPROCKETS (Continued)

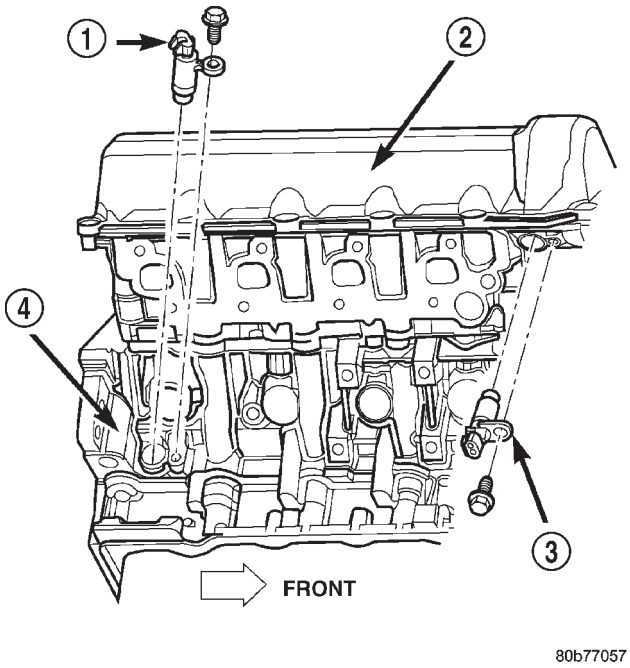

Fig. 124 Camshaft Position Sensor—Removal

1 - CRANKSHAFT POSITION SENSOR
2 - CYLINDER HEAD COVER
3 - CAMSHAFT POSITION SENSOR
4 - RIGHT SIDE CYLINDER BLOCK

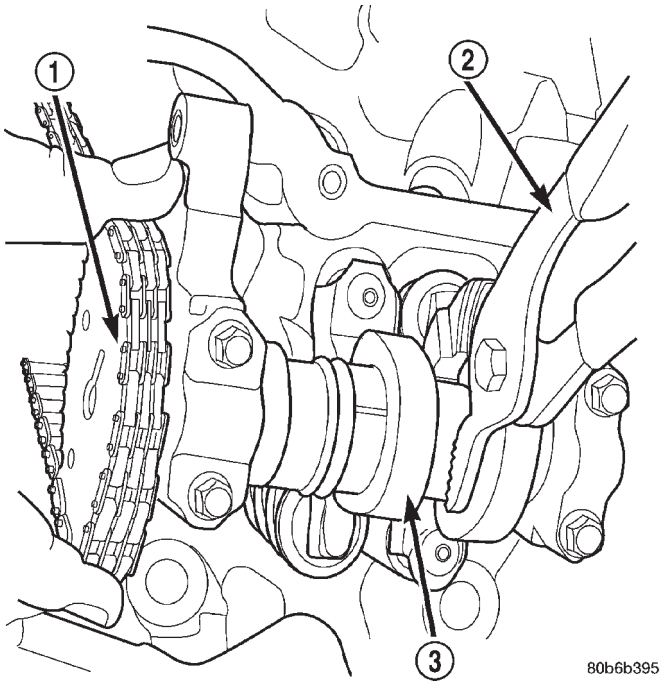

Fig. 125 Camshaft Rotation—Left Side

1 - CAMSHAFT SPROCKET AND CHAIN
2 - ADJUSTABLE PLIERS
3 - CAMSHAFT

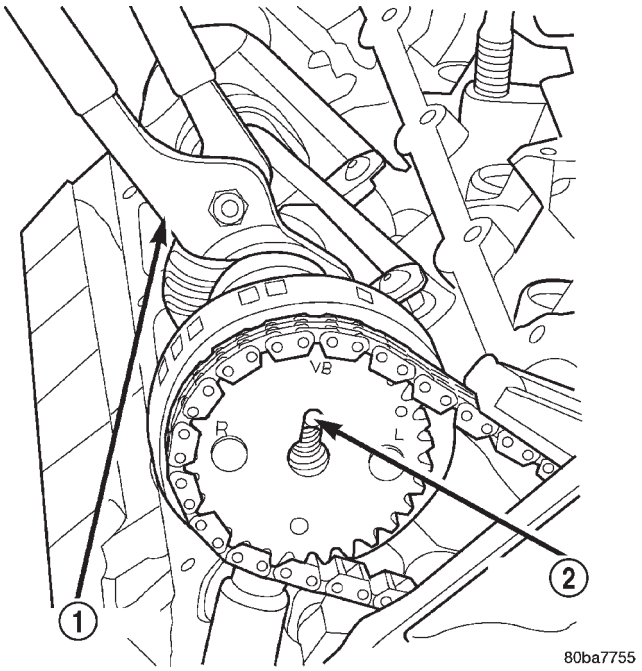

Fig. 126 Camshaft Rotation—Right Side

1 - ADJUSTABLE PLIERS
2 - CAMSHAFT DOWEL

(2) Position primary chain tensioner over oil pump and insert bolts into lower two holes on tensioner bracket. Tighten bolts to 28 N·m (250 in. lbs.).

CAUTION: Overtightening the tensioner arm torx® bolt can cause severe damage to the cylinder head. Tighten torx® bolt to specified torque only.

(3) Install right side chain tensioner arm. Apply Mopar® Lock N, Seal to torx® bolt, tighten bolt to 17 N·m (150 in. lbs.).

NOTE: The silver bolts retain the guides to the cylinder heads and the black bolts retain the guides to the engine block.

(4) Install the left side chain guide. Tighten the bolts to 28 N·m (250 in. lbs.).

CAUTION: Overtightening the tensioner arm torx® bolt can cause severe damage to the cylinder head. Tighten torx® bolt to specified torque only.

(5) Install left side chain tensioner arm. Apply Mopar® Lock N, Seal to torx® bolt, tighten bolt to 17 N·m (150 in. lbs.).

(6) Install the right side chain guide. Tighten the bolts to 28 N·m (250 in. lbs.).

(7) Install both secondary chains onto the idler sprocket. Align two plated links on the secondary chains to be visible through the two lower openings

TIMING BELT/CHAIN AND SPROCKETS (Continued)

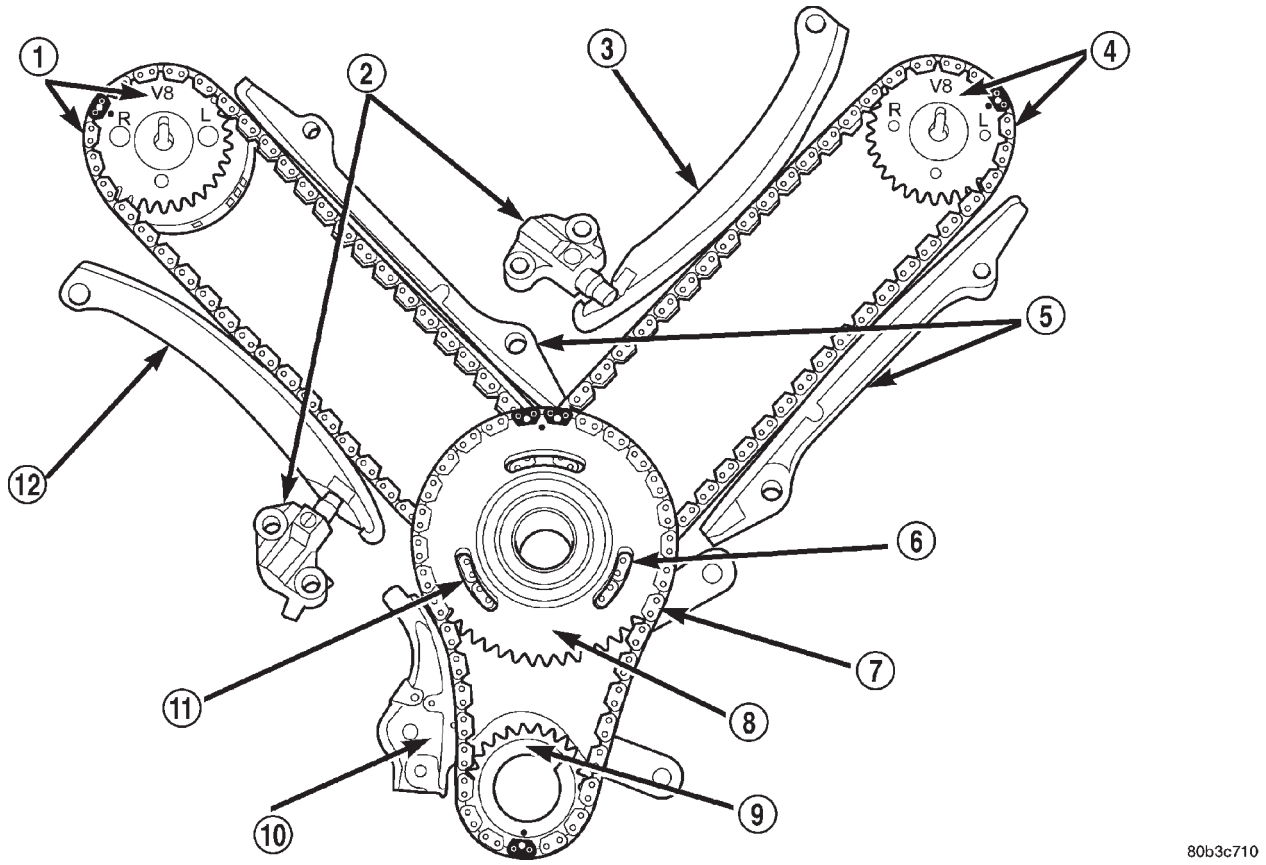

Fig. 127 Timing Chain System

1 - RIGHT CAMSHAFT SPROCKET AND SECONDARY CHAIN
2 - SECONDARY TIMING CHAIN TENSIONER (LEFT AND RIGHT SIDE NOT COMMON)
3 - SECONDARY TENSIONER ARM
4 - LEFT CAMSHAFT SPROCKET AND SECONDARY CHAIN
5 - CHAIN GUIDE
6 - TWO PLATED LINKS ON RIGHT CAMSHAFT CHAIN
7 - PRIMARY CHAIN
8 - IDLER SPROCKET
9 - CRANKSHAFT SPROCKET
10 - PRIMARY CHAIN TENSIONER
11 - TWO PLATED LINKS ON LEFT CAMSHAFT CHAIN
12 - SECONDARY TENSIONER ARM

on the idler sprocket (4 o'clock and 8 o'clock). Once the secondary timing chains are installed, position special tool 8515 to hold chains in place for installation (Fig. 129).

(8) Align primary chain double plated links with the timing mark at 12 o'clock on the idler sprocket. Align the primary chain single plated link with the timing mark at 6 o'clock on the crankshaft sprocket (Fig. 127).

(9) Lubricate idler shaft and bushings with clean engine oil.

(10) Install all chains, crankshaft sprocket, and idler sprocket as an assembly (Fig. 130). After guiding both secondary chains through the block and cylinder head openings, affix chains with a elastic strap or the equivalent, This will maintain tension on chains to aid in installation.

NOTE: It will be necessary to slightly rotate camshafts for sprocket installation.

(11) Align left camshaft sprocket "L" dot to plated link on chain.

(12) Align right camshaft sprocket "R" dot to plated link on chain.

CAUTION: Remove excess oil from the camshaft sprocket bolt. Failure to do so can result in overtorque of bolt resulting in bolt failure.

(13) Remove Special Tool 8515, then attach both sprockets to camshafts. Remove excess oil from bolts, then Install sprocket bolts, but do not tighten at this time.

(14) Verify that all plated links are aligned with the marks on all sprockets and the "V8" marks on

TIMING BELT/CHAIN AND SPROCKETS (Continued)

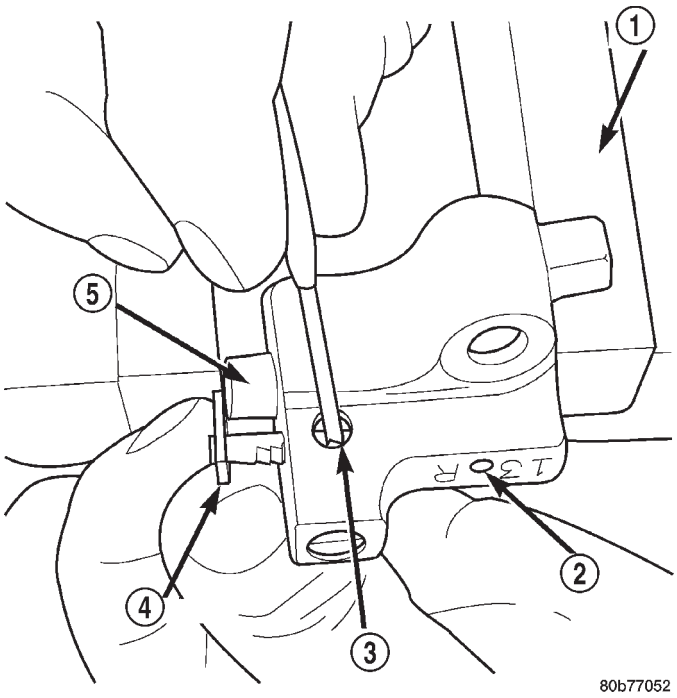

Fig. 128 Resetting Secondary Chain Tensioners

1 - VISE
2 - INSERT LOCK PIN
3 - RATCHET PAWL
4 - RATCHET
5 - PISTON

camshaft sprockets are at the 12 o'clock position (Fig. 127).

CAUTION: Ensure the plate between the left secondary chain tensioner and block is correctly installed.

(15) Install both secondary chain tensioners. Tighten bolts to 28 N·m (250 in. lbs.).

NOTE: Left and right secondary chain tensioners are not common.

(16) Before installing idler sprocket bolt, lubricate washer with oil, and tighten idler sprocket assembly retaining bolt to 34 N·m (25 ft. lbs.).

(17) Remove all locking pins (3) from tensioners.

CAUTION: After pulling locking pins out of each tensioner, DO NOT manually extend the tensioner(s) ratchet. Doing so will over tension the chains, resulting in noise and/or high timing chain loads.

(18) Using Special Tool 6958, Spanner with Adaptor Pins 8346, tighten left (Fig. 131) and right (Fig. 132). camshaft sprocket bolts to 122 N·m (90 ft. lbs.).

(19) Rotate engine two full revolutions. Verify timing marks are at the follow locations:

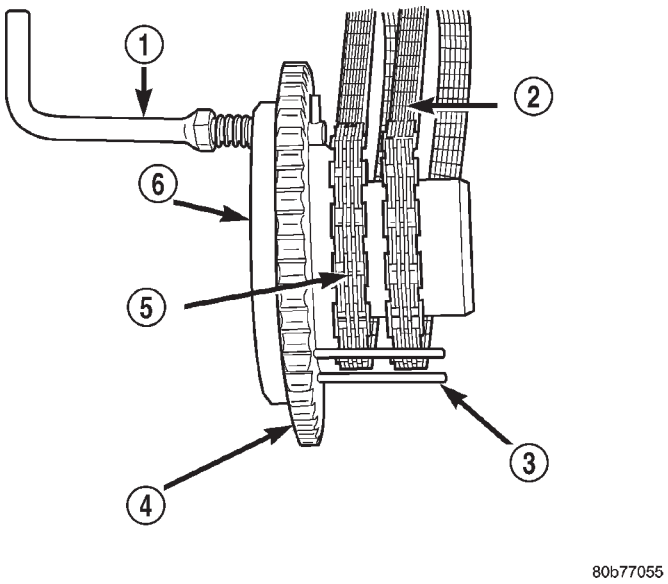

Fig. 129 Installing Secondary Timing Chains on Idler Sprocket

1 - LOCK ARM
2 - RIGHT CAMSHAFT CHAIN
3 - SECONDARY CHAINS RETAINING PINS (4)
4 - IDLER SPROCKET
5 - LEFT CAMSHAFT CHAIN
6 - SPECIAL TOOL 8515

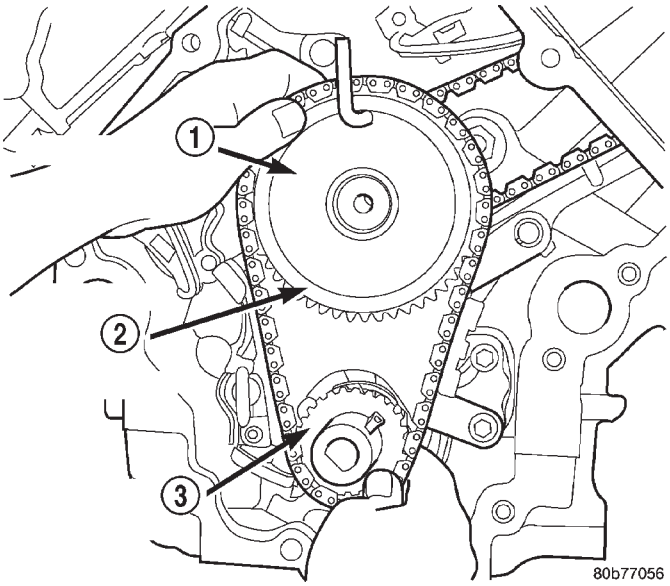

Fig. 130 Installing Idler Gear, Primary and Secondary Timing Chains

1 - SPECIAL TOOL 8515
2 - PRIMARY CHAIN IDLER SPROCKET
3 - CRANKSHAFT SPROCKET

- primary chain idler sprocket dot is at 12 o'clock (Fig. 127)

TIMING BELT/CHAIN AND SPROCKETS (Continued)

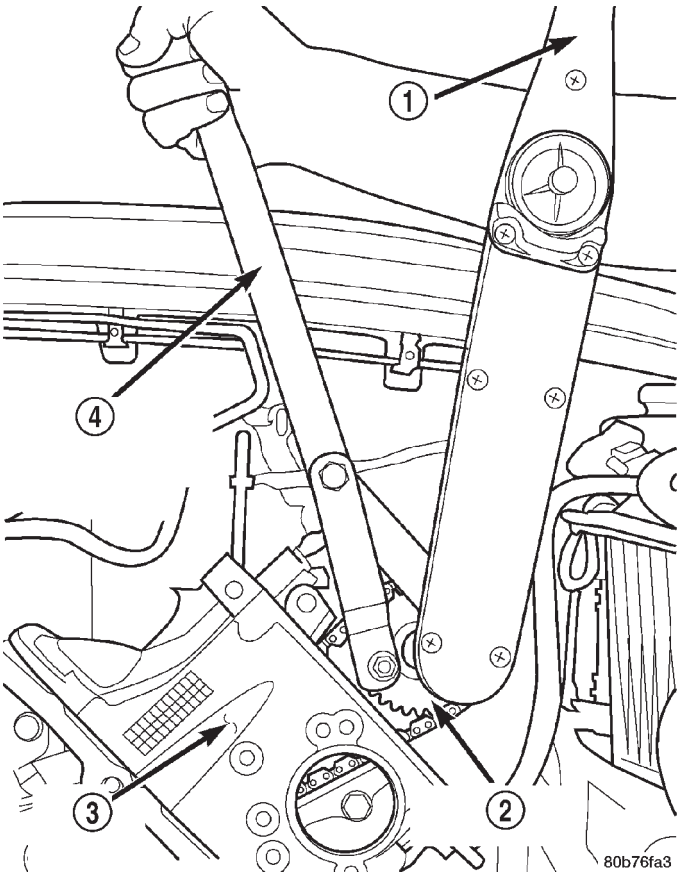

Fig. 131 Tightening Left Side Camshaft Sprocket Bolt

1 - TORQUE WRENCH
2 - CAMSHAFT SPROCKET
3 - LEFT CYLINDER HEAD
4 - SPECIAL TOOL 6958 SPANNER WITH ADAPTER PINS 8346

- primary chain crankshaft sprocket dot is at 6 o'clock (Fig. 127)
- secondary chain camshaft sprockets “V8” marks are at 12 o'clock (Fig. 127)

(20) Lubricate all three chains with engine oil.

(21) After installing all chains, it is recommended that the idler gear end play be checked (Fig. 133). The end play must be within 0.10–0.25 mm (0.004–0.010 in.). If not within specification, the idler gear must be replaced.

(22) Install timing chain cover (Refer to 9 - ENGINE/VALVE TIMING/TIMING BELT / CHAIN COVER(S) - INSTALLATION) and crankshaft damper (Refer to 9 - ENGINE/ENGINE BLOCK/VIBRATION DAMPER - INSTALLATION).

(23) Install cylinder head covers (Refer to 9 - ENGINE/CYLINDER HEAD/CYLINDER HEAD COVER(S) - INSTALLATION).

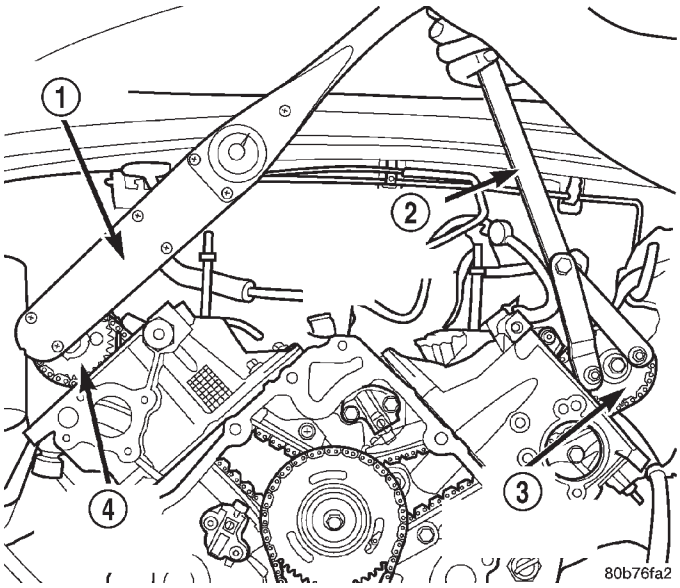

Fig. 132 Tightening Right Side Camshaft Sprocket Bolt

1 - TORQUE WRENCH
2 - SPECIAL TOOL 6958 WITH ADAPTER PINS 8346
3 - LEFT CAMSHAFT SPROCKET
4 - RIGHT CAMSHAFT SPROCKET

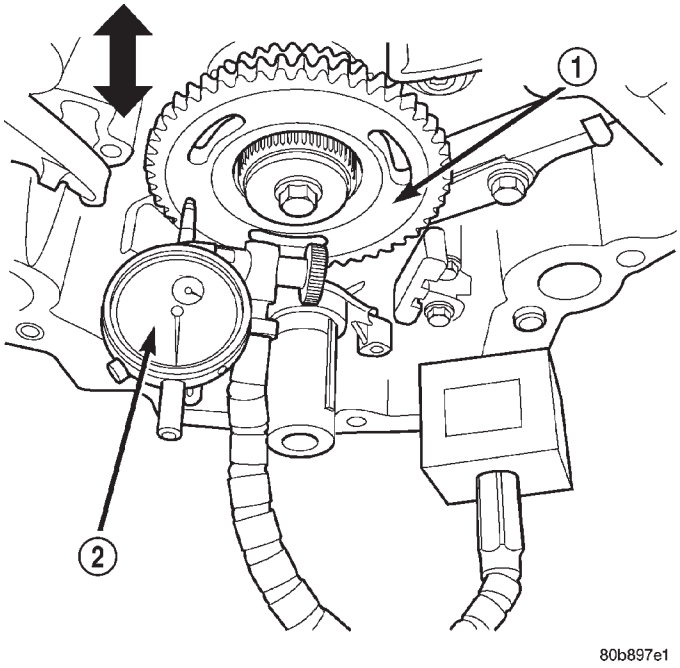

Fig. 133 Measuring Idler Gear End Play

1 - IDLER SPROCKET ASSEMBLY
2 - DIAL INDICATOR

NOTE: Before installing threaded plug in right cylinder head, the plug must be coated with sealant to prevent leaks.

TIMING BELT/CHAIN AND SPROCKETS (Continued)

(24) Coat the large threaded access plug with **Mopar® Thread Sealant with Teflon**, then install into the right cylinder head and tighten to 81 N·m (60 ft. lbs.) (Fig. 122).

(25) Install the oil fill housing.

(26) Install access plug in left cylinder head (Fig. 122).

(27) Install power steering pump.

(28) Install radiator fan (Refer to 7 - COOLING/ENGINE/RADIATOR FAN - INSTALLATION).

(29) Fill cooling system (Refer to 7 - COOLING - STANDARD PROCEDURE).

(30) Connect negative cable to battery.

EXHAUST SYSTEM

TABLE OF CONTENTS

	page
EXHAUST SYSTEM	
DESCRIPTION	1
DIAGNOSIS AND TESTING	3
EXHAUST SYSTEM	3
SPECIFICATIONS	3
CATALYTIC CONVERTER - 4.0L	
DESCRIPTION	4
REMOVAL	5
INSPECTION	5
INSTALLATION	5
CATALYTIC CONVERTER - 4.7L	
DESCRIPTION	6
REMOVAL	6
INSPECTION	7
INSTALLATION	7
EXHAUST PIPE - 4.0L	
REMOVAL	8
INSPECTION	8
INSTALLATION	9
EXHAUST PIPE - 4.7L	
REMOVAL	10
INSPECTION	10
INSTALLATION	11
HEAT SHIELDS	
DESCRIPTION	11
MUFFLER	
DESCRIPTION	12
REMOVAL	12
INSTALLATION	13
TAILPIPE	
DESCRIPTION	13
OPERATION	13

EXHAUST SYSTEM

DESCRIPTION - EXHAUST SYSTEM 4.0L ENGINE

WARNING: THE NORMAL OPERATING TEMPERATURE OF THE EXHAUST SYSTEM IS VERY HIGH. THEREFORE, NEVER WORK AROUND OR ATTEMPT TO SERVICE ANY PART OF THE EXHAUST SYSTEM UNTIL IT IS COOLED. SPECIAL CARE SHOULD BE TAKEN WHEN WORKING NEAR THE CATALYTIC CONVERTER. THE TEMPERATURE OF THE CONVERTER RISES TO A HIGH LEVEL AFTER A SHORT PERIOD OF ENGINE OPERATION TIME.

CAUTION: Avoid application of rust prevention compounds or undercoating materials to exhaust system floor pan heat shields. Light overspray near the edges is permitted. Application of coating will result in excessive floor pan temperatures and objectionable fumes.

The exhaust system uses a single muffler with a welded tailpipe.

The 50 State Emissions vehicles use two mini catalytic converters inline with the exhaust pipe below the exhaust manifolds.

The exhaust manifolds are equipped with ball flange outlets to assure a tight seal and strain free connections.

The exhaust system must be properly aligned to prevent stress, leakage and body contact. If the system contacts any body panel, it may amplify objectionable noises originating from the engine or body.

When inspecting an exhaust system, critically inspect for cracked or loose joints, stripped screw or bolt threads, corrosion damage and worn, cracked or broken hangers. Replace all components that are badly corroded or damaged. DO NOT attempt to repair.

When replacement is required, use original equipment parts (or their equivalent). This will assure proper alignment and provide acceptable exhaust noise levels.

The basic exhaust system consists of exhaust manifold(s), exhaust pipe with oxygen sensors, catalytic converter(s), heat shield(s), muffler and tailpipe (Fig. 1) and (Fig. 2)

EXHAUST SYSTEM (Continued)

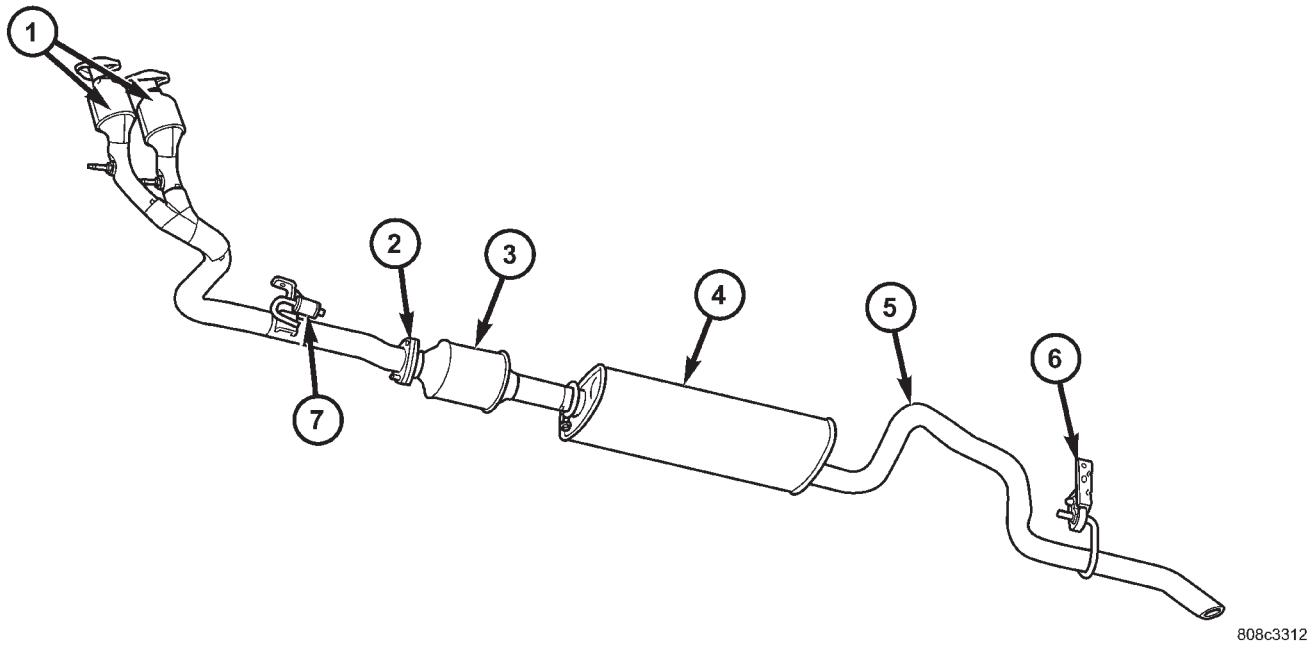

Fig. 1 Exhaust System—4.0L

1 - MINI CONVERTERS (2)
2 - CATALYTIC CONVERTER TO EXHAUST PIPE FLANGE JOINT
3 - CATALYTIC CONVERTER
4 - MUFFLER
5 - TAILPIPE
6 - TAILPIPE HANGER REAR MOUNT INSULATOR
7 - EXHAUST PIPE HANGER AND MOUNT INSULATOR

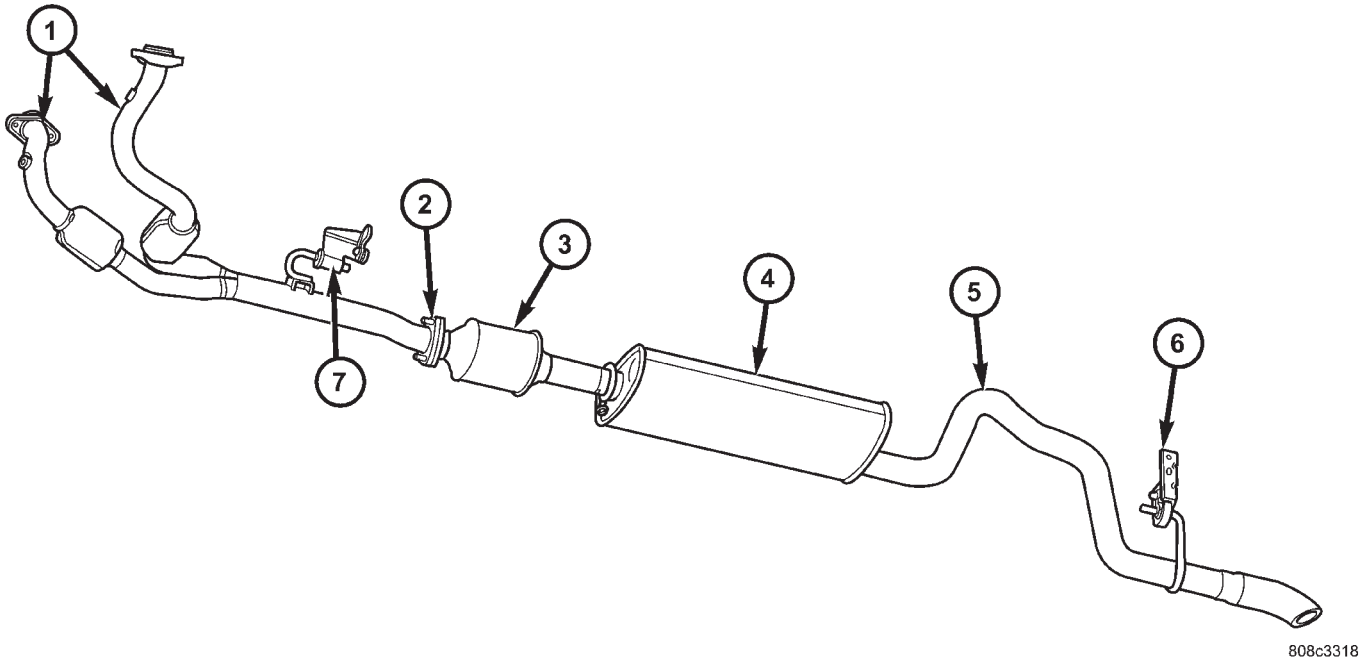

Fig. 2 Exhaust System—4.7L

1 - EXHAUST PIPE WITH CATALYTIC CONVERTERS
2 - EXHAUST PIPE TO CATALYTIC CONVERTER FLANGE JOINT
3 - CATALYTIC CONVERTER
4 - MUFFLER
5 - TAILPIPE
6 - TAILPIPE HANGER REAR MOUNT INSULATOR
7 - EXHAUST PIPE HANGER AND MOUNT INSULATOR

EXHAUST SYSTEM (Continued)

DIAGNOSIS AND TESTING—EXHAUST SYSTEM

EXHAUST SYSTEM DIAGNOSIS CHART

CONDITION	POSSIBLE CAUSE	CORRECTION
EXCESSIVE EXHAUST NOISE	1. Leaks at pipe joints.	1. Tighten clamps to specified torque at leaking joints (Refer to 11 - EXHAUST SYSTEM - SPECIFICATIONS).
	2. Burned or blown out muffler.	2. Replace muffler assembly (Refer to 11 - EXHAUST SYSTEM/MUFFLER - REMOVAL). Check exhaust system.
	3. Burned or rusted-out exhaust pipe.	3. Replace exhaust pipe (Refer to 11 - EXHAUST SYSTEM/EXHAUST PIPE - REMOVAL).
	4. Exhaust pipe leaking at manifold flange.	4. Tighten connection attaching nuts (Refer to 11 - EXHAUST SYSTEM - SPECIFICATIONS).
	5. Exhaust manifold cracked or broken.	5. Replace exhaust manifold (Refer to 9 - ENGINE/MANIFOLDS/EXHAUST MANIFOLD - REMOVAL).
	6. Leak between exhaust manifold and cylinder head.	6. Tighten exhaust manifold to cylinder head stud nuts or bolts (Refer to 9 - ENGINE - SPECIFICATIONS).
	7. Restriction in muffler or tailpipe.	7. Remove restriction, if possible. Replace muffler or tailpipe, as necessary.
	8. Exhaust system contacting body or chassis.	8. Re-align exhaust system to clear surrounding components.
LEAKING EXHAUST GASES	1. Leaks at pipe joints.	1. Tighten/replace clamps at leaking joints (Refer to 11 - EXHAUST SYSTEM - SPECIFICATIONS).

SPECIFICATIONS

TORQUE

DESCRIPTION	N·m	Ft. Lbs.	In. Lbs.
Catalytic Converter-to-Exhaust Pipe—Nuts	28	250	—
Exhaust Pipe-to-Manifold—Nuts	31	23	—
Heat Shield Retaining—Nuts	2.0	—	20
Muffler-to-Catalytic Converter U-bolt clamp	47	35	—
Rear Tailpipe Hanger—Bolts	22	—	192

CATALYTIC CONVERTER - 4.0L

DESCRIPTION - CATALYTIC CONVERTER 4.0L ENGINE

WARNING: THE NORMAL OPERATING TEMPERATURE OF THE EXHAUST SYSTEM IS VERY HIGH. THEREFORE, NEVER WORK AROUND OR ATTEMPT TO SERVICE ANY PART OF THE EXHAUST SYSTEM UNTIL IT IS COOLED. SPECIAL CARE SHOULD BE TAKEN WHEN WORKING NEAR THE CATALYTIC CONVERTER. THE TEMPERATURE OF THE CONVERTER RISES TO A HIGH LEVEL AFTER A SHORT PERIOD OF ENGINE OPERATION TIME.

CAUTION: DO NOT remove spark plug wires from plugs or by any other means short out cylinders. Failure of the catalytic converter can occur due to a temperature increase caused by unburned fuel passing through the converter.

The stainless steel catalytic converter body is designed to last the life of the vehicle. Excessive heat can result in bulging or other distortion, but excessive heat will not be the fault of the converter. If unburned fuel enters the converter, overheating may occur. If a converter is heat-damaged, correct the cause of the damage at the same time the converter is replaced. Also, inspect all other components of the exhaust system for heat damage.

Unleaded gasoline must be used to avoid contaminating the catalyst core.

50 State emission vehicles incorporate two mini catalytic converters located after the exhaust manifolds and before the inline catalytic converter (Fig. 3).

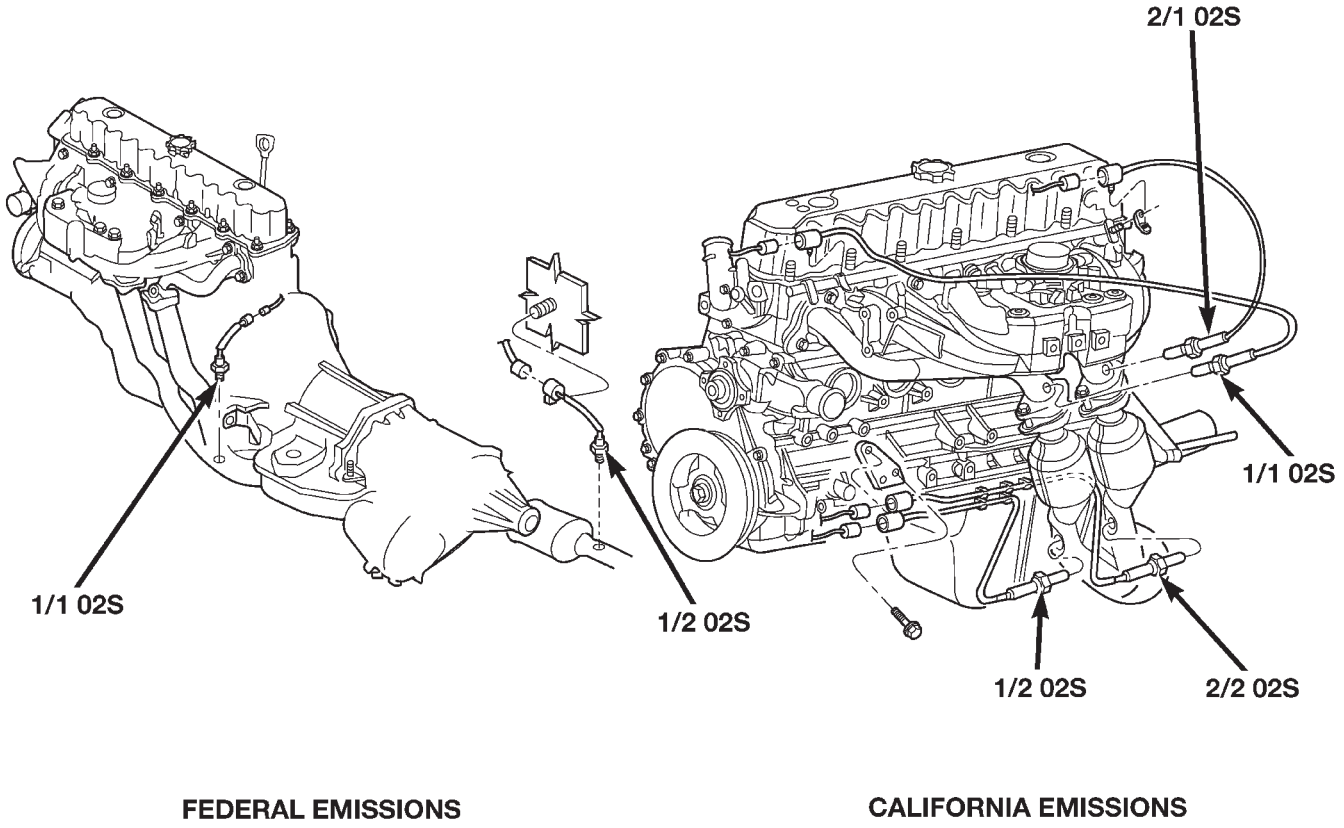

Fig. 3 4.0L Catalytic Converter and O2 Sensor Configuration - 50 State Emissions

CATALYTIC CONVERTER - 4.0L (Continued)

REMOVAL

WARNING: IF TORCHES ARE USED WHEN WORKING ON THE EXHAUST SYSTEM, DO NOT ALLOW THE FLAME NEAR THE FUEL LINES.

(1) Raise and support the vehicle.
(2) Saturate the bolts and nuts with heat valve lubricant. Allow 5 minutes for penetration.
(3) Remove nuts from the catalytic converter and exhaust pipe flange connection (Fig. 4).
(4) Loosen exhaust clamp from the catalytic converter and muffler connection (Fig. 4).
(5) Disconnect oxygen sensor wiring (Fig. 4).

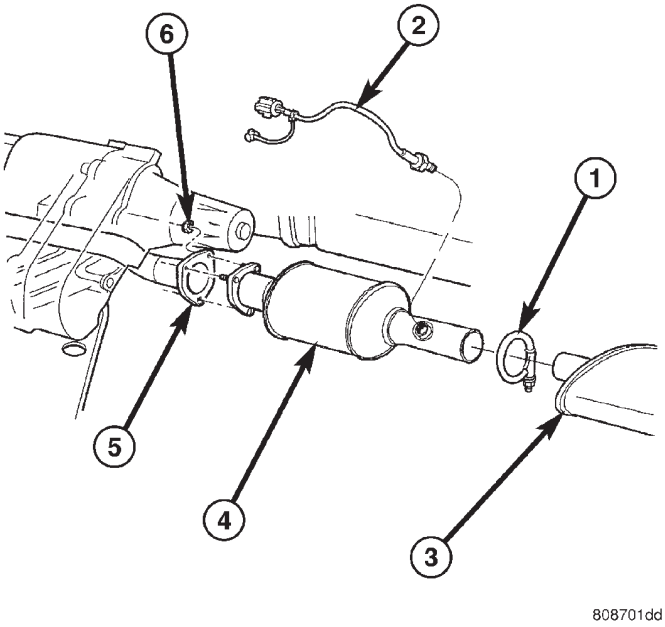

Fig. 4 Exhaust Pipe-to-Catalytic Converter-to-Muffler Connection

1 - EXHAUST CLAMP ASSEMBLY
2 - OXYGEN SENSOR
3 - MUFFLER
4 - CATALYTIC CONVERTER
5 - EXHAUST PIPE WITH FLANGE JOINT
6 - NUTS (3)

(6) Heat the catalytic converter to muffler connection with a torch until the metal becomes cherry red.
(7) While the metal is still cherry red, twist the catalytic converter back and forth to separate it from the exhaust pipe and the muffler (Fig. 5).

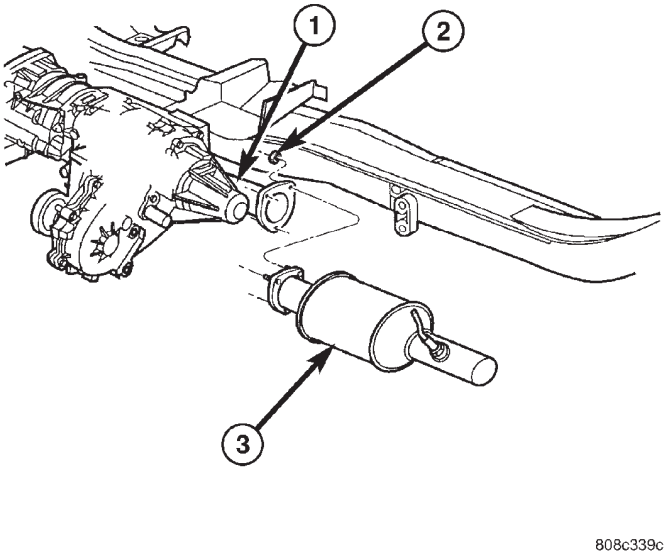

Fig. 5 Catalytic Converter—Removal

1 - EXHAUST PIPE WITH FLANGE
2 - NUTS (3)
3 - CATALYTIC CONVERTER

INSPECTION

Look at the stainless steel body of the converter, inspect for bulging or other distortion that could be a result of overheating. If the converter has a heat shield attached make sure it is not bent or loose.

If you suspect internal damage to the catalyst, tapping the bottom of the catalyst with a rubber mallet may indicate a damaged core.

INSTALLATION

(1) Position the catalytic converter onto the exhaust pipe flange connection (Fig. 4). Tighten the nuts to 28 N·m (250 in. lbs.) torque.
(2) Install the muffler onto the catalytic converter until the alignment tab is inserted into the alignment slot.
(3) Install the exhaust clamp at the muffler and catalytic converter connection (Fig. 4). Tighten the clamp nuts to 47 N·m (35 ft. lbs.) torque.
(4) Connect oxygen sensor wiring (Fig. 4).
(5) Lower the vehicle.
(6) Start the engine and inspect for exhaust leaks and exhaust system contact with the body panels. Adjust the alignment, if needed.

CATALYTIC CONVERTER - 4.7L

DESCRIPTION - CATALYTIC CONVERTER

WARNING: THE NORMAL OPERATING TEMPERATURE OF THE EXHAUST SYSTEM IS VERY HIGH. THEREFORE, NEVER WORK AROUND OR ATTEMPT TO SERVICE ANY PART OF THE EXHAUST SYSTEM UNTIL IT IS COOLED. SPECIAL CARE SHOULD BE TAKEN WHEN WORKING NEAR THE CATALYTIC CONVERTER. THE TEMPERATURE OF THE CONVERTER RISES TO A HIGH LEVEL AFTER A SHORT PERIOD OF ENGINE OPERATION TIME.

CAUTION: DO NOT remove spark plug wires from plugs or by any other means short out cylinders. Failure of the catalytic converter can occur due to a temperature increase caused by unburned fuel passing through the converter.

The stainless steel catalytic converter body is designed to last the life of the vehicle. Excessive heat can result in bulging or other distortion, but excessive heat will not be the fault of the converter. If unburned fuel enters the converter, overheating may occur. If a converter is heat-damaged, correct the cause of the damage at the same time the converter is replaced. Also, inspect all other components of the exhaust system for heat damage.

Unleaded gasoline must be used to avoid contaminating the catalyst core.

50 State emission vehicles incorporate two mini catalytic converters located after the exhaust manifolds and before the inline catalytic converter (Fig. 6).

REMOVAL

WARNING: IF TORCHES ARE USED WHEN WORKING ON THE EXHAUST SYSTEM, DO NOT ALLOW THE FLAME NEAR THE FUEL LINES.

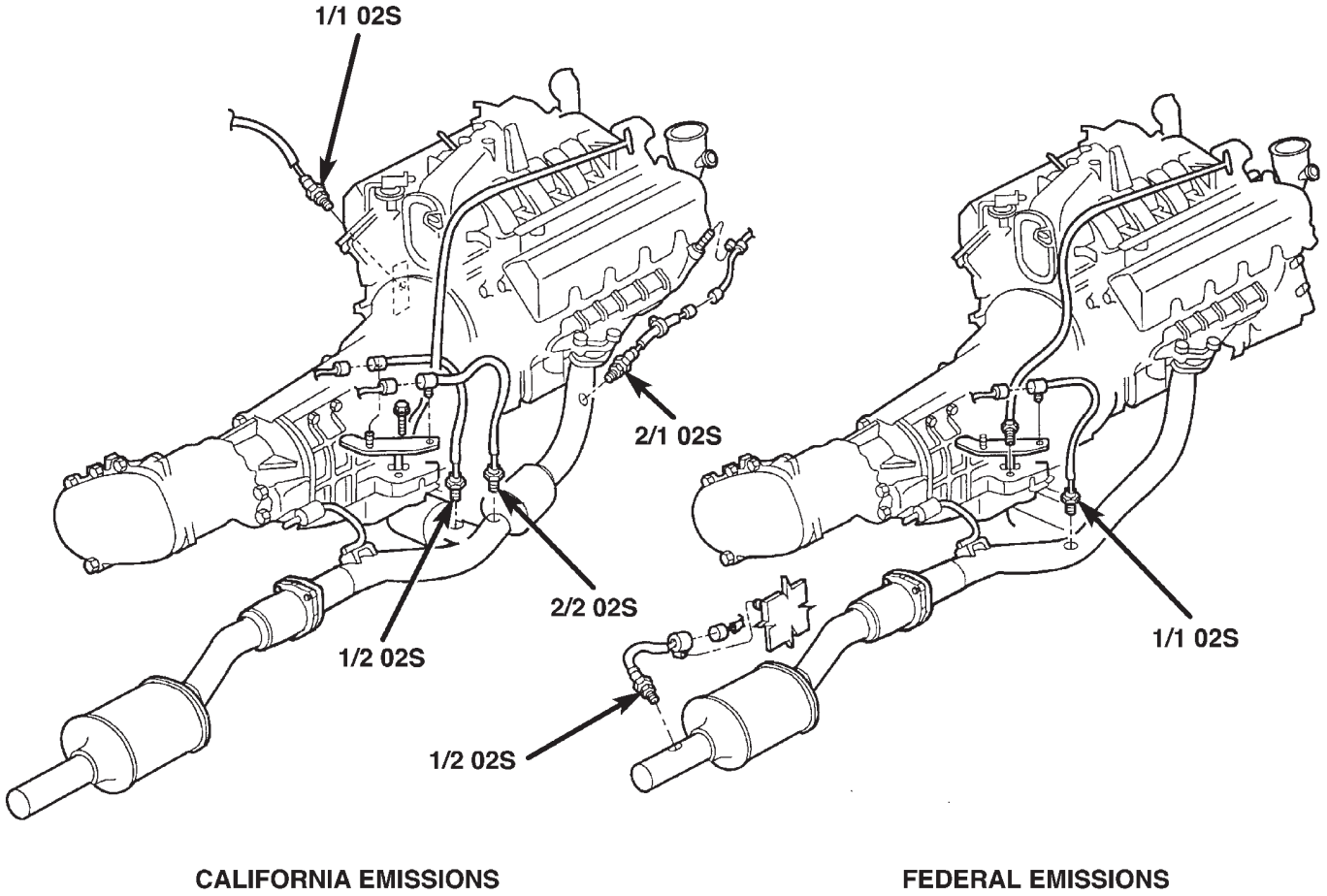

Fig. 6 4.7L Catalytic Converter and O2 Sensor Configuration - 50 State Emissions

CATALYTIC CONVERTER - 4.7L (Continued)

(1) Raise and support the vehicle.

(2) Saturate the bolts and nuts with heat valve lubricant. Allow 5 minutes for penetration.

(3) Remove nuts from the catalytic converter and exhaust pipe flange connection (Fig. 7).

(4) Loosen exhaust clamp from the catalytic converter and muffler connection (Fig. 7).

(5) Disconnect oxygen sensor wiring (Fig. 7).

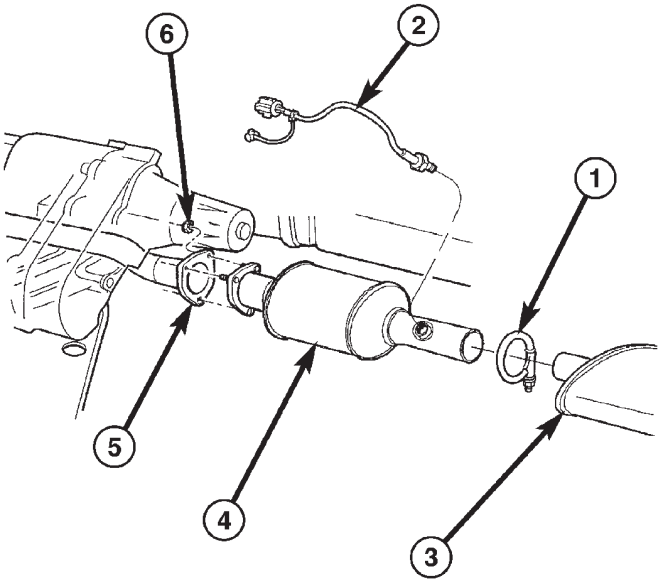

Fig. 7 Exhaust Pipe-to-Catalytic Converter-to-Muffler Connection

1 - EXHAUST CLAMP ASSEMBLY
2 - OXYGEN SENSOR
3 - MUFFLER
4 - CATALYTIC CONVERTER
5 - EXHAUST PIPE WITH FLANGE JOINT
6 - NUTS (3)

(6) Heat the catalytic converter to muffler connection with a torch until the metal becomes cherry red.

(7) While the metal is still cherry red, twist the catalytic converter back and forth to separate it from the muffler (Fig. 8).

INSPECTION

Look at the stainless steel body of the converter, inspect for bulging or other distortion that could be a result of overheating. If the converter has a heat shield attached make sure it is not bent or loose.

If you suspect internal damage to the catalyst, tapping the bottom of the catalyst with a rubber mallet may indicate a damaged core.

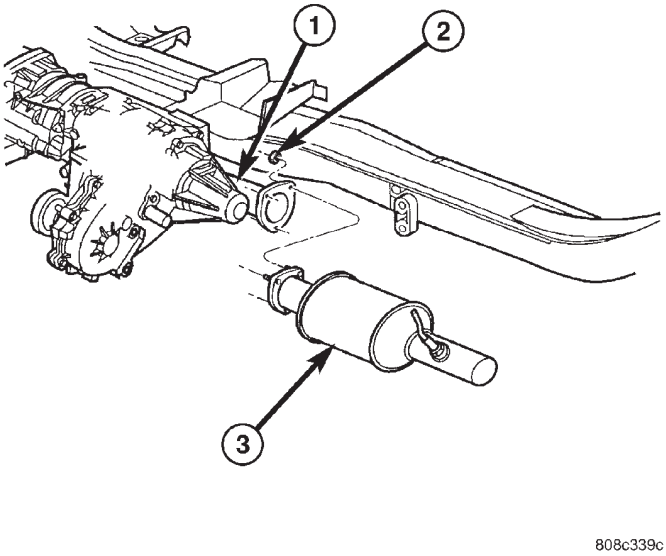

Fig. 8 Catalytic Converter—Removal

1 - EXHAUST PIPE WITH FLANGE
2 - NUTS (3)
3 - CATALYTIC CONVERTER

INSTALLATION

(1) Position the catalytic converter onto the exhaust pipe flange connection (Fig. 4). Tighten the nuts to 28 N·m (250 in. lbs.) torque.

(2) Install the muffler onto the catalytic converter until the alignment tab is inserted into the alignment slot.

(3) Install the exhaust clamp at the muffler and catalytic converter connection (Fig. 4). Tighten the clamp nuts to 47 N·m (35 ft. lbs.) torque.

(4) Connect oxygen sensor wiring (Fig. 4).

(5) Lower the vehicle.

(6) Start the engine and inspect for exhaust leaks and exhaust system contact with the body panels. Adjust the alignment, if needed.

EXHAUST PIPE - 4.0L

REMOVAL

WARNING: IF TORCHES ARE USED WHEN WORKING ON THE EXHAUST SYSTEM, DO NOT ALLOW THE FLAME NEAR THE FUEL LINES.

WARNING: THE NORMAL OPERATING TEMPERATURE OF THE EXHAUST SYSTEM IS VERY HIGH. THEREFORE, NEVER WORK AROUND OR ATTEMPT TO SERVICE ANY PART OF THE EXHAUST SYSTEM UNTIL IT IS COOLED. SPECIAL CARE SHOULD BE TAKEN WHEN WORKING NEAR THE CATALYTIC CONVERTER. THE TEMPERATURE OF THE CONVERTER RISES TO A HIGH LEVEL AFTER A SHORT PERIOD OF ENGINE OPERATION TIME.

(1) Raise and support the vehicle.

(2) Saturate the bolts and nuts with heat valve lubricant. Allow 5 minutes for penetration.

(3) Remove the oxygen sensor from the exhaust pipe (Fig. 9).

(4) Remove the nuts from the exhaust pipe to catalytic converter flange connection (Fig. 10).

(5) Disconnect the exhaust pipe from the exhaust manifold. (Fig. 11)

INSPECTION

Discard rusted clamps, broken or worn supports and attaching parts. Replace a component with original equipment parts, or equivalent. This will assure proper alignment with other parts in the system and provide acceptable exhaust noise levels.

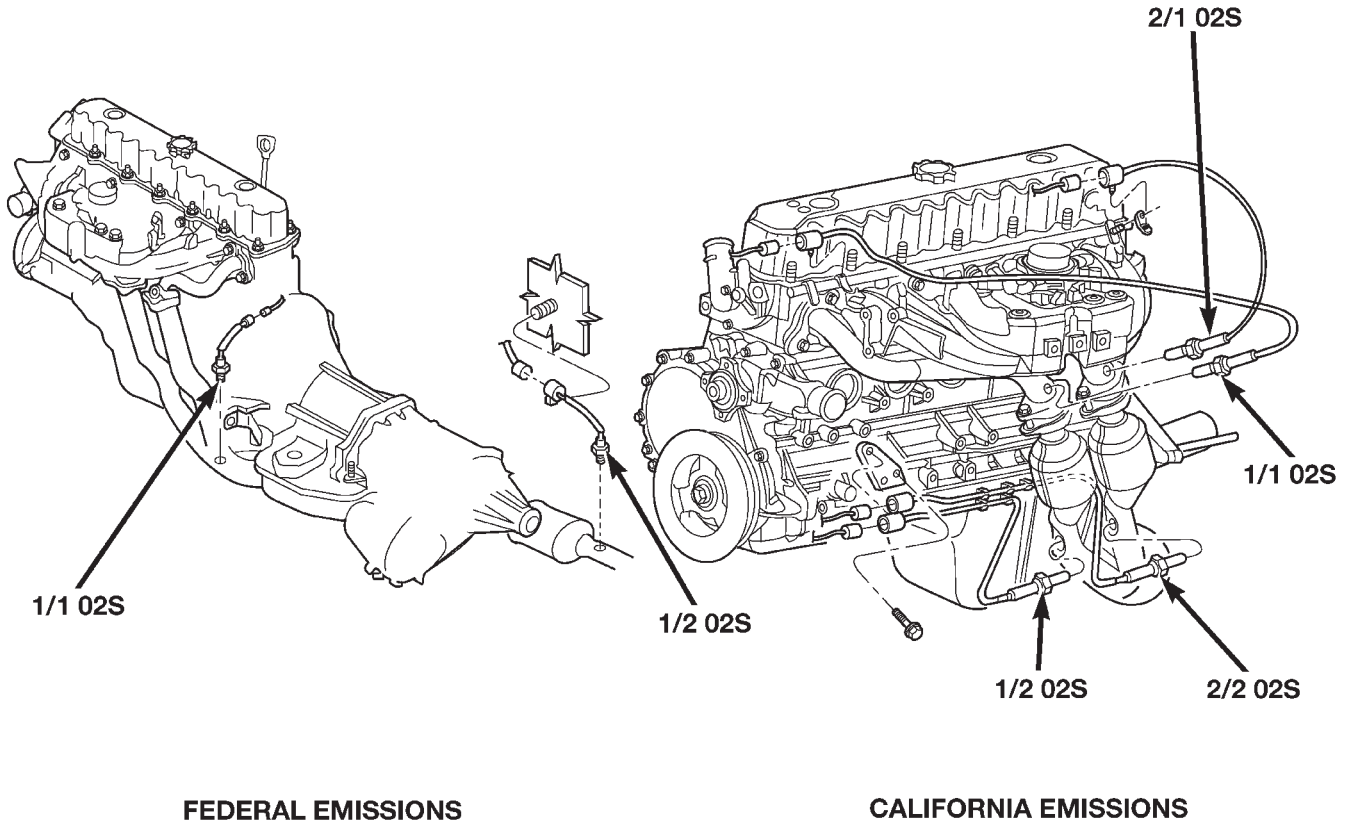

Fig. 9 O2 Sensor Location 4.0L

EXHAUST PIPE - 4.0L (Continued)

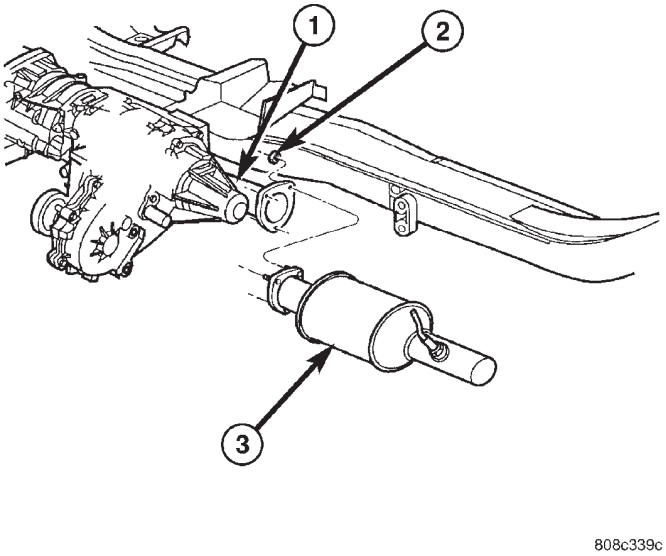

Fig. 10 Catalytic Converter—Removal

1 - EXHAUST PIPE WITH FLANGE
2 - NUTS (3)
3 - CATALYTIC CONVERTER

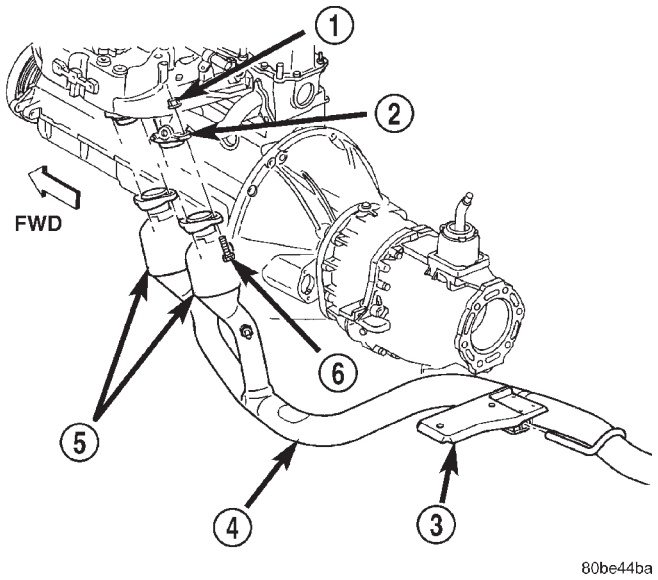

Fig. 11 Exhaust Pipe 4.0L

1 - NUT
2 - EXHAUST MANIFOLD
3 - TRANSMISSION SUPPORT
4 - EXHAUST PIPE
5 - MINI CATALYTIC CONVERTER
6 - BOLT

INSTALLATION

(1) Connect the exhaust pipe to the engine exhaust manifold. Tighten the nuts to 31 N·m (23 ft. lbs.) (Fig. 11).

NOTE: When servicing the exhaust system, replace the factory installed uni-clamp with standard u-bolt clamps.

(2) Position the catalytic converter onto the exhaust pipe flange connection. Tighten retaining nuts to 28 N·m (250 in. lbs.). (Fig. 12)

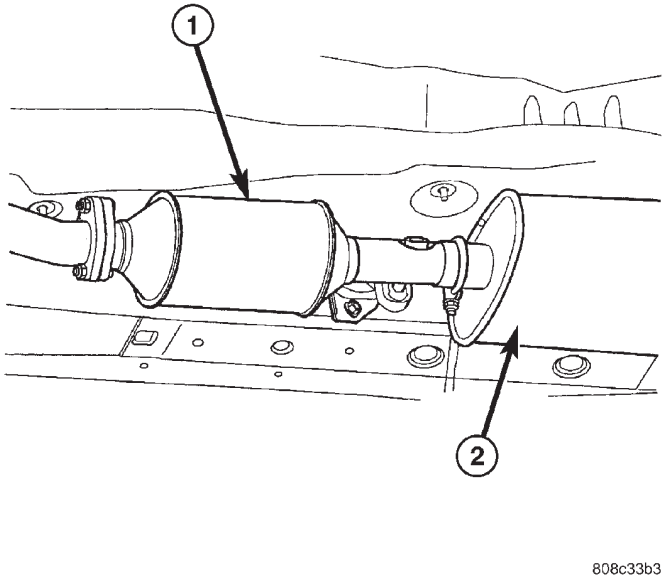

Fig. 12 Installing Exhaust Clamps

1 - CATALYTIC CONVERTER
2 - MUFFLER

(3) Coat the oxygen sensor with anti-seize compound. Install the sensor and tighten the nut to 48 N·m (35 ft. lbs.) torque (Fig. 9).

(4) Lower the vehicle.

(5) Start the engine and inspect for exhaust leaks and exhaust system contact with the body panels. Adjust the alignment, if needed.

(6) After initial start-up, check the engine exhaust manifold to exhaust pipe nuts for proper torque.

EXHAUST PIPE - 4.7L

REMOVAL

WARNING: IF TORCHES ARE USED WHEN WORKING ON THE EXHAUST SYSTEM, DO NOT ALLOW THE FLAME NEAR THE FUEL LINES.

WARNING: THE NORMAL OPERATING TEMPERATURE OF THE EXHAUST SYSTEM IS VERY HIGH. THEREFORE, NEVER WORK AROUND OR ATTEMPT TO SERVICE ANY PART OF THE EXHAUST SYSTEM UNTIL IT IS COOLED. SPECIAL CARE SHOULD BE TAKEN WHEN WORKING NEAR THE CATALYTIC CONVERTER. THE TEMPERATURE OF THE CONVERTER RISES TO A HIGH LEVEL AFTER A SHORT PERIOD OF ENGINE OPERATION TIME.

(1) Raise and support the vehicle.

(2) Saturate the bolts and nuts with heat valve lubricant. Allow 5 minutes for penetration.

(3) Remove the oxygen sensor from the exhaust pipe (Fig. 13).

(4) Remove the retaining nuts holding catalytic converter to exhaust pipe (Fig. 14).

(5) Disconnect the exhaust pipe from the exhaust manifold. (Fig. 15)

INSPECTION

Discard rusted clamps, broken or worn supports and attaching parts. Replace a component with original equipment parts, or equivalent. This will assure proper alignment with other parts in the system and provide acceptable exhaust noise levels.

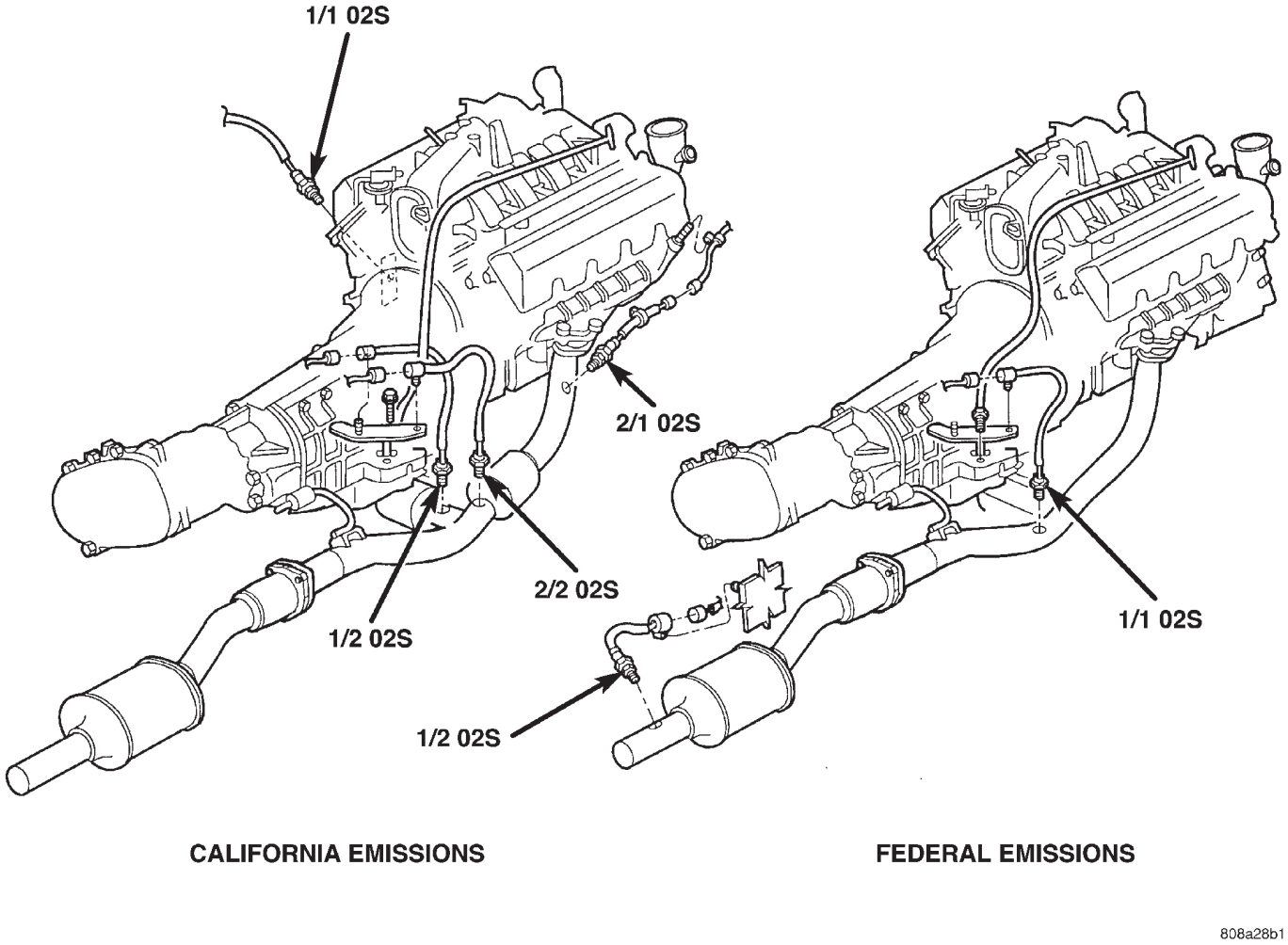

Fig. 13 4.7L Catalytic Converter and O2 Sensor Configuration - 50 State Emissions

EXHAUST PIPE - 4.7L (Continued)

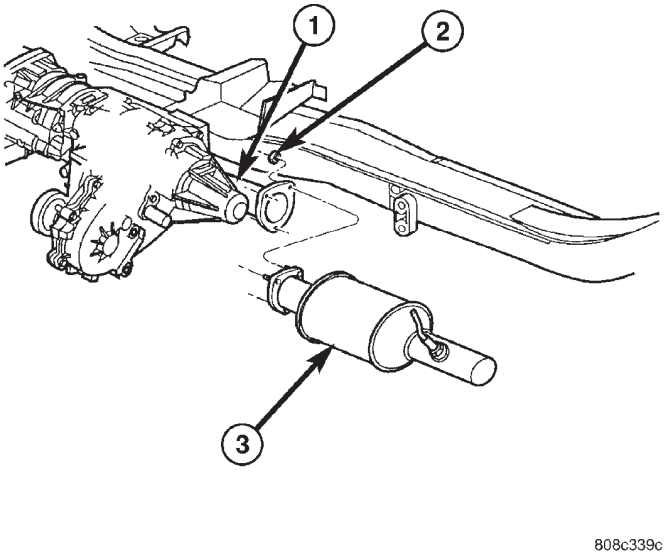

Fig. 14 Catalytic Converter—Removal

1 - EXHAUST PIPE WITH FLANGE
2 - NUTS (3)
3 - CATALYTIC CONVERTER

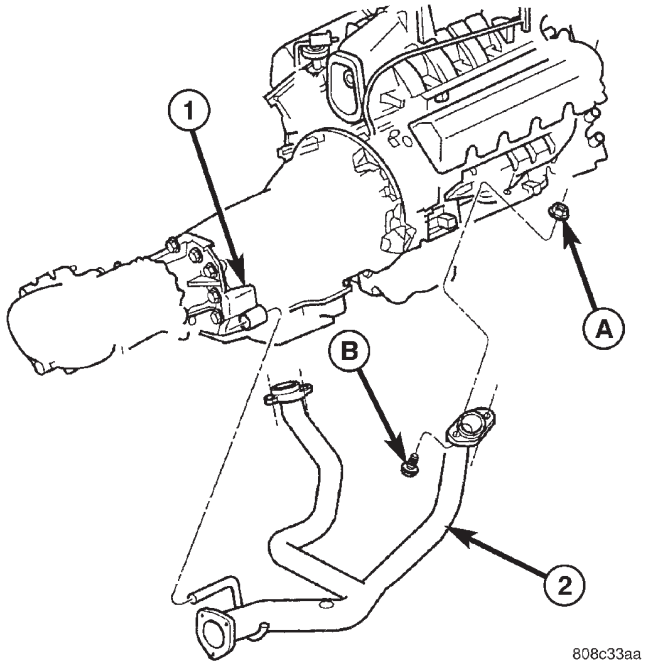

Fig. 15 Exhaust Pipe 4.7L

1 - EXHAUST PIPE HANGER
2 - NUTS (4)
3 - EXHAUST PIPE
4 - BOLTS (4)

INSTALLATION

(1) Connect the exhaust pipe to the engine exhaust manifold. Tighten the nuts to 31 N·m (23 ft. lbs.) (Fig. 15).

NOTE: When servicing the exhaust system, replace the factory installed uni-clamp with standard u-bolt clamps.

(2) Position the catalytic converter onto the exhaust pipe flange connection. Tighten retaining nuts to 28 N·m (250 in. lbs.). (Fig. 16)

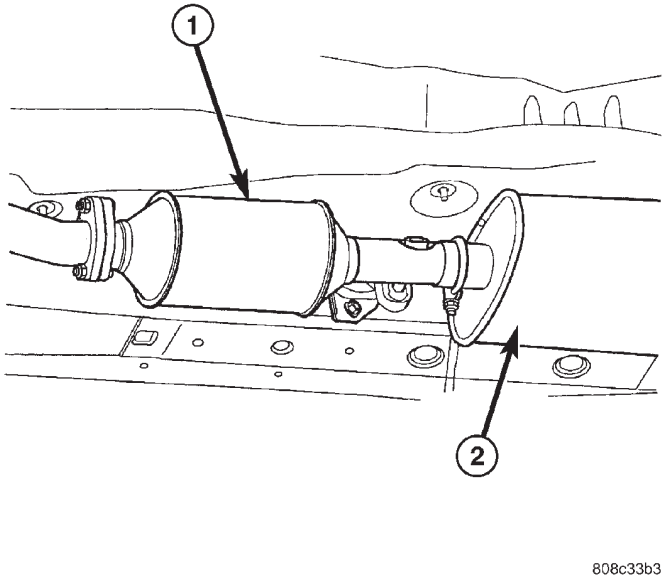

Fig. 16 Installing Exhaust Clamps

1 - CATALYTIC CONVERTER
2 - MUFFLER

(3) Coat the oxygen sensor with anti-seize compound. Install the sensor and tighten the nut to 48 N·m (35 ft. lbs.) torque (Fig. 13).

(4) Lower the vehicle.

(5) Start the engine and inspect for exhaust leaks and exhaust system contact with the body panels. Adjust the alignment, if needed.

(6) After initial start-up, check the engine exhaust manifold to exhaust pipe nuts for proper torque.

HEAT SHIELDS

DESCRIPTION

Heat shields are needed to protect both the vehicle and the environment from the high temperatures developed by the catalytic converter. The catalytic

HEAT SHIELDS (Continued)

converter releases additional heat into the exhaust system. Under severe operating conditions, the temperature increases in the area of the converter. Such conditions can exist when the engine misfires or otherwise does not operate at peak efficiency (Fig. 17).

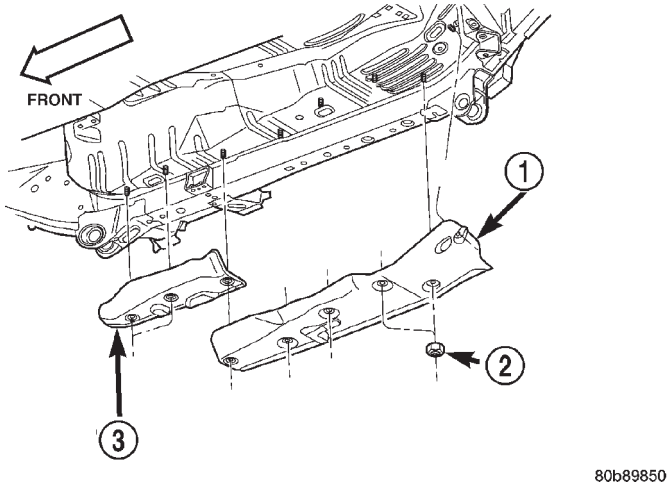

Fig. 17 Front and Rear Floor Pan Heat Shields

1 - REAR FLOOR PAN HEAT SHIELD
2 - HEAT SHIELD RETAINING NUTS (QTY 8)
3 - FRONT FLOOR PAN HEAT SHIELD

MUFFLER

DESCRIPTION

Both the 4.0L and 4.7L engines use a stainless steel muffler to control exhaust noise levels and exhaust back pressure. The muffler and tailpipe are a one piece assembly (Fig. 18).

REMOVAL

All original equipment exhaust systems are manufactured with the tailpipe welded to the muffler. Service replacement mufflers and tailpipes are either clamped together or welded together.

WARNING: IF TORCHES ARE USED WHEN WORKING ON THE EXHAUST SYSTEM, DO NOT ALLOW THE FLAME NEAR THE FUEL LINES.

(1) Raise and support the vehicle.

(2) Saturate the bolts and nuts with heat valve lubricant. Allow 5 minutes for penetration.

(3) Loosen the exhaust clamp on the catalytic converter to muffler connection (Fig. 19).

(4) Heat the catalytic converter-to-muffler connection with a torch until the metal becomes cherry red.

(5) While the metal is still cherry red, remove the tailpipe/muffler assembly from the catalytic converter.

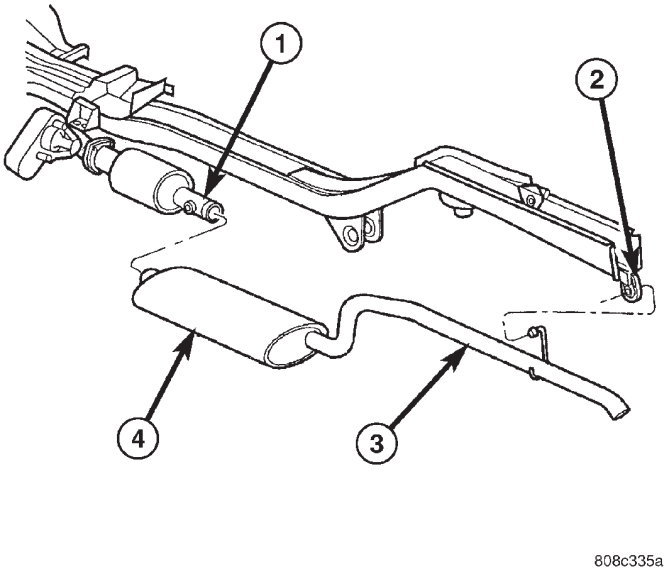

Fig. 18 Muffler and Tailpipe

1 - CATALYTIC CONVERTER
2 - TAILPIPE HANGER
3 - TAILPIPE
4 - MUFFLER

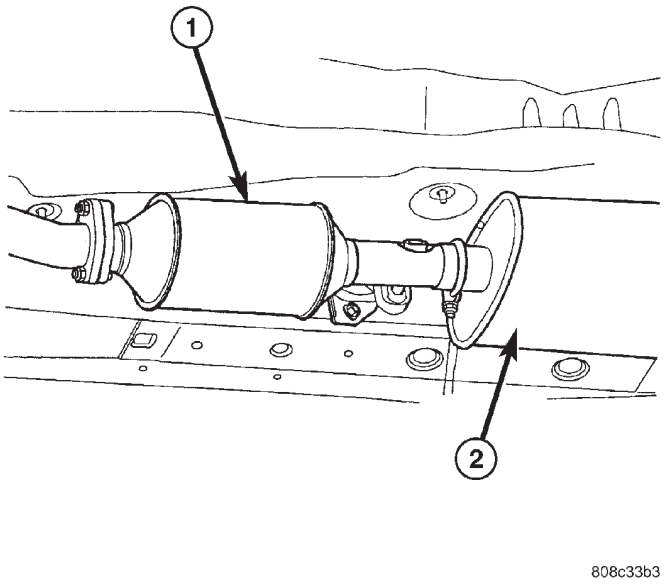

Fig. 19 Installing Exhaust Clamps

1 - CATALYTIC CONVERTER
2 - MUFFLER

MUFFLER (Continued)

(6) Remove the tailpipe from the tailpipe hanger (Fig. 20).

(7) Remove the tailpipe/muffler assembly (Fig. 20).

INSTALLATION

(1) If the tailpipe hanger assembly was removed, install the hanger to the frame. Tighten the bolts to 22 N·m (192 in. lbs.) torque.

(2) Position the tailpipe and muffler onto the tailpipe hanger (Fig. 20) .

(3) Install the muffler onto the catalytic converter. Make sure that the tailpipe has sufficient clearance from the floor pan. Install exhaust clamp and tighten the nuts to 47 N·m (35 ft. lbs.) torque (Fig. 19) .

(4) Lower the vehicle.

(5) Start the engine and inspect for exhaust leaks and exhaust system contact with the body panels. Adjust the alignment, if needed.

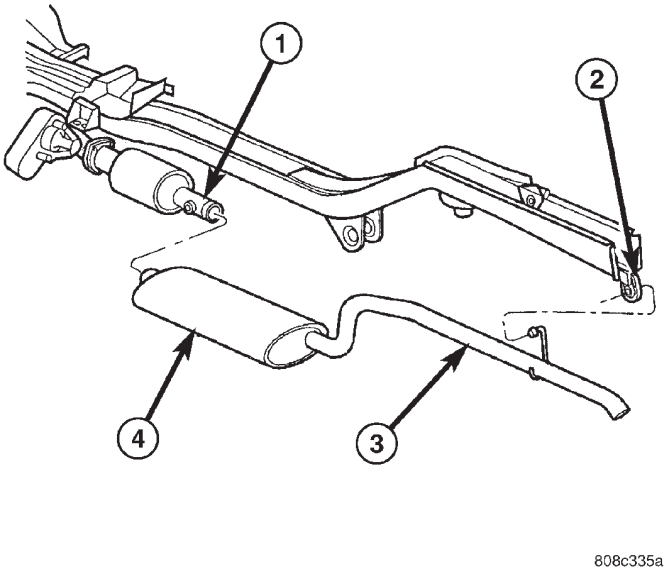

Fig. 20 Muffler and Tailpipe

1 - CATALYTIC CONVERTER
2 - TAILPIPE HANGER
3 - TAILPIPE
4 - MUFFLER

TAILPIPE

DESCRIPTION

The tailpipe is also made of stainless steel. (Fig. 18) .

OPERATION

The Tailpipe channels the exhaust out of the muffler and out from under the vehicle to control noise and prevent exhaust gas fumes from entering the passenger compartment

FRAMES & BUMPERS

TABLE OF CONTENTS

page

BUMPERS
DESCRIPTION 1
OPERATION 1
FRONT ABSORBER
REMOVAL 1
INSTALLATION. 1
FRONT FASCIA
REMOVAL 1
INSTALLATION. 1
REAR ABSORBER
REMOVAL 2
INSTALLATION. 2
REAR FASCIA
REMOVAL 2
INSTALLATION. 4
FRAME
DESCRIPTION 4
SPECIFICATIONS 4
FRONT SKID PLATE
REMOVAL 7
INSTALLATION. 7
FRONT TOW HOOK
REMOVAL 7
INSTALLATION. 7
FUEL TANK SKID PLATE
DESCRIPTION 7
REAR TOW HOOK
REMOVAL 7
INSTALLATION. 7
TRAILER HITCH
REMOVAL 8
INSTALLATION. 8
TRANSFER CASE SKID PLATE
REMOVAL 8
INSTALLATION. 8

BUMPERS

DESCRIPTION

The bumpers on the Jeep Grand Cherokee are made up of an absorber attached to the unibody frame rails and covered by the front and rear fascia. Some Grand Cherokee models also have a tow hook support bracket fastened to the front unibody rail crossmember.

OPERATION

The bumpers absorb minor impacts and protect exterior sheetmetal components.

FRONT ABSORBER

REMOVAL

(1) Remove front fascia, refer to (Refer to 13 - FRAMES & BUMPERS/BUMPERS/FRONT FASCIA - REMOVAL).

(2) Remove the retainer attaching the absorber to the fascia.

(3) Separate the absorber from the fascia.

INSTALLATION

(1) Position the absorber on the fascia.

(2) Install the retainer attaching the absorber to the fascia.

(3) Install front fascia. Refer to (Refer to 13 - FRAMES & BUMPERS/BUMPERS/FRONT FASCIA - INSTALLATION).

FRONT FASCIA

REMOVAL

(1) Raise and support vehicle.

(2) Turn front wheels to access rivets and remove plastic rivets attaching fascia to wheel liner.

(3) Remove bolts attaching fascia to fender (Fig. 1).

(4) Remove plastic push pin fasteners attaching front fascia to lower radiator crossmember splash shield (Fig. 2).

(5) Disengage fog lamp connectors, if equipped.

(6) Remove screws attaching fascia/grille to upper radiator crossmember (Fig. 3).

(7) Slide fascia forward to separate from vehicle.

INSTALLATION

(1) Slide fascia onto vehicle engaging fascia with tabs on bottom of front fenders.

(2) Install screws attaching fascia/grille to upper radiator crossmember (Fig. 3).

(3) Install bolts attaching fascia to fender (Fig. 1).

(4) Engage fog lamp connectors, if equipped.

(5) Install plastic rivets attaching fascia to wheel liner.

FRONT FASCIA (Continued)

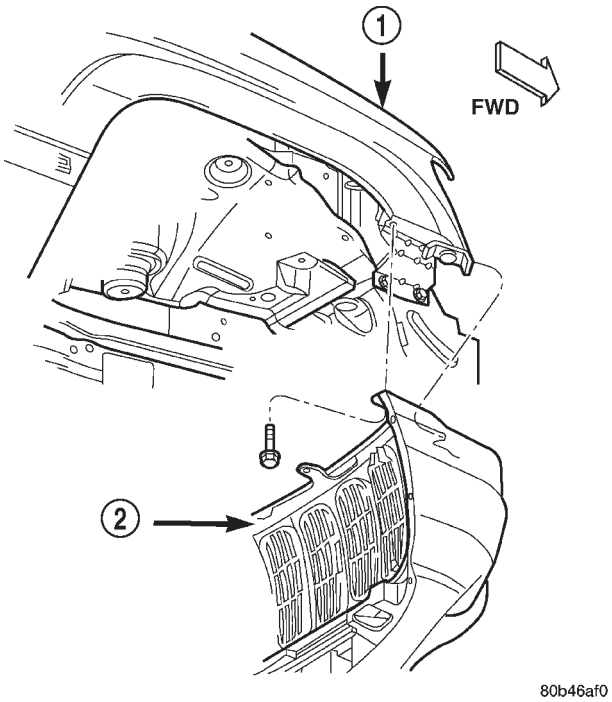

Fig. 1 Front Fascia

1 - BODY
2 - FASCIA

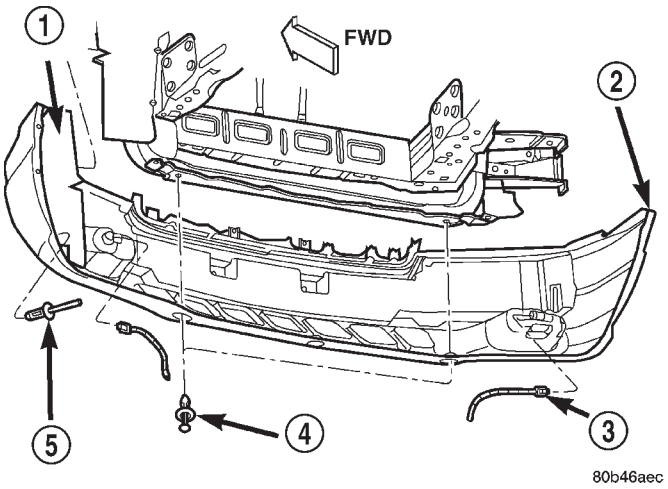

Fig. 2 Front Fascia

1 - WHEEL LINER
2 - FASCIA
3 - FOG LAMP CONNECTOR
4 - PLASTIC PUSH PIN
5 - PLASTIC RIVET

(6) Install plastic push pin fasteners attaching front fascia to lower radiator crossmember splash shield (Fig. 2).

(7) Remove supports and lower vehicle.

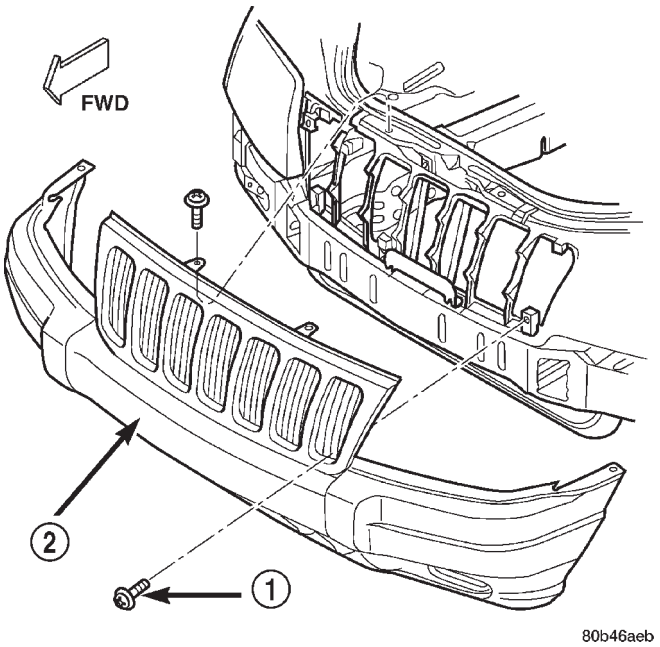

Fig. 3 Front Fascia

1 - SCREW
2 - FASCIA

REAR ABSORBER

REMOVAL

(1) Remove rear fascia, refer to (Refer to 13 - FRAMES & BUMPERS/BUMPERS/REAR FASCIA - REMOVAL).

(2) Remove rivets attaching absorber to rear crossmember (Fig. 5).

(3) Separate absorber from vehicle.

INSTALLATION

(1) Position absorber on vehicle.

(2) Install rivets attaching absorber to rear crossmember (Fig. 2).

(3) Install rear fascia, refer to (Refer to 13 - FRAMES & BUMPERS/BUMPERS/REAR FASCIA - INSTALLATION).

REAR FASCIA

REMOVAL

(1) Raise and support vehicle.

(2) Remove wheels.

(3) Remove plastic push pins attaching fascia to fuel tank skid plate.

(4) Remove plastic rivets attaching fascia to wheel liner.

(5) Remove nuts attaching upper edge of fascia to quarter panel and wheel liner (Fig. 4).

REAR FASCIA (Continued)

(6) Remove plastic push pins attaching fascia to liftgate opening (Fig. 5).

(7) Remove screws attaching fascia to liftgate opening.

(8) Remove D pillar trim and scuff plate outboard screws.

(9) Remove the rearward tie down screws and the aperture trim panel.

(10) Carefully peel back the rubber body sealer patch to access the retainer clips.

(11) Release the forward and rearward retainer clips on both sides of the fascia.

(12) Grasp forward edges of fascia and pull outward to disengage retainers attaching fascia to quarter panel (Fig. 6).

(13) Separate fascia from vehicle.

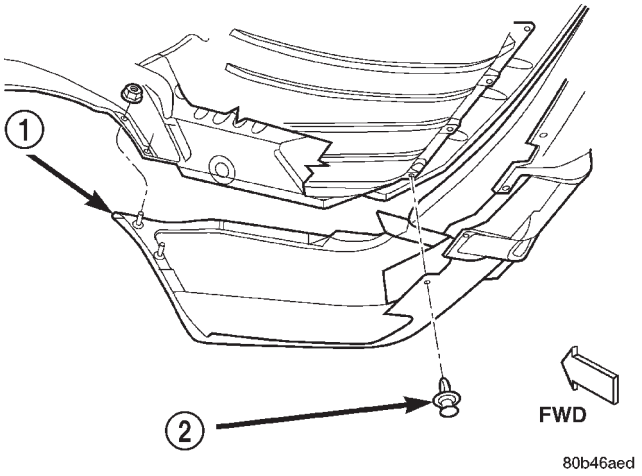

Fig. 4 Rear Fascia Attachment

1 - FASCIA
2 - PLASTIC PUSH PIN

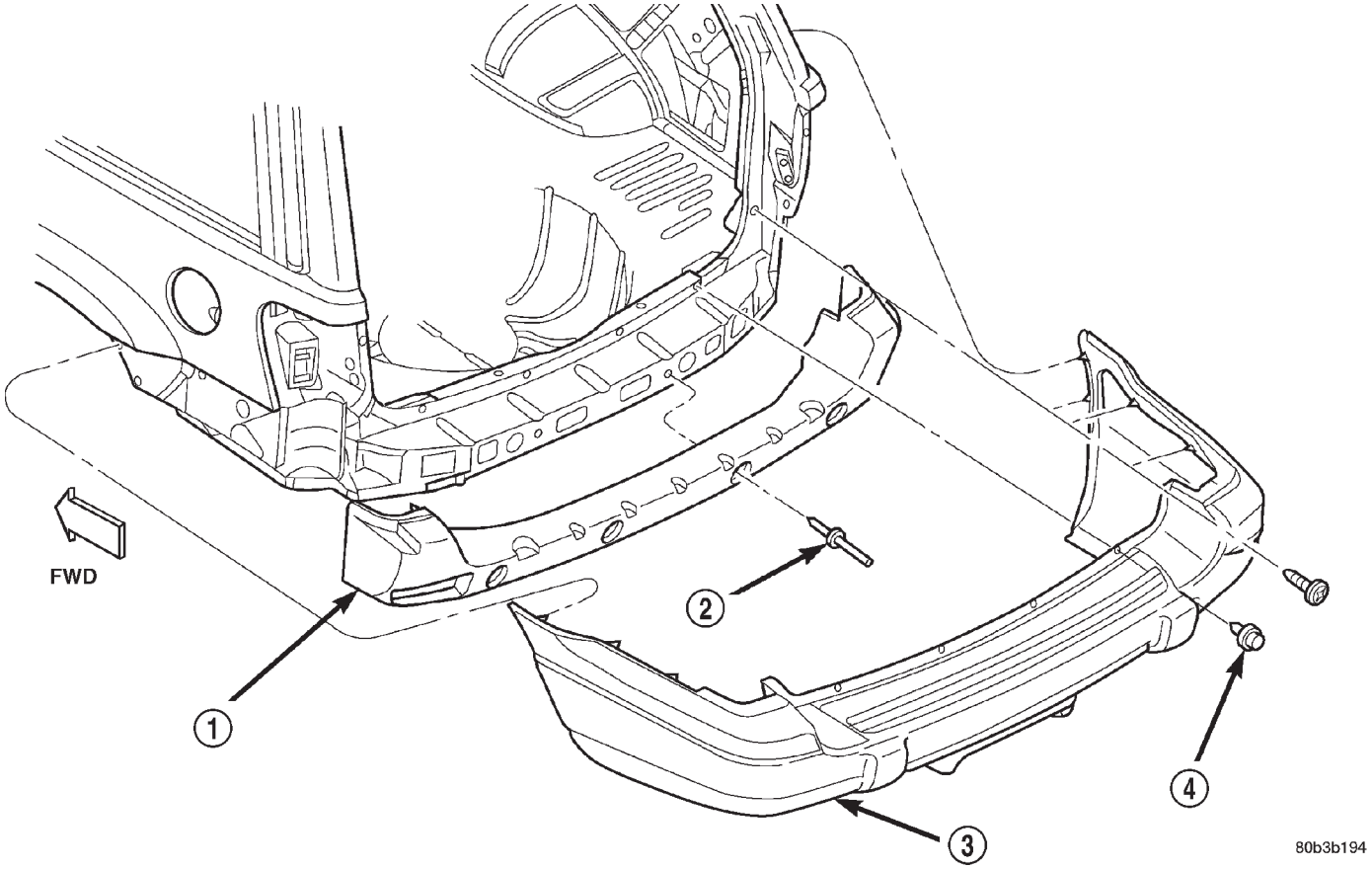

Fig. 5 Rear Fascia

1 - ABSORBER
2 - RIVET
3 - FASCIA
4 - PLASTIC PUSH PIN

REAR FASCIA (Continued)

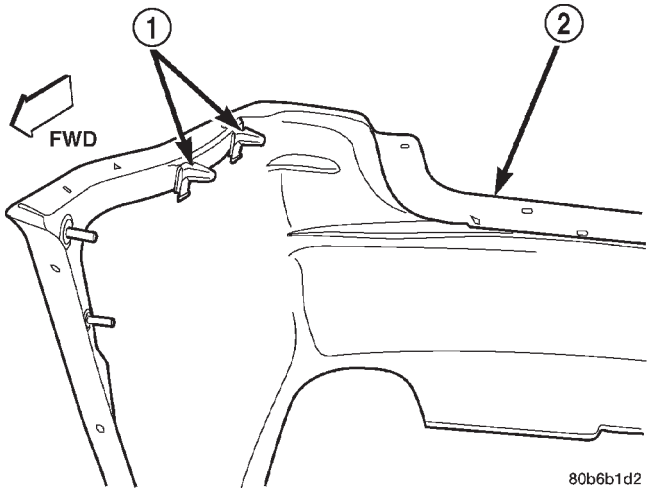

Fig. 6 Rear Fascia Retainers

1 - RETAINER
2 - FASCIA

INSTALLATION

(1) Position fascia on vehicle aligning retainers with slots in quarter panel (Fig. 7).

(2) Press forward edges of fascia inward to engage retainers.

(3) Install screws attaching fascia to liftgate opening.

(4) Install plastic push pins attaching fascia to liftgate opening.

(5) Install nuts attaching upper edge of fascia to quarter panel and wheel liner.

(6) Install plastic rivets attaching fascia to wheel liner.

(7) Install support lower vehicle.

(8) Install plastic push pins attaching fascia to fuel tank skid plate.

(9) Install the interior trim panels removed to access fascia retainers.

(10) Install tie down loop screws.

(11) Install the wheels, refer to section 22 for tightening sequence and torque specifications.

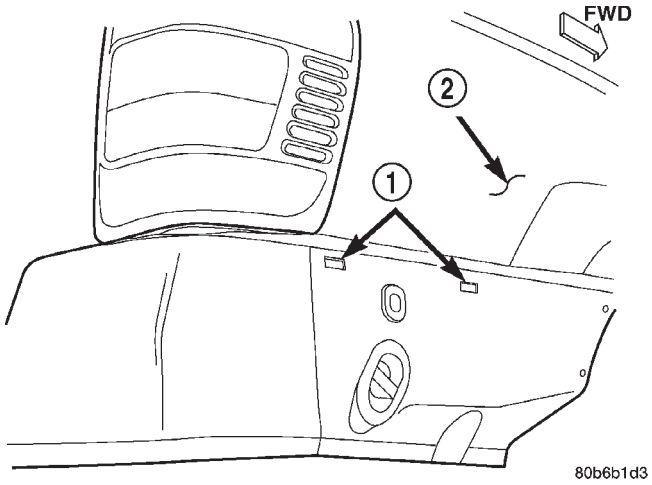

Fig. 7 Fascia Attachment

1 - SLOT
2 - QUARTER PANEL

FRAME

DESCRIPTION

Jeep Grand Cherokee vehicles do not have a conventional frame. They are constructed as a unitized body and frame. Jeep unibodies are constructed from special high strength steel and coated metals. This process reduces weight and provides strength to withstand the forces applied against structural members. The structural members provide a unibody that has great structural strength.

SPECIFICATIONS

SPECIFICATIONS -

TORQUE SPECIFICATIONS

DESCRIPTION	N·m	Ft. Lbs.	In. Lbs.
Front Tow Hook Bolt	54	40	—
Front Skid Plate Bolt	54	40	—
Rear Tow Hook Bolt	68	50	—
Trailer Hitch Bolts	68	50	—
Transfer Case Skid Plate Bolts	34	25	—

FRAME DIMENSIONS

SPECIFICATIONS (Continued)

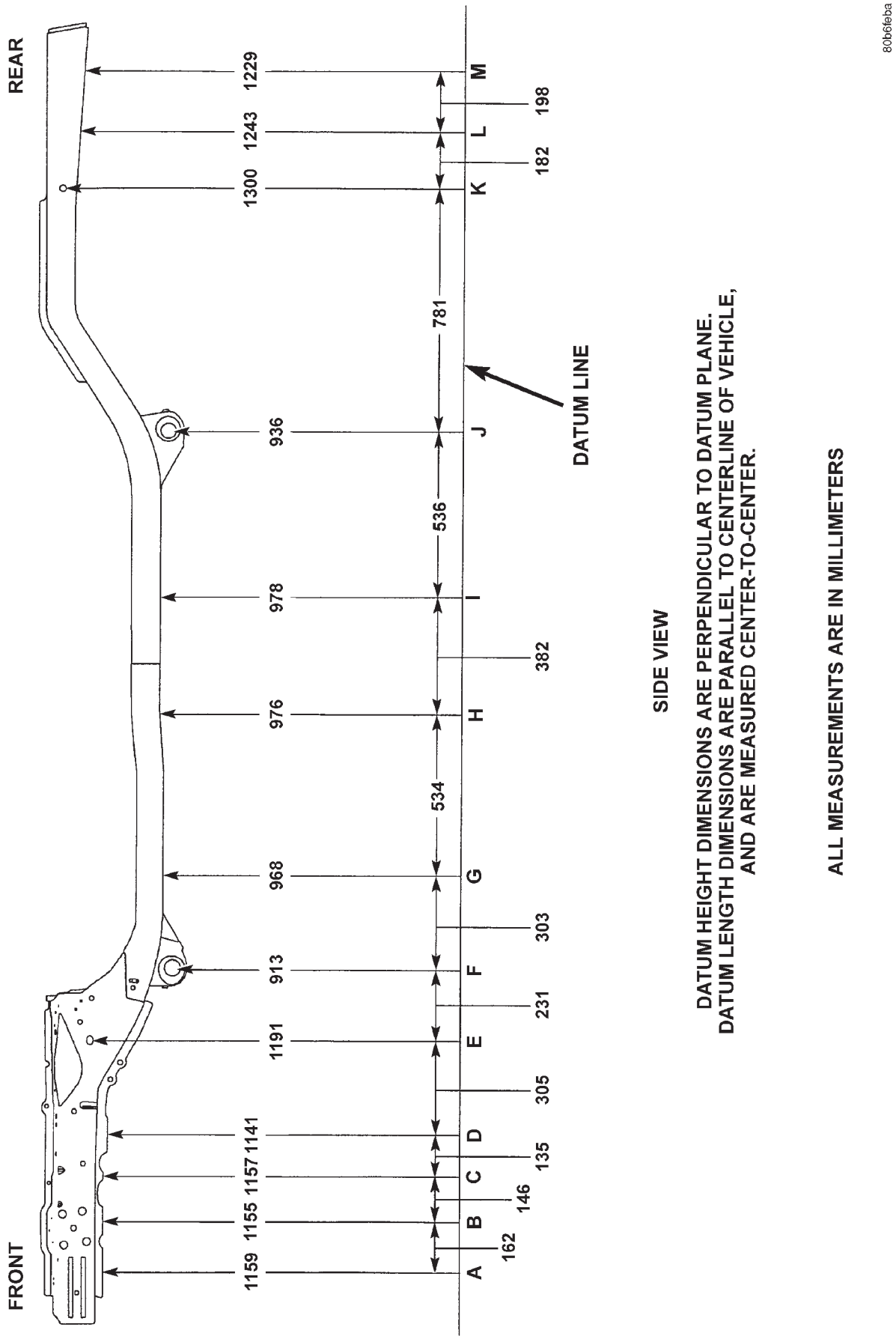

SIDE VIEW

SPECIFICATIONS (Continued)

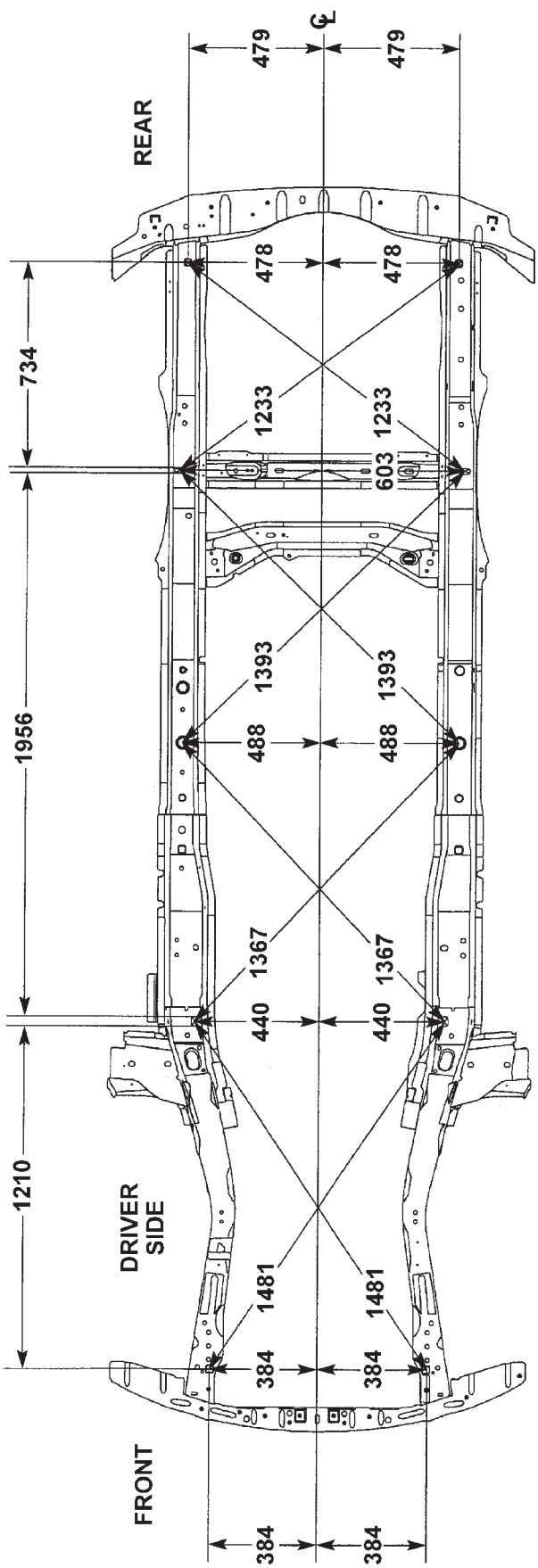

BOTTOM VIEW

BOTTOM VIEW POINT-TO-POINT DIMENSIONS ARE TAKEN WITH TRAM BAR POINTERS SET AT EQUAL LENGTHS. BOLTS AND STUDS ARE MEASURED TO CENTER. HOLES ARE MEASURED TO CLOSEST EDGE.

ALL MEASUREMENTS ARE IN MILLIMETERS

80b6febb

BOTTOM VIEW

FRONT SKID PLATE

REMOVAL

(1) Position a support under skid plate.
(2) Remove bolts attaching skid plate to frame (Fig. 8).
(3) Separate skid plate from frame.

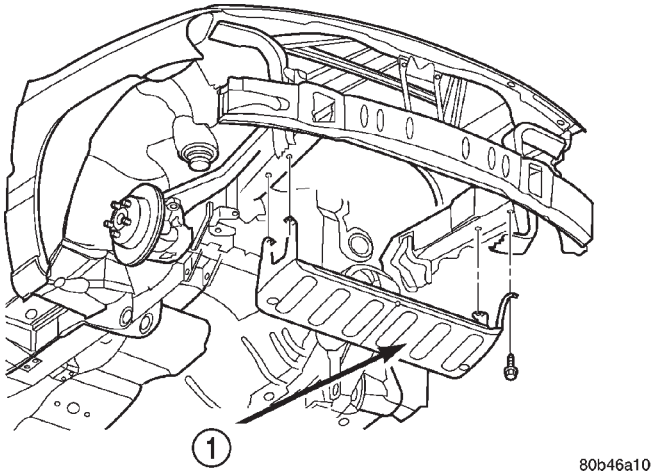

Fig. 8 Front Skid Plate

1 - SKID PLATE

INSTALLATION

(1) Position skid plate on a support.
(2) Raise it into position
(3) Install bolts attaching skid plate to frame. Tighten bolts to 54 N·m (40 ft. lbs.) torque.

FRONT TOW HOOK

REMOVAL

(1) Remove bolts that attach tow hook bracket to the lower crossmember (Fig. 9).
(2) Separate tow hook bracket from lower crossmember.

INSTALLATION

(1) Position tow hook bracket at the lower crossmember.
(2) Install bolts attaching tow hook bracket to crossmember. Tighten bolts to 54 N·m (40 ft. lbs.) torque.

FUEL TANK SKID PLATE

DESCRIPTION

The fuel tank skid plate is integrated with the fuel tank. Refer to Fuel Tank for service procedures

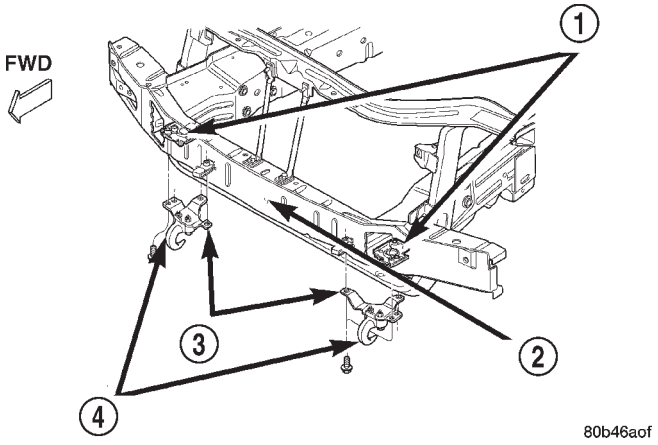

Fig. 9 Front Tow Hook

1 - TAPPING PLATE
2 - CROSSMEMBER
3 - BRACKET
4 - TOW HOOK

REAR TOW HOOK

REMOVAL

(1) Remove rear tow hook to frame brace.
(2) Remove bolts attaching the tow hook bracket to frame (Fig. 10).
(3) Separate tow hook bracket from frame.

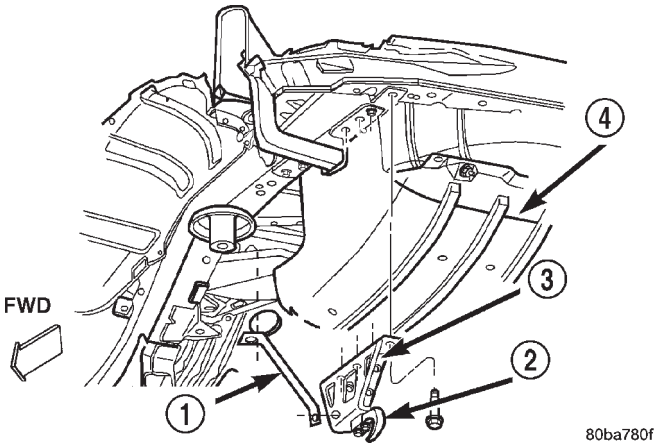

Fig. 10 Rear Tow Hook

1 - TOW HOOK BRACE
2 - TOW HOOK
3 - BRACKET
4 - FUEL TANK

INSTALLATION

(1) position tow hook bracket on frame.
(2) Install bolts attaching tow hook bracket to frame. Tighten bolts to 68 N·m (50 ft. lbs.) torque.
(3) Install rear tow hook to frame brace.

TRAILER HITCH

REMOVAL

(1) Remove rear fascia, refer to (Refer to 13 - FRAMES & BUMPERS/BUMPERS/REAR FASCIA - REMOVAL).

(2) Remove screws attaching trailer harness plug to trailer hitch.

(3) Disconnect harness connector from harness plug.

(4) Position support stands under trailer hitch.

(5) Remove bolts attaching trailer hitch to frame rails (Fig. 11).

(6) Separate trailer hitch from vehicle.

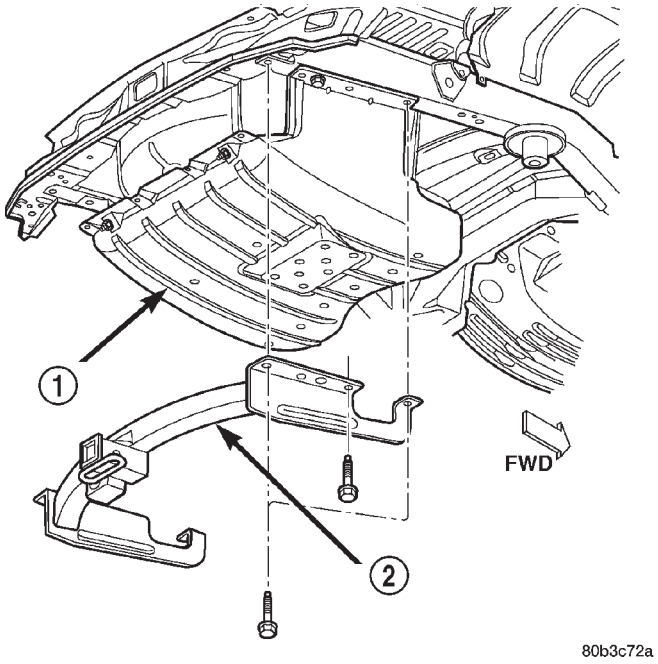

Fig. 11 Trailer Hitch

1 - FUEL TANK
2 - TRAILER HITCH

INSTALLATION

(1) Position trailer hitch on support stands.

(2) Position trailer hitch on vehicle.

(3) Install bolts attaching trailer hitch to frame rails. Tighten bolts to 68 N·m (50 lbs.) torque.

(4) Connect harness connector to harness plug.

(5) Position harness plug in trailer hitch and install screws.

(6) Install rear fascia, refer to (Refer to 13 - FRAMES & BUMPERS/BUMPERS/REAR FASCIA - INSTALLATION).

TRANSFER CASE SKID PLATE

REMOVAL

(1) Support skid plate.

(2) Remove bolts that attach skid plate to transmission support crossmember and frame sill (Fig. 12).

(3) Remove support and skid plate from vehicle.

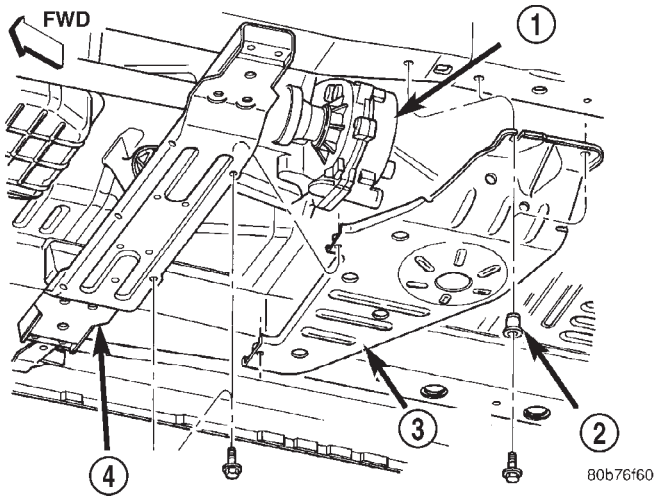

Fig. 12 Transfer Case Skid Plate

1 - TRANSFER CASE
2 - NUTSERT
3 - SKID PLATE
4 - CROSSMEMBER

INSTALLATION

(1) Install nutserts, if removed.

(2) Position and support skid plate at the frame sill and transmission support crossmember.

(3) Attach skid plate to frame sill and crossmember with the bolts. Tighten bolts to 34 N·m (25 ft. lbs) torque.

FUEL SYSTEM

TABLE OF CONTENTS

page

FUEL DELIVERY 1
FUEL INJECTION 27

FUEL DELIVERY

TABLE OF CONTENTS

page

FUEL DELIVERY
DESCRIPTION 1
OPERATION 2
DIAGNOSIS AND TESTING 2
FUEL PRESSURE LEAK DOWN TEST 2
STANDARD PROCEDURE 3
FUEL SYSTEM PRESSURE RELEASE 3
SPECIFICATIONS 4
SPECIAL TOOLS 5
FUEL FILTER/PRESSURE REGULATOR
DESCRIPTION 5
OPERATION 6
REMOVAL 6
INSTALLATION 6
FUEL LEVEL SENDING UNIT / SENSOR
DESCRIPTION 7
OPERATION 7
DIAGNOSIS AND TESTING 7
FUEL GAUGE SENDING UNIT 7
REMOVAL 8
INSTALLATION 8
FUEL LINES
DESCRIPTION 8
FUEL PUMP
DESCRIPTION 9
OPERATION 9
DIAGNOSIS AND TESTING 9
FUEL PUMP CAPACITY TEST 9
FUEL PUMP AMPERAGE TEST 9
FUEL PUMP PRESSURE TEST 11
FUEL PUMP MODULE
DESCRIPTION 13
OPERATION 13
REMOVAL 13
INSTALLATION 13
FUEL RAIL
DESCRIPTION 14
OPERATION 15
REMOVAL 15
INSTALLATION 18
FUEL TANK
DESCRIPTION 18
OPERATION 19
REMOVAL 19
INSTALLATION 20
INLET FILTER
REMOVAL 22
INSTALLATION 22
QUICK CONNECT FITTING
DESCRIPTION 22
STANDARD PROCEDURE 22
QUICK-CONNECT FITTINGS 22
ROLLOVER VALVE
DESCRIPTION 25
OPERATION 25
REMOVAL 26

FUEL DELIVERY

DESCRIPTION

The fuel delivery system consists of:

- the fuel pump module containing the electric fuel pump, fuel gauge sending unit (fuel level sensor) and a separate fuel filter located at bottom of pump module
- a separate combination fuel filter/fuel pressure regulator
- fuel tubes/lines/hoses
- quick-connect fittings
- fuel injector rail

FUEL DELIVERY (Continued)

- fuel injectors
- fuel tank
- fuel tank filler/vent tube assembly
- fuel tank filler tube cap
- accelerator pedal
- throttle cable

OPERATION

The fuel tank assembly consists of: the fuel tank, fuel tank shield, fuel tank straps, fuel pump module assembly, fuel pump module locknut/gasket, and roll-over valve (refer to Emission Control System for roll-over valve information).

A fuel filler/vent tube assembly using a pressure/vacuum, 1/4 turn fuel filler cap is used. The fuel filler tube contains a flap door located below the fuel fill cap.

Also to be considered part of the fuel system is the evaporation control system. This is designed to reduce the emission of fuel vapors into the atmosphere. The description and function of the Evaporative Control System is found in Emission Control Systems.

Both fuel filters (at bottom of fuel pump module and within fuel pressure regulator) are designed for extended service. They do not require normal scheduled maintenance. Filters should only be replaced if a diagnostic procedure indicates to do so.

DIAGNOSIS AND TESTING - FUEL PRESSURE LEAK DOWN TEST

Use this test in conjunction with the Fuel Pump Pressure Test and Fuel Pump Capacity Test.

Check Valve Operation: The electric fuel pump outlet contains a one-way check valve to prevent fuel flow back into the tank and to maintain fuel supply line pressure (engine warm) when pump is not operational. It is also used to keep the fuel supply line full of gasoline when pump is not operational. After the vehicle has cooled down, fuel pressure may drop to 0 psi (cold fluid contracts), but liquid gasoline will remain in fuel supply line between the check valve and fuel injectors. **Fuel pressure that has dropped to 0 psi on a cooled down vehicle (engine off) is a normal condition.** When the electric fuel pump is activated, fuel pressure should **immediately** (1–2 seconds) rise to specification.

Abnormally long periods of cranking to restart a **hot** engine that has been shut down for a short period of time may be caused by:

- Fuel pressure bleeding past a fuel injector(s).
- Fuel pressure bleeding past the check valve in the fuel pump module.
- A defective fuel filter/pressure regulator.

Two #6539, 5/16”, Fuel Line Pressure Test Adapter Hose Tools are required for the following tests.

(1) Release fuel system pressure. Refer to Fuel Pressure Release Procedure.

(2) Raise vehicle.

Fuel Line Identification: The fuel filter/pressure regulator is located in front of the fuel tank and above the rear axle. It is transversely mounted to a chassis crossmember (left-to-right). The filter/regulator is equipped with 3 fuel line fittings (2 at one end and 1 at the other end). The single fitting facing the left side of the vehicle is the supply line to the fuel rail (Fig. 1). The 2 fittings facing the right side of the vehicle are connected to the fuel tank. Of these 2 fittings, the fitting towards the **front** is used for fuel return to the fuel tank. The fitting towards the **rear** is a pressure line. This **rear** fitting must be disconnected for the following step.

(3) See previous step. Disconnect fuel pressure line at **rear** of filter/regulator. This is a 5/16″ quick-connect fitting (Fig. 1). Refer to Quick-Connect Fittings for procedures.

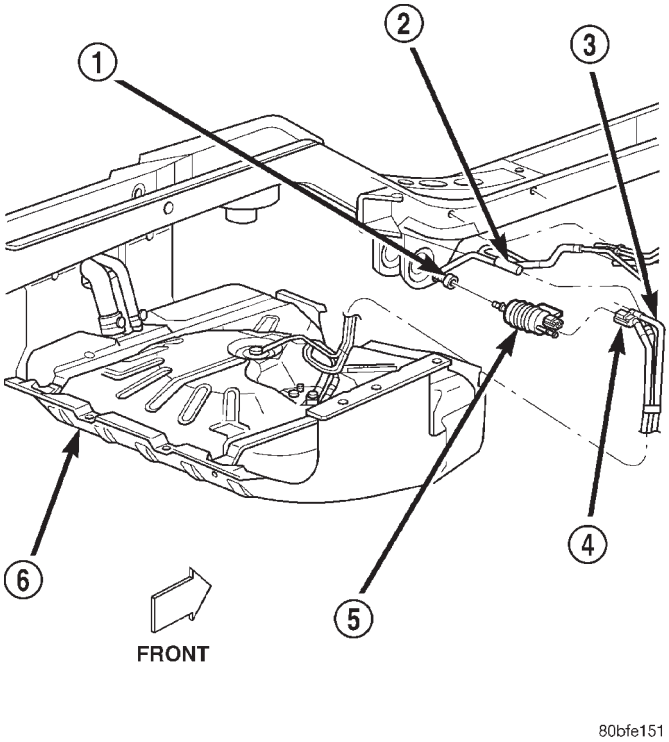

Fig. 1 Disconnect Fuel Pressure Line at Filter/Regulator

1 - FUEL SUPPLY LINE (TO FUEL RAIL)
2 - EVAP LINE
3 - FUEL RETURN LINE (MALE)
4 - FUEL PRESSURE LINE (FEMALE)
5 - FUEL FILTER/PRESSURE REGULATOR
6 - FUEL TANK

(4) Obtain correct Fuel Line Pressure Test Adapter Hose Tool # 6539 for 5/16” fuel lines. Connect one end of this Special Tool into the disconnected fuel

FUEL DELIVERY (Continued)

pressure line. Connect the other end of the Tool into fitting on filter/regulator.

(5) Lower vehicle.

(6) Disconnect the fuel inlet line at fuel rail. Refer to Quick-Connect Fittings for procedures. On some engines, air cleaner housing removal may be necessary before fuel line disconnection.

(7) Obtain a second Fuel Line Pressure Test Adapter Hose Tool # 6539 for 5/16" fuel lines. Connect this tool between disconnected fuel line and fuel rail (Fig. 2).

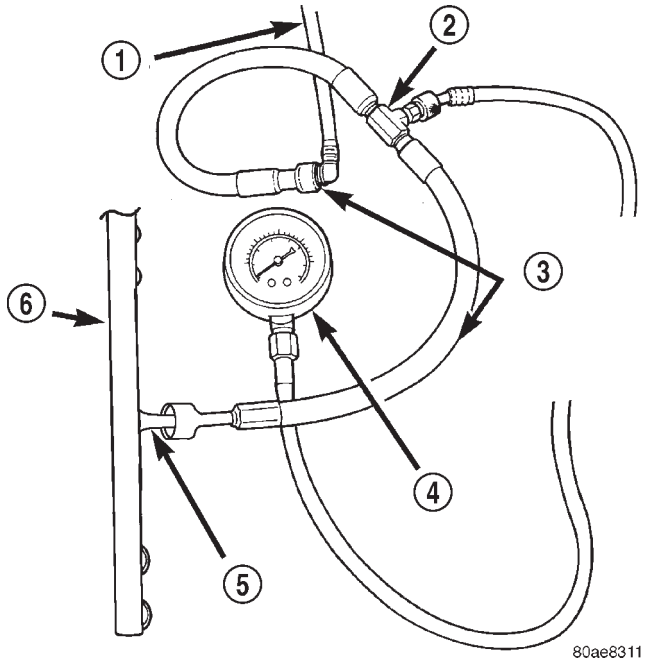

Fig. 2 Connecting Adapter Tool—Typical

1 - VEHICLE FUEL LINE
2 - TEST PORT "T"
3 - SPECIAL TOOL 6923, 6631, 6541 OR 6539
4 - FUEL PRESSURE TEST GAUGE
5 - FUEL LINE CONNECTION AT RAIL
6 - FUEL RAIL

(8) Connect the 0-414 kPa (0-60 psi) fuel pressure test gauge (from Gauge Set 5069) to the test port on the appropriate Adaptor Tool. **NOTE: The DRB III Scan Tool along with the PEP module, the 500 psi pressure transducer, and the transducer-to-test port adapter may also be used in place of the fuel pressure gauge.**

CAUTION: The fittings on both tools must be in good condition and free from any small leaks before performing the proceeding test.

(9) Start engine and bring to normal operating temperature.

(10) Observe fuel pressure test gauge (or DRB screen). Normal operating pressure should be 339 kPa ± 34 kPa (49.2 psi ± 5 psi).

(11) Shut engine off.

(12) Pressure should not fall below **30 psi for five minutes.**

(13) If pressure falls below 30 psi, it must be determined if a fuel injector, the supply check valve within the fuel pump module, the fuel filter/pressure regulator, or a fuel tube/line is leaking.

(14) Again, start engine and bring to normal operating temperature.

(15) Shut engine off.

(16) **Testing for fuel injector or fuel rail leakage:** Clamp off the rubber hose portion of the 6539 Adaptor Tool between the fuel rail and the test port "T" on Adapter Tool (be sure clamping pressure is sufficient). If pressure now holds at or above 30 psi, a fuel injector or the fuel rail is leaking.

(17) Again, start engine and bring to normal operating temperature.

(18) Shut engine off.

(19) Raise vehicle.

(20) **Testing for fuel filter/pressure regulator leakage:** While continuing to securely clamp between the fuel rail and the test port ″T″ on Adaptor Tool 6539, securely clamp off **any** rubber hose portion of the Adaptor Tool 6539 that was installed between the fuel pressure line and the filter/regulator fitting (by restricting the pump module supply line's backflow, you isolate any leakdown originating from the filter/regulator via the tank return line.) If the pressure falls below 30 psi within 5 minutes, the filter/regulator is leaking. If it now holds at or above 30 psi, the electric fuel pump check valve is leaking or a fuel tube/line is leaking. A fuel odor presence would indicate the latter.

The electric fuel pump is not serviced separately. If replacement is necessary, replace the fuel pump module assembly. The filter/regulator may be replaced separately. Refer to Fuel Filter/Fuel Pressure Regulator Removal/Installation for additional information.

STANDARD PROCEDURE - FUEL SYSTEM PRESSURE RELEASE

Use following procedure if the fuel injector rail is, or is not equipped with a fuel pressure test port.

(1) Remove fuel fill cap.

(2) Remove fuel pump relay from Power Distribution Center (PDC). For location of relay, refer to label on underside of PDC cover.

(3) Start and run engine until it stalls.

(4) Attempt restarting engine until it will no longer run.

FUEL DELIVERY (Continued)

(5) Turn ignition key to OFF position.

CAUTION: Steps 1, 2, 3 and 4 must be performed to relieve high pressure fuel from within fuel rail. Do not attempt to use following steps to relieve this pressure as excessive fuel will be forced into a cylinder chamber.

(6) Unplug connector from any fuel injector.
(7) Attach one end of a jumper wire with alligator clips (18 gauge or smaller) to either injector terminal.
(8) Connect other end of jumper wire to positive side of battery.
(9) Connect one end of a second jumper wire to remaining injector terminal.

CAUTION: Powering an injector for more than a few seconds will permanently damage the injector.

(10) Momentarily touch other end of jumper wire to negative terminal of battery for no more than a few seconds.
(11) Place a rag or towel below fuel line quick-connect fitting at fuel rail.
(12) Disconnect quick-connect fitting at fuel rail. Refer to Quick-Connect Fittings.
(13) Return fuel pump relay to PDC.
(14) One or more Diagnostic Trouble Codes (DTC's) may have been stored in PCM memory due to fuel pump relay removal. The DRB® scan tool must be used to erase a DTC.

SPECIFICATIONS

FUEL SYSTEM PRESSURE
339 kPa ± 34 kPa (49.2 psi ± 5 psi).

TORQUE - FUEL DELIVERY

DESCRIPTION	N-m	Ft. Lbs.	In. Lbs.
Accelerator Pedal Bracket Mounting Nuts	12 ±2		105 ±20
Fuel Filter/Fuel Press. Reg. Bolts	3		26
Fuel Hose Clamps	3		26
Fuel Injector Rail Mounting Bolts—4.0L Engine	11		100
Fuel Injector Rail Mounting Bolts—4.7L V–8 Engine	11		100
Fuel Pump Module Locknut	74	55	
Fuel Tank Filler Tube-to-Body Mounting Bolts	2		15
Fuel Tank Mounting Bolts	81	60	

SPECIAL TOOLS

FUEL SYSTEM

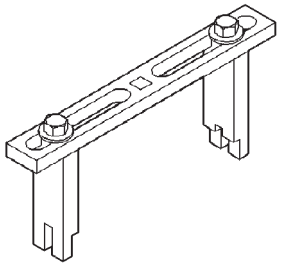

Spanner Wrench—6856

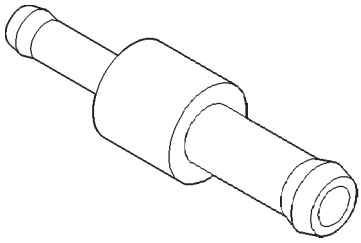

Fitting, Air Metering—6714

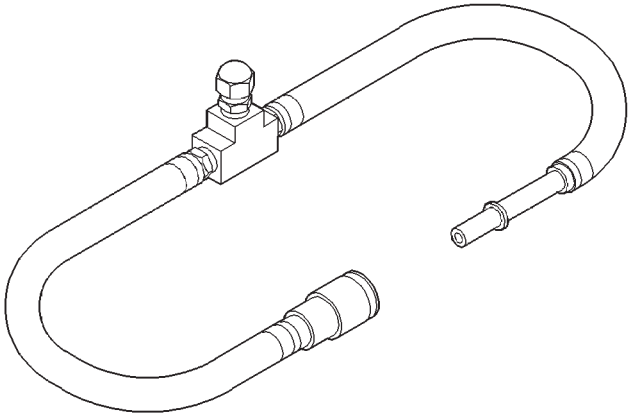

Adapters, Fuel Pressure Test—6539 and/or 6631

O2S (Oxygen Sensor) Remover/Installer—C-4907

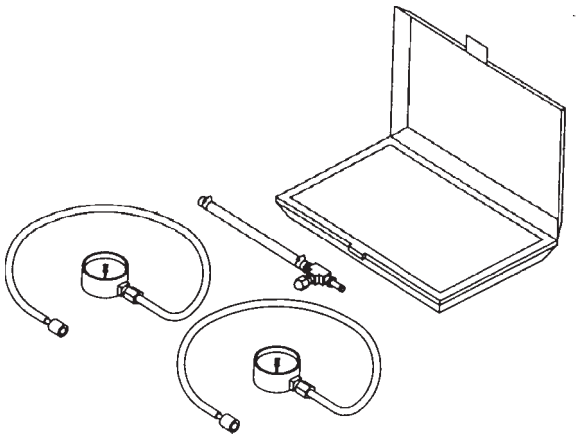

Test Kit, Fuel Pressure—5069

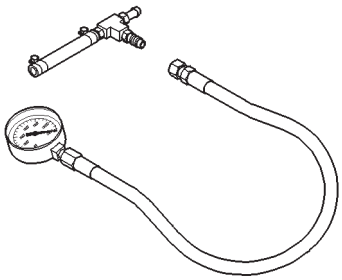

Test Kit, Fuel Pressure—C-4799-B

Fuel Line Removal Tool—6782

FUEL FILTER/PRESSURE REGULATOR

DESCRIPTION

The combination fuel filter/pressure regulator is located in front of the fuel tank and above the rear axle (Fig. 3). It is transversely mounted to a chassis crossmember (left-to-right). **Fuel Line Identification:** The filter/regulator is equipped with 3 fuel line fittings (2 at one end and 1 at the other end). The single fitting facing the left side of the vehicle is the supply line to the fuel rail (Fig. 3). The 2 fittings facing the right side of the vehicle are connected to the fuel tank. Of these 2 fittings, the fitting towards the **front** is used for fuel return to the fuel tank. The fitting towards the **rear** is a pressure line.

FUEL FILTER/PRESSURE REGULATOR (Continued)

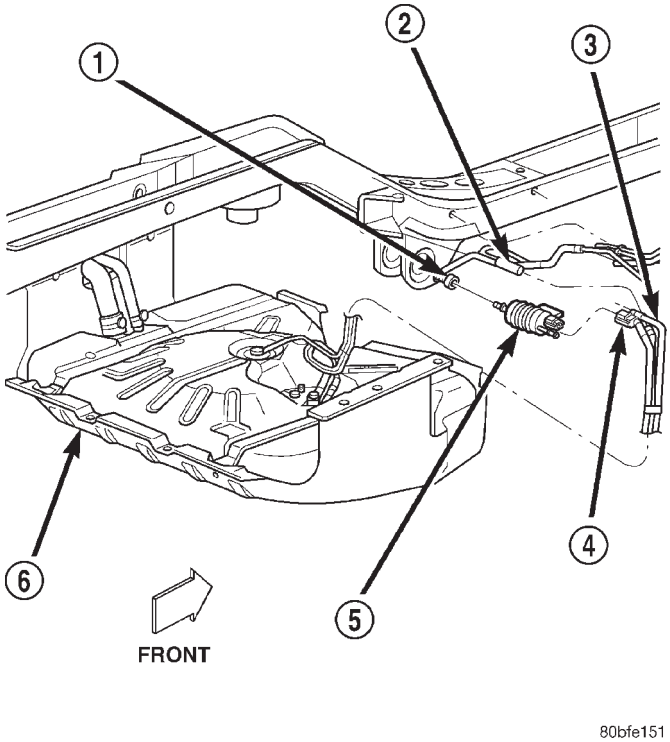

Fig. 3 Fuel Filter/Fuel Pressure Regulator Location

1 - FUEL SUPPLY LINE (TO FUEL RAIL)
2 - EVAP LINE
3 - FUEL RETURN LINE (MALE)
4 - FUEL PRESSURE LINE (FEMALE)
5 - FUEL FILTER/PRESSURE REGULATOR
6 - FUEL TANK

OPERATION

Fuel Pressure Regulator Operation: The pressure regulator is a mechanical device that is not controlled by engine vacuum or the Powertrain Control Module (PCM).

The regulator is calibrated to maintain fuel system operating pressure of approximately 339 kPa ± 34 kPa (49.2 psi ± 5 psi) at the fuel injectors. It contains a diaphragm, calibrated springs and a fuel return valve. The internal fuel filter is also part of the assembly.

Fuel is supplied to the filter/regulator by the electric fuel pump. The regulator acts as a check valve to maintain some fuel pressure when the engine is not operating. This will help to start the engine. A second check valve is located at the outlet end of the electric fuel pump.

If fuel pressure at the pressure regulator exceeds approximately 49 psi, an internal diaphragm closes. Excess fuel is then routed into a separate fuel return line and returned to the fuel tank through the top of the fuel pump module.

Both fuel filters (at bottom of fuel pump module and within fuel pressure regulator) are designed for extended service. They do not require normal scheduled maintenance. Filters should only be replaced if a diagnostic procedure indicates to do so.

REMOVAL

The combination Fuel Filter/Fuel Pressure Regulator is remotely mounted to the vehicle body, above the rear axle and near the front of the fuel tank (Fig. 4) or (Fig. 5).

(1) Perform Fuel System Pressure Release Procedure.

(2) Disconnect negative battery cable at battery.

(3) Raise vehicle.

(4) Clean area around 3 filter/regulator fittings.

(5) Disconnect fuel supply, fuel return and fuel pressure lines at filter/regulator (Fig. 4). Refer to Quick-Connect Fittings.

(6) Remove 2 mounting bolts (Fig. 5) and remove filter/regulator.

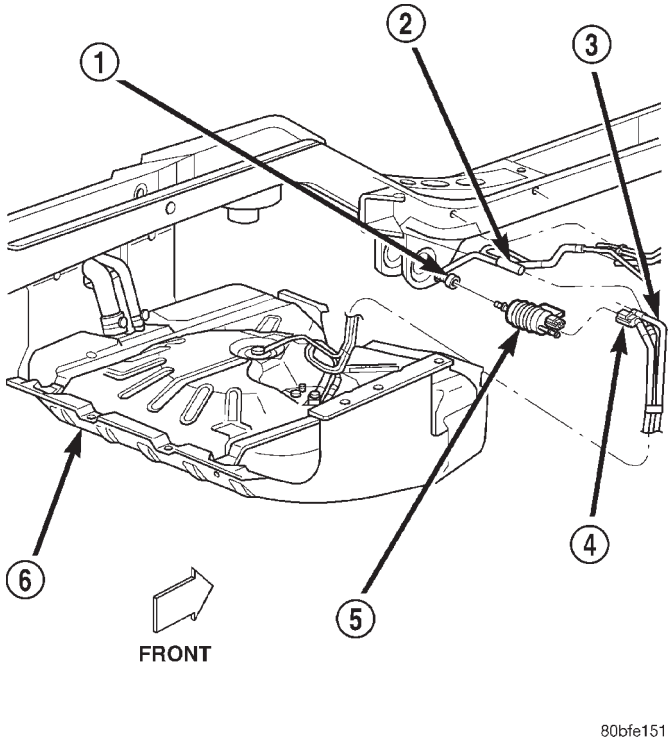

Fig. 4 Fuel Filter/Fuel Pressure Regulator Location

1 - FUEL SUPPLY LINE (TO FUEL RAIL)
2 - EVAP LINE
3 - FUEL RETURN LINE (MALE)
4 - FUEL PRESSURE LINE (FEMALE)
5 - FUEL FILTER/PRESSURE REGULATOR
6 - FUEL TANK

INSTALLATION

The combination Fuel Filter/Fuel Pressure Regulator is remotely mounted to the vehicle body, above the rear axle and near the front of the fuel tank (Fig. 4) or (Fig. 5).

FUEL FILTER/PRESSURE REGULATOR (Continued)

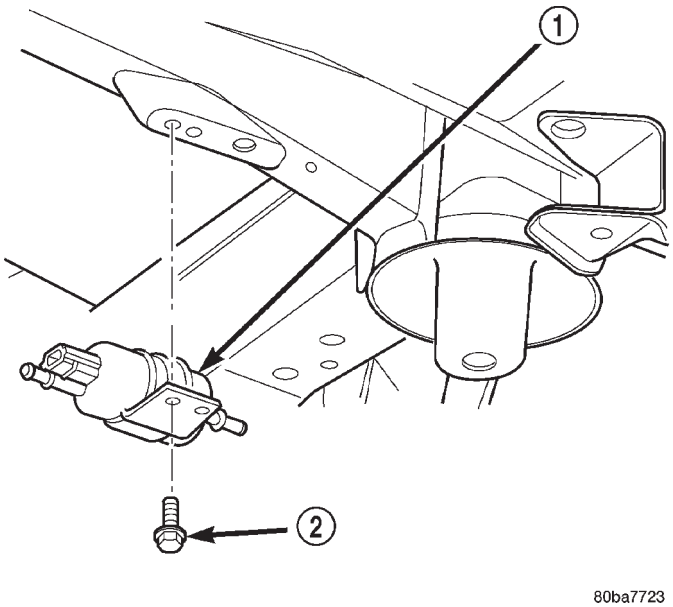

Fig. 5 Fuel Filter/Fuel Pressure Regulator Removal/ Installation

1 - FUEL FILTER/FUEL PRESSURE REGULATOR
2 - MOUNTING BOLTS (2)

(1) Before installing filter/regulator, be sure all fittings are cleaned of all dirt and contaminants.

(2) Be sure o-ring is positioned into fuel return fitting in filter/regulator.

(3) Apply a small amount of clean engine oil to o-rings.

(4) Position filter/regulator to body and install 2 bolts. Tighten bolts to 3 N·m (30 in. lbs.) torque.

(5) Connect 3 fittings. Refer to Quick-Connect Fittings.

(6) Connect negative battery cable to battery.

(7) Start engine and check for leaks.

FUEL LEVEL SENDING UNIT / SENSOR

DESCRIPTION

The fuel gauge sending unit (fuel level sensor) is attached to the side of the fuel pump module. The sending unit consists of a float, an arm, and a variable resistor track (card).

OPERATION

The fuel pump module has 4 different circuits (wires). Two of these circuits are used for the fuel gauge sending unit for fuel gauge operation, and for certain OBD II emission requirements. The other 2 wires are used for electric fuel pump operation.

For Fuel Gauge Operation: A constant input voltage source of about 12 volts (battery voltage) is supplied to the resistor track on the fuel gauge sending unit. This is fed directly from the Powertrain Control Module (PCM). **NOTE: For diagnostic purposes, this 12V power source can only be verified with the circuit opened (fuel pump module electrical connector unplugged). With the connectors plugged, output voltages will vary from about 0.6 volts at FULL, to about 8.6 volts at EMPTY (about 8.6 volts at EMPTY for Jeep models, and about 7.0 volts at EMPTY for Dodge Truck models).** The resistor track is used to vary the voltage (resistance) depending on fuel tank float level. As fuel level increases, the float and arm move up, which decreases voltage. As fuel level decreases, the float and arm move down, which increases voltage. The varied voltage signal is returned back to the PCM through the sensor return circuit.

Both of the electrical circuits between the fuel gauge sending unit and the PCM are hard-wired (not multi-plexed). After the voltage signal is sent from the resistor track, and back to the PCM, the PCM will interpret the resistance (voltage) data and send a message across the multi-plex bus circuits to the instrument panel cluster. Here it is translated into the appropriate fuel gauge level reading. Refer to Instrument Panel for additional information.

For OBD II Emission Monitor Requirements: The PCM will monitor the voltage output sent from the resistor track on the sending unit to indicate fuel level. The purpose of this feature is to prevent the OBD II system from recording/setting false misfire and fuel system monitor diagnostic trouble codes. The feature is activated if the fuel level in the tank is less than approximately 15 percent of its rated capacity. If equipped with a Leak Detection Pump (EVAP system monitor), this feature will also be activated if the fuel level in the tank is more than approximately 85 percent of its rated capacity.

DIAGNOSIS AND TESTING - FUEL GAUGE SENDING UNIT

The fuel gauge sending unit contains a variable resistor (track). As the float moves up or down, electrical resistance will change. Refer to Instrument Panel and Gauges for Fuel Gauge testing. To test the gauge sending unit only, it must be removed from vehicle. The unit is part of the fuel pump module. Refer to Fuel Pump Module Removal/Installation for procedures. Measure the resistance across the sending unit terminals. With float in up position, resistance should be 20 ohms (+/- 5%). With float in down position, resistance should be 270 ohms (+/- 5%).

FUEL LEVEL SENDING UNIT / SENSOR (Continued)

REMOVAL

The fuel gauge sending unit (fuel level sensor) and float assembly is located on the side of fuel pump module (Fig. 6). The fuel pump module is located within the fuel tank.

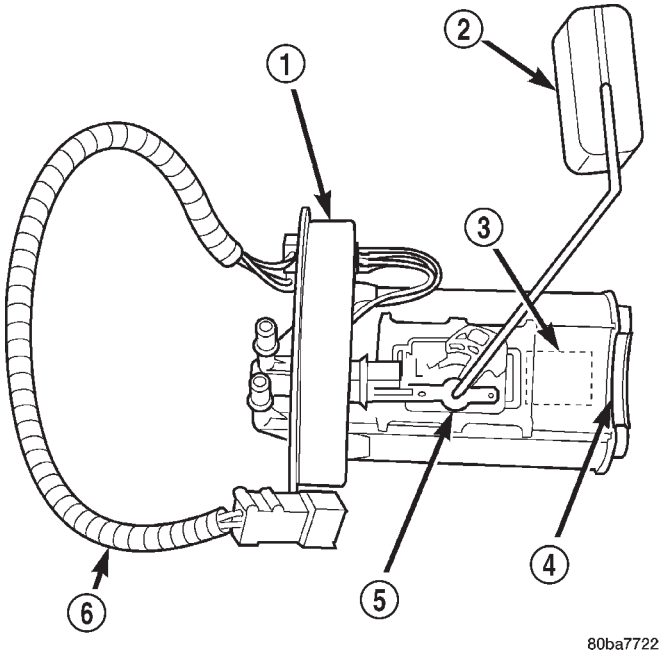

Fig. 6 Fuel Gauge Sending Unit Location

1 - FUEL PUMP MODULE
2 - FUEL GAUGE FLOAT
3 - ELECTRIC FUEL PUMP
4 - INLET FILTER
5 - FUEL GAUGE SENDING UNIT
6 - PIGTAIL HARNESS

(1) Remove fuel tank. Refer to Fuel Tank Removal/Installation.

(2) Remove fuel pump module. Refer to Fuel Pump Module Removal/Installation.

(3) Remove electrical wire connector at sending unit terminals.

(4) Press upward on release tab (Fig. 7) to remove sending unit from pump module.

INSTALLATION

The fuel gauge sending unit (fuel level sensor) and float assembly is located on the side of fuel pump module (Fig. 6). The fuel pump module is located within the fuel tank.

(1) Position sending unit to pump module and snap into place.

(2) Connect electrical connector to terminals.

(3) Install fuel pump module. Refer to Fuel Pump Module Removal/Installation.

(4) Install fuel tank. Refer to Fuel Tank Removal/Installation.

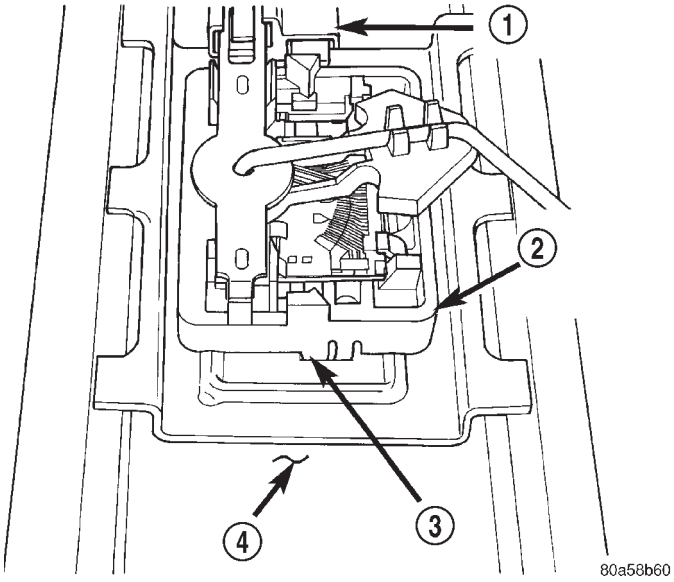

Fig. 7 Fuel Gauge Sending Unit Release Tab

1 - ELECTRICAL CONNECTOR
2 - FUEL GAUGE SENDING UNIT
3 - RELEASE TAB
4 - FUEL PUMP MODULE

FUEL LINES

DESCRIPTION

Also refer to Quick-Connect Fittings.

WARNING: THE FUEL SYSTEM IS UNDER A CONSTANT PRESSURE (EVEN WITH THE ENGINE OFF). BEFORE SERVICING ANY FUEL SYSTEM HOSES, FITTINGS OR LINES, THE FUEL SYSTEM PRESSURE MUST BE RELEASED. REFER TO THE FUEL SYSTEM PRESSURE RELEASE PROCEDURE IN THIS GROUP.

The lines/tubes/hoses used on fuel injected vehicles are of a special construction. This is due to the higher fuel pressures and the possibility of contaminated fuel in this system. If it is necessary to replace these lines/tubes/hoses, only those marked EFM/EFI may be used.

If equipped: The hose clamps used to secure rubber hoses on fuel injected vehicles are of a special rolled edge construction. This construction is used to prevent the edge of the clamp from cutting into the hose. Only these rolled edge type clamps may be used in this system. All other types of clamps may cut into the hoses and cause high-pressure fuel leaks.

Use new original equipment type hose clamps.

FUEL PUMP

DESCRIPTION

The fuel pump is located inside of the fuel pump module. A 12 volt, permanent magnet, electric motor powers the fuel pump.

OPERATION

Voltage to operate the electric pump is supplied through the fuel pump relay.

Fuel is drawn in through a filter at the bottom of the module and pushed through the electric motor gearset to the pump outlet.

Check Valve Operation: The pump outlet contains a one-way check valve to prevent fuel flow back into the tank and to maintain fuel supply line pressure (engine warm) when pump is not operational. It is also used to keep the fuel supply line full of gasoline when pump is not operational. After the vehicle has cooled down, fuel pressure may drop to 0 psi (cold fluid contracts), but liquid gasoline will remain in fuel supply line between the check valve and fuel injectors. **Fuel pressure that has dropped to 0 psi on a cooled down vehicle (engine off) is a normal condition.** Refer to the Fuel Pressure Leak Down Test for more information.

DIAGNOSIS AND TESTING - FUEL PUMP CAPACITY TEST

Before performing this test, verify fuel pump pressure. Refer to Fuel Pump Pressure Test. Use this test in conjunction with the Fuel Pressure Leak Down Test.

(1) Release fuel system pressure. Refer to Fuel Pressure Release Procedure.

(2) Disconnect fuel supply line at fuel rail. Refer to Quick-Connect Fittings. Some engines may require air cleaner housing removal before line disconnection.

(3) Obtain correct Fuel Line Pressure Test Adapter Tool Hose. Tool number 6539 is used for 5/16” fuel lines and tool number 6631 is used for 3/8” fuel lines.

(4) Connect correct Fuel Line Pressure Test Adapter Tool Hose into disconnected fuel supply line. Insert other end of Adaptor Tool Hose into a graduated container.

(5) Remove fuel fill cap.

(6) To activate fuel pump and pressurize system, obtain DRB® scan tool and actuate ASD Fuel System Test.

(7) A good fuel pump will deliver at least 1/4 liter of fuel in 7 seconds. Do not operate fuel pump for longer than 7 seconds with fuel line disconnected as fuel pump module reservoir may run empty.

(a) If capacity is lower than specification, but fuel pump can be heard operating through fuel fill cap opening, check for a kinked/damaged fuel supply line somewhere between fuel rail and fuel pump module.

(b) If line is not kinked/damaged, and fuel pressure is OK, but capacity is low, replace fuel filter/fuel pressure regulator. The filter/regulator may be serviced separately on certain applications. Refer to Fuel Filter/Fuel Pressure Regulator Removal/Installation for additional information.

(c) If both fuel pressure and capacity are low, replace fuel pump module assembly. Refer to Fuel Pump Module Removal/Installation.

DIAGNOSIS AND TESTING - FUEL PUMP AMPERAGE TEST

This amperage (current draw) test is to be done in conjunction with the Fuel Pump Pressure Test, Fuel Pump Capacity Test and Fuel Pressure Leak Down Test. Before performing the amperage test, be sure the temperature of the fuel tank is above 50° F (10° C).

The DRB® Scan Tool along with the DRB Low Current Shunt (LCS) adapter (Fig. 8) and its test leads will be used to check fuel pump amperage specifications.

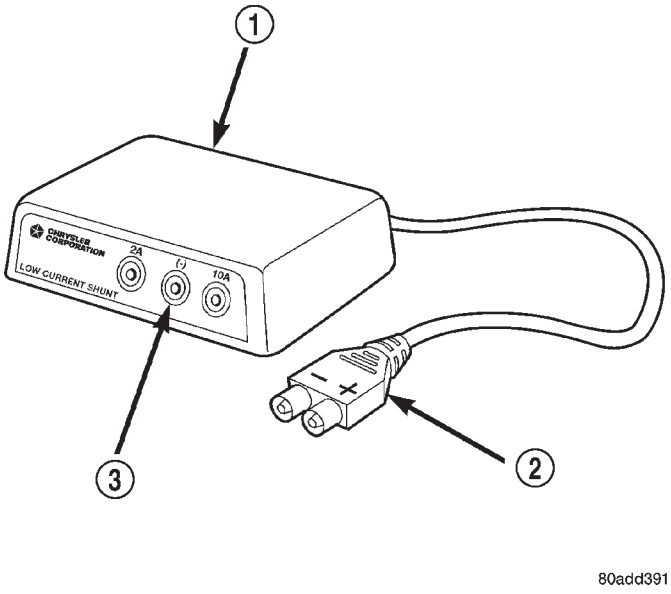

Fig. 8 Low Current Shunt

1 - LOW CURRENT SHUNT ADAPTER
2 - PLUG TO DRB
3 - TEST LEAD RECEPTACLES

(1) Be sure fuel tank contains fuel before starting test. If tank is empty or near empty, amperage readings will be incorrect.

(2) Obtain LCS adapter.

(3) Plug cable from LCS adapter into DRB scan tool at SET 1 receptacle.

FUEL PUMP (Continued)

(4) Plug DRB into vehicle 16–way connector (data link connector).

(5) Connect (-) and (+) test cable leads into LCS adapter receptacles. Use **10 amp (10A +)** receptacle and common (-) receptacles.

(6) Gain access to MAIN MENU on DRB screen.

(7) Press DVOM button on DRB.

(8) Using left/right arrow keys, highlight CHANNEL 1 function on DRB screen.

(9) Press ENTER three times.

(10) Using up/down arrow keys, highlight RANGE on DRB screen (screen will default to 2 amp scale).

(11) Press ENTER to change 2 amp scale to 10 amp scale. **This step must be done to prevent damage to DRB scan tool or LCS adapter (blown fuse).**

(12) Remove cover from Power Distribution Center (PDC).

(13) Remove fuel pump relay from PDC. Refer to label on PDC cover for relay location.

WARNING: BEFORE PROCEEDING TO NEXT STEP, NOTE THE FUEL PUMP WILL BE ACTIVATED AND SYSTEM PRESSURE WILL BE PRESENT. THIS WILL OCCUR AFTER CONNECTING TEST LEADS FROM LCS ADAPTER INTO FUEL PUMP RELAY CAVITIES. THE FUEL PUMP WILL OPERATE EVEN WITH IGNITION KEY IN OFF POSITION. BEFORE ATTACHING TEST LEADS, BE SURE ALL FUEL LINES AND FUEL SYSTEM COMPONENTS ARE CONNECTED.

CAUTION: To prevent possible damage to the vehicle electrical system and LCS adapter, the test leads must be connected into relay cavities exactly as shown in following steps.

Depending upon vehicle model, year or engine configuration, three different types of relays may be used: Type-1, type-2 and type–3.

(14) If equipped with **type–1 relay** (Fig. 9), attach test leads from LCS adapter into PDC relay cavities number 30 and 87. For location of these cavities, refer to numbers stamped to bottom of relay (Fig. 9).

(15) If equipped with **type–2 relay** (Fig. 10), attach test leads from LCS adapter into PDC relay cavities number 30 and 87. For location of these cavities, refer to numbers stamped to bottom of relay (Fig. 10).

(16) If equipped with **type–3 relay** (Fig. 11), attach test leads from LCS adapter into PDC relay cavities number 3 and 5. For location of these cavities, refer to numbers stamped to bottom of relay (Fig. 11).

(17) When LCS adapter test leads are attached into relay cavities, fuel pump **will be activated.** Determine fuel pump amperage on DRB screen.

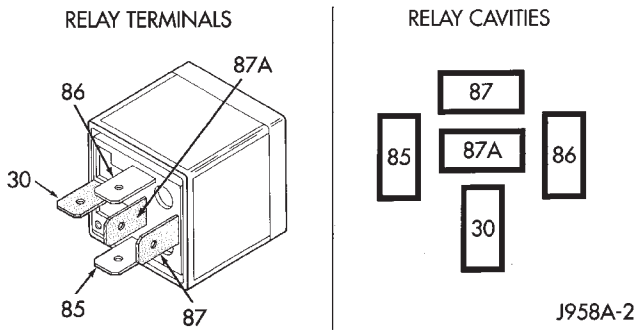

Fig. 9 FUEL PUMP RELAY - TYPE 1

TERMINAL LEGEND	
NUMBER	IDENTIFICATION
30	COMMON FEED
85	COIL GROUND
86	COIL BATTERY
87	NORMALLY OPEN
87A	NORMALLY CLOSED

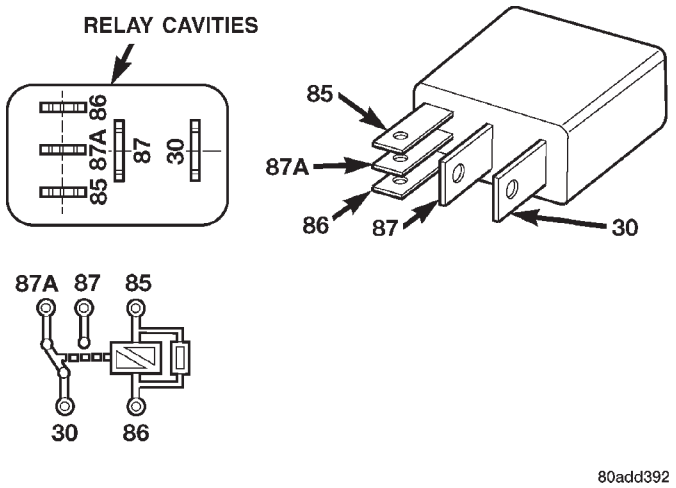

Fig. 10 FUEL PUMP RELAY - TYPE 2

TERMINAL LEGEND	
NUMBER	IDENTIFICATION
30	COMMON FEED
85	COIL GROUND
86	COIL BATTERY
87	NORMALLY OPEN
87A	NORMALLY CLOSED

Amperage should be below 10.0 amps. If amperage is below 10.0 amps, and specifications for the Fuel Pump Pressure, Fuel Pump Capacity and Fuel Pres-

FUEL PUMP (Continued)

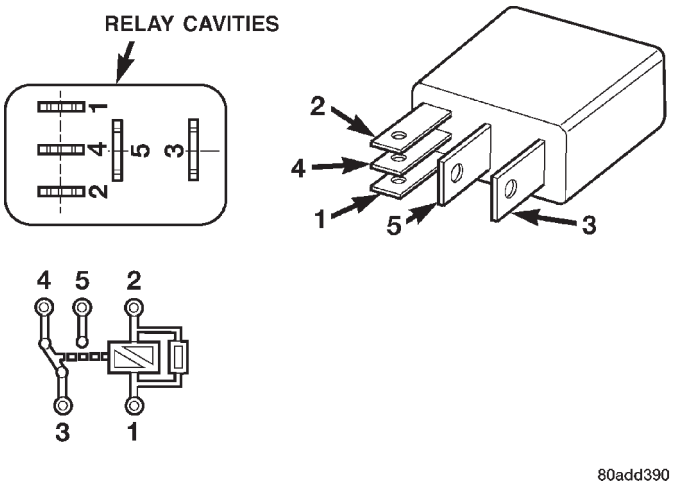

Fig. 11 FUEL PUMP RELAY - TYPE 3

TERMINAL LEGEND	
NUMBER	IDENTIFICATION
1	COIL BATTERY
2	COIL GROUND
3	COMMON FEED
4	NORMALLY CLOSED
5	NORMALLY OPEN

sure Leak Down tests were met, the fuel pump module is OK.

(18) If amperage is more than 10.0 amps, replace fuel pump module assembly. The electric fuel pump is not serviced separately.

(19) Disconnect test leads from relay cavities immediately after testing.

DIAGNOSIS AND TESTING - FUEL PUMP PRESSURE TEST

Use this test in conjunction with other fuel system tests. Refer to the Fuel Pump Capacity Test, Fuel Pressure Leak Down Test and Fuel Pump Amperage Test.

Check Valve Operation: The electric fuel pump outlet contains a one-way check valve to prevent fuel flow back into the tank and to maintain fuel supply line pressure (engine warm) when pump is not operational. It is also used to keep the fuel supply line full of gasoline when pump is not operational. After the vehicle has cooled down, fuel pressure may drop to 0 psi (cold fluid contracts), but liquid gasoline will remain in fuel supply line between the check valve and fuel injectors. **Fuel pressure that has dropped to 0 psi on a cooled down vehicle (engine off) is a normal condition.** When the electric fuel pump is activated, fuel pressure should **immediately** (1–2 seconds) rise to specification.

The fuel system is equipped with a combination fuel filter/fuel pressure regulator. The fuel pressure regulator is not controlled by engine vacuum.

WARNING: THE FUEL SYSTEM IS UNDER CONSTANT FUEL PRESSURE EVEN WITH THE ENGINE OFF. BEFORE DISCONNECTING FUEL LINE AT FUEL RAIL, THIS PRESSURE MUST BE RELEASED. REFER TO THE FUEL SYSTEM PRESSURE RELEASE PROCEDURE.

(1) Remove pressure test port cap at fuel rail test port (Fig. 12) or (Fig. 13). Connect 0–414 kPa (0-60 psi) fuel pressure gauge (from gauge set 5069) to test port pressure fitting on fuel rail (Fig. 14). **The DRB III Scan Tool along with the PEP module, the 500 psi pressure transducer, and the transducer-to-test port adapter may also be used in place of the fuel pressure gauge.**

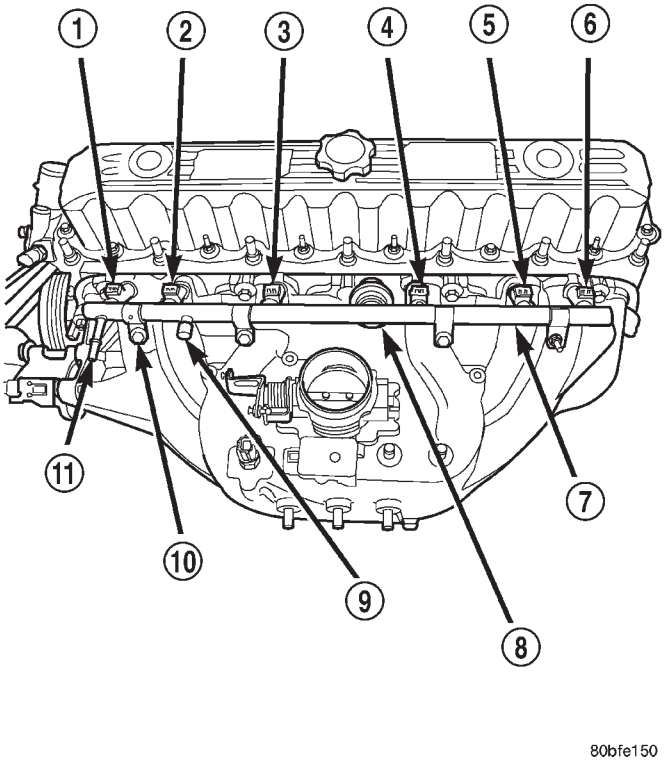

Fig. 12 Test Port Cap Location—4.0L Engine

1 - INJ. #1
2 - INJ. #2
3 - INJ. #3
4 - INJ. #4
5 - INJ. #5
6 - INJ. #6
7 - FUEL INJECTOR RAIL
8 - FUEL DAMPER
9 - PRESSURE TEST PORT CAP
10 - MOUNTING BOLTS (4)
11 - QUICK-CONNECT FITTING

(2) Start and warm engine and note pressure gauge reading. The DRB scan tool may also be used to power fuel pump. Fuel pressure should be 339 kPa ± 34 kPa (49.2 psi ± 5 psi) at idle.

FUEL PUMP (Continued)

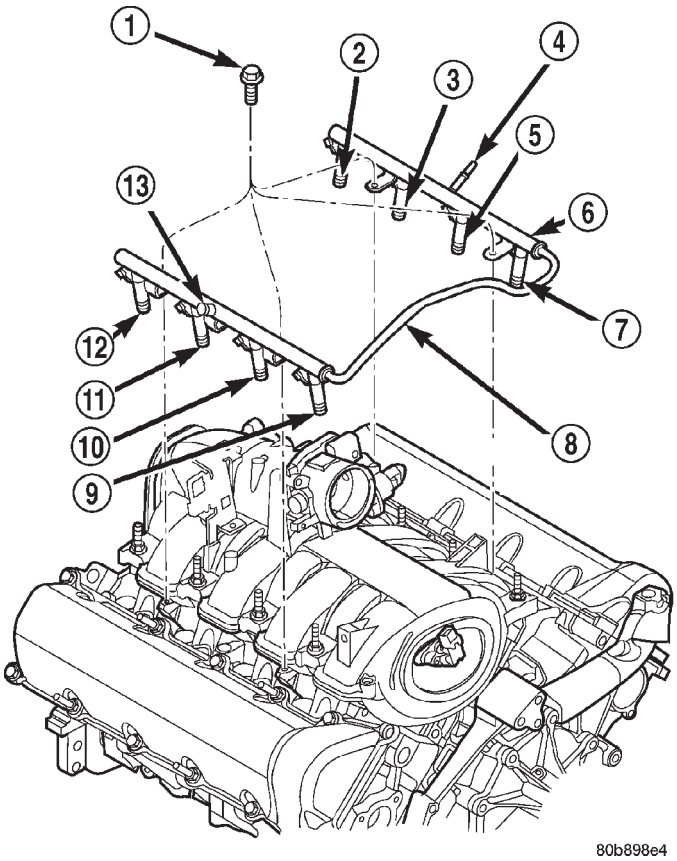

Fig. 13 Test Port Cap Location—4.7L V-8 Engine

1 - MOUNTING BOLTS (4)
2 - INJ.#7
3 - INJ.#5
4 - QUICK-CONNECT FITTING
5 - INJ.#3
6 - FUEL INJECTOR RAIL
7 - INJ.#1
8 - CONNECTOR TUBE
9 - INJ.#2
10 - INJ.#4
11 - INJ.#6
12 - INJ.#8
13 - PRESSURE TEST PORT CAP

(3) If engine runs, but pressure is below 44.2 psi, determine if fuel pump or filter/regulator is defective. Proceed to next step:

(a) Check for a kinked fuel supply line somewhere between fuel rail and fuel pump module.

(b) If line is not kinked and pressure is low, raise vehicle and disconnect fuel pressure line at fuel filter/fuel pressure regulator (Fig. 15). Three fuel lines are attached to filter/regulator. The **fuel pressure line** is attached to the right side of filter/regulator. It is also the most rearward of the two (Fig. 15).

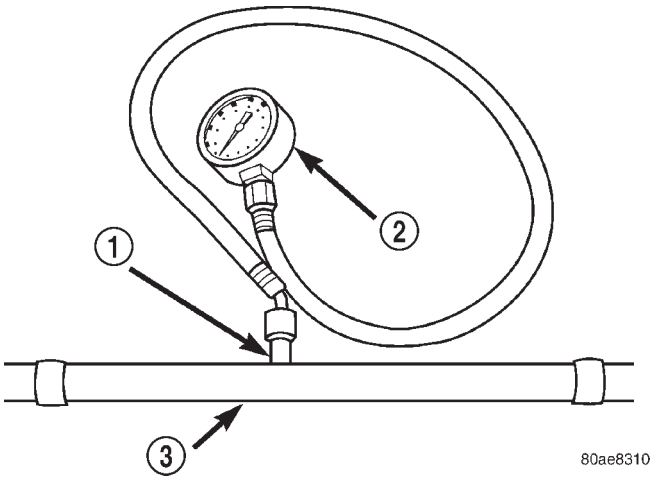

Fig. 14 Fuel Pressure Test Gauge (Typical Gauge Installation at Test Port)

1 - SERVICE (TEST) PORT
2 - FUEL PRESSURE TEST GAUGE
3 - FUEL RAIL

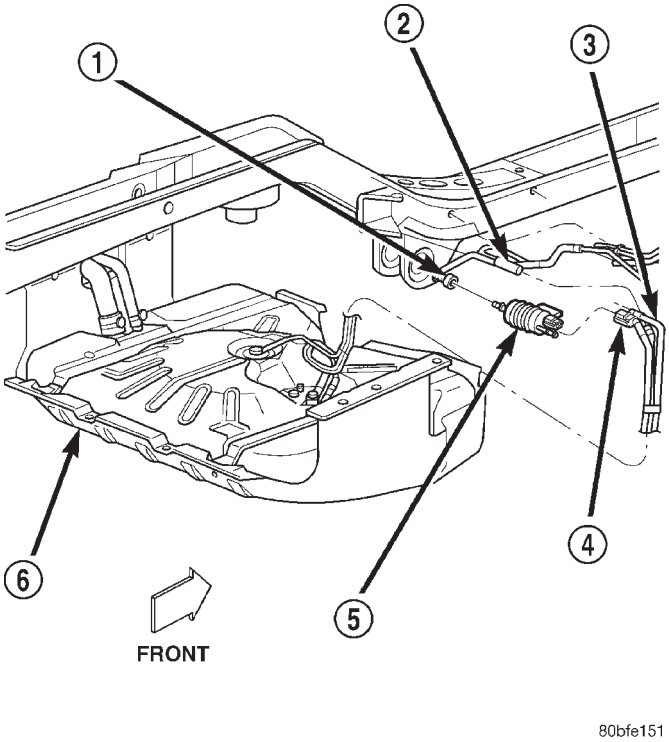

Fig. 15 Fuel Filter/Fuel Pressure Regulator Location

1 - FUEL SUPPLY LINE (TO FUEL RAIL)
2 - EVAP LINE
3 - FUEL RETURN LINE (MALE)
4 - FUEL PRESSURE LINE (FEMALE)
5 - FUEL FILTER/PRESSURE REGULATOR
6 - FUEL TANK

FUEL PUMP (Continued)

(c) Install Special 5/16” Fuel Line Adapter Tool # 6539 between disconnected fuel line and filter/regulator fitting

(d) Attach 0–60 psi fuel pressure test gauge to “T” fitting on tool 6539.

(e) Use DRB scan tool to power fuel pump. If pressure is now within specifications, replace fuel filter/fuel pressure regulator.

(f) If pressure is still low, replace fuel pump module.

(4) If operating pressure is above 54.2 psi, electric fuel pump is OK, but fuel pressure regulator is defective. Replace fuel filter/fuel pressure regulator.

(5) Install test port cap to fuel rail test port.

FUEL PUMP MODULE

DESCRIPTION

The fuel pump module is installed in the top of the fuel tank (Fig. 16). The fuel pump module (Fig. 17) contains the following components:

- A separate fuel pick-up filter (strainer)
- An electric fuel pump
- A threaded locknut to retain module to tank
- A gasket between tank flange and module
- Fuel gauge sending unit (fuel level sensor)
- Fuel supply tube (line) connection
- Fuel return tube (line) connection

The fuel gauge sending unit and pick-up filter may be serviced separately. If the electrical fuel pump requires service, the entire fuel pump module must be replaced.

OPERATION

Refer to Fuel Pump, Fuel Filter/Fuel Pressure Regulator and Fuel Gauge Sending Unit.

REMOVAL

Fuel tank removal will be necessary for fuel pump module removal.

WARNING: THE FUEL SYSTEM IS UNDER A CONSTANT PRESSURE (EVEN WITH THE ENGINE OFF). BEFORE SERVICING FUEL PUMP MODULE, FUEL SYSTEM PRESSURE MUST BE RELEASED.

(1) Perform Fuel System Pressure Release Procedure.

(2) Drain fuel tank and remove tank. Refer to Fuel Tank Removal/Installation.

(3) Thoroughly wash and clean area around pump module to prevent contaminants from entering tank.

(4) Disconnect fuel return and pressure lines from fuel pump module fittings (Fig. 18). Refer to Quick-Connect Fittings for procedures.

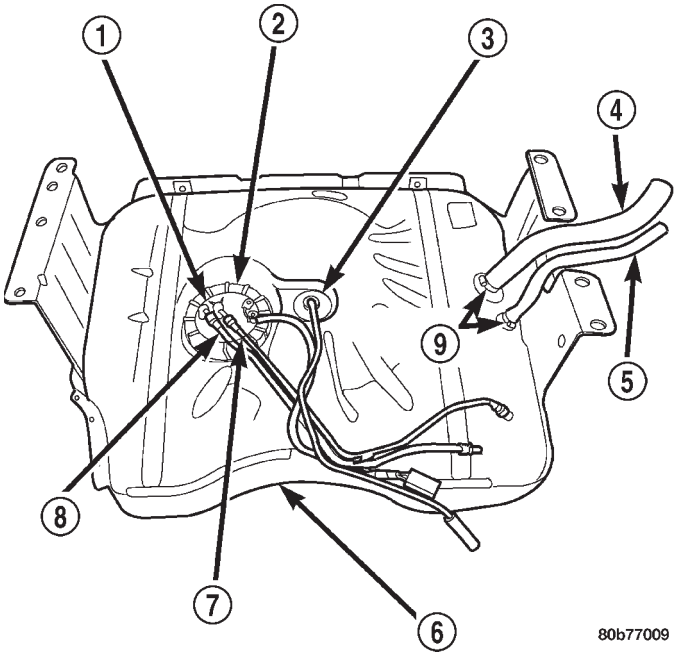

Fig. 16 Fuel Tank/Fuel Pump Module Location

1 - FUEL PUMP MODULE
2 - LOCKNUT
3 - ROLL OVER VALVE
4 - FUEL FILL HOSE
5 - FUEL VENT HOSE
6 - FUEL TANK
7 - FUEL SUPPLY (PRESSURE) LINE
8 - FUEL RETURN LINE
9 - CLAMPS

(5) The plastic fuel pump module locknut is threaded onto fuel tank (Fig. 18). Install Special Tool 6856 to fuel pump module locknut and remove locknut (Fig. 19). The fuel pump module will spring up slightly after locknut is removed.

(6) Remove module from fuel tank.

INSTALLATION

Fuel tank removal will be necessary for fuel pump module removal.

CAUTION: Whenever fuel pump module is serviced, module gasket must be replaced.

(1) Thoroughly clean locknut threads and mating fuel tank threads. Use a soap/water solution. Do not use carburetor cleaner to clean threads.

(2) Using new gasket, position fuel pump module into opening in fuel tank.

(3) Apply clean water to locknut threads.

(4) Position locknut over top of fuel pump module.

(5) Rotate module until indexing arrow at top of module (Fig. 20)is pointed toward rear of vehicle. Align arrow to tick mark on top of fuel tank. **This**

FUEL PUMP MODULE (Continued)

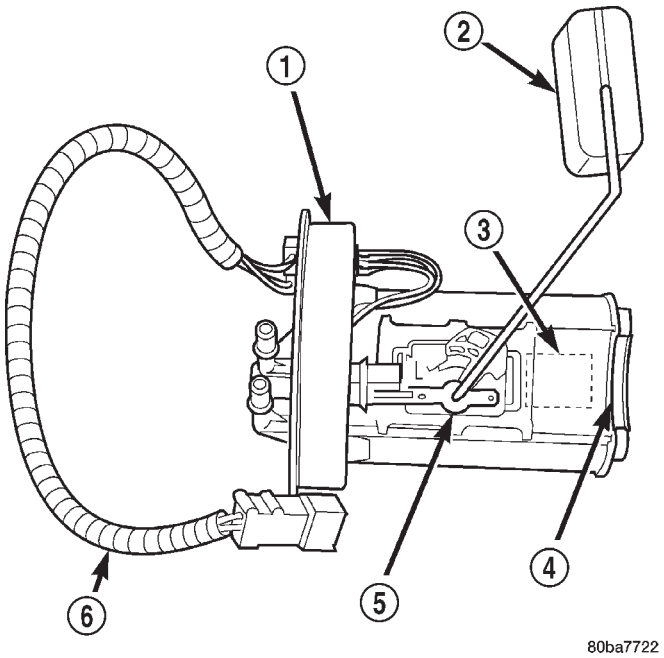

Fig. 17 Fuel Pump Module

1 - FUEL PUMP MODULE
2 - FUEL GAUGE FLOAT
3 - ELECTRIC FUEL PUMP
4 - INLET FILTER
5 - FUEL GAUGE SENDING UNIT
6 - PIGTAIL HARNESS

step must be done to prevent float/float rod assembly from contacting sides of fuel tank.

(6) Install Special Tool 6856 to locknut.

(7) Tighten locknut to 74 N·m (55 ft. lbs.) torque.

(8) Connect fuel return and pressure lines to fuel pump module fittings (Fig. 18). Refer to Quick-Connect Fittings.

(9) Install fuel tank. Refer to Fuel Tank Installation.

FUEL RAIL

DESCRIPTION - 4.7L

The fuel injector rail is used to mount the fuel injectors to the engine. It is mounted to the intake manifold (Fig. 21).

DESCRIPTION - 4.0L

The fuel injector rail is used to mount the fuel injectors to the engine (Fig. 22). On the 4.0L 6–cylinder engine, a **fuel damper** is located near the center of the fuel rail (Fig. 22).

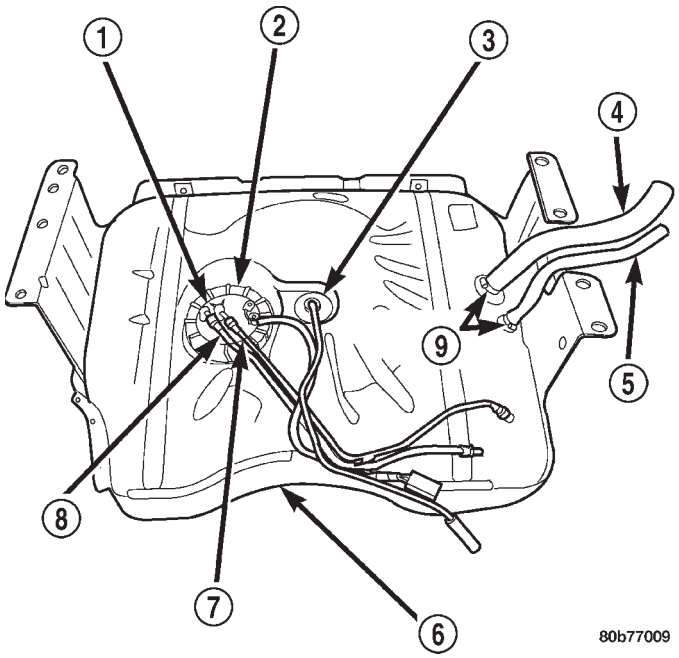

Fig. 18 Top View of Fuel Tank and Fuel Pump Module

1 - FUEL PUMP MODULE
2 - LOCKNUT
3 - ROLL OVER VALVE
4 - FUEL FILL HOSE
5 - FUEL VENT HOSE
6 - FUEL TANK
7 - FUEL SUPPLY (PRESSURE) LINE
8 - FUEL RETURN LINE
9 - CLAMPS

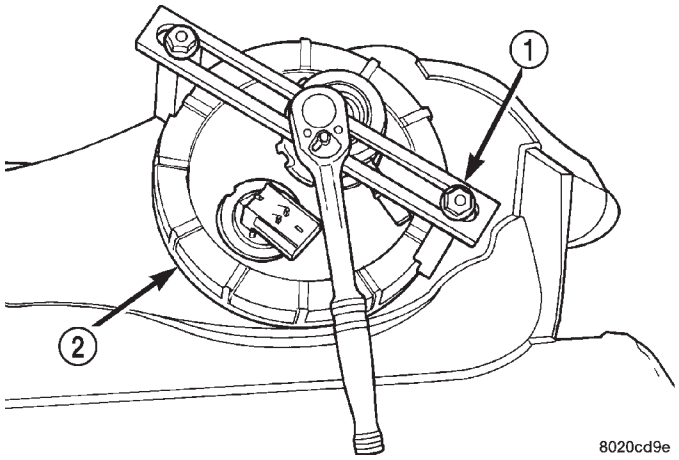

Fig. 19 Locknut Removal/Installation—TYPICAL

1 - SPECIAL TOOL 6856
2 - LOCKNUT

FUEL RAIL (Continued)

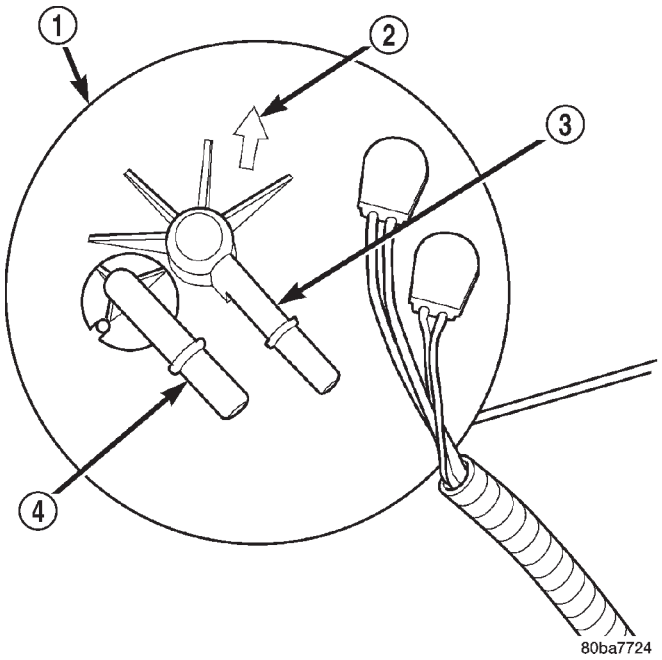

Fig. 20 Fuel Pump Module Indexing Arrow

1 - FUEL PUMP MODULE
2 - INDEXING ARROW
3 - FUEL SUPPLY (PRESSURE) FITTING
4 - FUEL RETURN FITTING

OPERATION - 4.7L

High pressure fuel from the fuel pump is routed to the fuel rail. The fuel rail then supplies the necessary fuel to each individual fuel injector.

A fuel pressure test port is located on the fuel rail (Fig. 21). A quick-connect fitting with a safety latch is used to attach the fuel line to the fuel rail.

The fuel rail is not repairable.

OPERATION - 4.0L

The fuel injector rail supplies the necessary fuel to each individual fuel injector.

High pressure fuel from the fuel pump is routed to the fuel rail. The fuel rail then supplies the necessary fuel to each individual fuel injector.

The fuel damper is used only to help control fuel pressure pulsations. These pulsations are the result of the firing of the fuel injectors. It is **not used** as a fuel pressure regulator. The fuel pressure regulator is **not mounted** to the fuel rail on any engine. It is located near the front of the fuel tank above the rear axle. Refer to Fuel Filter/Fuel Pressure Regulator in this group for information.

A fuel pressure test port is located on the fuel rail (Fig. 22). A quick-connect fitting with a safety latch is used to attach the fuel line to the fuel rail.

The fuel rail is not repairable.

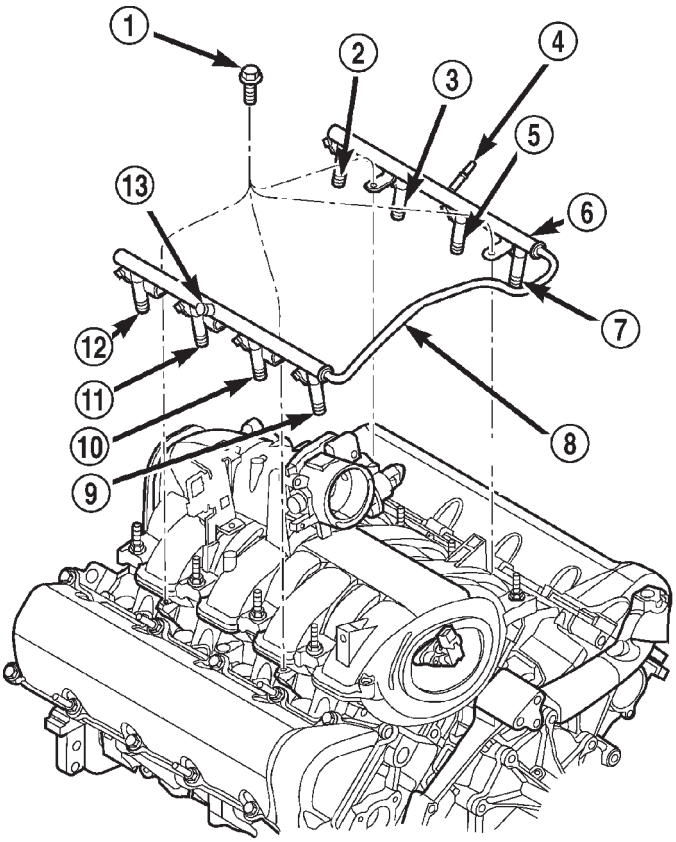

Fig. 21 Fuel Injector Rail—4.7L V-8 Engine

1 - MOUNTING BOLTS (4)
2 - INJ.#7
3 - INJ.#5
4 - QUICK-CONNECT FITTING
5 - INJ.#3
6 - FUEL INJECTOR RAIL
7 - INJ.#1
8 - CONNECTOR TUBE
9 - INJ.#2
10 - INJ.#4
11 - INJ.#6
12 - INJ.#8
13 - PRESSURE TEST PORT CAP

REMOVAL - 4.7L

WARNING: THE FUEL SYSTEM IS UNDER CONSTANT PRESSURE EVEN WITH ENGINE OFF. BEFORE SERVICING FUEL RAIL, FUEL SYSTEM PRESSURE MUST BE RELEASED.

CAUTION: The left and right fuel rails are replaced as an assembly. Do not attempt to separate rail halves at connector tube (Fig. 23). Due to design of tube, it does not use any clamps. Never attempt to install a clamping device of any kind to tube. When removing fuel rail assembly for any reason, be careful not to bend or kink tube.

FUEL RAIL (Continued)

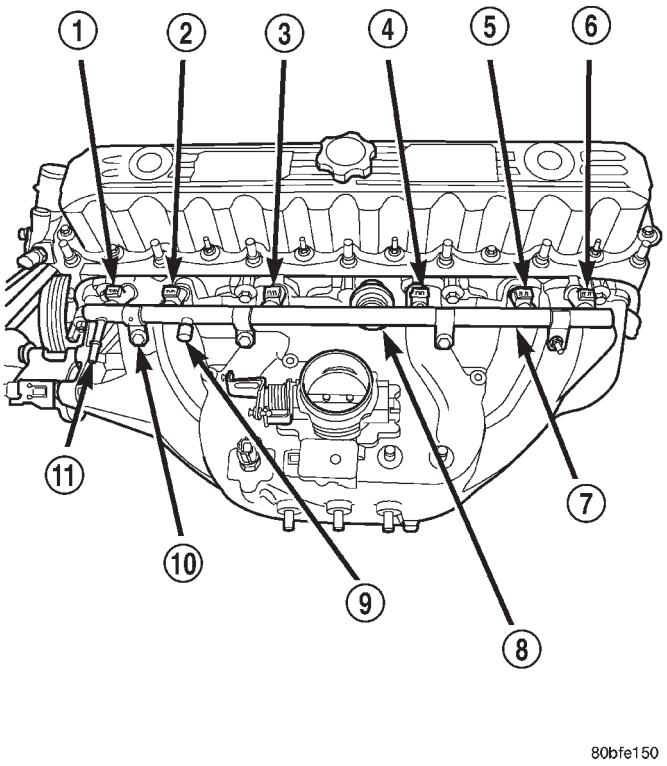

Fig. 22 Fuel Injector Rail/Fuel Damper—4.0L Engine

1 - INJ. #1
2 - INJ. #2
3 - INJ. #3
4 - INJ. #4
5 - INJ. #5
6 - INJ. #6
7 - FUEL INJECTOR RAIL
8 - FUEL DAMPER
9 - PRESSURE TEST PORT CAP
10 - MOUNTING BOLTS (4)
11 - QUICK-CONNECT FITTING

(1) Remove fuel tank filler tube cap.

(2) Perform Fuel System Pressure Release Procedure.

(3) Remove negative battery cable at battery.

(4) Remove air duct at throttle body air box.

(5) Remove air box at throttle body.

(6) Remove wiring at rear of generator.

(7) Disconnect fuel line latch clip and fuel line at fuel rail. A special tool will be necessary for fuel line disconnection. Refer to Quick-Connect Fittings.

(8) Remove vacuum lines at throttle body.

(9) Disconnect electrical connectors at all 8 fuel injectors. To remove connector refer to (Fig. 24). Push red colored slider away from injector (1). While pushing slider, depress tab (2) and remove connector (3) from injector. The factory fuel injection wiring harness is numerically tagged (INJ 1, INJ 2, etc.) for injector position identification. If harness is not tagged, note wiring location before removal.

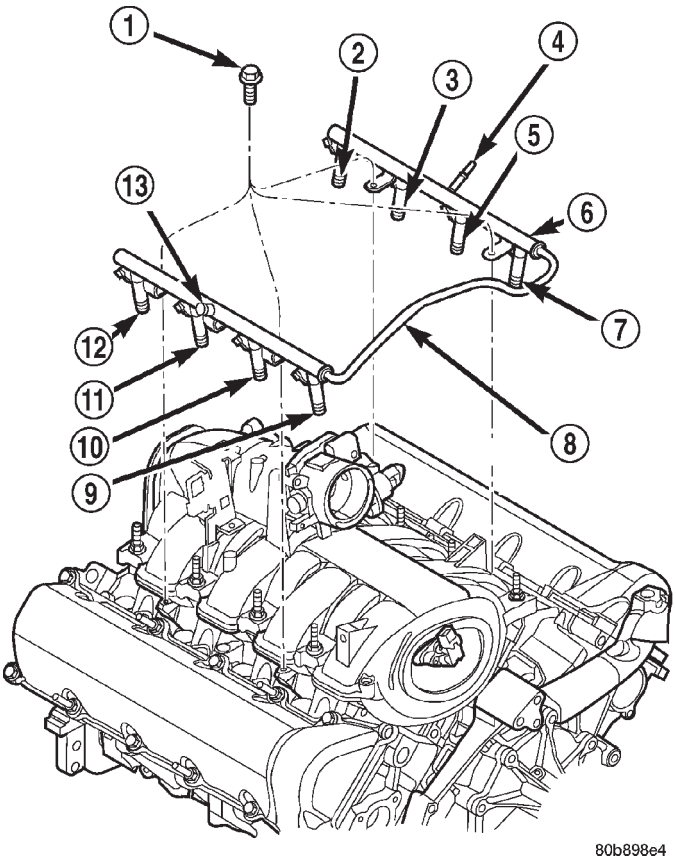

Fig. 23 FUEL INJECTOR RAIL - 4.7L V-8 EN

1 - MOUNTING BOLTS (4)
2 - INJ.#7
3 - INJ.#5
4 - QUICK-CONNECT FITTING
5 - INJ.#3
6 - FUEL INJECTOR RAIL
7 - INJ.#1
8 - CONNECTOR TUBE
9 - INJ.#2
10 - INJ.#4
11 - INJ.#6
12 - INJ.#8
13 - PRESSURE TEST PORT CAP

(10) Disconnect electrical connectors at throttle body.

(11) Disconnect electrical connectors at MAP and IAT sensors.

(12) Remove first three ignition coils on each bank (cylinders #1, 3, 5, 2, 4 and 6). Refer to Ignition Coil Removal/Installation.

(13) Remove 4 fuel rail mounting bolts (Fig. 23).

(14) Gently rock and pull **left** side of fuel rail until fuel injectors just start to clear machined holes in cylinder head. Gently rock and pull **right** side of rail until injectors just start to clear cylinder head holes. Repeat this procedure (left/right) until all injectors have cleared cylinder head holes.

FUEL RAIL (Continued)

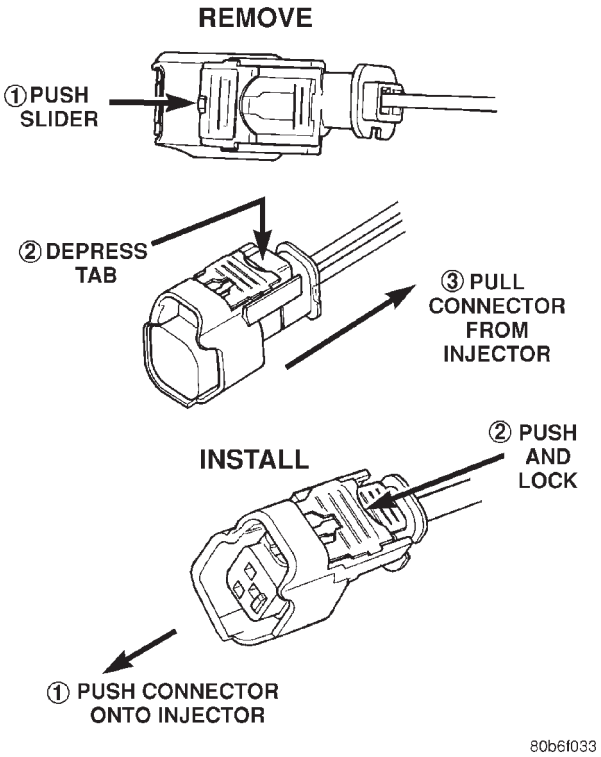

Fig. 24 Remove/Install Injector Connector—4.7L V-8 Engine

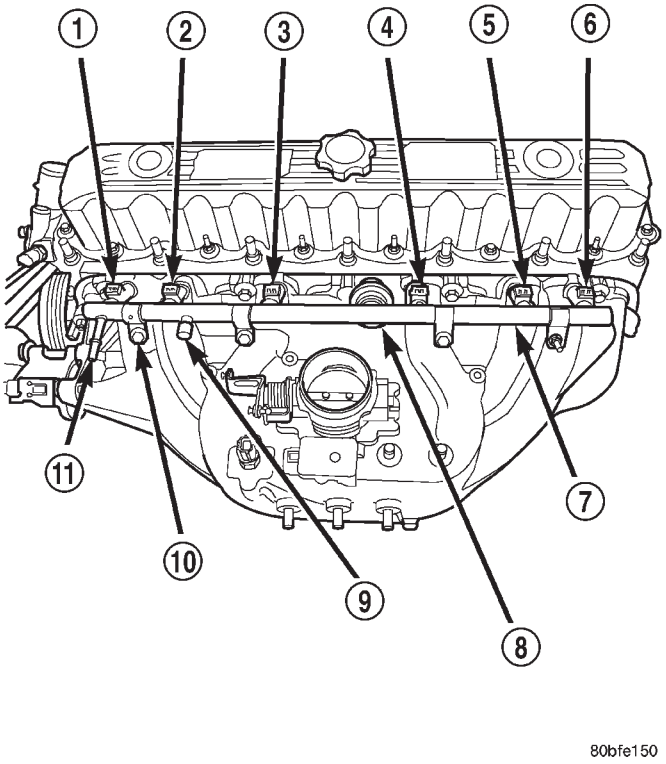

Fig. 25 Fuel Rail Mounting—4.0L Engine

1 - INJ. #1
2 - INJ. #2
3 - INJ. #3
4 - INJ. #4
5 - INJ. #5
6 - INJ. #6
7 - FUEL INJECTOR RAIL
8 - FUEL DAMPER
9 - PRESSURE TEST PORT CAP
10 - MOUNTING BOLTS (4)
11 - QUICK-CONNECT FITTING

(15) Remove fuel rail (with injectors attached) from engine.

(16) If fuel injectors are to be removed, refer to Fuel Injector Removal/Installation.

REMOVAL - 4.0L

The fuel damper is not serviced separately.

WARNING: THE FUEL SYSTEM IS UNDER CONSTANT FUEL PRESSURE EVEN WITH ENGINE OFF. THIS PRESSURE MUST BE RELEASED BEFORE SERVICING FUEL RAIL.

(1) Remove fuel tank filler tube cap.

(2) Perform Fuel System Pressure Release Procedure.

(3) Disconnect negative battery cable from battery.

(4) Remove air tube at top of throttle body. Note: Some engine/vehicles may require removal of air cleaner ducts at throttle body.

(5) Disconnect electrical connectors at all 6 fuel injectors. To remove connector refer to (Fig. 26). Push red colored slider away from injector (1). While pushing slider, depress tab (2) and remove connector (3) from injector. The factory fuel injection wiring harness is numerically tagged (INJ 1, INJ 2, etc.) for injector position identification. If harness is not tagged, note wiring location before removal.

(6) Remove oxygen sensor wiring clip nuts at fuel rail mounting studs (certain emissions packages only).

(7) Disconnect fuel supply line latch clip and fuel line at fuel rail. Refer to Quick-Connect Fittings.

(8) Disconnect throttle cable at throttle body. Refer to Throttle Cable Removal/Installation.

(9) Disconnect speed control cable at throttle body (if equipped). Refer to Speed Control Cable.

(10) Disconnect automatic transmission cable at throttle body (if equipped).

(11) Remove cable routing bracket at intake manifold.

(12) Clean dirt/debris from each fuel injector at intake manifold.

(13) Remove fuel rail mounting nuts/bolts (Fig. 25).

FUEL RAIL (Continued)

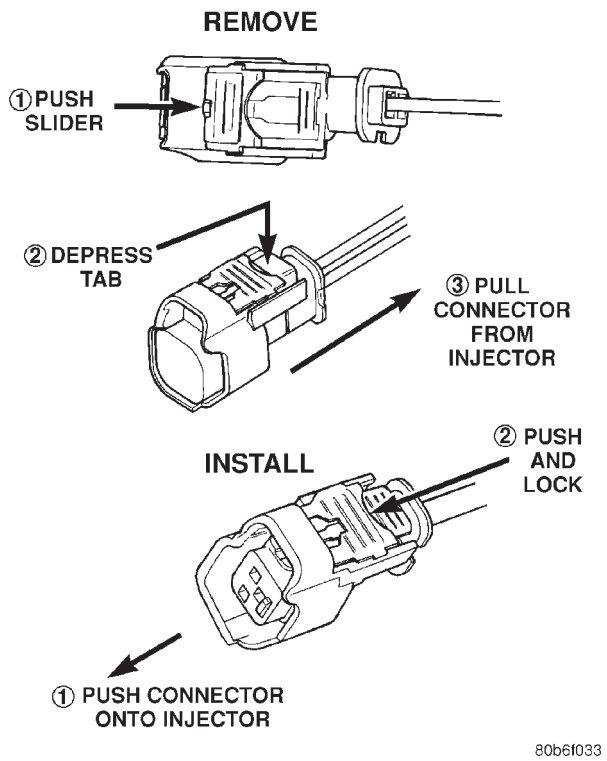

Fig. 26 Remove/Install Injector Connector—4.0L Engine

(14) Remove fuel rail by gently rocking until all fuel injectors have cleared machined holes at intake manifold.

(15) If fuel injectors are to be removed, refer to Fuel Injector Removal/Installation.

INSTALLATION - 4.7L

(1) If fuel injectors are to be installed, refer to Fuel Injector Removal/Installation.

(2) Apply a small amount of engine oil to each fuel injector o-ring. This will help in fuel rail installation.

(3) Position fuel rail/fuel injector assembly to machined injector openings in cylinder head.

(4) Guide each injector into cylinder head. Be careful not to tear injector o-rings.

(5) Push **right** side of fuel rail down until fuel injectors have bottomed on cylinder head shoulder. Push **left** fuel rail down until injectors have bottomed on cylinder head shoulder.

(6) Install 4 fuel rail mounting bolts and tighten to 27 N·m (20 ft. lbs.).

(7) Install ignition coils. Refer to Ignition Coil Removal/Installation.

(8) Connect electrical connectors to throttle body.

(9) Connect electrical connectors to MAP and IAT sensors.

(10) Connect electrical connectors at all fuel injectors. To install connector, refer to (Fig. 24). Push connector onto injector (1) and then push and lock red colored slider (2). Verify connector is locked to injector by lightly tugging on connector.

(11) Connect vacuum lines to throttle body.

(12) Connect fuel line latch clip and fuel line to fuel rail. Refer to Quick-Connect Fittings.

(13) Connect wiring to rear of generator.

(14) Install air box to throttle body.

(15) Install air duct to air box.

(16) Connect battery cable to battery.

(17) Start engine and check for leaks.

INSTALLATION - 4.0L

(1) If fuel injectors are to be installed, refer to Fuel Injector Removal/Installation.

(2) Clean each injector bore at intake manifold.

(3) Apply a small amount of clean engine oil to each injector o-ring. This will aid in installation.

(4) Position tips of all fuel injectors into the corresponding injector bore in intake manifold. Seat injectors into manifold.

(5) Install and tighten fuel rail mounting bolts to 11 ±3 N·m (100 ±25 in. lbs.) torque.

(6) Connect electrical connectors at all fuel injectors. To install connector, refer to (Fig. 26). Push connector onto injector (1) and then push and lock red colored slider (2). Verify connector is locked to injector by lightly tugging on connector.

(7) Connect fuel line and fuel line latch clip to fuel rail. Refer Quick-Connect Fittings.

(8) Install protective cap to pressure test port fitting (if equipped).

(9) Install cable routing bracket to intake manifold.

(10) Connect throttle cable at throttle body.

(11) Connect speed control cable at throttle body (if equipped).

(12) Connect automatic transmission cable at throttle body (if equipped).

(13) Install oxygen sensor wiring clip nuts to fuel rail mounting studs (certain emissions packages only).

(14) Install air tube (or duct) at top of throttle body.

(15) Install fuel tank cap.

(16) Connect negative battery cable to battery.

(17) Start engine and check for fuel leaks.

FUEL TANK

DESCRIPTION

The fuel tank is constructed of a plastic material. Its main functions are for fuel storage and for placement of the fuel pump module.

FUEL TANK (Continued)

OPERATION

All models pass a full 360 degree rollover test without fuel leakage. To accomplish this, fuel and vapor flow controls are required for all fuel tank connections.

A rollover valve(s) is mounted into the top of the fuel tank (or pump module). Refer to Rollover Valve for additional information.

An evaporation control system is connected to the rollover valve(s) to reduce emissions of fuel vapors into the atmosphere. When fuel evaporates from the fuel tank, vapors pass through vent hoses or tubes to a charcoal canister where they are temporarily held. When the engine is running, the vapors are drawn into the intake manifold. Certain models are also equipped with a self-diagnosing system using a Leak Detection Pump (LDP). Refer to Emission Control System for additional information.

REMOVAL

WARNING: THE FUEL SYSTEM IS UNDER CONSTANT FUEL PRESSURE EVEN WITH ENGINE OFF. PRESSURE MUST BE RELEASED BEFORE SERVICING FUEL TANK.

Two different procedures may be used to drain fuel tank (through tank vent fitting or using DRB scan tool). The quickest is draining through tank vent fitting.

As an alternative procedure, the electric fuel pump may be activated allowing tank to be drained at fuel rail connection. Refer to DRB scan tool for fuel pump activation procedures. Before disconnecting fuel line at fuel rail, release fuel pressure. Refer to the Fuel System Pressure Release Procedure for procedures. Attach end of Special Adapter Hose Tool number 6539 at fuel rail disconnection. Position opposite end of 6539 to an approved gasoline draining station. Activate fuel pump with DRB and drain tank until empty.

If electric fuel pump is not operating, tank **MUST** be drained through vent fitting.

(1) Release fuel system pressure. Refer to Fuel System Pressure Release Procedure.

(2) Disconnect negative battery cable at battery.

(3) Raise and support vehicle.

(4) Working from front of fuel tank, loosen clamp at fuel **vent** hose at fuel tank end of hose (Fig. 27). Remove hose at tank fitting.

(5) Obtain a length of 3/8” O.D. thinwall, clear tubing.

(6) Position 3/8” O.D. tubing into tank vent fitting. Attach 3/8” tubing to an approved gasoline draining station. Drain tank until empty.

(7) Remove rear tow hooks (if equipped).

(8) Remove optional trailer hitch (if equipped).

(9) Remove fuel tank-to-rear bumper fascia clips (Fig. 28).

(10) Remove fuel tank heat shield mounting bolts (Fig. 29).

CAUTION: To protect fuel tank from exhaust heat, shield must re-installed after tank installation.

WARNING: PLACE SHOP TOWEL AROUND FUEL LINES TO CATCH ANY EXCESS FUEL.

(11) Disconnect fuel return line at fuel filter/fuel pressure regulator (Fig. 30). Refer to Quick-Connect Fittings for procedures.

(12) Disconnect fuel pressure line at fuel filter/fuel pressure regulator (Fig. 30). Refer to Quick-Connect Fittings for procedures.

(13) Disconnect EVAP canister vent line near front of tank (Fig. 30).

(14) Disconnect fuel pump module electrical connector (pigtail harness) near front of tank (Fig. 30). Harness connector is clipped to body.

(15) Cut and discard tie strap supporting rear axle vent hose to tank vent hose (Fig. 31).

(16) Remove clamp on axle vent hose at rear axle.

(17) Remove vent hose from fitting at rear axle.

(18) Loosen fill and vent hose clamps at body (Fig. 31). Disconnect fill and vent hoses at filler tube assembly.

(19) Place hydraulic jack to bottom of fuel tank.

(20) Remove tank-to-frame mounting bolts (Fig. 32).

(21) Carefully lower tank until clear of vehicle. Place tank on floor.

(22) If necessary, remove two fuel tank strap nuts (Fig. 32).

(23) If fuel pump module removal is necessary, refer to Fuel Pump Module Removal/Installation.

(24) If hoses are to be removed at fuel tank end, note painted alignment (indexing) markings on hoses, and molded indexing tangs on tank before removal. Remove hoses.

(25) If necessary, remove 3 fuel filler tube assembly mounting bolts (Fig. 33) and remove fuel filler tube.

FUEL TANK (Continued)

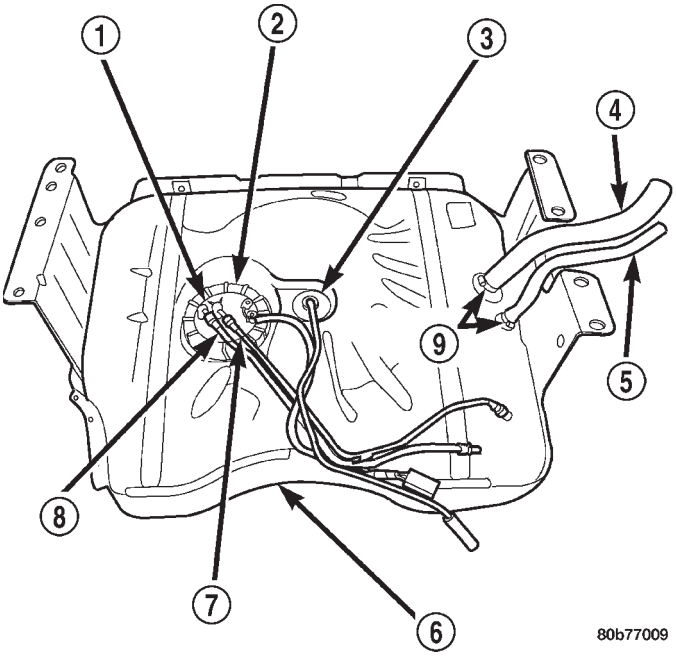

Fig. 27 Fuel Tank Assembly (Top View)

1 - FUEL PUMP MODULE
2 - LOCKNUT
3 - ROLL OVER VALVE
4 - FUEL FILL HOSE
5 - FUEL VENT HOSE
6 - FUEL TANK
7 - FUEL SUPPLY (PRESSURE) LINE
8 - FUEL RETURN LINE
9 - CLAMPS

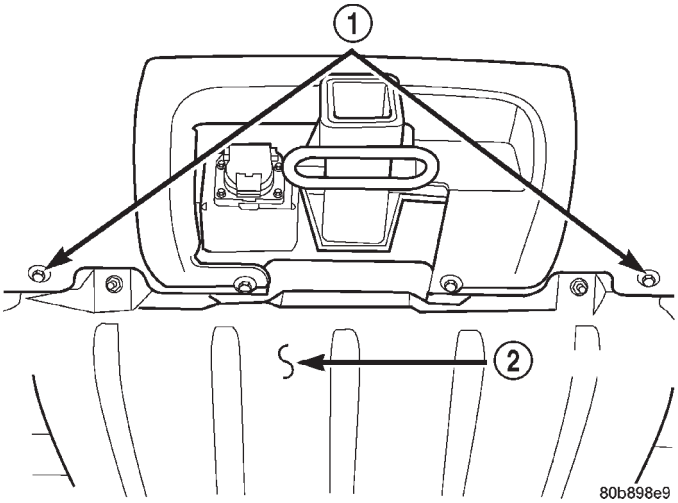

Fig. 28 Fuel Tank-to-Rear Bumper Fascia Clips

1 - CLIPS
2 - FUEL TANK

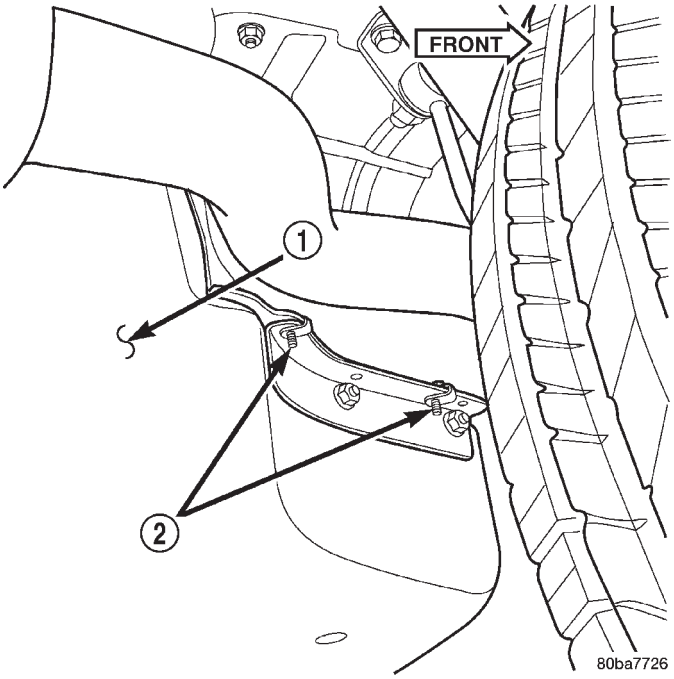

Fig. 29 Fuel Tank Heat Shield Bolts

1 - FUEL TANK
2 - HEAT SHIELD BOLTS

INSTALLATION

(1) If fuel pump module is being installed, refer to Fuel Pump Module Removal/Installation.

(2) If necessary, position fuel filler tube assembly to body. Install 3 bolts and tighten to 2 N·m (15 in. lbs.) torque.

(3) Install fuel fill/vent hoses to tank fittings. To prevent hoses from kinking, rotate each hose until painted indexing mark on hose is aligned to molded indexing tang on tank.

(4) Install hose clamps to hoses. Tighten clamp screws to 3 N·m (25 in. lbs.) torque.

(5) Position fuel tank to hydraulic jack.

(6) Raise tank into position.

(7) Install fuel tank mounting bolts. Tighten bolts to 81 N·m (60 ft. lbs.) torque.

(8) Install fuel fill and vent hoses to fuel fill tube at body. Install clamps and tighten clamp screws to 3 N·m (25 in. lbs.) torque.

(9) Connect fuel pump module pigtail harness electrical connector near front of tank.

(10) Connect both fuel lines to fuel filter/fuel pressure regulator. Refer to Quick-Connect Fittings for procedures.

(11) Connect EVAP hose near front of tank.

FUEL TANK (Continued)

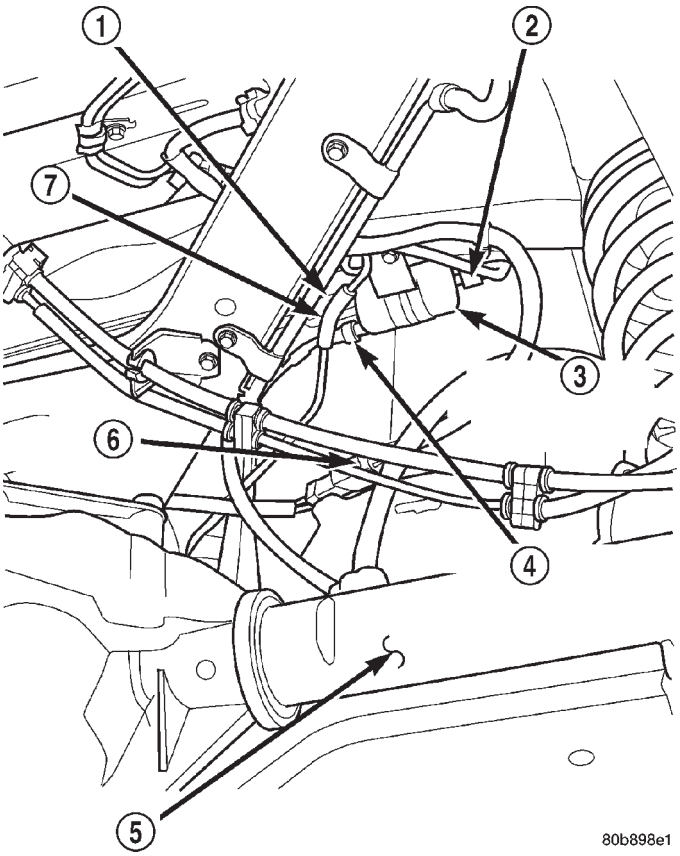

Fig. 30 Fuel Filter/Fuel Pressure Regulator

1 - FUEL RETURN LINE
2 - FUEL SUPPLY LINE (TO FUEL RAIL)
3 - FUEL FILTER/FUEL PRESSURE REGULATOR
4 - FUEL PRESSURE LINE
5 - REAR AXLE
6 - ELEC. CONNECTOR
7 - EVAP LINE

(12) Position rear axle vent hose and install new tie strap.

(13) Install new clamp to rear axle vent hose.

(14) Install vent hose to fitting at rear axle and tighten clamp.

(15) Install heat shield bolts.

(16) Install trailer hitch (if equipped).

(17) Install rear tow hooks (if equipped).

(18) Install fuel tank-to-rear bumper fascia clips.

(19) Lower vehicle and connect negative battery cable to battery.

(20) Check for leaks.

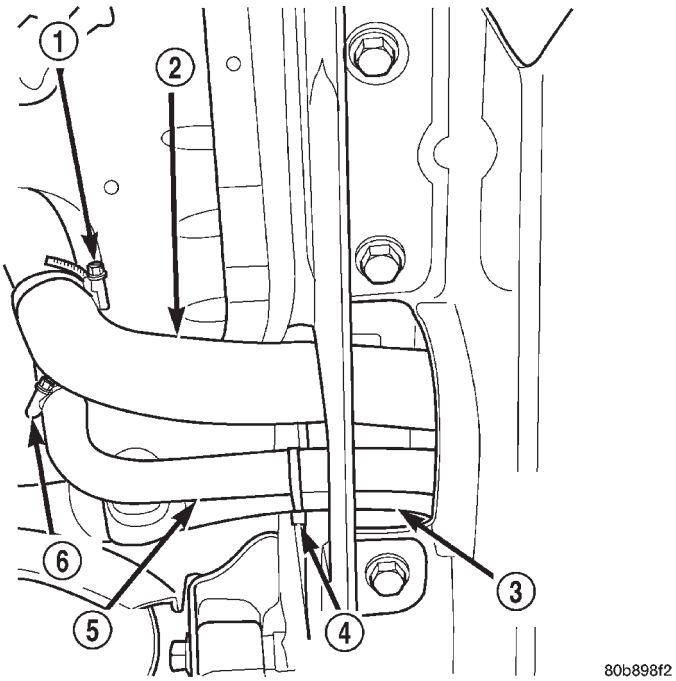

Fig. 31 Fill and Vent Hoses

1 - CLAMP
2 - FILL HOSE
3 - REAR AXLE VENT HOSE
4 - TIE STRAP
5 - VENT HOSE
6 - CLAMP

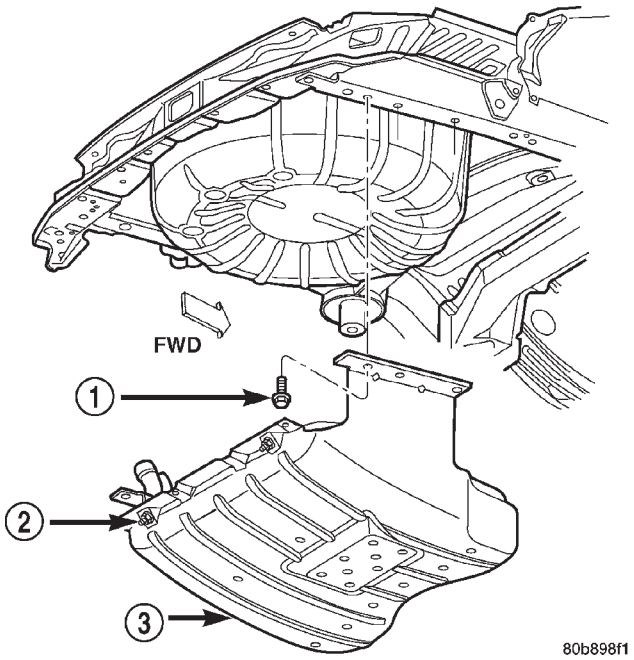

Fig. 32 Fuel Tank Mounting

1 - TANK MOUNTING BOLTS
2 - STRAP NUTS
3 - FUEL TANK/SHIELD ASSEMBLY

INLET FILTER (Continued)

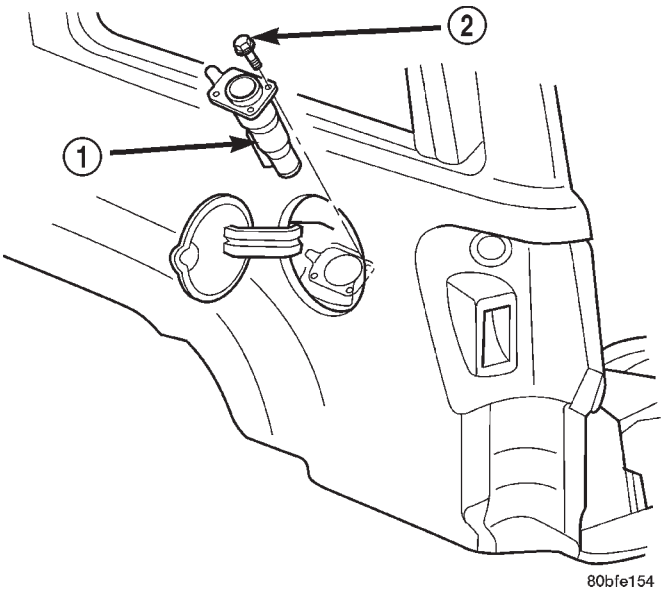

Fig. 33 Fuel Filler Tube

1 - FUEL FILLER TUBE
2 - MOUNTING BOLTS (3)

INLET FILTER

REMOVAL

The fuel pump inlet filter (strainer) is located on the bottom of fuel pump module (Fig. 34). The fuel pump module is located on top of fuel tank.

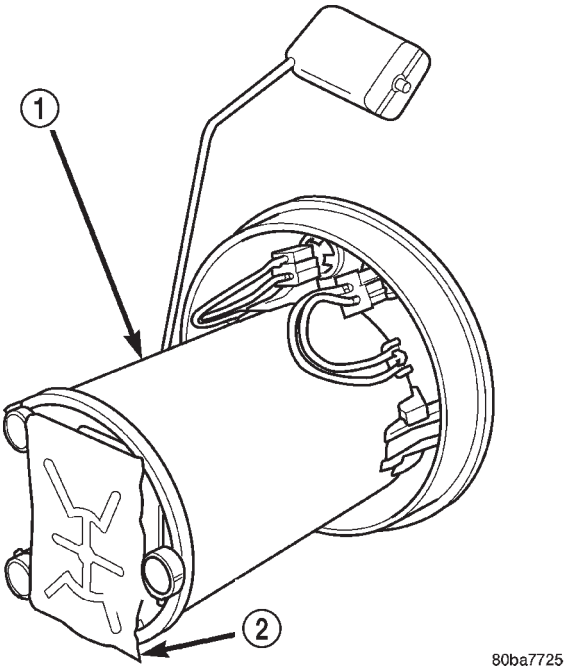

Fig. 34 Fuel Pump Inlet Filter

1 - FUEL PUMP MODULE
2 - FUEL PUMP INLET FILTER

The fuel pump inlet filter (strainer) is located on the bottom of fuel pump module (Fig. 34). The fuel pump module is located on top of fuel tank.

(1) Remove fuel tank. Refer to Fuel Tank Removal/Installation.

(2) Remove fuel pump module. Refer to Fuel Pump Module Removal/Installation.

(3) Remove filter by prying from bottom of module with 2 screwdrivers. Filter is snapped to module.

(4) Clean bottom of pump module.

INSTALLATION

The fuel pump inlet filter (strainer) is located on the bottom of fuel pump module (Fig. 34). The fuel pump module is located on top of fuel tank.

(1) Snap new filter to bottom of module.

(2) Install fuel pump module. Refer to Fuel Pump Module Removal/Installation.

(3) Install fuel tank. Refer to Fuel Tank Removal/Installation.

QUICK CONNECT FITTING

DESCRIPTION

Different types of quick-connect fittings are used to attach various fuel system components, lines and tubes. These are: a single-tab type, a two-tab type or a plastic retainer ring type. Some are equipped with safety latch clips. Some may require the use of a special tool for disconnection and removal. Refer to Quick-Connect Fittings Removal/Installation for more information.

CAUTION: The interior components (o-rings, clips) of quick-connect fittings are not serviced separately, but new plastic spacers are available for some types. If service parts are not available, do not attempt to repair the damaged fitting or fuel line (tube). If repair is necessary, replace the complete fuel line (tube) assembly.

STANDARD PROCEDURES - QUICK-CONNECT FITTINGS

Also refer to Fuel Tubes/Lines/Hoses and Clamps.

Different types of quick-connect fittings are used to attach various fuel system components, lines and tubes. These are: a single-tab type, a two-tab type or a plastic retainer ring type. Safety latch clips are used on certain components/lines. Certain fittings may require use of a special tool for disconnection.

QUICK CONNECT FITTING (Continued)

DISCONNECTING

WARNING: THE FUEL SYSTEM IS UNDER A CONSTANT PRESSURE (EVEN WITH ENGINE OFF). BEFORE SERVICING ANY FUEL SYSTEM HOSE, FITTING OR LINE, FUEL SYSTEM PRESSURE MUST BE RELEASED. REFER TO FUEL SYSTEM PRESSURE RELEASE PROCEDURE.

CAUTION: The interior components (o-rings, spacers) of some types of quick-connect fitting are not serviced separately. If service parts are not available, do not attempt to repair a damaged fitting or fuel line. If repair is necessary, replace complete fuel line assembly.

(1) Perform fuel pressure release procedure. Refer to Fuel Pressure Release Procedure.

(2) Disconnect negative battery cable from battery.

(3) Clean fitting of any foreign material before disassembly.

(4) **Single-Tab Type Fitting:** This type of fitting is equipped with a single pull tab (Fig. 35). The tab is removable. After tab is removed, quick-connect fitting can be separated from fuel system component.

(a) Press release tab on side of fitting to release pull tab (Fig. 36). **If release tab is not pressed prior to releasing pull tab, pull tab will be damaged.**

(b) While pressing release tab on side of fitting, use screwdriver to pry up pull tab (Fig. 36).

(c) Raise pull tab until it separates from quick-connect fitting (Fig. 37).

(5) **Two-Tab Type Fitting:** This type of fitting is equipped with tabs located on both sides of fitting (Fig. 38). The tabs are supplied for disconnecting quick-connect fitting from component being serviced.

(a) To disconnect quick-connect fitting, squeeze plastic retainer tabs (Fig. 38) against sides of quick-connect fitting with your fingers. Tool use is not required for removal and may damage plastic retainer.

(b) Pull fitting from fuel system component being serviced.

(c) The plastic retainer will remain on component being serviced after fitting is disconnected. The o-rings and spacer will remain in quick-connect fitting connector body.

(6) **Plastic Retainer Ring Type Fitting:** This type of fitting can be identified by the use of a full-round plastic retainer ring (Fig. 39) usually black in color.

(a) To release fuel system component from quick-connect fitting, firmly push fitting towards component being serviced while firmly pushing plastic retainer ring into fitting (Fig. 39). With plastic ring depressed, pull fitting from component. **The plastic retainer ring must be pressed squarely into fitting body. If this retainer is cocked during removal, it may be difficult to disconnect fitting. Use an open-end wrench on shoulder of plastic retainer ring to aid in disconnection.**

(b) After disconnection, plastic retainer ring will remain with quick-connect fitting connector body.

(c) Inspect fitting connector body, plastic retainer ring and fuel system component for damage. Replace as necessary.

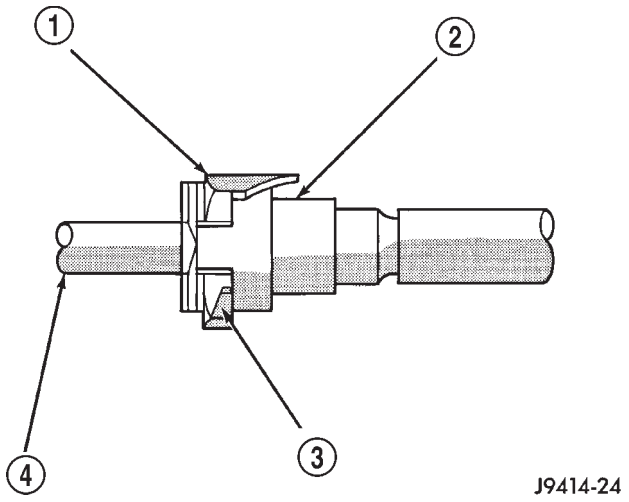

Fig. 35 Single-Tab Type Fitting

1 - PULL TAB
2 - QUICK-CONNECT FITTING
3 - PRESS HERE TO REMOVE PULL TAB
4 - INSERTED TUBE END

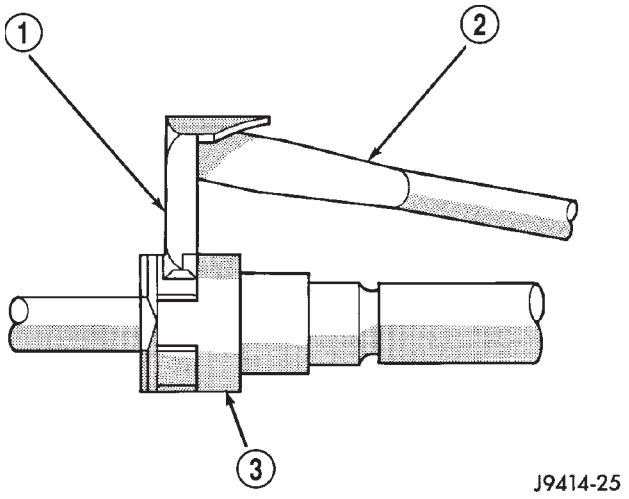

Fig. 36 Disconnecting Single-Tab Type Fitting

1 - PULL TAB
2 - SCREWDRIVER
3 - QUICK-CONNECT FITTING

QUICK CONNECT FITTING (Continued)

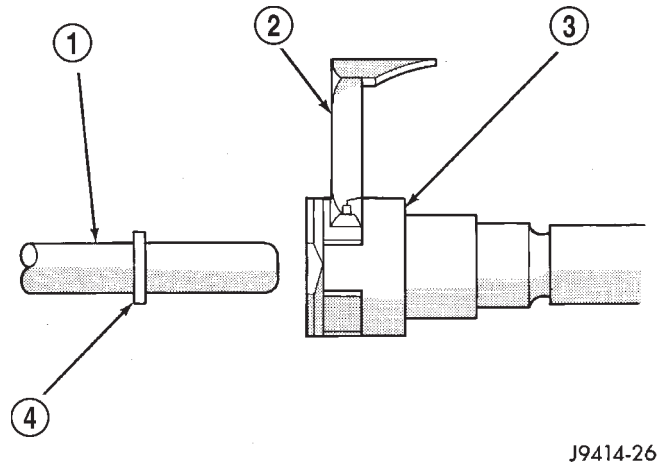

Fig. 37 Removing Pull Tab

1 - FUEL TUBE OR FUEL SYSTEM COMPONENT
2 - PULL TAB
3 - QUICK-CONNECT FITTING
4 - FUEL TUBE STOP

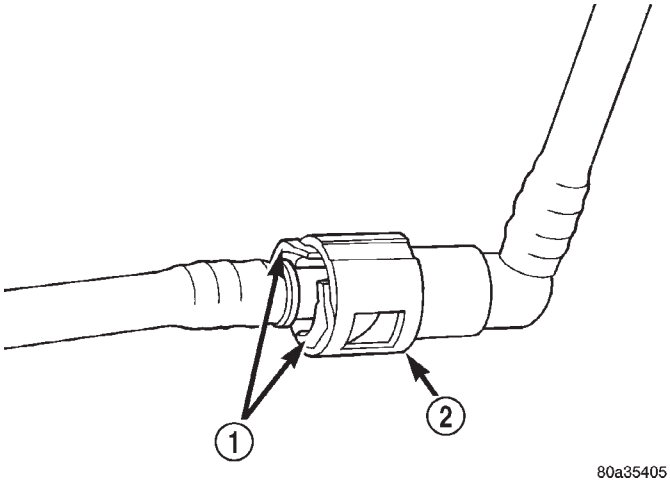

Fig. 38 Typical Two-Tab Type Quick-Connect Fitting

1 - TAB(S)
2 - QUICK-CONNECT FITTING

(7) **Latch Clips:** Depending on vehicle model and engine, 2 different types of safety latch clips are used (Fig. 40) or (Fig. 41). Type-1 is tethered to fuel line and type-2 is not. A special tool will be necessary to disconnect fuel line after latch clip is removed. The latch clip may be used on certain fuel line/fuel rail connection, or to join fuel lines together.

(a) Type 1: Pry up on latch clip with a screwdriver (Fig. 40).

(b) Type 2: Separate and unlatch 2 small arms on end of clip (Fig. 41) and swing away from fuel line.

(c) Slide latch clip toward fuel rail while lifting with screwdriver.

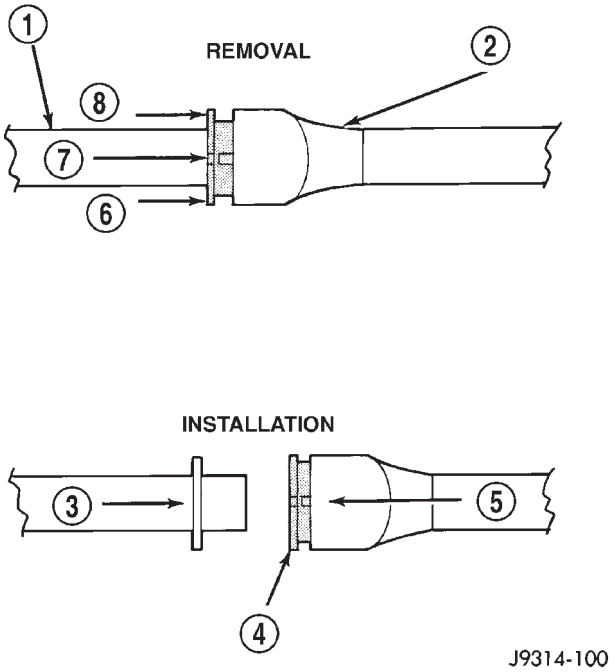

Fig. 39 Plastic Retainer Ring Type Fitting

1 - FUEL TUBE
2 - QUICK CONNECT FITTING
3 - PUSH
4 - PLASTIC RETAINER
5 - PUSH
6 - PUSH
7 - PUSH
8 - PUSH

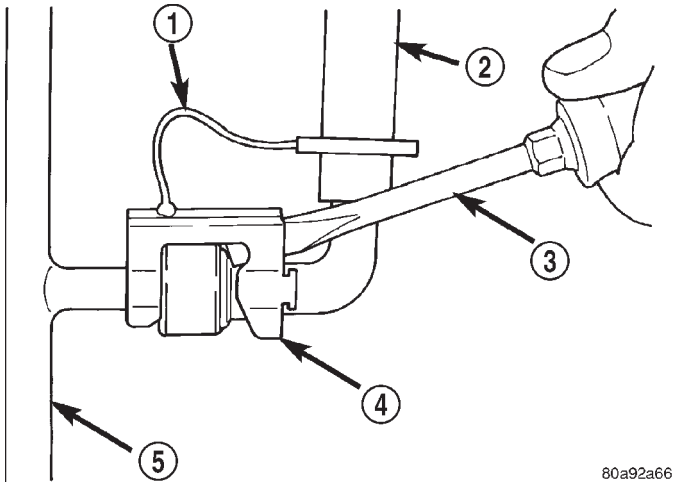

Fig. 40 Latch Clip—Type 1

1 - TETHER STRAP
2 - FUEL LINE
3 - SCREWDRIVER
4 - LATCH CLIP
5 - FUEL RAIL

QUICK CONNECT FITTING (Continued)

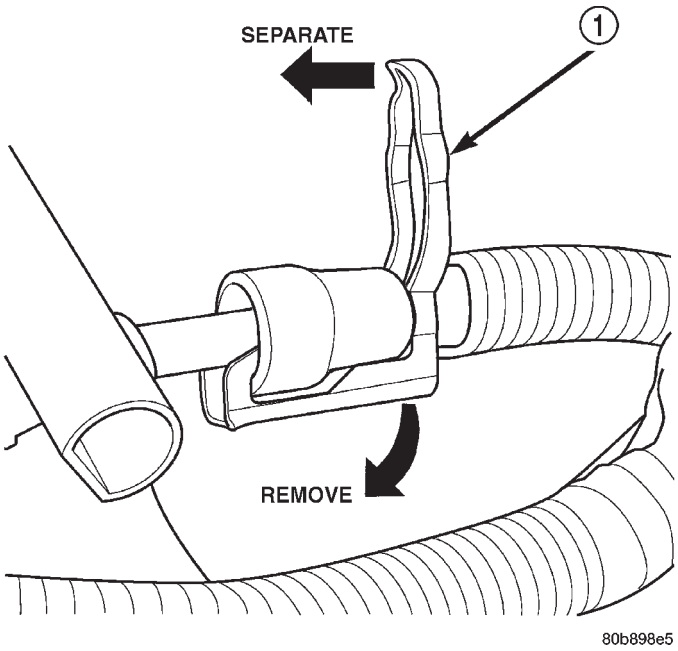

Fig. 41 Latch Clip—Type 2

1 - LATCH CLIP

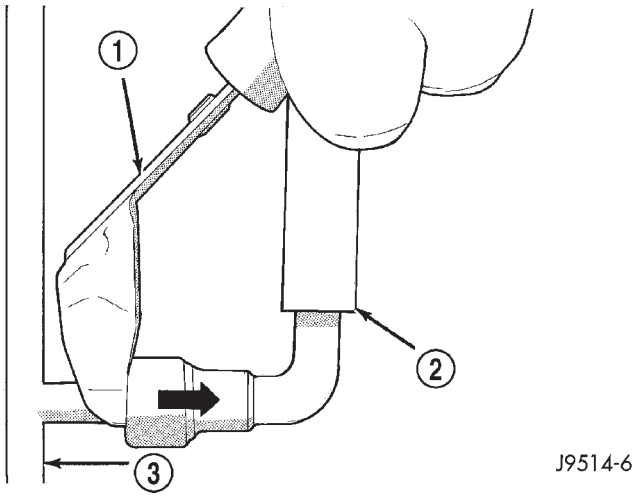

Fig. 42 Fuel Line Disconnection Using Special Tool

1 - SPECIAL FUEL LINE TOOL
2 - FUEL LINE
3 - FUEL RAIL

(d) Insert special fuel line removal tool (Snap-On number FIH 9055-1 or equivalent) into fuel line (Fig. 42). Use tool to release locking fingers in end of line.

(e) With special tool still inserted, pull fuel line from fuel rail.

(f) After disconnection, locking fingers will remain within quick-connect fitting at end of fuel line.

(8) Disconnect quick-connect fitting from fuel system component being serviced.

CONNECTING

(1) Inspect quick-connect fitting body and fuel system component for damage. Replace as necessary.

(2) Prior to connecting quick-connect fitting to component being serviced, check condition of fitting and component. Clean parts with a lint-free cloth. Lubricate with clean engine oil.

(3) Insert quick-connect fitting into fuel tube or fuel system component until built-on stop on fuel tube or component rests against back of fitting.

(4) Continue pushing until a click is felt.

(5) Single-tab type fitting: Push new tab down until it locks into place in quick-connect fitting.

(6) Verify a locked condition by firmly pulling on fuel tube and fitting (15-30 lbs.).

(7) Latch Clip Equipped: Install latch clip (snaps into position). **If latch clip will not fit, this indicates fuel line is not properly installed to fuel rail (or other fuel line). Recheck fuel line connection.**

(8) Connect negative cable to battery.

(9) Start engine and check for leaks.

ROLLOVER VALVE

DESCRIPTION

The fuel tank is equipped with a rollover valve. The valve is located on the top of the fuel tank (Fig. 43).

OPERATION

The rollover valve will prevent fuel flow through the fuel tank vent (EVAP) hoses in the event of an accidental vehicle rollover. The EVAP canister draws fuel vapors from the fuel tank through this valve.

ROLLOVER VALVE (Continued)

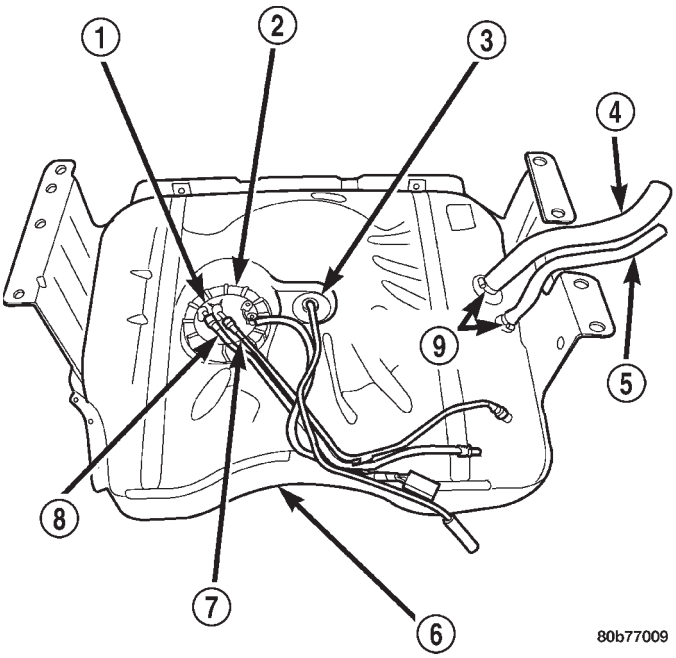

Fig. 43 Rollover Valve Location

1 - FUEL PUMP MODULE
2 - LOCKNUT
3 - ROLL OVER VALVE
4 - FUEL FILL HOSE
5 - FUEL VENT HOSE
6 - FUEL TANK
7 - FUEL SUPPLY (PRESSURE) LINE
8 - FUEL RETURN LINE
9 - CLAMPS

The valve cannot be serviced separately. If replacement is necessary, the fuel tank must be replaced. Refer to Fuel Tank Removal/Installation.

REMOVAL

The rollover valves(s) are/is molded into the fuel tank and are not serviced separately. If replacement is necessary, the fuel tank must be replaced. Refer to Fuel Tank Removal/Installation.

FUEL INJECTION

TABLE OF CONTENTS

page

FUEL INJECTION
DIAGNOSIS AND TESTING 27
VISUAL INSPECTION 27
SPECIFICATIONS 34
ACCELERATOR PEDAL
REMOVAL 35
INSTALLATION 35
CRANKSHAFT POSITION SENSOR
DESCRIPTION 36
OPERATION 36
REMOVAL 36
INSTALLATION 37
FUEL INJECTOR
DESCRIPTION 38
OPERATION 38
DIAGNOSIS AND TESTING 39
FUEL INJECTOR TEST 39
REMOVAL 39
INSTALLATION 39
FUEL PUMP RELAY
DESCRIPTION 39
OPERATION 40
IDLE AIR CONTROL MOTOR
DESCRIPTION 40
OPERATION 40
REMOVAL 41
INSTALLATION 41
INTAKE AIR TEMPERATURE SENSOR
DESCRIPTION 41
OPERATION 41
REMOVAL 41
INSTALLATION 42
MAP SENSOR
DESCRIPTION 42
OPERATION 42
REMOVAL 43
INSTALLATION 44
O2S HEATER RELAY
DESCRIPTION 44
OPERATION 44
REMOVAL 44
INSTALLATION 44
O2S SENSOR
DESCRIPTION 44
OPERATION 45
REMOVAL 46
INSTALLATION 46
THROTTLE BODY
DESCRIPTION 48
OPERATION 48
REMOVAL 48
INSTALLATION 49
THROTTLE CONTROL CABLE
REMOVAL 50
INSTALLATION 50
THROTTLE POSITION SENSOR
DESCRIPTION 51
OPERATION 51
REMOVAL 52
INSTALLATION 52

FUEL INJECTION

DIAGNOSIS AND TESTING - VISUAL INSPECTION

A visual inspection for loose, disconnected or incorrectly routed wires, vacuum lines and hoses should be made. This should be done before attempting to diagnose or service the fuel injection system. A visual check will help spot these faults and save unnecessary test and diagnostic time. A thorough visual inspection will include the following checks:

(1) Verify three 32–way electrical connectors are fully inserted into connector of Powertrain Control Module (PCM) (Fig. 1).

(2) Inspect battery cable connections. Be sure they are clean and tight.

(3) Inspect fuel pump relay and air conditioning compressor clutch relay (if equipped). Inspect ASD and oxygen sensor heater relay connections. Inspect starter motor relay connections. Inspect relays for signs of physical damage and corrosion. The relays are located in the Power Distribution Center (PDC) (Fig. 2). Refer to label on PDC cover for relay location.

(4) Inspect ignition coil connections (Fig. 3)or (Fig. 4).

FUEL INJECTION (Continued)

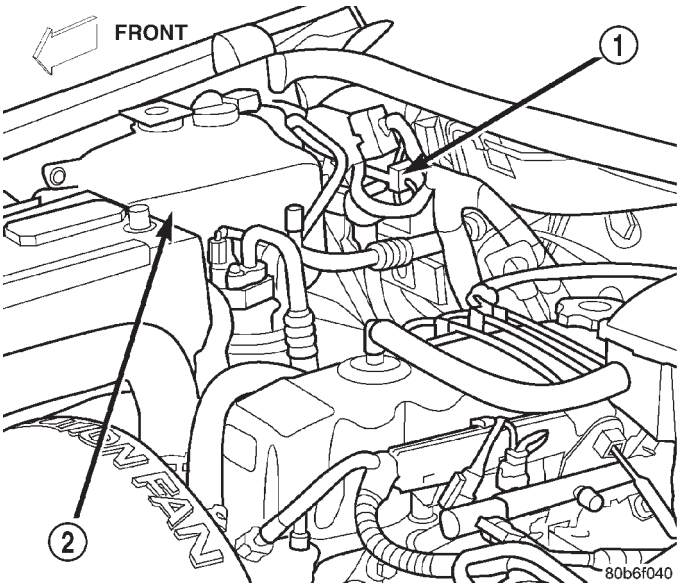

Fig. 1 Powertrain Control Module (PCM) Location

1 - PCM
2 - COOLANT TANK

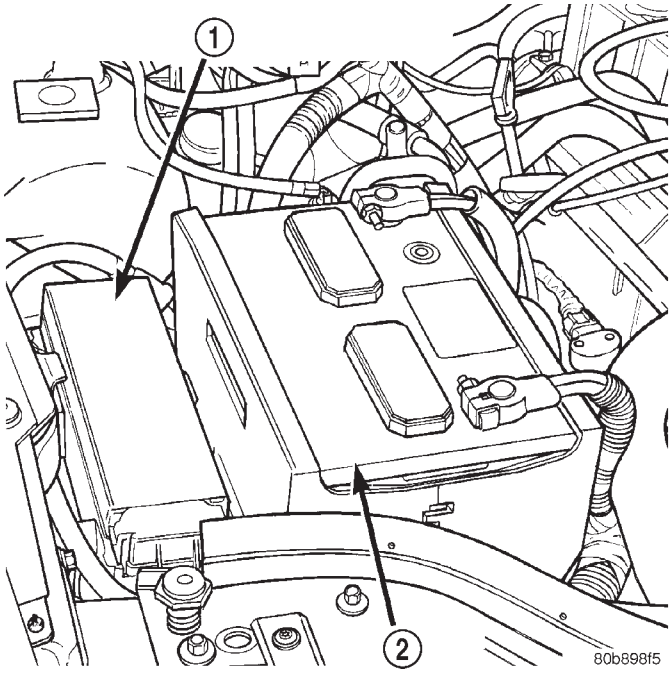

Fig. 2 Power Distribution Center (PDC) Location

1 - POWER DISTRIBUTION CENTER (PDC)
2 - BATTERY

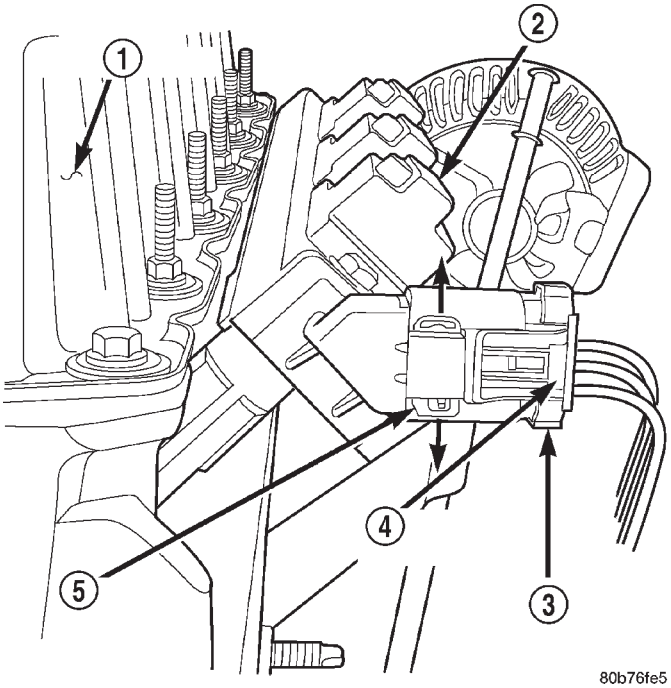

Fig. 3 Ignition Coil Connector—4.0L Engine

1 - REAR OF VALVE COVER
2 - COIL RAIL
3 - COIL CONNECTOR
4 - RELEASE LOCK
5 - SLIDE TAB

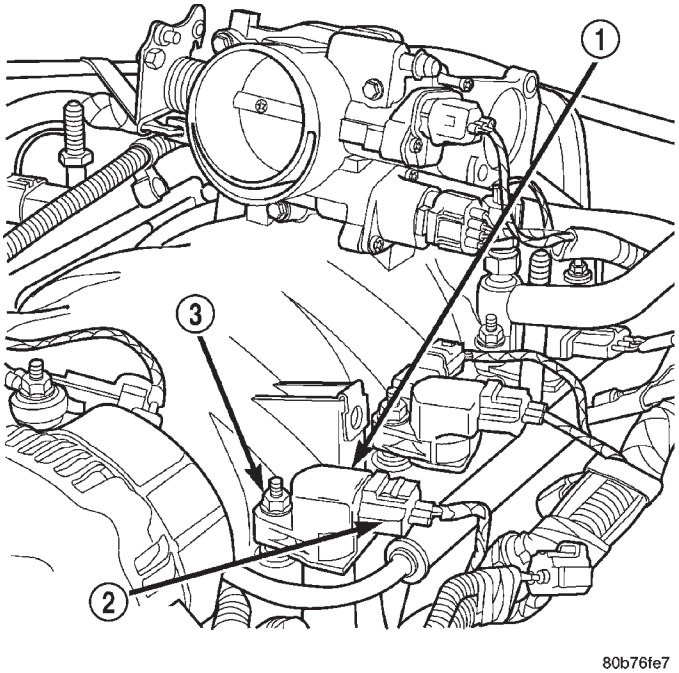

Fig. 4 Ignition Coil Connector—4.7L V-8 Engine

1 - IGNITION COIL
2 - COIL ELECTRICAL CONNECTOR
3 - COIL MOUNTING STUD/NUT

FUEL INJECTION (Continued)

(5) Verify camshaft position sensor wire connector is firmly connected (Fig. 5) or (Fig. 6).

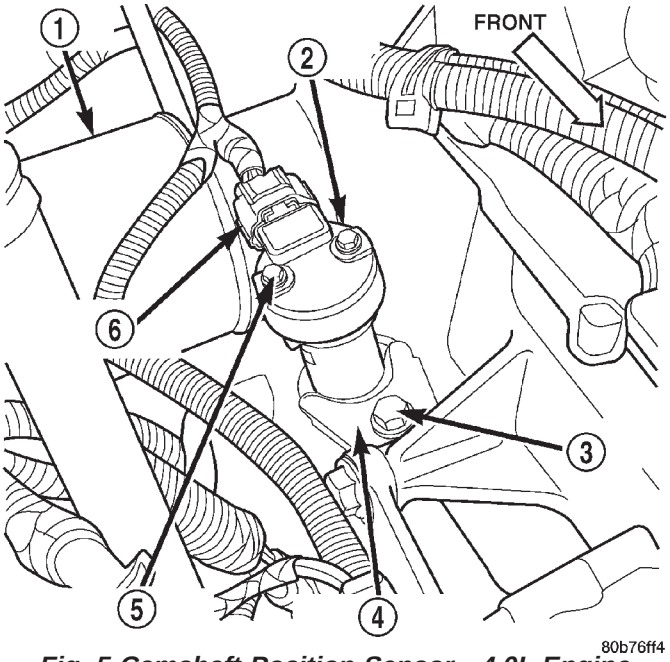

Fig. 5 Camshaft Position Sensor—4.0L Engine

1 - OIL FILTER
2 - CAMSHAFT POSITION SENSOR
3 - CLAMP BOLT
4 - HOLD-DOWN CLAMP
5 - MOUNTING BOLTS (2)
6 - ELEC. CONNECTOR

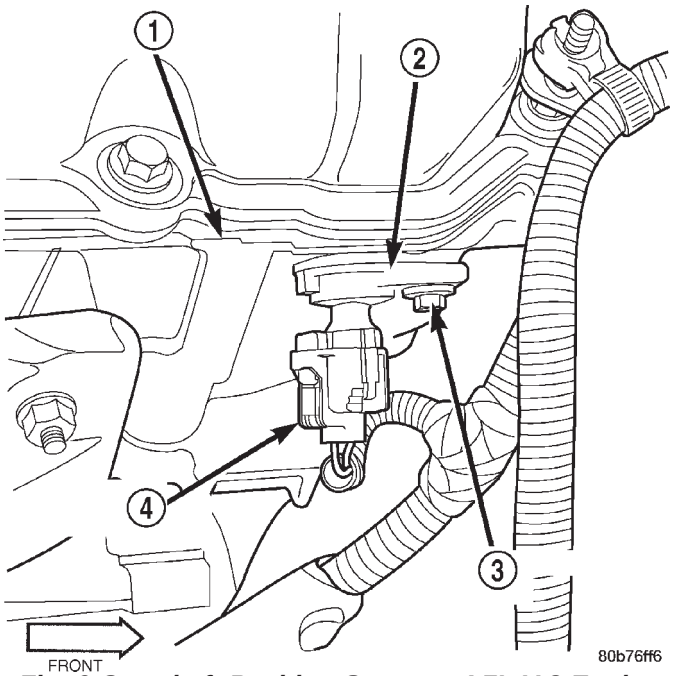

Fig. 6 Camshaft Position Sensor—4.7L V-8 Engine

1 - RIGHT CYLINDER HEAD
2 - CAMSHAFT POSITION SENSOR
3 - MOUNTING BOLT
4 - ELEC. CONNECTOR

(6) Verify crankshaft position sensor wire connector is firmly connected (Fig. 7) or (Fig. 8).

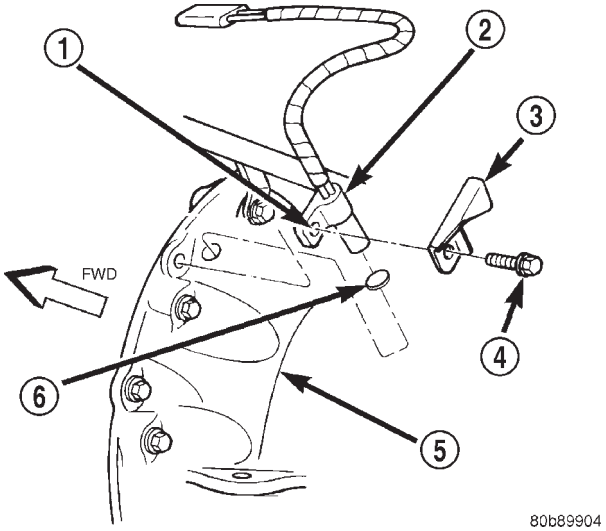

Fig. 7 Crankshaft Position Sensor—4.0L Engine

1 - SLOTTED HOLE
2 - CRANKSHAFT POSITION SENSOR
3 - WIRE SHIELD
4 - MOUNTING BOLT
5 - TRANSMISSION HOUSING
6 - PAPER SPACER

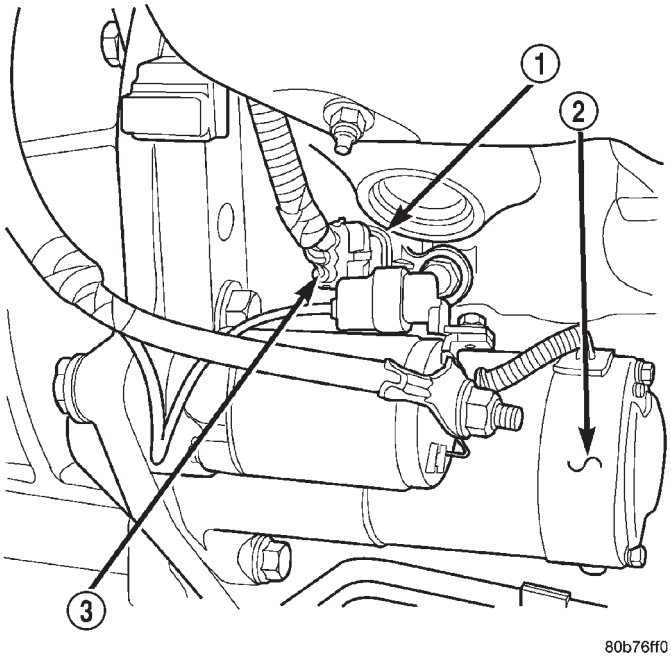

Fig. 8 Crankshaft Position Sensor—4.7L V-8 Engine

1 - CRANKSHAFT POSITION SENSOR
2 - STARTER
3 - ELEC. CONNECTOR

FUEL INJECTION (Continued)

(7) Verify generator output wire (B+ wire) and generator field connector are firmly connected to generator.

(8) Inspect system body grounds for loose or dirty connections. Refer to Group 8, Wiring for ground locations.

(9) Verify crankcase ventilation (CCV) operation. Refer to Emission Control System for additional information.

(10) Inspect all fuel line quick-connect fittings for damage or leaks.

(11) Verify hose connections to all ports of vacuum fittings on intake manifold, and for emission system are tight and not leaking.

(12) Inspect accelerator cable, transmission throttle cable (if equipped) and speed control cable connections (if equipped). Check their connections to throttle body linkage for any binding or restrictions.

(13) Verify vacuum booster hose is firmly connected to fitting on intake manifold. Also check connection to brake vacuum booster.

(14) Inspect air cleaner inlet and air cleaner element for dirt or restrictions.

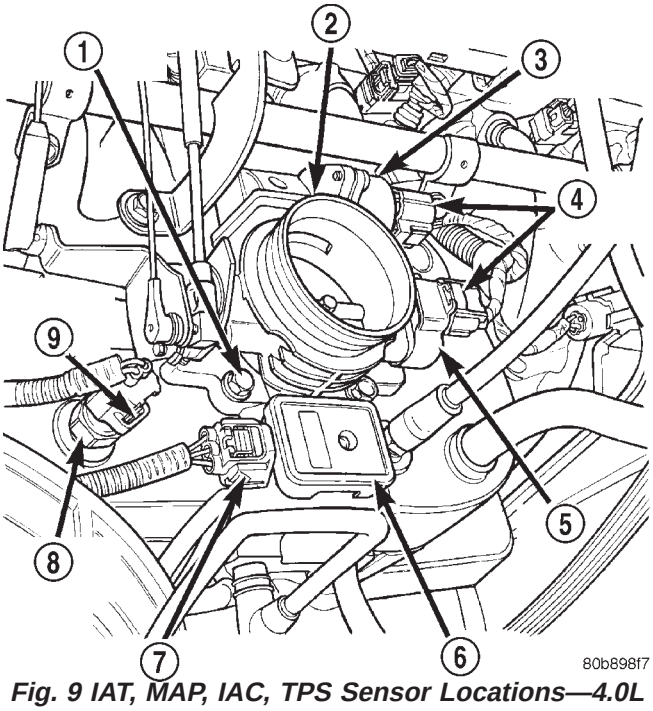

Fig. 9 IAT, MAP, IAC, TPS Sensor Locations—4.0L Engine

1 - MOUNTING BOLTS (4)
2 - THROTTLE BODY
3 - IAC MOTOR
4 - ELEC. CONN.
5 - TPS
6 - MAP SENSOR
7 - ELEC. CONN.
8 - IAT SENSOR
9 - ELEC. CONN.

(15) Inspect radiator grille area, radiator fins and air conditioning condenser for restrictions.

(16) 4.0L Engine: Verify MAP, Intake Manifold Air Temperature (IAT) sensor, TPS and Idle Air Control (IAC) motor connectors are firmly connected (Fig. 9). Be sure throttle body mounting bolts (Fig. 9)are tight.

(17) 4.7L Engine: Verify Intake Manifold Air Temperature (IAT) sensor, TPS and Idle Air Control (IAC) motor connectors are firmly connected (Fig. 10). Be sure throttle body mounting bolts (Fig. 10)are tight.

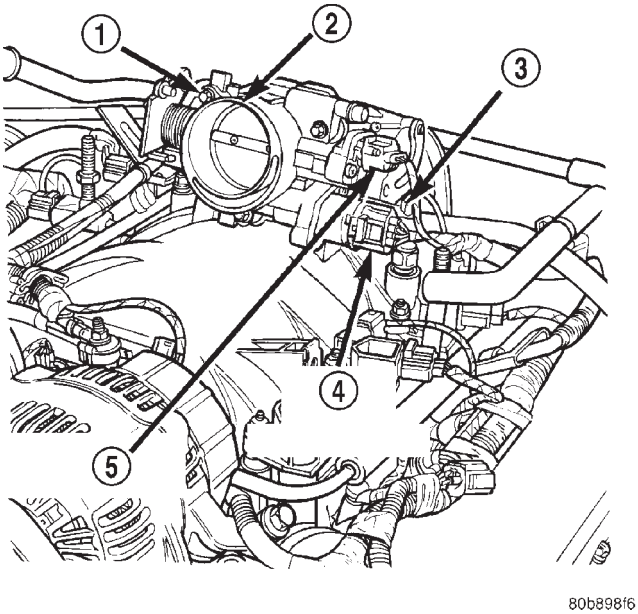

Fig. 10 IAT, IAC, TPS Sensor Locations—4.7L V-8 Engine

1 - MOUNTING BOLTS (3)
2 - THROTTLE BODY
3 - IAT SENSOR CONNECTOR
4 - IAC MOTOR CONNECTOR
5 - TPS CONNECTOR

FUEL INJECTION (Continued)

(18) 4.0L Engine: Verify wire harness connector is firmly connected to Engine Coolant Temperature (ECT) sensor (Fig. 11).

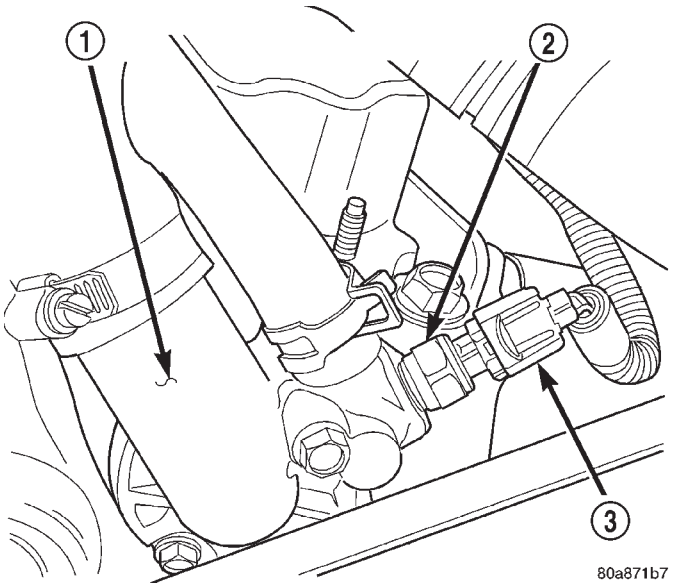

Fig. 11 ECT Sensor Location—4.0L Engine

1 - THERMOSTAT HOUSING
2 - ENGINE COOLANT TEMPERATURE SENSOR
3 - ELECTRICAL CONNECTOR

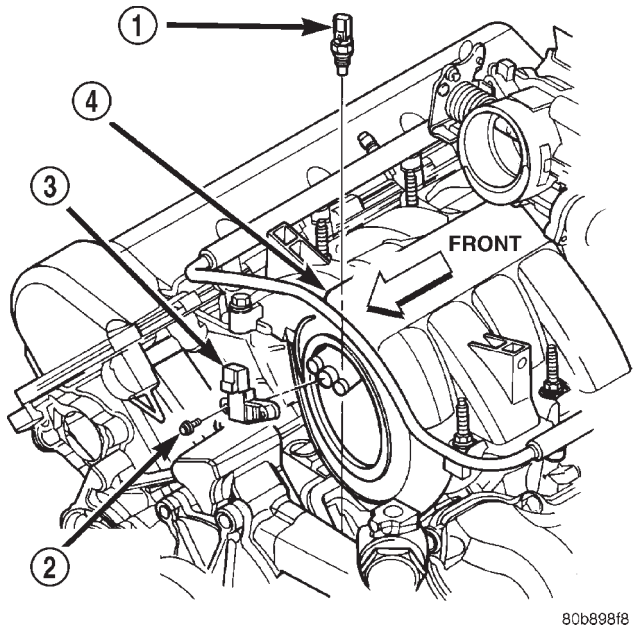

Fig. 12 MAP and ECT Sensor Locations—4.7L V-8 Engine

1 - ECT SENSOR
2 - MOUNTING BOLTS (2)
3 - MAP SENSOR
4 - INTAKE MANIFOLD

(19) 4.7L Engine: Verify MAP and Engine Coolant Temperature (ECT) sensor electrical connectors are firmly connected to sensors (Fig. 12).

(20) Verify fuel injector wire harness connectors are firmly connected to injectors in correct order. Each harness connector is numerically tagged with injector number (INJ 1, INJ 2 etc.) of its corresponding fuel injector and cylinder number.

(21) Raise and support vehicle.

(22) Verify all oxygen sensor wire connectors are firmly connected to sensors. Inspect sensors and connectors for damage (Fig. 13)or (Fig. 14).

(23) Inspect for pinched or leaking fuel tubes/lines. Inspect for pinched, cracked or leaking fuel hoses.

(24) Inspect for exhaust system restrictions such as pinched exhaust pipes, collapsed muffler or plugged catalytic convertor.

(25) If equipped with automatic transmission, verify electrical harness is firmly connected to park/neutral switch and to transmission components.

(26) Verify fuel pump module pigtail harness electrical connector (Fig. 15) is firmly connected to body harness connector.

(27) Inspect fuel line harness (from fuel pump module) at fuel filter/fuel pressure regulator (Fig. 15) for chaffing, cracks or leaks.

(28) Verify battery cable and solenoid feed wire connections to starter solenoid are tight and clean.

(29) Inspect for chaffed wires or wires rubbing up against other components.

FUEL INJECTION (Continued)

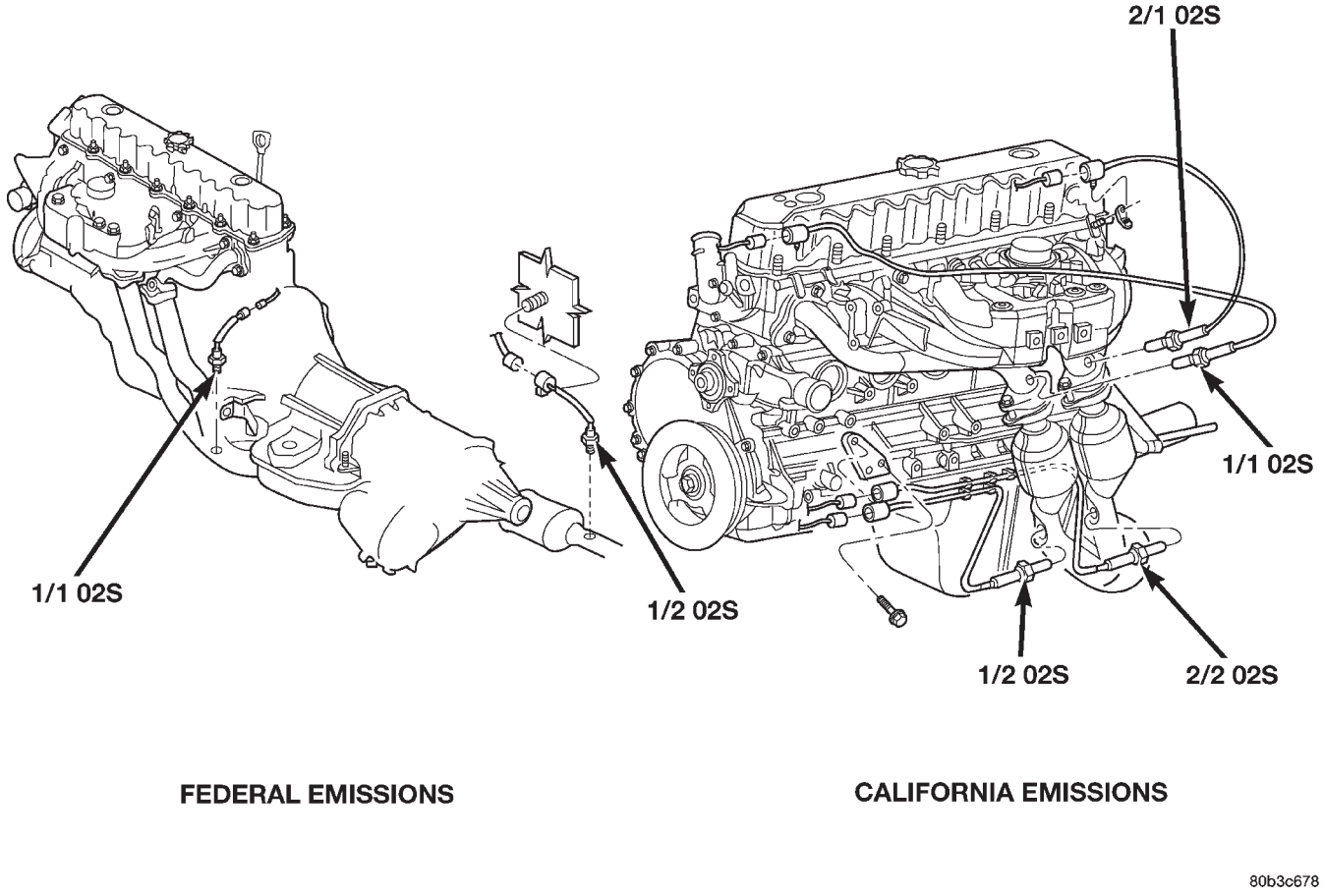

Fig. 13 Oxygen Sensor Locations—4.0L Engine

FUEL INJECTION (Continued)

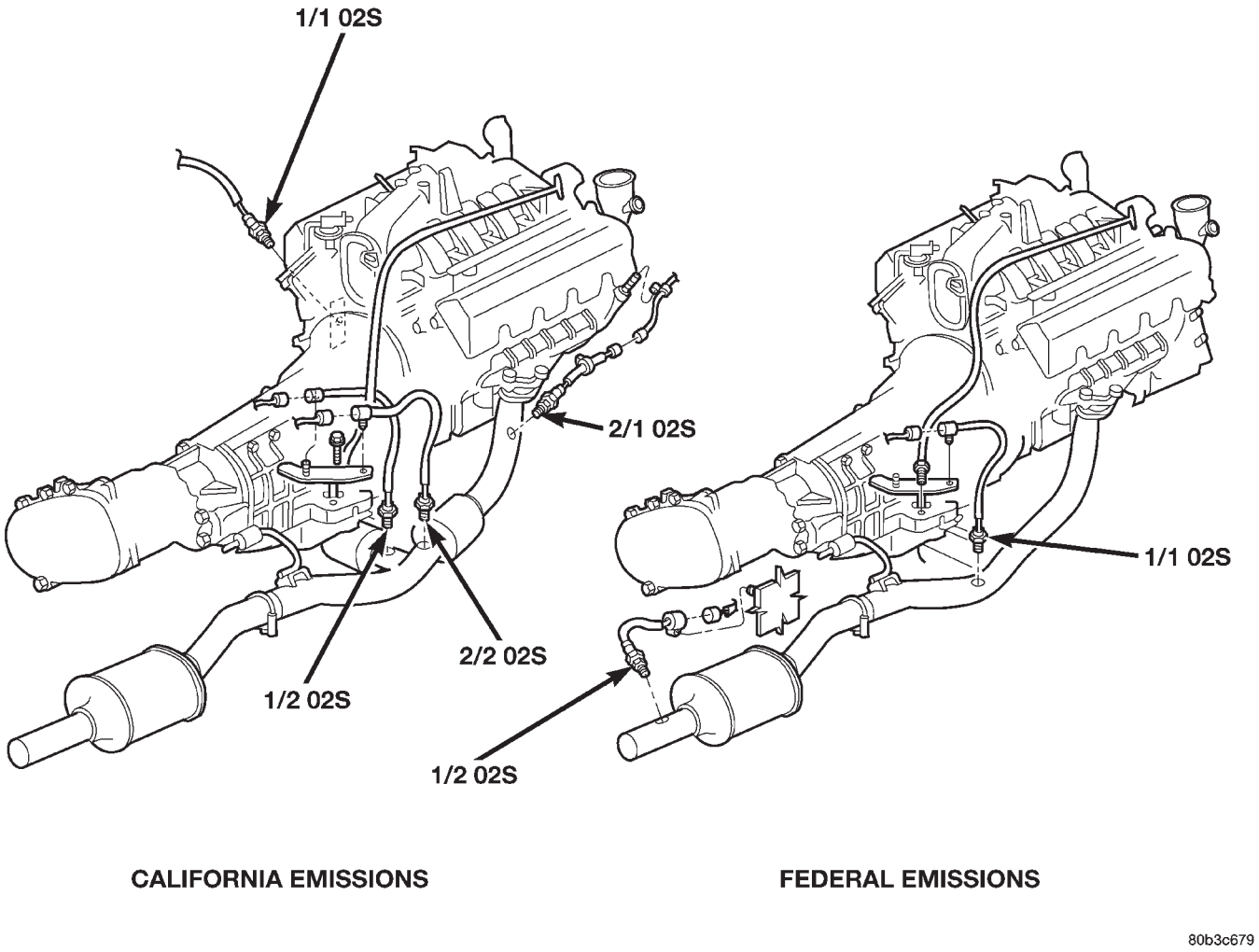

Fig. 14 Oxygen Sensor Locations—4.7L V-8 Engine

FUEL INJECTION (Continued)

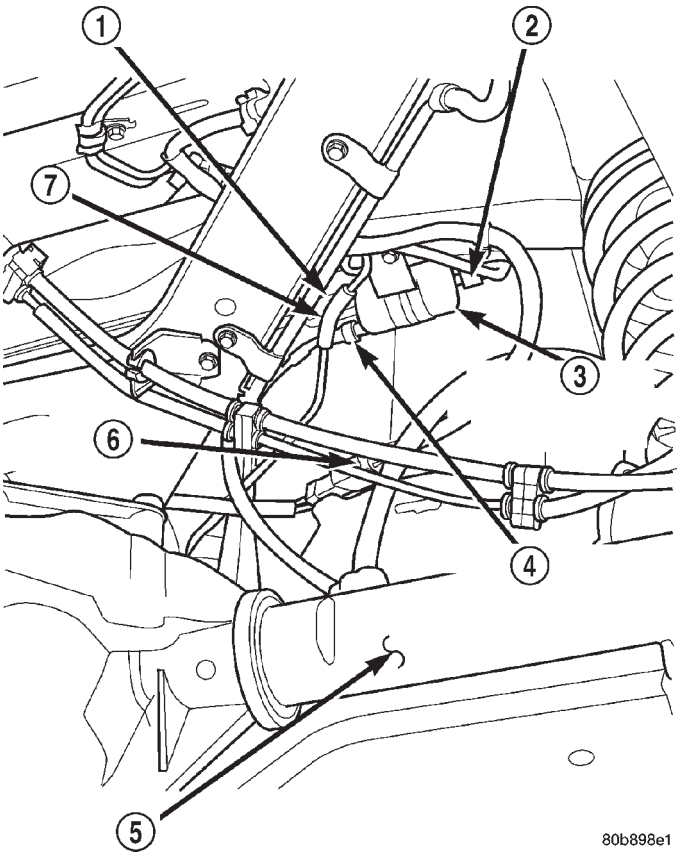

Fig. 15 Fuel Filter/Fuel Pressure Regulator Location

1 - FUEL RETURN LINE
2 - FUEL SUPPLY LINE (TO FUEL RAIL)
3 - FUEL FILTER/FUEL PRESSURE REGULATOR
4 - FUEL PRESSURE LINE
5 - REAR AXLE
6 - ELEC. CONNECTOR
7 - EVAP LINE

(30) Inspect for chaffed vacuum lines or lines rubbing up against other components.

SPECIFICATIONS

TORQUE - FUEL INJECTION

DESCRIPTION	N-m	Ft. Lbs.	In. Lbs.
Air Cleaner Housing Mount. Nuts	10		93
Air Cleaner Air Duct Clamps	4		35
Air Cleaner Resonator Bolts	4		35
Engine Coolant Temperature Sensor—4.0L Engine	11		96
Engine Coolant Temperature Sensor—4.7L Engine	11		96
Fuel Hose Clamps	1		10
IAC Motor-To-Throttle Body Bolts—4.0L Engine	7		′60
IAC Motor-To-Throttle Body Bolts—4.7L Engine	7		60
Intake Manifold Air Temp. Sensor—4.0L Engine	28	20	

SPECIFICATIONS (Continued)

DESCRIPTION	N-m	Ft. Lbs.	In. Lbs.
Intake Manifold Air Temp. Sensor—4.7L Engine	28	20	
MAP Sensor Mounting Screws—4.0L Engine	3		25
MAP Sensor Mounting Screws—4.7L Engine	3		25
Oxygen Sensor—All Engines	30	22	
PCM-to-Mounting Bracket Screws	3		25
PCM-to-Mounting Bracket Screws	9		80
Radiator Cooling Fan Relay Bolts	3		25
Throttle Body Mounting Bolts—4.0L Engine	11		100
Throttle Body Mounting Bolts—4.7L Engine	12		105
TPS Mounting Screws—4.0L Engine	7		60
TPS Mounting Screws—4.7L Engine	7		60

ACCELERATOR PEDAL

REMOVAL

The accelerator pedal is connected to the throttle body linkage by the throttle cable. The cable is protected by a plastic sheathing and is connected to the throttle body linkage by a ball socket. It is connected to the accelerator pedal arm by a plastic retainer (clip) (Fig. 16). This retainer (clip) snaps into the top of the accelerator pedal arm. A retainer clip (Fig. 16) is also used to fasten cable to dash panel.

CAUTION: Be careful not to damage or kink the cable core wire (within the cable sheathing) while servicing accelerator pedal or throttle cable.

(1) From inside vehicle, hold up accelerator pedal. Remove plastic cable retainer (clip) and throttle cable core wire from upper end of pedal arm. Plastic cable retainer (clip) snaps into pedal arm.

(2) Remove accelerator pedal bracket nuts. Remove accelerator pedal assembly.

INSTALLATION

The accelerator pedal is connected to the throttle body linkage by the throttle cable. The cable is protected by a plastic sheathing and is connected to the throttle body linkage by a ball socket. It is connected to the accelerator pedal arm by a plastic retainer (clip) (Fig. 16). This retainer (clip) snaps into the top of the accelerator pedal arm. A retainer clip (Fig. 16) is also used to fasten cable to dash panel.

(1) Place accelerator pedal assembly over studs protruding from floor pan. Tighten mounting nuts to 12 N·m ± 2 N·m (105 in. lbs. ± 20 in. lbs.) torque.

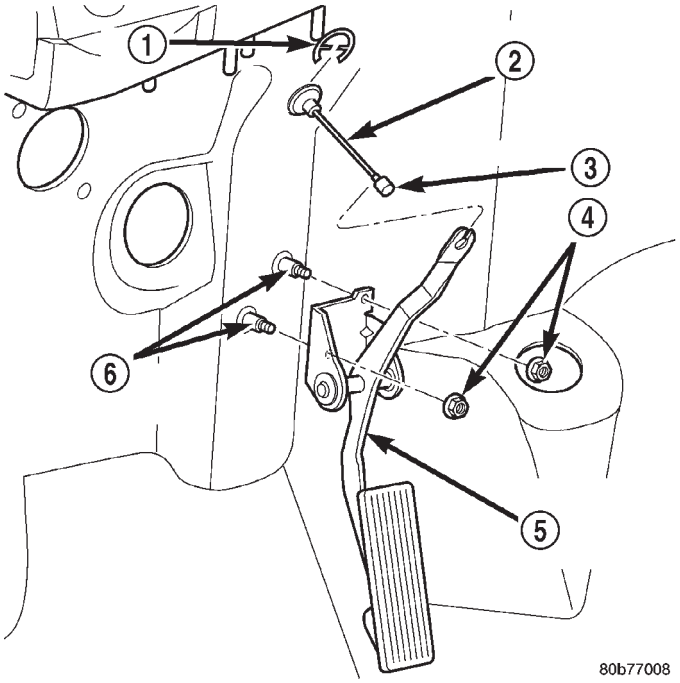

Fig. 16 Accelerator Pedal Mounting

1 - CLIP
2 - ACCELERATOR CABLE
3 - CABLE CONNECTOR
4 - MOUNTING NUTS (2)
5 - PEDAL/BRACKET ASSEMBLY
6 - MOUNTING STUDS (2)

(2) Slide throttle cable into opening in top of pedal arm. Push plastic cable retainer (clip) into pedal arm opening until it snaps into place.

(3) Before starting engine, operate accelerator pedal to check for any binding.

CRANKSHAFT POSITION SENSOR

DESCRIPTION - 4.0L

The Crankshaft Position Sensor (CKP) is mounted to the transmission bellhousing at the left/rear side of the engine block (Fig. 17).

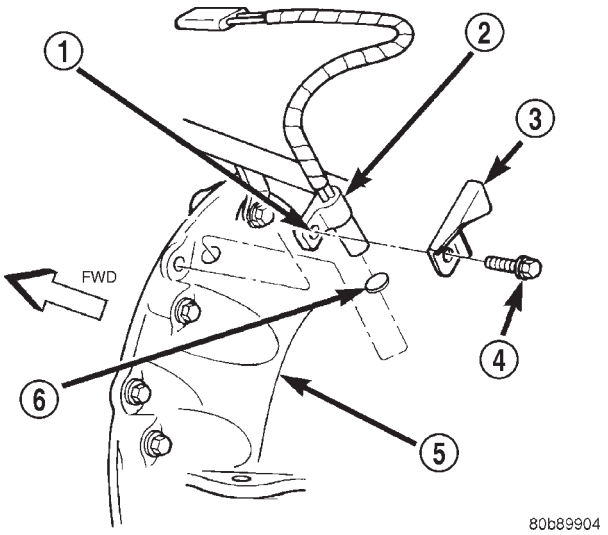

Fig. 17 CKP Sensor Location—4.0L 6-Cyl. Engine

1 - SLOTTED HOLE
2 - CRANKSHAFT POSITION SENSOR
3 - WIRE SHIELD
4 - MOUNTING BOLT
5 - TRANSMISSION HOUSING
6 - PAPER SPACER

DESCRIPTION - 4.7L

The Crankshaft Position Sensor (CKP) is mounted into the engine block above the starter motor (Fig. 18).

OPERATION - 4.0L

Engine speed and crankshaft position are provided through the crankshaft position sensor. The sensor generates pulses that are the input sent to the powertrain control module (PCM). The PCM interprets the sensor input to determine the crankshaft position. The PCM then uses this position, along with other inputs, to determine injector sequence and ignition timing.

The sensor is a hall effect device combined with an internal magnet. It is also sensitive to steel within a certain distance from it.

On 4.0L 6-cylinder engines, the flywheel/drive plate has 3 sets of four notches at its outer edge (Fig. 19).

The notches cause a pulse to be generated when they pass under the sensor. The pulses are the input

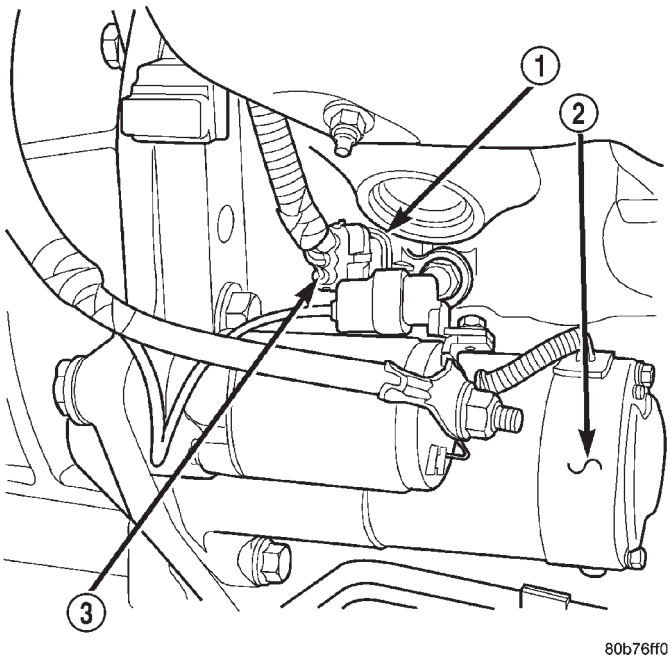

Fig. 18 CKP Sensor Location—4.7L V–8 Engine

1 - CRANKSHAFT POSITION SENSOR
2 - STARTER
3 - ELEC. CONNECTOR

to the PCM. For each engine revolution there are 3 sets of four pulses generated.

The trailing edge of the fourth notch, which causes the pulse, is four degrees before top dead center (TDC) of the corresponding piston.

The engine will not operate if the PCM does not receive a crankshaft position sensor input.

OPERATION - 4.7L

Engine speed and crankshaft position are provided through the crankshaft position sensor. The sensor generates pulses that are the input sent to the powertrain control module (PCM). The PCM interprets the sensor input to determine the crankshaft position. The PCM then uses this position, along with other inputs, to determine injector sequence and ignition timing.

The sensor is a hall effect device combined with an internal magnet. It is also sensitive to steel within a certain distance from it.

On the 4.7L V–8 engine, a tonewheel is bolted to the engine crankshaft (Fig. 20). This tonewheel has sets of notches at its outer edge (Fig. 20).

The notches cause a pulse to be generated when they pass under the sensor. The pulses are the input to the PCM.

REMOVAL - 4.0L

The Crankshaft Position (CKP) sensor is mounted to the transmission bellhousing at the left/rear side

CRANKSHAFT POSITION SENSOR (Continued)

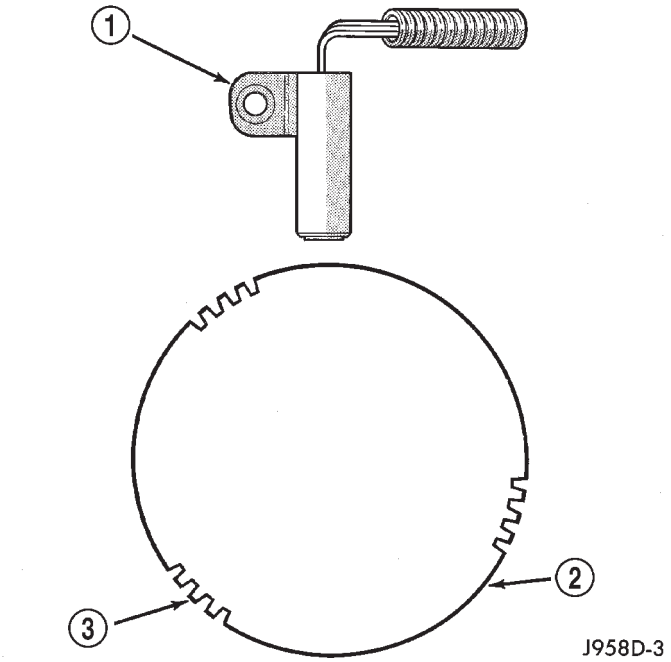

Fig. 19 CKP Sensor Operation—4.0L 6-Cyl. Engine

1 - CRANKSHAFT POSITION SENSOR
2 - FLYWHEEL
3 - FLYWHEEL NOTCHES

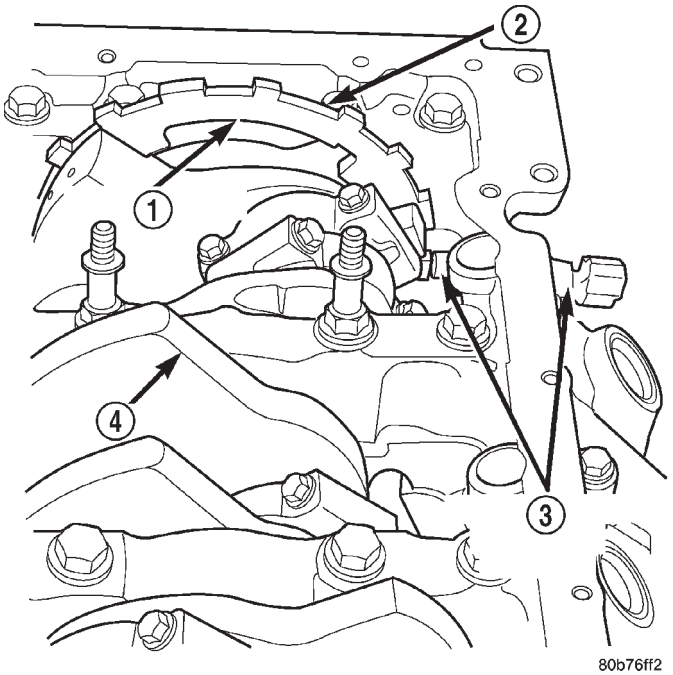

Fig. 20 CKP Sensor Operation and Tonewheel—4.7L V–8 Engine

1 - TONEWHEEL
2 - NOTCHES
3 - CRANKSHAFT POSITION SENSOR
4 - CRANKSHAFT

of the engine block (Fig. 21). The sensor **is adjustable** and is attached with one bolt. A wire shield/router is attached to the sensor (Fig. 21).

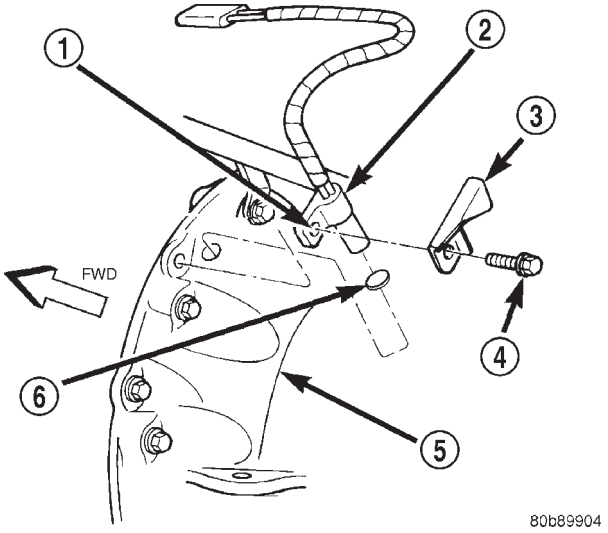

Fig. 21 CKP Sensor—4.0L 6-Cylinder Engine

1 - SLOTTED HOLE
2 - CRANKSHAFT POSITION SENSOR
3 - WIRE SHIELD
4 - MOUNTING BOLT
5 - TRANSMISSION HOUSING
6 - PAPER SPACER

(1) Disconnect sensor pigtail harness (3–way connector) from main engine wiring harness.
(2) Remove sensor mounting bolt.
(3) Remove wire shield and sensor.

REMOVAL - 4.7L

The Crankshaft Position (CKP) sensor is bolted to the side of the engine cylinder block above the starter motor (Fig. 22). It is positioned into a machined hole at the side of the engine block.

(1) Remove starter motor. Refer to Starter Removal/Installation.
(2) Disconnect CKP electrical connector at sensor (Fig. 22).
(3) Remove CKP mounting bolt (Fig. 23).
(4) Carefully pry sensor from cylinder block in a rocking action with two small screwdrivers.
(5) Remove sensor from vehicle.
(6) Check condition of sensor o-ring.

INSTALLATION - 4.0L

The Crankshaft Position (CKP) sensor is mounted to the transmission bellhousing at the left/rear side of the engine block (Fig. 21). The sensor **is adjustable** and is attached with one bolt. A wire shield/router is attached to the sensor (Fig. 21).

CRANKSHAFT POSITION SENSOR (Continued)

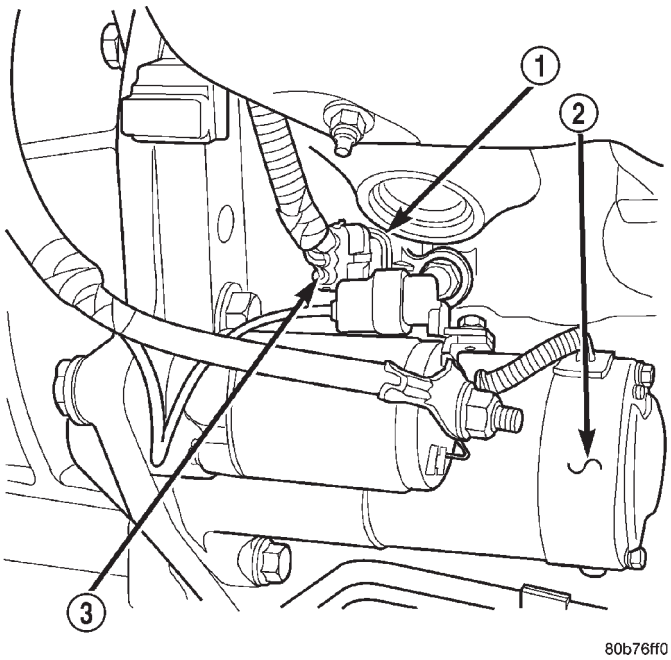

Fig. 22 CKP Sensor Location—4.7L V–8 Engine

1 - CRANKSHAFT POSITION SENSOR
2 - STARTER
3 - ELEC. CONNECTOR

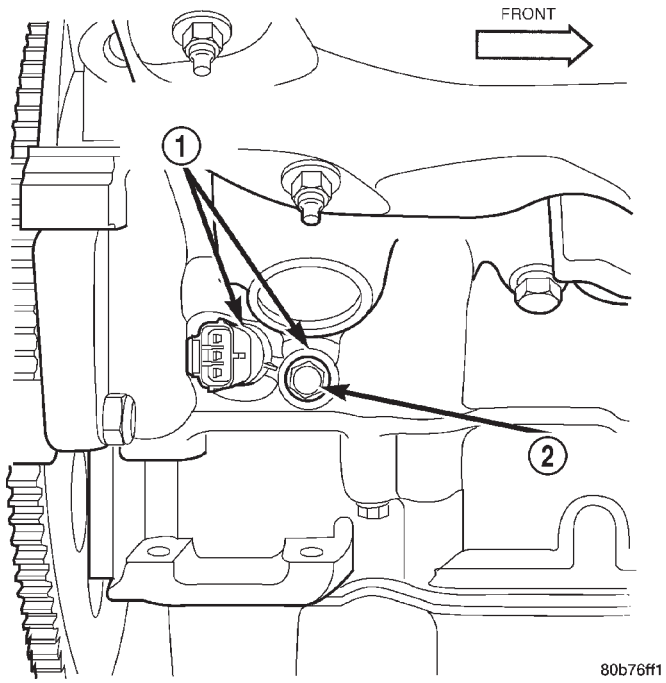

Fig. 23 CKP Sensor Removal/Installation—4.7L V–8 Engine

1 - CRANKSHAFT POSITION SENSOR
2 - MOUNTING BOLT

New replacement sensors will be equipped with a paper spacer glued to bottom of sensor. If installing (returning) a **used** sensor to vehicle, a new paper spacer must be installed to bottom of sensor. This spacer will be ground off the first time engine is started. If spacer is not used, sensor will be broken the first time engine is started.

(1) New Sensors: Be sure paper spacer is installed to bottom of sensor. If not, obtain spacer PN05252229.

(2) Used Sensors: Clean bottom of sensor and install spacer PN05252229.

(3) Install sensor into transmission bellhousing hole.

(4) Position sensor wire shield to sensor (Fig. 21).

(5) Push sensor against flywheel/drive plate. With sensor pushed against flywheel/drive plate, tighten mounting bolt to 7 N·m (60 in. lbs.) torque.

(6) Route sensor wiring harness into wire shield.

(7) Connect sensor pigtail harness electrical connector to main wiring harness.

INSTALLATION - 4.7L

(1) Clean out machined hole in engine block.

(2) Apply a small amount of engine oil to sensor o-ring.

(3) Install sensor into engine block with a slight rocking action. Do not twist sensor into position as damage to o-ring may result.

CAUTION: Before tightening sensor mounting bolt, be sure sensor is completely flush to cylinder block. If sensor is not flush, damage to sensor mounting tang may result.

(4) Install mounting bolt and tighten to 28 N·m (21 ft. lbs.) torque.

(5) Connect electrical connector to sensor.

(6) Install starter motor. Refer to Starter Removal/Installation.

FUEL INJECTOR

DESCRIPTION

A separate fuel injector (Fig. 24) is used for each individual cylinder.

OPERATION

The fuel injectors are electrical solenoids. The injector contains a pintle that closes off an orifice at the nozzle end. When electric current is supplied to the injector, the armature and needle move a short distance against a spring, allowing fuel to flow out the orifice. Because the fuel is under high pressure, a fine spray is developed in the shape of a pencil stream. The spraying action atomizes the fuel, adding it to the air entering the combustion chamber.

FUEL INJECTOR (Continued)

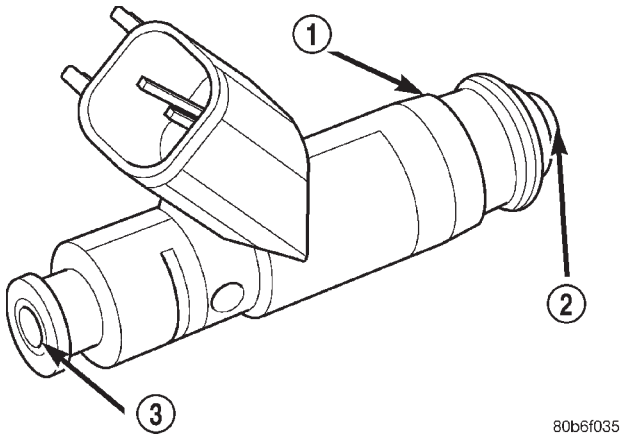

Fig. 24 Fuel Injector—4.0L/4.7L Engines

1 - FUEL INJECTOR
2 - NOZZLE
3 - TOP (FUEL ENTRY)

The top (fuel entry) end of the injector (Fig. 24) is attached into an opening on the fuel rail.

The nozzle (outlet) ends of the injectors are positioned into openings in the intake manifold just above the intake valve ports of the cylinder head. The engine wiring harness connector for each fuel injector is equipped with an attached numerical tag (INJ 1, INJ 2 etc.). This is used to identify each fuel injector.

The injectors are electrically energized, individually and in a sequential order by the Powertrain Control Module (PCM). The PCM will adjust injector pulse width by switching the ground path to each individual injector on and off. Injector pulse width is the period of time that the injector is energized. The PCM will adjust injector pulse width based on various inputs it receives.

Battery voltage is supplied to the injectors through the ASD relay.

The PCM determines injector pulse width based on various inputs.

OPERATION - PCM OUTPUT

The nozzle ends of the injectors are positioned into openings in the intake manifold just above the intake valve ports of the cylinder head. The engine wiring harness connector for each fuel injector is equipped with an attached numerical tag (INJ 1, INJ 2 etc.). This is used to identify each fuel injector with its respective cylinder number.

The injectors are energized individually in a sequential order by the Powertrain Control Module (PCM). The PCM will adjust injector pulse width by switching the ground path to each individual injector on and off. Injector pulse width is the period of time that the injector is energized. The PCM will adjust injector pulse width based on various inputs it receives.

Battery voltage (12 volts +) is supplied to the injectors through the ASD relay. The ASD relay will shutdown the 12 volt power source to the fuel injectors if the PCM senses the ignition is on, but the engine is not running. This occurs after the engine has not been running for approximately 1.8 seconds.

The PCM determines injector on-time (pulse width) based on various inputs.

DIAGNOSIS AND TESTING - FUEL INJECTOR TEST

To perform a complete test of the fuel injectors and their circuitry, use the DRB scan tool and refer to the appropriate Powertrain Diagnostics Procedures manual. To test the injector only, refer to the following:

Disconnect the fuel injector wire harness connector from the injector. The injector is equipped with 2 electrical terminals (pins). Place an ohmmeter across the terminals. Resistance reading should be approximately 12 ohms ±1.2 ohms at 20°C (68°F).

REMOVAL

WARNING: THE FUEL SYSTEM IS UNDER CONSTANT PRESSURE EVEN WITH ENGINE OFF. BEFORE SERVICING FUEL INJECTOR(S), FUEL SYSTEM PRESSURE MUST BE RELEASED.

To remove one or more fuel injectors, the fuel rail assembly must be removed from engine.

(1) Perform Fuel System Pressure Release Procedure.

(2) Remove fuel injector rail. Refer to Fuel Injector Rail Removal/Installation.

(3) Remove clip(s) retaining injector(s) to fuel rail (Fig. 25).

(4) Remove injector(s) from fuel rail.

INSTALLATION

(1) Apply a small amount of engine oil to each fuel injector o-ring. This will help in fuel rail installation.

(2) Install injector(s) and injector clip(s) to fuel rail.

(3) Install fuel rail assembly. Refer to Fuel Injector Rail Removal/Installation.

(4) Start engine and check for leaks.

FUEL PUMP RELAY

DESCRIPTION

The 5–pin, 12–volt, fuel pump relay is located in the Power Distribution Center (PDC). Refer to the label on the PDC cover for relay location.

FUEL PUMP RELAY (Continued)

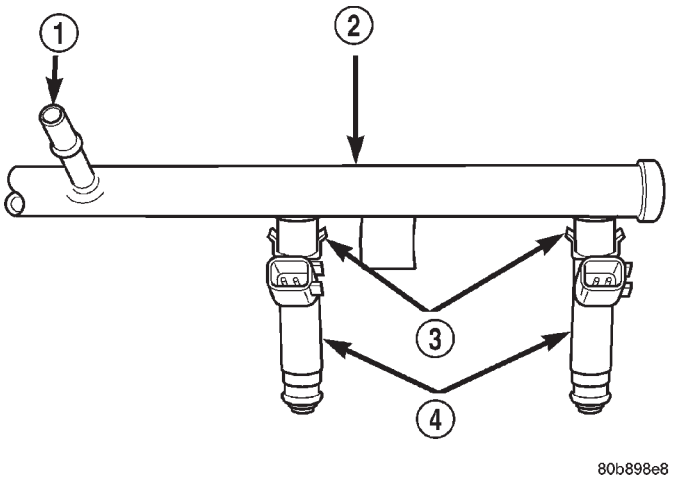

Fig. 25 Fuel Injector Mounting—Typical (4.7L V-8 Engine Shown)

1 - INLET FITTING
2 - FUEL INJECTOR RAIL
3 - CLIP
4 - FUEL INJECTOR

OPERATION

The Powertrain Control Module (PCM) energizes the electric fuel pump through the fuel pump relay. The fuel pump relay is energized by first applying battery voltage to it when the ignition key is turned ON, and then applying a ground signal to the relay from the PCM.

Whenever the ignition key is turned ON, the electric fuel pump will operate. But, the PCM will shutdown the ground circuit to the fuel pump relay in approximately 1–3 seconds unless the engine is operating or the starter motor is engaged.

IDLE AIR CONTROL MOTOR

DESCRIPTION

The IAC stepper motor is mounted to the throttle body, and regulates the amount of air bypassing the control of the throttle plate. As engine loads and ambient temperatures change, engine rpm changes. A pintle on the IAC stepper motor protrudes into a passage in the throttle body, controlling air flow through the passage. The IAC is controlled by the Powertrain Control Module (PCM) to maintain the target engine idle speed.

OPERATION

At idle, engine speed can be increased by retracting the IAC motor pintle and allowing more air to pass through the port, or it can be decreased by restricting the passage with the pintle and diminishing the amount of air bypassing the throttle plate.

The IAC is called a stepper motor because it is moved (rotated) in steps, or increments. Opening the IAC opens an air passage around the throttle blade which increases RPM.

The PCM uses the IAC motor to control idle speed (along with timing) and to reach a desired MAP during decel (keep engine from stalling).

The IAC motor has 4 wires with 4 circuits. Two of the wires are for 12 volts and ground to supply electrical current to the motor windings to operate the stepper motor in one direction. The other 2 wires are also for 12 volts and ground to supply electrical current to operate the stepper motor in the opposite direction.

To make the IAC go in the opposite direction, the PCM just reverses polarity on both windings. If only 1 wire is open, the IAC can only be moved 1 step (increment) in either direction. To keep the IAC motor in position when no movement is needed, the PCM will energize both windings at the same time. This locks the IAC motor in place.

In the IAC motor system, the PCM will count every step that the motor is moved. This allows the PCM to determine the motor pintle position. If the memory is cleared, the PCM no longer knows the position of the pintle. So at the first key ON, the PCM drives the IAC motor closed, regardless of where it was before. This zeros the counter. From this point the PCM will back out the IAC motor and keep track of its position again.

When engine rpm is above idle speed, the IAC is used for the following:

- Off-idle dashpot (throttle blade will close quickly but idle speed will not stop quickly)
- Deceleration air flow control
- A/C compressor load control (also opens the passage slightly before the compressor is engaged so that the engine rpm does not dip down when the compressor engages)
- Power steering load control

The PCM can control polarity of the circuit to control direction of the stepper motor.

IAC Stepper Motor Program: The PCM is also equipped with a memory program that records the number of steps the IAC stepper motor most recently advanced to during a certain set of parameters. For example: The PCM was attempting to maintain a 1000 rpm target during a cold start-up cycle. The last recorded number of steps for that may have been 125. That value would be recorded in the memory cell so that the next time the PCM recognizes the identical conditions, the PCM recalls that 125 steps were required to maintain the target. This program allows for greater customer satisfaction due to greater control of engine idle.

IDLE AIR CONTROL MOTOR (Continued)

Another function of the memory program, which occurs when the power steering switch (if equipped), or the A/C request circuit, requires that the IAC stepper motor control engine rpm, is the recording of the last targeted steps into the memory cell. The PCM can anticipate A/C compressor loads. This is accomplished by delaying compressor operation for approximately 0.5 seconds until the PCM moves the IAC stepper motor to the recorded steps that were loaded into the memory cell. Using this program helps eliminate idle-quality changes as loads change. Finally, the PCM incorporates a "No-Load" engine speed limiter of approximately 1800 - 2000 rpm, when it recognizes that the TPS is indicating an idle signal and IAC motor cannot maintain engine idle.

A (factory adjusted) set screw is used to mechanically limit the position of the throttle body throttle plate. **Never attempt to adjust the engine idle speed using this screw.** All idle speed functions are controlled by the IAC motor through the PCM.

REMOVAL - 4.0L

The IAC motor is located on the throttle body.

(1) Remove air duct and air resonator box at throttle body.

(2) Disconnect electrical connector from IAC motor (Fig. 38).

(3) Remove two mounting bolts (screws) (Fig. 26).

(4) Remove IAC motor from throttle body.

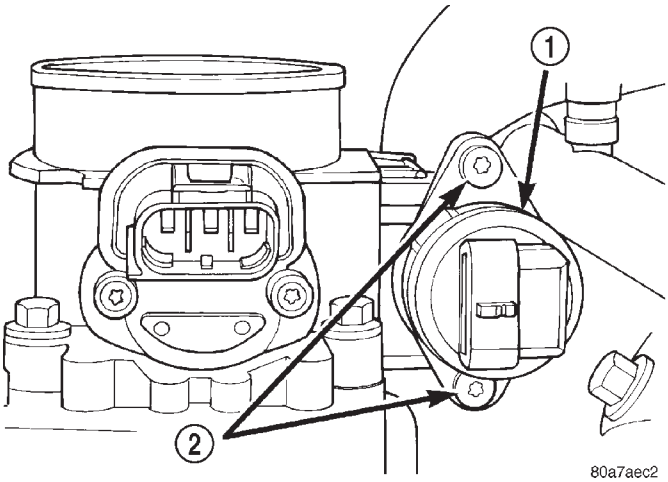

Fig. 26 Mounting Bolts (Screws)—IAC

1 - IDLE AIR CONTROL MOTOR
2 - MOUNTING SCREWS

REMOVAL - 4.7L

(1) Remove air duct and air resonator box at throttle body.

(2) Disconnect electrical connector from IAC motor (Fig. 34).

(3) Remove two mounting bolts (screws) (Fig. 40).

(4) Remove IAC motor from throttle body.

INSTALLATION - 4.0L

The IAC motor is located on the throttle body.

(1) Install IAC motor to throttle body.

(2) Install and tighten two mounting bolts (screws) to 7 N·m (60 in. lbs.) torque.

(3) Install electrical connector.

(4) Install air cleaner duct/air box to throttle body.

INSTALLATION - 4.7L

(1) Install IAC motor to throttle body.

(2) Install and tighten two mounting bolts (screws) to 7 N·m (60 in. lbs.) torque.

(3) Install electrical connector.

(4) Install air duct/air box to throttle body.

INTAKE AIR TEMPERATURE SENSOR

DESCRIPTION

The 2–wire Intake Manifold Air Temperature (IAT) sensor is installed in the intake manifold with the sensor element extending into the air stream.

The IAT sensor is a two-wire Negative Thermal Coefficient (NTC) sensor. Meaning, as intake manifold temperature increases, resistance (voltage) in the sensor decreases. As temperature decreases, resistance (voltage) in the sensor increases.

OPERATION

The IAT sensor provides an input voltage to the Powertrain Control Module (PCM) indicating the density of the air entering the intake manifold based upon intake manifold temperature. At key-on, a 5–volt power circuit is supplied to the sensor from the PCM. The sensor is grounded at the PCM through a low-noise, sensor-return circuit.

The PCM uses this input to calculate the following:

- Injector pulse-width
- Adjustment of spark timing (to help prevent spark knock with high intake manifold air-charge temperatures)

The resistance values of the IAT sensor is the same as for the Engine Coolant Temperature (ECT) sensor.

REMOVAL - 4.0L

The Intake Manifold Air Temperature (IAT) sensor is installed into the intake manifold plenum near the front of the throttle body (Fig. 27).

(1) Disconnect electrical connector from sensor.

(2) Remove sensor from intake manifold.

INTAKE AIR TEMPERATURE SENSOR (Continued)

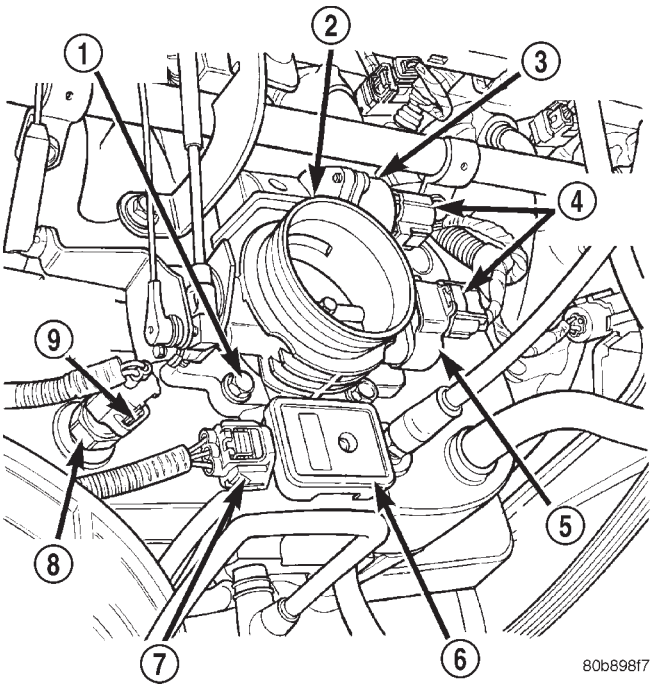

Fig. 27 Intake Manifold Air Sensor Location—4.0L Engine

1 - MOUNTING BOLTS (4)
2 - THROTTLE BODY
3 - IAC MOTOR
4 - ELEC. CONN.
5 - TPS
6 - MAP SENSOR
7 - ELEC. CONN.
8 - IAT SENSOR
9 - ELEC. CONN.

REMOVAL - 4.7L

(1) Disconnect electrical connector from sensor.
(2) Remove sensor from intake manifold (Fig. 28).

INSTALLATION - 4.0L

The Intake Manifold Air Temperature (IAT) sensor is installed into the intake manifold plenum near the front of the throttle body (Fig. 27).

(1) Install sensor into intake manifold. Tighten sensor to 28 N·m (20 ft. lbs.) torque.
(2) Connect electrical connector to sensor.

INSTALLATION - 4.7L

(1) Install sensor into intake manifold. Tighten sensor to 28 N·m (20 ft. lbs.) torque.
(2) Connect electrical connector to sensor.

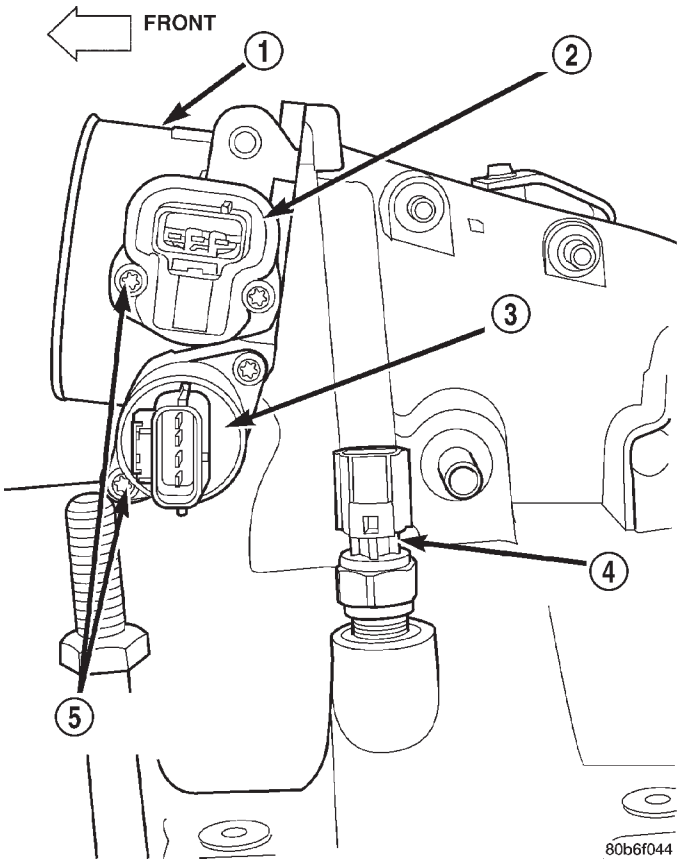

Fig. 28 Intake Manifold Air Sensor Location—4.7L V-8 Engine

1 - THROTTLE BODY
2 - TPS
3 - IAC MOTOR
4 - IAT SENSOR
5 - MOUNTING SCREWS

MAP SENSOR

DESCRIPTION

On the 4.0L six-cylinder engine the MAP sensor is mounted to the engine throttle body. On the 4.7L V-8 engine the MAP sensor is mounted to front of the intake manifold.

OPERATION

The MAP sensor is used as an input to the Powertrain Control Module (PCM). It contains a silicon based sensing unit to provide data on the manifold vacuum that draws the air/fuel mixture into the combustion chamber. The PCM requires this information to determine injector pulse width and spark advance.

MAP SENSOR (Continued)

When manifold absolute pressure (MAP) equals Barometric pressure, the pulse width will be at maximum.

A 5 volt reference is supplied from the PCM and returns a voltage signal to the PCM that reflects manifold pressure. The zero pressure reading is 0.5V and full scale is 4.5V. For a pressure swing of 0–15 psi, the voltage changes 4.0V. To operate the sensor, it is supplied a regulated 4.8 to 5.1 volts. Ground is provided through the low-noise, sensor return circuit at the PCM.

The MAP sensor input is the number one contributor to fuel injector pulse width. The most important function of the MAP sensor is to determine barometric pressure. The PCM needs to know if the vehicle is at sea level or at a higher altitude, because the air density changes with altitude. It will also help to correct for varying barometric pressure. Barometric pressure and altitude have a direct inverse correlation; as altitude goes up, barometric goes down. At key-on, the PCM powers up and looks at MAP voltage, and based upon the voltage it sees, it knows the current barometric pressure (relative to altitude). Once the engine starts, the PCM looks at the voltage again, continuously every 12 milliseconds, and compares the current voltage to what it was at key-on. The difference between current voltage and what it was at key-on, is manifold vacuum.

During key-on (engine not running) the sensor reads (updates) barometric pressure. A normal range can be obtained by monitoring a known good sensor.

As the altitude increases, the air becomes thinner (less oxygen). If a vehicle is started and driven to a very different altitude than where it was at key-on, the barometric pressure needs to be updated. Any time the PCM sees Wide Open Throttle (WOT), based upon Throttle Position Sensor (TPS) angle and RPM, it will update barometric pressure in the MAP memory cell. With periodic updates, the PCM can make its calculations more effectively.

The PCM uses the MAP sensor input to aid in calculating the following:

- Manifold pressure
- Barometric pressure
- Engine load
- Injector pulse-width
- Spark-advance programs
- Shift-point strategies (certain automatic transmissions only)
- Idle speed
- Decel fuel shutoff

The MAP sensor signal is provided from a single piezoresistive element located in the center of a diaphragm. The element and diaphragm are both made of silicone. As manifold pressure changes, the diaphragm moves causing the element to deflect, which stresses the silicone. When silicone is exposed to stress, its resistance changes. As manifold vacuum increases, the MAP sensor input voltage decreases proportionally. The sensor also contains electronics that condition the signal and provide temperature compensation.

The PCM recognizes a decrease in manifold pressure by monitoring a decrease in voltage from the reading stored in the barometric pressure memory cell. The MAP sensor is a linear sensor; meaning as pressure changes, voltage changes proportionately. The range of voltage output from the sensor is usually between 4.6 volts at sea level to as low as 0.3 volts at 26 in. of Hg. Barometric pressure is the pressure exerted by the atmosphere upon an object. At sea level on a standard day, no storm, barometric pressure is approximately 29.92 in Hg. For every 100 feet of altitude, barometric pressure drops .10 in. Hg. If a storm goes through it can change barometric pressure from what should be present for that altitude. You should know what the average pressure and corresponding barometric pressure is for your area.

REMOVAL - 4.0L

The MAP sensor is mounted to the side of the throttle body (Fig. 38). An L-shaped rubber fitting is used to connect the MAP sensor to throttle body (Fig. 29).

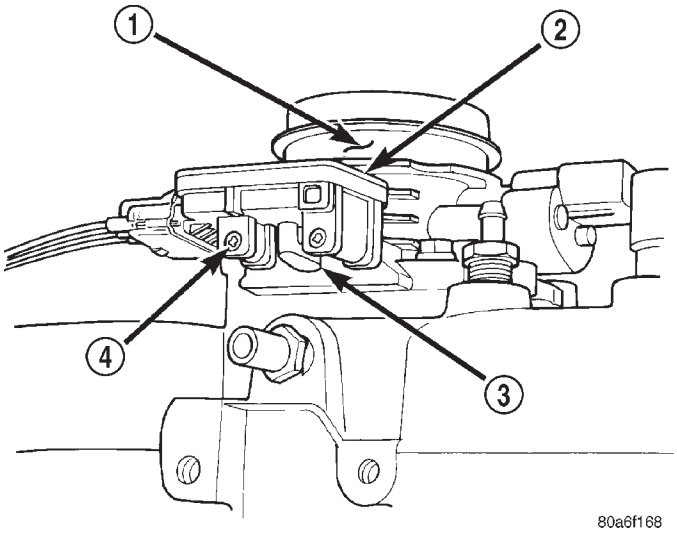

Fig. 29 Rubber L-Shaped Fitting—MAP Sensor-to-Throttle Body—4.0L Engine

1 - THROTTLE BODY
2 - MAP SENSOR
3 - RUBBER FITTING
4 - MOUNTING SCREWS (2)

(1) Remove air cleaner duct and air resonator box at throttle body.

MAP SENSOR (Continued)

(2) Remove two MAP sensor mounting bolts (screws) (Fig. 29).

(3) While removing MAP sensor, slide the rubber L-shaped fitting (Fig. 29) from the throttle body.

(4) Remove rubber L-shaped fitting from MAP sensor.

REMOVAL - 4.7L

The MAP sensor is located on the front of the intake manifold (Fig. 30). An o-ring seals the sensor to the intake manifold.

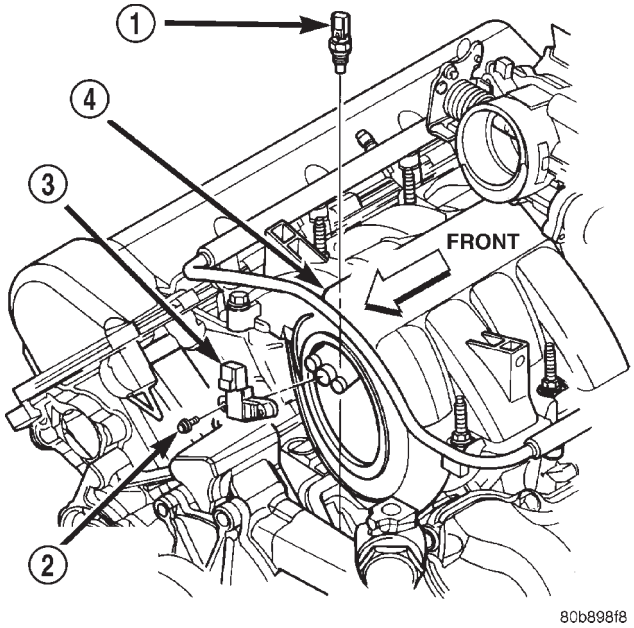

Fig. 30 MAP and ECT Sensor Locations—4.7L V–8 Engine

1 - ECT SENSOR
2 - MOUNTING BOLTS (2)
3 - MAP SENSOR
4 - INTAKE MANIFOLD

(1) Disconnect electrical connector at sensor.

(2) Clean area around MAP sensor.

(3) Remove 2 sensor mounting bolts (Fig. 30).

(4) Remove MAP sensor from intake manifold.

INSTALLATION - 4.0L

The MAP sensor is mounted to the side of the throttle body (Fig. 38). An L-shaped rubber fitting is used to connect the MAP sensor to throttle body (Fig. 29).

(1) Install rubber L-shaped fitting to MAP sensor.

(2) Position sensor to throttle body while guiding rubber fitting over throttle body vacuum nipple.

(3) Install MAP sensor mounting bolts (screws). Tighten screws to 3 N·m (25 in. lbs.) torque.

(4) Install air cleanerduct/air box.

INSTALLATION - 4.7L

The MAP sensor is located on the front of the intake manifold (Fig. 30). An o-ring seals the sensor to the intake manifold.

(1) Clean MAP sensor mounting hole at intake manifold.

(2) Check MAP sensor o-ring seal for cuts or tears.

(3) Position sensor into manifold.

(4) Install MAP sensor mounting bolts (screws). Tighten screws to 3 N·m (25 in. lbs.) torque.

(5) Connect electrical connector.

O2S HEATER RELAY

DESCRIPTION

The 2 oxygen (O2) sensor heater relays (upstream and downstream) are located in the Powertrain Distribution Center (PDC).

OPERATION

Engines equipped with the California (NAE) Emissions Package use **four O2 sensors.**

Two of the four sensor heater elements (upstream sensors 1/1 and 2/1) are controlled by the upstream heater relay through output signals from the Powertrain Control Module (PCM).

The other two heater elements (downstream sensors 1/2 and 2/2) are controlled by the downstream heater relay through output signals from the PCM.

To avoid a large simultaneous current surge, power is delayed to the 2 downstream heater elements by the PCM for approximately 2 seconds.

REMOVAL

(1) Remove PDC cover.

(2) Remove relay from PDC.

(3) Check condition of relay terminals and PDC connector terminals for damage or corrosion. Repair if necessary before installing relay.

(4) Check for pin height (pin height should be the same for all terminals within the PDC connector). Repair if necessary before installing relay.

INSTALLATION

(1) Install relay to PDC.

(2) Install cover to PDC.

O2S SENSOR

DESCRIPTION

The Oxygen Sensors (O2S) are attached to, and protrude into the vehicle exhaust system. Depending on the emission package, the vehicle may use a total of either 2 or 4 sensors.

O2S SENSOR (Continued)

Federal Emissions Package: Two sensors are used: upstream (referred to as 1/1) and downstream (referred to as 1/2). With this emission package, the upstream sensor (1/1) is located just before the main catalytic convertor. The downstream sensor (1/2) is located just after the main catalytic convertor.

4.7L V-8 With California Emissions Package: On this emissions package, 4 sensors are used: 2 upstream (referred to as 1/1 and 2/1) and 2 downstream (referred to as 1/2 and 2/2). With this emission package, the right upstream sensor (2/1) is located in the right exhaust downpipe just before the mini-catalytic convertor. The left upstream sensor (1/1) is located in the left exhaust downpipe just before the mini-catalytic convertor. The right downstream sensor (2/2) is located in the right exhaust downpipe just after the mini-catalytic convertor, and before the main catalytic convertor. The left downstream sensor (1/2) is located in the left exhaust downpipe just after the mini-catalytic convertor, and before the main catalytic convertor.

4.0L 6–Cylinder With California Emissions Package: On this emissions package, 4 sensors are used: 2 upstream (referred to as 1/1 and 2/1) and 2 downstream (referred to as 1/2 and 2/2). With this emission package, the rear/upper upstream sensor (2/1) is located in the exhaust downpipe just before the rear mini-catalytic convertor. The front/upper upstream sensor (1/1) is located in the exhaust downpipe just before the front mini-catalytic convertor. The rear/lower downstream sensor (2/2) is located in the exhaust downpipe just after the rear mini-catalytic convertor, and before the main catalytic convertor. The front/lower downstream sensor (1/2) is located in the exhaust downpipe just after the front mini-catalytic convertor, and before the main catalytic convertor.

OPERATION

An O2 sensor is a galvanic battery that provides the PCM with a voltage signal (0-1 volt) inversely proportional to the amount of oxygen in the exhaust. In other words, if the oxygen content is low, the voltage output is high; if the oxygen content is high the output voltage is low. The PCM uses this information to adjust injector pulse-width to achieve the 14.7–to–1 air/fuel ratio necessary for proper engine operation and to control emissions.

The O2 sensor must have a source of oxygen from outside of the exhaust stream for comparison. Current O2 sensors receive their fresh oxygen (outside air) supply through the wire harness. This is why it is important to never solder an O2 sensor connector, or pack the connector with grease.

Four wires (circuits) are used on each O2 sensor: a 12–volt feed circuit for the sensor heating element; a ground circuit for the heater element; a low-noise sensor return circuit to the PCM, and an input circuit from the sensor back to the PCM to detect sensor operation.

Oxygen Sensor Heaters/Heater Relays: Depending on the emissions package, the heating elements within the sensors will be supplied voltage from either the ASD relay, or 2 separate oxygen sensor relays. Refer to Wiring Diagrams to determine which relays are used.

The O2 sensor uses a Positive Thermal Co-efficient (PTC) heater element. As temperature increases, resistance increases. At ambient temperatures around 70°F, the resistance of the heating element is approximately 4.5 ohms on 4.0L engines. It is approximately 13.5 ohms on the 4.7L engine. As the sensor's temperature increases, resistance in the heater element increases. This allows the heater to maintain the optimum operating temperature of approximately 930°-1100°F (500°-600° C). Although the sensors operate the same, there are physical differences, due to the environment that they operate in, that keep them from being interchangeable.

Maintaining correct sensor temperature at all times allows the system to enter into closed loop operation sooner. Also, it allows the system to remain in closed loop operation during periods of extended idle.

In Closed Loop operation, the PCM monitors certain O2 sensor input(s) along with other inputs, and adjusts the injector pulse width accordingly. During Open Loop operation, the PCM ignores the O2 sensor input. The PCM adjusts injector pulse width based on preprogrammed (fixed) values and inputs from other sensors.

Upstream Sensor (Non-California Emissions): The upstream sensor (1/1) provides an input voltage to the PCM. The input tells the PCM the oxygen content of the exhaust gas. The PCM uses this information to fine tune fuel delivery to maintain the correct oxygen content at the downstream oxygen sensor. The PCM will change the air/fuel ratio until the upstream sensor inputs a voltage that the PCM has determined will make the downstream sensor output (oxygen content) correct.

The upstream oxygen sensor also provides an input to determine catalytic convertor efficiency.

Downstream Sensor (Non-California Emissions): The downstream oxygen sensor (1/2) is also used to determine the correct air-fuel ratio. As the oxygen content changes at the downstream sensor, the PCM calculates how much air-fuel ratio change is

O2S SENSOR (Continued)

required. The PCM then looks at the upstream oxygen sensor voltage and changes fuel delivery until the upstream sensor voltage changes enough to correct the downstream sensor voltage (oxygen content).

The downstream oxygen sensor also provides an input to determine catalytic convertor efficiency.

Upstream Sensors (California Engines): Two upstream sensors are used (1/1 and 2/1). The 1/1 sensor is the first sensor to receive exhaust gases from the #1 cylinder. They provide an input voltage to the PCM. The input tells the PCM the oxygen content of the exhaust gas. The PCM uses this information to fine tune fuel delivery to maintain the correct oxygen content at the downstream oxygen sensors. The PCM will change the air/fuel ratio until the upstream sensors input a voltage that the PCM has determined will make the downstream sensors output (oxygen content) correct.

The upstream oxygen sensors also provide an input to determine mini-catalyst efficiency. Main catalytic convertor efficiency is not calculated with this package.

Downstream Sensors (California Engines): Two downstream sensors are used (1/2 and 2/2). The downstream sensors are used to determine the correct air-fuel ratio. As the oxygen content changes at the downstream sensor, the PCM calculates how much air-fuel ratio change is required. The PCM then looks at the upstream oxygen sensor voltage, and changes fuel delivery until the upstream sensor voltage changes enough to correct the downstream sensor voltage (oxygen content).

The downstream oxygen sensors also provide an input to determine mini-catalyst efficiency. Main catalytic convertor efficiency is not calculated with this package.

Engines equipped with either a downstream sensor(s), or a post-catalytic sensor, will monitor catalytic convertor efficiency. If efficiency is below emission standards, the Malfunction Indicator Lamp (MIL) will be illuminated and a Diagnostic Trouble Code (DTC) will be set. Refer to Monitored Systems in Emission Control Systems for additional information.

REMOVAL

Never apply any type of grease to the oxygen sensor electrical connector, or attempt any soldering of the sensor wiring harness. For sensor operation, it must have a comparison source of oxygen from outside the exhaust system. This fresh air is supplied to the sensor through its pigtail wiring harness.

Oxygen sensor (O2S) locations are shown in (Fig. 31) and (Fig. 32).

WARNING: THE EXHAUST MANIFOLD, EXHAUST PIPES AND CATALYTIC CONVERTER(S) BECOME VERY HOT DURING ENGINE OPERATION. ALLOW ENGINE TO COOL BEFORE REMOVING OXYGEN SENSOR.

(1) Raise and support vehicle.

(2) Disconnect O2S pigtail harness from main wiring harness.

(3) If equipped, disconnect sensor wire harness mounting clips from engine or body.

CAUTION: When disconnecting sensor electrical connector, do not pull directly on wire going into sensor.

(4) Remove O2S sensor with an oxygen sensor removal and installation tool.

INSTALLATION

Threads of new oxygen sensors are factory coated with anti-seize compound to aid in removal. **DO NOT add any additional anti-seize compound to threads of a new oxygen sensor.**

(1) Install O2S sensor. Tighten to 30 N·m (22 ft. lbs.) torque.

(2) Connect O2S sensor wire connector to main wiring harness.

(3) If equipped, connect sensor wire harness mounting clips to engine or body. **When Equipped: The O2S pigtail harness must be clipped and/or bolted back to their original positions on engine or body to prevent mechanical damage to wiring.**.

(4) Lower vehicle.

THROTTLE BODY (Continued)

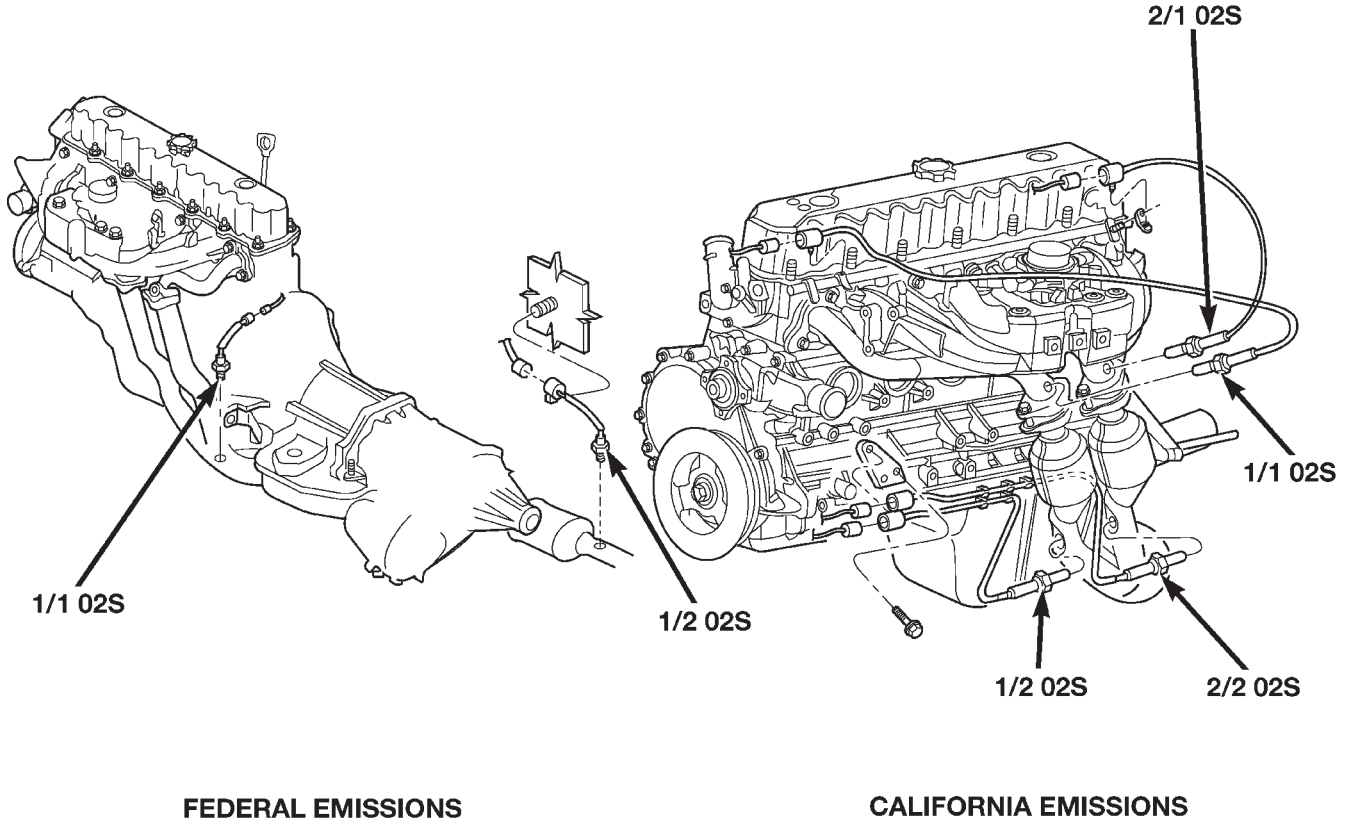

Fig. 31 Oxygen Sensor Locations—4.0L Engine

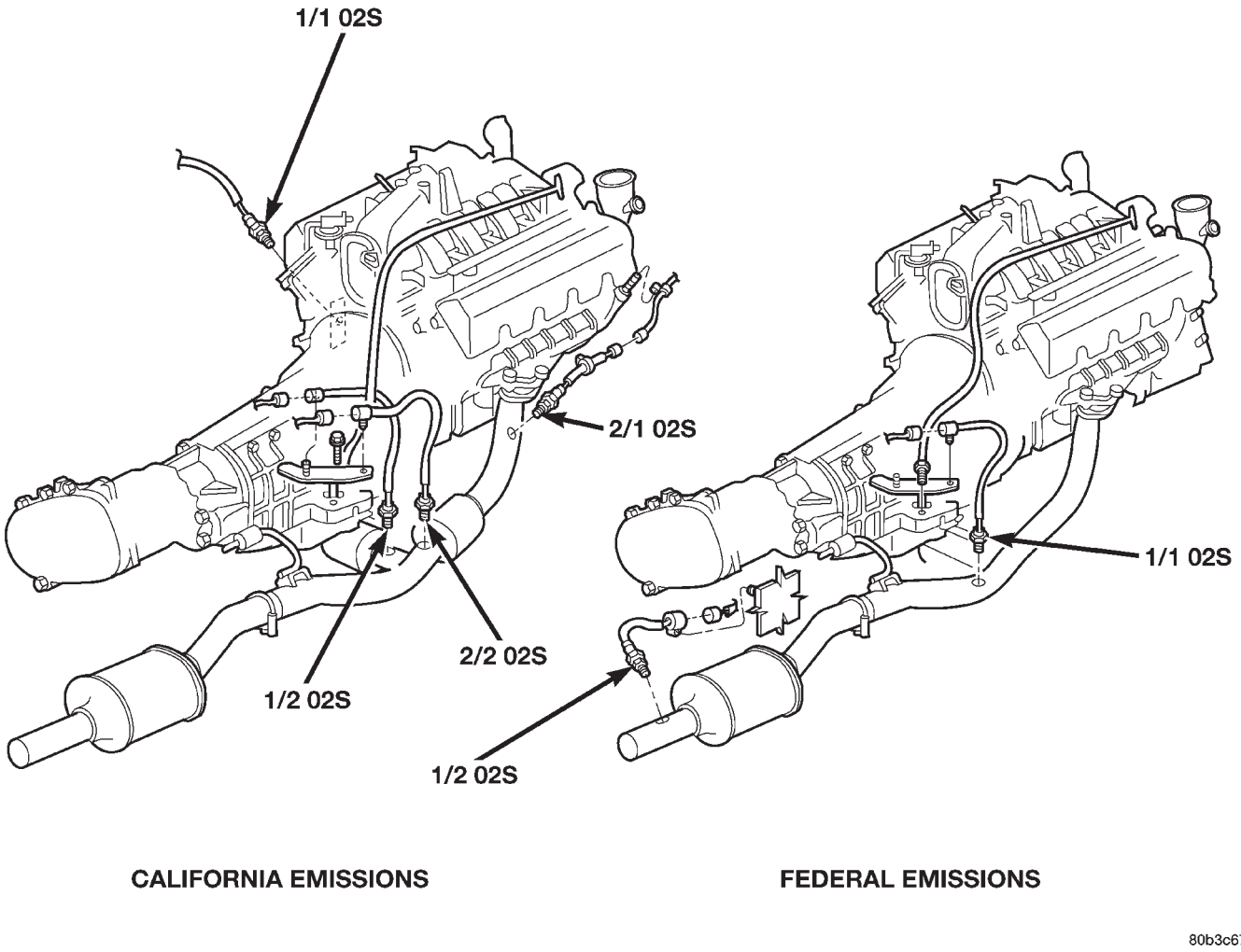

Fig. 32 Oxygen Sensor Locations—4.7L V-8 Engine

THROTTLE BODY

DESCRIPTION

The throttle body is located on the intake manifold. Fuel does not enter the intake manifold through the throttle body. Fuel is sprayed into the manifold by the fuel injectors.

OPERATION

Filtered air from the air cleaner enters the intake manifold through the throttle body. The throttle body contains an air control passage controlled by an Idle Air Control (IAC) motor. The air control passage is used to supply air for idle conditions. A throttle valve (plate) is used to supply air for above idle conditions.

Certain sensors are attached to the throttle body. The accelerator pedal cable, speed control cable and transmission control cable (when equipped) are connected to the throttle body linkage arm.

A (factory adjusted) set screw is used to mechanically limit the position of the throttle body throttle plate. **Never attempt to adjust the engine idle speed using this screw.** All idle speed functions are controlled by the PCM.

REMOVAL - 4.0L

A (factory adjusted) set screw is used to mechanically limit the position of the throttle body throttle plate. **Never attempt to adjust the engine idle speed using this screw.** All idle speed functions are controlled by the Powertrain Control Module (PCM).

(1) Remove air cleaner duct and air resonator box at throttle body.

(2) Disconnect throttle body electrical connectors at MAP sensor, IAC motor and TPS (Fig. 33).

(3) Remove all control cables from throttle body (lever) arm. Refer to Accelerator Pedal and Throttle Cable.

(4) Remove four throttle body mounting bolts.

THROTTLE BODY (Continued)

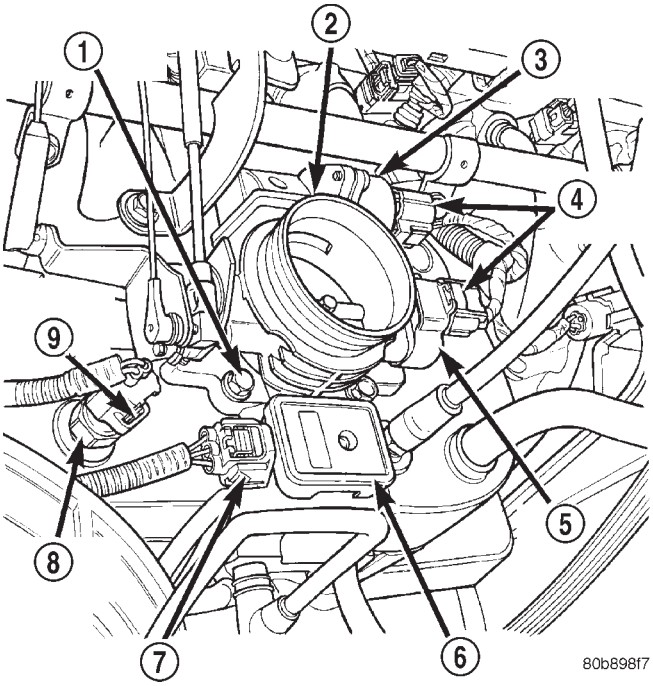

Fig. 33 Throttle Body and Sensor Locations—4.0L Engine

1 - MOUNTING BOLTS (4)
2 - THROTTLE BODY
3 - IAC MOTOR
4 - ELEC. CONN.
5 - TPS
6 - MAP SENSOR
7 - ELEC. CONN.
8 - IAT SENSOR
9 - ELEC. CONN.

(5) Remove throttle body from intake manifold.

(6) Discard old throttle body-to-intake manifold gasket.

REMOVAL - 4.7L

(1) Remove the air duct and air resonator box at throttle body.

(2) Disconnect throttle body electrical connectors at IAC motor and TPS (Fig. 34).

(3) Remove vacuum line at throttle body.

(4) Remove all control cables from throttle body (lever) arm. Refer to Accelerator Pedal and Throttle Cable.

(5) Remove three throttle body mounting bolts (Fig. 34).

(6) Remove throttle body from intake manifold.

INSTALLATION - 4.0L

A (factory adjusted) set screw is used to mechanically limit the position of the throttle body throttle plate. **Never attempt to adjust the engine idle speed using this screw.** All idle speed functions are controlled by the Powertrain Control Module (PCM).

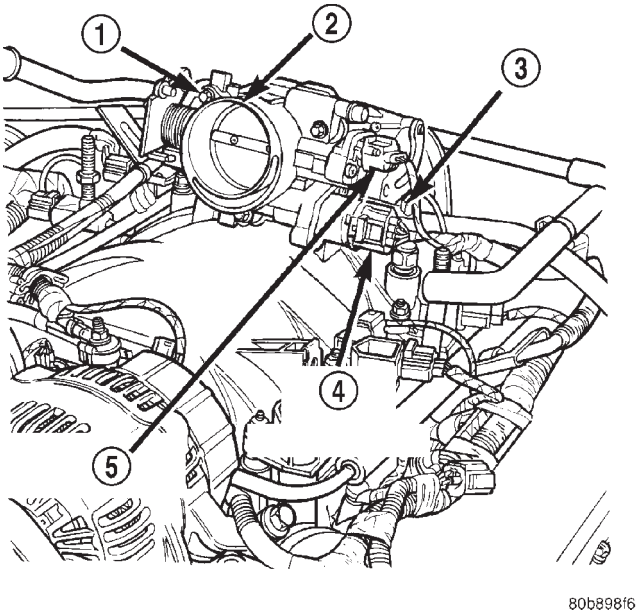

Fig. 34 Throttle Body, Sensors and Electrical Connectors—4.7L V-8 Engine

1 - MOUNTING BOLTS (3)
2 - THROTTLE BODY
3 - IAT SENSOR CONNECTOR
4 - IAC MOTOR CONNECTOR
5 - TPS CONNECTOR

(1) Clean the mating surfaces of the throttle body and the intake manifold.

(2) Install new throttle body-to-intake manifold gasket.

(3) Install throttle body to intake manifold.

(4) Install four mounting bolts. Tighten bolts to 11 N·m (100 in. lbs.) torque.

(5) Install control cables.

(6) Install electrical connectors.

(7) Install air duct and air box at throttle body.

INSTALLATION - 4.7L

(1) Clean throttle body-to-intake manifold o-ring.

(2) Clean mating surfaces of throttle body and intake manifold.

(3) Install throttle body to intake manifold by positioning throttle body to manifold alignment pins.

(4) Install three mounting bolts. Tighten bolts to 12 N·m (105 in. lbs.) torque.

(5) Install control cables.

(6) Install vacuum line to throttle body.

(7) Install electrical connectors.

(8) Install air duct/air box at throttle body.

THROTTLE CONTROL CABLE

REMOVAL - 4.0L

CAUTION: Be careful not to damage or kink the cable core wire (within the cable sheathing) while servicing accelerator pedal or throttle cable.

(1) From inside vehicle, hold up accelerator pedal. Remove plastic cable retainer (clip) and throttle cable core wire from upper end of pedal arm (Fig. 16). Plastic cable retainer (clip) snaps into pedal arm.

(2) Remove cable core wire at pedal arm.

(3) From inside vehicle, remove clip holding cable to dashpanel (Fig. 16).

(4) Remove cable housing from dash panel and pull into engine compartment.

(5) Remove (unsnap) cable from routing clips on engine valve cover.

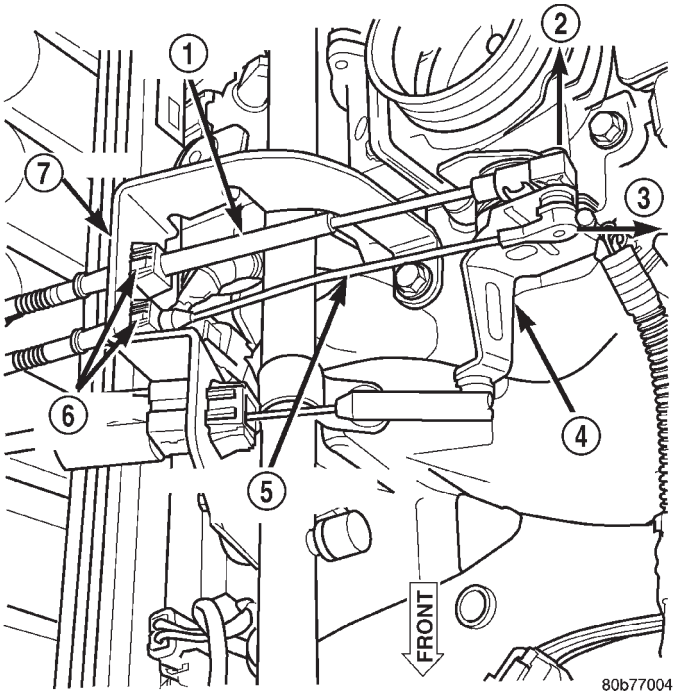

Fig. 35 Throttle (Accelerator) Cable at Throttle Body—4.0L Engine

1 - ACCELERATOR CABLE
2 - OFF
3 - OFF
4 - THROTTLE BODY BELLCRANK
5 - SPEED CONTROL CABLE
6 - RELEASE TABS
7 - BRACKET

(6) Remove cable connector at throttle body bellcrank ball by unsnapping rearward (Fig. 35).

(7) Remove throttle cable from bracket by compressing release tabs (Fig. 35) and pushing cable through hole in bracket.

(8) Remove throttle cable from vehicle.

REMOVAL - 4.7L

CAUTION: Be careful not to damage or kink the cable core wire (within the cable sheathing) while servicing accelerator pedal or throttle cable.

(1) From inside vehicle, hold up accelerator pedal. Remove plastic cable retainer (clip) and throttle cable core wire from upper end of pedal arm (Fig. 16). Plastic cable retainer (clip) snaps into pedal arm.

(2) Remove cable core wire at pedal arm.

(3) From inside vehicle, remove clip holding cable to dashpanel (Fig. 16).

(4) Remove air box at throttle body.

(5) Unsnap cable from plenum routing clip.

(6) Remove cable housing from dash panel and pull into engine compartment.

(7) Using finger pressure only, disconnect accelerator cable connector at throttle body bellcrank pin by pushing connector off bellcrank pin towards front of vehicle (Fig. 36). **DO NOT try to pull connector off perpendicular to the bellcrank pin. Connector will be broken.**

(8) Lift accelerator cable from top of cable cam (Fig. 36).

(9) Press tab (Fig. 37) to release plastic cable mount from bracket. **Press on tab only enough to release cable from bracket. If tab is pressed too much, it will be broken.** Slide plastic mount (Fig. 37) towards passenger side of vehicle to remove cable from bracket.

(10) Remove throttle cable from vehicle.

INSTALLATION – 4.0L

(1) Slide throttle cable through hole in bracket until release tabs lock into bracket.

(2) Connect cable ball end to throttle body bellcrank ball (snaps on).

(3) Snap cable into routing clips on engine valve cover.

(4) Slide rubber grommet away from plastic cable housing.

(5) Install rubber grommet into dash panel until seated.

(6) Push cable housing into rubber grommet and through opening in dash panel.

THROTTLE CONTROL CABLE (Continued)

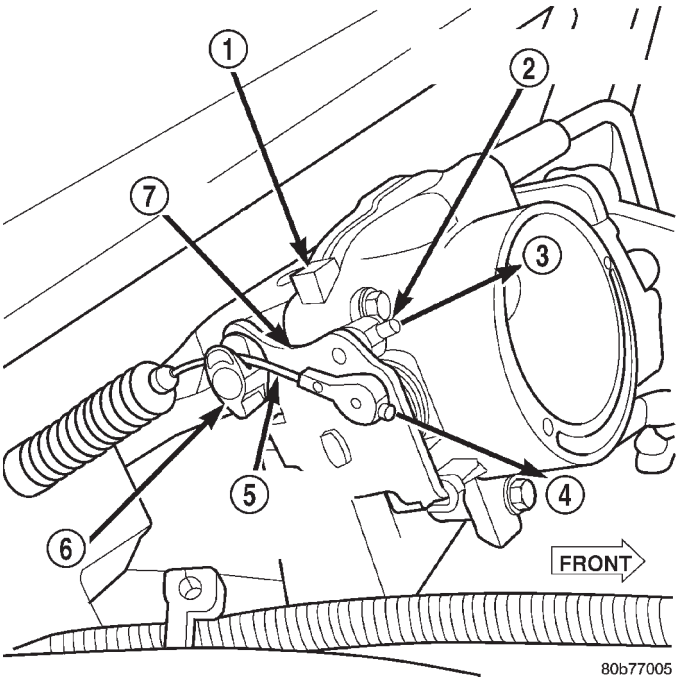

Fig. 36 Accelerator Cable at Bell Crank—4.7L V-8 Engine

1 - THROTTLE BODY
2 - SPEED CONTROL CABLE CONNECTOR
3 - OFF
4 - OFF
5 - ACCELERATOR CABLE CONNECTOR
6 - CABLE CAM
7 - BELLCRANK

(7) From inside vehicle, install clip holding cable to dashpanel (Fig. 16).

(8) From inside vehicle, slide throttle cable core wire into opening in top of pedal arm.

(9) Push cable retainer (clip) into pedal arm opening until it snaps in place.

(10) Before starting engine, operate accelerator pedal to check for any binding.

INSTALLATION - 4.7L

(1) Slide accelerator cable plastic mount into bracket. Continue sliding until tab (Fig. 37) is aligned to hole in mounting bracket.

(2) Route accelerator cable over top of cable cam.

(3) Connect cable end to throttle body bellcrank pin (snaps on rearward).

(4) Slide rubber grommet away from plastic cable housing.

(5) Install rubber grommet into dash panel until seated.

(6) Push cable housing into rubber grommet and through opening in dash panel.

(7) From inside vehicle, install clip holding cable to dashpanel (Fig. 16).

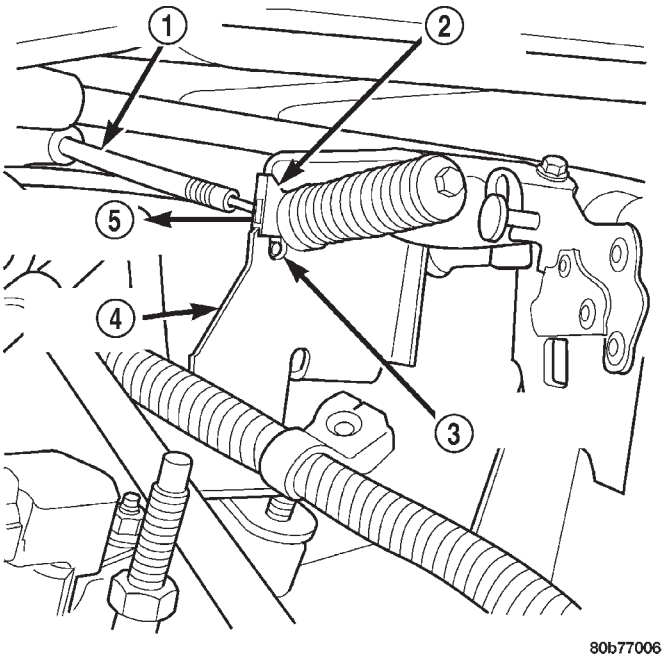

Fig. 37 Accelerator Cable Release Tab—4.7L V-8 Engine

1 - ACCELERATOR CABLE
2 - PLASTIC CABLE MOUNT
3 - PRESS TAB FOR REMOVAL
4 - CABLE BRACKET
5 - SLIDE FOR REMOVAL

(8) From inside vehicle, slide throttle cable core wire into opening in top of pedal arm.

(9) Push cable retainer (clip) into pedal arm opening until it snaps in place.

(10) Snap cable into plenum routing clip.

(11) Install air box to throttle body.

(12) Before starting engine, operate accelerator pedal to check for any binding.

THROTTLE POSITION SENSOR

DESCRIPTION

The 3–wire Throttle Position Sensor (TPS) is mounted on the throttle body and is connected to the throttle blade.

OPERATION

The TPS is a 3–wire variable resistor that provides the Powertrain Control Module (PCM) with an input signal (voltage) that represents the throttle blade position of the throttle body. The sensor is connected to the throttle blade shaft. As the position of the throttle blade changes, the resistance (output voltage) of the TPS changes.

The PCM supplies approximately 5 volts to the TPS. The TPS output voltage (input signal to the

THROTTLE POSITION SENSOR (Continued)

PCM) represents the throttle blade position. The PCM receives an input signal voltage from the TPS. This will vary in an approximate range of from .26 volts at minimum throttle opening (idle), to 4.49 volts at wide open throttle. Along with inputs from other sensors, the PCM uses the TPS input to determine current engine operating conditions. In response to engine operating conditions, the PCM will adjust fuel injector pulse width and ignition timing.

The PCM needs to identify the actions and position of the throttle blade at all times. This information is needed to assist in performing the following calculations:

- Ignition timing advance
- Fuel injection pulse-width
- Idle (learned value or minimum TPS)
- Off-idle (0.06 volt)
- Wide Open Throttle (WOT) open loop (2.608 volts above learned idle voltage)
- Deceleration fuel lean out
- Fuel cutoff during cranking at WOT (2.608 volts above learned idle voltage)
- A/C WOT cutoff (certain automatic transmissions only)

REMOVAL - 4.0L

The TPS is mounted to the throttle body.

(1) Disconnect TPS electrical connector (Fig. 38).
(2) Remove TPS mounting screws (Fig. 39).
(3) Remove TPS.

REMOVAL - 4.7L

The TPS is located on the throttle body.

(1) Remove air duct and air resonator box at throttle body.
(2) Disconnect TPS electrical connector (Fig. 34).
(3) Remove two TPS mounting bolts (screws) (Fig. 40).
(4) Remove TPS from throttle body.

INSTALLATION - 4.0L

The TPS is mounted to the throttle body.

The throttle shaft end of throttle body slides into a socket in the TPS (Fig. 41). The TPS must be installed so that it can be rotated a few degrees. (If sensor will not rotate, install sensor with throttle shaft on other side of socket tangs). The TPS will be under slight tension when rotated.

(1) Install TPS and retaining screws.
(2) Tighten screws to 7 N·m (60 in. lbs.) torque.
(3) Connect TPS electrical connector to TPS.
(4) Manually operate throttle (by hand) to check for any TPS binding before starting engine.

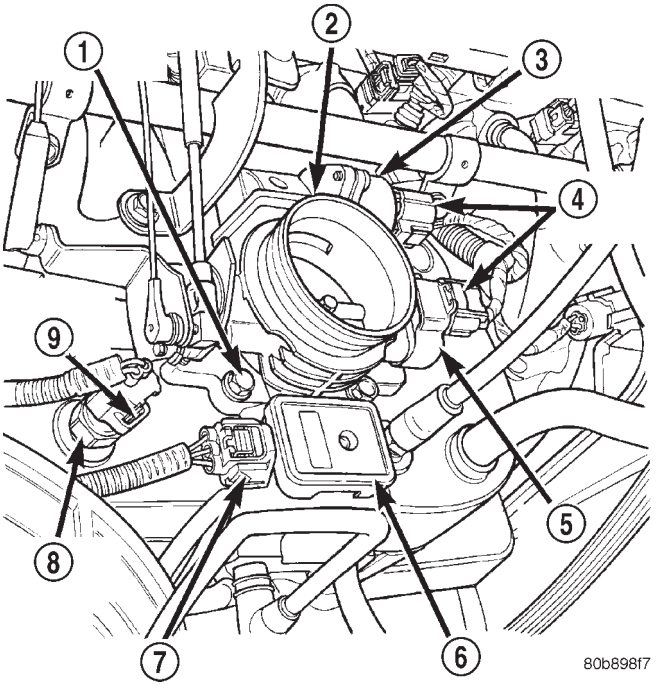

Fig. 38 TPS Electrical Connector—4.0L Engine

1 - MOUNTING BOLTS (4)
2 - THROTTLE BODY
3 - IAC MOTOR
4 - ELEC. CONN.
5 - TPS
6 - MAP SENSOR
7 - ELEC. CONN.
8 - IAT SENSOR
9 - ELEC. CONN.

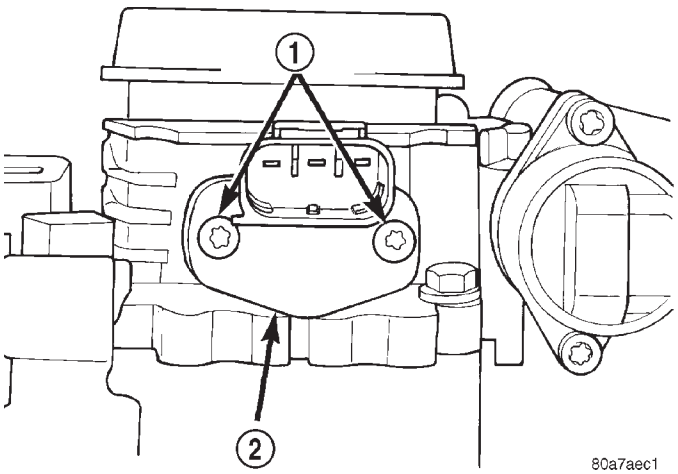

Fig. 39 TPS Mounting Screws—4.0L Engine

1 - MOUNTING SCREWS
2 - TPS

THROTTLE POSITION SENSOR (Continued)

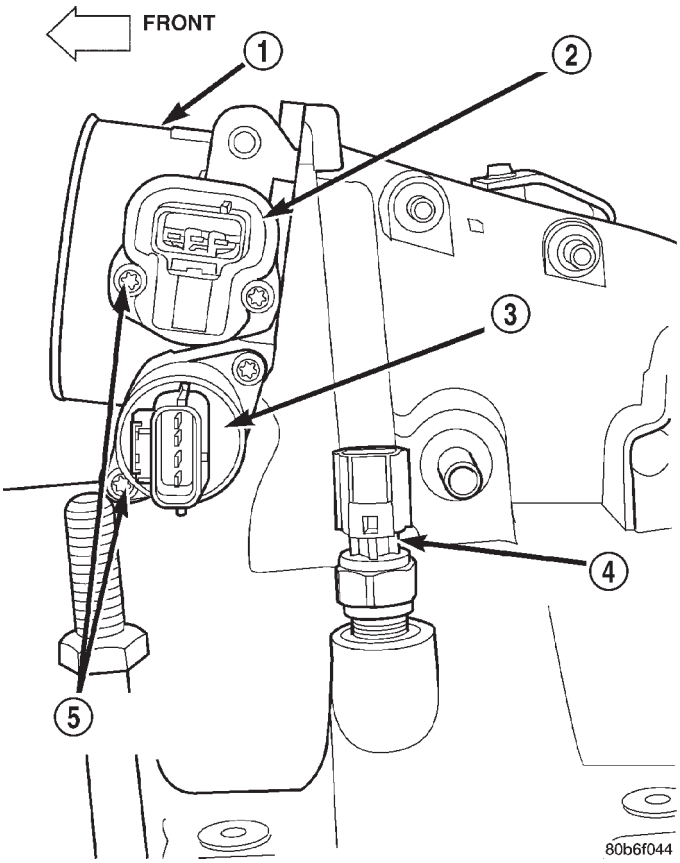

Fig. 40 TPS Mounting Bolts—4.7L V–8

1 - THROTTLE BODY
2 - TPS
3 - IAC MOTOR
4 - IAT SENSOR
5 - MOUNTING SCREWS

INSTALLATION - 4.7L

The throttle shaft end of throttle body slides into a socket in TPS (Fig. 42). The TPS must be installed so that it can be rotated a few degrees. If sensor will not rotate, install sensor with throttle shaft on other side of socket tangs. The TPS will be under slight tension when rotated.

(1) Install TPS and two retaining bolts.
(2) Tighten bolts to 7 N·m (60 in. lbs.) torque.
(3) Manually operate throttle control lever by hand to check for any binding of TPS.
(4) Connect TPS electrical connector to TPS.
(5) Install air duct/air box to throttle body.

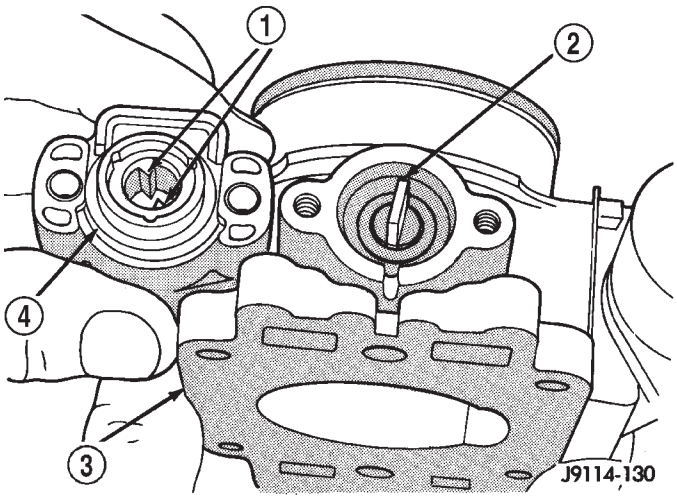

Fig. 41 Throttle Position Sensor Installation—4.0L Engine

1 - TANGS
2 - THROTTLE SHAFT
3 - THROTTLE BODY
4 - TPS

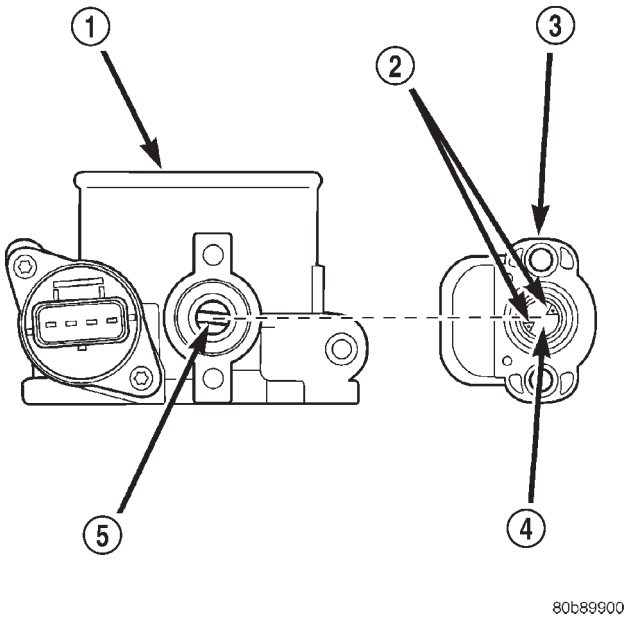

Fig. 42 TPS Installation—4.7L

1 - THROTTLE BODY
2 - LOCATING TANGS
3 - THROTTLE POSITION SENSOR
4 - SOCKET
5 - THROTTLE SHAFT

STEERING

TABLE OF CONTENTS

	page
STEERING	
DESCRIPTION	1
OPERATION	1
DIAGNOSIS AND TESTING	2
POWER STEERING SYSTEM DIAGNOSIS CHARTS	2
STEERING FLOW AND PRESSURE	4
COLUMN	6
GEAR	15
LINKAGE	31
PUMP	35

STEERING

DESCRIPTION - POWER STEERING SYSTEM

The power steering pump (Fig. 2) is a constant flow rate and displacement vane type pump. The pump reservoir is attached to the pump body. The pump is connected to the steering by the pressure and return hoses. The steering gear (Fig. 2) used is a recirculating ball type gear. A tilt and non-tilt column provide steering input.

The power steering system consists of:

- Hydraulic pump
- Recirculating ball steering gear
- Steering column
- Steering linkage
- Cooler (optional)
- Fluid in-line filter (4.7L) (Fig. 1)

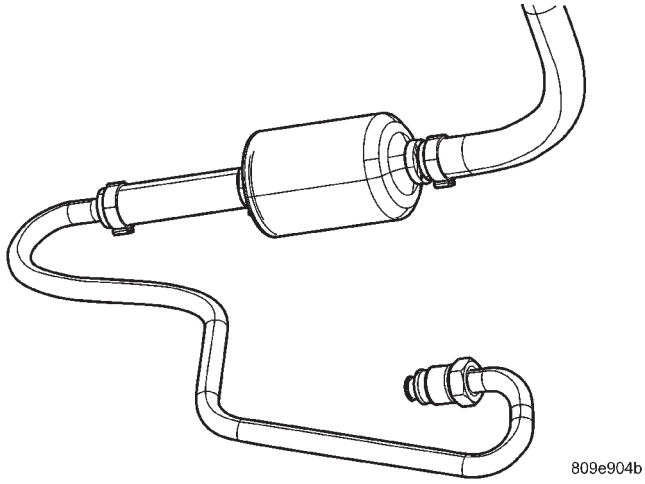

Fig. 1 FLUID FILTER

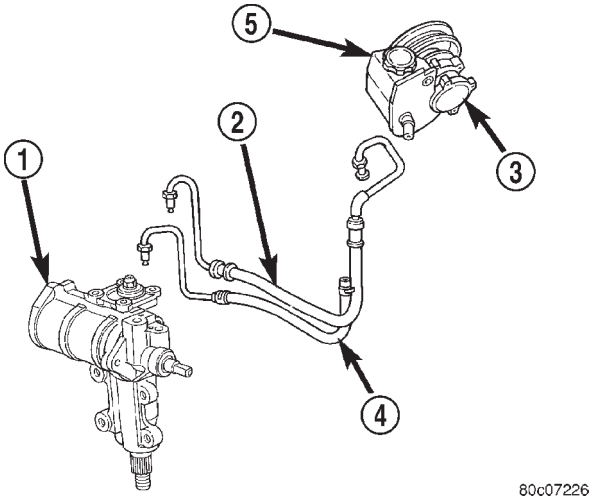

Fig. 2 Power Steering Gear & Pump

1 - STEERING GEAR
2 - PRESSURE HOSE
3 - PUMP
4 - RETURN HOSE
5 - RESERVOIR

OPERATION - POWER STEERING SYSTEM

The rack piston balls act as a rolling thread between the worm shaft and rack piston. The worm shaft is supported by a thrust bearing at the lower end and a bearing assembly at the upper end. When the worm shaft is turned from input from the steering column the rack piston moves. The rack piston teeth mesh with the pitman shaft. Turning the worm shaft turns the pitman shaft, which moves the steering linkage.

STEERING (Continued)

DIAGNOSIS AND TESTING - POWER STEERING SYSTEM DIAGNOSIS CHARTS

STEERING NOISE

There is some noise in all power steering systems. One of the most common is a hissing sound evident at a standstill parking. Or when the steering wheel is at the end of it's travel. Hiss is a high frequency noise similar to that of a water tap being closed slowly. The noise is present in all valves that have a high velocity fluid passing through an orifice. There is no relationship between this noise and steering performance.

CONDITION	POSSIBLE CAUSES	CORRECTION
OBJECTIONAL HISS OR WHISTLE	1. Steering intermediate shaft to dash panel seal.	1. Check and repair seal at dash panel.
	2. Noisy valve in power steering gear.	2. Replace steering gear.
RATTLE OR CLUNK	1. Gear mounting bolts loose.	1. Tighten bolts to specification.
	2. Loose or damaged suspension components/track bar.	2. Inspect and repair suspension.
	3. Loose or damaged steering linkage.	3. Inspect and repair steering linkage.
	4. Internal gear noise.	4. Replace gear.
	5. Pressure hose in contact with other components.	5. Reposition hose.
CHIRP OR SQUEAL	1. Loose belt.	1. Adjust or replace.
	2. Belt routing.	2. Verify belt routing is correct.
WHINE OR GROWL	1. Low fluid level.	1. Fill to proper level.
	2. Pressure hose in contact with other components.	2. Reposition hose.
	3. Internal pump noise.	3. Replace pump.
	4. Air in the system.	4. Perform pump initial operation.
SUCKING AIR SOUND	1. Loose return line clamp.	1. Replace clamp.
	2. O-ring missing or damaged on hose fitting.	2. Replace o-ring.
	3. Low fluid level.	3. Fill to proper level.
	4. Air leak between pump and reservoir.	4. Repair as necessary.
SCRUBBING OR KNOCKING	1. Wrong tire size.	1. Verify tire size.
	2. Wrong gear.	2. Verify gear.

STEERING (Continued)

BINDING AND STICKING

CONDITION	POSSIBLE CAUSE	CORRECTION
DIFFICULT TO TURN WHEEL STICKS OR BINDS	1. Low fluid level.	1. Fill to proper level.
	2. Tire pressure.	2. Adjust tire pressure.
	3. Steering component.	3. Inspect and lube.
	4. Loose belt.	4. Adjust or replace.
	5. Low pump pressure.	5. Pressure test and replace if necessary.
	6. Column shaft coupler binding.	6. Replace coupler.
	7. Steering gear worn or out of adjustment.	7. Repair or replace gear.
	8. Ball joints binding.	8. Inspect and repair as necessary.
	9. Belt routing.	9. Verify belt routing is correct.
4.7L	Hydraulic fan motor steering output low	Pressure / Flow test fans steering output flow

INSUFFICIENT ASST. OR POOR RETURN TO CENTER

CONDITION	POSSIBLE CAUSE	CORRECTION
HARD TURNING OR MOMENTARY INCREASE IN TURNING EFFORT	1. Tire pressure.	1. Adjust tire pressure.
	2. Low fluid level.	2. Fill to proper level.
	3. Loose belt.	3. Adjust or replace.
	4. Lack of lubrication.	4. Inspect and lubricate steering and suspension compnents.
	5. Low pump pressure or flow.	5. Pressure and flow test and repair as necessary.
	6. Internal gear leak.	6. Pressure and flow test, and repair as necessary.
	7. Belt routing.	7. Verify belt routing is correct.
4.7L	8. Low flow / pressure from fan motor	8. Pressure and flow test and repair as necessary.
STEERING WHEEL DOES NOT WANT TO RETURN TO CENTER POSITION	1. Tire pressure.	1. Adjust tire pressure.
	2. Wheel alignment.	2. Align front end.
	3. Lack of lubrication.	3. Inspect and lubricate steering and suspension compnents.
	4. High friction in steering gear.	4. Test and adjust as necessary.
	5. Ball joints binding.	5. Inspect and repair as necessary.

NOTE:
Some roads will cause a vehicle to drift, due to the crown in the road.

STEERING (Continued)

LOOSE STEERING AND VEHICLE LEADS/DRIFTS

CONDITION	POSSIBLE CAUSE	CORRECTION
EXCESSIVE PLAY IN STEERING WHEEL	1. Worn or loose suspension or steering components.	1. Repair as necessary.
	2. Worn or loose wheel bearings.	2. Repair as necessary.
	3. Steering gear mounting.	3. Tighten gear mounting bolts to specification.
	4. Gear out of adjustment.	4. Adjust gear to specification.
	5. Worn or loose steering coupler.	5. Repair as necessary.
VEHICLE PULLS TO ONE SIDE DURING BRAKING	1. Tire Pressure.	1. Adjust tire pressure.
	2. Air in brake hydrauliics system.	2. Bleed brake system.
	3. Worn brake components.	3. Repair as necessary.
VEHICLE LEADS OR DRIFTS FROM STRAIGHT AHEAD DIRECTION ON UNCROWNED ROAD.	1. Tire pressure.	1. Adjust tire pressure.
	2. Radial tire lead.	2. Cross front tires.
	3. Brakes dragging.	3. Repair as necessary.
	4. Wheel alignment.	4. Align vehicle.
	5. Weak or broken spring.	5. Replace spring.
	6. Loose or worn steering/ suspension components.	6. Repair as necessary.
	7. Cross caster out of spec.	7. Adjust or replace axle as necessary.

DIAGNOSIS AND TESTING - STEERING FLOW AND PRESSURE

The following procedure is used to test the operation of the power steering system on the vehicle. This test will provide the gallons per minute (GPM) or flow rate of the power steering pump along with the maximum relief pressure. Perform test any time a power steering system problem is present. This test will determine if the power steering pump or power steering gear is not functioning properly. The following pressure and flow test is performed using Power Steering Analyzer Tool kit 6815 (Fig. 3) and Adapter Kit 6893.

FLOW AND PRESSURE TEST

(1) Check the power steering belt to ensure it is in good condition and adjusted properly.

(2) Connect pressure gauge hose from the Power Steering Analyzer to Tube 6865.

(3) Connect Adapter 6826 to Power Steering Analyzer test valve end.

(4) Disconnect the high pressure hose from the power steering pump.

(5) Connect Tube 6865 to the pump hose fitting.

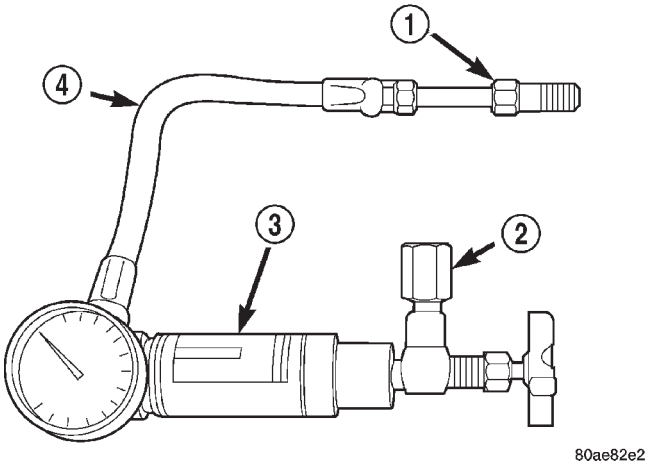

Fig. 3 Power Steering Analyzer

1 - TUBE
2 - ADAPTER FITTINGS
3 - ANALYZER
4 - GAUGE HOSE

(6) Connect the power steering hose from the steering gear to Adapter 6826.

(7) Open the test valve completely.

STEERING (Continued)

(8) Start engine and let idle long enough to circulate power steering fluid through flow/pressure test gauge.

(9) Shut off the engine and check the fluid level, add fluid as necessary. Start engine again and let idle.

(10) The initial pressure reading should be 345-552 kPa (50-80 psi). If pressure is higher inspect the hoses for restrictions and repair as necessary.

(11) Increase the engine speed to 1500 RPM and read the flow meter. The reading should be 2.4 - 2.8 GPM, if the reading is below this specification the pump should be replaced.

CAUTION: This next step involves testing maximum pump pressure output and flow control valve operation. Do not leave valve closed for more than three seconds as the pump could be damaged.

(12) Close valve fully three times for three seconds and record highest pressure indicated each time. **All three readings must be at pump relief pressure specifications and within 345 kPa (50 psi) of each other.**

- Pressures above specifications but not within 345 kPa (50 psi) of each other, replace pump.
- Pressures within 345 kPa (50 psi) of each other but below specifications, replace pump.

CAUTION: Do not force the pump to operate against the stops for more than 2 to 4 seconds at a time because, pump damage will result.

(13) Open the test valve and turn the steering wheel to the extreme left and right positions against the stops. Record the highest pressure reading at each position. Compare readings to the pump specifications chart. If pressures readings are not within 50 psi. of each other, the gear is leaking internally and must be repaired.

GEAR INLET SPECIFICATIONS 4.0L & 4.7L

ENGINE	RELIEF PRESSURE ± 50	FLOW RATE (GPM)
4.0L	9653 kPa (1400 psi)	1500 RPM 2.4 - 2.8 GPM
4.7L	9653 kPa (1450 psi)	

PUMP MOTOR SPECIFICATIONS 4.7L

ENGINE	RELIEF PRESSURE ± 75	FLOW RATE (GPM)
4.7L	9653 kPa (1875 psi)	2000 RPM 5 GPM Minium @ 200 psi

COLUMN

TABLE OF CONTENTS

	page
COLUMN	
DESCRIPTION	6
REMOVAL	6
INSTALLATION	8
SPECIFICATIONS	10
SPECIAL TOOLS	11
IGNITION SWITCH	
DESCRIPTION	11
DIAGNOSIS AND TESTING	11
IGNITION SWITCH	11
REMOVAL	11
INSTALLATION	11
KEY-IN IGNITION SWITCH	
DESCRIPTION	12
OPERATION	12
DIAGNOSIS AND TESTING	12
KEY-IN IGNITION SWITCH	12
LOCK CYLINDER HOUSING	
REMOVAL	13
INSTALLATION	14
STEERING WHEEL	
REMOVAL	14
INSTALLATION	14

COLUMN

SERVICE WARNINGS AND CAUTIONS

DESCRIPTION

The tilt column (Fig. 1) has been designed to be serviced as an assembly, less the wiring, switches, shrouds, steering wheel, etc. Most steering column components can be serviced without removing the steering column from the vehicle.

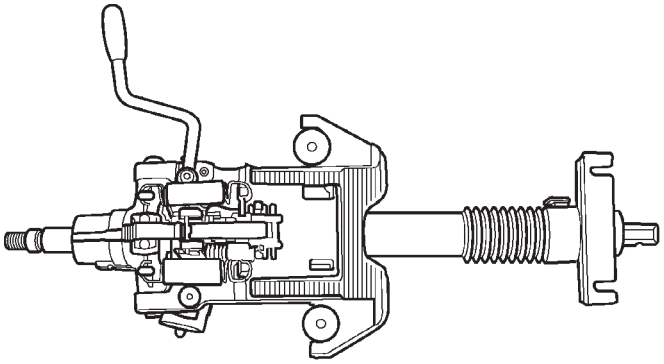

80b6f0a2

Fig. 1 Steering Column

To service the steering wheel, switches or airbag,(Refer to 8 - ELECTRICAL/RESTRAINTS - WARNING).

WARNING: THE AIRBAG SYSTEM IS A SENSITIVE, COMPLEX ELECTRO-MECHANICAL UNIT. BEFORE ATTEMPTING TO DIAGNOSE, REMOVE OR INSTALL THE AIRBAG SYSTEM COMPONENTS YOU MUST FIRST DISCONNECT AND ISOLATE THE BATTERY NEGATIVE (GROUND) CABLE. THEN WAIT TWO MINUTES FOR THE SYSTEM CAPACITOR TO DISCHARGE. FAILURE TO DO SO COULD RESULT IN ACCIDENTAL DEPLOYMENT OF THE AIRBAG AND POSSIBLE PERSONAL INJURY. THE FASTENERS, SCREWS, AND BOLTS, ORIGINALLY USED FOR THE AIRBAG COMPONENTS, HAVE SPECIAL COATINGS AND ARE SPECIFICALLY DESIGNED FOR THE AIRBAG SYSTEM. THEY MUST NEVER BE REPLACED WITH ANY SUBSTITUTES. ANYTIME A NEW FASTENER IS NEEDED, REPLACE WITH THE CORRECT FASTENERS PROVIDED IN THE SERVICE PACKAGE OR FASTENERS LISTED IN THE PARTS BOOKS.

CAUTION: Safety goggles should be worn at all times when working on steering columns.

REMOVAL

WARNING: BEFORE SERVICING THE STEERING COLUMN THE AIRBAG SYSTEM MUST BE DISARMED. FAILURE TO DO SO MAY RESULT IN ACCIDENTAL DEPLOYMENT OF THE AIRBAG AND POSSIBLE PERSONAL INJURY.(Refer to 8 - ELECTRICAL/RESTRAINTS/DRIVER AIRBAG - REMOVAL).

COLUMN (Continued)

(1) Position front wheels straight ahead.

(2) Disconnect and isolate the negative (ground) cable from the battery.

(3) Remove the airbag,(Refer to 8 - ELECTRICAL/ RESTRAINTS/DRIVER AIRBAG - REMOVAL).

(4) Remove the steering wheel nut and remove wheel with Puller C-3894-A (Fig. 2).

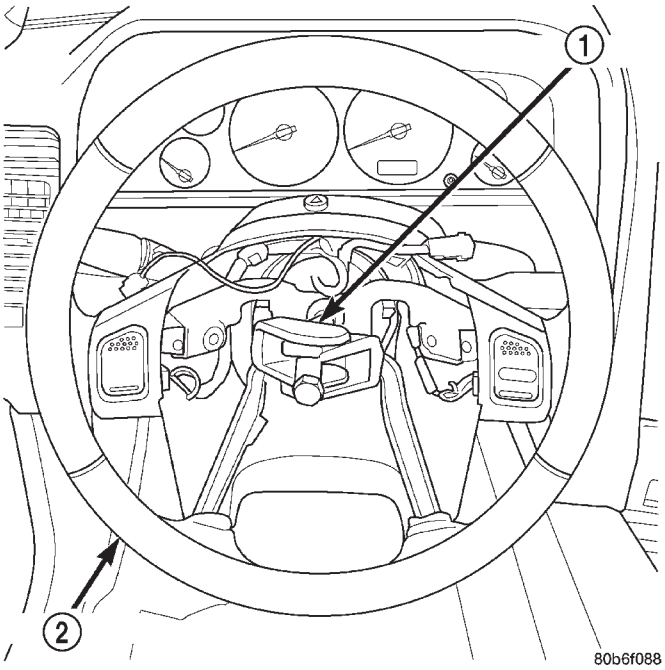

Fig. 2 Steering Wheel Puller

1 - PULLER
2 - STEERING WHEEL

NOTE: Ensure the puller jaws are seated in the pockets (Fig. 3) of the steering wheel armature.

(5) Remove the cluster bezel by pulling it from the instrument panel (Fig. 4).

(6) Remove the knee blocker cover (Fig. 5),(Refer to 23 - BODY/INSTRUMENT PANEL - REMOVAL).

(7) Remove the lower steering column shroud mounting screw (Fig. 6).

(8) Unsnap the two halves of the column shrouds by pressing on the sides of the upper shroud and tilting the rear of the upper shroud up. Remove the shrouds from the steering column (Fig. 7).

(9) Remove the upper fixed shroud mounting screws and remove the shroud (Fig. 8).

(10) Disconnect the multifuction switch (Fig. 9) and ignition switch harness.

(11) Remove the multifuction switch screw from underneath the switch (Fig. 10). Slide the multifuction switch and clock spring off the column as an assembly (Fig. 11).

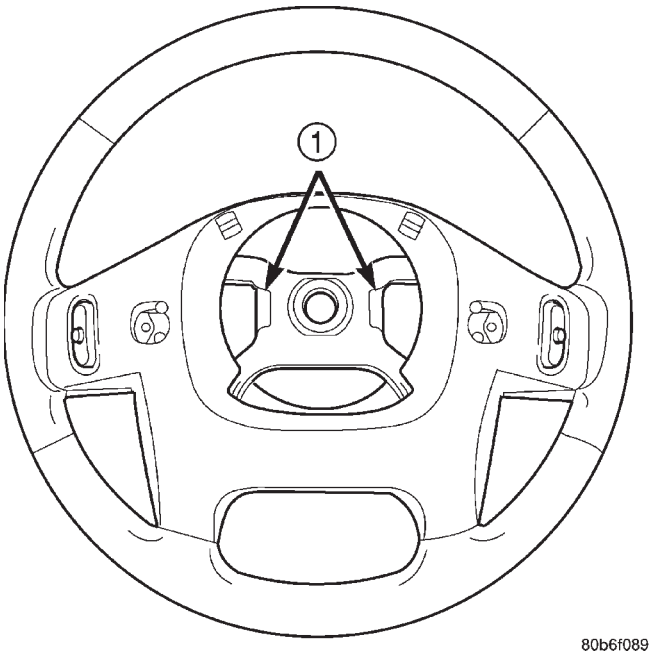

Fig. 3 Steering Wheel Pockets

1 - STEERING WHEEL POCKETS

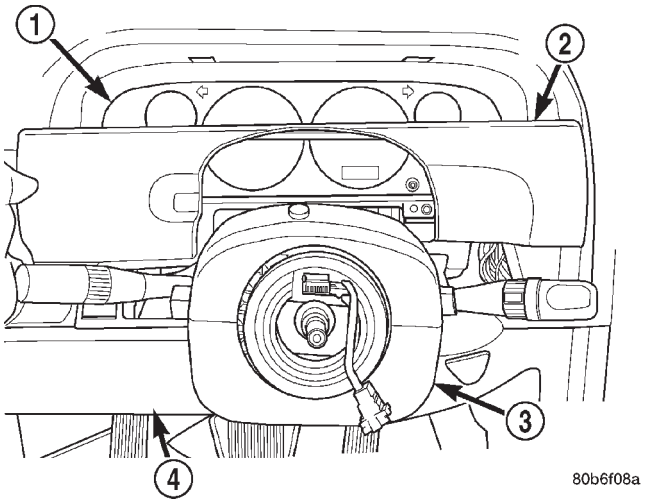

Fig. 4 Cluster Bezel

1 - CLUSTER
2 - CLUSTER BEZEL
3 - STEERING COLUMN
4 - KNEE BLOCKER COVER

(12) Turn the ignition key to the on position then release and remove the shifter interlock cable (Fig. 12) from the ignition lock cylinder housing.

(13) Remove the column coupler bolt (Fig. 13) and slide the coupler off the column shaft.

(14) Remove the column mounting nuts (Fig. 13) and lower column off mounting studs. Remove the column from the vehicle.

COLUMN (Continued)

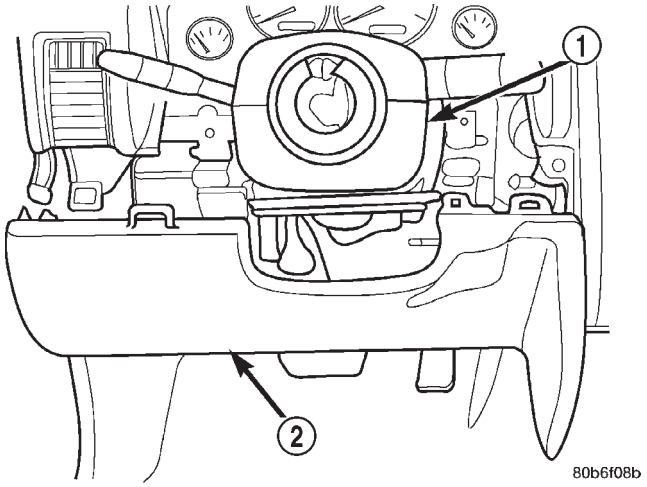

Fig. 5 Knee Blocker Cover

1 - STEERING COLUMN
2 - KNEE BLOCKER COVER

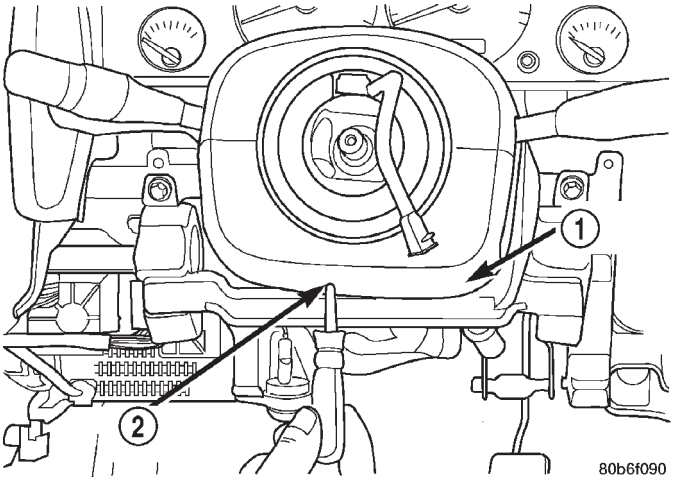

Fig. 6 Column Shroud Mounting Screw

1 - LOWER SHROUD
2 - ACCESS HOLE

(15) Remove the ignition switch, cylinder and SKIM, (Refer to 19 - STEERING/COLUMN/LOCK CYLINDER HOUSING - REMOVAL). (Fig. 14).

INSTALLATION

WARNING: BEFORE SERVICING THE STEERING COLUMN THE AIRBAG SYSTEM MUST BE DISARMED. FAILURE TO DO SO MAY RESULT IN ACCIDENTAL DEPLOYMENT OF THE AIRBAG AND POSSIBLE PERSONAL INJURY. (Refer to 8 - ELECTRICAL/RESTRAINTS/DRIVER AIRBAG - INSTALLATION).

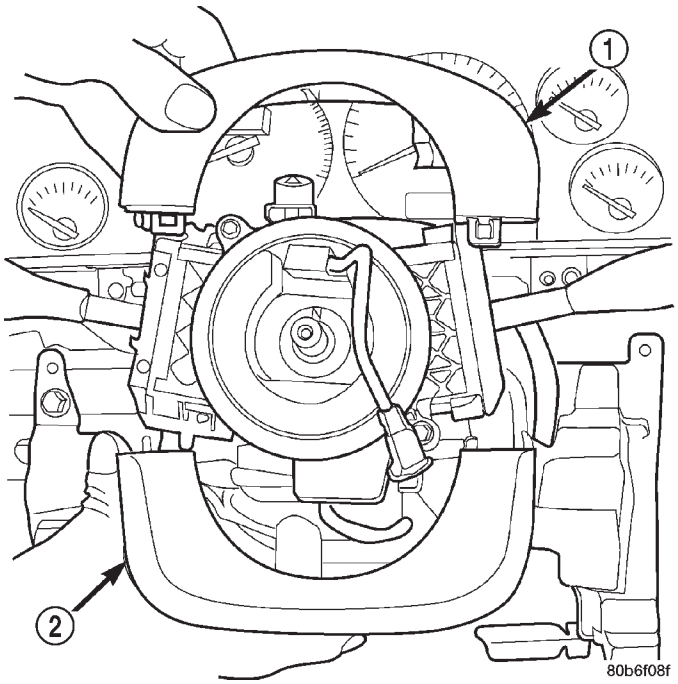

Fig. 7 Column Shrouds

1 - UPPER SHROUD
2 - LOWER SHROUD

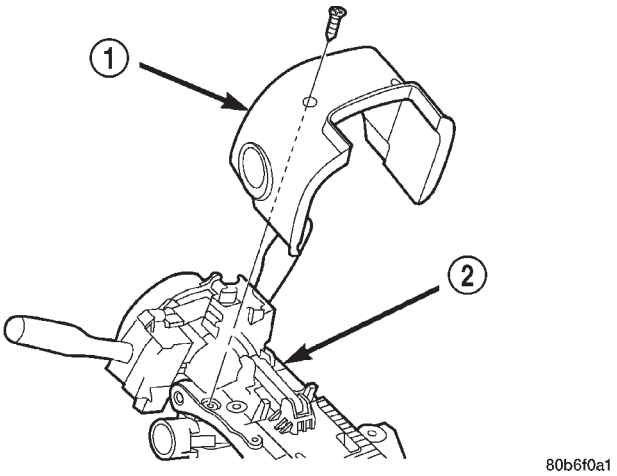

Fig. 8 Upper Fixed Shroud

1 - UPPER FIXED SHROUD
2 - COLUMN

(1) Install the ignition switch, cylinder and SKIM-,(Refer to 19 - STEERING/COLUMN/IGNITION SWITCH - INSTALLATION).

(2) Install the column into the vehicle and lift the column up onto the mounting studs. Install the mounting nuts and tighten to 12 N·m (105 in. lbs.).

COLUMN (Continued)

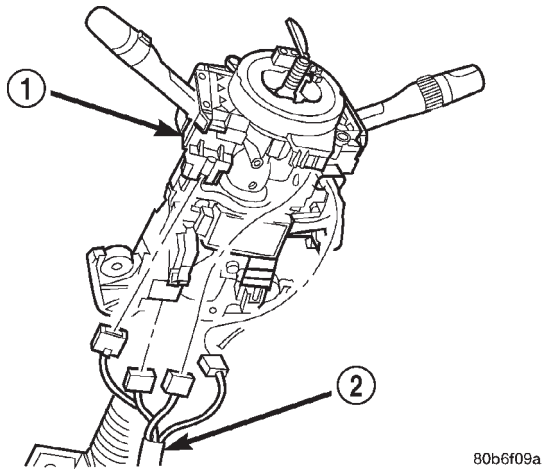

Fig. 9 Multifuction Switch Harness

1 - MULTIFUNCTION SWITCH
2 - MULTIFUNCTION SWITCH HARNESS

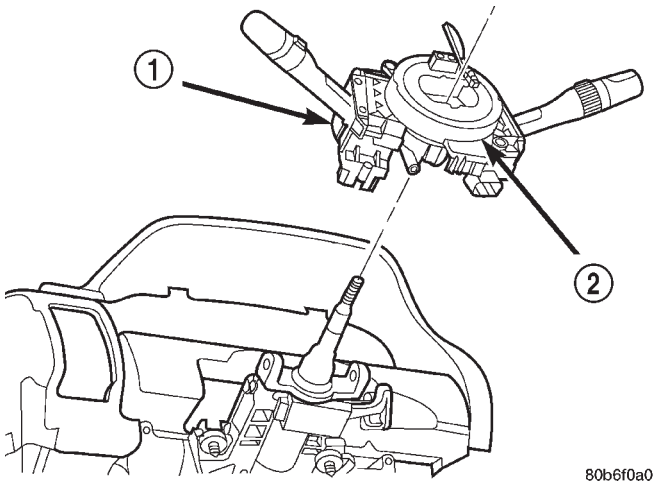

Fig. 11 Multifuction Switch And Clock Spring

1 - MULTIFUNCTION SWITCH
2 - CLOCK SPRING

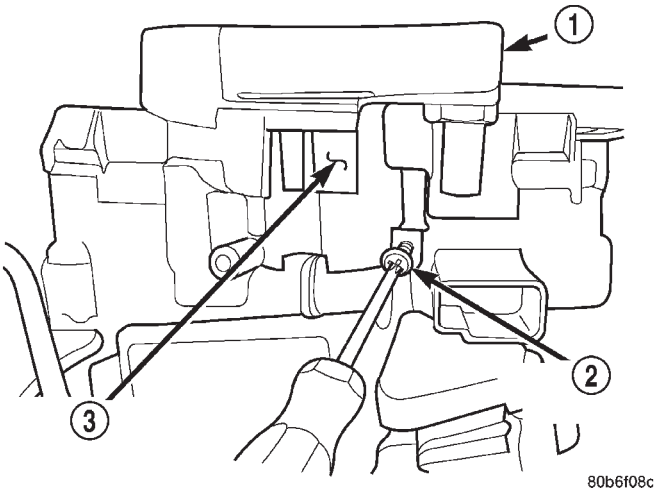

Fig. 10 Multifuction

1 - CLOCK SPRING
2 - MOUNTING SCREW
3 - MULTIFUNCTION SWITCH ASSEMBLY

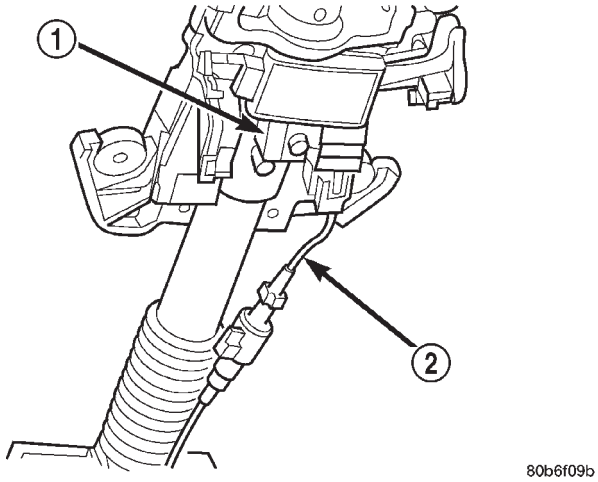

Fig. 12 Shifter Interlock Cable

1 - LOCK CYLINDER HOUSING
2 - INTERLOCK CABLE

(3) Slid the coupler onto the column shaft and install the coupler bolt. Tighten the coupler bolt to 49 N·m (36 ft. lbs.).

(4) Turn the ignition key to the on position then release and install the shifter interlock cable (Fig. 12) into ignition lock cylinder housing.

(5) Verify ignition switch and shifter interlock operation.,(Refer to 21 - TRANSMISSION/TRANSAXLE/AUTOMATIC - 42RE/GEAR SHIFT CABLE - ADJUSTMENTS).

(6) Slide the multifuction switch and clock spring onto the column as an assembly (Fig. 11).

(7) Install the multifuction switch mounting screw (Fig. 10).

(8) Connect the multifuction switch (Fig. 9) and ignition switch harness.

(9) Install the upper fixed shroud and mounting screws (Fig. 8).

(10) Install the lower steering column shroud to the steering column. Install and tighten the mounting screw.

(11) Install the upper column shroud. Align the upper shroud to the lower shroud and snap the two shroud halves together.

(12) Install the knee blocker cover (Fig. 5),(Refer to 23 - BODY/INSTRUMENT PANEL - INSTALLATION).

(13) Install the cluster bezel by inserting it into the instrument panel (Fig. 4).

COLUMN (Continued)

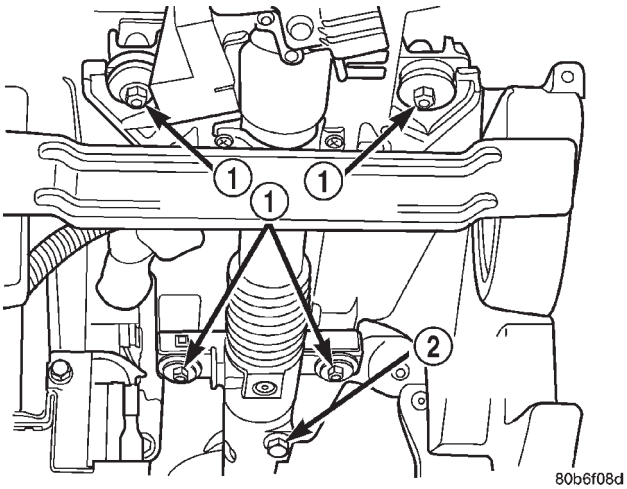

Fig. 13 Column Coupler Bolt And Mounting Nuts

1 - COLUMN MOUNTING NUTS
2 - COUPLER BOLT

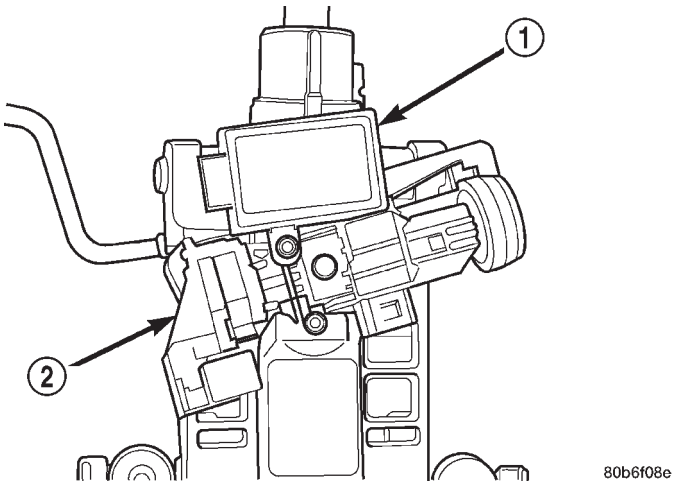

Fig. 14 Ignition Switch And SKIM

1 - SKIM
2 - IGNITION SWITCH

(14) Align the steering wheel with the column index spline and install the wheel on the column shaft. Pull the clockspring wire harness through the steering wheel armature spokes.

(15) Install and tighten the steering wheel mounting nut to 61 N·m (45 ft. lbs.).

(16) Connect the steering wheel wire harness connector to the clock spring connector.

(17) Install the airbag,(Refer to 8 - ELECTRICAL/ RESTRAINTS/DRIVER AIRBAG - INSTALLATION).

(18) Connect the negative (ground) cable to the battery.

SPECIFICATIONS

TORQUE CHART

TORQUE SPECIFICATIONS

DESCRIPTION	N·m	Ft. Lbs.	In. Lbs.
Steering Column Steering Wheel Nut	61	45	—
Steering Column Column Bracket Nuts	12	—	105
Steering Column Shaft Coupler Bolts	49	36	—

SPECIAL TOOLS

STEERING COLUMN

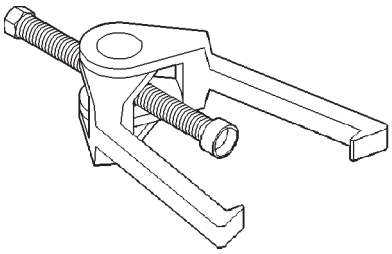

Puller C-3894-A

IGNITION SWITCH

DESCRIPTION

The electrical ignition switch is located on the steering column. It is used as the main on/off switching device for most electrical components. The mechanical key lock cylinder is used to engage/disengage the electrical ignition switch.

DIAGNOSIS AND TESTING - IGNITION SWITCH

ELECTRICAL DIAGNOSIS

For ignition switch electrical schematics, refer to Ignition Switch in Wiring Diagrams.

MECHANICAL DIAGNOSIS (KEY DIFFICULT TO ROTATE)

Vehicles equipped with an automatic transmission and a floor mounted shifter: a cable is used to connect the interlock device in the steering column assembly, to the transmission floor shift lever. This interlock device is used to lock the transmission shifter in the PARK position when the key lock cylinder is rotated to the LOCKED or ACCESSORY position. The interlock device within the steering column is not serviceable. If repair is necessary, the steering column assembly must be replaced,(Refer to 19 - STEERING/COLUMN - REMOVAL).

If the ignition key is difficult to rotate to or from the LOCK or ACCESSORY position, it may not be the fault of the key cylinder or the steering column components. The brake transmission shift interlock cable may be out of adjustment. Refer to Brake Transmission Shift Interlock Cable Adjustment in Transmissions for adjustment procedures.

Vehicles equipped with an automatic transmission and a steering column mounted shifter: an interlock device is located within the steering column. This interlock device is used to lock the transmission shifter in the PARK position when the key lock cylinder is in the LOCKED or ACCESSORY position. If it is difficult to rotate the key to or from the LOCK or ACCESSORY position, the interlock device within the steering column may be defective. This device is not serviceable. If repair is necessary, the steering column assembly must be replaced,(Refer to 19 - STEERING/COLUMN - REMOVAL).

Vehicles equipped with a manual transmission and a floor mounted shifter: on certain models, a lever is located on the steering column behind the ignition key lock cylinder. The lever must be manually operated to allow rotation of the ignition key lock cylinder to the LOCK or ACCESSORY position. If it is difficult to rotate the key to the LOCK or ACCESSORY position, the lever mechanism may be defective. This mechanism is not serviceable. If repair is necessary, the steering column assembly must be replaced,(Refer to 19 - STEERING/COLUMN - REMOVAL).

On other models, the ignition key cylinder must be depressed to allow it to be rotated into the LOCK or ACCESSORY position. If it is difficult to rotate the key to the LOCK or ACCESSORY position, the lock mechanism within the steering column may be defective. This mechanism is not serviceable. If repair is necessary, the steering column assembly must be replaced,(Refer to 19 - STEERING/COLUMN - REMOVAL).

IGNITION SWITCH REMOVAL

The ignition key must be in the key cylinder for cylinder removal. The key cylinder must be removed first before removing ignition switch.

(1) Remove key cylinder. Refer to previous steps.

(2) Remove lower steering column cover screws and remove cover (Fig. 19).

(3) Remove ignition switch mounting screw (Fig. 17). Use tamper proof torx bit to remove the screw.

(4) Using a small screwdriver, push on locking tab (Fig. 15) and remove switch from steering column.

(5) Disconnect two electrical connectors at rear of ignition switch (Fig. 17).

IGNITION SWITCH INSTALLATION

The ignition key must be in the key cylinder for cylinder removal. The key cylinder must be removed first before removing ignition switch.

(1) Before installing ignition switch, rotate the slot in the switch to the ON position (Fig. 16).

(2) Connect two electrical connectors to rear of ignition switch. Make sure that locking tabs are fully seated into wiring connectors.

(3) Position switch to column and install tamper proof screw. Tighten screw to 3 N·m (26 in. lbs.).

(4) Install steering column lower cover.

KEY-IN IGNITION SWITCH (Continued)

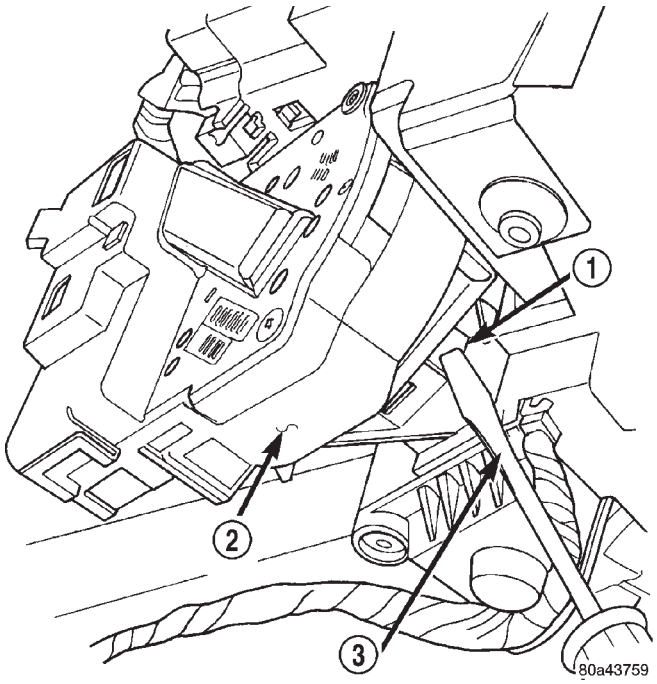

Fig. 15 Ignition Switch Lock Tab

1 - LOCK TAB
2 - IGNITION SWITCH
3 - SCREWDRIVER

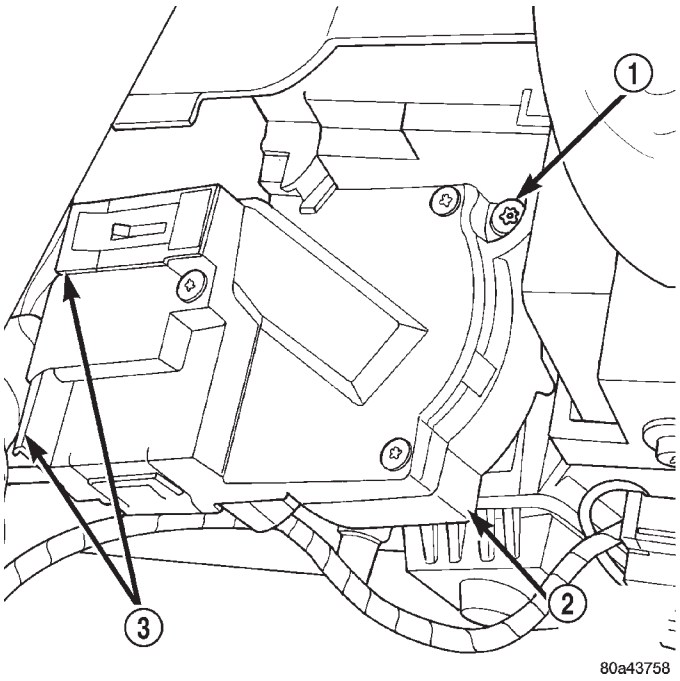

Fig. 17 Ignition Switch Removal/Installation

1 - TAMPER PROOF SCREW
2 - IGNITION SWITCH
3 - ELECTRICAL CONNECTORS

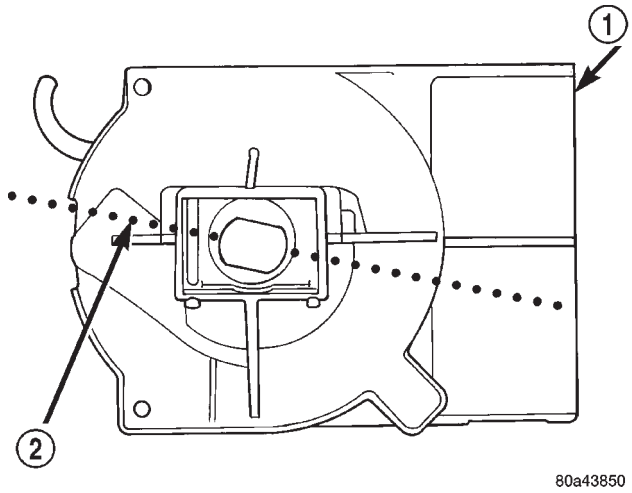

Fig. 16 Switch In ON Position

1 - IGNITION SWITCH
2 - ROTATE TO ON POSITION

KEY-IN IGNITION SWITCH

DESCRIPTION

The key-in ignition switch is concealed within and integral to the ignition switch, which is mounted on the steering column. The key-in ignition switch is actuated by the ignition lock cylinder mechanism, and is hard wired between a body ground and the Body Control Module (BCM) through the instrument panel wire harness.

The key-in ignition switch cannot be adjusted or repaired and, if faulty or damaged, the entire ignition switch unit must be replaced,(Refer to 19 - STEERING/COLUMN/LOCK CYLINDER HOUSING - REMOVAL). For complete circuit diagrams, refer to **Body Control Module** in the Contents of Wiring Diagrams.

OPERATION

The key-in ignition switch closes a path to ground for the BCM when the ignition key is inserted in the ignition lock cylinder, and opens the ground path when the key is removed from the ignition lock cylinder. The BCM monitors the key-in ignition switch status through an internal pull-up, then sends the proper switch status messages to other electronic modules over the Programmable Communications Interface (PCI) data bus network. The key-in ignition switch status is also used by the BCM as an input for chime warning system operation.

DIAGNOSIS AND TESTING — KEY-IN IGNITION SWITCH

For complete circuit diagrams, refer to **Body Control Module** in the Contents of Wiring Diagrams.

KEY-IN IGNITION SWITCH (Continued)

WARNING: ON VEHICLES EQUIPPED WITH AIRBAGS, REFER TO 8M - PASSIVE RESTRAINT SYSTEMS BEFORE ATTEMPTING ANY STEERING WHEEL, STEERING COLUMN, OR INSTRUMENT PANEL COMPONENT DIAGNOSIS OR SERVICE. FAILURE TO TAKE THE PROPER PRECAUTIONS COULD RESULT IN ACCIDENTAL AIRBAG DEPLOYMENT AND POSSIBLE PERSONAL INJURY.

(1) Disconnect and isolate the battery negative cable. Disconnect the instrument panel wire harness connector from the key-in ignition switch connector receptacle on the ignition switch. Check for continuity between the key-in ignition switch sense and ground terminals of the key-in ignition switch connector receptacle. There should be continuity with the key inserted in the ignition lock cylinder, and no continuity with the key removed from the ignition lock cylinder. If OK, go to Step 2. If not OK, replace the faulty ignition switch unit.

(2) Check for continuity between the ground circuit cavity of the instrument panel wire harness connector for the key-in ignition switch and a good ground. There should be continuity. If OK, go to Step 3. If not OK, repair the open ground circuit to ground as required.

(3) Disconnect the gray 26-way instrument panel wire harness connector from the Body Control Module (BCM) connector receptacle. Check for continuity between the key-in ignition switch sense circuit cavity of the instrument panel wire harness connector for the key-in ignition switch and a good ground. There should be no continuity. If OK, go to Step 4. If not OK, repair the shorted key-in ignition switch sense circuit as required.

(4) Check for continuity between the key-in ignition switch sense circuit cavities of the instrument panel wire harness connector for the key-in ignition switch and the gray 26-way instrument panel wire harness connector for the BCM. There should be continuity. If OK, use a DRB scan tool and the proper Diagnostic Procedures manual to test the BCM. If not OK, repair the open key-in ignition switch sense circuit as required.

LOCK CYLINDER HOUSING

KEY CYLINDER REMOVAL

The ignition key must be in the key cylinder for cylinder removal. The key cylinder must be removed first before removing ignition switch.

(1) Disconnect negative battery cable at battery.

(2) If equipped with an automatic transmission, place shifter in PARK position.

(3) Rotate key to ON position.

(4) A release tang is located on bottom of key cylinder (Fig. 18).

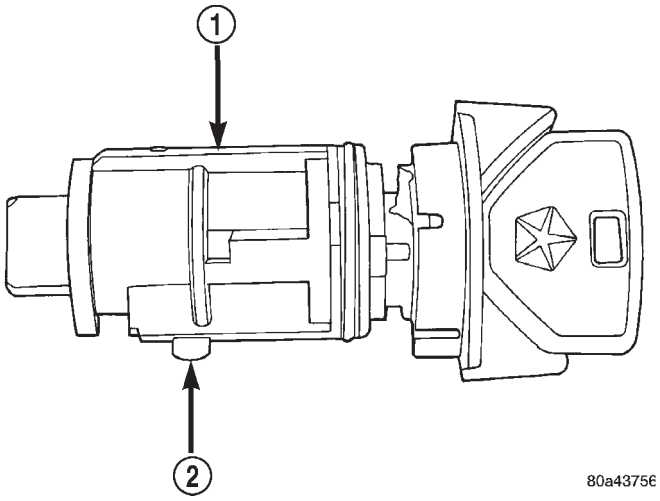

Fig. 18 Key Cylinder Release Tang

1 - KEY CYLINDER
2 - RELEASE TANG

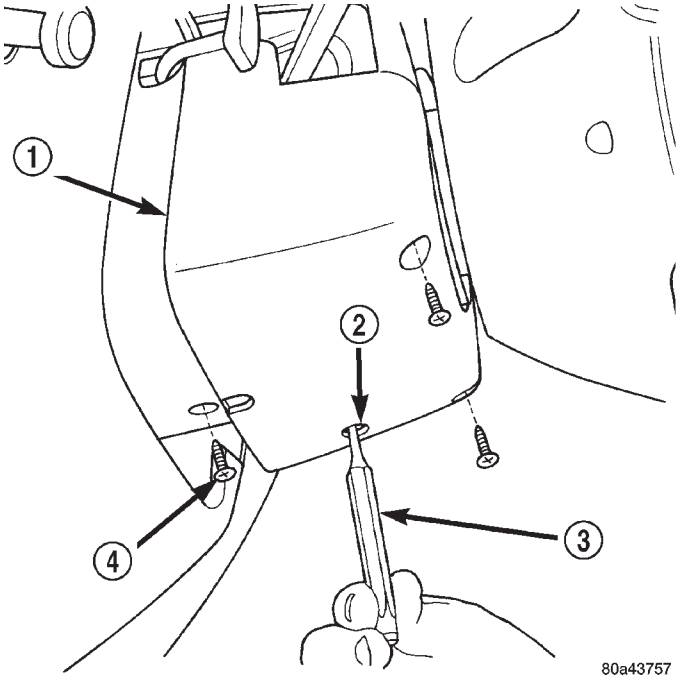

Fig. 19 Key Cylinder and Cover Removal

1 - LOWER COVER
2 - ACCESS HOLE
3 - PIN PUNCH
4 - COVER SCREWS (3)

(5) Position a small screwdriver or pin punch into tang access hole on bottom of steering column lower cover (Fig. 19).

(6) Push the pin punch up while pulling key cylinder from steering column.

LOCK CYLINDER HOUSING (Continued)

KEY CYLINDER INSTALLATION

The ignition key must be in the key cylinder for cylinder removal. The key cylinder must be removed first before removing ignition switch.

(1) If equipped with an automatic transmission, place shifter in PARK position.

(2) Position key cylinder into steering column as it would normally be in the ON position.

(3) Press key cylinder into column until it snaps into position.

(4) Check mechanical operation of switch. **Automatic Transmission:** Be sure transmission lever is locked in PARK position after key removal. If key is difficult to rotate or is difficult to remove, the shift lever-to-steering column cable may be out of adjustment or defective. Refer to Transmission for procedures. **Manual Transmission:** Be sure key cannot be removed until release lever is operated. If key can be removed, release lever mechanism may be defective. Release lever mechanism is not serviced separately. If repair is necessary, the steering column must be replaced,(Refer to 19 - STEERING/COLUMN - REMOVAL).

(5) Connect negative cable to battery.

(6) Check electrical operation of switch.

STEERING WHEEL

REMOVAL

For steering wheel removal procedure,(Refer to 8 - ELECTRICAL/RESTRAINTS/CLOCKSPRING - REMOVAL) .

INSTALLATION

For steering wheel installation procedure,(Refer to 8 - ELECTRICAL/RESTRAINTS/CLOCKSPRING - INSTALLATION).

GEAR

TABLE OF CONTENTS

page

GEAR
DESCRIPTION 15
OPERATION. 15
REMOVAL 15
INSTALLATION. 15
ADJUSTMENTS 17
SPECIFICATIONS 17
SPECIAL TOOLS 18
PITMAN SHAFT
REMOVAL 18
INSTALLATION. 19
PITMAN BEARING
REMOVAL 20
INSTALLATION. 21
PITMAN SHAFT SEAL
REMOVAL 22
INSTALLATION. 24
SPOOL VALVE
REMOVAL 25
INSTALLATION. 25
STEERING GEAR HOUSING PLUG
REMOVAL 27
INSTALLATION. 27
WORM SHAFT
REMOVAL 28
INSTALLATION. 28

GEAR

DESCRIPTION

The power steering gear is a recirculating ball type gear (Fig. 1).

The following gear components can be serviced:

- Pitman Shaft and Cover
- Pitman Shaft Bearings
- Pitman Shaft Oil Seal/Dust Seal
- Stud Shaft Housing with Seal
- O-Rings and Teflon Rings

NOTE: If rack piston assembly is damaged the gear must be replaced.

OPERATION

The gear acts as a rolling thread between the worm shaft and rack piston. The worm shaft is supported by a thrust bearing at the lower end and a bearing assembly at the upper end. When the worm shaft is turned the rack piston moves. The rack piston teeth mesh with the pitman shaft. Turning the worm shaft turns the pitman shaft, which turns the steering linkage.

REMOVAL

(1) Place the front wheels in the straight ahead position with the steering wheel centered and locked.

(2) Remove the air cleaner housing,(Refer to 9 - ENGINE/AIR INTAKE SYSTEM/AIR CLEANER HOUSING - REMOVAL).

(3) Drain or siphon the power steering system.

(4) Remove the pressure and return lines (Fig. 2)from the steering gear. Refer to hose removal in this section.

(5) Remove the column coupler shaft bolt (Fig. 2)and remove the shaft from the gear.

(6) Raise and support the vehicle.

(7) Remove the left front wheel and tire assembly.

(8) Remove the pitman arm from gear with Puller C-4150A .

(9) Remove the windshield washer reservoir,(Refer to 8 - ELECTRICAL/WIPERS/WASHERS/WASHER RESERVOIR - REMOVAL).

(10) Remove the steering gear mounting bolts. Remove the steering gear out of the engine compartment (Fig. 3).

INSTALLATION

(1) Position the steering gear on the frame rail and install the bolts. Tighten the bolts to 108 N·m (80 ft. lbs.) torque.

(2) Install the pitman arm and tighten nut to 251 N·m (185 ft. lbs.).

(3) Install windshield washer reservoir,(Refer to 8 - ELECTRICAL/WIPERS/WASHERS/WASHER RESERVOIR - INSTALLATION).

(4) Install the wheel and tire assembly.

(5) Remove the support and lower the vehicle.

(6) Install the pressure and return hoses to the steering gear and tighten to 20-38 N·m (14-28 ft. lbs.).

(7) Install the column coupler shaft.

(8) Install the air cleaner housing,(Refer to 9 - ENGINE/AIR INTAKE SYSTEM/AIR CLEANER HOUSING - INSTALLATION).

(9) Fill the power steering pump.

GEAR (Continued)

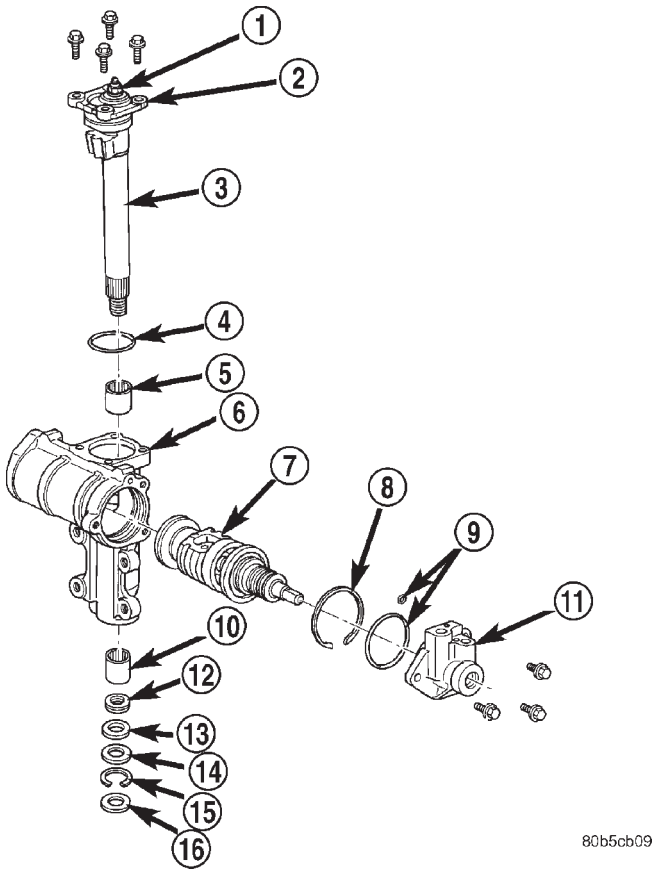

Fig. 1 Recirculating Ball Type Gear

1 - ADJUSTER NUT
2 - COVER
3 - PITMAN SHAFT
4 - O-RING
5 - BEARING
6 - GEAR HOUSING
7 - RACK PISTON
8 - RETAINING RING
9 - O-RING
10 - BEARING
11 - STUB SHAFT HOUSING
12 - PITMAN SHAFT SEAL
13 - PLASTIC BACKUP WASHER
14 - METAL BACKUP WASHER
15 - RETAINING RING
16 - DUST SEAL

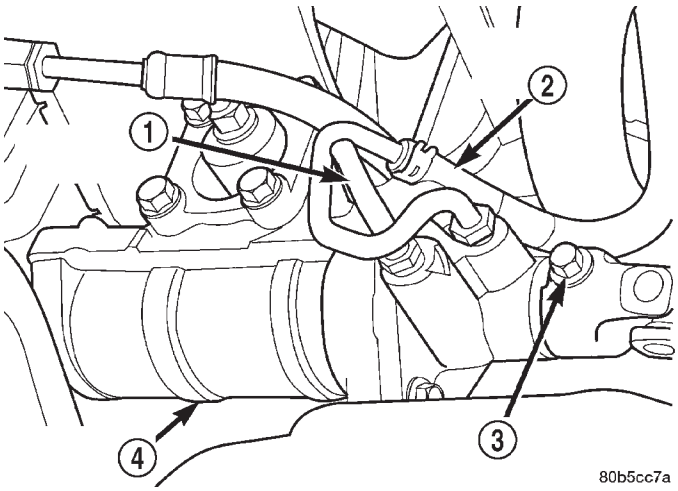

Fig. 2 Pressure And Return Lines

1 - PRESSURE LINE
2 - RETURN LINE
3 - COUPLER BOLT
4 - STEERING GEAR

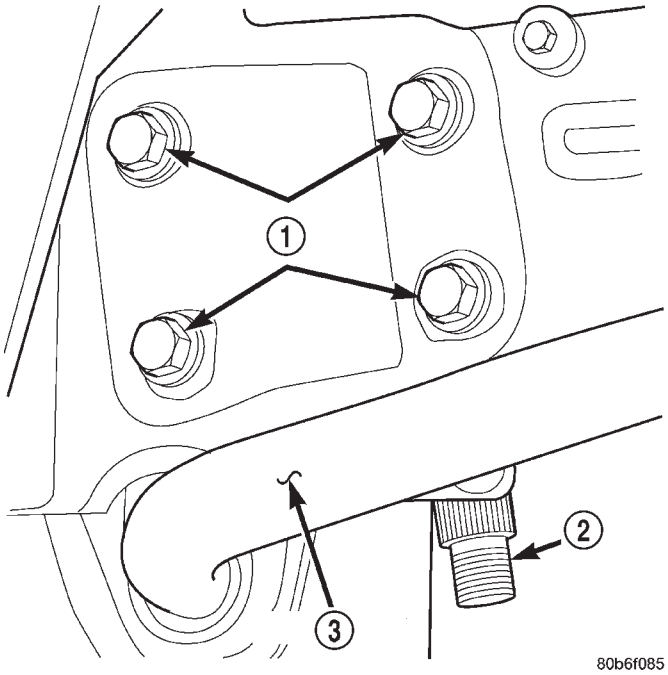

Fig. 3 Steering Gear Mounting

1 - MOUNTING BOLTS
2 - PITMAN SHAFT
3 - STABILIZER BAR

GEAR (Continued)

ADJUSTMENTS — STEERING GEAR

NOTE: Adjusting the steering gear in the vehicle is not recommended. Remove gear from the vehicle and drain the fluid. Then mount gear in a vise to perform adjustments.

OVER-CENTER

(1) Rotate the stub shaft with Socket 8343 from stop to stop and count the number of turns.

(2) Center the stub shaft by rotating it from the stop 1/2 of the total amount of turns.

(3) Place torque wrench and Socket 8343 in a vertical position on the stub shaft. Rotate the wrench 45 degrees each side of the center and record the highest rotational torque in this range (Fig. 4). This is the Over-Center Rotating Torque.

NOTE: The stub shaft must rotate smoothly without sticking or binding.

(4) Rotate the stub shaft between 90° and 180° to the left of center and record the left off-center preload. Repeat this to the right of center and record the right off-center preload. The average of these two recorded readings is the Preload Rotating Torque.

(5) The Over-Center Rotating Torque should be 0.45-0.80 N·m (4-7 in. lbs.) **higher** than the Preload Rotating Torque.

(6) If an adjustment to the Over-Center Rotating Torque is necessary, first loosen the adjuster lock nut. Then turn the pitman shaft adjuster screw back (COUNTERCLOCKWISE) until fully extended, then turn back in (CLOCKWISE) one full turn.

(7) Remeasure Over-Center Rotating Torque. If necessary turn the adjuster screw and repeat measurement until correct Over-Center Rotating Torque is reached.

NOTE: To increase the Over-Center Rotating Torque turn the screw CLOCKWISE.

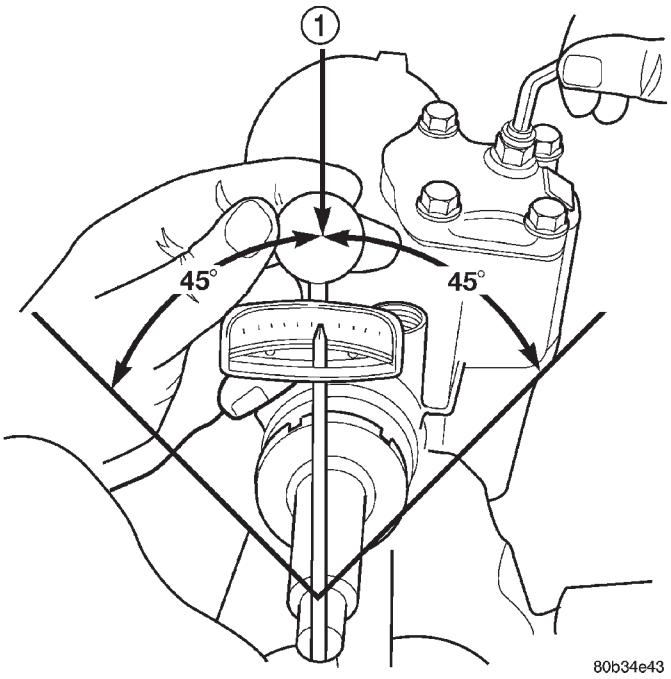

Fig. 4 Checking Over-center Rotation Torque

1 - CENTER

(8) Prevent the adjuster screw from turning while tightening adjuster lock nut. Tighten the adjuster lock nut to 37-52 N·m (27-38 ft. lbs.).

SPECIFICATIONS

POWER STEERING GEAR

SPECIFICATIONS

DESCRIPTION	SPECIFICATION
Steering Gear Type	Recirculating Ball
Steering Gear Overall Ratio	12.7:1

TORQUE SPECIFICATIONS

DESCRIPTION	N·m	Ft. Lbs.	In. Lbs.
Pitman Shaft Overcenter Drag New Gear (under 400 miles)	0.45-0.80 + Worm Shaft Preload	—	4-7 + Worm Shaft Preload
Pitman Shaft Overcenter Drag Used Gear (over 400 miles)	0.5-0.6 + Worm Shaft Preload	—	4-5 + Worm Shaft Preload

SPECIAL TOOLS

POWER STEERING GEAR

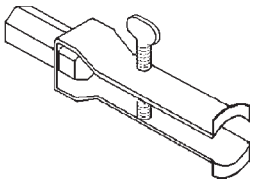

Puller Seal 7794-A

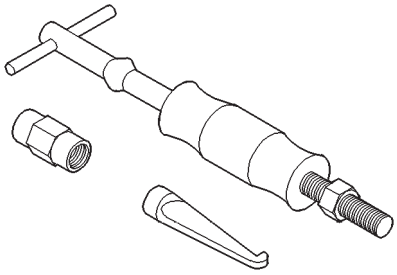

Slide Hammer C-637

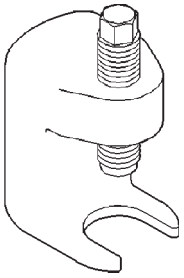

Remover, Pitman Arm C-4150A

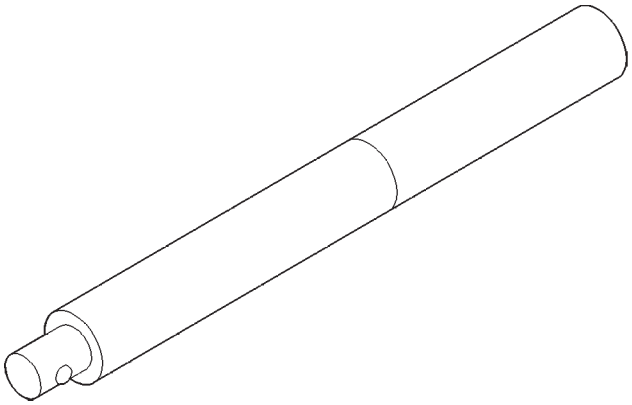

Handle C-4171

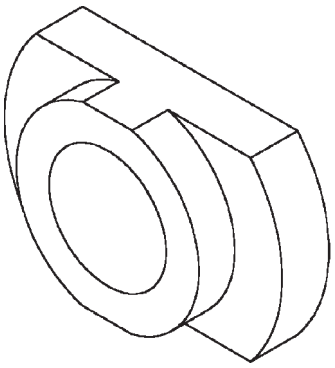

Driver 8277

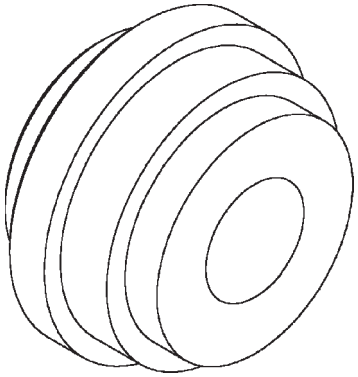

Driver 8294

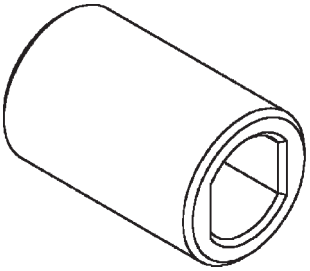

Scoket 8343

PITMAN SHAFT

REMOVAL

(1) Clean exposed end of pitman shaft and housing with a wire brush.

(2) Remove preload adjuster nut (Fig. 5).

(3) Rotate the stub shaft with a 12 point socket from stop to stop and count the number of turns.

(4) Center the stub shaft by rotating it from the stop 1/2 of the total amount of turns.

(5) Remove side cover bolts and remove side cover, gasket and pitman shaft as an assembly (Fig. 5).

NOTE: The pitman shaft will not clear the housing if it is not centered.

(6) Remove pitman shaft from the side cover.

(7) Remove dust seal from the housing with a seal pick (Fig. 6).

CAUTION: Use care not to score the housing bore when prying out seals and washer.

(8) Remove retaining ring with snap ring pliers.

(9) Remove washer from the housing.

PITMAN SHAFT (Continued)

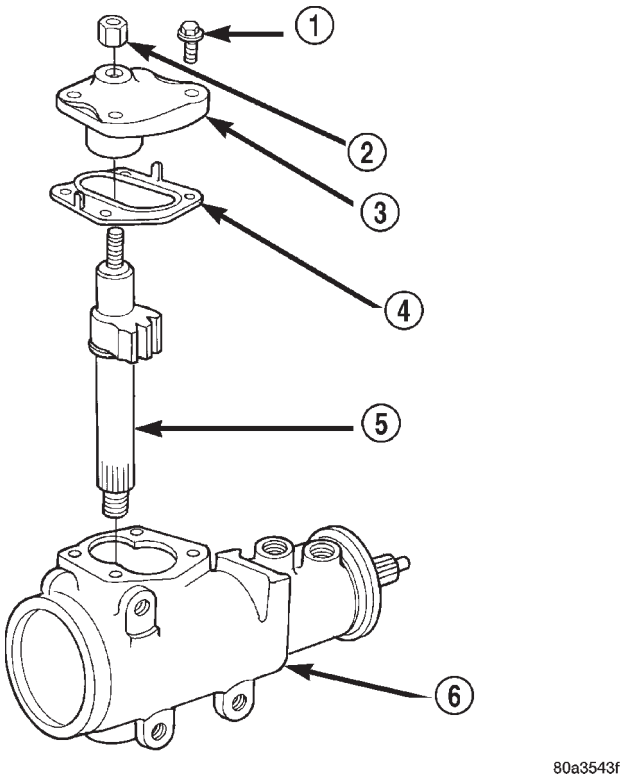

Fig. 5 Side Cover and Pitman Shaft

1 - SIDE COVER BOLTS
2 - PRELOAD ADJUSTER NUT
3 - SIDE COVER
4 - GASKET SEAL
5 - PITMAN SHAFT GEAR
6 - HOUSING ASSEMBLY

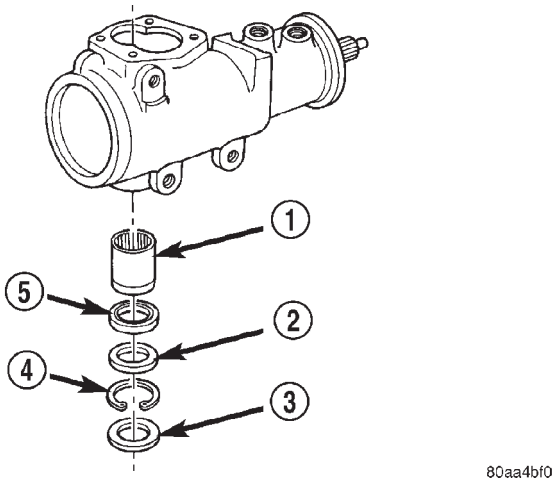

Fig. 6 Pitman Shaft Seals & Bearing

1 - BEARING
2 - WASHER
3 - DUST SEAL
4 - RETAINER
5 - OIL SEAL

(10) Remove oil seal from the housing with a seal pick.

(11) Remove pitman shaft bearing from housing with a bearing driver and handle (Fig. 7).

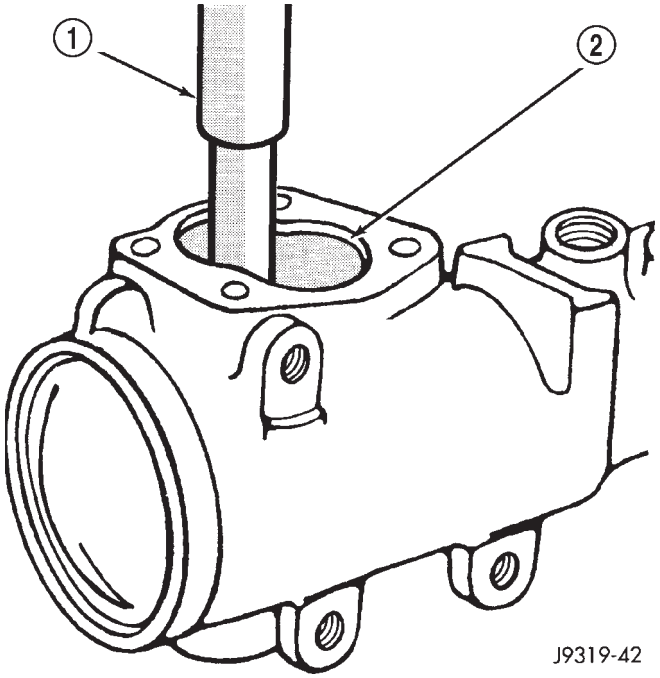

Fig. 7 Needle Bearing Removal

1 - REMOVER
2 - SIDE COVER AREA

INSTALLATION

(1) Install pitman shaft bearing into housing with a bearing driver and handle.

(2) Coat the oil seal and washer with **special grease** supplied with the new seal.

(3) Install the oil seal with a driver and handle.

(4) Install backup washer.

(5) Install the retainer ring with snap ring pliers.

(6) Coat the dust seal with **special grease** supplied with the new seal.

(7) Install dust seal with a driver and handle.

(8) Install pitman shaft to side cover by screwing shaft in until it fully seats to side cover.

(9) Install preload adjuster nut. **Do not tighten nut until after Over-Center Rotation Torque adjustment has been made.**

(10) Install gasket to side cover and bend tabs around edges of side cover (Fig. 5).

(11) Install pitman shaft assembly and side cover to housing.

(12) Install side cover bolts and tighten to 60 N·m (44 ft. lbs.).

(13) Perform over-center rotation torque adjustment.

PITMAN BEARING

REMOVAL

(1) Clean exposed end of pitman shaft and housing with a wire brush.

(2) Rotate the stub shaft with a wrench (Fig. 8)from stop to stop and count the number of turns.

(3) Center the stub shaft by rotating it from the stop 1/2 of the total amount of turns.

NOTE: The pitman shaft will not clear the housing if it is not centered.

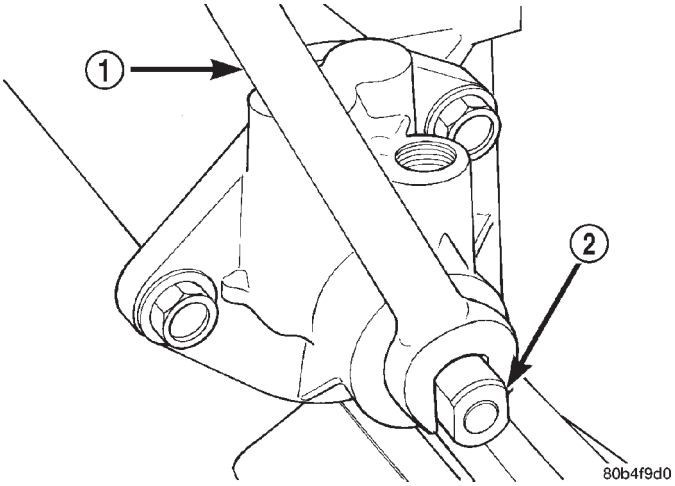

Fig. 8 Center Stub

1 - WRENCH
2 - STUB SHAFT

(4) Remove pitman shaft cover bolts and remove the shaft assembly (Fig. 9).

(5) Remove pitman shaft cover o-ring.

(6) Remove pitman shaft dust seal from the housing with a Puller 7794-A and Slide Hammer C-637 (Fig. 10).

(7) Remove the pitman shaft oil seal retaining ring with snap ring pliers (Fig. 11).

(8) Remove oil seal metal backup washer then plastic backup washer from the housing (Fig. 12).

(9) Remove pitman shaft oil seal from the housing with a Puller 7794-A and Slide Hammer C-637 (Fig. 13).

(10) Drop Driver 8277 through the top bearing and align the driver up with the lower bearing. (Fig. 14). Install Handle C-4171 into the driver and remove the lower bearing.

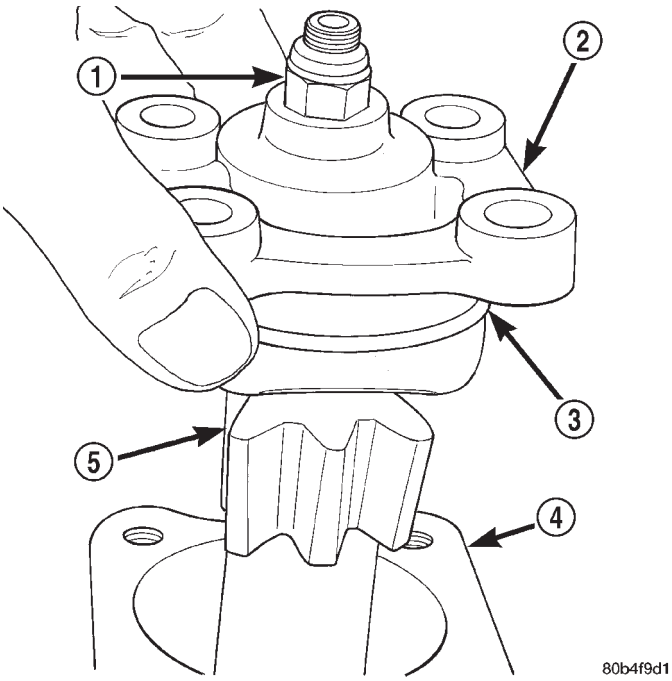

Fig. 9 Cover and Pitman Shaft

1 - ADJUSTER NUT
2 - PITMAN SHAFT COVER
3 - O-RING
4 - GEAR HOUSING
5 - PITMAN SHAFT

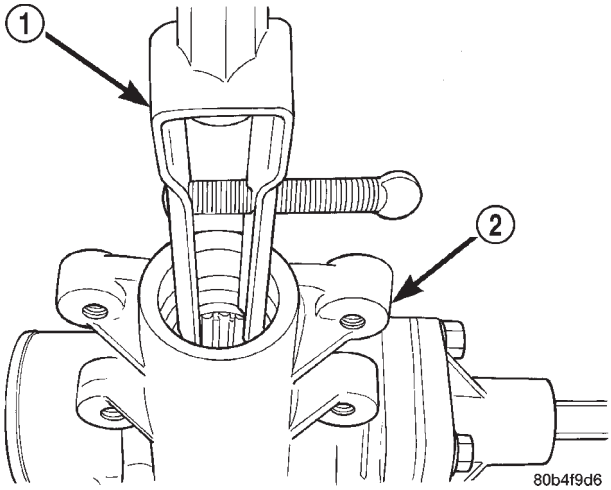

Fig. 10 Oil Seal Removal

1 - PULLER
2 - STEERING GEAR

PITMAN BEARING (Continued)

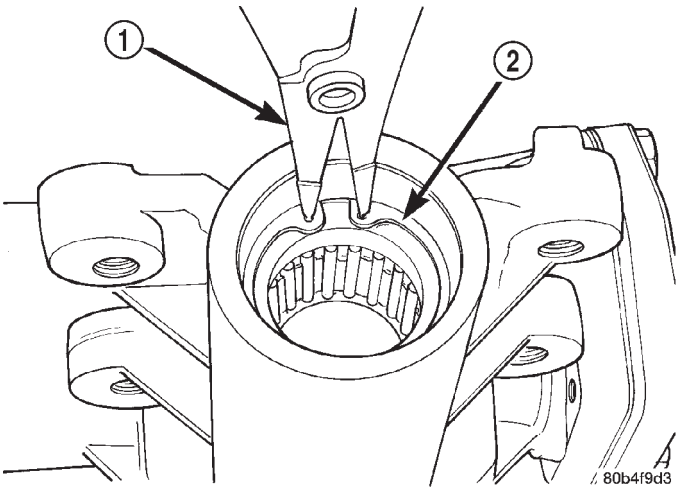

Fig. 11 Oil Seal Retaining Ring

1 - SNAP RING PLIERS
2 - RETAINING RING

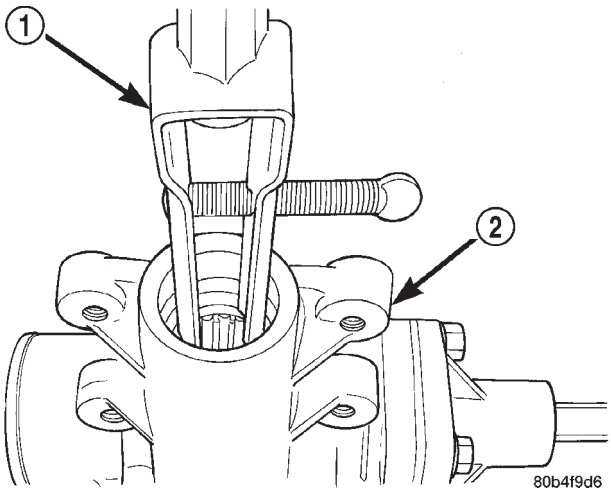

Fig. 13 Oil Seal Removal

1 - PULLER
2 - STEERING GEAR

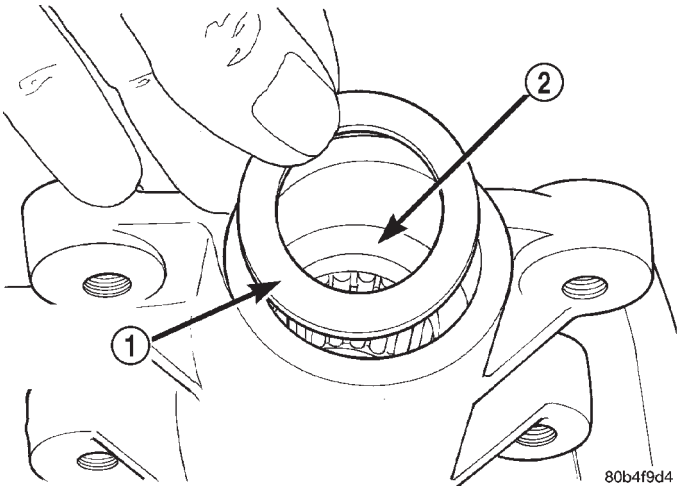

Fig. 12 Backup Washers

1 - METAL BACK UP WASHER
2 - PLASTIC BACK UP WASHER

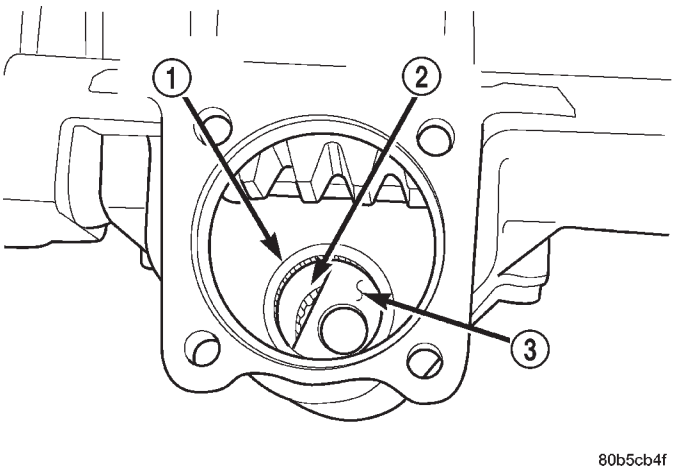

Fig. 14 Bearing Driver

1 - UPPER BEARING
2 - LOWER BEARING
3 - DRIVER

(11) Turn the gear over and remover the upper bearing with Driver 8277 and Handle C-4171.

INSTALLATION

(1) Install upper pitman shaft bearing, with Driver 8294 and Handle C-4171 (Fig. 15). Drive bearing into housing until the driver bottoms out.

NOTE: Install upper pitman shaft bearing with the part number/letters facing the driver.

(2) Install lower pitman shaft bearing with the other side Driver 8294 and Handle C-4171 (Fig. 16). Drive bearing into housing until the bearing shoulder is seated against the housing.

PITMAN BEARING (Continued)

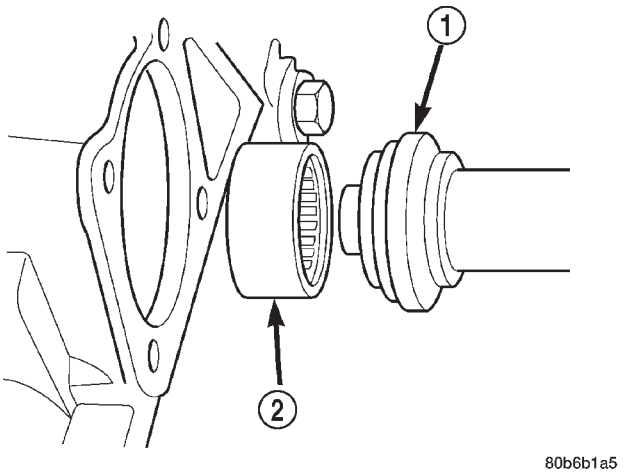

Fig. 15 Upper Pitman

1 - DRIVER
2 - UPPER BEARING

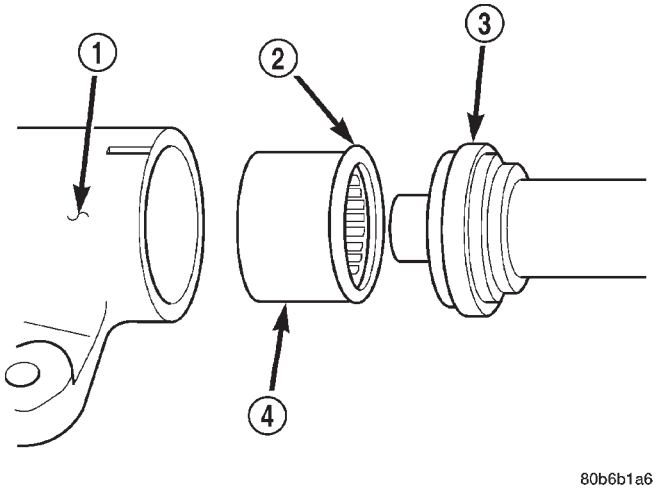

Fig. 16 Lower Pitman Shaft Bearing

1 - STEERING GEAR
2 - BEARING SHOULDER
3 - DRIVER
4 - LOWER BEARING

(3) Coat the oil seal and backup washers with **special grease**supplied with the new seal.

(4) Install the oil seal with Driver 8294 and Handle C-4171.

(5) Install plastic backup washer.

NOTE: The plastic backup washer has a lip on the inside diameter that faces down towards the oil seal.

(6) Install metal backup washer.

(7) Install the retainer ring with snap ring pliers.

(8) Coat the dust seal with **special grease** supplied with the new seal.

(9) Install dust seal with Driver 8294 and Handle C-4171.

(10) Install new pitman shaft cover o-ring.

(11) Install pitman shaft assembly into the housing.

(12) Install cover bolts and tighten to 62 N·m (46 ft. lbs.).

(13) Perform over-center rotation torque adjustment.

PITMAN SHAFT SEAL

REMOVAL

(1) Clean exposed end of pitman shaft and housing with a wire brush.

(2) Rotate the stub shaft with a wrench (Fig. 17)from stop to stop and count the number of turns.

(3) Center the stub shaft by rotating it from the stop 1/2 of the total amount of turns.

NOTE: The pitman shaft will not clear the housing if it is not centered.

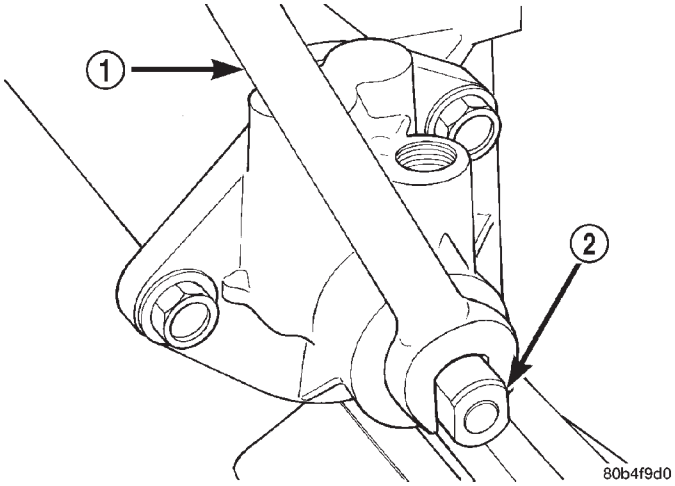

Fig. 17 Center Stub

1 - WRENCH
2 - STUB SHAFT

(4) Remove pitman shaft cover bolts and remove the shaft assembly (Fig. 18).

(5) Remove pitman shaft cover o-ring.

PITMAN SHAFT SEAL (Continued)

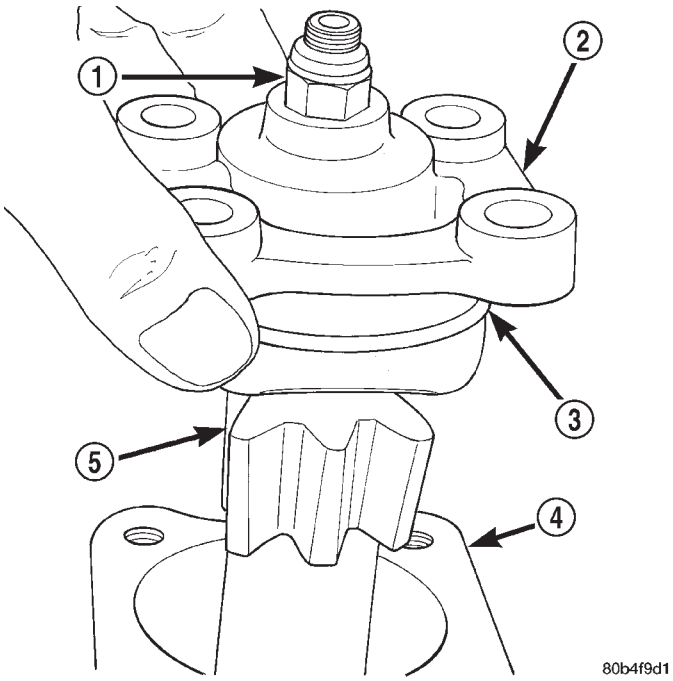

Fig. 18 Cover and Pitman Shaft

1 - ADJUSTER NUT
2 - PITMAN SHAFT COVER
3 - O-RING
4 - GEAR HOUSING
5 - PITMAN SHAFT

(6) Remove pitman shaft dust seal from the housing with a Puller 7794-A and Slide Hammer C-637 (Fig. 19).

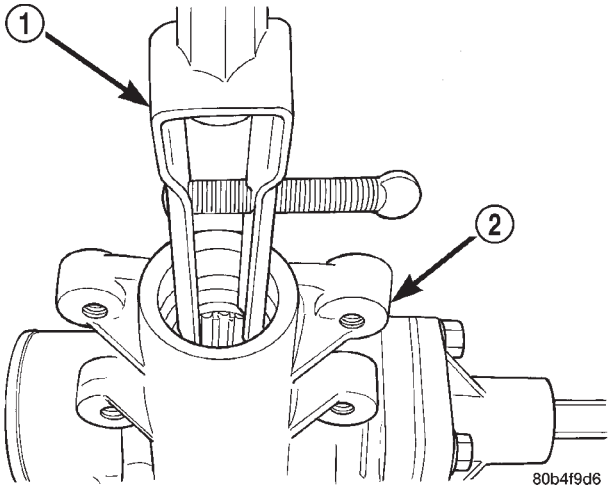

Fig. 19 Oil Seal Removal

1 - PULLER
2 - STEERING GEAR

(7) Remove the pitman shaft oil seal retaining ring with snap ring pliers (Fig. 20).

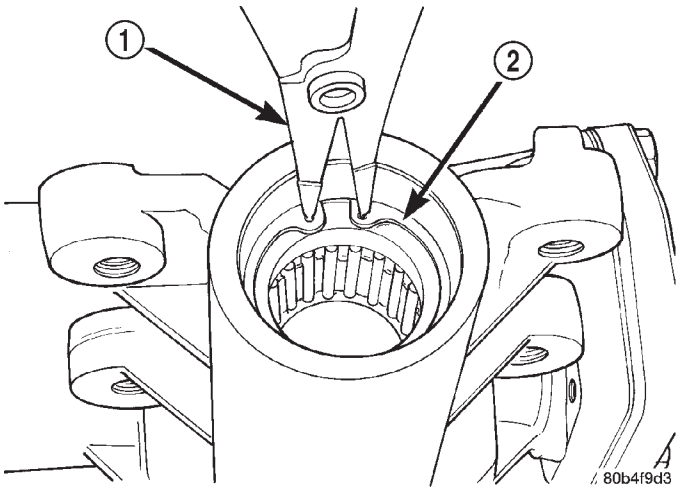

Fig. 20 Oil Seal Retaining Ring

1 - SNAP RING PLIERS
2 - RETAINING RING

(8) Remove oil seal metal backup washer then plastic backup washer from the housing (Fig. 21).

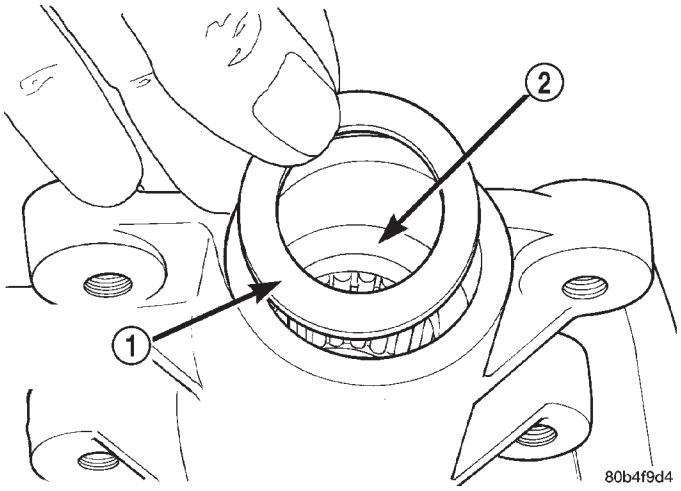

Fig. 21 Backup Washers

1 - METAL BACK UP WASHER
2 - PLASTIC BACK UP WASHER

(9) Remove pitman shaft oil seal from the housing with a Puller 7794-A and Slide Hammer C-637 (Fig. 22).

(10) Drop Driver 8277 through the top bearing and align the driver up with the lower bearing. (Fig. 23). Install Handle C-4171 into the driver and remove the lower bearing.

(11) Turn the gear over and remover the upper bearing with Driver 8277 and Handle C-4171.

PITMAN SHAFT SEAL (Continued)

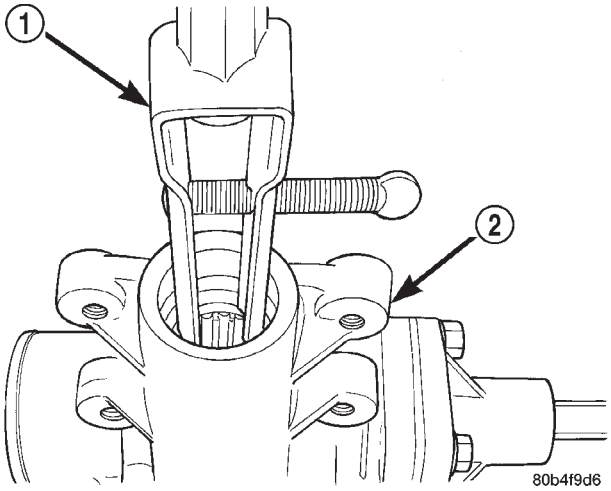

Fig. 22 Oil Seal Removal

1 - PULLER
2 - STEERING GEAR

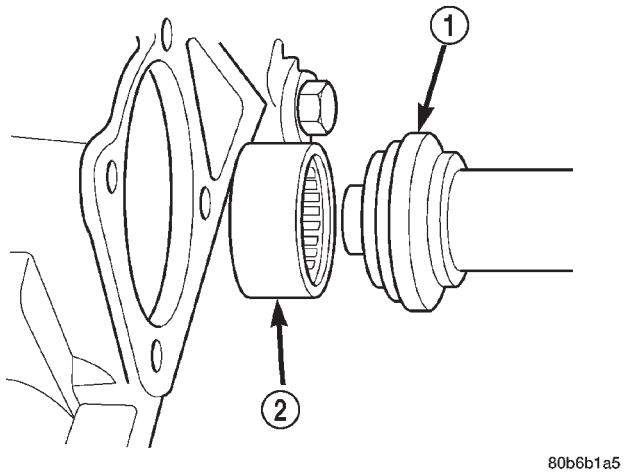

Fig. 24 Upper Pitman Shaft Bearing

1 - DRIVER
2 - UPPER BEARING

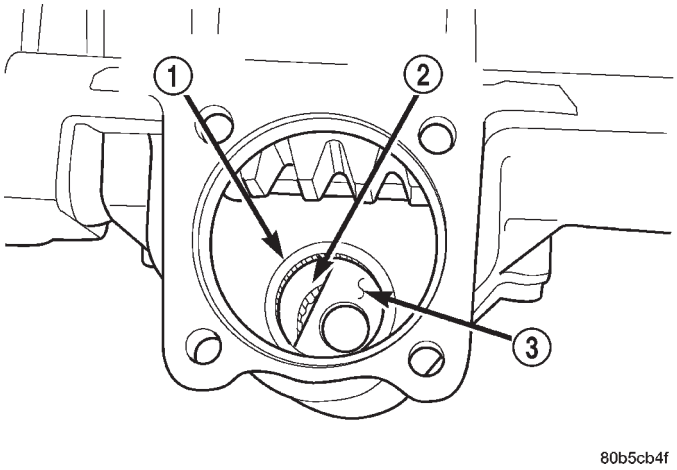

Fig. 23 Bearing Driver

1 - UPPER BEARING
2 - LOWER BEARING
3 - DRIVER

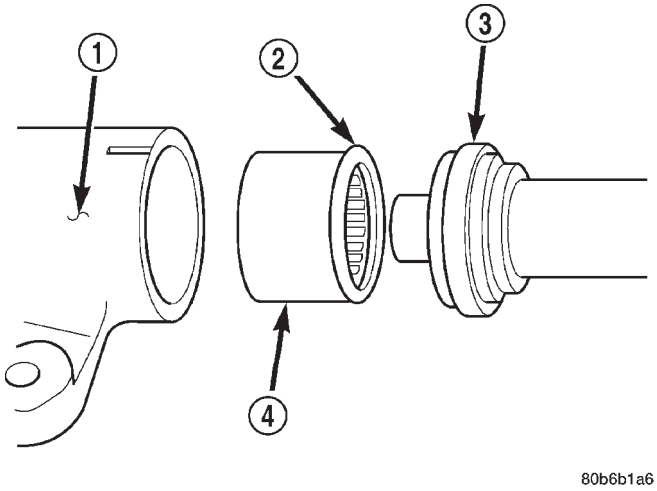

Fig. 25 Lower Pitman Shaft Bearing

1 - STEERING GEAR
2 - BEARING SHOULDER
3 - DRIVER
4 - LOWER BEARING

INSTALLATION

(1) Install upper pitman shaft bearing, with Driver 8294 and Handle C-4171 (Fig. 24). Drive bearing into housing until the driver bottoms out.

NOTE: Install upper pitman shaft bearing with the part number/letters facing the driver.

(2) Install lower pitman shaft bearing with the other side Driver 8294 and Handle C-4171 (Fig. 25). Drive bearing into housing until the bearing shoulder is seated against the housing.

(3) Coat the oil seal and backup washers with **special grease**supplied with the new seal.

(4) Install the oil seal with Driver 8294 and Handle C-4171.

(5) Install plastic backup washer.

NOTE: The plastic backup washer has a lip on the inside diameter that faces down towards the oil seal.

(6) Install metal backup washer.

(7) Install the retainer ring with snap ring pliers.

(8) Coat the dust seal with **special grease** supplied with the new seal.

(9) Install dust seal with Driver 8294 and Handle C-4171.

PITMAN SHAFT SEAL (Continued)

(10) Install new pitman shaft cover o-ring.

(11) Install pitman shaft assembly into the housing.

(12) Install cover bolts and tighten to 62 N·m (46 ft. lbs.).

(13) Perform over-center rotation torque adjustment.

SPOOL VALVE

REMOVAL

(1) Remove lock nut (Fig. 26).

(2) Remove adjuster nut with Spanner Wrench C-4381.

(3) Remove thrust support assembly out of the housing (Fig. 27).

(4) Pull stub shaft and valve assembly from the housing (Fig. 28).

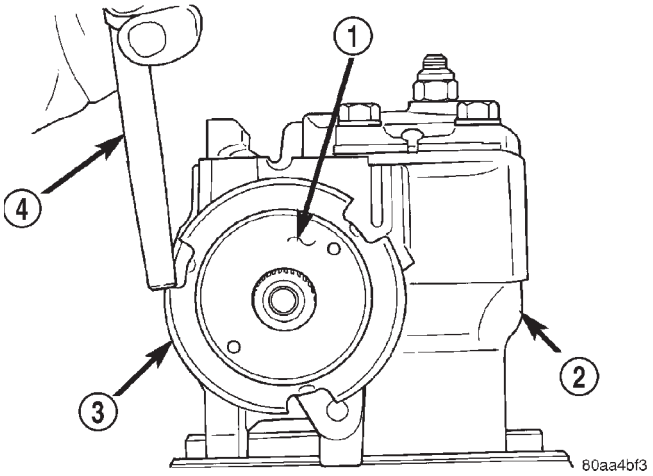

Fig. 26 Lock Nut and Adjuster Nut

1 - ADJUSTER NUT
2 - STEERING GEAR
3 - LOCK NUT
4 - PUNCH

(5) Remove stub shaft from valve assembly by lightly tapping shaft on a block of wood to loosen shaft. Then disengage stub shaft pin from hole in spool valve and separate the valve assembly from stub shaft (Fig. 29).

(6) Remove spool valve from valve body by pulling and rotating the spool valve from the valve body (Fig. 30).

(7) Remove spool valve O-ring and valve body teflon rings and O-rings underneath the teflon rings (Fig. 31).

(8) Remove the O-ring between the worm shaft and the stub shaft.

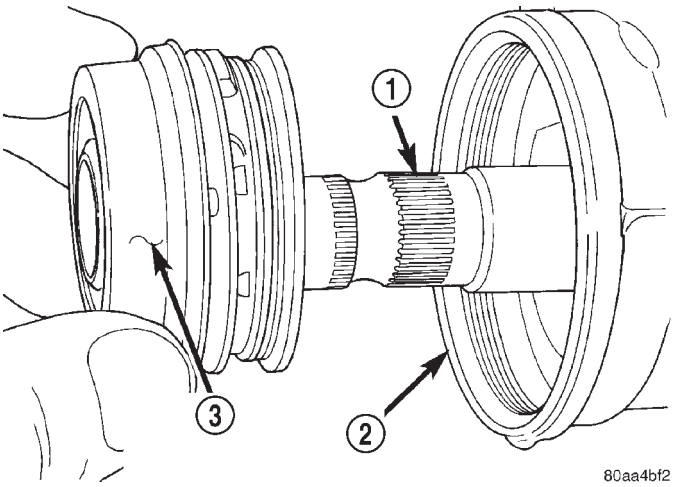

Fig. 27 Thrust Support Assembly

1 - STUB SHAFT
2 - HOUSING
3 - THRUST SUPPORT ASSEMBLY

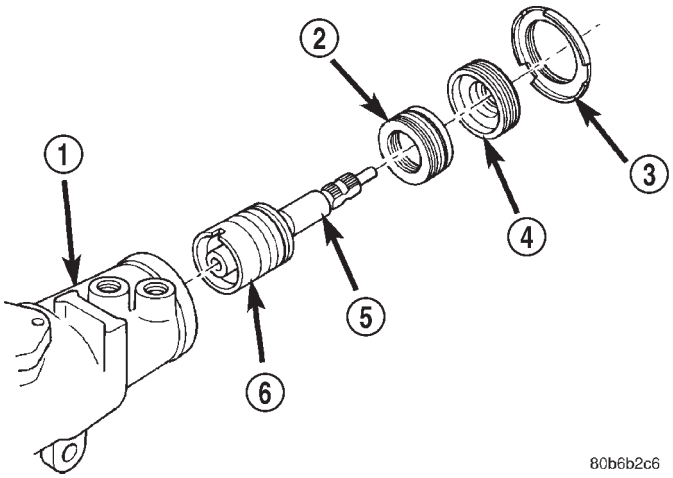

Fig. 28 Valve Assembly With Stub Shaft

1 - GEAR
2 - THRUST SUPPORT
3 - LOCK NUT
4 - ADJUSTER NUT
5 - STUB SHAFT
6 - VALVE ASSEMBLY

INSTALLATION

NOTE: Clean and dry all components, then lubricate with power steering fluid.

(1) Install spool valve spool O-ring.

(2) Install spool valve in valve body by pushing and rotating. Hole in spool valve for stub shaft pin must be accessible from opposite end of valve body.

SPOOL VALVE (Continued)

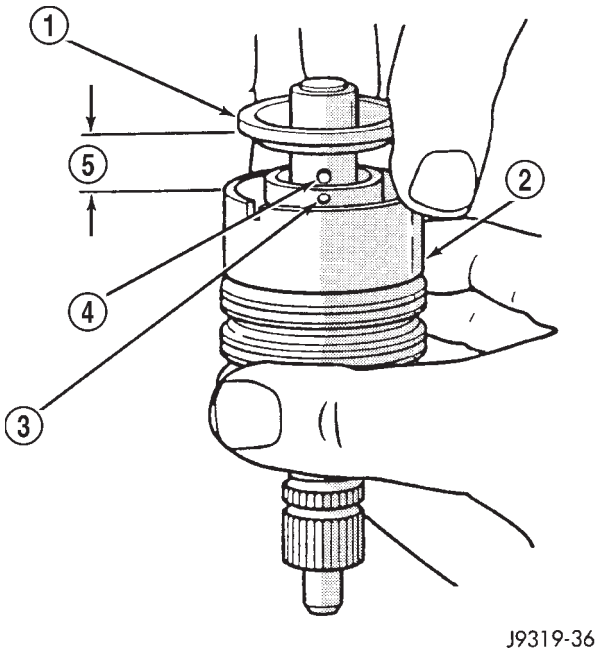

Fig. 29 Stub Shaft

1 - STUB SHAFT
2 - VALVE BODY
3 - HOLE IN SPOOL
4 - SHAFT PIN
5 - 6mm (1/4″)

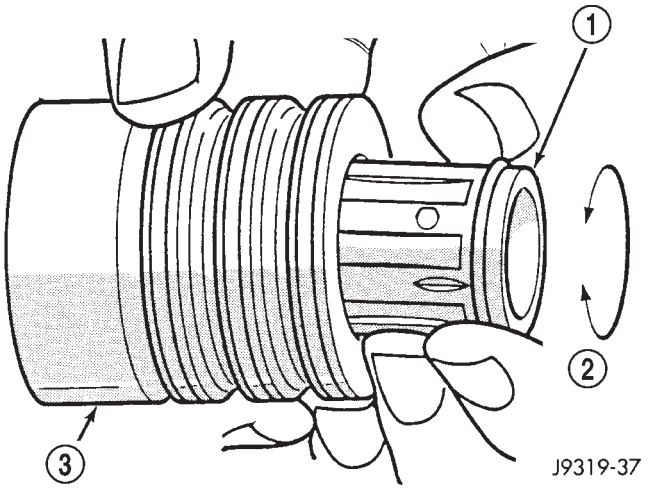

Fig. 30 Spool Valve

1 - SPOOL VALVE
2 - ROTATE VALVE TO REMOVE
3 - VALVE BODY

NOTE: Notch in stub shaft cap must fully engage valve body pin and seat against valve body shoulder.

(3) Install stub shaft in valve spool and engage locating pin on stub shaft into spool valve hole (Fig. 32).

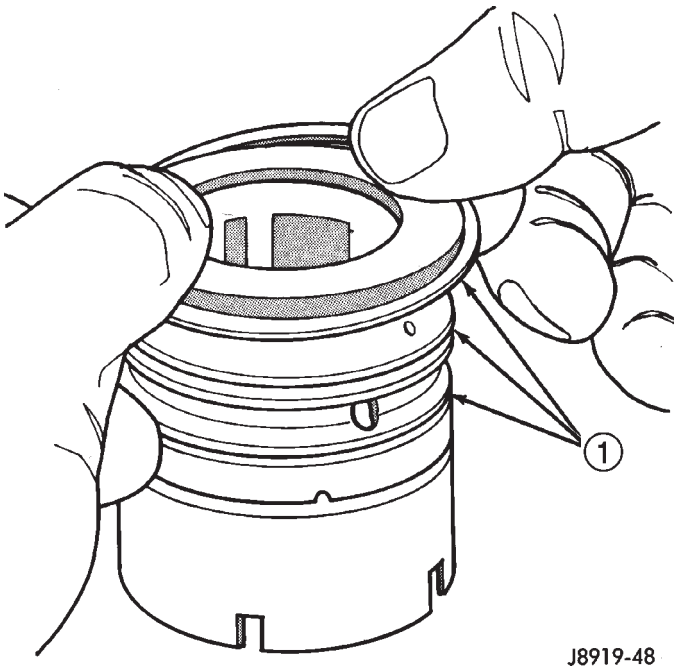

Fig. 31 Valve Seals

1 - O-RING SEALS

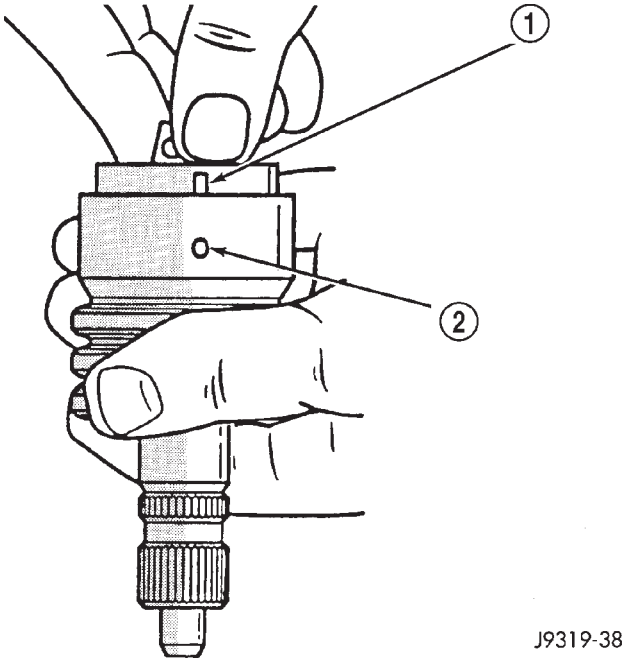

Fig. 32 Stub Shaft Installation

1 - NOTCH IN CAP
2 - VALVE BODY PIN

(4) Install O-rings and teflon rings over the O-rings on valve body.

(5) Install O-ring into the back of the stub shaft cap (Fig. 33).

SPOOL VALVE (Continued)

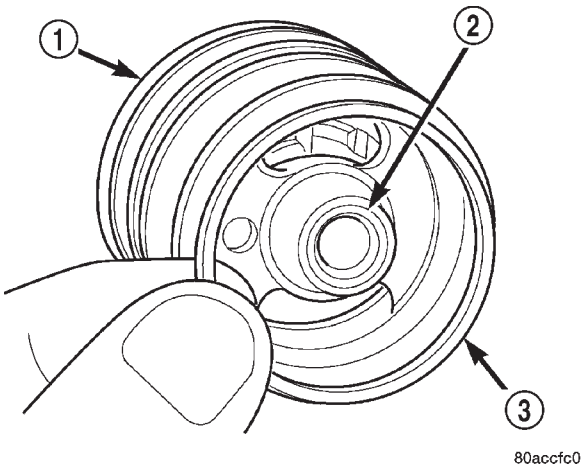

Fig. 33 Stub Shaft Cap O-Ring

1 - VALVE BODY
2 - STUB SHAFT CAP
3 - O-RING

(6) Install stub shaft and valve assembly in the housing. Line up worm shaft to slots in the valve assembly.

NOTE: The thrust support is serviced as an assembly. If any component of the thrust support is damaged the assembly must be replaced.

(7) Install thrust support assembly.
(8) Install adjuster nut and lock nut.
(9) Adjust Thrust Bearing Preload and Over-Center Rotating Torque.

STEERING GEAR HOUSING PLUG

REMOVAL

(1) Unseat and remove retaining ring from groove with a punch through the hole in the end of the housing (Fig. 34).
(2) Slowly rotate stub shaft with 12 point socket COUNTER-CLOCKWISE to force the end plug out from housing.

CAUTION: Do not turn stub shaft any further than necessary. The rack piston balls will drop out of the rack piston circuit if the stub shaft is turned too far.

(3) Remove O-ring from the housing (Fig. 35).

INSTALLATION

(1) Lubricate O-ring with power steering fluid and install into the housing.
(2) Install end plug by tapping the plug lightly with a plastic mallet into the housing.

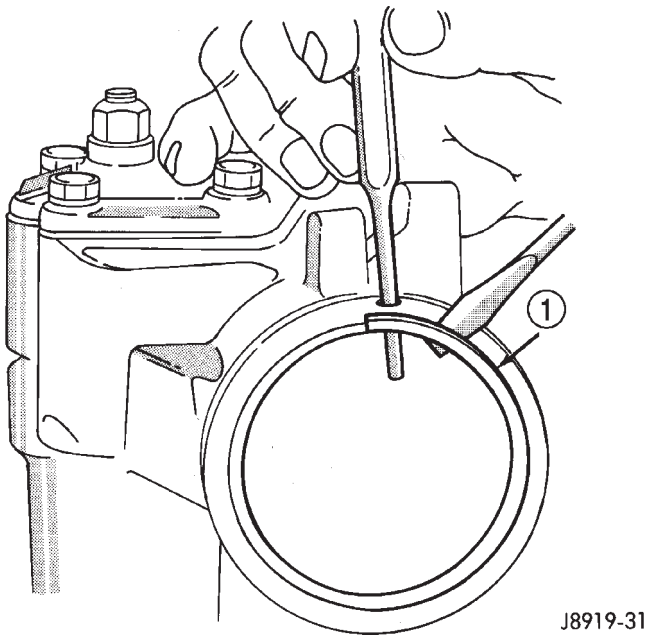

Fig. 34 End Plug Retaining Ring

1 - RETAINING RING

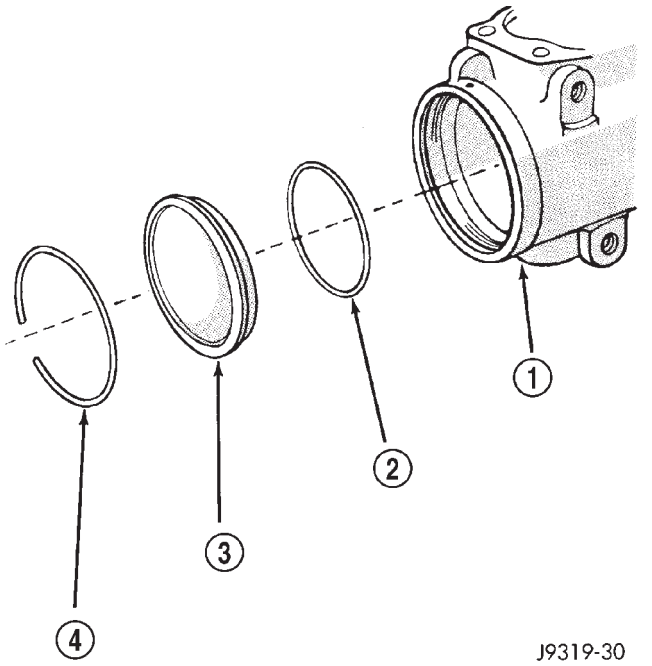

Fig. 35 End Plug Components

1 - HOUSING ASSEMBLY
2 - HOUSING END PLUG O-RING SEAL
3 - HOUSING END PLUG
4 - RETAINING RING

(3) Install retaining ring so one end of the ring covers the housing access hole (Fig. 36).

WORM SHAFT (Continued)

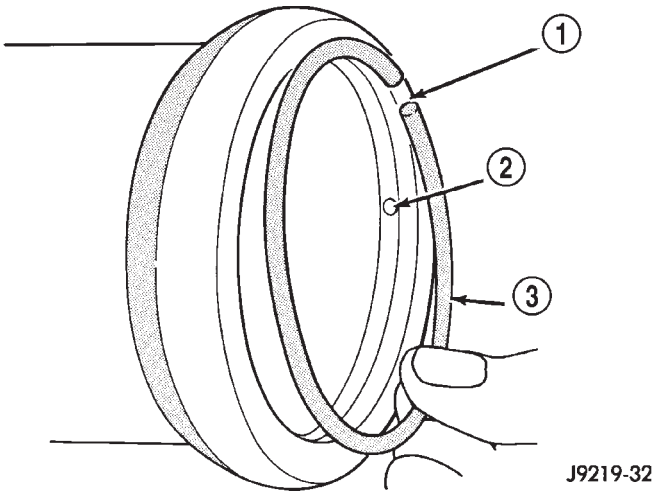

Fig. 36 Installing The Retaining Ring

1 - RING CAP
2 - PUNCH ACCESS HOLE
3 - RETAINER RING

WORM SHAFT

REMOVAL

(1) Remove housing end plug.
(2) Remove rack piston plug (Fig. 37).
(3) Remove side cover and pitman shaft.

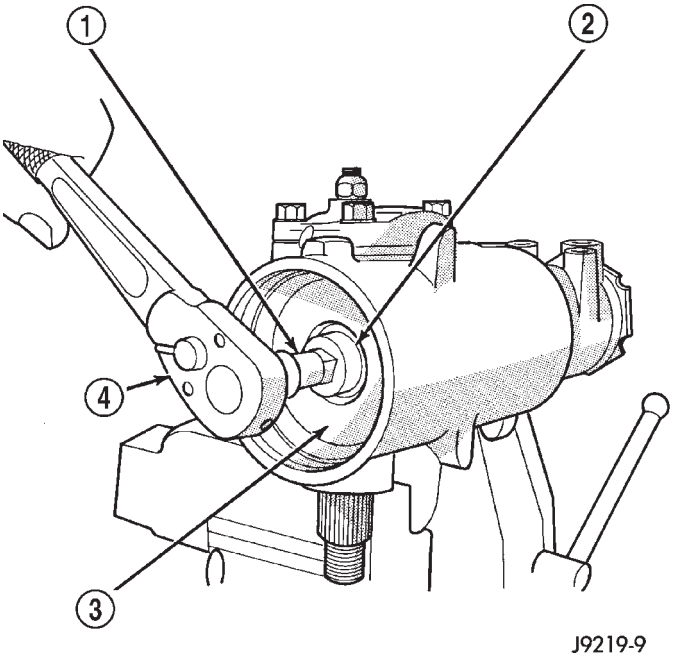

Fig. 37 Rack Piston End Plug

1 - EXTENSION
2 - END PLUG
3 - RACK PISTON
4 - RATCHET

(4) Turn stub shaft COUNTERCLOCKWISE until the rack piston begins to come out of the housing.
(5) Insert Arbor C-4175 into bore of rack piston (Fig. 38) and hold tool tightly against worm shaft.
(6) Turn the stub shaft with a 12 point socket COUNTERCLOCKWISE, this will force the rack piston onto the tool and hold the rack piston balls in place.

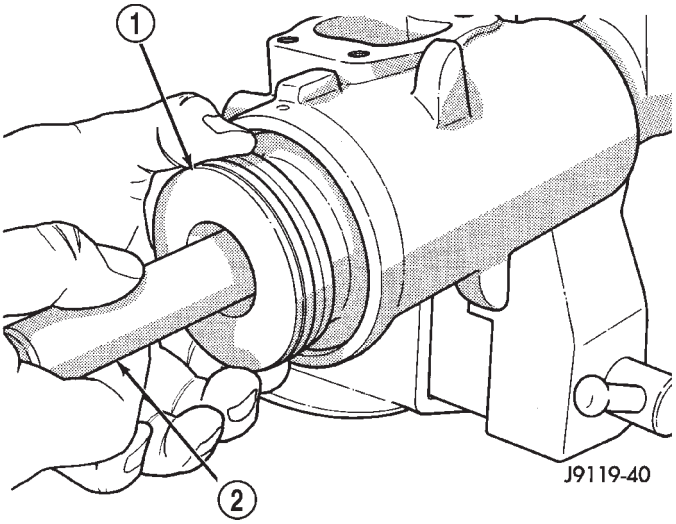

Fig. 38 Rack Piston with Arbor

1 - RACK PISTON
2 - SPECIAL TOOL C-4175

(7) Remove the rack piston and tool together from housing.
(8) Remove tool from rack piston.
(9) Remove rack piston balls.
(10) Remove clamp bolts, clamp and ball guide (Fig. 39).
(11) Remove teflon ring and O-ring from the rack piston (Fig. 40).
(12) Remove the adjuster lock nut and adjuster nut from the stub shaft.
(13) Pull the stub shaft with the spool valve and thrust support assembly out of the housing.
(14) Remove the worm shaft from the housing (Fig. 41).

INSTALLATION

NOTE: Clean and dry all components and lubricate with power steering fluid.

(1) Check for scores, nicks or burrs on the rack piston finished surface. Slight wear is normal on the worm gear surfaces.
(2) Install O-ring and teflon ring on the rack piston.

WORM SHAFT (Continued)

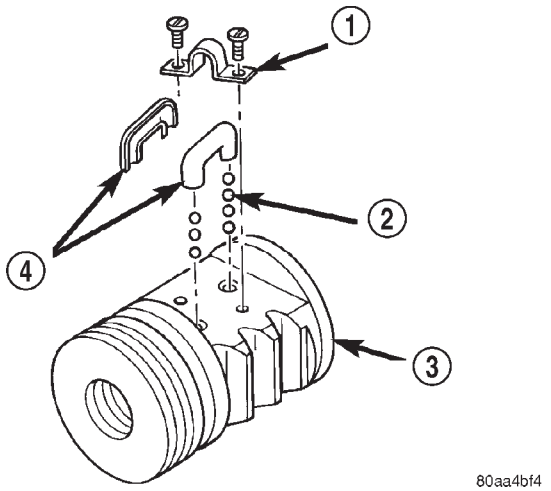

Fig. 39 Rack Piston

1 - CLAMP
2 - BALLS
3 - RACK PISTON
4 - BALL GUIDE

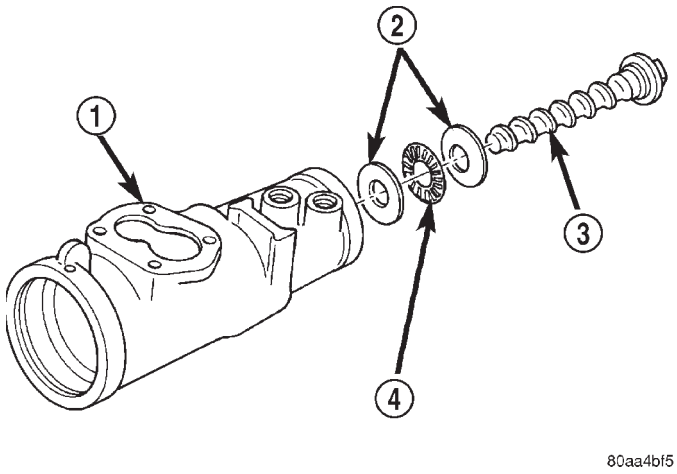

Fig. 41 Worm Shaft

1 - GEAR HOUSING
2 - BEARING RACE
3 - WORM SHAFT
4 - BEARING

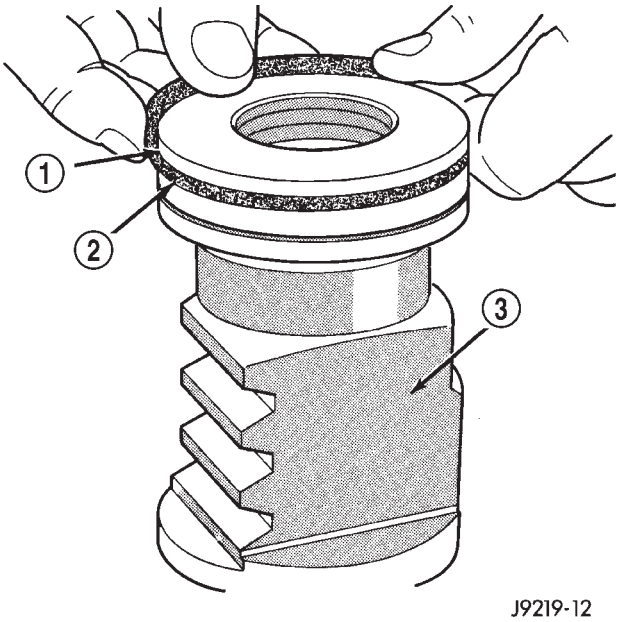

Fig. 40 Rack Piston Teflon Ring and O-Ring

1 - TEFLON SEAL
2 - BACK-UP O-RING MUST BE INSTALLED UNDER PISTON RING
3 - RACK PISTON NUT

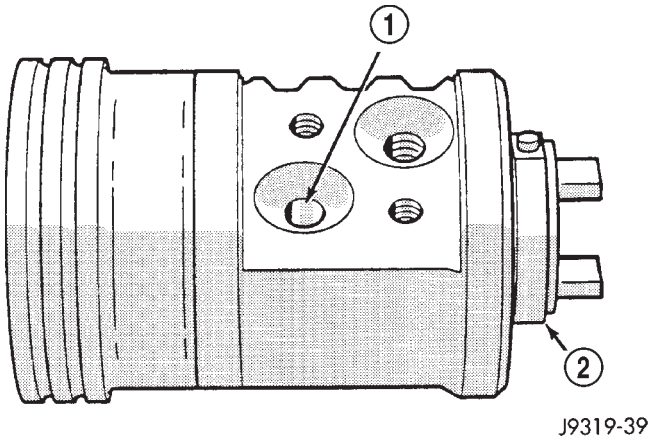

Fig. 42 Installing Balls in Rack Piston

1 - INSTALL BALLS IN THIS HOLE WHILE SLOWLY ROTATING WORM COUNTER CLOCKWISE
2 - WORM FLANGE

(3) Install worm shaft in the rack piston and align worm shaft spiral groove with rack piston ball guide hole (Fig. 42).

CAUTION: The rack piston balls must be installed alternately into the rack piston and ball guide. This maintains worm shaft preload. There are 12 black balls and 12 silver (Chrome) balls. The black balls are smaller than the silver balls.

(4) Lubricate and install rack piston balls through return guide hole while turning worm shaft COUNTERCLOCKWISE (Fig. 42).

(5) Install remaining balls in guide using grease to hold the balls in place (Fig. 43).

(6) Install the guide onto rack piston and install clamp and clamp bolts. Tighten bolts to 4.8 N·m (43 in. lbs.).

(7) Insert Arbor C-4175 into bore of rack piston and hold tool tightly against worm shaft.

(8) Turn the worm shaft COUNTERCLOCKWISE while pushing on the arbor. This will force the rack piston onto the arbor and hold the rack piston balls in place.

WORM SHAFT (Continued)

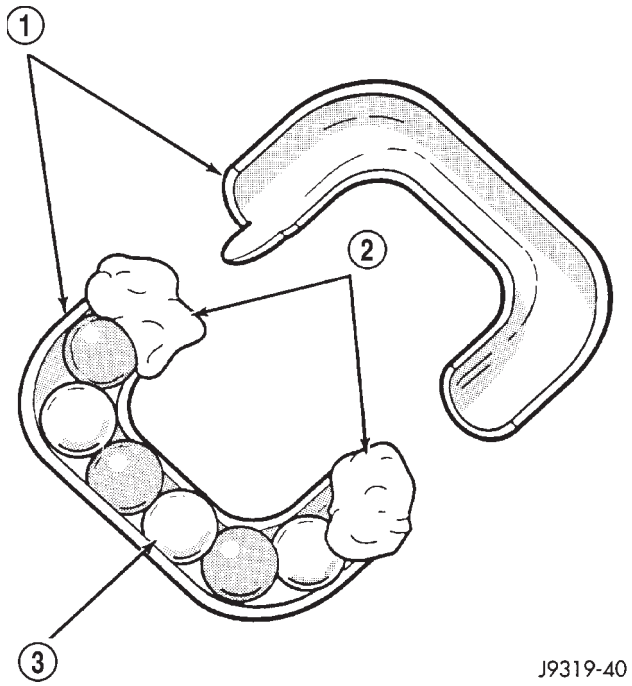

Fig. 43 Balls in the Return Guide

1 - GUIDE
2 - PETROLEUM JELLY
3 - BALLS

(9) Install the races and thrust bearing on the worm shaft and install shaft in the housing (Fig. 41).

(10) Install the stub shaft with spool valve, thrust support assembly and adjuster nut in the housing.

(11) Install the rack piston and arbor tool into the housing.

(12) Hold arbor tightly against worm shaft and turn stub shaft CLOCKWISE until rack piston is seated on worm shaft.

(13) Install pitman shaft and side cover in the housing.

(14) Install rack piston plug and tighten to 150 N·m (111 ft. lbs.).

(15) Install housing end plug.

(16) Adjust worm shaft thrust bearing preload and over-center rotating torque.

LINKAGE

TABLE OF CONTENTS

	page
LINKAGE	
DESCRIPTION	31
SPECIFICATIONS	32
SPECIAL TOOLS	32
DAMPER	
DESCRIPTION	32
OPERATION	32
REMOVAL	32
INSTALLATION	32
DRAG LINK	
DESCRIPTION	33
OPERATION	33
REMOVAL	33
INSTALLATION	33
PITMAN ARM	
DESCRIPTION	33
OPERATION	33
REMOVAL	33
INSTALLATION	33
TIE ROD END	
DESCRIPTION	34
OPERATION	34
REMOVAL	34
INSTALLATION	34

LINKAGE

DESCRIPTION

The steering linkage consists of a pitman arm, drag link, tie rod, and steering dampener (Fig. 1). An adjustment sleeve on the tie rod is used to set wheel toe position. The sleeve on the drag link is used for steering wheel centering.

CAUTION: If any steering components are replaced or serviced an alignment must be performed, to ensure the vehicle meets all alignment specifications.

CAUTION: Components attached with a nut and cotter pin must be torqued to specification. Then if the slot in the nut does not line up with the cotter pin hole, tighten nut until it is aligned. Never loosen the nut to align the cotter pin hole.

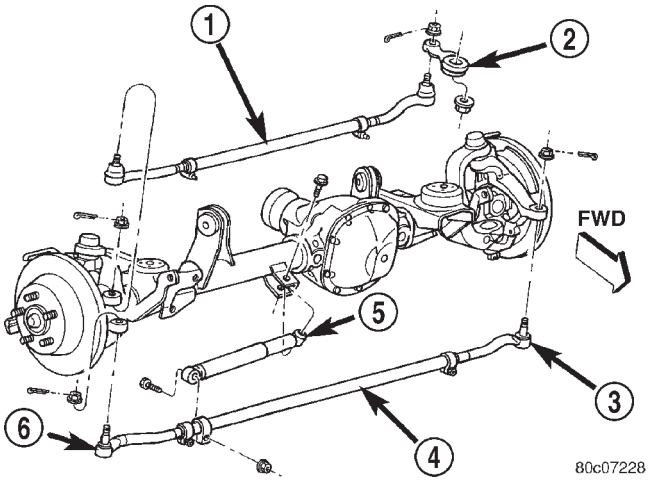

Fig. 1 Steering Linkage

1 - DRAG LINK
2 - PITMAN ARM
3 - TIE ROD END
4 - TIE ROD
5 - DAMPER
6 - TIE ROD END

SPECIFICATIONS

TORQUE CHART

TORQUE SPECIFICATIONS

DESCRIPTION	N·m	Ft. Lbs.	In. Lbs.
Pitman Arm Shaft Nut	251	185	—
Drag Link Pitman Arm Nut	88	65	—
Drag Link Knuckle Nut	47	35	—
Drag Link Clamp Nuts	41	30	—
Tie Rod Knuckle Nut	47	35	—
Tie Rod Clamp Nuts	41	30	—
Steering Damper Axle Bolt	88	65	—
Steering Damper Tie Rod Nut	41	30	—

SPECIAL TOOLS

STEERING LINKAGE

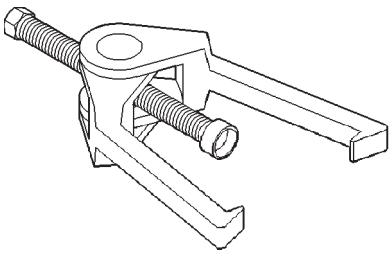

Puller C-3894–A

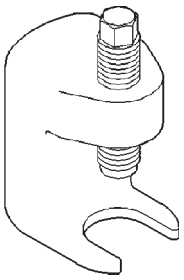

Remover Pitman C-4150A

DAMPER

DESCRIPTION

The damper is mounted to the axle housing and the tie rod end. The damper consists of steel tube shock absorber with a permanent bushed end.

OPERATION

The steering damper provides steering system damping.

REMOVAL

(1) Remove the nut from the ball stud at the tie rod.

(2) Remove the steering damper from the tie rod.

(3) Remove the steering damper nut and bolt from the axle bracket (Fig. 2).

INSTALLATION

(1) Install the steering damper to the axle bracket and tie rod.

(2) Install the steering damper bolt in the axle bracket and tighten bolt to 88 N·m (65 ft. lbs.).

(3) Install the nut at the tie rod and tighten to 41 N·m (30 ft. lbs.).

DRAG LINK (Continued)

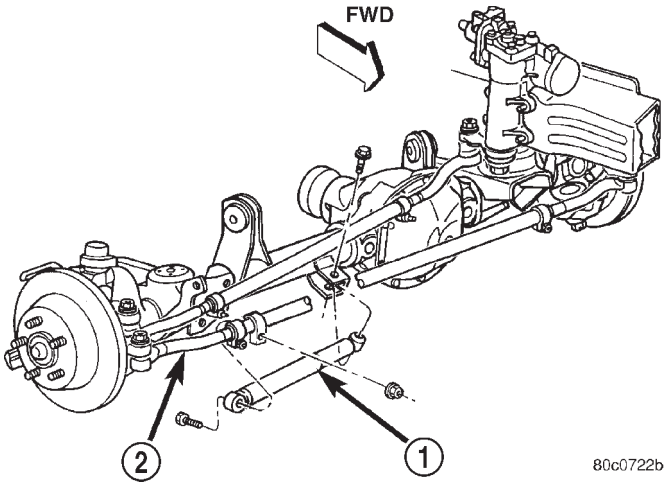

Fig. 2 Steering Damper

1 - DAMPER
2 - TIE ROD

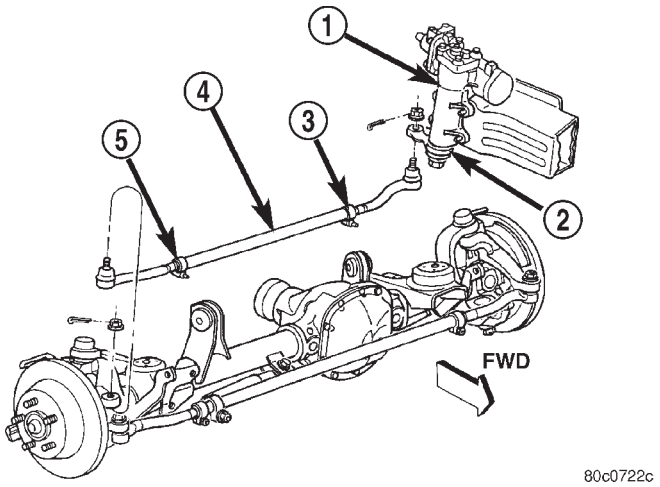

Fig. 3 Drag Link

1 - STEERING GEAR
2 - PITMAN ARM
3 - CLAMP
4 - DRAG LINK
5 - CLAMP

DRAG LINK

DESCRIPTION

The drag link and ends are comprised of two forged ends connected by a steel adjusting tube. The drag link connects the steering gear pitman arm to the steering knuckle. The larger offset end is attached to the pitman arm.

OPERATION

The sleeve is used for steering wheel centering.

REMOVAL

(1) Raise and support the vehicle.
(2) Remove right wheel and tire assembly.
(3) Remove the cotter pins and nuts at the right steering knuckle and pitman arm (Fig. 3).
(4) Remove the drag link from the steering knuckle and pitman arm Puller C-3894-A.
(5) Loosen adjustment sleeve clamp bolts and unscrew the tie rod ends from the adjustment sleeve.

INSTALLATION

(1) Screw the tie rod ends into the adjustment sleeve.
(2) Install the drag link onto the right steering knuckle and pitman arm.
(3) Tighten the nut at the steering knuckle to 47 N·m (35 ft. lbs.). Tighten the pitman nut to 88 N·m (65 ft. lbs.). Install new cotter pins.
(4) Position clamp bolts to their original position and tighten to 41 N·m (30 ft. lbs.).
(5) Install right wheel and tire assembly.
(6) Remove support and lower the vehicle.
(7) Center the steering wheel.

PITMAN ARM

DESCRIPTION

The pitman arm is attached at one end of the steering gear's sector shaft. The other end is connected to the drag link.

OPERATION

The pitman arm transfers rotary motion into side to side motion.

REMOVAL

(1) Remove the cotter pin and nut from the drag link at the pitman arm (Fig. 4).
(2) Remove the drag link ball stud from the pitman arm with a puller.
(3) Remove the nut and washer from the steering gear shaft. Mark the pitman shaft and pitman arm for installation reference. Remove the pitman arm from steering gear with Puller C-4150A.

INSTALLATION

(1) Align and install the pitman arm on steering gear shaft.
(2) Install the washer and nut on the shaft and tighten the nut to 251 N·m (185 ft. lbs.).
(3) Install drag link ball stud to pitman arm. Install nut and tighten to 88 N·m (65 ft. lbs.). Install a new cotter pin.

TIE ROD END (Continued)

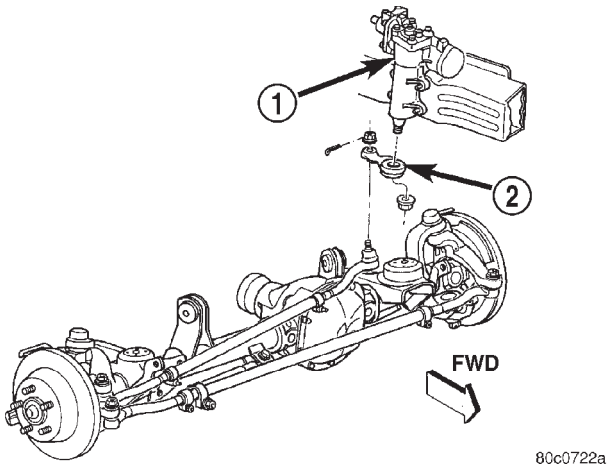

Fig. 4 Pitman Arm

1 - STEERING GEAR
2 - PITMAN ARM

TIE ROD END

DESCRIPTION

The ends are forged, with a lubed for life ball socket.

OPERATION

The tie rod ends connect the drag link to the wheel assembly. The tie rod provides toe alignment and transfers steering input from the drag link to the wheels.

REMOVAL

(1) Raise and support the vehicle.
(2) Remove wheel and tire assemblies.
(3) Remove the damper nut from the tie rod clamp (Fig. 5).
(4) Remove the damper from the tie rod.
(5) Remove the cotter pins and nuts from the tie rod ends at the steering knuckles (Fig. 5).
(6) Remove the tie rod ends from the steering knuckles with Puller C-3894-A.
(7) Loosen the adjustment sleeve clamp bolts and unscrew the tie rod ends from the sleeve.

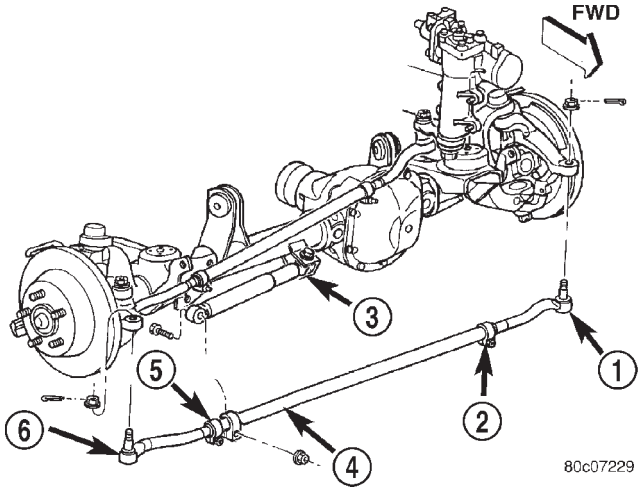

Fig. 5 Tie Rod Assembly

1 - TIE ROD END
2 - CLAMP
3 - DAMPER
4 - TIE ROD
5 - CLAMP
6 - TIE ROD END

INSTALLATION

(1) Screw the tie rod ends into the adjustment sleeve.
(2) Install the tie rod on the steering knuckles and install the nuts.
(3) Tighten the nuts to 47 N·m (35 ft. lbs.). Install new cotter pins and bend end 60°.
(4) Position the adjustment sleeve clamp bolts to their original location and tighten to 41 N·m (30 ft. lbs.).
(5) Install the damper on the tie rod and install the nut.
(6) Tighten the nut to 41 N·m (30 ft. lbs.). Install new cotter pins and bend end 60°.
(7) Install wheel and tire assemblies.
(8) Remove support and lower the vehicle.
(9) Perform toe position adjustment.

PUMP

TABLE OF CONTENTS

page

PUMP
DESCRIPTION 35
OPERATION. 35
DIAGNOSIS AND TESTING 37
PUMP LEAKAGE 37
STANDARD PROCEDURE 37
INITIAL OPERATION - 4.0L. 37
INITIAL OPERATION - 4.7L. 37
REMOVAL 38
INSTALLATION. 38
SPECIFICATIONS 39
SPECIAL TOOLS 39
FLUID COOLER
REMOVAL 40
INSTALLATION. 40
HOSES
DESCRIPTION 40
OPERATION. 40
REMOVAL 41
INSTALLATION. 41
PULLEY
REMOVAL 41
INSTALLATION. 41
RESERVOIR
REMOVAL 42
INSTALLATION. 42

PUMP

DESCRIPTION - 4.7L

Hydraulic pressure for the power steering system is provided by a belt driven power steering pump (Fig. 1). The pump shaft has a pressed-on drive pulley that is belt driven by the crankshaft pulley.

DESCRIPTION - 4.0L

Hydraulic pressure for the power steering system is provided by a belt driven power steering pump (Fig. 2). The pump shaft has a pressed-on drive pulley that is belt driven by the crankshaft pulley.

DESCRIPTION - POWER STEERING/RADIATOR COOLING FAN FLUID FILTER

There is a in-line fluid filter located between the steering gear and the power steering fluid oil cooler (Fig. 3). This filter is designed for the life of the vehicle. However, some conditions may cause the filter to reach its capacity prematurely. Because the filter has a built-in bypass function that activates when the filter becomes plugged, a plugged filter can not be detected. Because of this, the filter must be replaced whenever there is a failure of any component of the hydraulic system (i.e. steering gear, power steering pump or hydraulic fan drive). The filter should also be replaced on any vehicle that contains excessive amounts of dust or dirt in the power steering fluid.

OPERATION - 4.7L

The power steering pump is a constant flow rate and displacement, vane-type pump. The pump has internal parts that operate submerged in fluid. The flow control orifice is part of the high pressure line quick connect fitting. The pressure relief valve inside the flow control orifice and the pressure relief valve, which limits the pump pressure, are internal to the pump. The reservoir is attached to the pump body with spring clips. The power steering pump is used to drive the hydraulic engine cooling fan, which separates the flow to the fan gerotors and the power steering gear. The power steering pump is connected to the engine cooling fan by pressure and return hoses and the pump is connected to the steering gear via a return hose from the steering cooler.

NOTE: Power steering pumps have different pressure rates and are not interchangeable with other pumps.

OPERATION - 4.0L

The power steering pump is a constant flow rate and displacement, vane-type pump. The pump internal parts operate submerged in fluid. The flow control orifice is part of the high pressure line fitting. The pressure relief valve inside the flow control valve limits the pump pressure. The reservoir is attached to the pump body with spring clips. The power steering pump is connected to the steering gear by the pressure and return hoses.

NOTE: Power steering pumps have different pressure rates and are not interchangeable with other pumps.

PUMP (Continued)

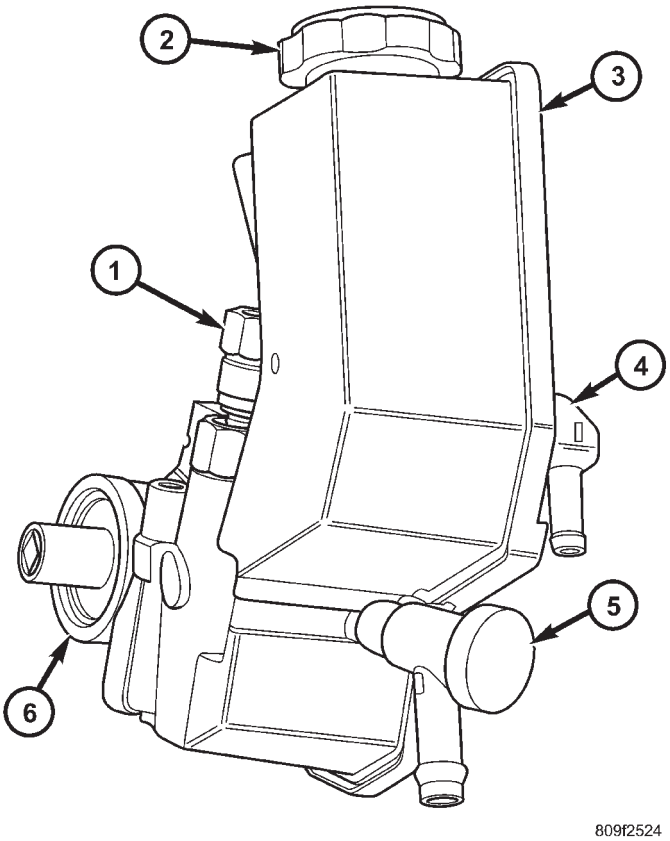

Fig. 1 4.7L POWER STEERING PUMP

1 - High-Pressure Fitting
2 - Cap
3 - Fluid Reservoir
4 - Low-Pressure Return From The Filter
5 - Low-Pressure Return From The Hydraulic Fan Drive
6 - Pump Body

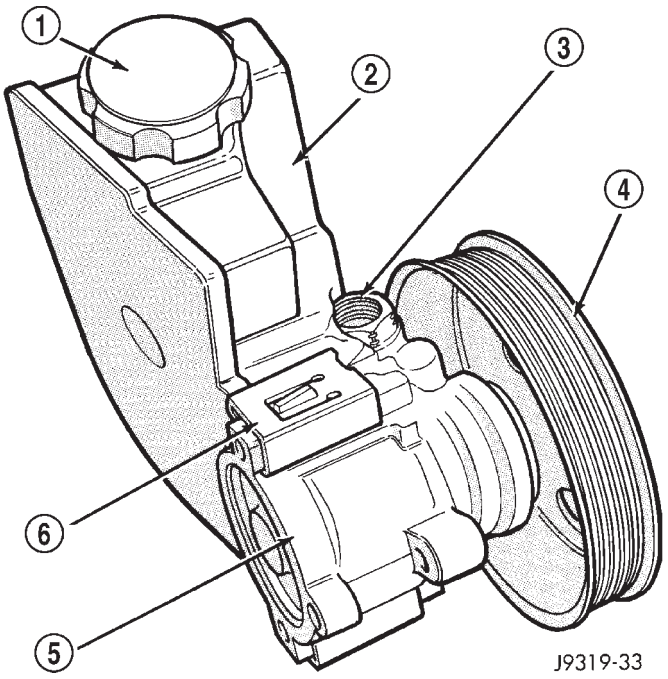

Fig. 2 Pump With Integral Reservoir

1 - CAP
2 - FLUID RESERVOIR (TYPICAL)
3 - HIGH-PRESSURE FITTING
4 - DRIVE PULLEY
5 - PUMP BODY
6 - RESERVOIR CLIP

OPERATION - POWER STEERING/RADIATOR COOLING FAN FLUID FILTER

The filter is designed to last the life of the vehicle. However, some conditions can cause the filter to become plugged prematurely thus causing the fluid to by-pass the filter element because of the built-in by-pass in the filter housing. Because of the built-in by-pass a plugged filter can not be detected, therefore, the filter must be replaced if any failure within the hydraulic system occurs. The filter should also be replaced it the power steering fluid becomes contaminated with excessive dust or dirt.

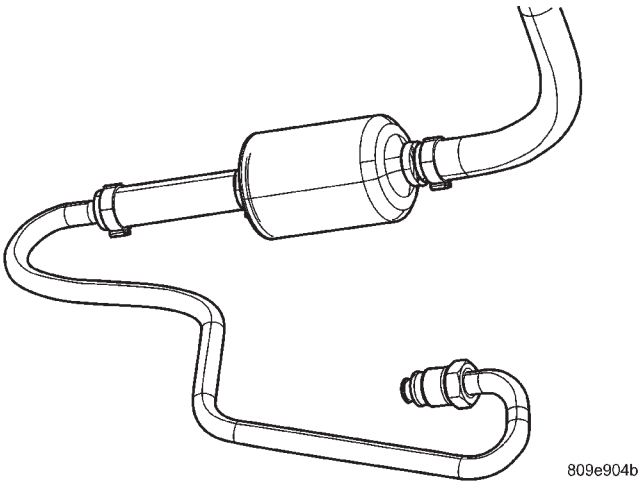

Fig. 3 FLUID FILTER

PUMP (Continued)

DIAGNOSIS AND TESTING - PUMP LEAKAGE

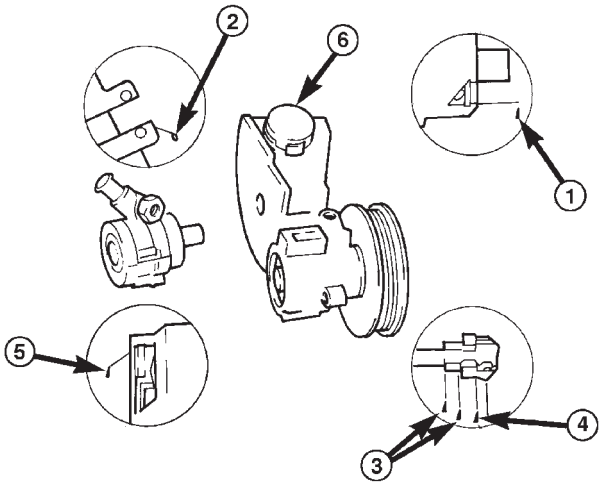

1. BUSHING (BEARING) WORN, SEAL WORN. REPLACE PUMP.
2. REPLACE RESERVOIR O-RING SEAL.
3. TORQUE HOSE FITTING NUT TO SPECIFICATIONS. IF LEAKAGE PERSISTS, REPLACE O-RING SEAL.
4. TORQUE FITTING TO SPECIFICATIONS. IF LEAKAGE PERSISTS, REPLACE O-RING SEAL.
5. REPLACE PUMP.
6. CHECK OIL LEVEL: IF LEAKAGE PERSISTS WITH THE LEVEL CORRECT AND CAP TIGHT, REPLACE THE CAP.

80a1c3c3

Power Steering Pump

STANDARD PROCEDURES - INITIAL OPERATION - 4.0L

WARNING: THE FLUID LEVEL SHOULD BE CHECKED WITH ENGINE OFF TO PREVENT INJURY FROM MOVING COMPONENTS.

CAUTION: Use MOPAR Power Steering Fluid or equivalent. Do not use automatic transmission fluid and do not overfill.

Wipe filler cap clean, then check the fluid level. The dipstick should indicate **COLD** when the fluid is at normal ambient temperature.

(1) Fill the pump fluid reservoir to the proper level and let the fluid settle for at least two minutes.

(2) Start the engine and let run for a few seconds then turn engine off.

(3) Add fluid if necessary. Repeat the above procedure until the fluid level remains constant after running the engine.

(4) Raise the front wheels off the ground.

(5) Slowly turn the steering wheel right and left, lightly contacting the wheel stops at least 20 times.

(6) Check the fluid level add if necessary.

(7) Lower the vehicle, start the engine and turn the steering wheel slowly from lock to lock.

(8) Stop the engine and check the fluid level and refill as required.

(9) If the fluid is extremely foamy or milky looking, allow the vehicle to stand a few minutes and repeat the procedure.

CAUTION: Do not run a vehicle with foamy fluid for an extended period. This may cause pump damage.

STANDARD PROCEDURES - INITIAL OPERATION - 4.7L

WARNING: THE FLUID LEVEL SHOULD BE CHECKED WITH ENGINE OFF TO PREVENT INJURY FROM MOVING COMPONENTS.

CAUTION: Use MOPAR Power Steering Fluid or equivalent. Do not use automatic transmission fluid and do not overfill.

Wipe filler cap clean, then check the fluid level. The dipstick should indicate **COLD** when the fluid is at normal ambient temperature.

(1) Fill the pump fluid reservoir to the proper level and let the fluid settle for at least two minutes.

(2) Start the engine and let run for a few seconds then turn engine off.

(3) Add fluid if necessary. Repeat the above procedure until the fluid level remains constant after running the engine.

(4) Raise the front wheels off the ground.

(5) Slowly turn the steering wheel right and left, lightly contacting the wheel stops at least 20 times.

(6) Check the fluid level add if necessary.

(7) Lower the vehicle, start the engine, and use the DRB III to activate the hydraulic fan on full fan operation.

(8) Turn the steering wheel slowly from lock to lock.

(9) Stop the engine, check the fluid level and refill as required and repeat the process

(10) Check the fluid level add if necessary.

CAUTION: Do not run a vehicle with foamy fluid for an extended period. This may cause pump damage.

(11) If the fluid is extremely foamy or milky looking, allow the vehicle to stand a few minutes and repeat the procedure.

(12) While the vehicle is in park, use the DRB III to activate the hydraulic fan to full fan operation and briefly rev the engine up to 3000 rpm to fully engage the hydraulic fan.

(13) Check the fluid level add if necessary.

PUMP (Continued)

REMOVAL - 4.0L ENGINE

(1) Remove serpentine drive belt,(Refer to 7 - COOLING/ACCESSORY DRIVE/DRIVE BELTS - REMOVAL).

(2) Remove pressure and return hoses from pump and drain the pump.

(3) Loosen the pump bracket bolt at the engine block.

(4) Remove 3 pump mounting bolts (Fig. 4) through pulley access holes.

(5) Tilt pump downward and remove from engine.

(6) Remove pulley from pump.

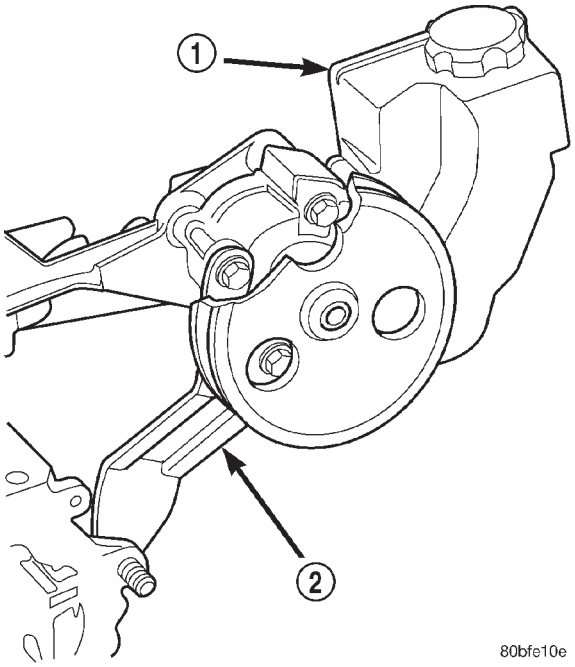

Fig. 4 PUMP MOUNTING – 4.0L

1 - PUMP ASSEMBLY
2 - PUMP BRACKET

REMOVAL - 4.7L ENGINE

(1) Remove the serpentine drive belt,(Refer to 7 - COOLING/ACCESSORY DRIVE/DRIVE BELTS - REMOVAL).

(2) Remove the pressure and return hoses from pump and drain pump.

(3) Remove 3 pump mounting bolts through pulley access holes (Fig. 5).

(4) Remove the pump from the vehicle.

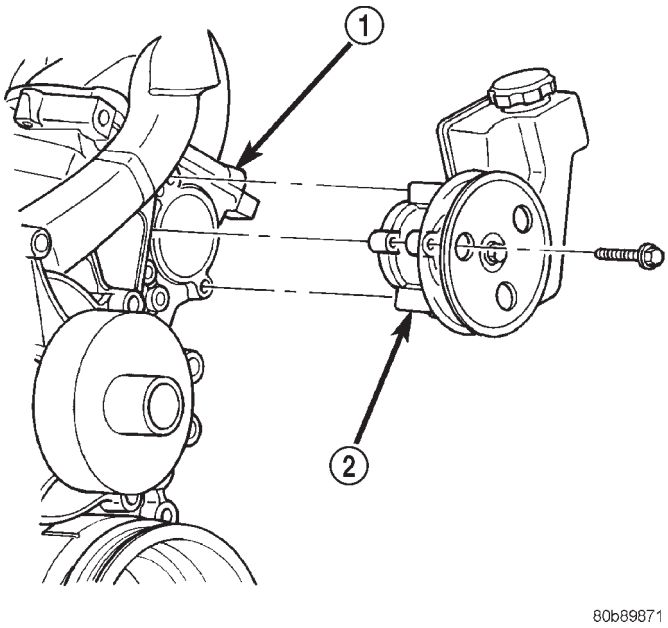

Fig. 5 Pump Mounting

1 - LEFT CYLINDER HEAD
2 - PUMP

INSTALLATION - 4.0L ENGINE

(1) Install pulley on pump.

(2) Install pump on the engine mounting bracket.

(3) Install 3 pump mounting bolts and tighten to 27 N·m (20 ft. lbs.).

(4) Tighten pump bracket bolt to 57 N·m (42 ft. lbs.).

(5) Install the pressure line on the pump and tighten to 28 N·m (21 ft. lbs.).

(6) Install the return hoses on pump.

(7) Install the drive belt,(Refer to 7 - COOLING/ACCESSORY DRIVE/DRIVE BELTS - INSTALLATION).

(8) Add power steering fluid,(Refer to 19 - STEERING/PUMP - STANDARD PROCEDURE).

INSTALLATION - 4.7L ENGINE

(1) Position the pump on the left cylinder head and install bolts through pulley access holes. Tighten bolts to 28 N·m (21 ft. lbs.).

(2) Install the pressure and return hoses to pump.

(3) Install serpentine drive belt,(Refer to 7 - COOLING/ACCESSORY DRIVE/DRIVE BELTS - INSTALLATION).

(4) Add power steering fluid,(Refer to 19 - STEERING/PUMP - STANDARD PROCEDURE).

SPECIFICATIONS

TORQUE CHART

TORQUE SPECIFICATIONS

DESCRIPTION	N·m	Ft. Lbs.	In. Lbs.
Power Steering Pump Bracket Bolt-4.0L	57	42	—
Power Steering Pump Pump Bolts-4.0L	28	21	250
Power Steering Pump Pump Bolts-4.7L	28	21	250
Power Steering Pump Flow Control Valve	75	55	—
Power Steering Pump Pressure Line 4.0L	20-38	14-28	—
Power Steering Pump Pressure Line 4.7L	47	35	416
Power Steering Pump Return Line 4.0L & 4.7L	20-38	14-28	—

SPECIAL TOOLS

POWER STEERING PUMP

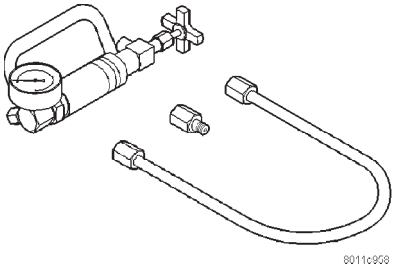

Analyzer Set, Power Steering Flow/Pressure 6815

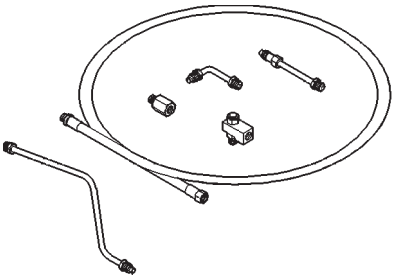

Adapters, Power Steering Flow/Pressure Tester 6893

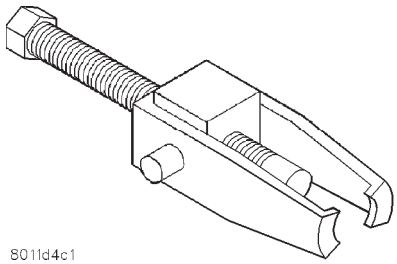

Puller C-4333

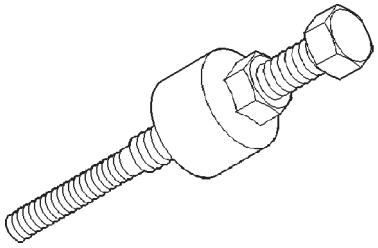

Installer, Power Steering Pulley C-4063B

FLUID COOLER

REMOVAL

(1) Drain the power steering fluid out of the reservoir.

(2) Remove the air box,(Refer to 9 - ENGINE/AIR INTAKE SYSTEM/AIR CLEANER HOUSING - REMOVAL).

(3) Remove the high pressure power steering line from the steering gear.

(4) Disconnect the low pressure return line from the power steering gear.

(5) Remove the front fascia grille,(Refer to 13 - FRAMES & BUMPERS/BUMPERS/FRONT FASCIA - REMOVAL).

(6) Remove the power steering cooler from the vehicle (Fig. 6).

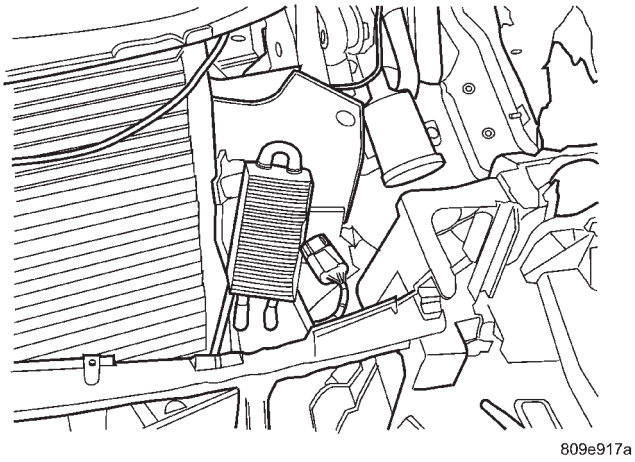

Fig. 6 COOLER REMOVAL

INSTALLATION

(1) Install the power steering cooler to the vehicle (Fig. 7).

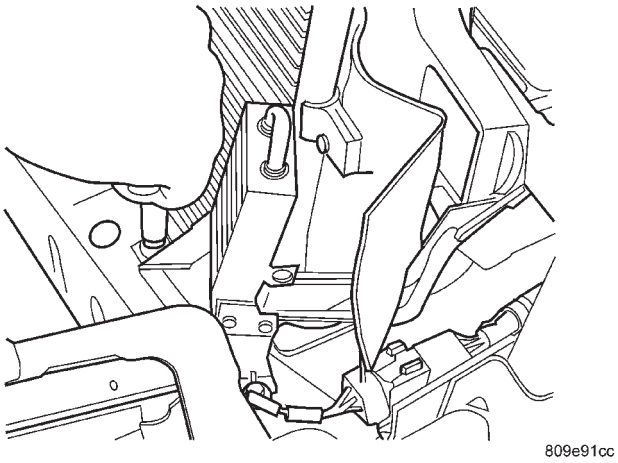

Fig. 7 COOLER INSTALL

(2) Install the front fascia grille,(Refer to 13 - FRAMES & BUMPERS/BUMPERS/FRONT FASCIA - INSTALLATION).

(3) Reconnect the low pressure return line to the power steering gear.

(4) Install the high pressure power steering line to the steering gear.

(5) Install the air box,(Refer to 9 - ENGINE/AIR INTAKE SYSTEM/AIR CLEANER HOUSING - INSTALLATION).

(6) Refill the power steering fluid and bleed the system,(Refer to 19 - STEERING/PUMP - STANDARD PROCEDURE).

HOSES

DESCRIPTION - PRESSURE LINE

The hose consists of two metal ends and rubber center section that contains a tuning cable. The pump end uses a quick connect fitting. Lubircation must be used on the quick connect nut and o-ring when installing.

DESCRIPTION - RETURN LINE

Power steering return line is a hose which is clamped at the pump and the gear.

OPERATION - PRESSURE LINE

Power steering pressure line, is used to transfer high pressure power steering fluid, from the power steering pump to the power steering gear on the 4.0L. The 4.7L power steering pressure line, is used to transfer high pressure power steering fluid, from the power steering pump to the engine cooling fan and the steering gear, the line also uses an in-line fluid filter to filter contaminates (Fig. 8).

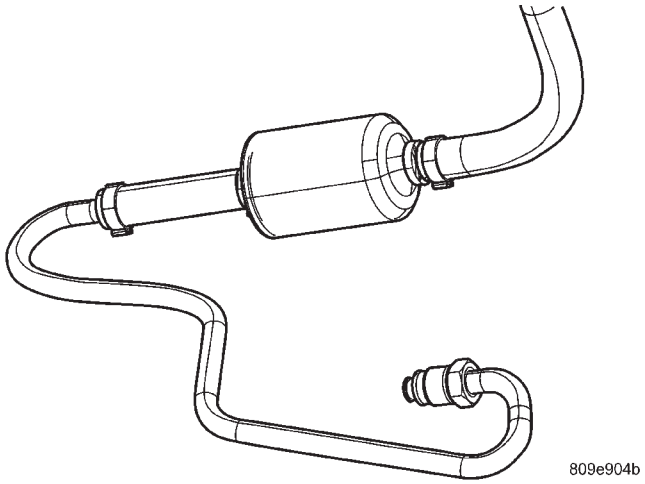

Fig. 8 FLUID FILTER

HOSES (Continued)

OPERATION - RETURN LINE

Power steering return line, is used to transfer low pressure power steering fluid, from the power steering gear to the power steering pump.

REMOVAL

(1) Drain the power steering fluid from the reservoir.

(2) Remove the air box,(Refer to 9 - ENGINE/AIR INTAKE SYSTEM/AIR CLEANER HOUSING - REMOVAL).

(3) Disconnect the power steering pressure hose from the power steering pump and then the power steering gear (Fig. 9).

(4) Disconnect the power steering return hose from the power steering cooler and the reservoir.

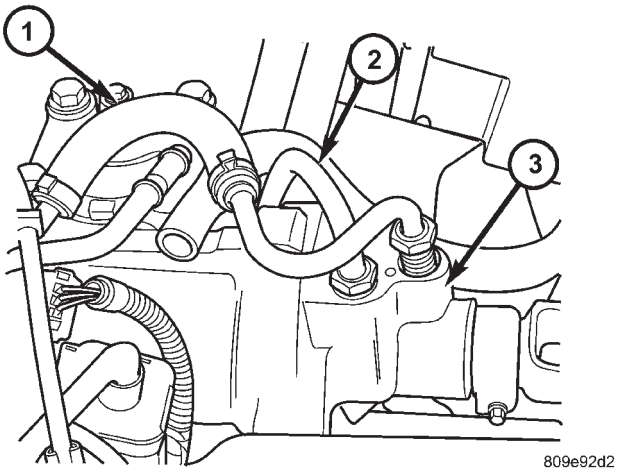

Fig. 9 POWER STEERING HOSES

1 - RETURN HOSE
2 - HIGH PRESSURE HOSE
3 - STEERING GEAR

(5) Remove the hoses from the vehicle.

INSTALLATION

(1) Install the hoses to the vehicle.

(2) Reconnect the power steering return hose to the power steering cooler and the reservoir.

(3) Reconnect the power steering pressure hose to the power steering pump and then the power steering gear.

(4) Install the air box,(Refer to 9 - ENGINE/AIR INTAKE SYSTEM/AIR CLEANER HOUSING - INSTALLATION).

(5) Refill the power steering fluid and bleed the system,(Refer to 19 - STEERING/PUMP - STANDARD PROCEDURE).

PULLEY

REMOVAL

CAUTION: On vehicles equipped with the 4.0L or 4.7L, Do not reuse the old power steering pump pulley it is not intended for reuse. A new pulley must be installed if removed.

(1) Remove pump assembly.

(2) Remove pulley from pump with Puller C-4333 or equivalent puller (Fig. 10).

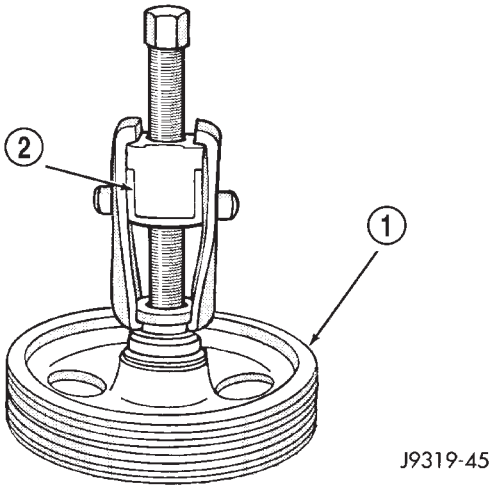

Fig. 10 Pulley Removal

1 - POWER STEERING PUMP DRIVE PULLEY
2 - SPECIAL TOOL C-4333

INSTALLATION

NOTE: The pulley is marked front for installation.

CAUTION: On vehicles equipped with the 4.0L or 4.7L, Do not reuse the old power steering pump pulley it is not intended for reuse. A new pulley must be installed if removed.

(1) Replace pulley if bent, cracked, or loose.

(2) Install pulley on pump with Installer C-4063-B or equivalent installer (Fig. 11). The front edge of the pulley hub must be flush with the end of the shaft. Ensure the tool and pulley are aligned with the pump shaft.

(3) Install pump assembly.

(4) With Serpentine Belt, run engine until warm (5 min.) and note any belt chirp. If chirp exists, move pulley outward approximately 0.5 mm (0.020 in.). If noise increases, press on 1.0 mm (0.040 in.). **Be careful that pulley does not contact mounting bolts.**

RESERVOIR (Continued)

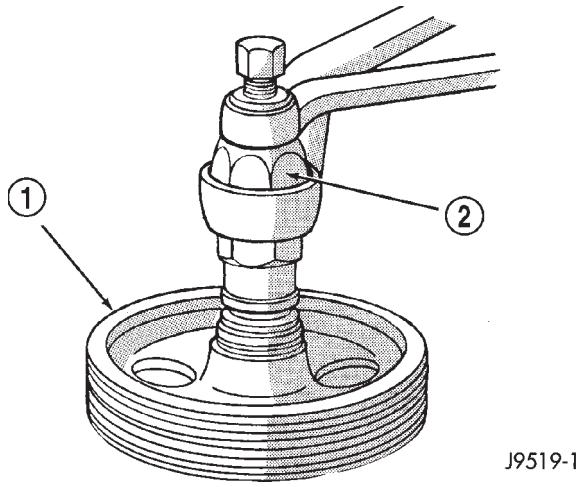

Fig. 11 Pulley Installation

1 - POWER STEERING PUMP DRIVE PULLEY
2 - SPECIAL TOOL C-4063–B

RESERVOIR

REMOVAL

(1) Remove power steering pump.
(2) Clean exterior of pump.
(3) Clamp the pump body in a soft jaw vice.

NOTE: Use new retaining clips for installation.

(4) Pry up tab and slide the retaining clips off (Fig. 12).
(5) Remove fluid reservoir from pump body. Remove and discard O-ring seal.

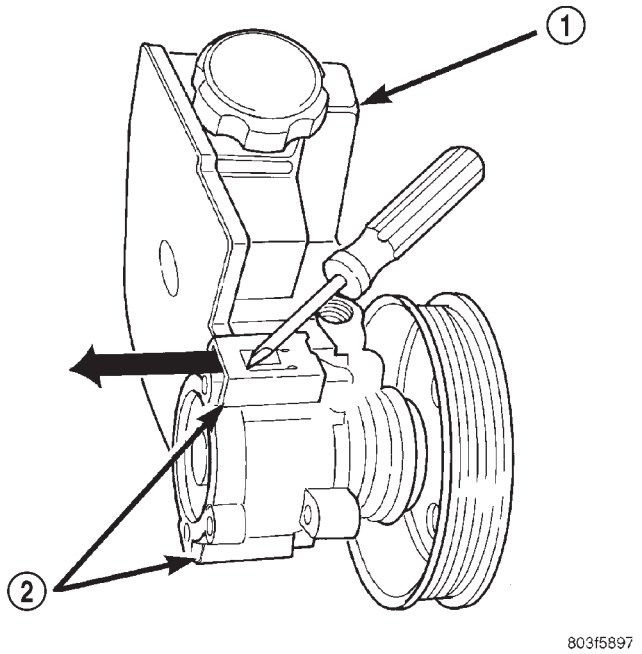

Fig. 12 Pump Reservoir Clips

1 - RESERVOIR
2 - RETAINING CLIPS

INSTALLATION

(1) Lubricate new O-ring Seal with Mopar Power Steering Fluid or equivalent.
(2) Install O-ring seal in housing.
(3) Install reservoir onto housing.
(4) Slide and tap in **new** reservoir retainer clips until tab locks to housing.
(5) Install power steering pump.
(6) Add power steering fluid,(Refer to 19 - STEERING/PUMP - STANDARD PROCEDURE).

TRANSMISSION AND TRANSFER CASE

TABLE OF CONTENTS

	page
TRANSFER CASE - NV242	1
TRANSFER CASE - NV247	38
AUTOMATIC TRANSMISSION - 42RE	64
AUTOMATIC TRANSMISSION - 545RFE	241

TRANSFER CASE - NV242

TABLE OF CONTENTS

	page
TRANSFER CASE - NV242	
DESCRIPTION	1
OPERATION	2
DIAGNOSIS AND TESTING	2
TRANSFER CASE - NV242	2
REMOVAL	3
DISASSEMBLY	3
CLEANING	13
INSPECTION	14
ASSEMBLY	18
INSTALLATION	31
SPECIFICATIONS	32
SPECIAL TOOLS	33
FRONT OUTPUT SHAFT SEAL	
REMOVAL	35
INSTALLATION	35
REAR RETAINER BUSHING AND SEAL - NV242HD	
REMOVAL	35
INSTALLATION	36
SHIFT CABLE	
REMOVAL	36
INSTALLATION	36

TRANSFER CASE - NV242

DESCRIPTION

The NV242 is a full transfer case (Fig. 1). It provides full time 2-wheel, or 4-wheel drive operation.

A differential in the transfer case is used to control torque transfer to the front and rear axles. A low range gear provides increased low speed torque capability for off road operation. The low range provides a 2.72:1 reduction ratio.

The geartrain is mounted in two aluminum case halves attached with bolts. The mainshaft front and rear bearings are mounted in aluminum retainer housings bolted to the case halves.

TRANSFER CASE IDENTIFICATION

Two versions of the NV242 are used in the WJ vehicles, NV242LD and NV242HD. The two transfer cases can be distinguished from one another by the rear output shaft retainer. The NV242LD uses a rubber boot to cover the rear output shaft, while the NV242HD uses a cast aluminum housing. Other than this difference, the two transfer cases are serviced the same.

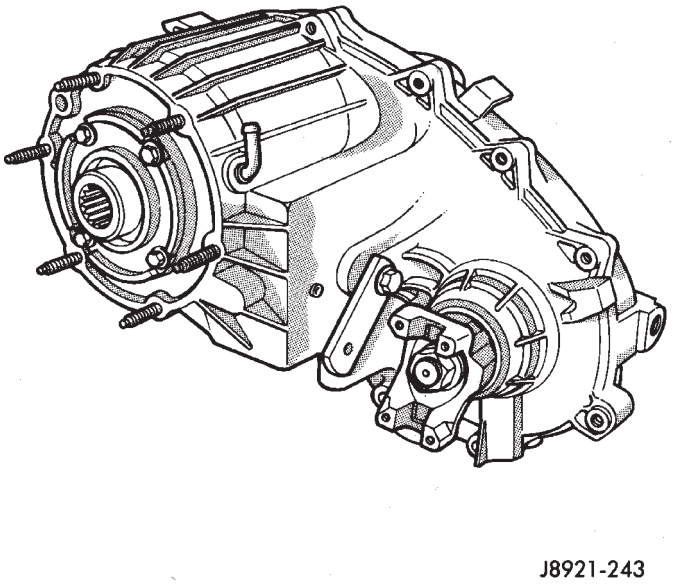

Fig. 1 NV242 Transfer Case

TRANSFER CASE - NV242 (Continued)

A circular ID tag is attached to the rear case of each transfer case (Fig. 2). The ID tag provides the transfer case model number, assembly number, serial number, and low range ratio.

The transfer case serial number also represents the date of build.

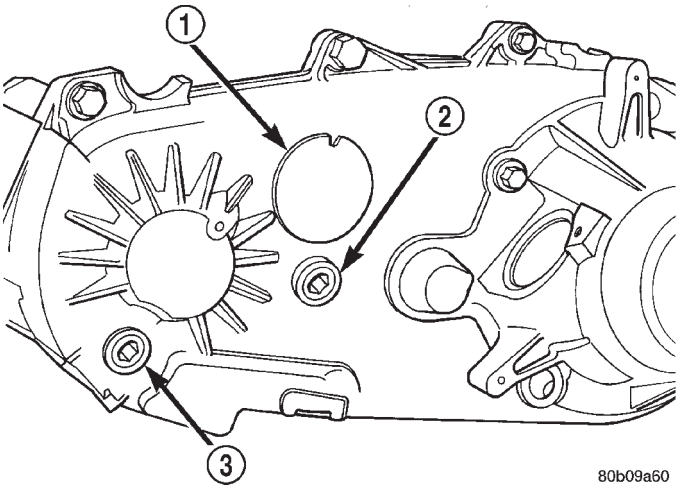

Fig. 2 Fill/Drain Plug And I.D. Tag Locations

1 - I.D. TAG
2 - FILL PLUG
3 - DRAIN PLUG

SHIFT MECHANISM

Operating ranges are selected with a lever in the floor mounted shifter assembly. The shift lever is connected to the transfer case range lever by an adjustable cable. A straight line shift pattern is used. Range positions are marked on the shifter bezel.

OPERATION

The input gear is splined to the transmission output shaft. It drives the mainshaft through the planetary gear and range hub. The front output shaft is operated by a drive chain that connects the shaft to a drive sprocket on the mainshaft. The drive sprocket is engaged/disengaged by the mode fork, which operates the mode sleeve and hub. The sleeve and hub are not equipped with a synchro mechanism for shifting.

OPERATING RANGES

NV242 operating ranges are 2WD (2-wheel drive), 4x4 part-time, 4x4 full time, and 4 Lo.

The 2WD and 4x4 full time ranges can be used at any time and on any road surface.

The 4x4 part-time and 4 Lo ranges are for off road use only. The only time these ranges can be used on hard surface roads, is when the surface is covered with snow and ice.

DIAGNOSIS AND TESTING - TRANSFER CASE - NV242

DIAGNOSIS CHART

CONDITION	POSSIBLE CAUSE	CORRECTION
Transfer case difficult to shift or will not shift into desired range.	1) Transfer case shift linkage binding.	1) Repair or replace linkage as necessary.
	2) Insufficient or incorrect lubricant.	2) Drain and refill transfer case with the correct type and quantity of lubricant.
	3) Internal transfer case components binding, worn, or damaged.	3) Repair or replace components as necessary.
Transfer case noisy in all drive modes.	1) Insufficient or incorrect lubricant.	1) Drain and refill transfer case with the correct type and quantity of lubricant.
Lubricant leaking from transfer case seals or vent.	1) Transfer case overfilled.	1) Drain lubricant to the correct level.
	2) Transfer case vent closed or restricted.	2) Clean or replace vent as necessary.
	3) Transfer case seals damaged or installed incorrectly.	3) Replace suspect seal.
Transfer case will not shift through 4X4 part time range (light remains on)	1) Incomplete shift due to drivetrain torque load.	1) Momentarily release the accelerator pedal to complete the shift.
	2) Incorrect tire pressure.	2) Correct tire pressure as necessary.
	3) Excessive Tire wear.	3) Correct tire condition as necessary.
	4) Excessive vehicle loading.	4) Correct as necessary.

TRANSFER CASE - NV242 (Continued)

REMOVAL

(1) Shift transfer case into NEUTRAL.
(2) Raise vehicle.
(3) Remove transfer case drain plug and drain transfer case lubricant.
(4) Mark front and rear propeller shaft yokes for alignment reference.
(5) Support transmission with jack stand.
(6) Remove rear crossmember and skid plate, if equipped (Fig. 3).

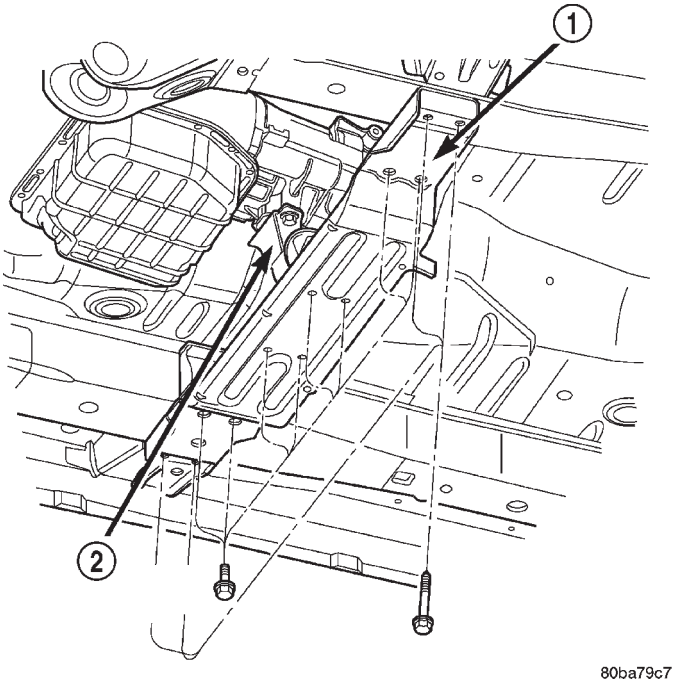

Fig. 3 Crossmember Removal

1 - CROSSMEMBER
2 - REAR TRANSMISSION MOUNT

(7) Disconnect front/rear propeller shafts at transfer case. (Refer to 3 - DIFFERENTIAL & DRIVELINE/PROPELLER SHAFT/PROPELLER SHAFT - REMOVAL)
(8) Disconnect transfer case cable from range lever.
(9) Disconnect transfer case vent hose (Fig. 4) and indicator switch harness, if necessary.
(10) Support transfer case with transmission jack.
(11) Secure transfer case to jack with chains.
(12) Remove nuts attaching transfer case to transmission.
(13) Pull transfer case and jack rearward to disengage transfer case.
(14) Remove transfer case from under vehicle.

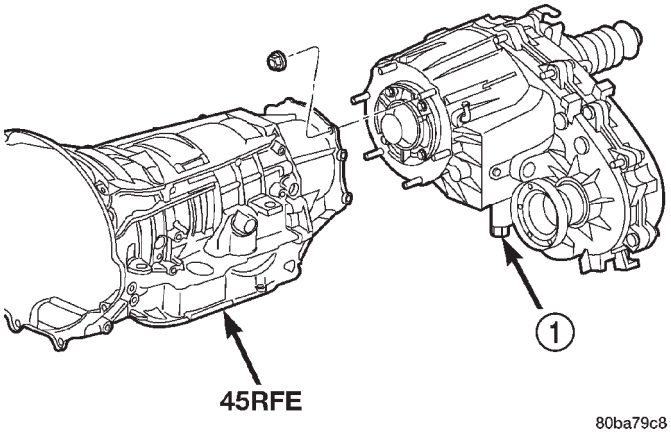

Fig. 4 Transfer Case Mounting

1 - NV242 TRANSFER CASE

DISASSEMBLY

REAR RETAINER - NV242LD

(1) Remove output shaft boot. Spread band clamp that secures boot on slinger with a suitable awl. Then slide boot off shaft (Fig. 5).

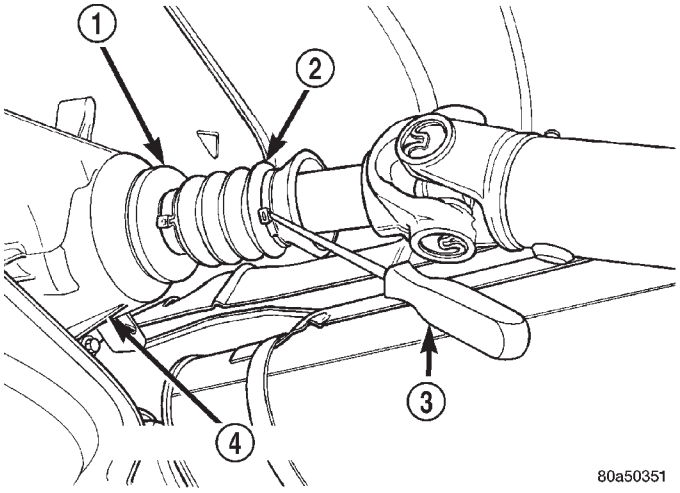

Fig. 5 Output Boot - Typical

1 - SLINGER
2 - BOOT
3 - AWL
4 - TRANSFER CASE

TRANSFER CASE - NV242 (Continued)

(2) Using puller MD-998056-A, remove rear slinger (Fig. 6).

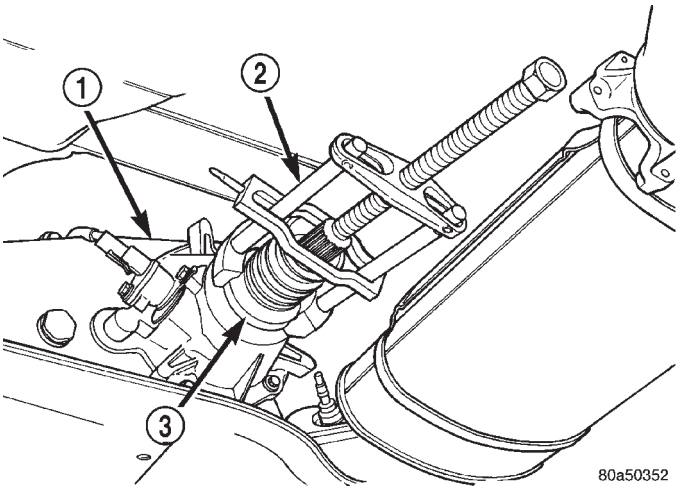

Fig. 6 Rear Slinger Removal

1 - TRANSFER CASE
2 - SPECIAL TOOL MD998056-A
3 - SLINGER

(3) Remove rear seal from retainer (Fig. 7). Use pry tool, or collapse seal with punch to remove it.

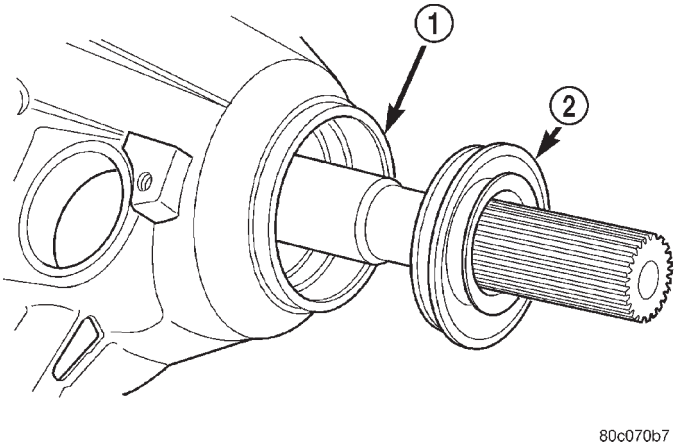

Fig. 7 Rear Seal Removal

1 - REAR RETAINER
2 - OUTPUT SHAFT SEAL

(4) Remove rear output bearing I.D. retaining ring (Fig. 8).

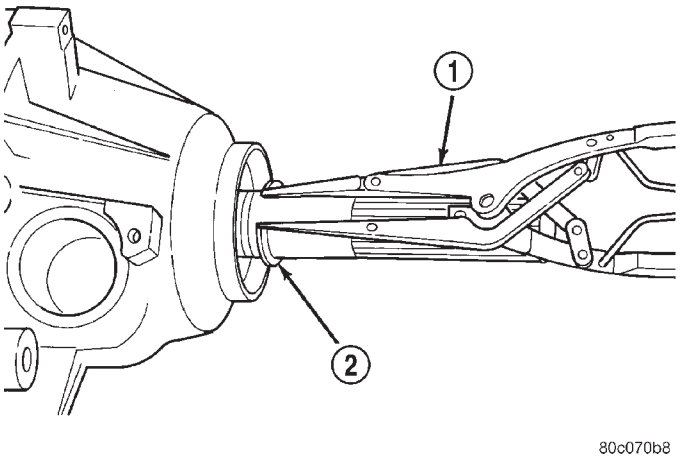

Fig. 8 Rear Bearing I.D. Retaining Ring Removal

1 - SNAP-RING PLIERS
2 - REAR BEARING I.D. RETAINING RING

(5) Remove rear retainer bolts.

(6) Remove rear retainer. Tap retainer with mallet and pry upward to break sealer bead. Then slide retainer off case and output shaft (Fig. 9).

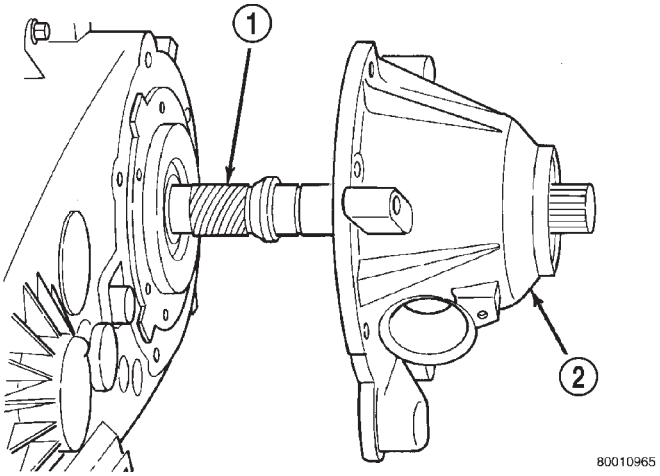

Fig. 9 Remove Rear Retainer

1 - MAINSHAFT
2 - REAR RETAINER

TRANSFER CASE - NV242 (Continued)

REAR RETAINER - NV242HD

(1) Remove extension housing bolts.

(2) Tap extension housing with plastic or rawhide mallet to loosen sealer (Fig. 10).

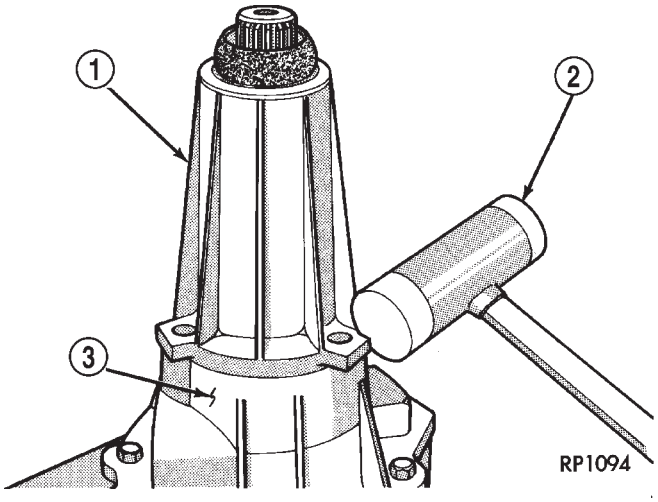

Fig. 10 Remove Extension Housing

1 - EXTENSION HOUSING
2 - PLASTIC HAMMER
3 - REAR RETAINER

(3) Separate extension housing from rear retainer.

(4) Remove rear bearing snap-ring (Fig. 11).

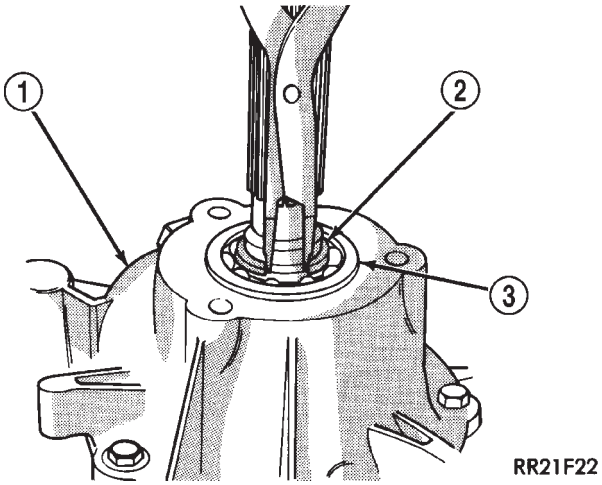

Fig. 11 Remove the Output Bearing Snap-ring

1 - REAR RETAINER
2 - SNAP-RING
3 - REAR BEARING

(5) Remove bolts holding rear retainer to rear case half.

(6) Loosen rear retainer with pry tool to break sealer bead. Pry only against retainer boss as shown (Fig. 12).

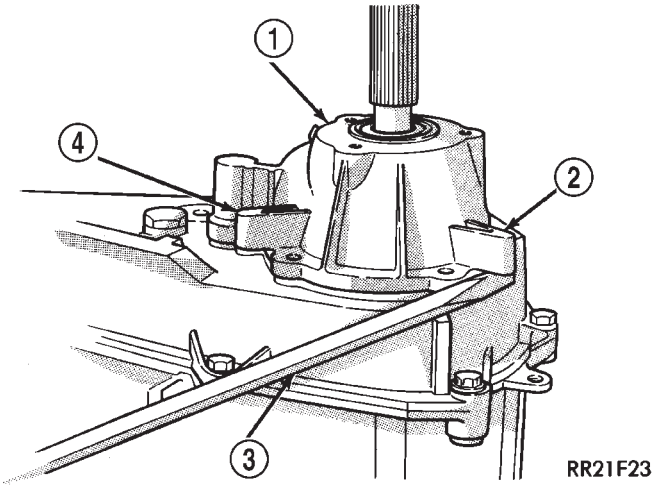

Fig. 12 Loosening Rear Retainer

1 - REAR RETAINER
2 - TAB (2)
3 - SCREWDRIVER
4 - TAB

(7) Slide retainer off case and output shaft (Fig. 13).

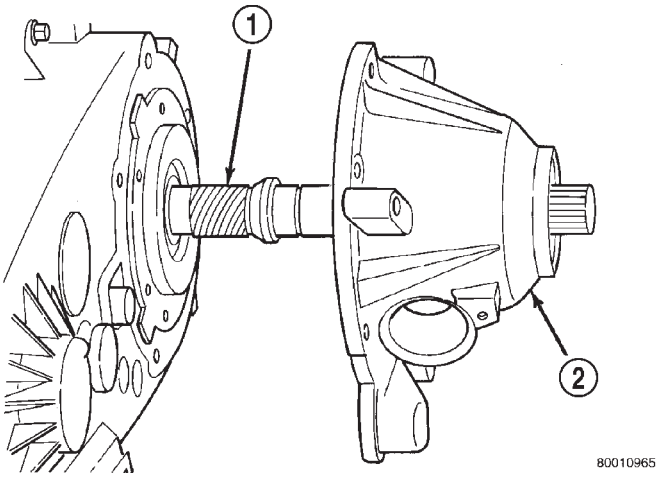

Fig. 13 Remove Rear Retainer

1 - MAINSHAFT
2 - REAR RETAINER

TRANSFER CASE - NV242 (Continued)

OIL PUMP AND REAR CASE HALF

(1) Remove rear bearing O.D. retaining ring with snap ring pliers. Then tilt pump and slide it off output shaft (Fig. 14)

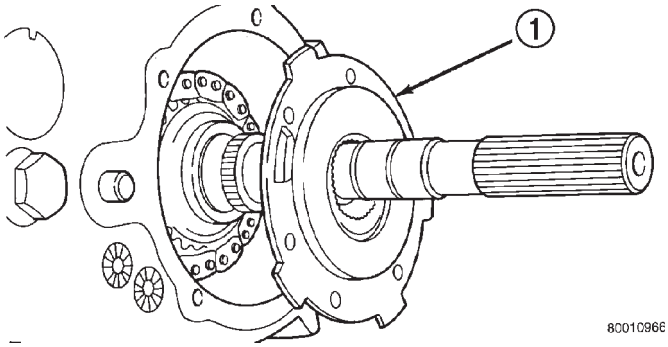

Fig. 14 Oil Pump Removal

1 - OIL PUMP

(2) Remove pickup tube O-ring from pump (Fig. 15) but do not disassemble pump; it is not a repairable part.

(3) Remove seal from oil pump with pry tool.

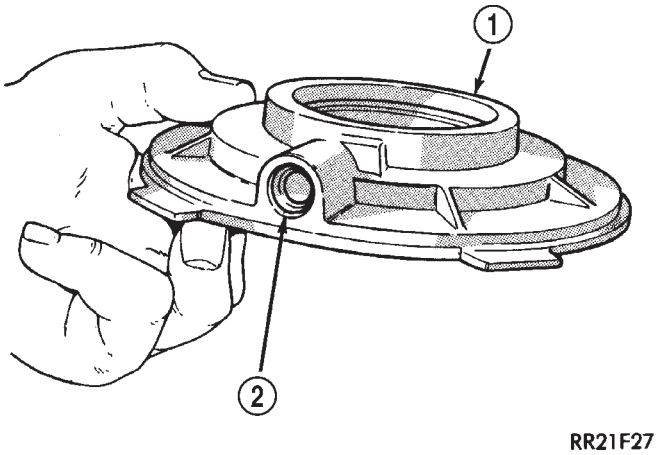

Fig. 15 Pickup Tube O-Ring Location

1 - OIL PUMP
2 - O-RING

(4) Remove bolts attaching rear case to front case (Fig. 16). Note position of the two black finish bolts at each end of the case. These bolts go through the case dowels and require a washer under the bolt head.

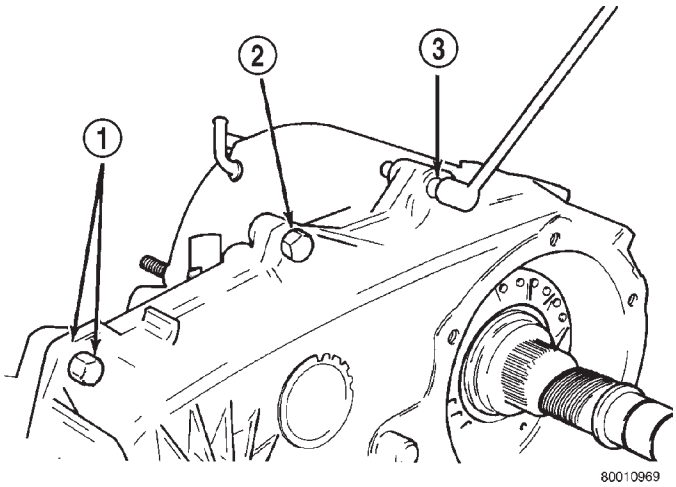

Fig. 16 Spline And Dowel Bolt Locations

1 - DOWEL BOLT AND WASHER (2)
2 - CASE BOLT (5)
3 - SPLINE HEAD BOLT (1)

(5) Remove rear case from front case (Fig. 17). Insert screwdrivers into slots cast into each end of case. Then pry upward to break sealer bead and remove rear case.

CAUTION: Do not pry on the sealing surface of either case half as the surfaces will become damaged.

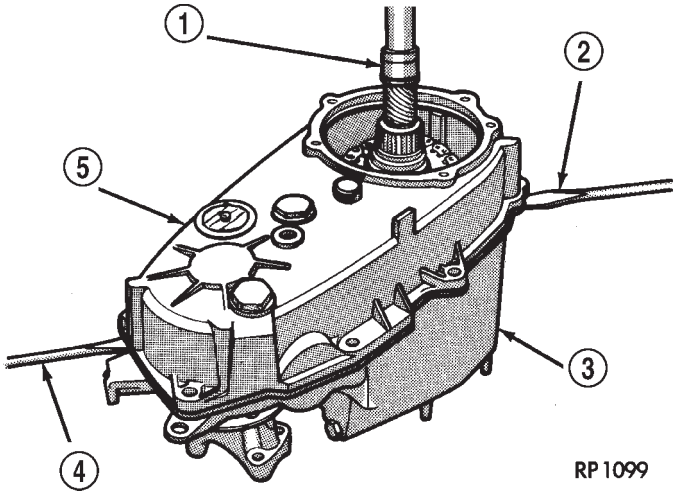

Fig. 17 Loosening/Removing Rear case

1 - MAINSHAFT
2 - SCREWDRIVER
3 - FRONT CASE
4 - SCREWDRIVER
5 - REAR CASE

TRANSFER CASE - NV242 (Continued)

(6) Remove oil pickup tube and screen from rear case (Fig. 18).

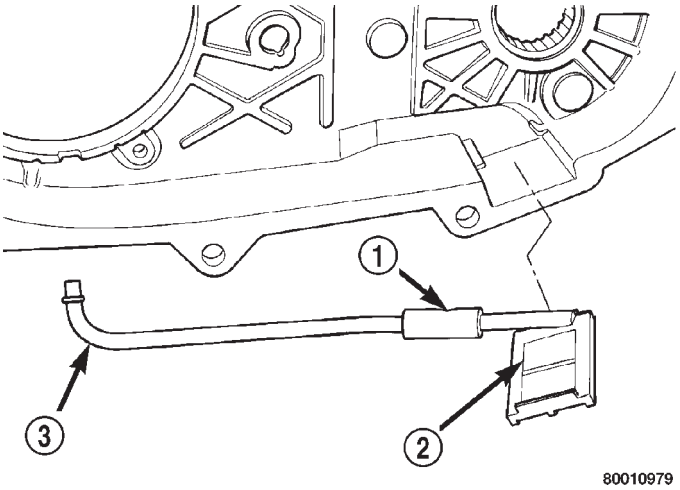

Fig. 18 Oil Pickup Screen, Hose And Tube Removal

1 - CONNECTING HOSE
2 - PICKUP SCREEN
3 - PICKUP TUBE

YOKE AND RANGE LEVER

(1) Remove front yoke nut:

(a) Move range lever to 4L position.

(b) Remove nut with socket and impact wrench (Fig. 19).

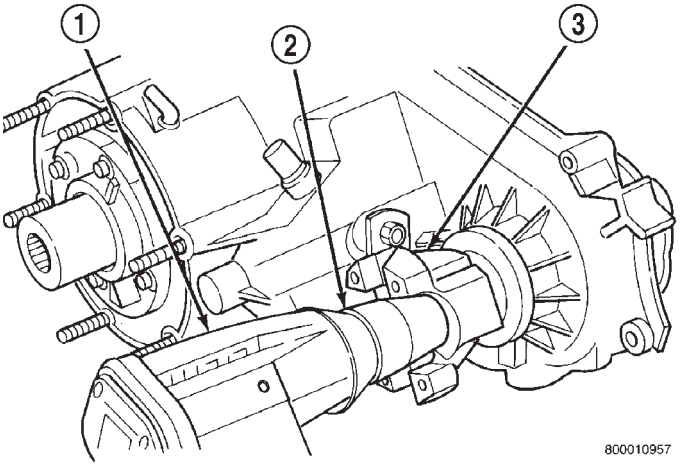

Fig. 19 Yoke Nut Removal

1 - IMPACT WRENCH
2 - SOCKET
3 - YOKE

(2) Remove yoke. If yoke is difficult to remove by hand, remove it with bearing splitter, or with standard two jaw puller (Fig. 20). Be sure puller tool is positioned on yoke and not on slinger as slinger will be damaged.

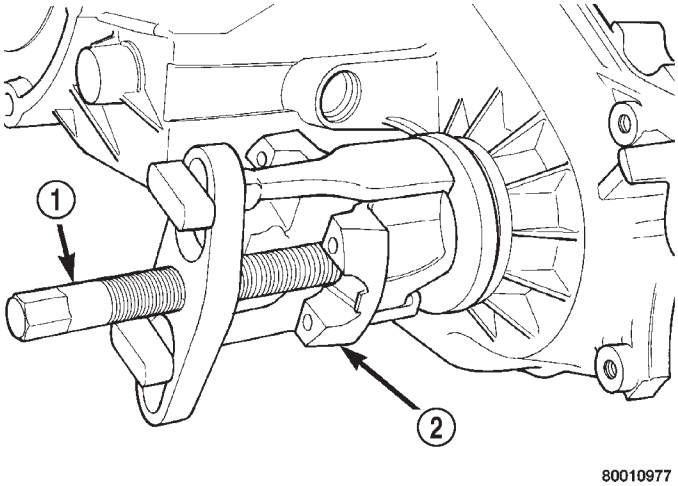

Fig. 20 Yoke Removal

1 - PULLER TOOL
2 - YOKE

(3) Remove seal washer from front output shaft. Discard washer as it should not be reused.

(4) Remove nut and washer that attach range lever to sector shaft. Then move sector to neutral position and remove range lever from shaft (Fig. 21).

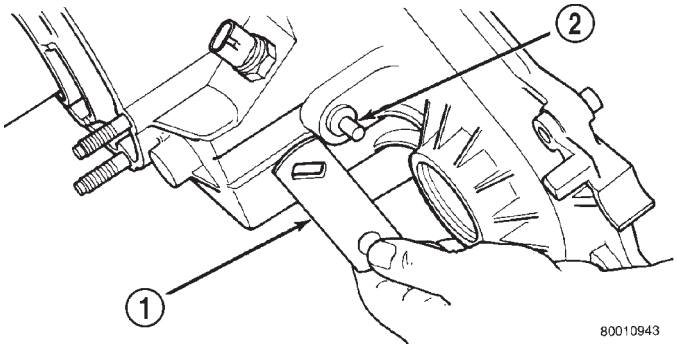

Fig. 21 Range Lever Removal

1 - RANGE LEVER
2 - SECTOR SHAFT

TRANSFER CASE - NV242 (Continued)

FRONT OUTPUT SHAFT AND DRIVE CHAIN

(1) Remove drive sprocket snap-ring (Fig. 22).

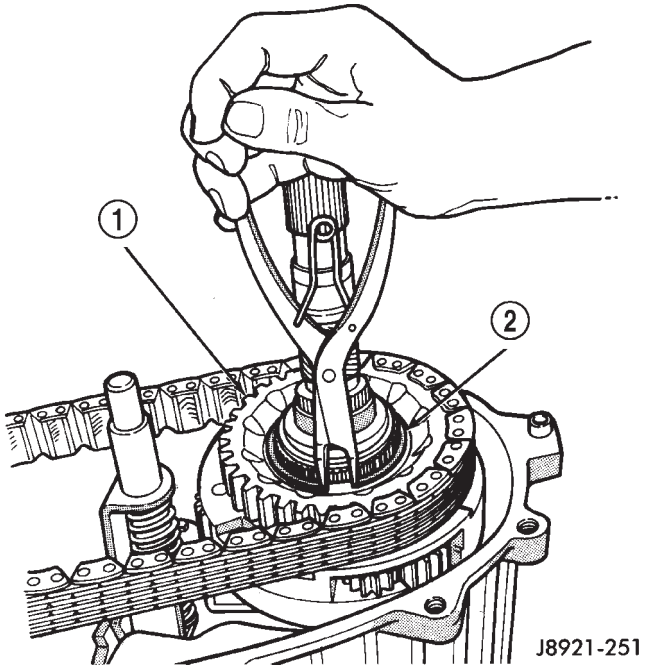

Fig. 22 Drive Sprocket Snap-Ring Removal

1 - DRIVE SPROCKET
2 - DRIVE SPROCKET SNAP-RING

(2) Remove drive sprocket and chain (Fig. 23).
(3) Remove front output shaft (Fig. 24).

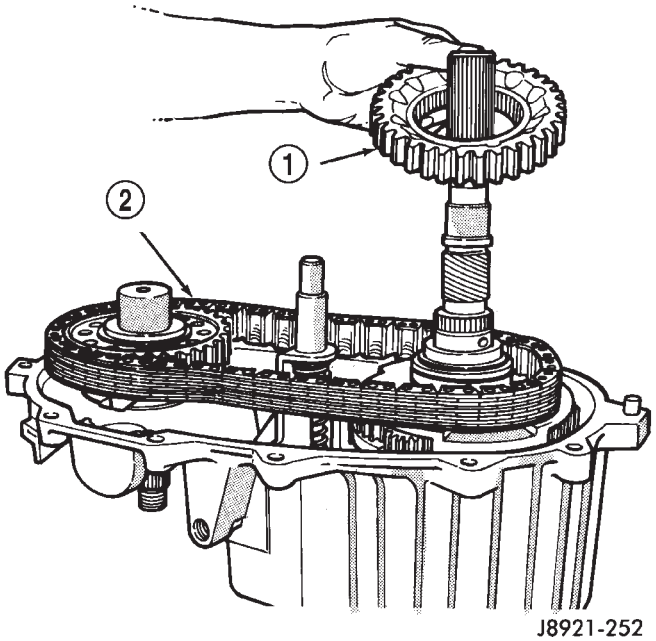

Fig. 23 Drive Sprocket And Chain Removal

1 - DRIVE SPROCKET
2 - DRIVE CHAIN

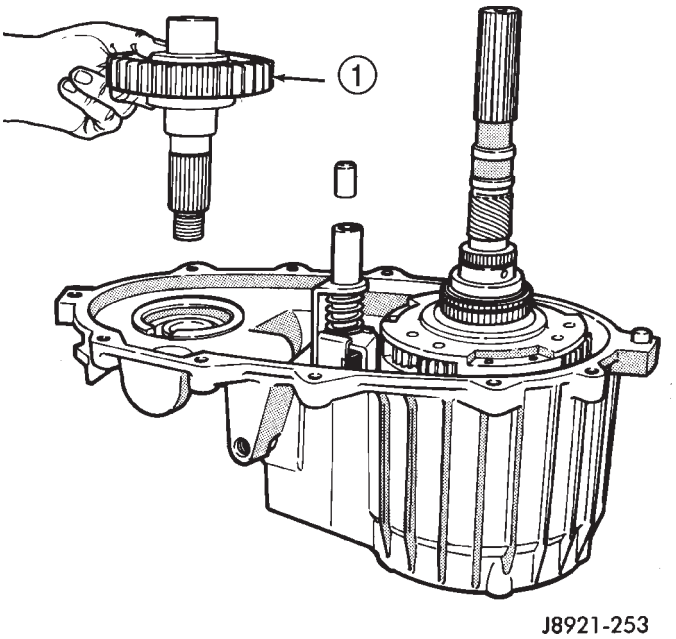

Fig. 24 Removing Front Output Shaft

1 - FRONT OUTPUT SHAFT

SHIFT FORKS AND MAINSHAFT

(1) Remove shift detent plug, spring and pin (Fig. 25).

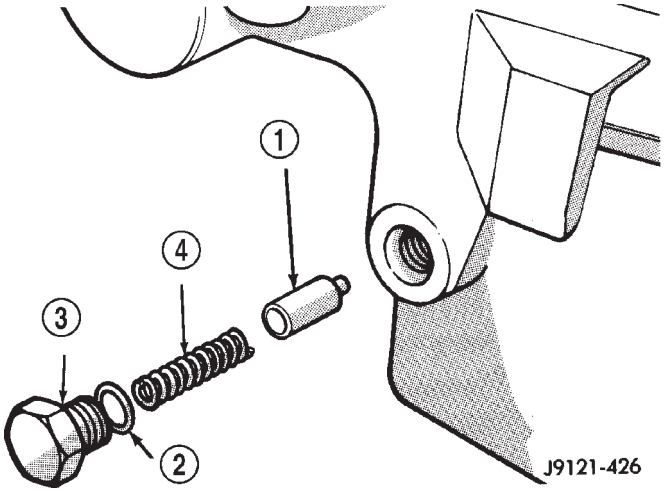

Fig. 25 Detent Pin, Spring And Plug Removal

1 - PLUNGER
2 - O-RING
3 - PLUG
4 - SPRING

TRANSFER CASE - NV242 (Continued)

(2) Remove seal plug from low range fork lockpin access hole. Then move shift sector to align low range fork lockpin with access hole.

(3) Remove range fork lockpin with size number one easy-out tool as follows:

(a) Insert easy-out tool through access hole in side of transfer case and into lock-pin.

(b) Tap easy-out tool into lock-pin with hammer until tool is securely engaged into the lock-pin.

(c) Install a t-handle, such as from a tap and die set, onto the easy-out tool.

(d) Securely tighten the t-handle onto the tool.

(e) In one motion, pull upward and turn the t-handle counter-clockwise to remove the lock-pin.

(4) Remove shift rail by pulling it straight up and out of fork (Fig. 26).

(5) Remove mode fork and mainshaft as assembly (Fig. 27).

(6) Remove mode shift sleeve and mode fork assembly from mainshaft (Fig. 28). Note position of mode sleeve in fork and remove sleeve.

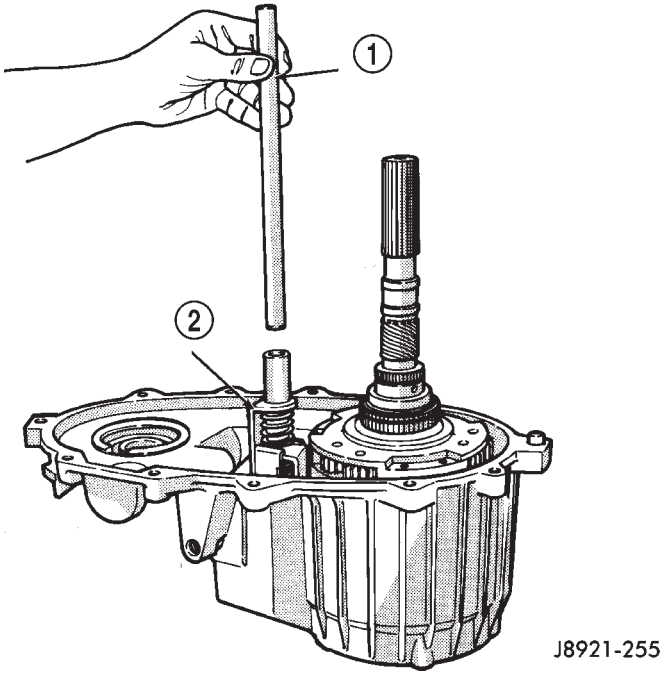

Fig. 26 Shift Rail Removal

1 - SHIFT RAIL
2 - MODE FORK

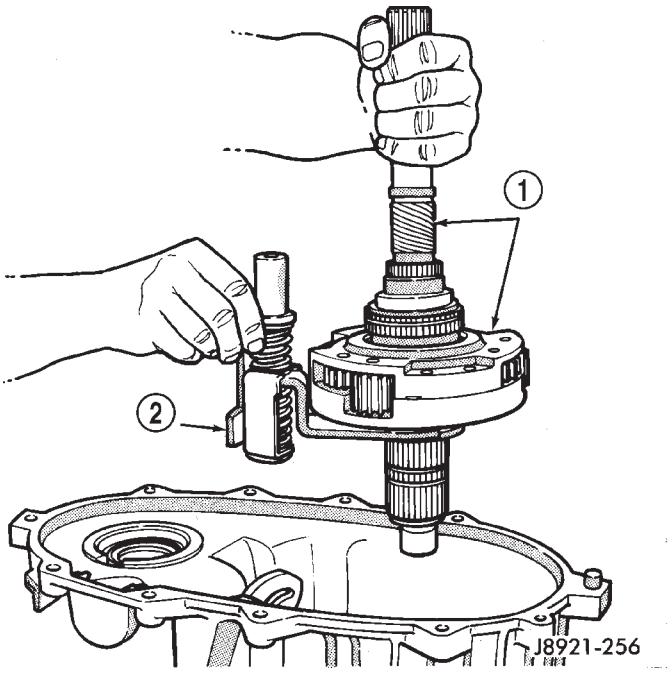

Fig. 27 Assembled Mainshaft And Mode Fork Removal

1 - MAINSHAFT ASSEMBLY
2 - MODE FORK

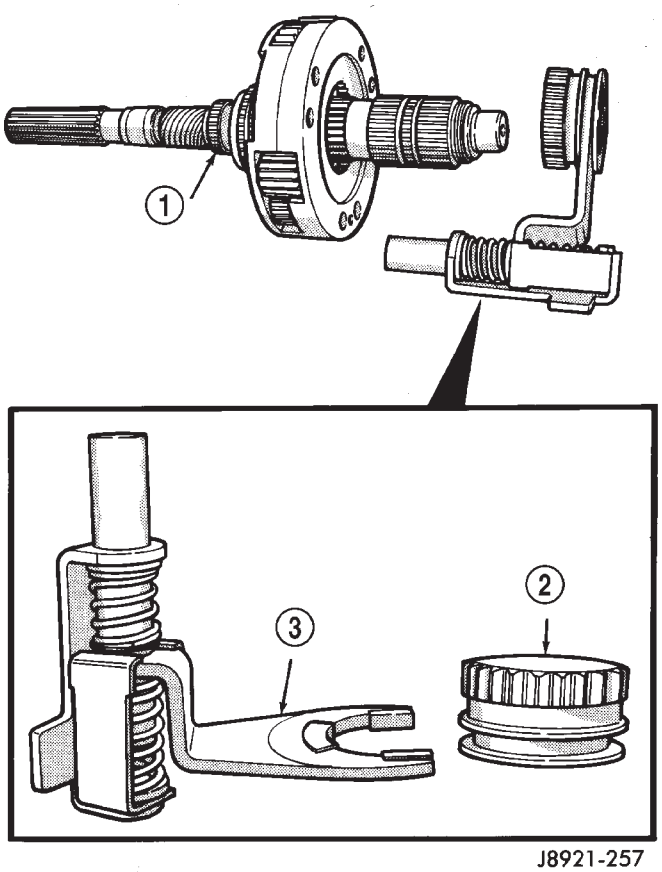

Fig. 28 Removing Mode Fork And Sleeve

1 - MAINSHAFT
2 - SLEEVE
3 - MODE FORK ASSEMBLY

TRANSFER CASE - NV242 (Continued)

(7) Remove intermediate clutch shaft snap-ring (Fig. 29).
(8) Remove clutch shaft thrust ring (Fig. 30).
(9) Remove intermediate clutch shaft (Fig. 31).

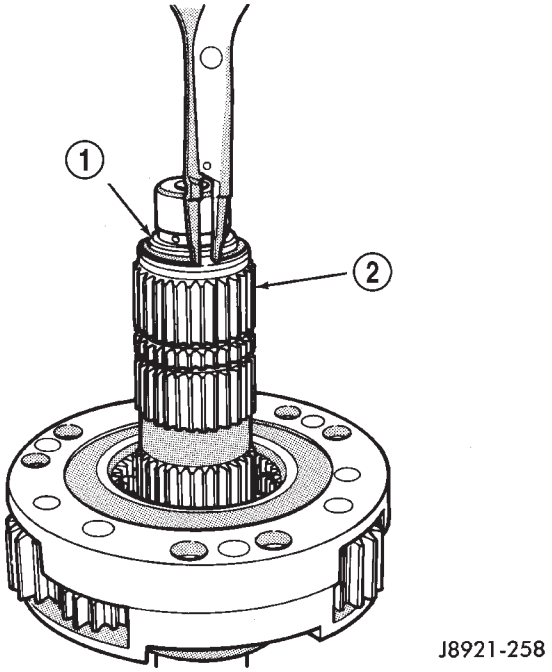

Fig. 29 Removing Clutch Shaft Snap-Ring

1 - SNAP-RING
2 - INTERMEDIATE CLUTCH SHAFT

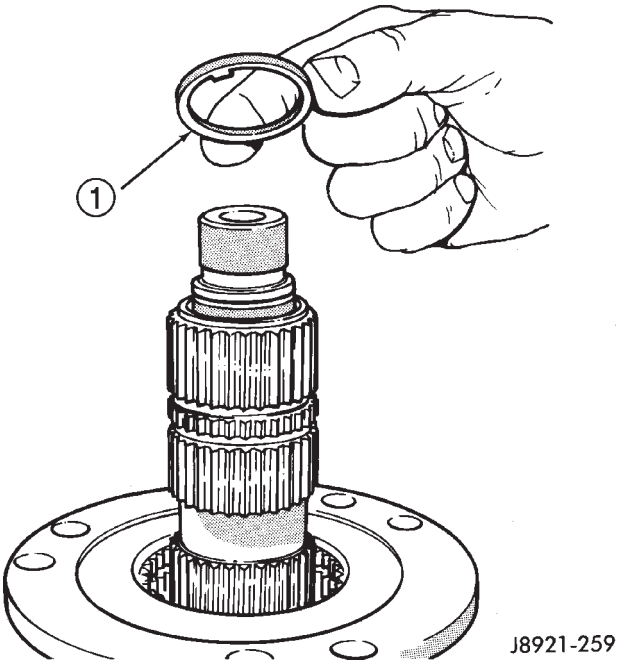

Fig. 30 Removing Clutch Shaft Thrust Washer

1 - CLUTCH SHAFT THRUST RING

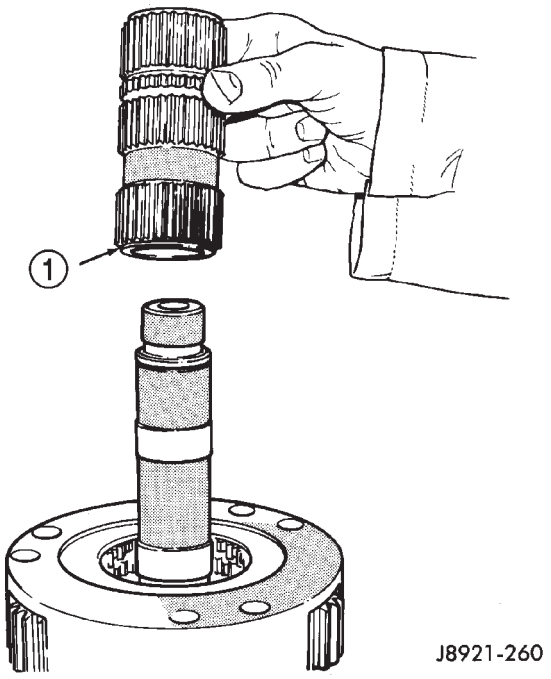

Fig. 31 Removing Intermediate Clutch Shaft

1 - INTERMEDIATE CLUTCH SHAFT

(10) Remove differential snap-ring (Fig. 32).
(11) Remove differential (Fig. 33).
(12) Remove differential needle bearings and both needle bearing thrust washers from mainshaft.

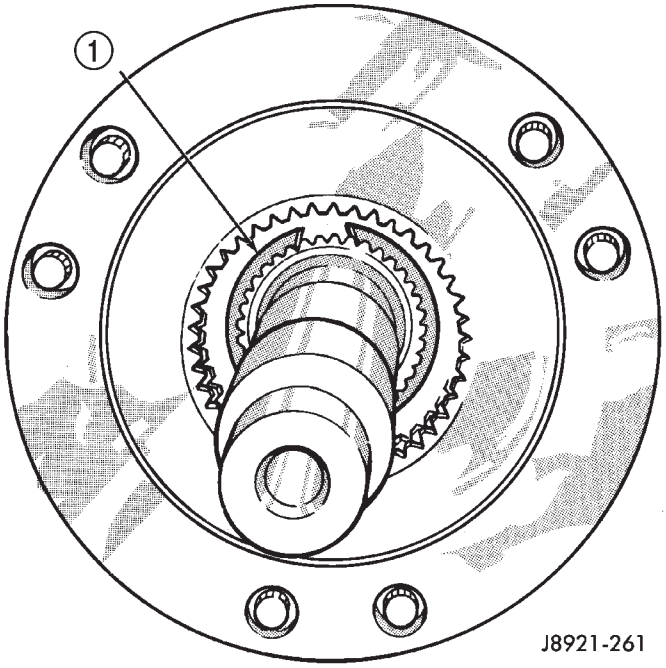

Fig. 32 Removing Differential Snap-Ring

1 - DIFFERENTIAL SNAP-RING

TRANSFER CASE - NV242 (Continued)

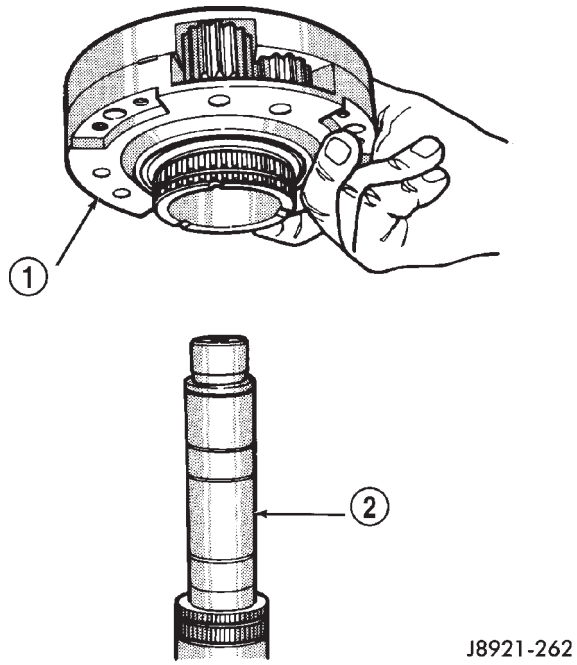

Fig. 33 Differential Removal

1 - DIFFERENTIAL
2 - MAINSHAFT

(13) Slide low range fork pin out of shift sector slot (Fig. 34).
(14) Remove low range fork and hub (Fig. 35).
(15) Remove shift sector.

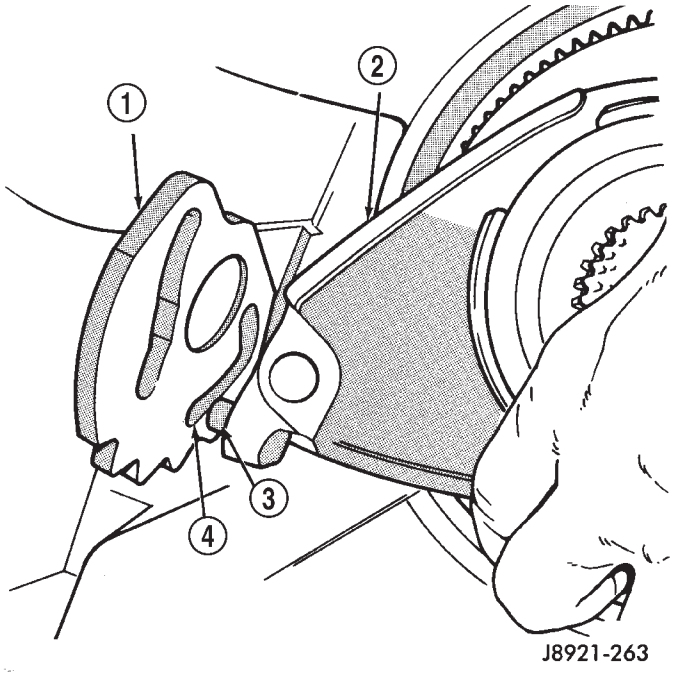

Fig. 34 Disengaging Low Range Fork

1 - SHIFT SECTOR
2 - LOW RANGE FORK
3 - PIN
4 - SLOT

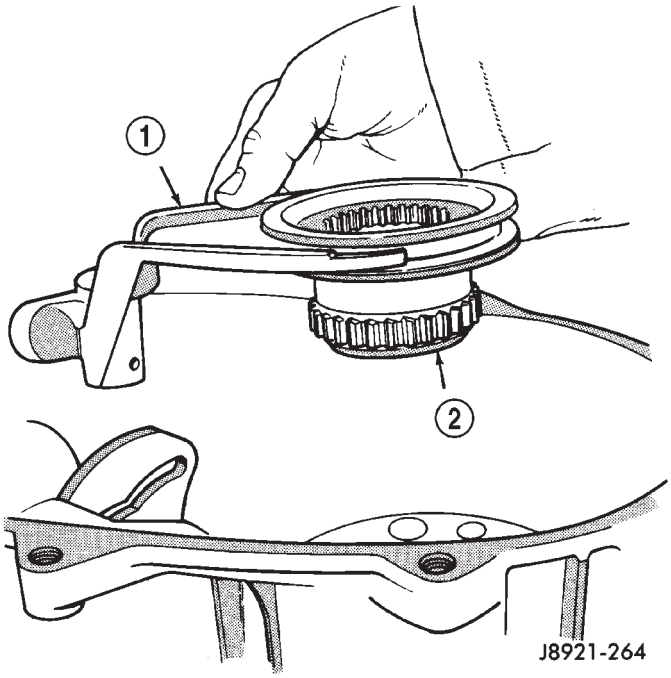

Fig. 35 Low Range Fork And Hub Removal

1 - LOW RANGE FORK
2 - FORK HUB

(16) Remove shift sector bushing and O-ring (Fig. 36).

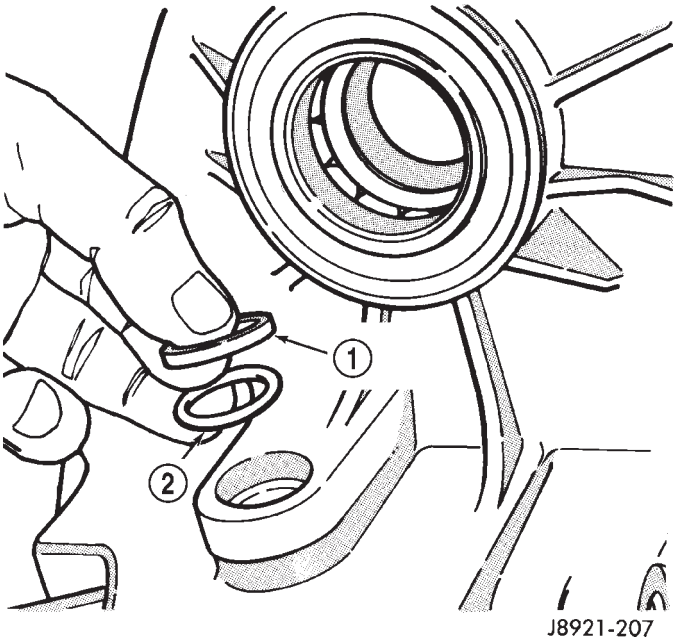

Fig. 36 Sector Bushing And O-Ring Removal

1 - SHIFT SECTOR BUSHING
2 - O-RING

TRANSFER CASE - NV242 (Continued)

INPUT GEAR/LOW RANGE ASSEMBLY

(1) Remove front bearing retainer bolts.

(2) Remove front bearing retainer. Carefully pry retainer loose with screwdriver (Fig. 37). Position screwdriver in slots cast into retainer.

(3) Remove input gear snap-ring (Fig. 38).

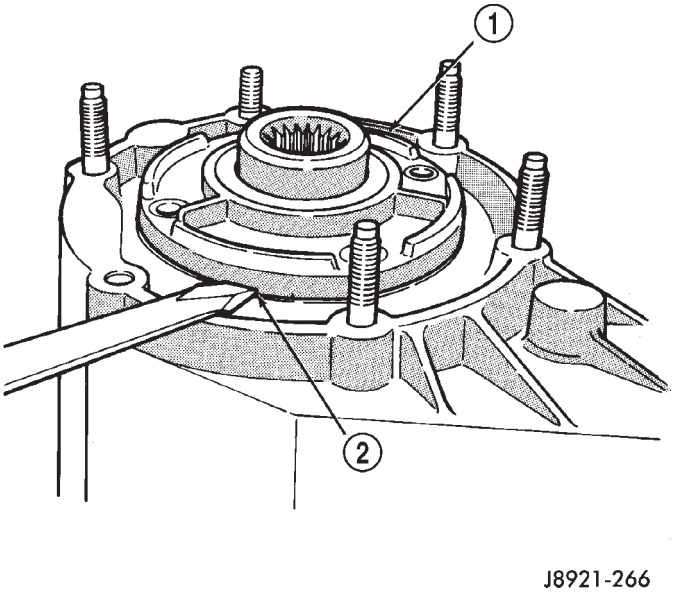

Fig. 37 Front Bearing Retainer Removal

1 - FRONT BEARING RETAINER
2 - RETAINER SLOT

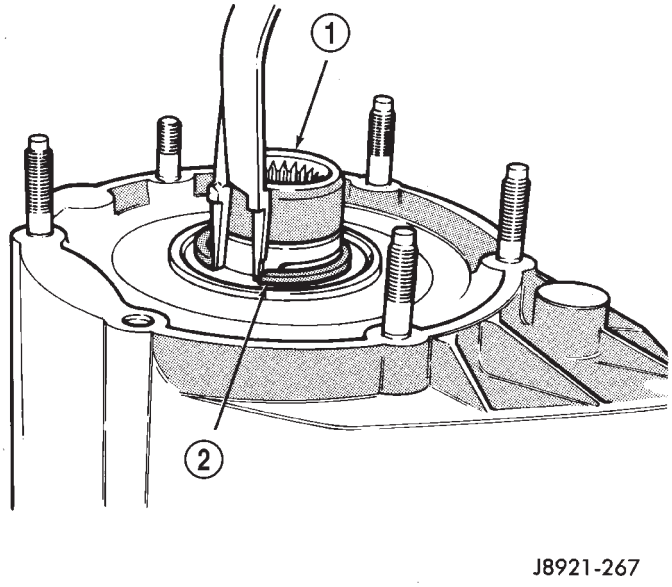

Fig. 38 Input Gear Snap Ring Removal

1 - INPUT GEAR
2 - SNAP-RING

(4) Remove input/low range gear assembly from bearing with Tool Handle C-4171 and Tool 7829A (Fig. 39).

(5) Remove low range gear snap-ring (Fig. 40).

(6) Remove input gear retainer, thrust washers and input gear from low range gear (Fig. 41).

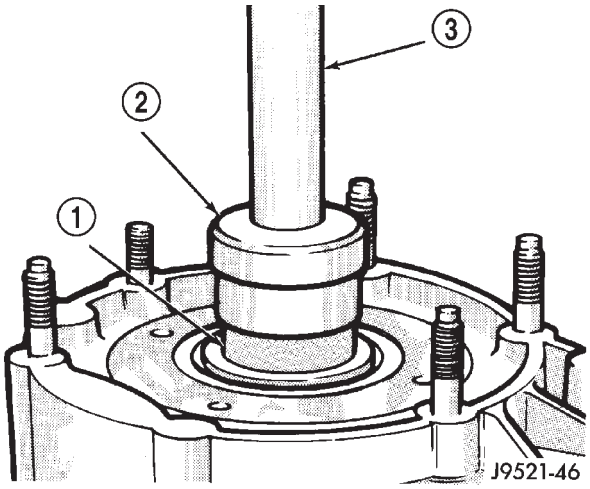

Fig. 39 Input And Low Range Gear Assembly Removal

1 - INPUT-LOW RANGE GEARS
2 - SPECIAL TOOL 7829-A
3 - SPECIAL TOOL C-4171

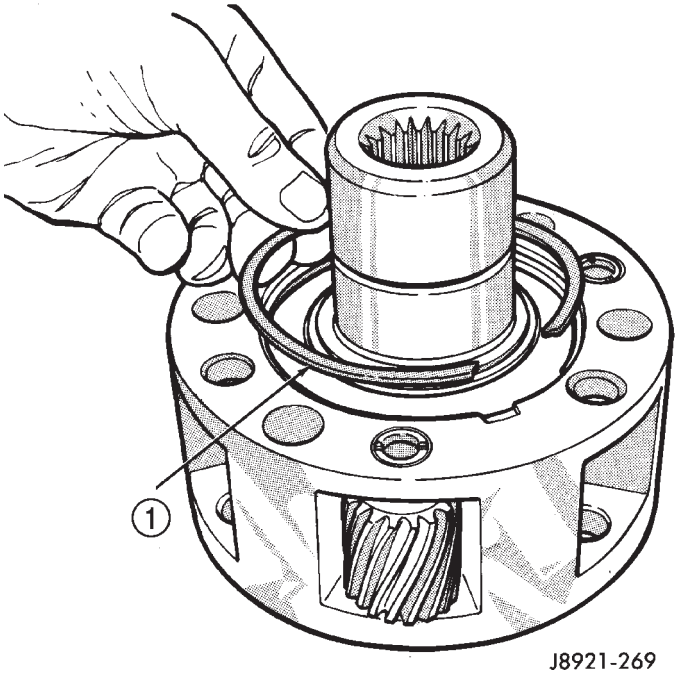

Fig. 40 Remove Low Range Gear Snap-Ring

1 - LOW RANGE GEAR SNAP-RING

TRANSFER CASE - NV242 (Continued)

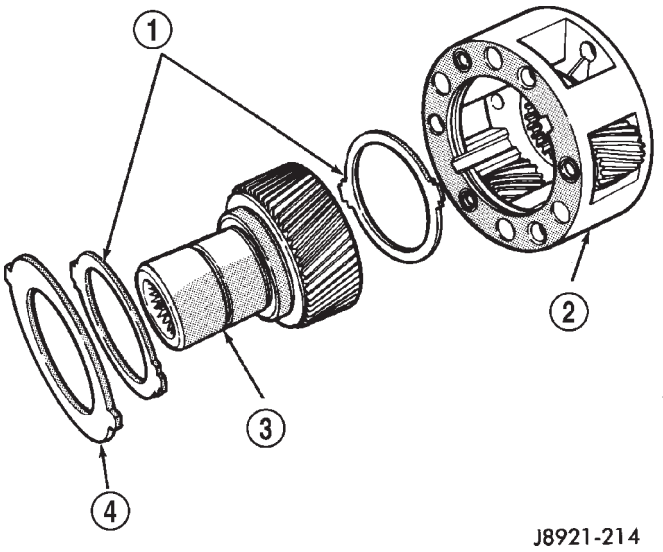

Fig. 41 Low Range And Input Gear Assembly

1 - THRUST WASHERS
2 - LOW RANGE GEAR
3 - INPUT GEAR
4 - RETAINER

(7) Inspect low range annulus gear (Fig. 42). **Gear is not a serviceable component. If damaged, replace gear and front case as assembly.**

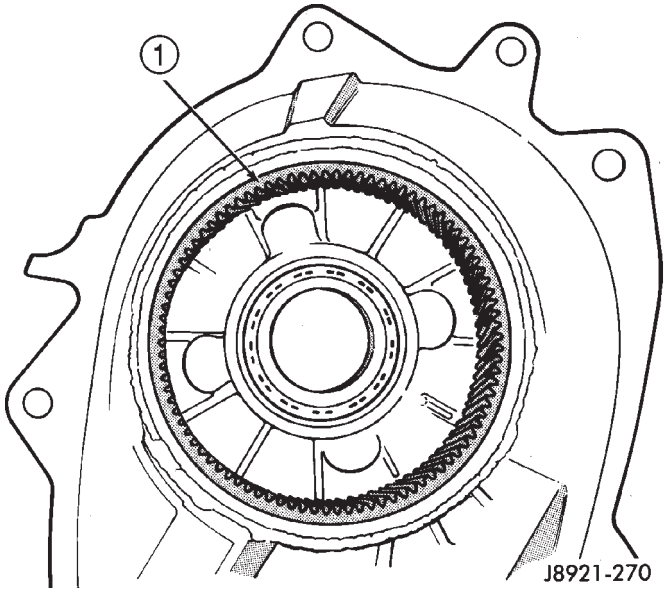

Fig. 42 Inspecting Low Range Annulus Gear

1 - LOW RANGE ANNULUS GEAR

(8) Remove oil seals from following components:
- front bearing retainer.
- rear retainer.
- oil pump.
- case halves.

DIFFERENTIAL

(1) Mark differential case halves for reference.
(2) Remove differential case bolts.
(3) Invert differential on workbench.
(4) Separate top case from bottom case. Use slots in case halves to pry them apart (Fig. 43).
(5) Remove thrust washers and planet gears from case pins (Fig. 44).
(6) Remove mainshaft and sprocket gears from bottom case (Fig. 45). Note gear position for reference before separating them.

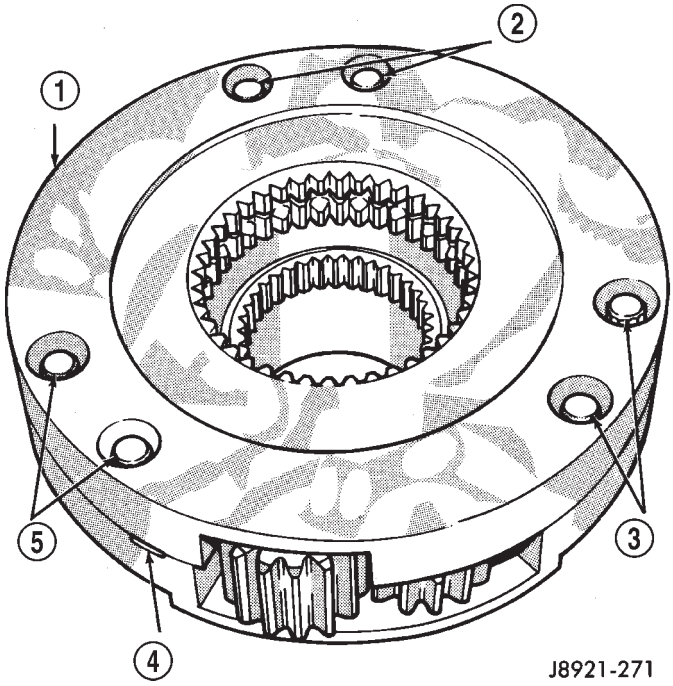

Fig. 43 Separating Differential Case Halves

1 - TOP CASE
2 - CASE BOLTS
3 - CASE BOLTS
4 - CASE SLOTS
5 - CASE BOLTS

CLEANING

Clean the transfer case parts with a standard parts cleaning solvent. Remove all traces of sealer from the cases and retainers with a scraper and all purpose cleaner. Use compressed air to remove solvent residue from oil feed passages in the case halves, retainers, gears, and shafts.

The oil pickup screen can be cleaned with solvent. Shake excess solvent from the screen after cleaning and allow it to air dry. Do not use compressed air.

TRANSFER CASE - NV242 (Continued)

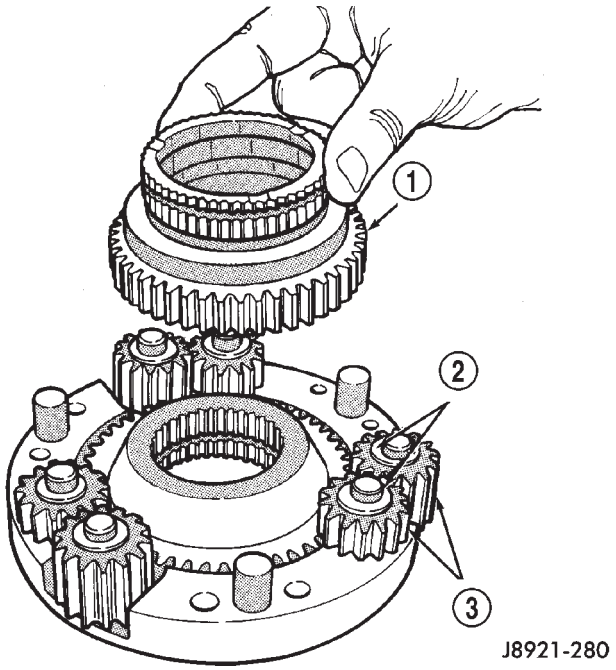

Fig. 44 Planet Gears And Thrust Washer Removal

1 - MAINSHAFT GEAR
2 - THRUST WASHERS (12)
3 - PLANET GEARS (6)

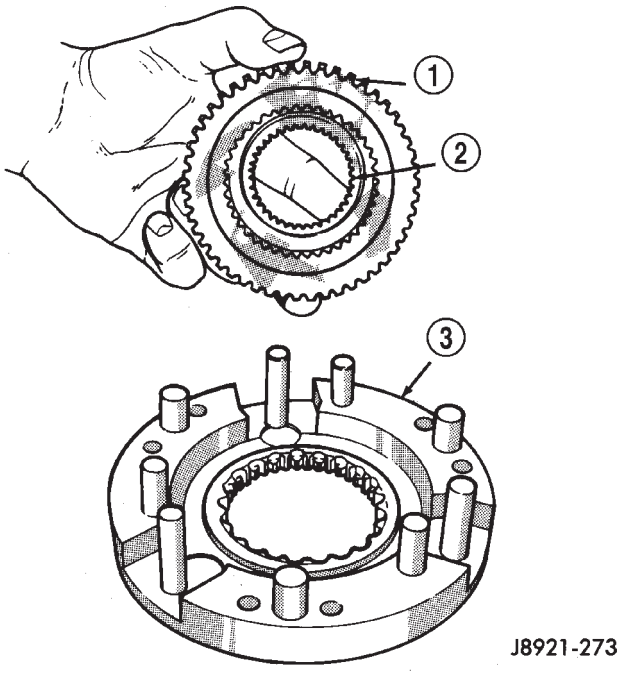

Fig. 45 Mainshaft And Sprocket Gear Removal

1 - MAINSHAFT GEAR
2 - SPROCKET GEAR
3 - BOTTOM CASE

INSPECTION

CASES AND FRONT RETAINER

Inspect the cases and retainer for wear and damage. Clean the sealing surfaces with a scraper and all purpose cleaner. This will ensure proper sealer adhesion at assembly. Replace the input retainer seal; do not reuse it.

Check case condition. If leaks were a problem, look for gouges and severe scoring of case sealing surfaces. Also make sure the front case mounting studs are in good condition.

Check the front case mounting studs and vent tube. The tube can be secured with Loctite™ 271 or 680 if loose. The stud threads can be cleaned up with a die if necessary. Also check condition of the fill/drain plug threads in the rear case. The threads can be repaired with a thread chaser or tap if necessary. Or the threads can be repaired with Helicoil stainless steel inserts if required.

INPUT GEAR

Check the teeth on the gear (Fig. 46). Minor nicks can be dressed off with an oilstone but replace the gear if any teeth are broken, cracked, or chipped. The bearing surface on the gear can be smoothed with 300-400 grit emery cloth if necessary.

Examine the carrier body and pinion gears for wear or damage. The carrier will have to be replaced as an assembly if the body, pinion pins, or pinion gears are damaged.

Check the lock ring and both thrust washers for wear or cracks. Replace them if necessary. Also replace the lock retaining ring if bent, distorted, or broken.

LOW RANGE ANNULUS GEAR

Inspect annulus gear condition carefully. The gear is only serviced as part of the front case. If the gear is damaged, it will be necessary to replace the gear and front case as an assembly. Do not attempt to remove the gear (Fig. 47).

MAINSHAFT

Inspect the splines on the hub and shaft and the teeth on the sprocket. Minor nicks and scratches can be smoothed with an oilstone. However, replace any part is damaged.

Check the contact surfaces in the sprocket bore and on the mainshaft. Minor nicks and scratches can be smoothed with 320-400 grit emery cloth but do not try to salvage the shaft if nicks or wear is severe.

TRANSFER CASE - NV242 (Continued)

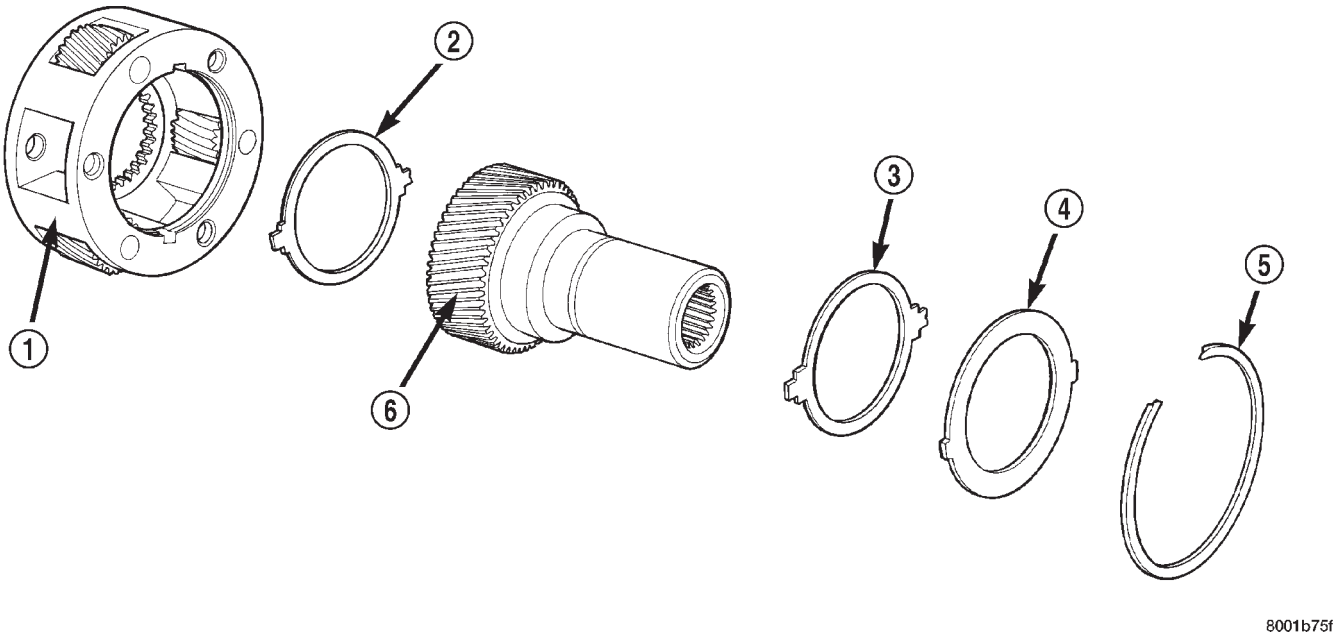

Fig. 46 Input Gear

1 - PLANETARY CARRIER
2 - REAR THRUST WASHER
3 - FRONT THRUST WASHER
4 - CARRIER LOCK RING
5 - CARRIER LOCK RETAINING RING
6 - INPUT GEAR

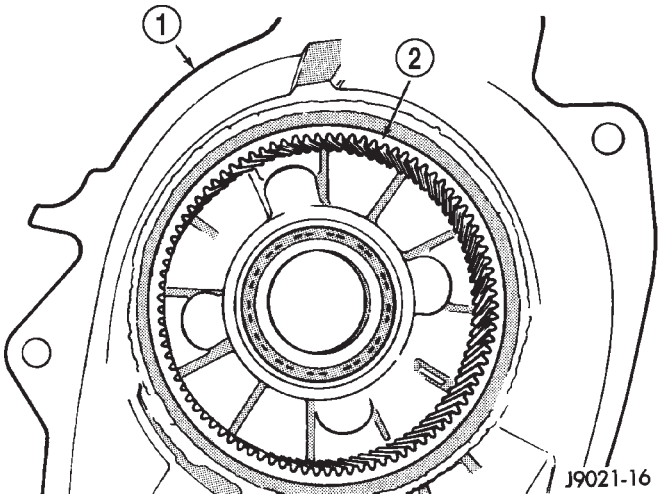

Fig. 47 Low Range Annulus Gear

1 - FRONT CASE
2 - LOW RANGE ANNULUS GEAR

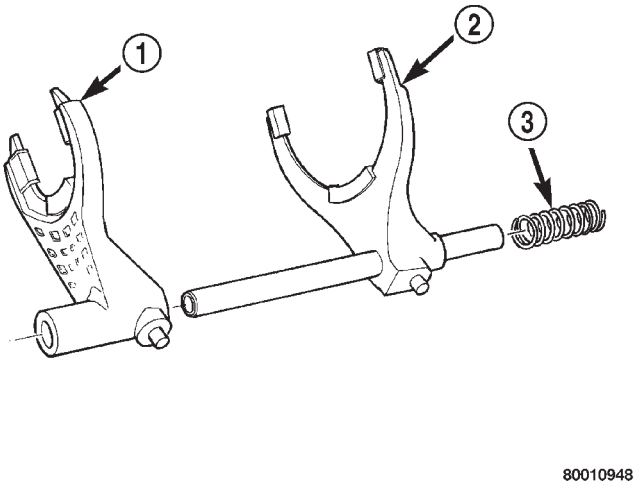

Fig. 48 Shift Forks

1 - RANGE FORK
2 - MODE FORK AND RAIL
3 - MODE SPRING

SHIFT FORK

Check condition of the shift forks and mode fork shift rail (Fig. 48). Minor nicks on the shift rail can be smoothed with 320-400 grit emery cloth.

Inspect the shift fork wear pads. The mode fork pads are serviceable and can be replaced if necessary. The range fork pads are also serviceable.

Check both of the sleeves for wear or damage, especially on the interior teeth. Replace the sleeves if wear or damage is evident.

OIL PUMP

Examine the oil pump pickup parts. Replace the pump if any part appears to be worn or damaged. Do

TRANSFER CASE - NV242 (Continued)

not disassemble the pump as individual parts are not available. The pump is only available as a complete assembly. The pickup screen, hose, and tube are the only serviceable parts and are available separately.

OUTPUT SHAFT SLINGER

Check condition of the seal contact surfaces of the yoke slinger (Fig. 49). This surface must be clean and smooth to ensure proper seal life. Replace the yoke nut and seal washer as neither part should be reused.

Inspect the shaft threads, sprocket teeth, and bearing surfaces. Minor nicks on the teeth can be smoothed with an oilstone. Use 320-400 grit emery to smooth minor scratches on the shaft bearing surfaces. Rough threads on the shaft can be chased if necessary. Replace the shaft if the threads are damaged, bearing surfaces are scored, or if any sprocket teeth are cracked or broken.

Examine the drive chain and shaft bearings. Replace the chain and both sprockets if the chain is stretched, distorted, or if any of the links bind. Replace the bearings if rough, or noisy.

REAR RETAINER

Inspect the retainer components (Fig. 50). Replace the bearing if rough or noisy. Check the retainer for cracks or wear in the bearing bore. Clean the retainer sealing surfaces with a scraper and all purpose cleaner. This will ensure proper adhesion of the sealer during reassembly.

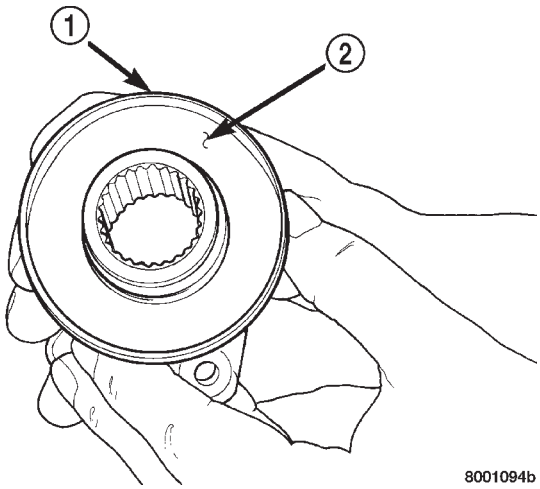

Fig. 49 Seal Contact Surface Of Slinger

1 - FRONT SLINGER (PART OF YOKE)
2 - SEAL CONTACT SURFACE MUST BE CLEAN AND SMOOTH

Replace the slinger and seal outright; do not reuse either part.

Inspect the retaining rings and washers. Replace any part if distorted, bent, or broken. Reuse is not recommended. Also replace the boot if cut or torn. Replace the boot band clamps, do not reuse them.

TRANSFER CASE - NV242 (Continued)

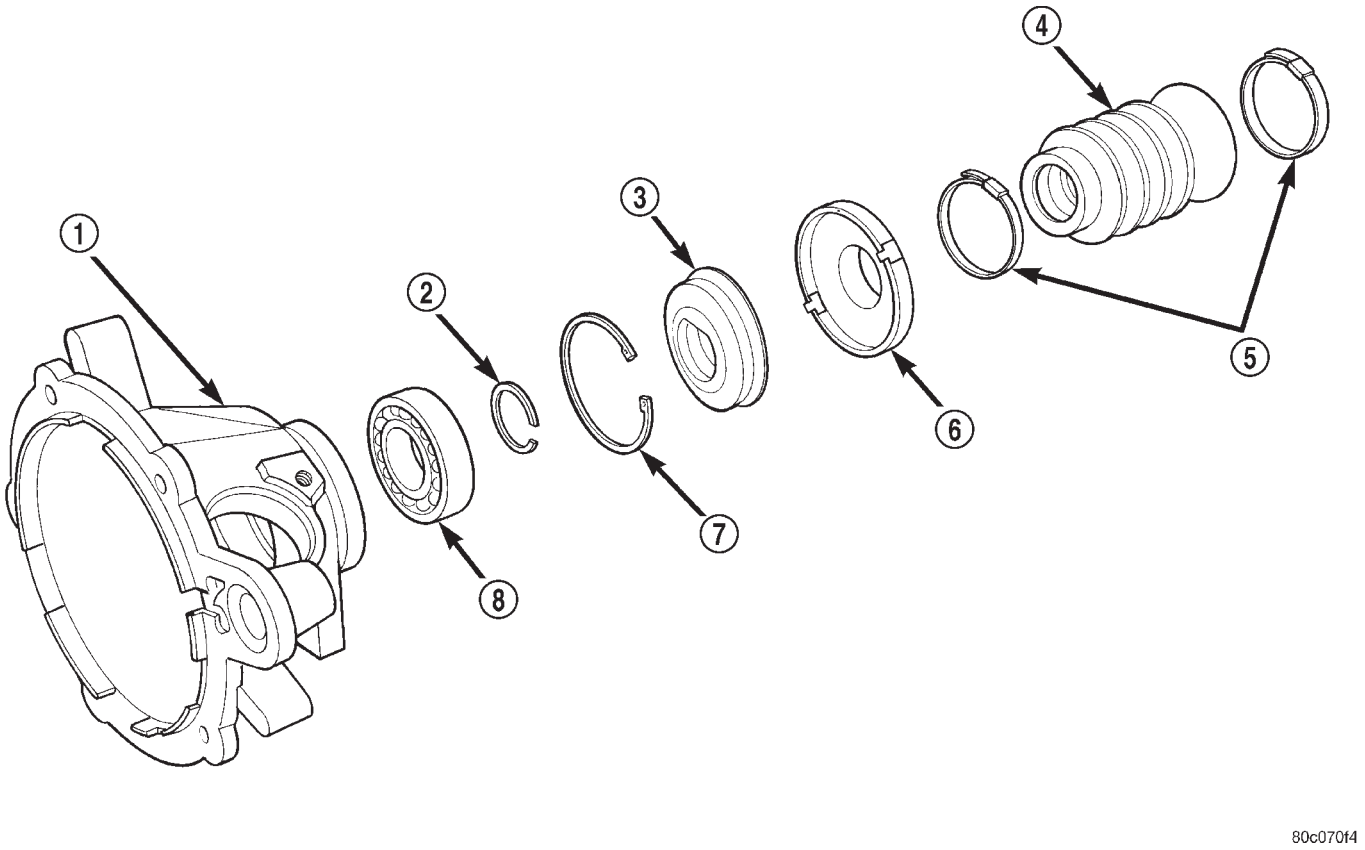

Fig. 50 Rear Retainer Components

1 - REAR RETAINER
2 - REAR BEARING I.D. RETAINING RING
3 - REAR SEAL
4 - BOOT
5 - BAND CLAMPS
6 - REAR SLINGER
7 - REAR BEARING O.D. RETAINING RING
8 - REAR BEARING

TRANSFER CASE - NV242 (Continued)

ASSEMBLY

Lubricate transfer case components with automatic transmission fluid or petroleum jelly (where indicated) during assembly.

CAUTION: The bearing bores in various transfer case components contain oil feed holes. Make sure replacement bearings do not block the holes.

BEARING AND SEAL

(1) Remove snap-ring that retains front output shaft front bearing in case (Fig. 51). Then remove bearing. Use hammer handle, or hammer and brass punch to tap bearing out of case.

(2) Install new front output shaft front bearing with Tool Handle C-4171 and Installer 8033-A with the tapered cone upward (Fig. 52).

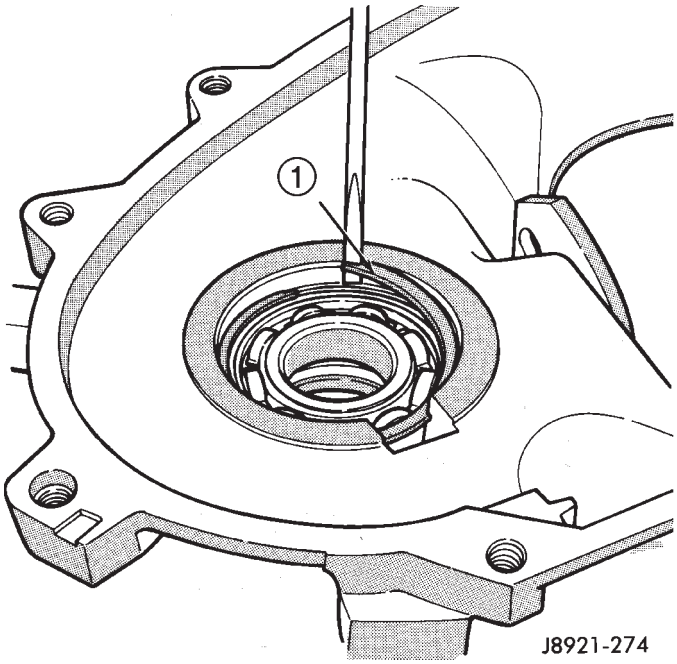

Fig. 51 Front Output Shaft Front Bearing Snap-Ring Removal

1 - FRONT BEARING SNAP-RING

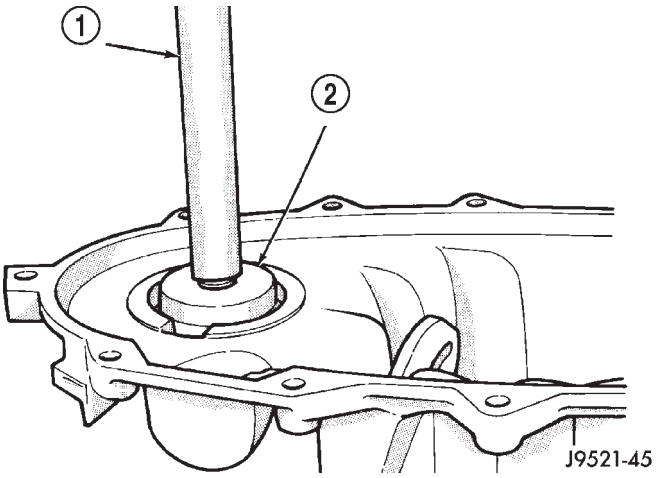

Fig. 52 Front Output Shaft Front Bearing Installation

1 - SPECIAL TOOL C-4171
2 - SPECIAL TOOL 8033-A

(3) Install front bearing snap-ring (Fig. 51).

(4) Remove front output shaft seal using an appropriate pry tool (Fig. 53) or slide-hammer mounted screw.

(5) Install new front output shaft oil seal with Installer 6952-A (Fig. 54).

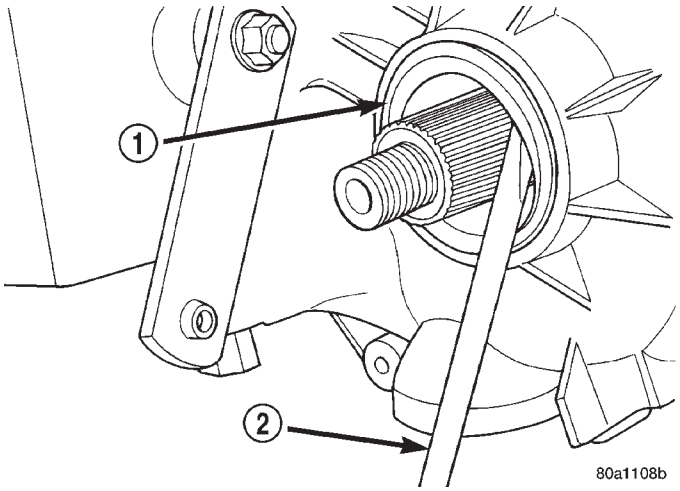

Fig. 53 Remove Front Output Shaft Seal

1 - OUTPUT SHAFT SEAL
2 - PRYBAR

TRANSFER CASE - NV242 (Continued)

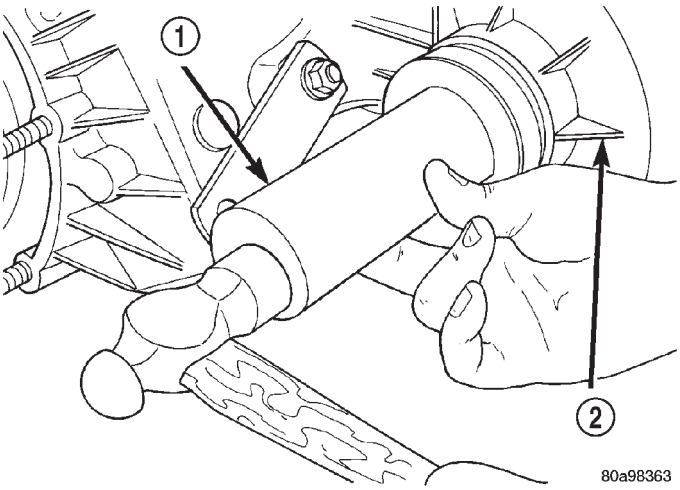

Fig. 54 Install Front Output Shaft Seal

1 - INSTALLER 6952-A
2 - TRANSFER CASE

(6) Remove input gear bearing with Tool Handle C-4171 and Remover C-4210 (Fig. 55).

(7) Install snap-ring on new input gear bearing.

(8) Install new input gear bearing with Tool Handle C-4171 and Remover C-4210. Install bearing far enough to seat snap-ring against case (Fig. 56).

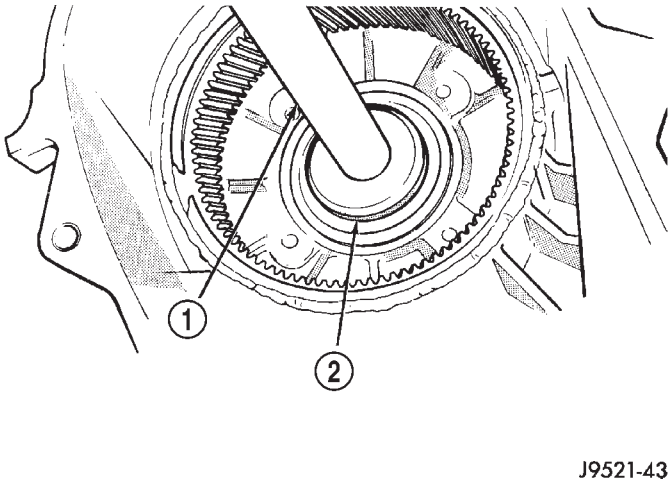

Fig. 55 Input Gear Bearing Removal

1 - SPECIAL TOOL C-4171
2 - SPECIAL TOOL C-4210

(9) Remove the input gear pilot bearing by inserting a suitably sized drift into the splined end of the input gear and driving the bearing out with the drift and a hammer (Fig. 57).

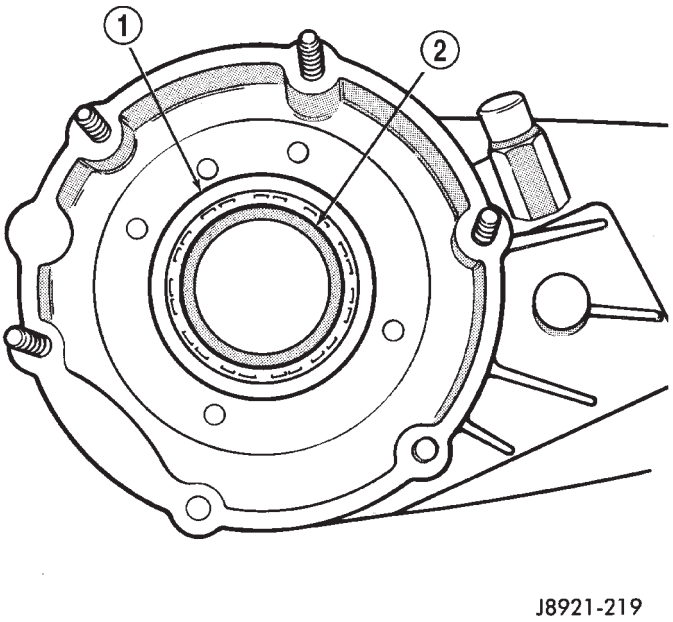

Fig. 56 Seating Input Gear Bearing

1 - SNAP-RING
2 - INPUT SHAFT BEARING

(10) Install new pilot bearing with Installer 8128 and Handle C-4171 (Fig. 58).

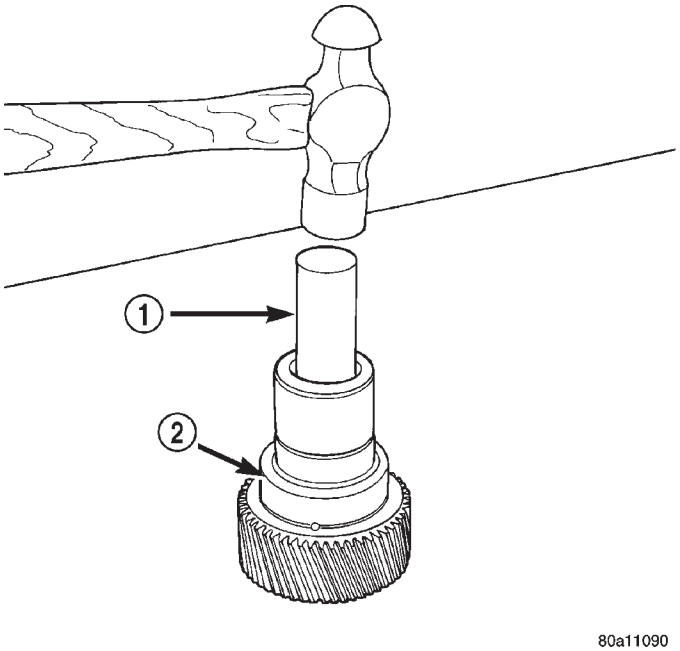

Fig. 57 Remove Input Gear Pilot Bearing

1 - DRIFT
2 - INPUT GEAR

TRANSFER CASE - NV242 (Continued)

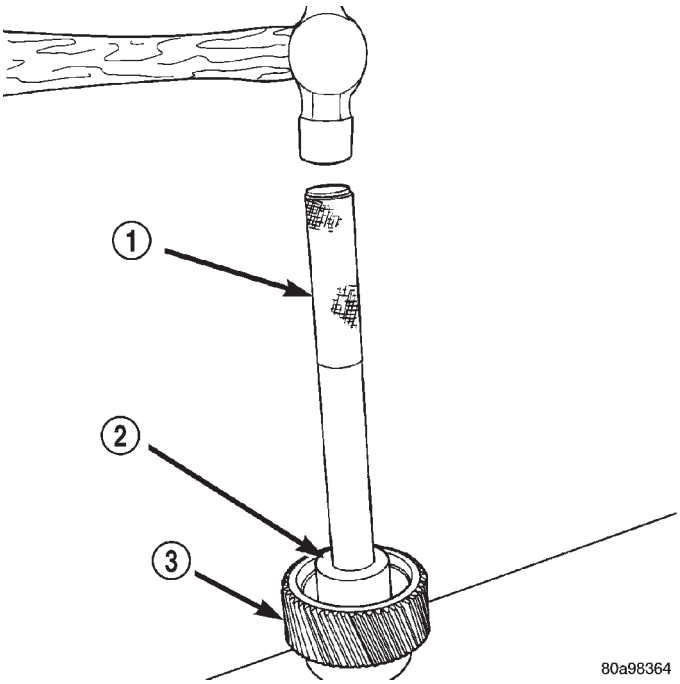

Fig. 58 Install Input Gear Pilot Bearing

1 - HANDLE C-4171
2 - INSTALLER 8128
3 - INPUT GEAR

(11) Install new seal in front bearing retainer with Installer 7884 (Fig. 59).

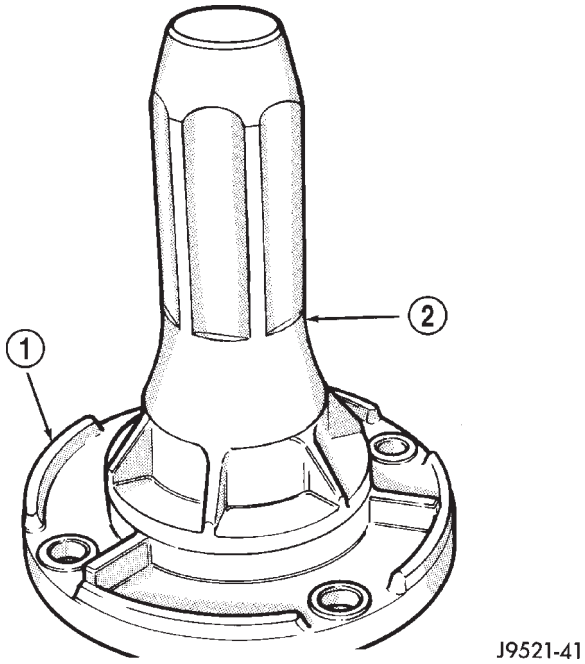

Fig. 59 Front Bearing Retainer Seal Installation

1 - FRONT BEARING RETAINER
2 - SPECIAL TOOL 7884

(12) Remove output shaft rear bearing with the screw and jaws from Remover L-4454 and Cup 8148 (Fig. 60).

(13) Install new bearing with Tool Handle C-4171 and Installer 5066 (Fig. 61). Lubricate bearing after installation.

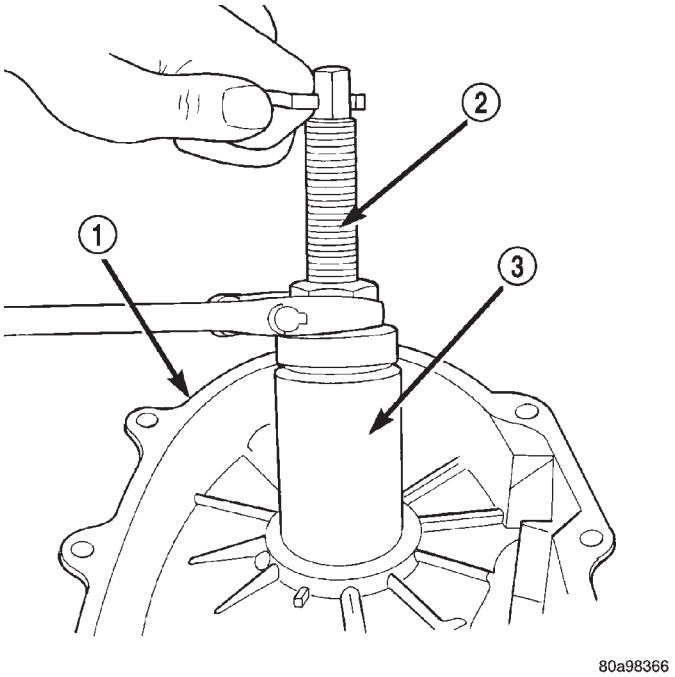

Fig. 60 Remove Front Output Shaft Rear Bearing

1 - REAR CASE
2 - SPECIAL TOOL L-4454-1 AND L-4454-3
3 - SPECIAL TOOL 8148

(14) Install new seal in oil pump feed housing with Special Tool 7888 (Fig. 62).

(15) Install new pickup tube O-ring in oil pump (Fig. 63).

(16) Remove rear retainer bearing with Installer 8128 and Handle C-4171, NV242HD only.

(17) Install rear bearing in retainer with Handle C-4171 and Installer 5064 (Fig. 64), NV242HD only.

TRANSFER CASE - NV242 (Continued)

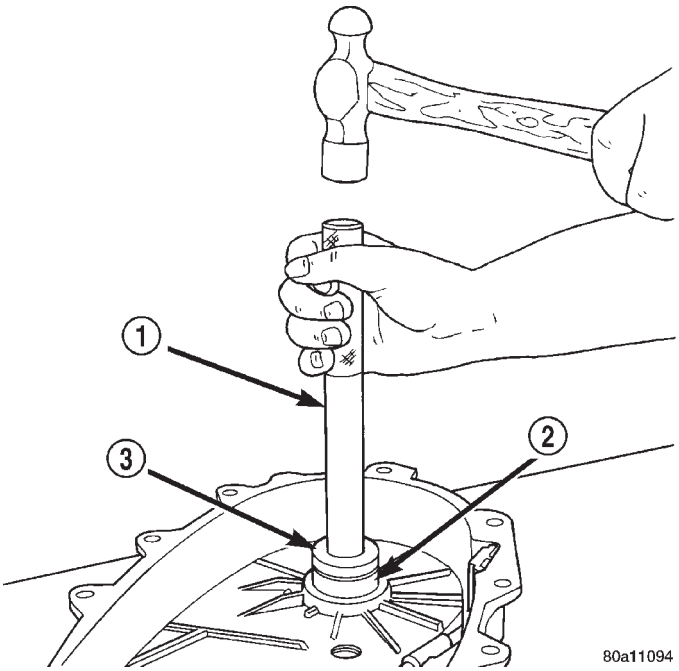

Fig. 61 Install Front Output Shaft Rear Bearing

1 - HANDLE C-4171
2 - OUTPUT SHAFT INNER BEARING
3 - INSTALLER 5066

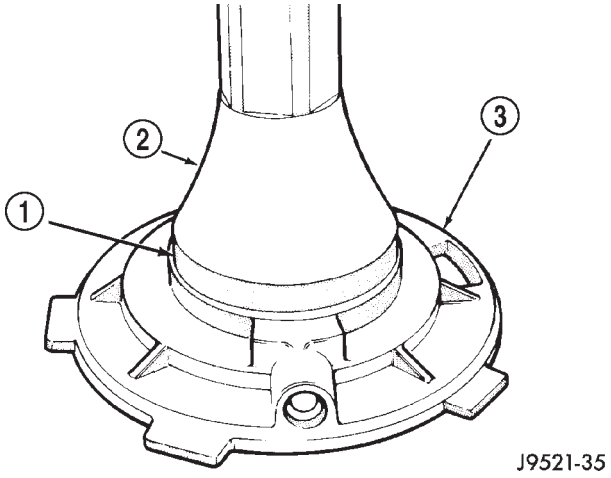

Fig. 62 Oil Pump Seal Installation

1 - HOUSING SEAL
2 - SPECIAL TOOL 7888
3 - OIL PUMP FEED HOUSING

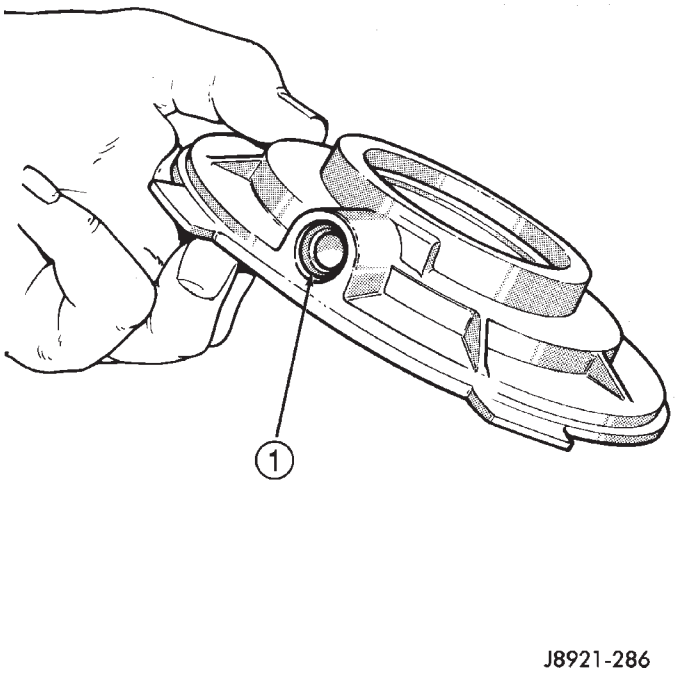

Fig. 63 Pickup Tube O-Ring Installation

1 - PICKUP TUBE O-RING

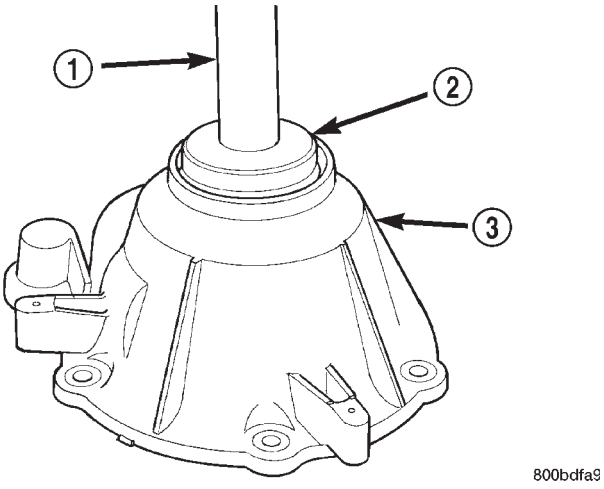

Fig. 64 Installing Rear Bearing In Retainer

1 - SPECIAL TOOL C-4171
2 - SPECIAL TOOL 5064
3 - REAR RETAINER

TRANSFER CASE - NV242 (Continued)

DIFFERENTIAL

(1) Lubricate differential components with automatic transmission fluid.

(2) Install sprocket gear in differential bottom case (Fig. 65).

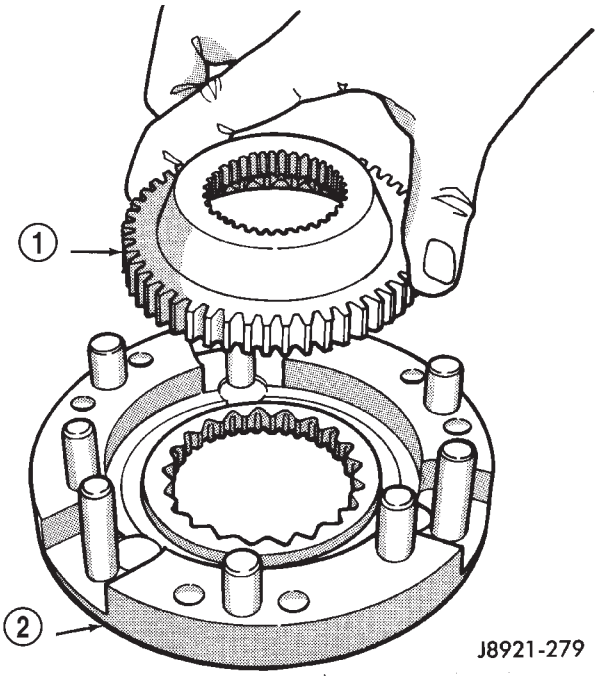

Fig. 65 Installing Differential Sprocket Gear

1 - SPROCKET GEAR
2 - BOTTOM CASE

(3) Install differential planet gears and new thrust washers (Fig. 66). **Be sure thrust washers are installed at top and bottom of each planet gear.**

(4) Install differential mainshaft gear (Fig. 66).

(5) Align and position differential top case on bottom case (Fig. 67). Align using scribe marks made at disassembly.

(6) While holding differential case halves together, invert the differential and start the differential case bolts.

(7) Tighten differential case bolts to specified torque.

INPUT GEAR/LOW RANGE ASSEMBLY

(1) Assemble low range gear, input gear thrust washers, input gear and input gear retainer (Fig. 68).

(2) Install low range gear snap ring (Fig. 69).

(3) Lubricate input gear and low range gears with automatic transmission fluid.

(4) Start input gear shaft into front case bearing.

(5) Press input gear shaft into front bearing.

(6) Install new input gear snap ring (Fig. 70).

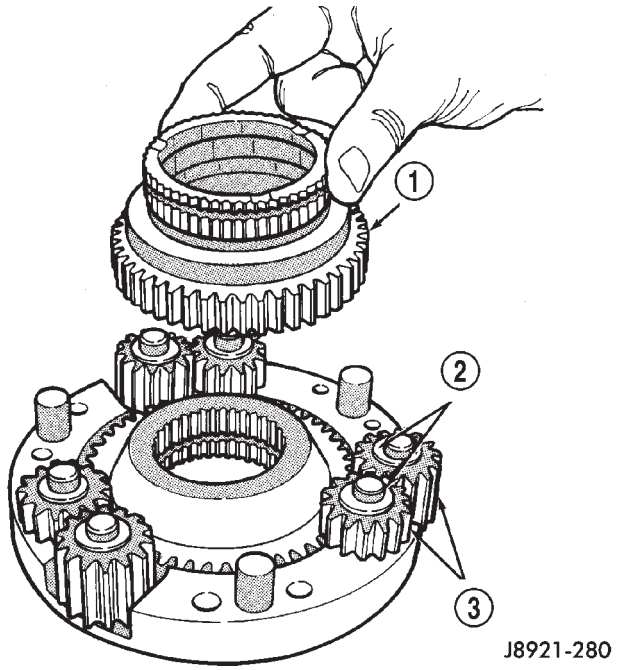

Fig. 66 Installing Mainshaft And Planet Gears

1 - MAINSHAFT GEAR
2 - THRUST WASHERS (12)
3 - PLANET GEARS (6)

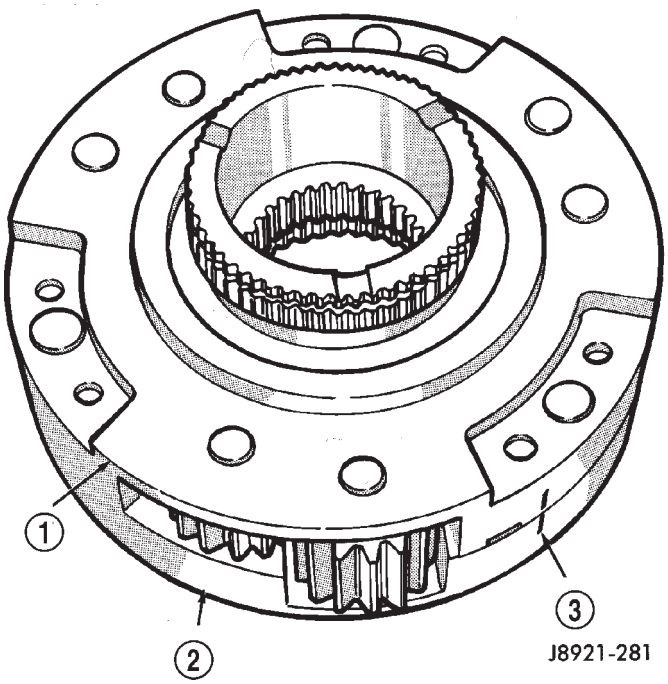

Fig. 67 Differential Case Assembly

1 - TOP CASE
2 - BOTTOM CASE
3 - CASE ALIGNMENT MARKS

TRANSFER CASE - NV242 (Continued)

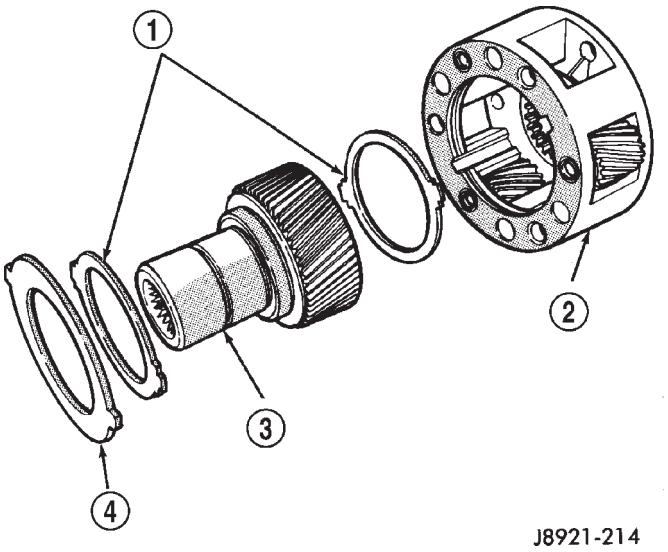

Fig. 68 Low Range And Input Gear Assembly

1 - THRUST WASHERS
2 - LOW RANGE GEAR
3 - INPUT GEAR
4 - RETAINER

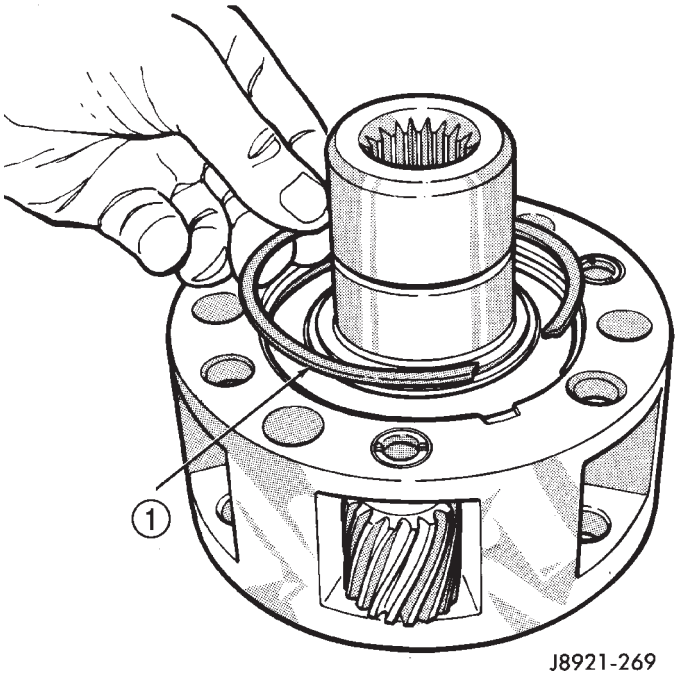

Fig. 69 Install Low Range Gear Snap-Ring

1 - LOW RANGE GEAR SNAP-RING

(7) Apply 3 mm (1/8 in.) wide bead of Mopar® gasket maker or silicone adhesive sealer to seal surface of front bearing retainer.

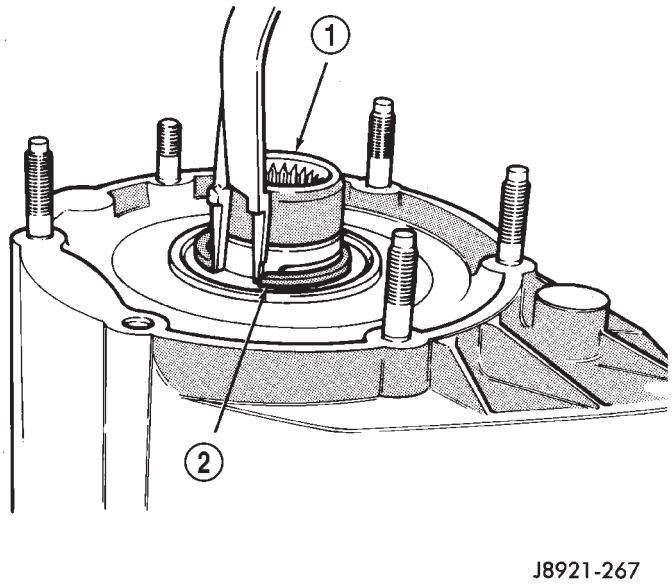

Fig. 70 Input Gear Snap-Ring Installation

1 - INPUT GEAR
2 - SNAP-RING

(8) Install front bearing retainer (Fig. 71). Tighten retainer bolts to 16 ft. lbs. (21 N·m) torque.

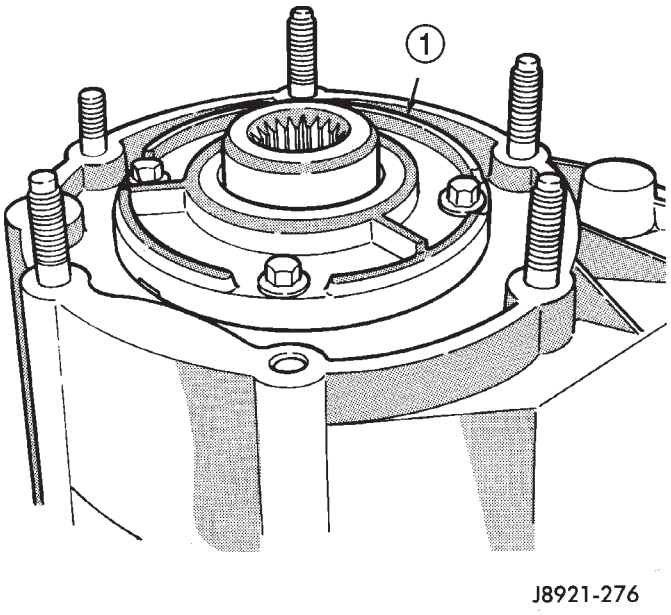

Fig. 71 Installing Front Bearing Retainer

1 - FRONT BEARING RETAINER

TRANSFER CASE - NV242 (Continued)

SHIFT FORKS AND MAINSHAFT

(1) Install new sector shaft O-ring and bushing (Fig. 72).

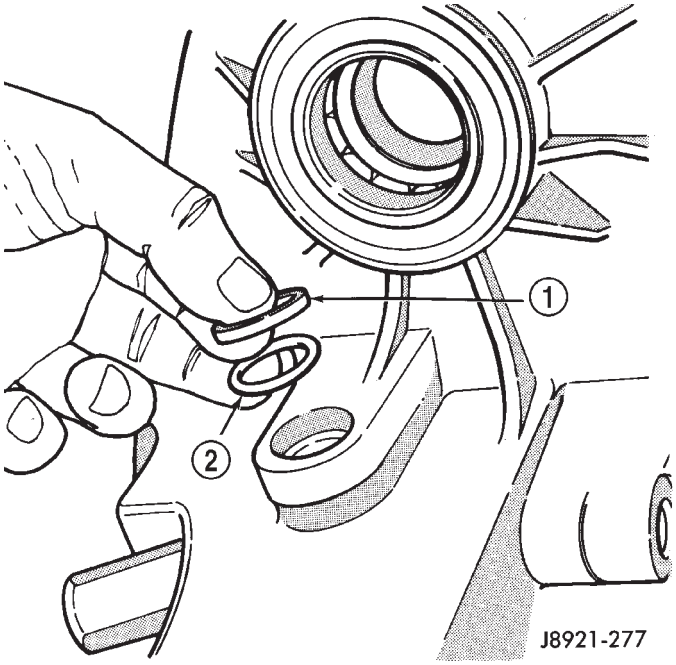

Fig. 72 Sector O-Ring And Bushing Installation

1 - SECTOR BUSHING
2 - O-RING

(2) Install shift sector.

(3) Install new pads on low range fork, if necessary, (Fig. 73).

(4) Assemble low range fork and hub (Fig. 73).

(5) Position low range fork and hub in case. Be sure low range fork pin is engaged in shift sector slot (Fig. 74).

(6) Install first mainshaft bearing spacer on mainshaft (Fig. 75).

(7) Install bearing rollers on mainshaft (Fig. 75). **Coat bearing rollers with generous quantity of petroleum jelly to hold them in place.**

(8) Install remaining bearing spacer on mainshaft (Fig. 75). Do not displace any bearings while installing spacer.

(9) Install differential (Fig. 76). **Do not displace mainshaft bearings when installing differential.**

(10) Install differential snap-ring (Fig. 77).

(11) Install intermediate clutch shaft (Fig. 78).

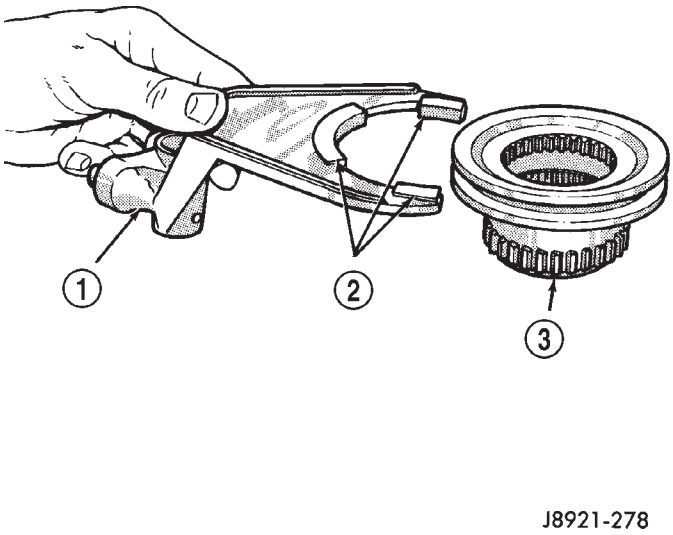

Fig. 73 Assembling Low Range Fork And Hub

1 - LOW RANGE FORK
2 - PADS
3 - HUB

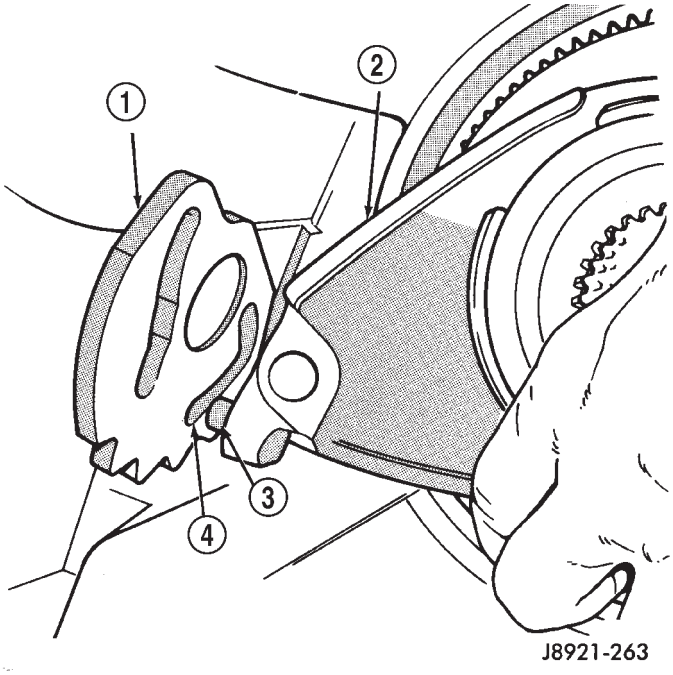

Fig. 74 Positioning Low Range Fork

1 - SHIFT SECTOR
2 - LOW RANGE FORK
3 - PIN
4 - SLOT

TRANSFER CASE - NV242 (Continued)

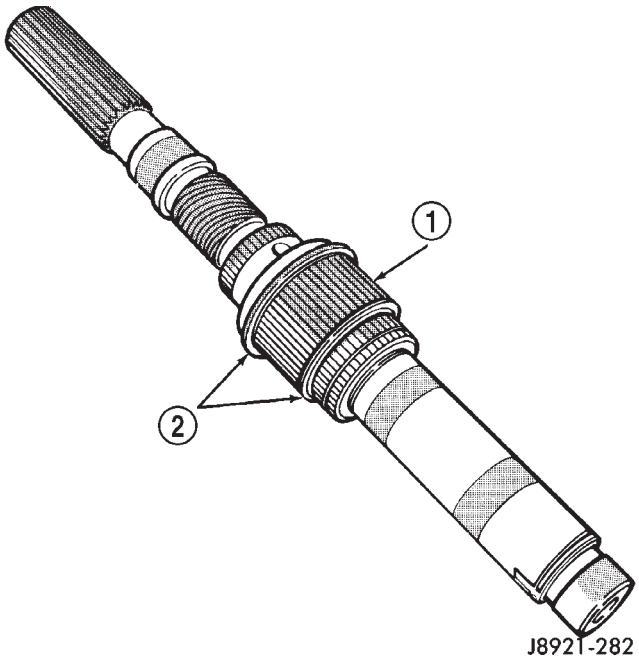

Fig. 75 Installing Mainshaft Bearing Rollers and Spacers

1 - MAINSHAFT BEARING ROLLERS
2 - BEARING SPACERS

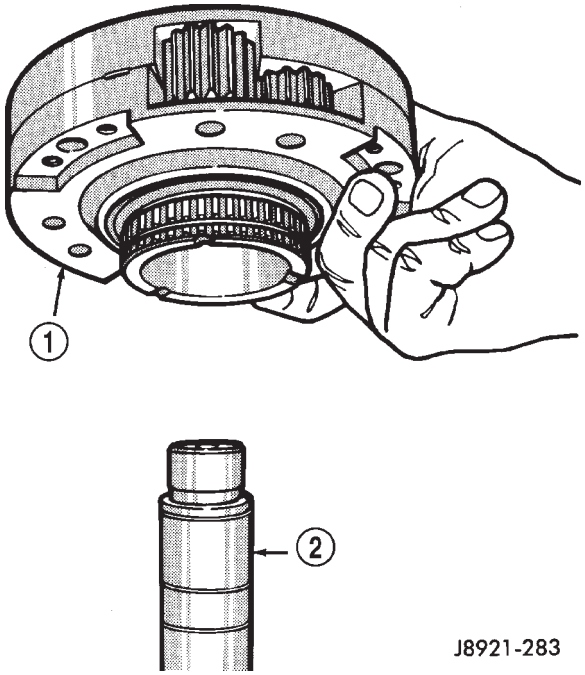

Fig. 76 Differential Installation

1 - DIFFERENTIAL
2 - MAINSHAFT

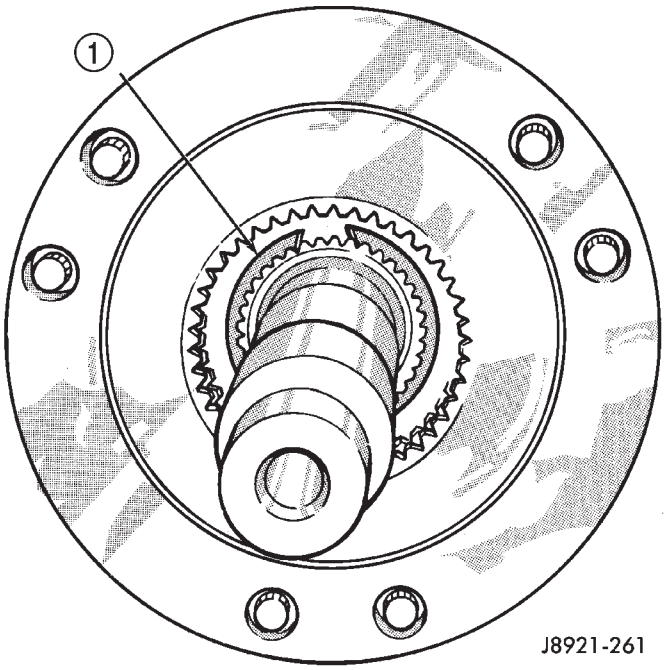

Fig. 77 Installing Differential Snap-Ring

1 - DIFFERENTIAL SNAP-RING

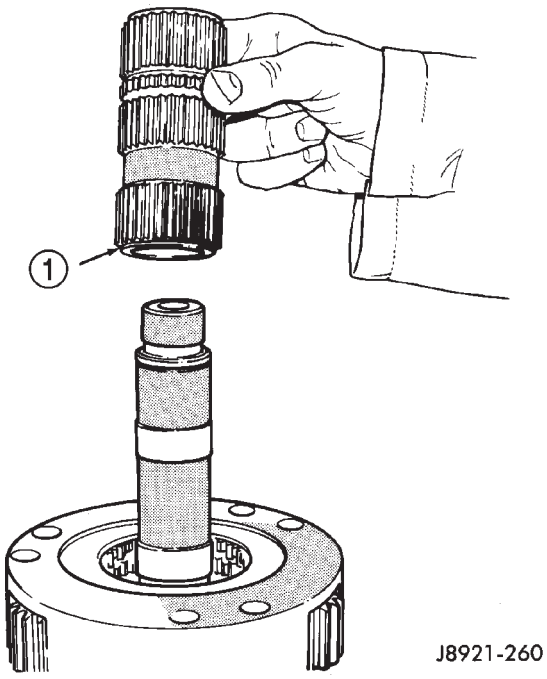

Fig. 78 Installing Intermediate Clutch Shaft

1 - INTERMEDIATE CLUTCH SHAFT

TRANSFER CASE - NV242 (Continued)

(12) Install clutch shaft thrust washer (Fig. 79).

(13) Install clutch shaft snap-ring (Fig. 80).

(14) Inspect mode fork assembly (Fig. 81). Replace pads and bushing if necessary. Replace fork tube if bushings inside tube are worn or damaged. Also check springs and slider bracket (Fig. 81). Replace worn, damaged components.

Fig. 79 Installing Clutch Shaft Thrust Washer

1 - CLUTCH SHAFT THRUST RING

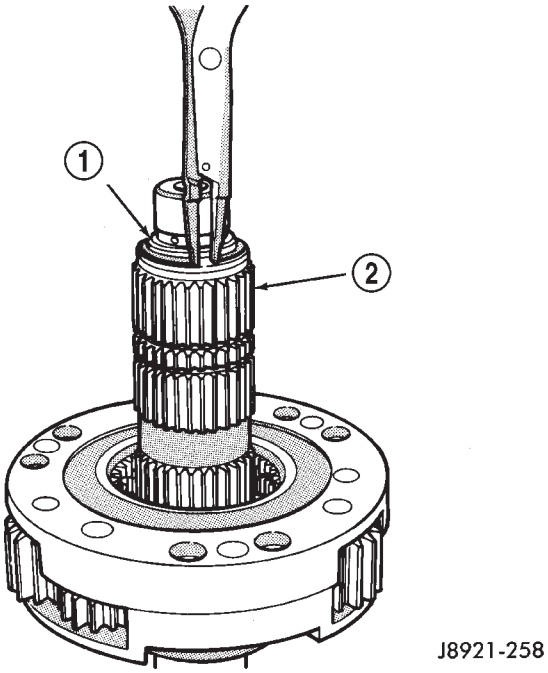

Fig. 80 Installing Clutch Shaft Snap-Ring

1 - SNAP-RING
2 - INTERMEDIATE CLUTCH SHAFT

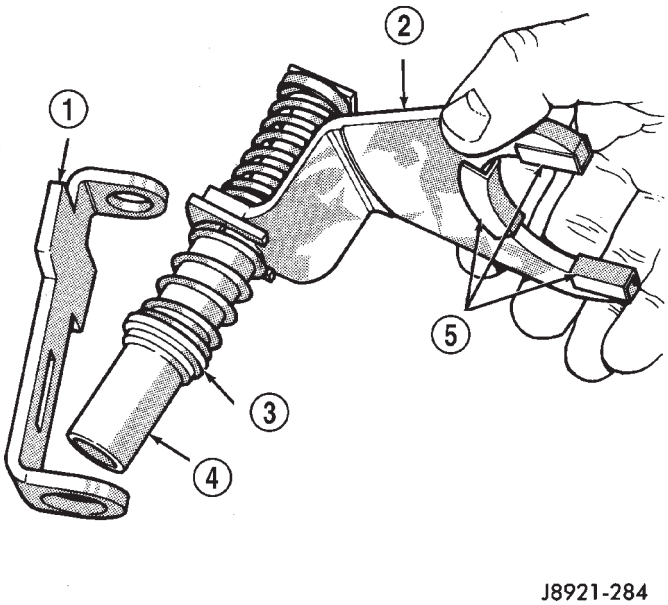

Fig. 81 Mode Fork Assembly Inspection

1 - SLIDER
2 - MODE FORK
3 - BUSHING/SPRING
4 - TUBE
5 - PADS

(15) Install mode sleeve in mode fork (Fig. 82). Then install assembled sleeve and fork on mainshaft. Be sure mode sleeve splines are engaged in differential splines.

(16) Install mode fork and mainshaft assembly in case (Fig. 83). Rotate mainshaft slightly to engage shaft with low range gears.

(17) Rotate mode fork pin into shift sector slot.

(18) Install shift rail (Fig. 84). **Be sure rail is seated in both shift forks.**

(19) Rotate shift sector to align lockpin hole in low range fork with access hole in case.

TRANSFER CASE - NV242 (Continued)

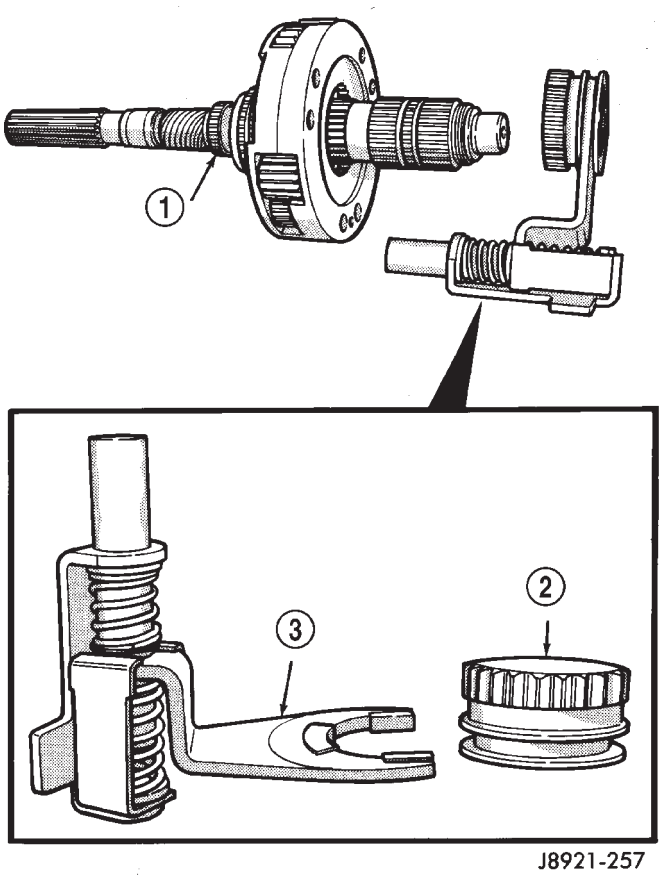

Fig. 82 Installing Mode Fork And Sleeve

1 - MAINSHAFT
2 - SLEEVE
3 - MODE FORK ASSEMBLY

(20) Insert an easy-out in range fork lockpin to hold it securely for installation (Fig. 85). **Lockpin is slightly tapered on one end. Insert tapered end into fork and rail.**

(21) Insert lockpin through access hole and into shift fork (Fig. 85). Then remove easy-out and seat the pin with pin punch.

(22) Install plug in lockpin access hole.

(23) Install detent plunger, detent spring and detent plug in case (Fig. 86).

FRONT OUTPUT SHAFT AND DRIVE CHAIN

(1) Install front output shaft (Fig. 87).

(2) Install drive chain (Fig. 87). Engage chain with front output shaft sprocket teeth.

(3) Install drive sprocket (Fig. 87). Engage drive sprocket teeth with chain. Then engage sprocket splines with mainshaft splines.

(4) Install drive sprocket snap-ring (Fig. 88).

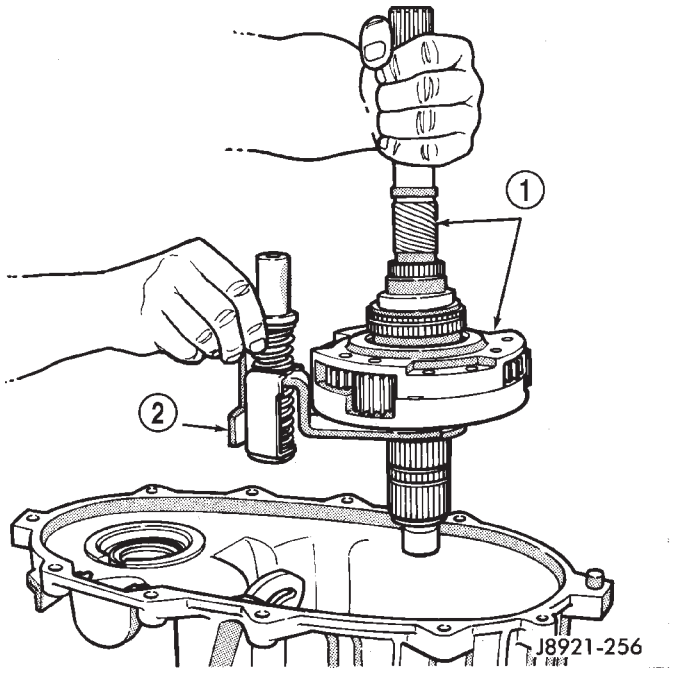

Fig. 83 Assembled Mainshaft And Mode Fork Installation

1 - MAINSHAFT ASSEMBLY
2 - MODE FORK

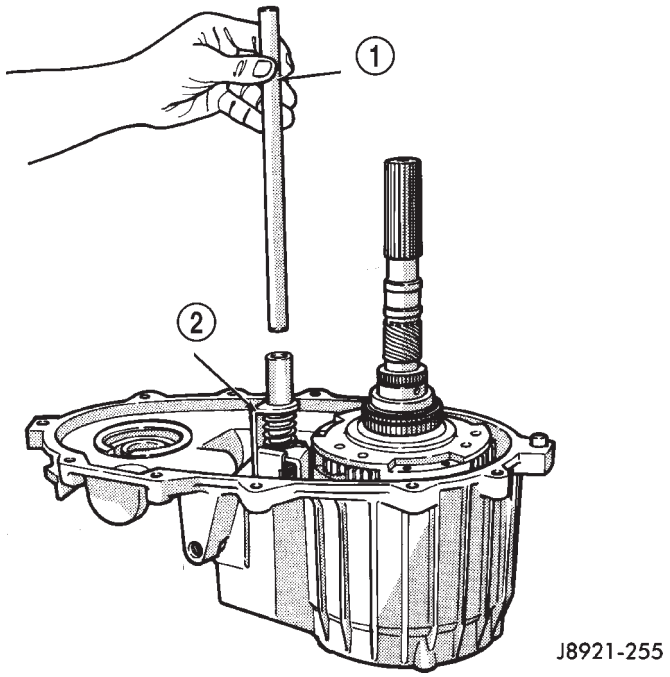

Fig. 84 Shift Rail Installation

1 - SHIFT RAIL
2 - MODE FORK

TRANSFER CASE - NV242 (Continued)

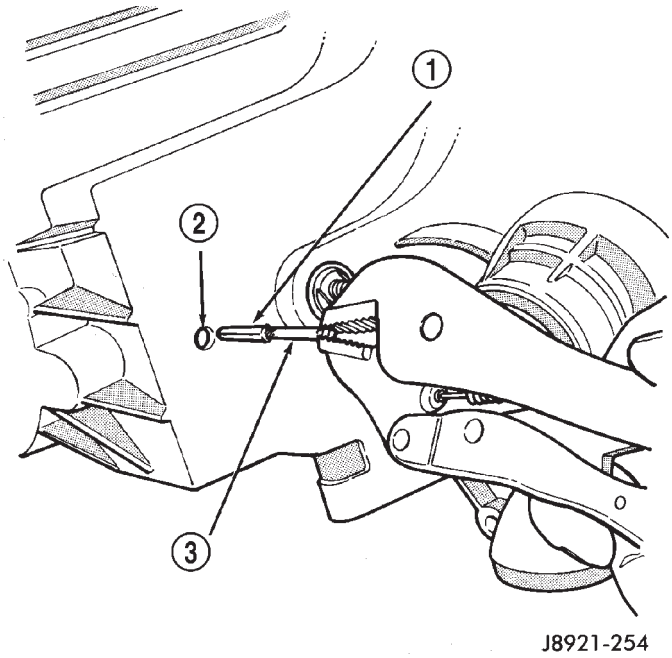

Fig. 85 Installing Low Range Fork Lockpin

1 - LOW RANGE FORK LOCK PIN
2 - ACCESS HOLE
3 - EASY-OUT

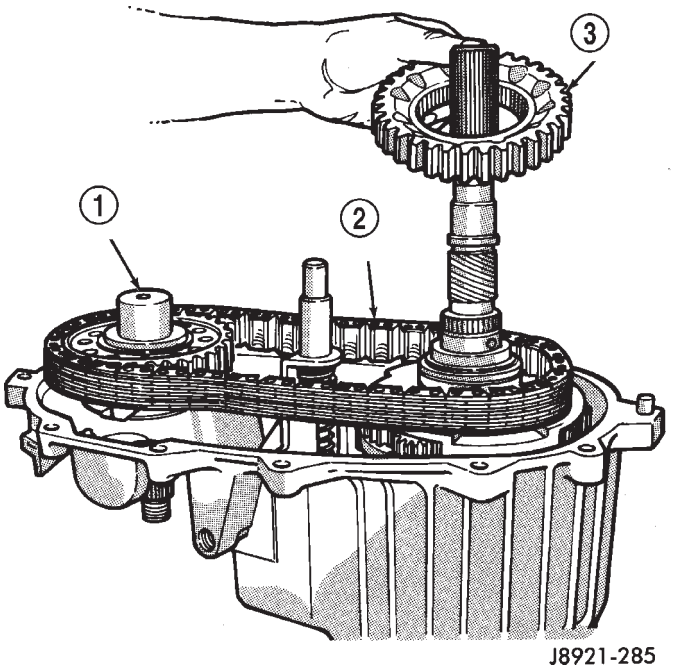

Fig. 87 Drive Chain And Sprocket Installation

1 - FRONT OUTPUT SHAFT
2 - DRIVE CHAIN
3 - DRIVE SPROCKET

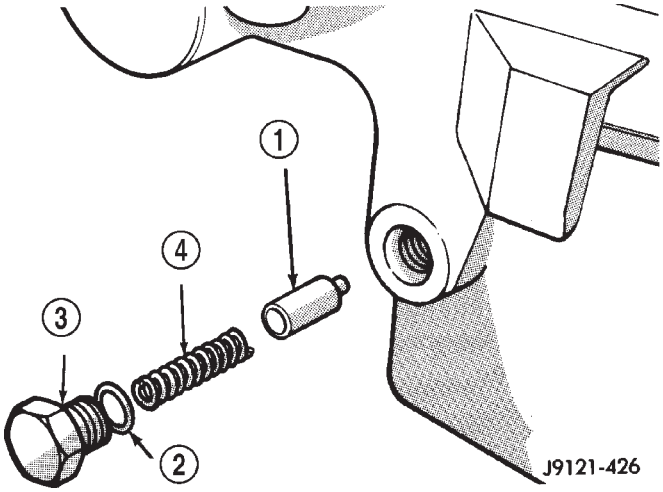

Fig. 86 Detent Pin, Spring And Plug Installation

1 - PLUNGER
2 - O-RING
3 - PLUG
4 - SPRING

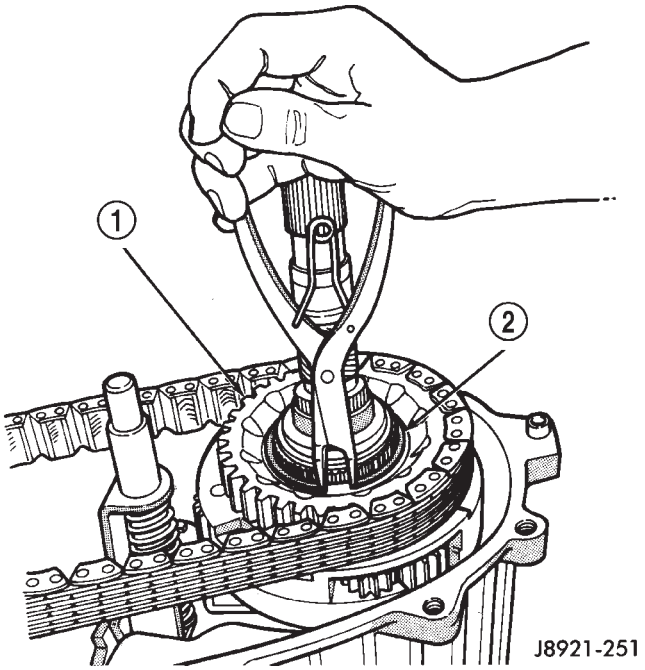

Fig. 88 Drive Sprocket Snap-Ring Installation

1 - DRIVE SPROCKET
2 - DRIVE SPROCKET SNAP-RING

TRANSFER CASE - NV242 (Continued)

OIL PUMP AND REAR CASE

(1) Insert oil pickup tube in oil pump and attach oil screen and connector hose to pickup tube. Then install assembled pump, tube and screen in rear case (Fig. 89). Be sure screen is seated in case slot as shown.

(2) Install magnet in front case pocket (Fig. 90).

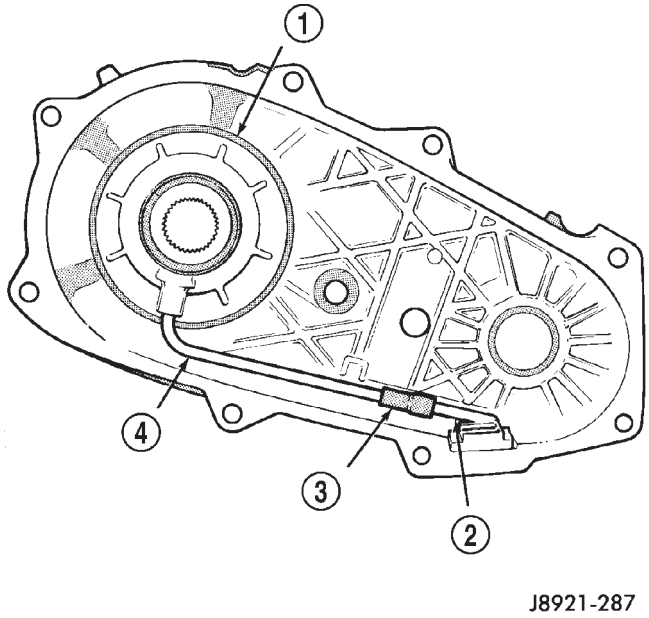

Fig. 89 Oil Screen And Pickup Tube Installation

1 - OIL PUMP
2 - OIL SCREEN
3 - CONNECTOR
4 - PICKUP TUBE

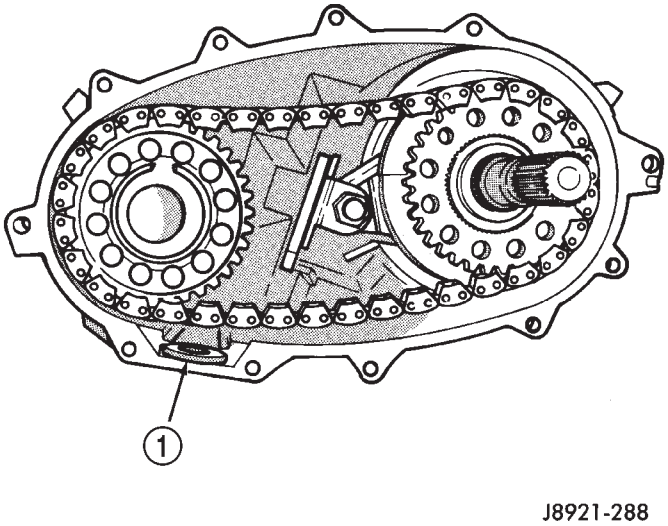

Fig. 90 Installing Case Magnet

1 - MAGNET

(3) Apply 3 mm (1/8 in.) wide bead of Mopar® gasket maker or silicone adhesive sealer to seal surface of front case.

(4) Align and install rear case on front case. Be sure case locating dowels are in place and that mainshaft splines are engaged in oil pump inner gear.

(5) Install and tighten front case-to-rear case bolts to 41 N·m (30 ft. lbs.) torque. **Be sure to install a washer under each bolt used at case dowel locations.**

REAR RETAINER - NV242LD

(1) Remove rear bearing in retainer using Installer 8128 and Handle C-4171.

(2) Install rear bearing in retainer with Tools C-4171 and 5064 (Fig. 91).

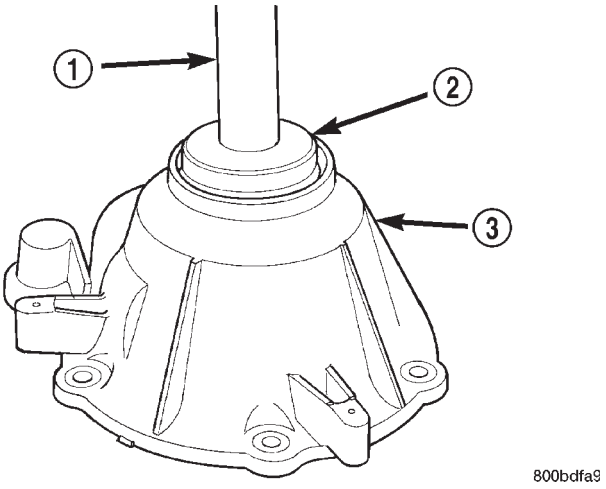

Fig. 91 Installing Rear Bearing In Retainer

1 - SPECIAL TOOL C-4171
2 - SPECIAL TOOL 5064
3 - REAR RETAINER

TRANSFER CASE - NV242 (Continued)

(3) Install rear bearing O.D. retaining ring with snap-ring pliers (Fig. 92). Be sure retaining ring is fully seated in retainer groove.

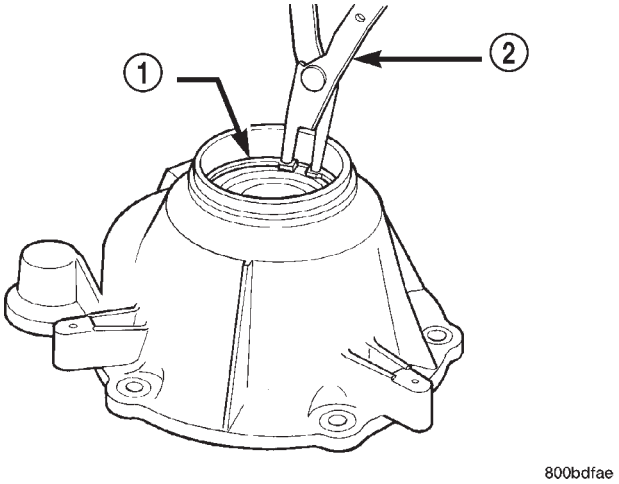

Fig. 92 Rear Bearing Retaining Ring Installation

1 - REAR BEARING O.D. RETAINING RING
2 - SNAP-RING PLIERS

(4) Apply bead of Mopar® Sealer P/N 82300234, or Loctite™ Ultra Gray, to mating surface of rear retainer. Sealer bead should be a maximum of 3/16 in.

(5) Install rear retainer on rear case. Tighten retainer bolts to 20-27 N·m (15-20 ft. lbs.) torque.

(6) Install rear bearing I.D. retaining ring and spacer on output shaft.

(7) Apply liberal quantity of petroleum jelly to new rear seal and to output shaft. Petroleum jelly is needed to protect seal lips during installation.

(8) Slide seal onto Seal Protector 6992 (Fig. 93). Slide seal protector and seal onto output shaft.

(9) Slide Installer C-4076-B onto seal protector with the recessed side of the tool toward the seal. Drive seal into rear bearing retainer with Installer C-4076-B and Handle MD-998323 (Fig. 94).

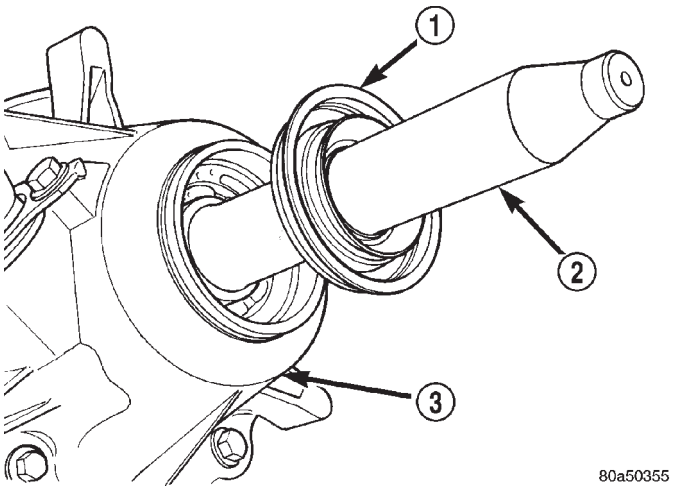

Fig. 93 Output Shaft Seal and Protector

1 - OUTPUT SHAFT SEAL
2 - SPECIAL TOOL 6992
3 - TRANSFER CASE

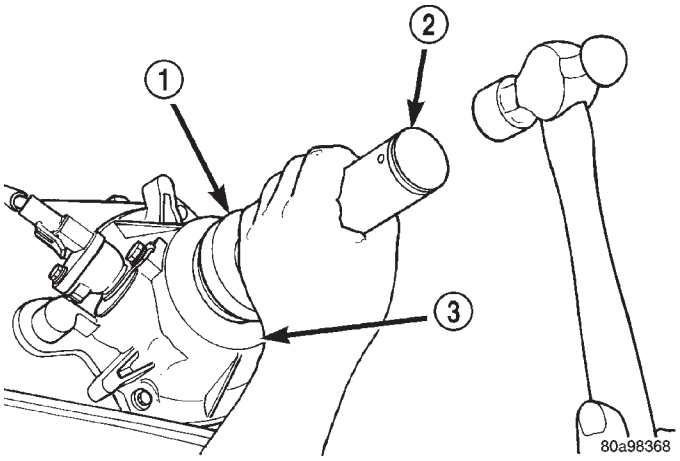

Fig. 94 Rear Seal Installation - Typical

1 - SPECIAL TOOL C-4076-B
2 - SPECIAL TOOL MD998323
3 - TRANSFER CASE

TRANSFER CASE - NV242 (Continued)

(10) Install rear slinger with Installer 8408.

(11) Install boot on output shaft slinger and crimp retaining clamp with tool C-4975-A (Fig. 95).

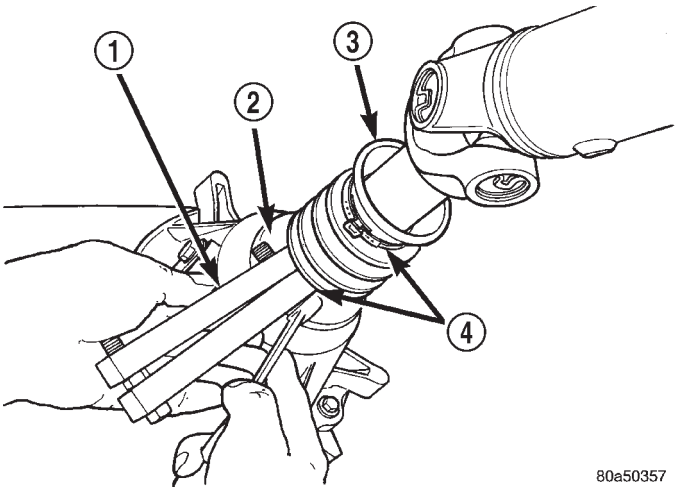

Fig. 95 Slinger Boot Installation

1 - SPECIAL TOOL C-4975-A
2 - SLINGER
3 - BOOT
4 - CLAMP

NV242HD REAR RETAINER

(1) Install rear bearing O.D. retaining ring with snap-ring pliers (Fig. 96). Be sure retaining ring is fully seated in retainer groove.

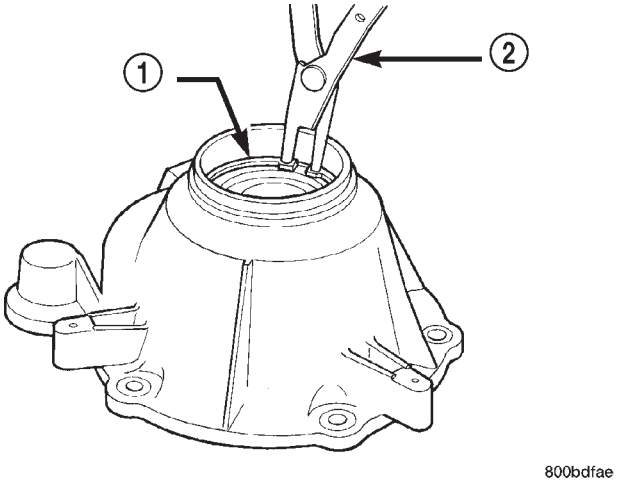

Fig. 96 Rear Bearing Retaining Ring Installation

1 - REAR BEARING O.D. RETAINING RING
2 - SNAP-RING PLIERS

(2) Apply bead of Mopar® Sealer P/N 82300234, or Loctite™ Ultra Gray, to mating surface of rear retainer. Sealer bead should be a maximum of 3/16 in.

(3) Install rear retainer on rear case. Tighten retainer bolts to 20-27 N·m (15-20 ft. lbs.) torque.

(4) Install new output shaft bearing snap-ring (Fig. 97). Lift mainshaft slightly to seat snap-ring in shaft groove, if necessary.

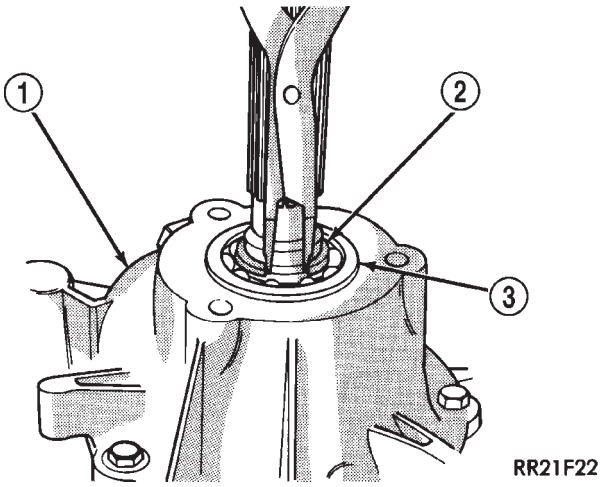

Fig. 97 Install Output Bearing Snap-ring

1 - REAR RETAINER
2 - SNAP-RING
3 - REAR BEARING

(5) Apply 3 mm (1/8 in.) wide bead of Mopar® gasket maker or silicone adhesive sealer to mounting surface of extension housing. Allow sealer to set-up slightly before proceeding.

(6) Install extension housing on rear retainer.

(7) Install extension housing bolts and tighten to 35-46 N·m (26-34 ft. lbs.).

COMPANION FLANGE

(1) Lubricate companion flange hub with transmission fluid and install flange on front shaft.

(2) Install new seal washer on front shaft.

(3) Install flange on front shaft and tighten nut to 122-176 N·m (90-130 ft. lbs.).

INSTALLATION

(1) Mount transfer case on a transmission jack.

(2) Secure transfer case to jack with chains.

(3) Position transfer case under vehicle.

(4) Align transfer case and transmission shafts and install transfer case on transmission.

(5) Install and tighten transfer case attaching nuts to 35 N·m (26 ft. lbs.) torque (Fig. 4).

(6) Align and connect propeller shafts. (Refer to 3 - DIFFERENTIAL & DRIVELINE/PROPELLER SHAFT/PROPELLER SHAFT - INSTALLATION)

(7) Fill transfer case with correct fluid. Check transmission fluid level. Correct as necessary.

(8) Install rear crossmember and skid plate, if equipped. Tighten crossmember bolts to 41 N·m (30 ft. lbs.) torque.

(9) Remove transmission jack and support stand.

(10) Connect shift rod to transfer case range lever.

(11) Adjust transfer case shift cable.

(12) Lower vehicle and verify transfer case shift operation.

SPECIFICATIONS

TRANSFER CASE - NV242

TORQUE SPECIFICATIONS

DESCRIPTION	N·m	Ft. Lbs.	In. Lbs.
Plug, Detent	16-24	11.8-17.7	-
Bolt, Diff. Case	17-27	12.5-19.9	-
Plug, Drain/Fill	20-25	14.7-18.4	-
Bolt, Front Brg. Retainer	16-27	11.8-19.9	-
Bolt, Case Half	35-46	25.8-33.9	-
Nut, Front Yoke	122-176	90-130	-
Screw, Oil Pump	1.2-1.8	-	12-15
Nut, Range Lever	27-34	19.9-25	-
Bolt, Rear Retainer	35-46	25.8-33.9	-
Nuts, Mounting	35	25.8	-
Bolts, U-Joint	19	14	-

SPECIAL TOOLS

TRANSFER CASE - NV242

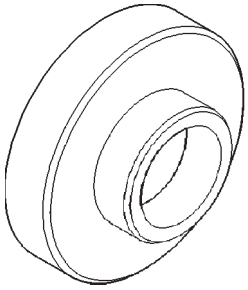

Installer, Seal - C-4076-B

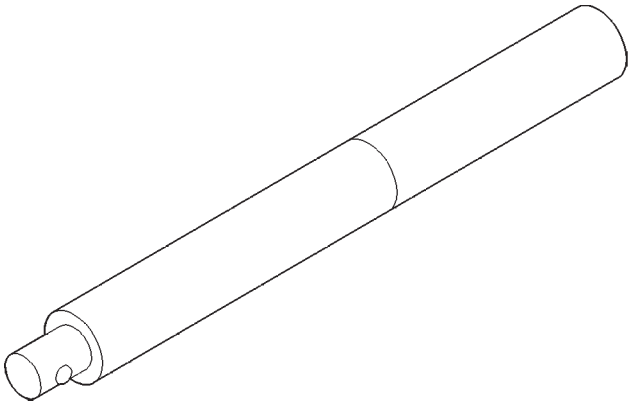

Handle, Universal - C-4171

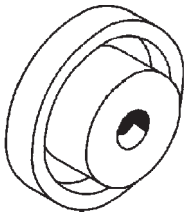

Remover, Bearing - C-4210

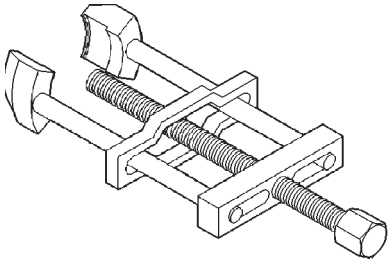

Puller, Slinger - MD-998056-A

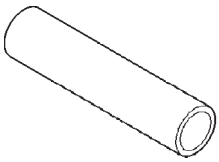

Installer - MD-998323

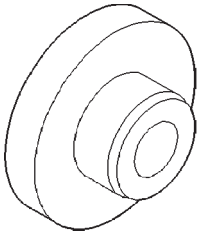

Installer, Bearing - 5064

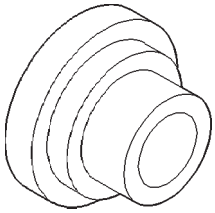

Installer, Bearing - 8128

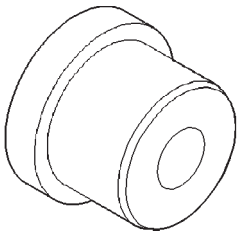

Installer, Bearing - 5066

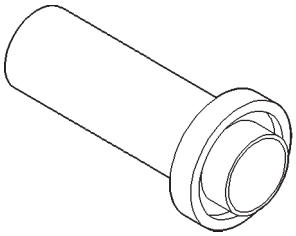

Installer, Seal - 6952-A

SPECIAL TOOLS (Continued)

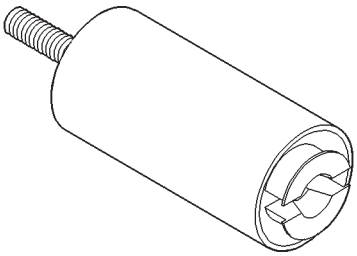

Remover, Bearing - L-4454

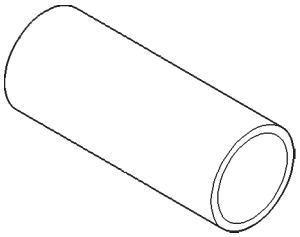

Cup - 8148

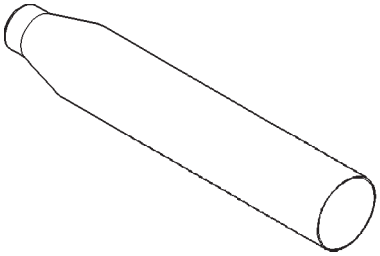

Protector, Seal - 6992

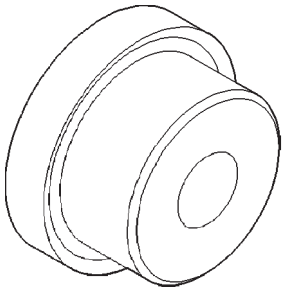

Installer, Input Gear Bearing - 7829-A

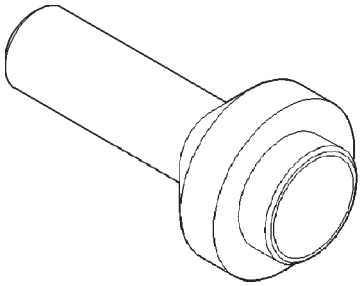

Installer, Seal - 7884

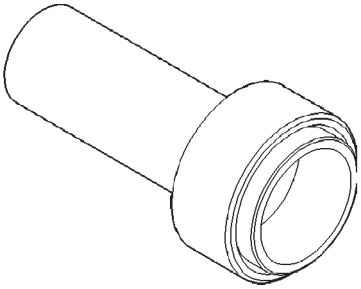

Installer, Pump Housing Seal - 7888

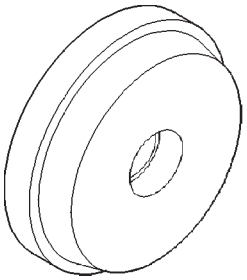

Installer, Bearing - 8033-A

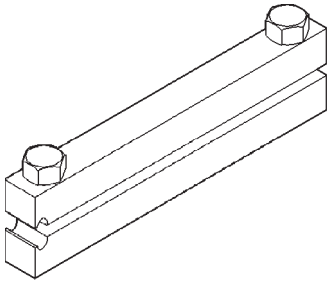

Installer, Boot Clamp - C-4975-A

FRONT OUTPUT SHAFT SEAL

REMOVAL

(1) Raise vehicle.

(2) Remove front propeller shaft. (Refer to 3 - DIFFERENTIAL & DRIVELINE/PROPELLER SHAFT/ PROPELLER SHAFT - REMOVAL)

(3) Remove front output shaft companion flange.

(4) Remove seal from front case with pry tool (Fig. 98).

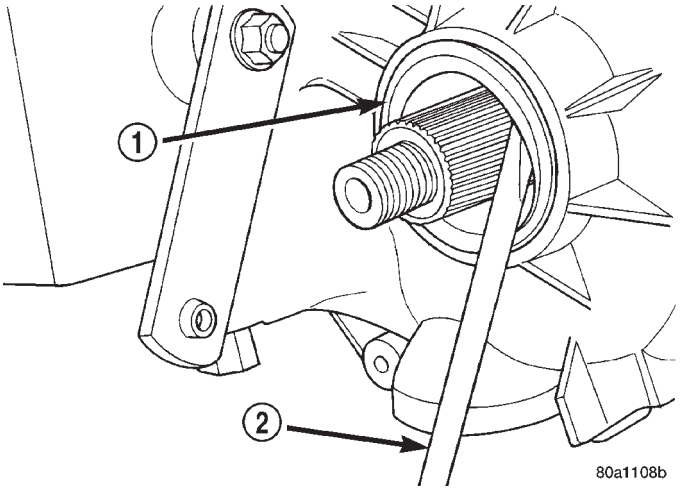

Fig. 98 Remove Front Output Shaft Seal

1 - OUTPUT SHAFT SEAL
2 - PRYBAR

INSTALLATION

(1) Install new front output seal in front case with Installer Tool 6952-A as follows:

(a) Place new seal on tool. Garter spring on seal goes toward interior of case.

(b) Start seal in bore with light taps from hammer (Fig. 99). Once seal is started, continue tapping seal into bore until installer tool seats against case.

(2) Install companion flange and tighten nut to 122-176 (90-130 ft. lbs.) torque.

(3) Install front propeller shaft. (Refer to 3 - DIFFERENTIAL & DRIVELINE/PROPELLER SHAFT/ PROPELLER SHAFT - INSTALLATION)

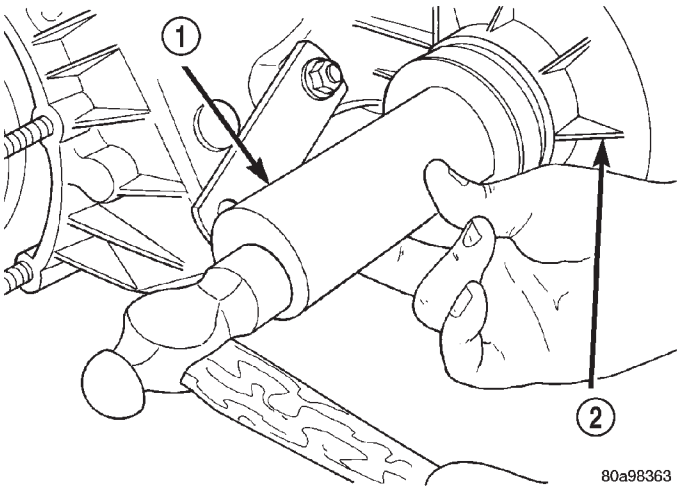

Fig. 99 Front Output Seal Installation

1 - INSTALLER 6952-A
2 - TRANSFER CASE

REAR RETAINER BUSHING AND SEAL - NV242HD

REMOVAL

(1) Raise vehicle.

(2) Remove rear propeller shaft. (Refer to 3 - DIFFERENTIAL & DRIVELINE/PROPELLER SHAFT/ PROPELLER SHAFT - REMOVAL)

(3) Using a suitable pry tool or slide-hammer mounted screw, remove the rear retainer seal.

(4) Using Remover 6957, remove bushing from rear retainer (Fig. 100).

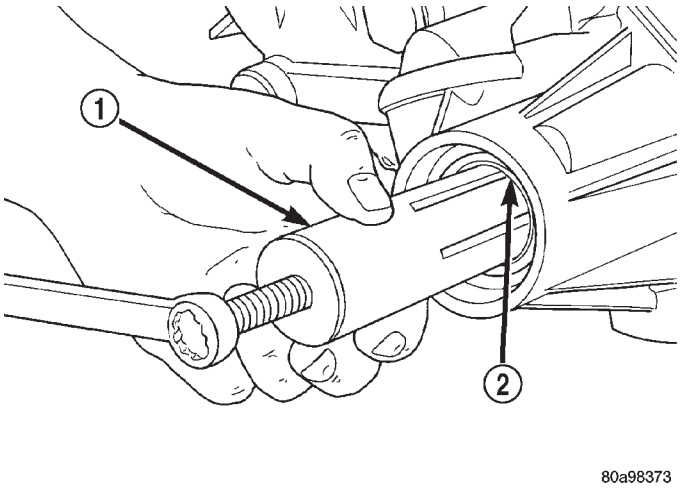

Fig. 100 Rear Retainer Bushing Removal

1 - REMOVER 6957
2 - REAR RETAINER BUSHING

REAR RETAINER BUSHING AND SEAL - NV242HD (Continued)

INSTALLATION

(1) Clean fluid residue from sealing surface and inspect for defects.

(2) Position replacement bushing in rear retainer with fluid port in bushing aligned with slot in retainer.

(3) Using Installer 8160, drive bushing into retainer until installer seats against case (Fig. 101).

(4) Using Installer C-3995-A, install seal in rear retainer (Fig. 102).

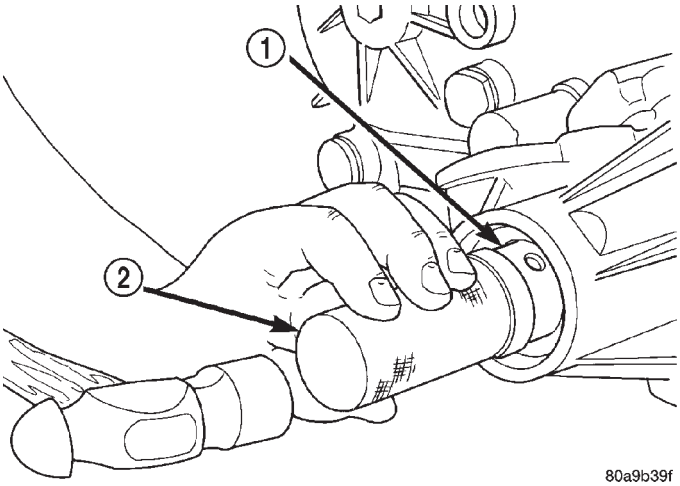

Fig. 101 Rear Retainer Bushing Install

1 - REAR RETAINER BUSHING
2 - INSTALLER 8160

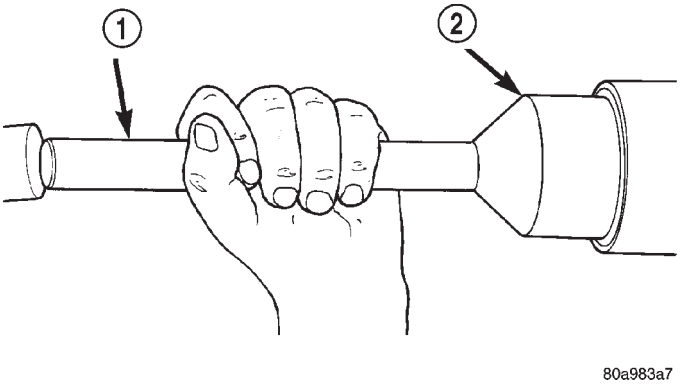

Fig. 102 Install Rear Retainer Seal

1 - SPECIAL TOOL C-4171
2 - SPECIAL TOOL C-3995-A

(5) Install the rear propeller shaft. (Refer to 3 - DIFFERENTIAL & DRIVELINE/PROPELLER SHAFT/PROPELLER SHAFT - INSTALLATION)

(6) Verify proper fluid level.

(7) Lower vehicle.

SHIFT CABLE

REMOVAL

(1) Shift transfer case into NEUTRAL.

(2) Raise vehicle.

(3) Disconnect the shift cable eyelet from the transfer case shift lever (Fig. 103).

(4) Remove shift cable from the cable support bracket.

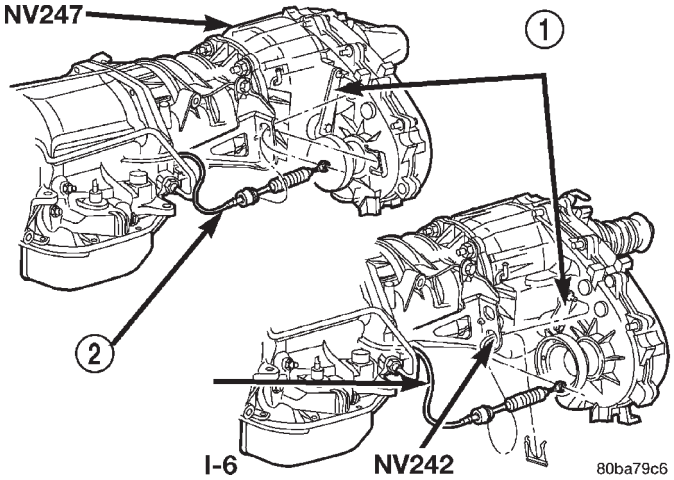

Fig. 103 Transfer Case Shift Cable at Transfer Case

1 - TRANSFER CASE SHIFT LEVER
2 - TRANSFER CASE SHIFT CABLE

(5) Lower vehicle.

(6) Remove any necessary console parts for access to shift lever assembly and shift cable.

(7) Disconnect cable at shift lever and shifter assembly bracket (Fig. 104).

(8) Remove the nuts holding the shift cable seal plate to the floor pan (Fig. 105).

(9) Pull cable through floor panel opening.

(10) Remove transfer case shift cable from vehicle.

INSTALLATION

(1) Route cable through hole in floor pan.

(2) Install seal plate to studs in floor pan.

(3) Install nuts to hold seal plate to floor pan (Fig. 105). Tighten nuts to 7 N·m (65 in.lbs.).

(4) Install the transfer case shift cable to the shifter assembly bracket. Seat cable in bracket and install clip (Fig. 104).

(5) Verify the transfer case shift lever (at console) is in the NEUTRAL position.

(6) Snap the cable onto the shift lever pin (Fig. 104).

SHIFT CABLE (Continued)

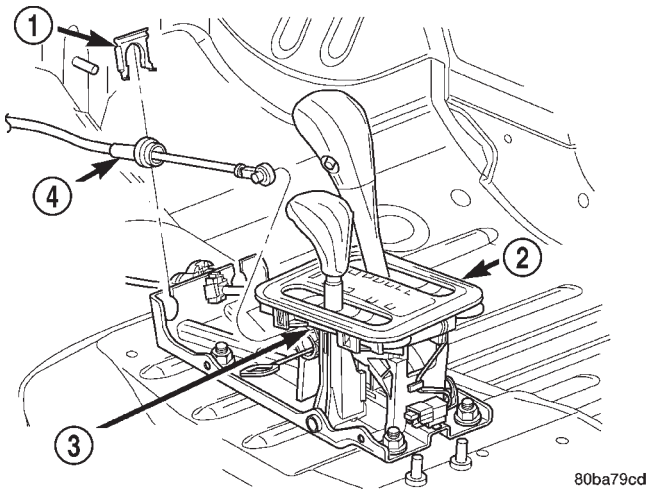

Fig. 104 Transfer Case Shift Cable at Shifter

1 - CLIP
2 - SHIFTER
3 - TRANSFER CASE SHIFT LEVER PIN
4 - TRANSFER CASE SHIFT CABLE

(7) Raise the vehicle.

(8) Install the shift cable to the shift cable support bracket and install clip (Fig. 103).

(9) Verify that the transfer case is still in the NEUTRAL position.

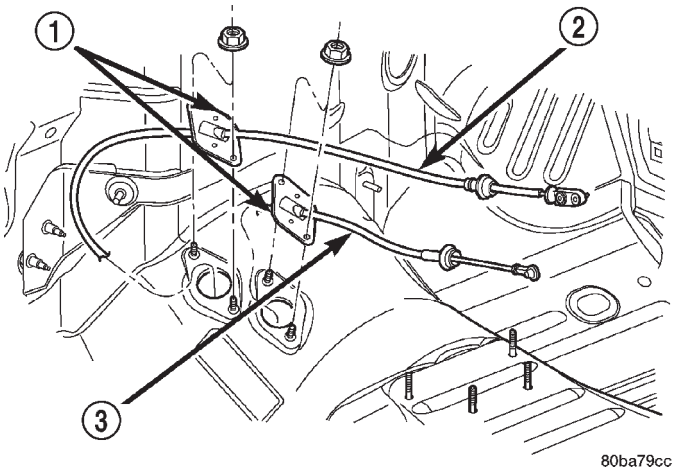

Fig. 105 Shift Cables at Floor Pan

1 - SEAL PLATES
2 - TRANSMISSION SHIFT CABLE
3 - TRANSFER CASE SHIFT CABLE

(10) Snap the shift cable onto the transfer case shift lever (Fig. 103).

(11) Lower vehicle.

(12) Verify correct transfer case operation in all ranges.

(13) Install any console parts removed for access to transfer case shift cable.

TRANSFER CASE - NV247

TABLE OF CONTENTS

	page
TRANSFER CASE - NV247	
DESCRIPTION	38
OPERATION	38
DIAGNOSIS AND TESTING	39
TRANSFER CASE - NV247	39
REMOVAL	40
DISASSEMBLY	40
CLEANING	47
INSPECTION	47
ASSEMBLY	48
INSTALLATION	58
SPECIFICATIONS	59
SPECIAL TOOLS	60
FRONT OUTPUT SHAFT SEAL	
REMOVAL	61
INSTALLATION	61
REAR RETAINER BUSHING AND SEAL	
REMOVAL	62
INSTALLATION	62
SHIFT CABLE	
REMOVAL	63
INSTALLATION	63

TRANSFER CASE - NV247

DESCRIPTION

The NV247 (Fig. 1) is an on-demand 4-wheel drive transfer case with two operating ranges and a neutral position. Operating ranges are 4-high and 4-low. The 4-low range is used for extra pulling power in off-road situations.

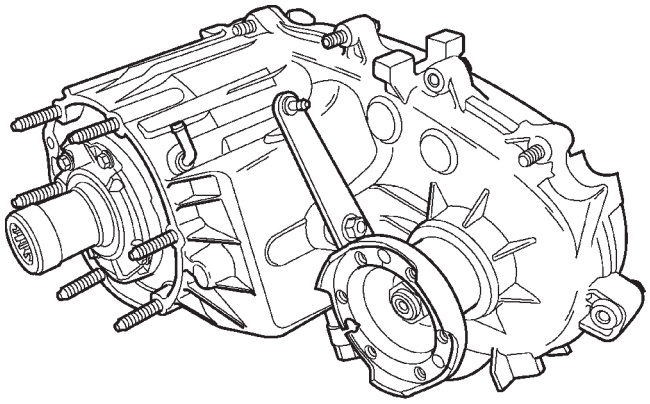

80ba7a31

Fig. 1 NV247 Transfer Case

TRANSFER CASE IDENTIFICATION

A circular I.D. tag is attached to the rear case of each NV247 transfer case (Fig. 2). The tag indicates the following information:

- Model number
- Serial number
- Assembly number
- Gear ratio
- Location of manufacture

The transfer case serial number also represents the date of build.

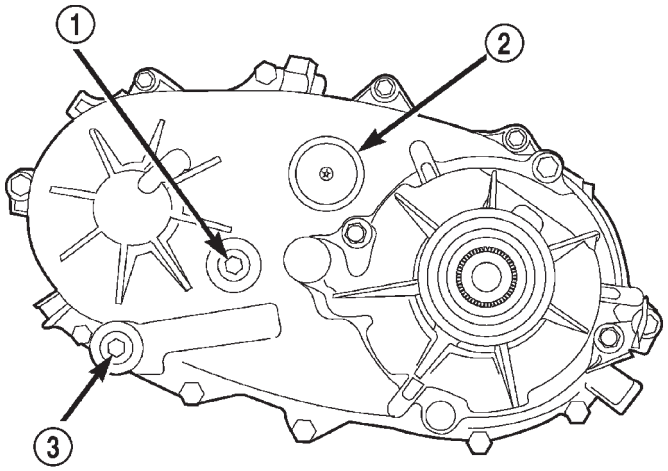

80ba7a32

Fig. 2 Transfer Case I.D. Tag

1 - FILL PLUG
2 - I.D. TAG
3 - DRAIN PLUG

OPERATION

Under normal driving conditions, the system operates conventionally, and the majority of available torque is applied to the rear wheels. However, when front-to-rear wheel speed variations exist, the progressive differential transfers torque to the axle with the better traction, thus minimizing wheel spin and maximizing control.

The key to this design is a progressive coupling (Fig. 3), which is supplied with pressurized oil by a gerotor style pump. The pump rotor and case are driven by the front and rear driveshafts respectively,

TRANSFER CASE - NV247 (Continued)

and deliver pressurized oil flow to the coupling in proportion to their speed difference. The progressive coupling contains a multi-disc clutch pack that is alternately splined to the front and rear driveshafts, and controls torque variation between the front and rear driveshafts as dictated by the pump.

A set of orifices and valves control the speed-differential starting point and rate of torque transfer rise in the clutch. This allows the system to disregard the normal speed differences between axles that result from variations in front-to-rear loading and typical cornering.

Transfer case operating ranges are selected with a floor mounted shift lever. The shift lever is connected to the transfer case range lever by an adjustable cable. Range positions are marked on the shifter bezel plate.

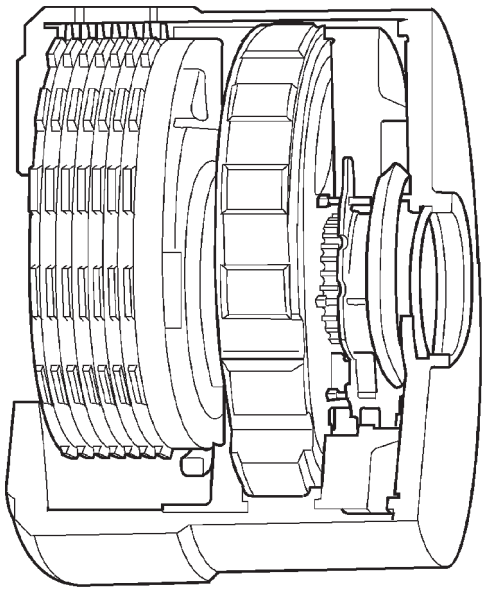

80ba7a55

Fig. 3 Progressive Coupling

DIAGNOSIS AND TESTING - TRANSFER CASE - NV247

CONDITION	POSSIBLE CAUSE	CORRECTION
TRANSFER CASE DIFFICULT TO SHIFT OR WILL NOT SHIFT INTO DESIRED RANGE	1. Vehicle speed too great to permit shifting	1. Reduce speed to 3-4 km/h (2-3 mph) before attempting to shift
	2. Transfer case external shift cable binding	2. Lubricate, repair or replace cable, or thighten loose components as necessary
	3. Insufficient or incorrect lubricant	3. Drain and refill to edge of fill hole with correct lubricant
	4. Internal components binding, worn, or damaged	4. Disassemble unit and replace worn or damaged components as necessary
TRANSFER CASE NOISY IN ALL MODES	1. Insufficient or incorrect lubricant	1. Drain and refill to edge of fill hole with correct lubricant. **If unit is still noisy after drain and refill, disassembly and inspection may be required to locate source of noise**
NOISY IN—OR JUMPS OUT OF 4WD LOW RANGE	1. Transfer case not completely engaged in 4WD LOW (possibly from shift to 4L while rolling)	1. Stop vehicle, shift transfer case to neutral, then shift back to 4WD LOW
	2. Shift linkage loose, binding, or is misadjusted	2. Tighten, lubricate, or repair linkage as necessary. Adjust linkage if necessary
	3. Range fork cracked, inserts worn, or fork is binding on shift rail	3. Disassemble unit and repair as necessary
	4. Annulus gear or lockplate worn or damaged	4. Disassemble unit and repair as necessary
LUBRICANT LEAKING FROM OUTPUT SHAFT SEALS OR FROM VENT	1. Transfer case over filled	1. Drain to correct level
	2. Vent closed or restricted	2. Clear or replace vent if necessary
	3. Output shaft seals damaged or installed correctly	3. Replace seals. Be sure seal lip faces interior of case when installed. Also be sure yoke seal surfaces are not scored or nicked. Remove scores and nicks with fine sandpaper or replace yoke(s) if necessary.

TRANSFER CASE - NV247 (Continued)

REMOVAL

(1) Shift transfer case into NEUTRAL.
(2) Raise vehicle.
(3) Remove transfer case drain plug and drain transfer case lubricant.
(4) Mark front and rear propeller shaft yokes for alignment reference.
(5) Support transmission with jack stand.
(6) Remove rear crossmember and skid plate, if equipped (Fig. 4).

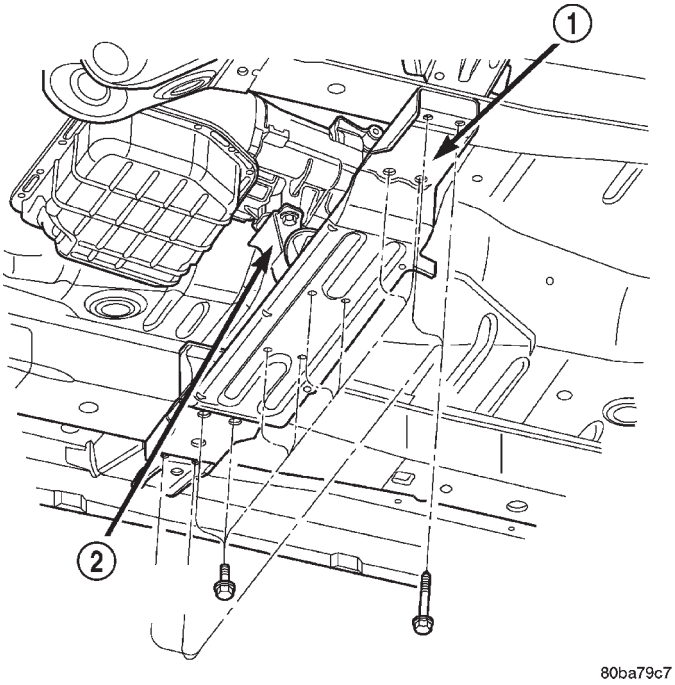

Fig. 4 Crossmember Removal

1 - CROSSMEMBER
2 - REAR TRANSMISSION MOUNT

(7) Disconnect front propeller shaft from transfer case at companion flange. Remove rear propeller shaft from vehicle. (Refer to 3 - DIFFERENTIAL & DRIVELINE/PROPELLER SHAFT/PROPELLER SHAFT - REMOVAL)

CAUTION: Do not allow propshafts to hang at attached end. Damage to joint can result.

(8) Disconnect transfer case cable from range lever.
(9) Disconnect transfer case vent hose (Fig. 5).
(10) Support transfer case with transmission jack.
(11) Secure transfer case to jack with chains.
(12) Remove nuts attaching transfer case to transmission.
(13) Pull transfer case and jack rearward to disengage transfer case (Fig. 5).
(14) Remove transfer case from under vehicle.

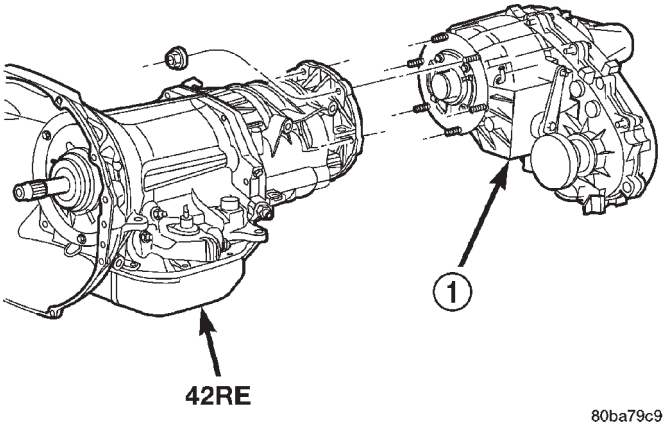

Fig. 5 Transfer Case Mounting

1 - NV247 TRANSFER CASE

DISASSEMBLY

Position transfer case on shallow drain pan. Remove drain plug and drain lubricant remaining in case.

REAR RETAINER AND OIL PUMP

(1) Remove rear retainer bolts (Fig. 6).
(2) Remove rear bearing locating ring access plug (Fig. 7).

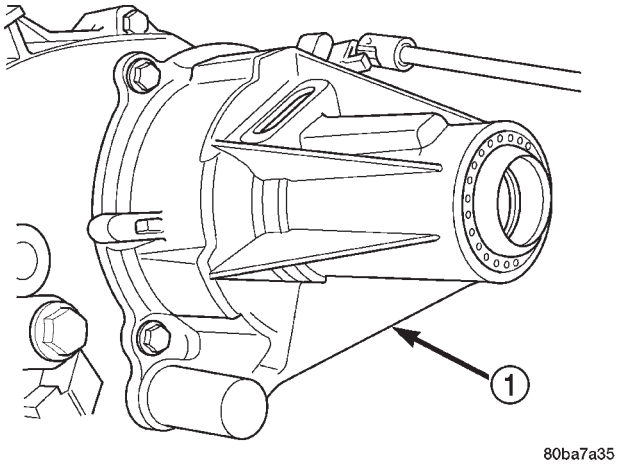

Fig. 6 Rear Retainer Bolt Removal

1 - REAR RETAINER

TRANSFER CASE - NV247 (Continued)

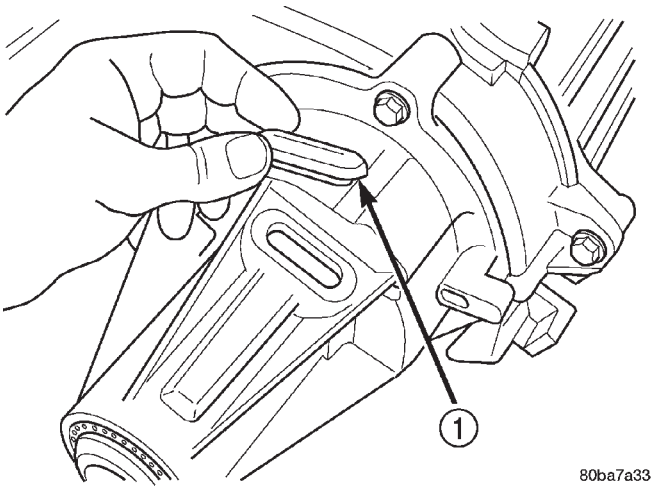

Fig. 7 Remove Rubber Access Plug

1 - PLUG

(3) Loosen rear retainer with pry tool to break sealer bead. Pry only against retainer boss as shown (Fig. 8).

(4) Remove rear retainer as follows:

(a) Spread rear bearing locating ring with snap ring pliers (Fig. 9).

(b) Then slide retainer off mainshaft and rear bearing (Fig. 10).

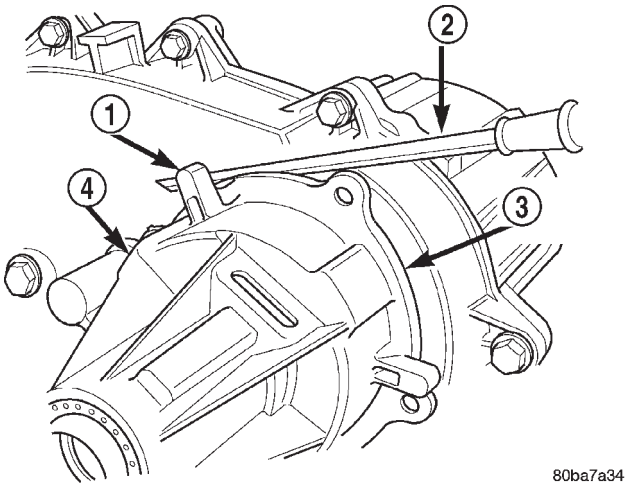

Fig. 8 Loosening Rear Retainer

1 - RETAINER BOSS
2 - PRY TOOL
3 - SEALER BEAD
4 - REAR RETAINER

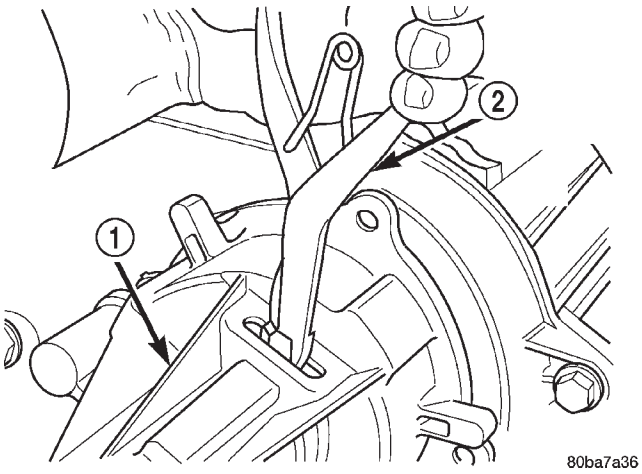

Fig. 9 Disengaging Rear Bearing Locating Ring

1 - REAR RETAINER
2 - PARALLEL JAW SNAP-RING PLIERS

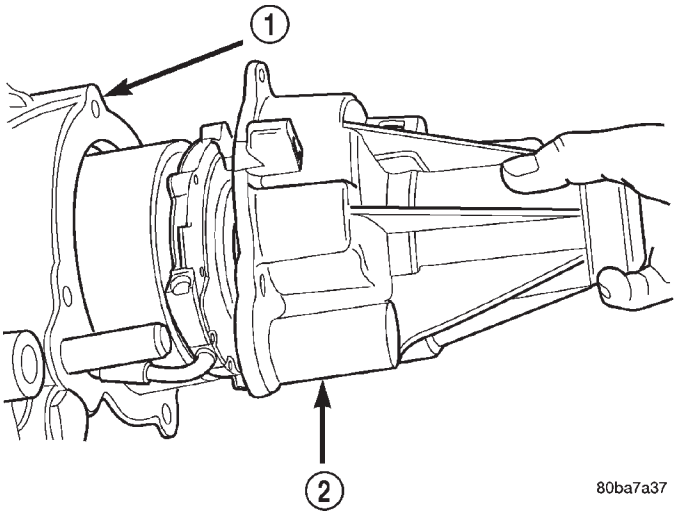

Fig. 10 Rear Retainer Removal

1 - REAR CASE
2 - REAR RETAINER

TRANSFER CASE - NV247 (Continued)

(5) Remove rear bearing snap-ring.

(6) Remove rear bearing. Note position of bearing locating ring groove for assembly reference.

(7) Disengage oil pickup tube from oil pump and remove oil pump assembly (Fig. 11).

(8) Remove pick-up tube o-ring from oil pump (Fig. 12), if necessary. Do not disassemble the oil pump, it is not serviceable.

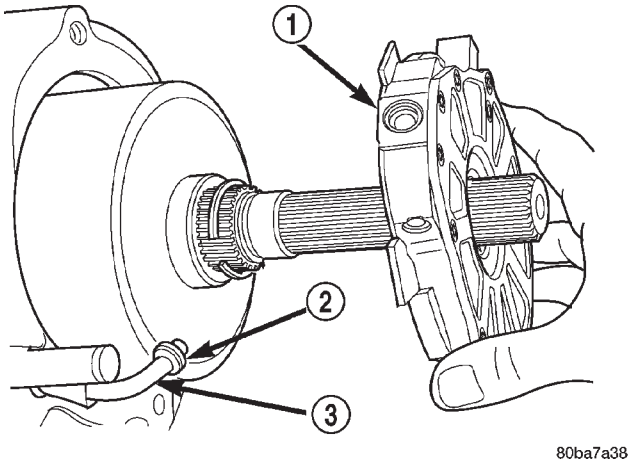

Fig. 11 Rear Bearing and Oil Pump Removal

1 - OIL PUMP
2 - TUBE O-RING
3 - OIL PICKUP TUBE

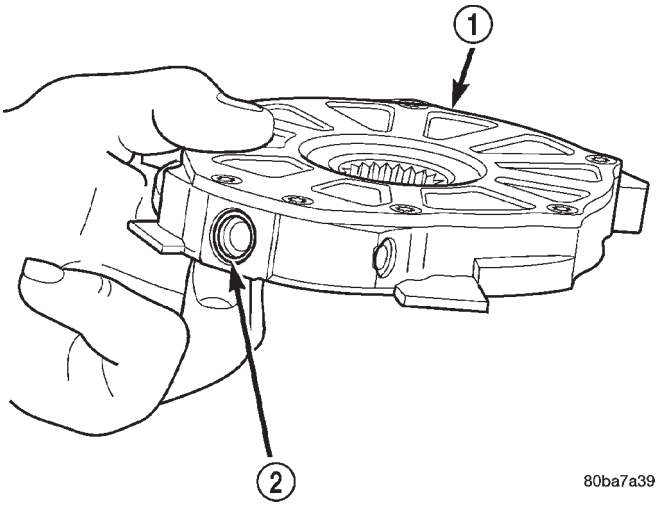

Fig. 12 Pick-up Tube O-ring Location

1 - OIL PUMP
2 - O-RING

COMPANION FLANGE AND RANGE LEVER

(1) Remove front companion flange nut as follows:

(a) Move range lever to 4L position.

(b) Remove nut with socket and impact wrench.

(2) Remove companion flange. If flange is difficult to remove by hand, remove it with bearing splitter, or with standard two jaw puller. Be sure puller tool is positioned on flange and not on slinger as slinger will be damaged.

(3) Remove seal washer from front output shaft. Discard washer as it should not be reused.

(4) Remove nut and washer that attach range lever to sector shaft. Then move sector to neutral position and remove range lever from shaft.

NOTE: Note position of range lever so it can be re-installed correctly.

REAR CASE

(1) Support transfer case so rear case is facing upward.

(2) Remove bolts holding front case to rear case. The case alignment bolt require flat washers (Fig. 13).

(3) Loosen rear case with flat blade screwdriver to break sealer bead. Insert screwdriver blade only into notches provided at each end of case (Fig. 14).

(4) Remove rear case (Fig. 15).

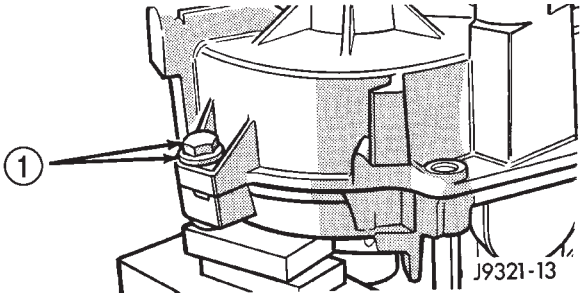

Fig. 13 Rear Case Alignment Bolt Locations

1 - ALIGNMENT BOLT AND WASHER (AT EACH END OF CASE)

TRANSFER CASE - NV247 (Continued)

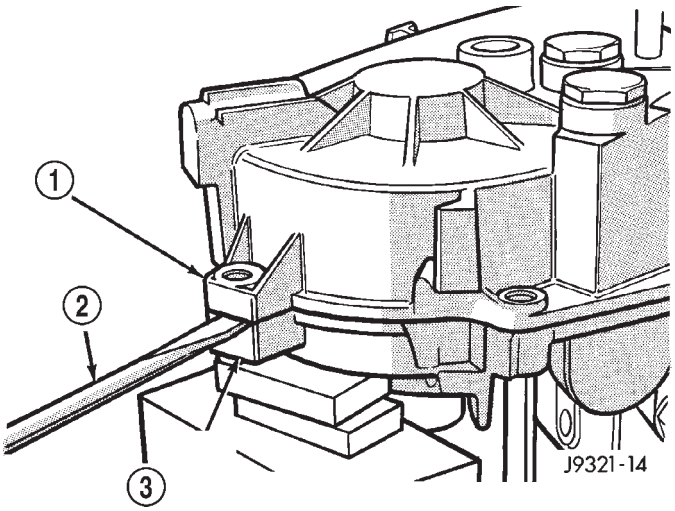

Fig. 14 Loosening Rear Case

1 - REAR CASE
2 - PRY TOOL (IN CASE SLOT)
3 - FRONT CASE

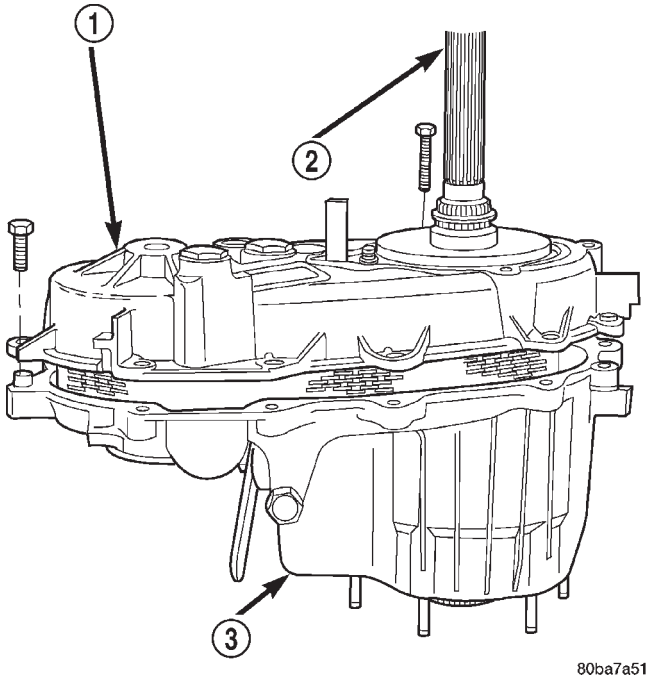

Fig. 15 Rear Case Removal

1 - REAR HOUSING
2 - MAINSHAFT
3 - TRANSFER CASE

PROGRESSIVE COUPLING

(1) Remove oil pump locating snap-ring and progressive coupling thrust washer from the mainshaft (Fig. 16).

(2) Remove progressive coupling from mainshaft (Fig. 16).

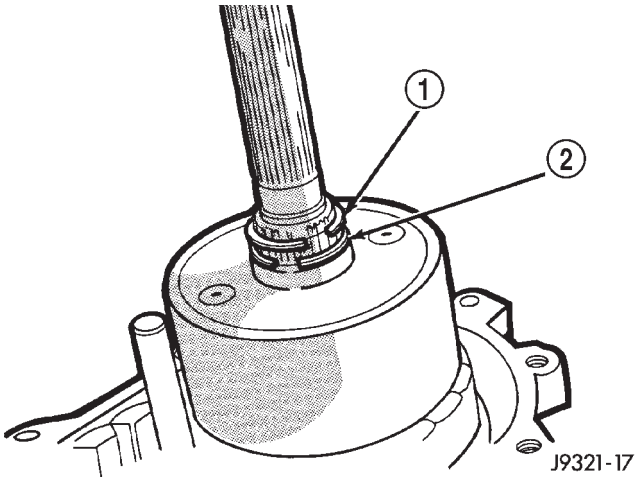

Fig. 16 Progressive Coupling Removal

1 - SNAP-RING
2 - PROGRESSIVE COUPLING

FRONT OUTPUT SHAFT AND DRIVE CHAIN

(1) Remove oil pickup tube from rear case (Fig. 17).

(2) Remove drive gear snap-ring (Fig. 18).

(3) Disengage drive gear (Fig. 18). Pry gear upward and off mainshaft as shown.

(4) Remove front output shaft, drive chain and drive gear as assembly (Fig. 18).

(5) Remove output shaft drive gear snap ring.

(6) Remove output shaft drive gear from output shaft.

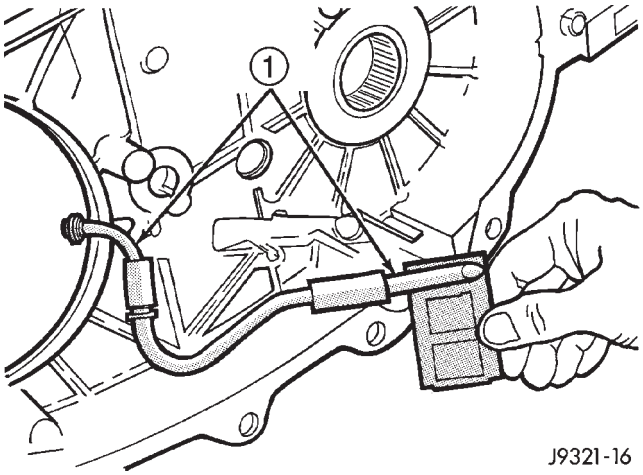

Fig. 17 Oil Pickup Tube Removal

1 - OIL PICKUP TUBE

TRANSFER CASE - NV247 (Continued)

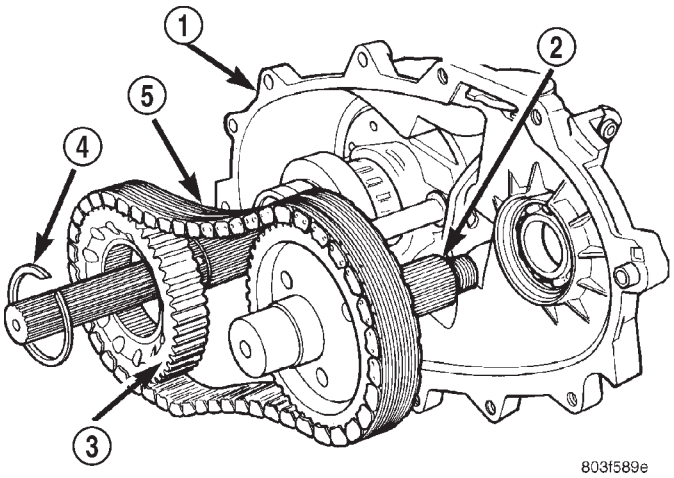

Fig. 18 Front Output Shaft, Drive Gear And Chain Removal

1 - REAR HOUSING
2 - OUTPUT SHAFT AND SPROCKET
3 - MAINSHAFT SPROCKET
4 - SNAP-RING
5 - DRIVE CHAIN

SHIFT FORKS AND MAINSHAFT

(1) Remove detent plug, O-ring, detent spring and detent plunger (Fig. 19).

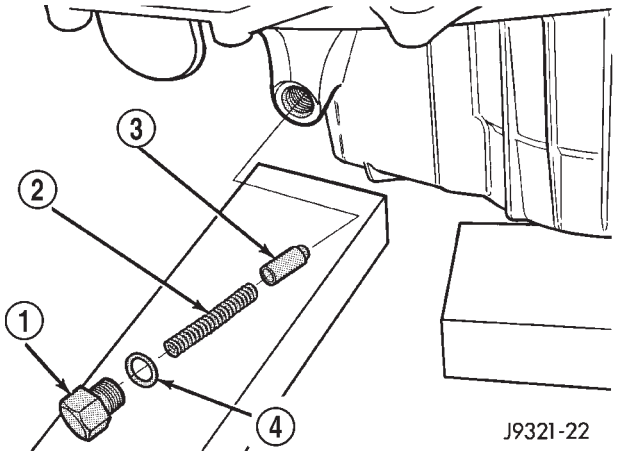

Fig. 19 Detent Plug, Spring And Plunger Removal

1 - DETENT PLUG
2 - DETENT SPRING
3 - DETENT PLUNGER
4 - PLUG O-RING

(2) Remove shift rail from shift fork and transfer case housing.

(3) Rotate range shift fork until it disengages from shift sector.

(4) Remove mainshaft and shift fork from input gear pilot bearing.

NOTE: Loose needle bearings are used to support the drive sprocket hub on the mainshaft. Do not lift mainshaft by drive sprocket hub or needle bearings will become dislodged.

(5) Wrap rag around mainshaft underneath drive sprocket hub and remove drive sprocket hub from mainshaft. Be sure to retrieve all the drive sprocket hub needle bearings.

(6) Remove snap ring holding clutch sleeve onto mainshaft.

(7) Remove range clutch sleeve, blockout spring, locking clutch, and locking clutch spring from mainshaft (Fig. 20).

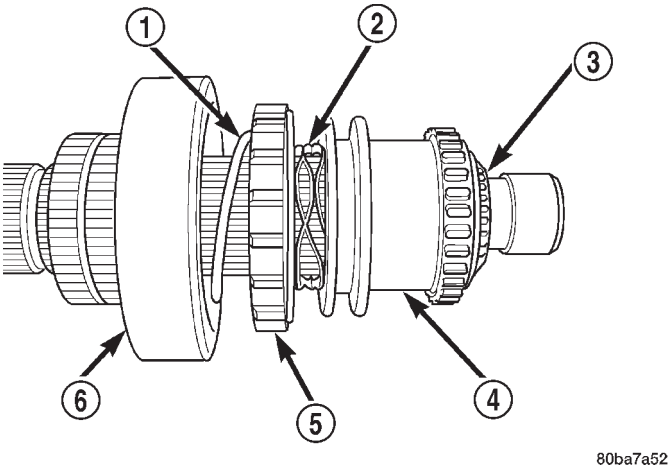

Fig. 20 Range Clutch Sleeve, Blockout Spring, Locking Clutch and Spring

1 - LOCKING CLUTCH SPRING
2 - BLOCKOUT SPRING
3 - SNAP-RING
4 - RANGE CLUTCH SLEEVE
5 - LOCKING CLUTCH
6 - DRIVE SPROCKET HUB

TRANSFER CASE - NV247 (Continued)

(8) Remove shift sector. Rotate and tilt sector as needed to remove it (Fig. 21).

(9) Remove shift sector bushing and O-ring (Fig. 22).

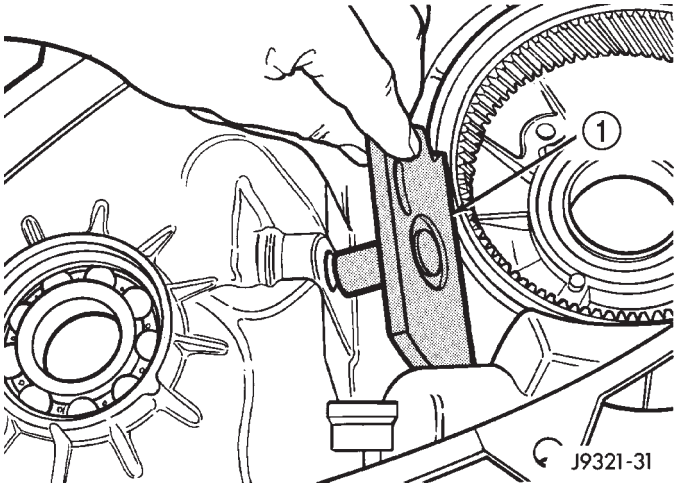

Fig. 21 Shift Sector Removal

1 - SHIFT SECTOR

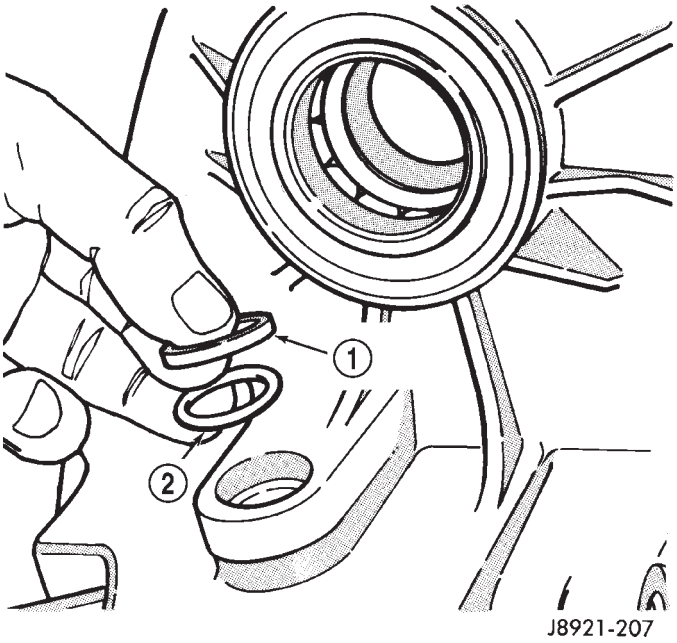

Fig. 22 Sector Bushing And O-Ring Removal

1 - SHIFT SECTOR BUSHING
2 - O-RING

INPUT GEAR/LOW RANGE ASSEMBLY

(1) Turn front case on side so front bearing retainer is accessible.

(2) Remove front bearing retainer bolts (Fig. 23).

(3) Remove front bearing retainer as follows:

(a) Loosen retainer with flat blade screwdriver to break sealer bead. **To avoid damaging case and retainer, position screwdriver blade only in slots provided in retainer (Fig. 24).**

(b) Then remove retainer from case and gear.

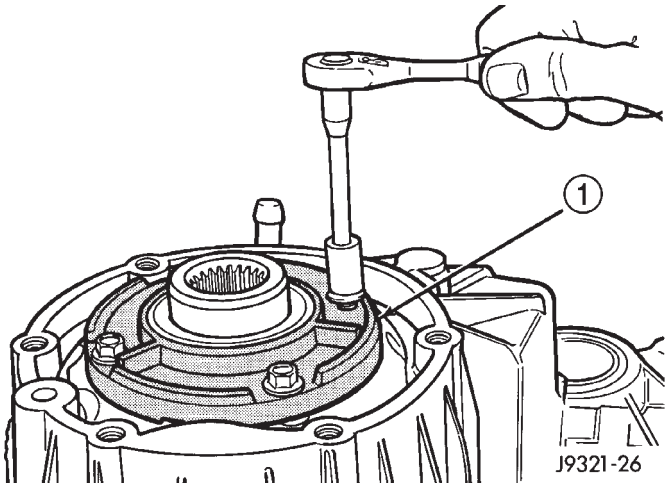

Fig. 23 Front Bearing Retainer Bolt Removal

1 - FRONT BEARING RETAINER

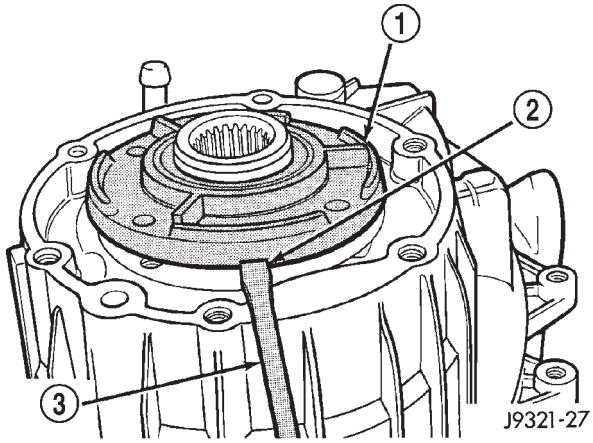

Fig. 24 Front Bearing Retainer Removal

1 - FRONT BEARING RETAINER
2 - RETAINER NOTCH
3 - FLAT BLADE SCREWDRIVER

TRANSFER CASE - NV247 (Continued)

(4) Remove snap-ring that retains input gear shaft in front bearing (Fig. 25).

(5) Remove input and low range gear assembly (Fig. 26).

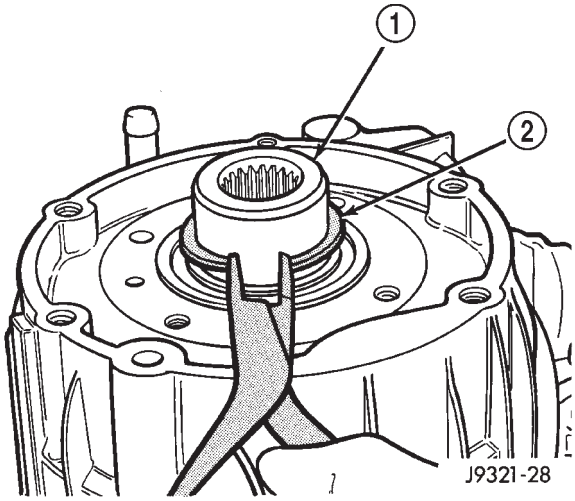

Fig. 25 Input Gear Snap-Ring Removal

1 - INPUT GEAR
2 - SNAP-RING

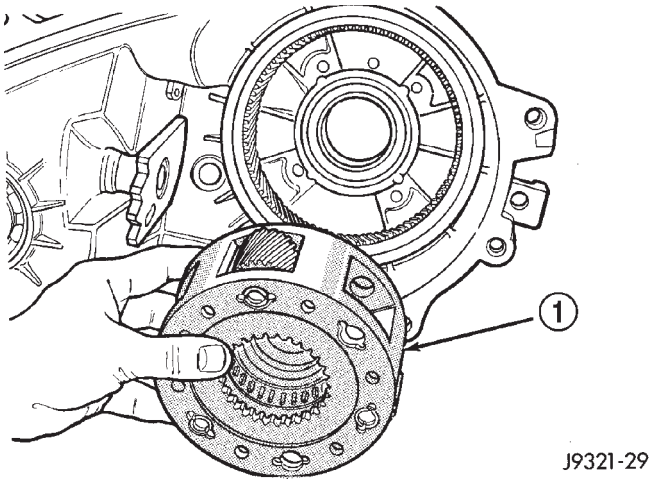

Fig. 26 Input And Low Range Gear Assembly Removal

1 - INPUT AND LOW RANGE GEAR ASSEMBLY

(6) Remove oil seals from following components:

- front bearing retainer.
- rear retainer.
- case halves.

INPUT AND LOW RANGE GEAR

(1) Remove snap-ring that retains input gear in low range gear (Fig. 27).

(2) Remove retainer (Fig. 28).

(3) Remove front tabbed thrust washer (Fig. 29).

(4) Remove input gear (Fig. 30).

(5) Remove rear tabbed thrust washer from low range gear (Fig. 31).

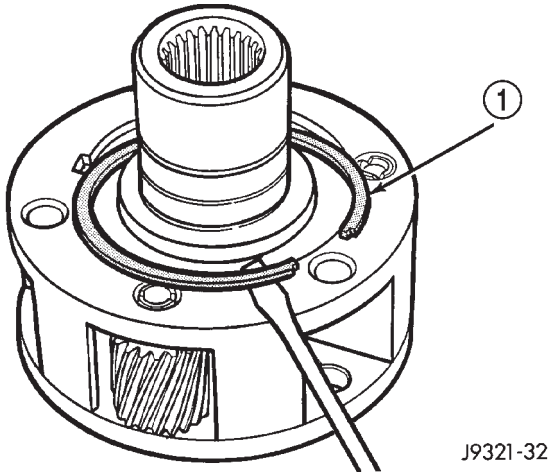

Fig. 27 Input Gear Snap-Ring Removal

1 - INPUT GEAR SNAP-RING

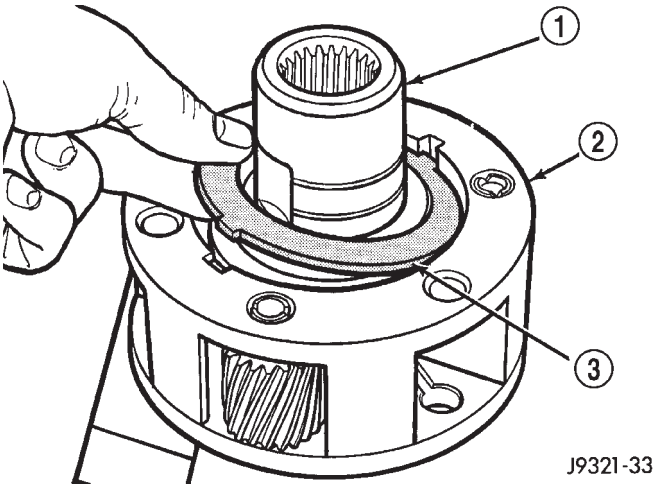

Fig. 28 Input Gear Retainer

1 - INPUT GEAR
2 - LOW RANGE GEAR
3 - RETAINER

TRANSFER CASE - NV247 (Continued)

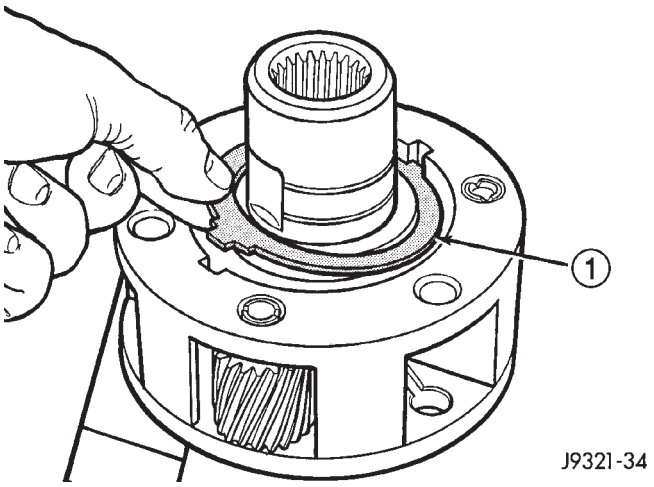

Fig. 29 Front Tabbed Thrust Washer

1 - FRONT TABBED THRUST WASHER

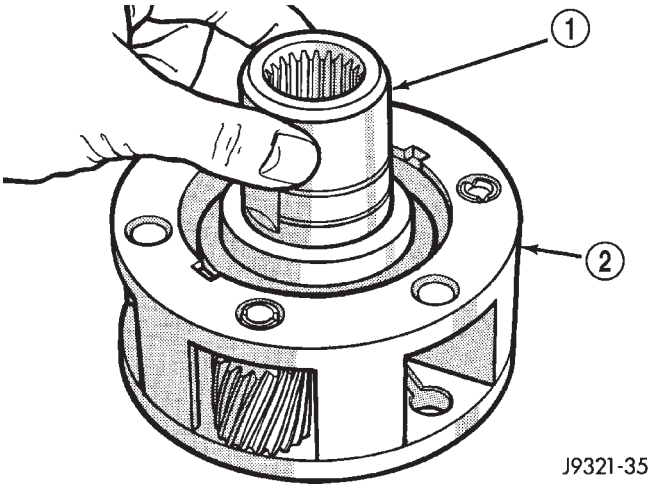

Fig. 30 Input Gear Removal

1 - INPUT GEAR
2 - LOW RANGE GEAR

CLEANING

Clean the transfer case components with parts cleaning solvent. Flush the oil passages in the cases and drivetrain components with solvent. This will help remove dirt and particles from these passages.

Dry the transfer case components with compressed air or allow them to air dry on clean shop towels.

Apply compressed air through all oil passages in the cases and gear components to clear them of any residue.

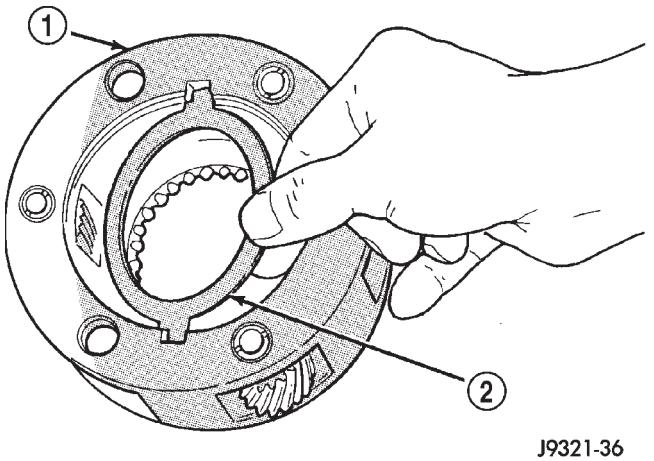

Fig. 31 Rear Tabbed Thrust Washer Removal

1 - LOW RANGE GEAR
2 - REAR TABBED THRUST WASHER

INSPECTION

MAINSHAFT

Examine the mainshaft components carefully for evidence of wear or damage.

Replace the thrust washers if worn or damaged.

Replace the mainshaft and sprocket gears if the teeth or gear bores are worn or damaged.

Replace the mainshaft bearings if worn, flat spotted, brinelled, or damaged in any way.

Replace the mainshaft if it is bent, exhibits wear or damage to the bearing surfaces, splines or gear teeth.

INPUT AND LOW RANGE GEARS

Inspect the low range gear pinions and pinion pins. Replace the low range gear if any of the pins or pinions are worn or damaged.

Inspect the thrust washers, retainer, and snap-ring. Replace the snap-ring if bent, or distorted. Replace the thrust washers and retainer if worn, cracked or damaged in any way.

Examine the input gear carefully. Be sure the gear teeth and bearing surfaces are in good condition. Replace the gear if wear or damage is evident.

Check the input gear pilot bearing. Rotate the bearing and check for roughness or noise. Also check bearing position in the bore. The bearing should be recessed approximately 2.5 mm (0.100 in.) below the top edge of the bore. The bearing should not be seated at the bottom of the bore. Replace the bearing if worn, or roughness is evident. Replace both the gear and bearing if the bearing is a loose fit in the bore.

TRANSFER CASE - NV247 (Continued)

GEAR CASE AND RETAINERS

Examine both case halves and retainers carefully. Replace any retainer or case half if wear, cracks, or other damage is evident.

Check condition of the low range annulus gear and the shift rail bushing in the front case (Fig. 32). The low range annulus gear is not a serviceable part. Replace the gear and case as an assembly if the gear is loose, worn, or damaged. The shift rail bushing is a serviceable part and can be replaced if necessary.

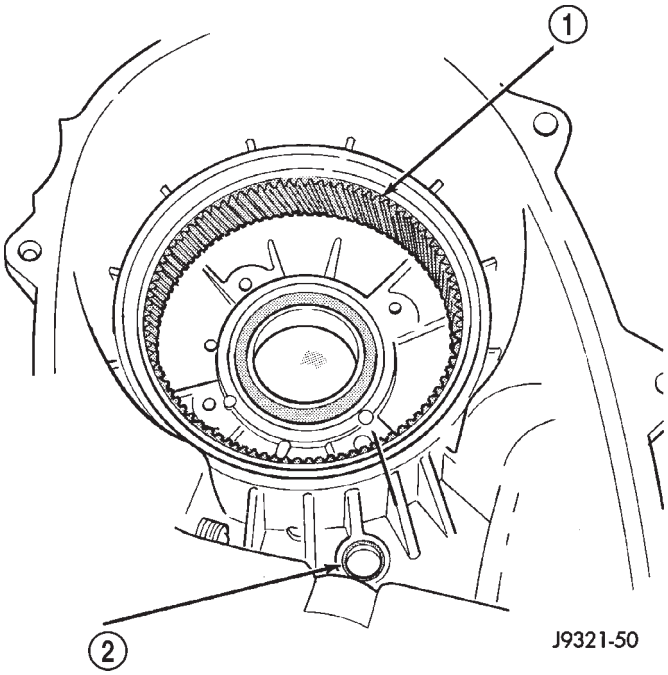

Fig. 32 Low Range Annulus Gear Location

1 - LOW RANGE ANNULUS GEAR
2 - SHIFT RAIL BUSHING

Check the bushing in the rear retainer. Replace the bushing if worn or scored.

Examine the sealing surfaces of both case halves and retainers. Small burrs, or scratches on these surfaces can be reduced with crocus cloth or a fine tooth file.

Examine condition of the shift rail bushing in the front case. If the bushing is worn or damaged, it can be removed with a blind hole type puller. A replacement bushing can be installed with a suitable size driver. Recess the bushing slightly below the edge of the bore but do not seat it all the into the case.

GEARTRAIN

Inspect the mainshaft splines, gear teeth and bearing surfaces carefully for evidence of wear, or damage. Replace the shaft if necessary. do not attempt to salvage it if damaged.

The shift rail and range fork are an assembly. Replace both parts if either is damaged. However, the nylon pads in the fork can be replaced if worn, or cracked.

Inspect the transfer case snap-rings closely. Do not attempt to salvage a distorted snap-ring by straightening or reshaping it. Replace any snap-ring that is distorted, or worn.

Inspect the low range gear, input gear and the gear thrust washers retainer, and snap-ring. The low range gear is serviced as an assembly only. Replace the gear if the case or pinions are damaged.

During inspection, also make sure the seal surface of the input gear is in good condition. Minor nicks on this surface can be reduced with crocus cloth. However, replace the gear if the seal surface is severely scored or worn.

OIL PUMP AND PROGRESSIVE COUPLING

The oil pump and progressive coupling are not serviceable components. Replace the coupling as an assembly if it is damaged. Replace the oil pump as an assembly if the gear teeth are worn, or if the pump has become damaged.

BEARINGS AND SEALS

The transfer case seals should be replaced during overhaul. Use new seals in the input gear bearing retainer, front case and rear retainer. Also replace the yoke seal washer and the detent plug O-ring.

Check condition of each transfer case bearing. Replace any bearing exhibiting signs of roughness, wear, or damage.

ASSEMBLY

Lubricate transfer case components with Mopar® Transfer Case Lubricant or petroleum jelly (where indicated) during assembly.

CAUTION: The bearing bores in various transfer case components contain oil feed holes. Make sure replacement bearings do not block the holes.

BEARINGS AND SEALS

(1) Remove front output shaft seal from front case with pry tool (Fig. 33).

(2) Remove snap-ring that retains front output shaft bearing in front case (Fig. 34).

(3) Using tool 6953, remove bearing from front case (Fig. 35).

(4) Using tool 6953, install new bearing.

(5) Install snap-ring to hold bearing into case.

(6) Install new front output seal in front case with Installer Tool 6952-A as follows:

(a) Place new seal on tool. **Garter spring on seal goes toward interior of case.**

(b) Start seal in bore with light taps from hammer (Fig. 36). Once seal is started, continue tapping seal into bore until installer tool bottoms against case.

TRANSFER CASE - NV247 (Continued)

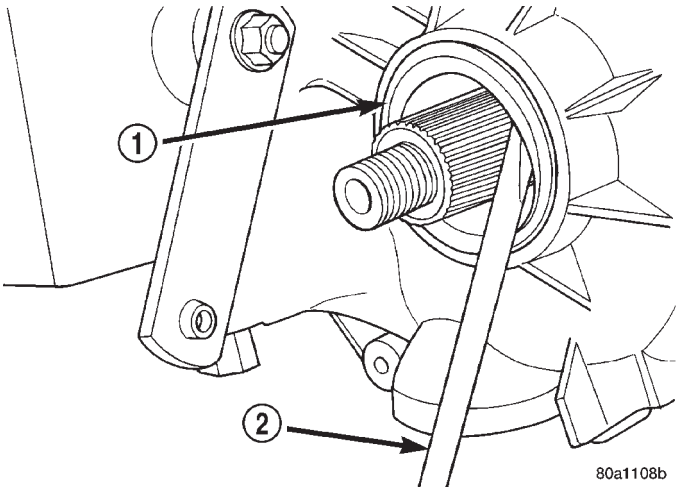

Fig. 33 Remove Front Output Shaft Seal

1 - OUTPUT SHAFT SEAL
2 - PRYBAR

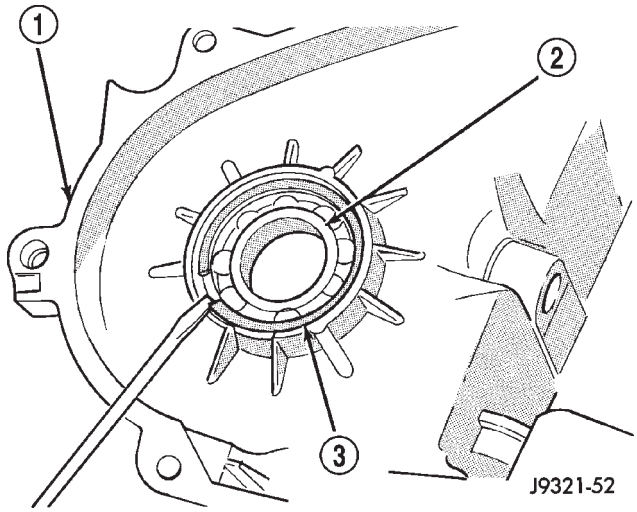

Fig. 34 Output Shaft Front Bearing Snap-Ring Removal

1 - FRONT CASE
2 - OUTPUT SHAFT FRONT BEARING
3 - BEARING SNAP-RING

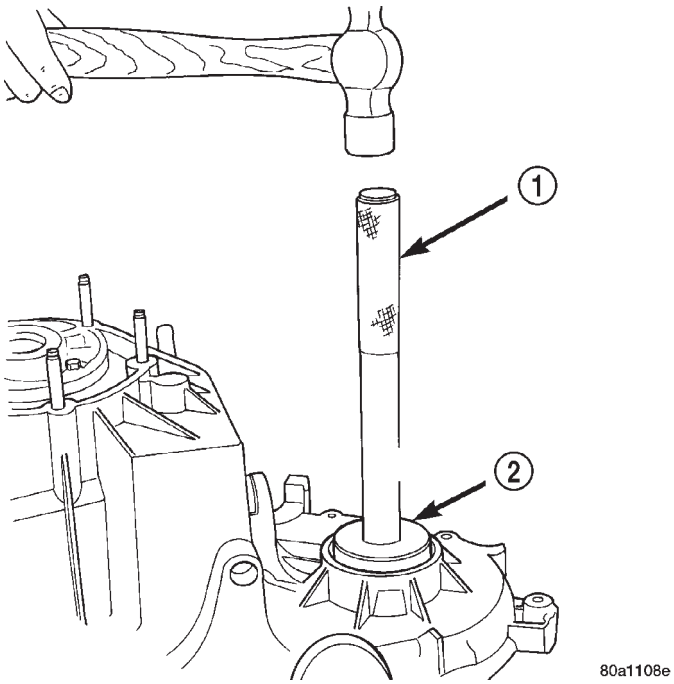

Fig. 35 Remove Output Shaft Front Bearing

1 - HANDLE C-4171
2 - REMOVER/INSTALLER 6953

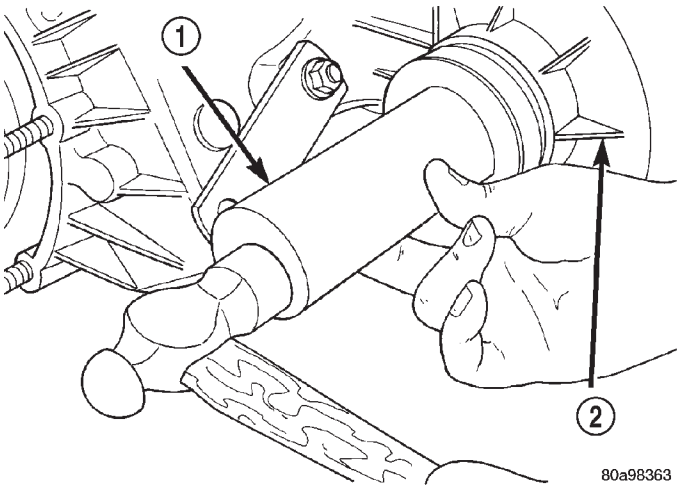

Fig. 36 Front Output Seal Installation

1 - INSTALLER 6952-A
2 - TRANSFER CASE

TRANSFER CASE - NV247 (Continued)

(7) Remove the output shaft rear bearing with the screw and jaws from Remover L-4454 and Cup 8148 (Fig. 37).

(8) Install new bearing with Tool Handle C-4171 and Installer 5066 (Fig. 38). **The bearing bore is chamfered at the top. Install the bearing so it is flush with the lower edge of this chamfer (Fig. 39).**

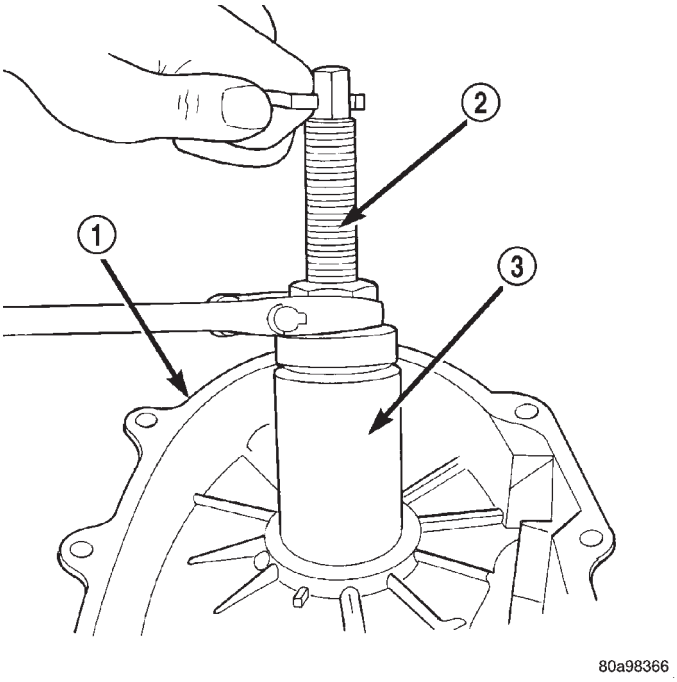

Fig. 37 Output Shaft Rear Bearing Removal

1 - REAR CASE
2 - SPECIAL TOOL L-4454-1 AND L-4454-3
3 - SPECIAL TOOL 8148

(9) Using Remover C-4210 and Handle C-4171, drive input shaft bearing from inside the annulus gear opening in the case. (Fig. 40).

(10) Install locating ring on new bearing.

(11) Position case so forward end is facing upward.

(12) Using Remover C-4210 and Handle C-4171, drive input shaft bearing into case. The bearing locating ring must be fully seated against case surface (Fig. 41).

(13) Remove input gear pilot bearing by inserting a suitably sized drift into the splined end of the input gear and driving the bearing out with the drift and a hammer (Fig. 42).

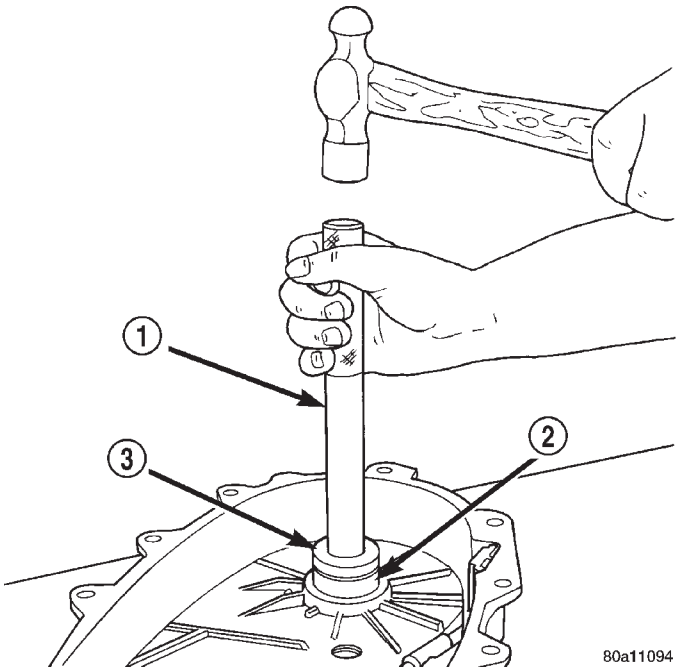

Fig. 38 Output Shaft Rear Bearing Installation

1 - HANDLE C-4171
2 - OUTPUT SHAFT INNER BEARING
3 - INSTALLER 5066

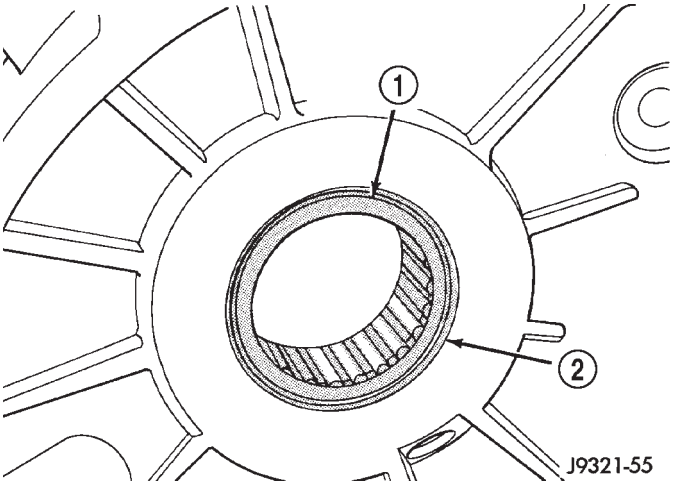

Fig. 39 Output Shaft Rear Bearing Installation Depth

1 - BEARING (SEATED) AT LOWER EDGE OF CHAMFER
2 - CHAMFER

TRANSFER CASE - NV247 (Continued)

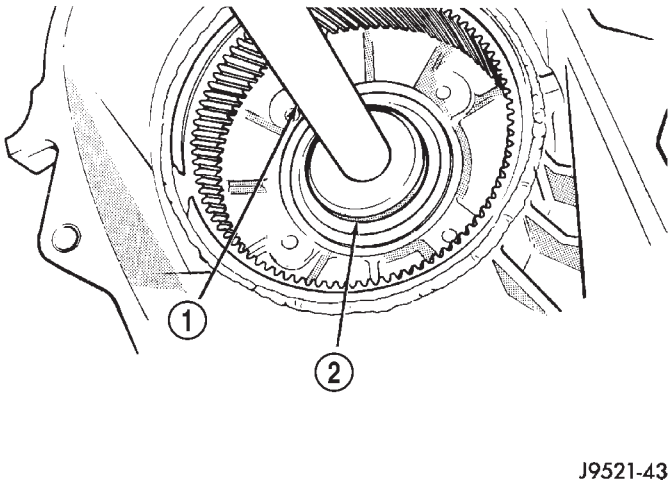

Fig. 40 Input Shaft Bearing Removal

1 - SPECIAL TOOL C-4171
2 - SPECIAL TOOL C-4210

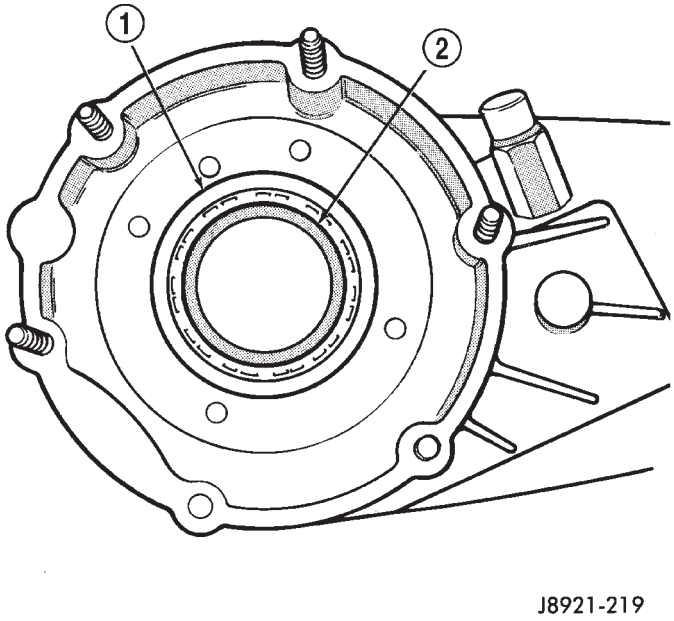

Fig. 41 Seating Input Shaft Bearing

1 - SNAP-RING
2 - INPUT SHAFT BEARING

(14) Install new pilot bearing with Installer 8128 and Handle C-4171 (Fig. 43).

(15) Remove front bearing retainer seal with suitable pry tool.

(16) Install new front bearing retainer with Installer 7884 (Fig. 44).

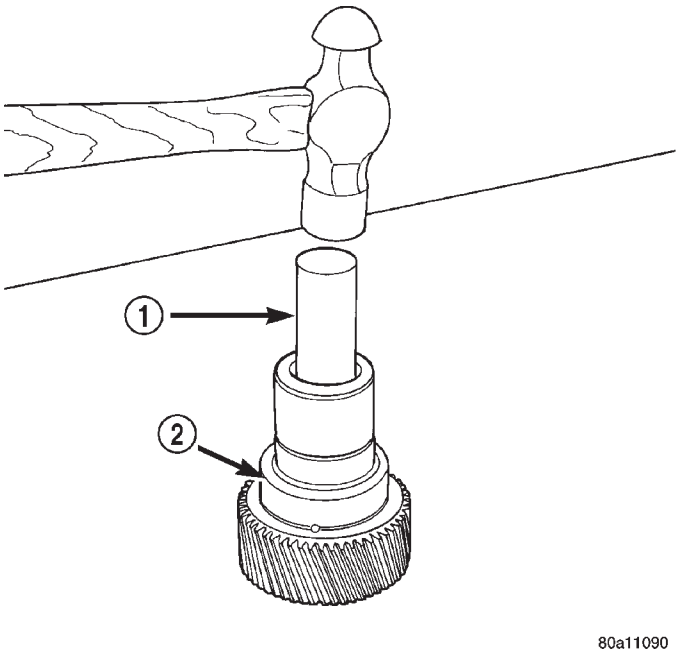

Fig. 42 Remove Input Gear Pilot Bearing

1 - DRIFT
2 - INPUT GEAR

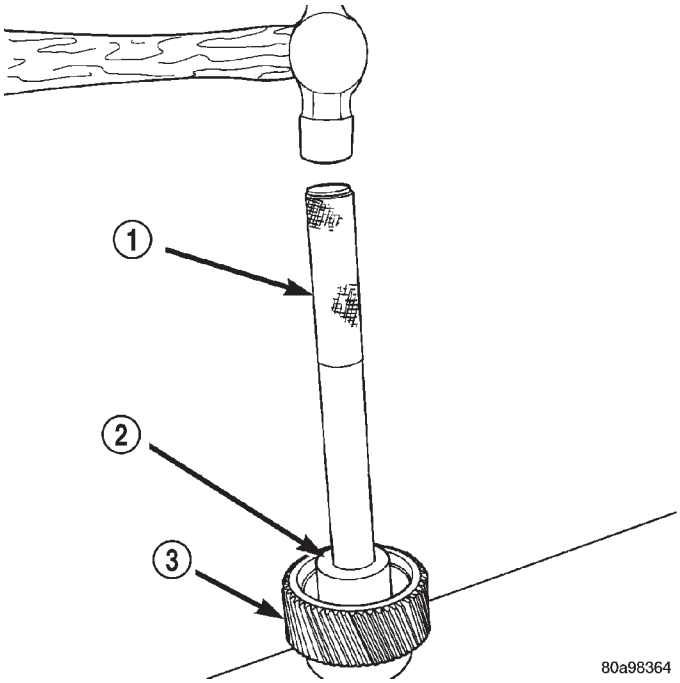

Fig. 43 Install Input Gear Pilot Bearing

1 - HANDLE C-4171
2 - INSTALLER 8128
3 - INPUT GEAR

TRANSFER CASE - NV247 (Continued)

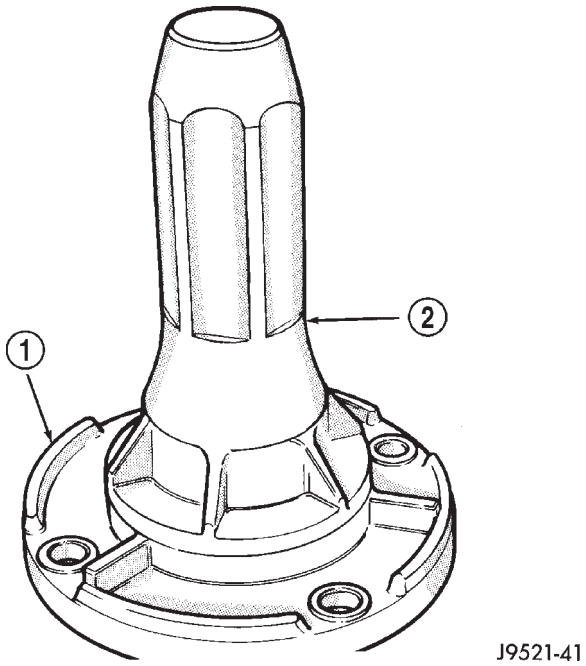

Fig. 44 Install Front Bearing Retainer Seal

1 - FRONT BEARING RETAINER
2 - SPECIAL TOOL 7884

INPUT AND LOW RANGE GEAR

(1) Lubricate gears and thrust washers (Fig. 45) with transfer case lubricant.

(2) Install first thrust washer in low range gear (Fig. 45). Be sure washer tabs are properly aligned in gear notches.

(3) Install input gear in low range gear. Be sure input gear is fully seated.

(4) Install remaining thrust washer in low range gear and on top of input gear. Be sure washer tabs are properly aligned in gear notches.

(5) Install retainer on input gear and install snap-ring.

(6) Align and install low range/input gear assembly in front case (Fig. 46). Be sure low range gear pinions are engaged in annulus gear and that input gear shaft is fully seated in front bearing.

(7) Install snap-ring to hold input/low range gear into front bearing (Fig. 47).

(8) Clean gasket sealer residue from retainer and inspect retainer for cracks or other damage.

(9) Apply a 3 mm (1/8 in.) bead of Mopar® gasket maker or silicone adhesive to sealing surface of retainer.

(10) Align cavity in seal retainer with fluid return hole in front of case.

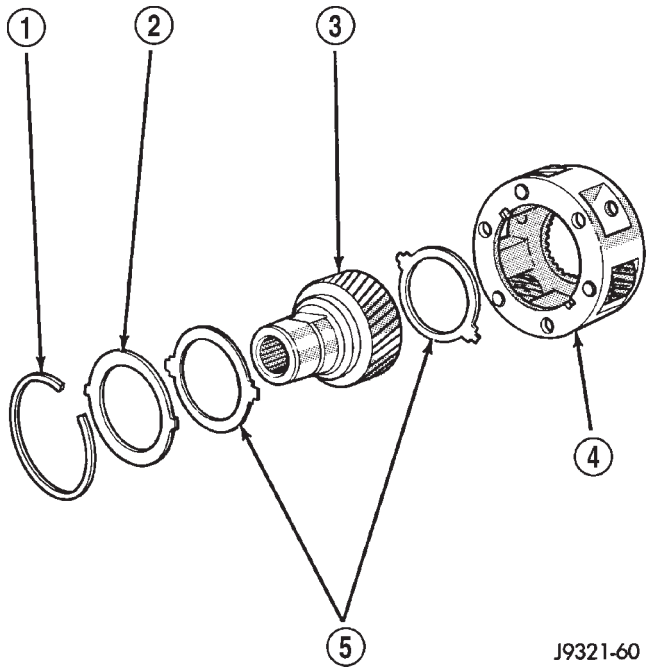

Fig. 45 Input/Low Range Gear Components

1 - SNAP-RING
2 - RETAINER PLATE
3 - INPUT GEAR
4 - LOW RANGE GEAR
5 - THRUST WASHERS

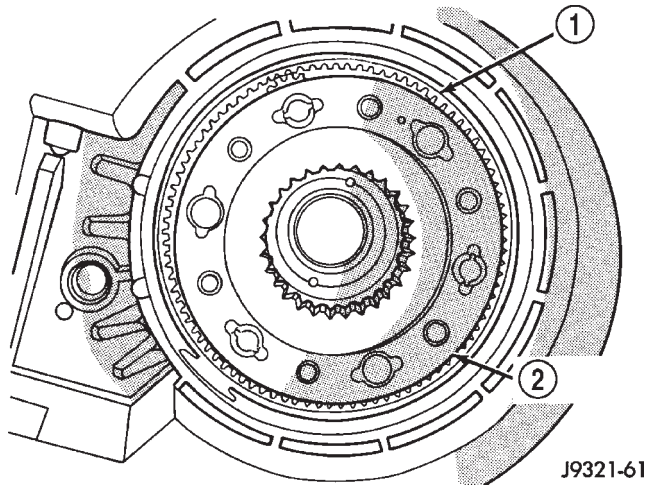

Fig. 46 Input/Low Range Gear Installation

1 - ANNULUS GEAR
2 - INPUT/LOW RANGE GEAR

TRANSFER CASE - NV247 (Continued)

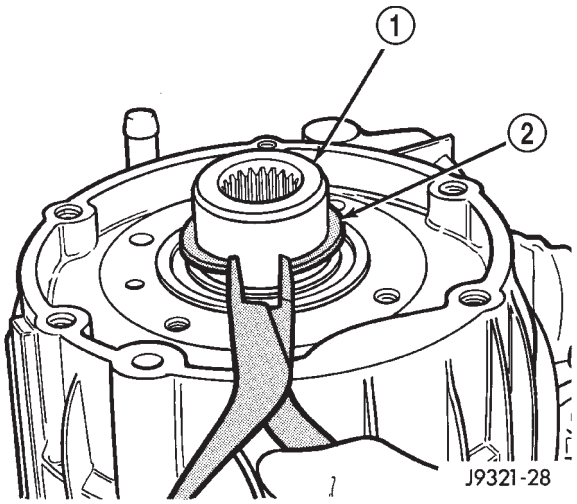

Fig. 47 Install Input Gear Snap-Ring

1 - INPUT GEAR
2 - SNAP-RING

CAUTION: Do not block fluid return cavity on sealing surface of retainer when applying Mopar® gasket maker or silicone adhesive sealer. Seal failure and fluid leak can result.

(11) Install bolts to hold retainer to transfer case (Fig. 48). Tighten to 21 N·m (16 ft. lbs.) of torque.

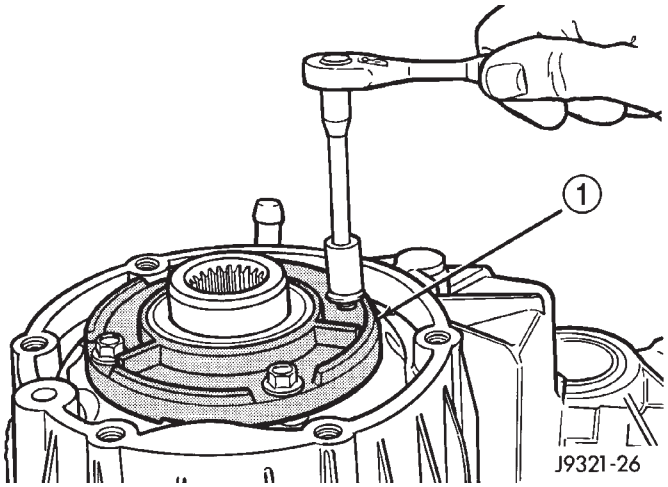

Fig. 48 Install Front Bearing Retainer

1 - FRONT BEARING RETAINER

SHIFT FORKS AND MAINSHAFT

(1) Install new sector shaft O-ring and bushing (Fig. 49).

(2) Install shift sector (Fig. 50).

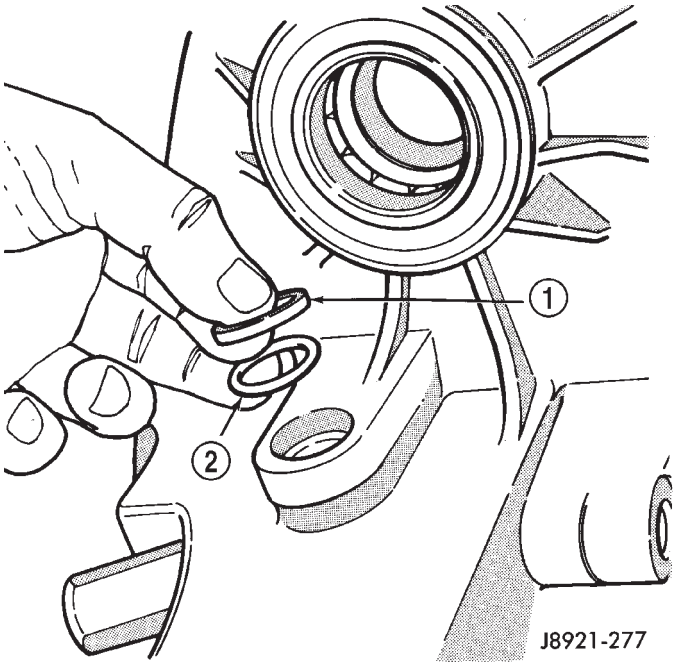

Fig. 49 Sector O-Ring And Bushing Installation

1 - SECTOR BUSHING
2 - O-RING

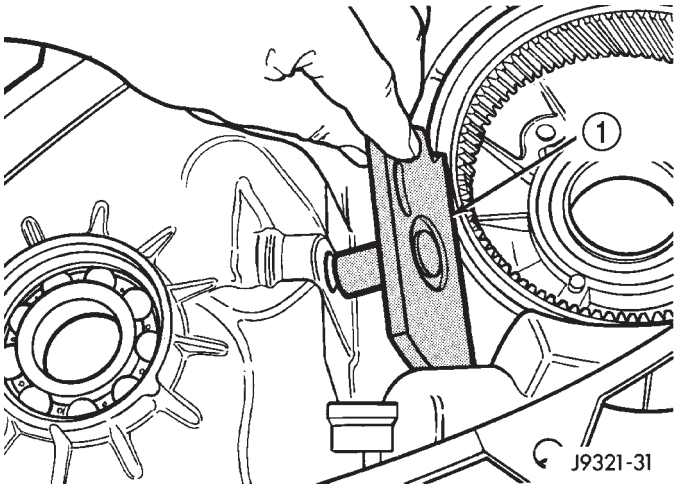

Fig. 50 Shift Sector Installation

1 - SHIFT SECTOR

TRANSFER CASE - NV247 (Continued)

(3) Install locking clutch spring, locking clutch, blockout spring, and range clutch sleeve, to mainshaft as shown in (Fig. 51). Install snap ring.

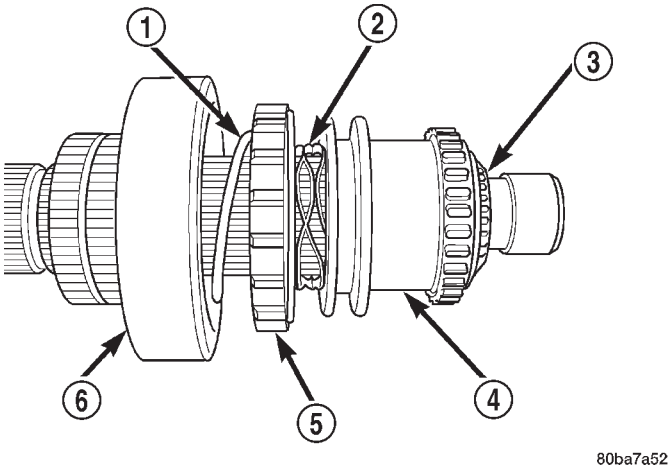

Fig. 51 Range Clutch Sleeve, Blockout Spring, Locking Clutch and Spring

1 - LOCKING CLUTCH SPRING
2 - BLOCKOUT SPRING
3 - SNAP-RING
4 - RANGE CLUTCH SLEEVE
5 - LOCKING CLUTCH
6 - DRIVE SPROCKET HUB

(4) Install drive sprocket hub to mainshaft and manually load the needle bearings.

(5) Install new pads on range fork, if necessary.

(6) Install range shift fork to range clutch sleeve. Install mainshaft/range shift fork assembly into transfer case and input planetary assembly. Rotate fork until it engages with slot in shift sector.

(7) Install shift rail to shift range fork and transfer case housing.

(8) Rotate shift sector to NEUTRAL position.

(9) Install new O-ring on detent plug (Fig. 52).

(10) Lubricate detent plunger with transfer case lubricant or light coat of petroleum jelly.

(11) Install detent plunger, spring and plug (Fig. 52).

(12) Verify that plunger is properly engaged in sector.

FRONT OUTPUT SHAFT AND DRIVE CHAIN

(1) Lubricate front output shaft-sprocket assembly, drive chain and drive sprocket with transfer case lubricant.

(2) Assemble drive chain, drive sprocket and front output shaft (Fig. 53).

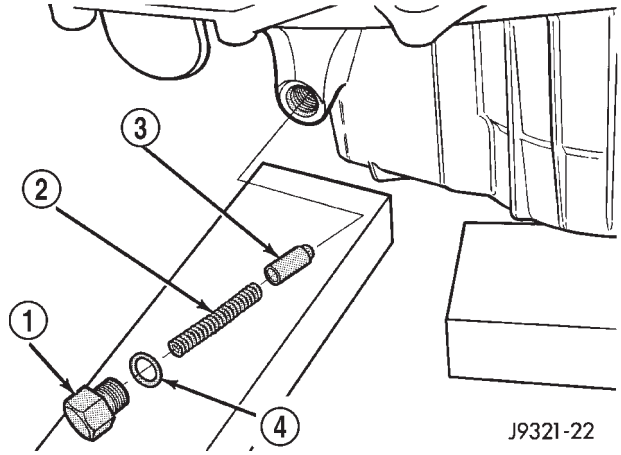

Fig. 52 Shift Detent Components

1 - DETENT PLUG
2 - DETENT SPRING
3 - DETENT PLUNGER
4 - PLUG O-RING

(3) Start drive sprocket on mainshaft.

(4) Guide front shaft into bearing and drive sprocket onto mainshaft drive gear (Fig. 53).

(5) Install drive sprocket snap-ring (Fig. 54).

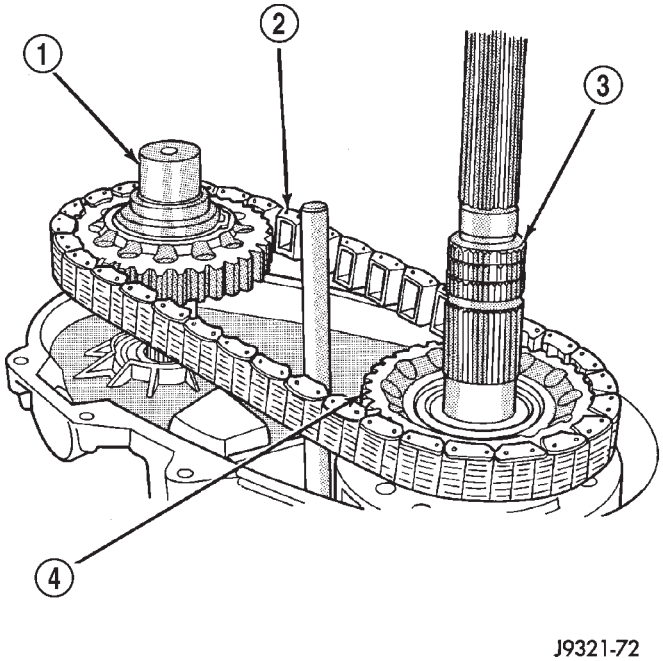

Fig. 53 Installing Drive Chain, Front Output Shaft And Drive Sprocket

1 - FRONT OUTPUT SHAFT
2 - DRIVE CHAIN
3 - MAINSHAFT
4 - DRIVE SPROCKET

TRANSFER CASE - NV247 (Continued)

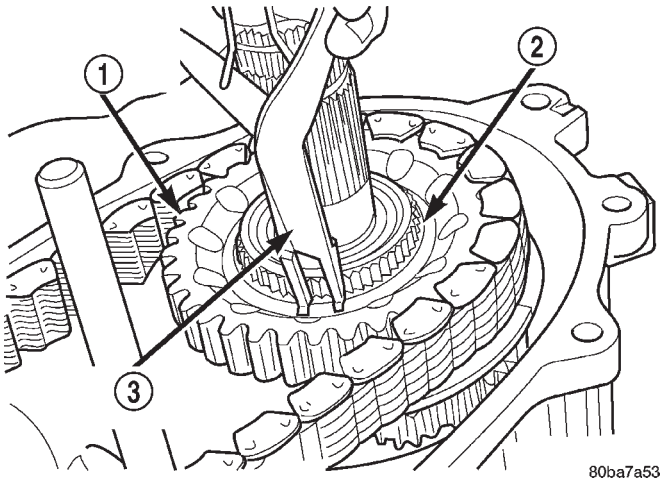

Fig. 54 Installing Drive Sprocket Snap-Ring

1 - MAINSHAFT DRIVE SPROCKET
2 - DRIVE SPROCKET SNAP-RING
3 - SNAP-RING PLIERS

(6) Install roller bearings if removed.

(7) Install progressive coupling (Fig. 55).

(8) Install the progressive coupling thrust washer over the output shaft and against the coupling.

(9) Install the oil pump locating snap-ring onto the output shaft.

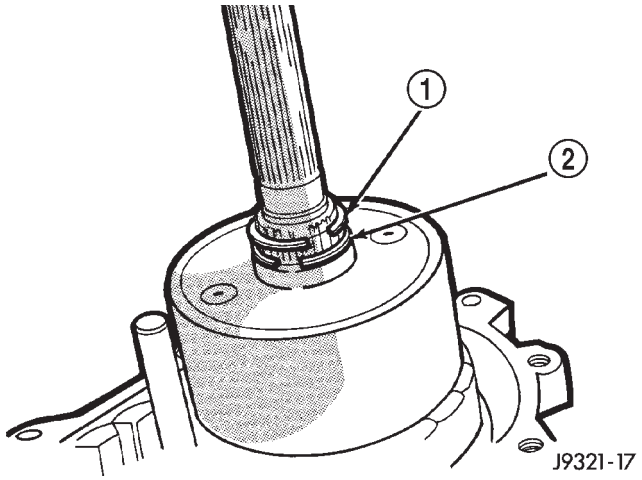

Fig. 55 Progressive Coupling Installation

1 - SNAP-RING
2 - PROGRESSIVE COUPLING

(10) Install oil pickup tube in rear case. Be sure tube is seated in case notch as shown (Fig. 56).

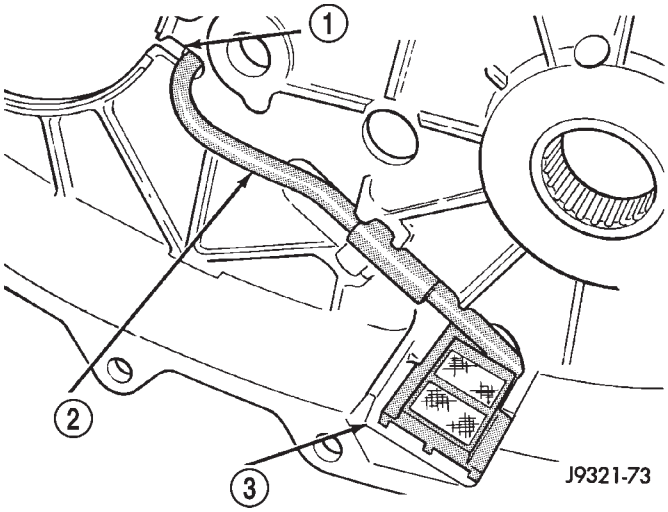

Fig. 56 Oil Pickup Tube Installation

1 - CASE NOTCH
2 - OIL PICKUP TUBE ASSEMBLY
3 - CASE SLOT

(11) Install magnet in front case pocket (Fig. 57).

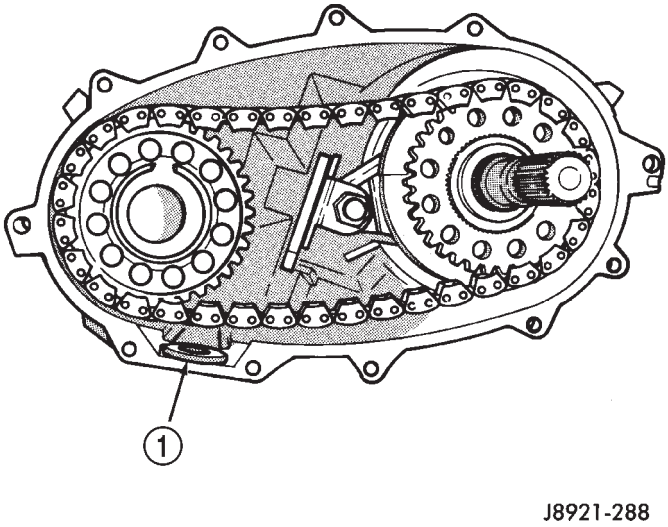

Fig. 57 Installing Case Magnet

1 - MAGNET

TRANSFER CASE - NV247 (Continued)

(12) Clean sealing flanges of front case and rear case with a wax and grease remover.

(13) Apply 3 mm (1/8 in.) wide bead of Mopar® gasket maker or silicone adhesive sealer to mounting flange of front case. Work sealer bead around bolt holes as shown (Fig. 58).

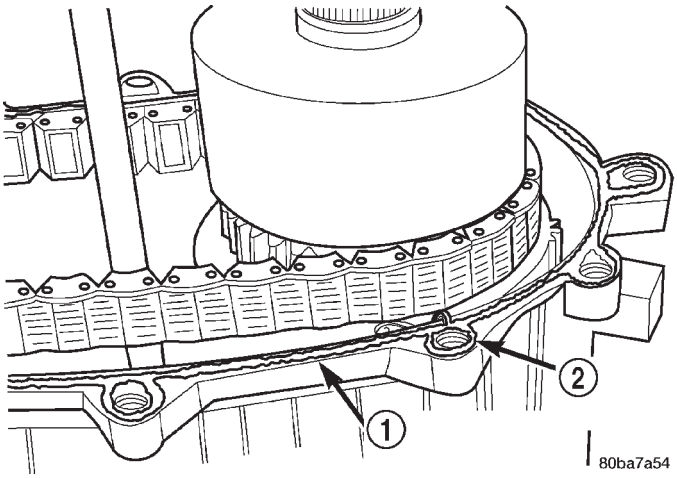

Fig. 58 Applying Sealer To Front Case Flange

1 - FRONT CASE FLANGE
2 - SEALER BEAD

(14) Align and install rear case on front case (Fig. 59).

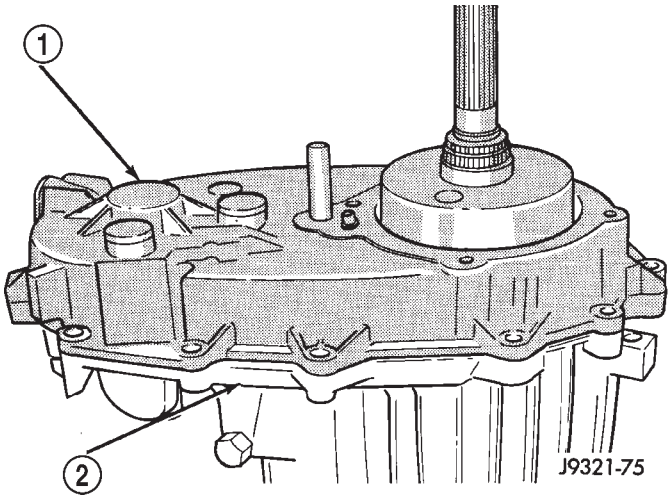

Fig. 59 Rear Case Installation

1 - REAR CASE
2 - FRONT CASE

(15) Verify that oil pickup tube is still seated in case notch and tube end is pointed toward mainshaft (Fig. 60).

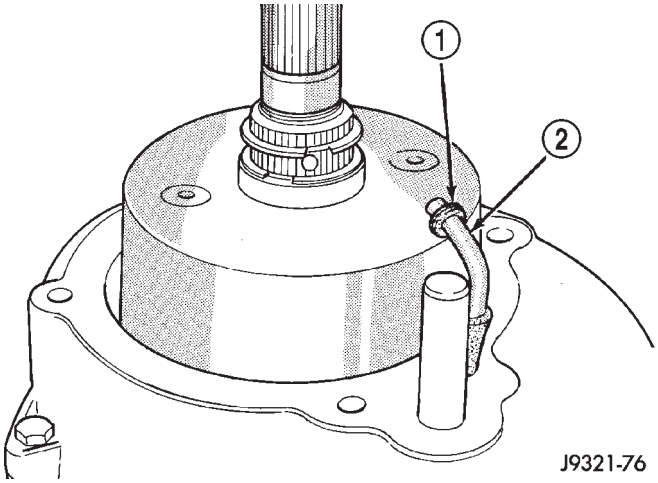

Fig. 60 Checking Position Of Oil Pickup Tube

1 - TUBE O-RING
2 - CORRECT PICKUP TUBE POSITION

(16) Install case attaching bolts. Alignment bolts at each end of case are only ones requiring washers (Fig. 61).

(17) Tighten case bolts to 27-34 N·m (20-25 ft. lbs.) torque.

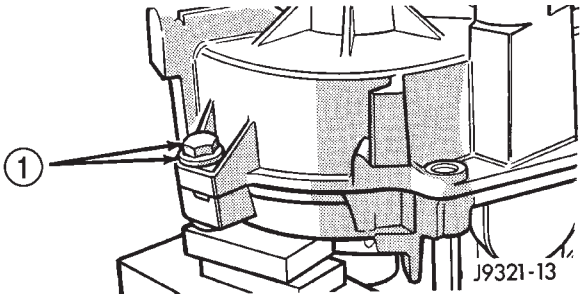

Fig. 61 Alignment Bolt

1 - ALIGNMENT BOLT AND WASHER (AT EACH END OF CASE)

TRANSFER CASE - NV247 (Continued)

COMPANION FLANGE AND RANGE LEVER

(1) Install range lever, washer and locknut on sector shaft (Fig. 62). Tighten locknut to 27-34 N·m (20-25 ft. lbs.) torque.

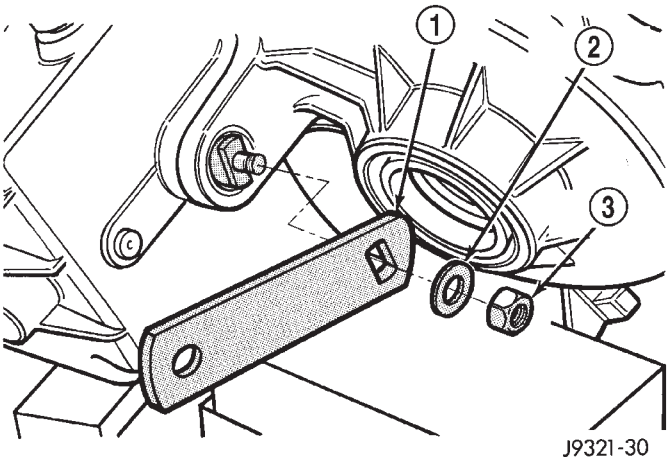

Fig. 62 Range Lever Installation - Typical

1 - RANGE LEVER
2 - WASHER
3 - LOCKNUT

(2) Install new seal washer on front output shaft (Fig. 63).

(3) Lubricate flange hub with transfer case lubricant and install flange on front shaft.

(4) Install new seal washer on front shaft.

(5) Install companion flange and new nut on front output shaft.

(6) Tighten flange nut to 122-176 N·m (90-130 ft. lbs.) torque. Use Tool C-3281, or similar tool to hold flange while tightening yoke nut.

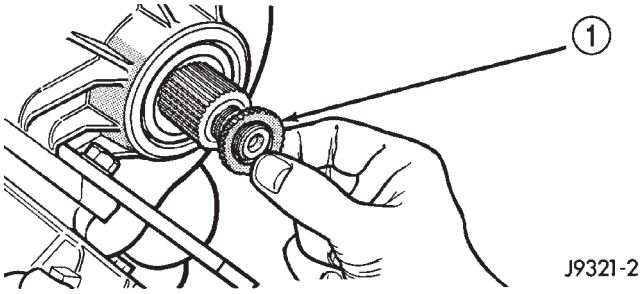

Fig. 63 Flange Seal Washer Installation

1 - YOKE SEAL WASHER

REAR RETAINER AND OIL PUMP

(1) Install new O-ring on flanged end of oil pickup tube.

(2) Install oil pump (Fig. 64).

(3) Insert oil pickup tube in pump (Fig. 65).

(4) Install rear bearing on mainshaft (Fig. 65). Locating ring groove in bearing goes toward end of mainshaft.

(5) Install rear bearing retaining snap-ring (Fig. 66).

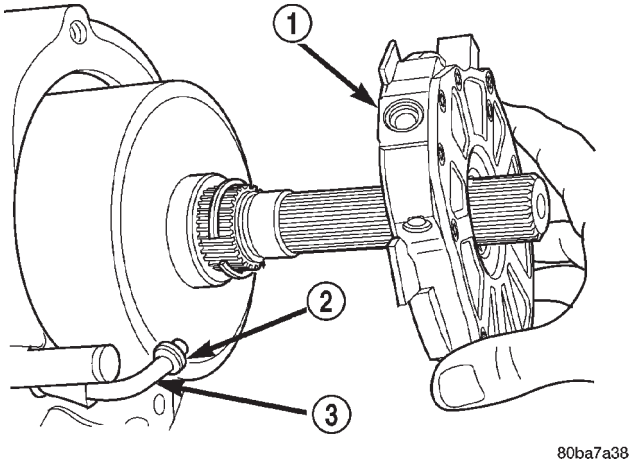

Fig. 64 Installing Oil Pump

1 - OIL PUMP
2 - TUBE O-RING
3 - OIL PICKUP TUBE

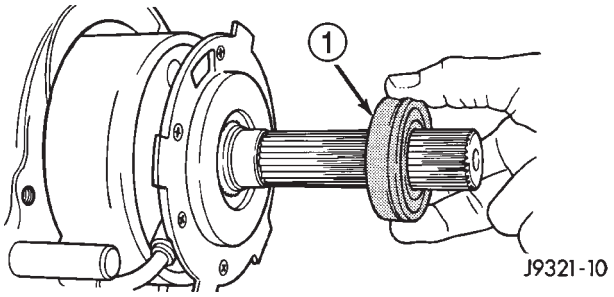

Fig. 65 Rear Bearing Installation

1 - REAR BEARING

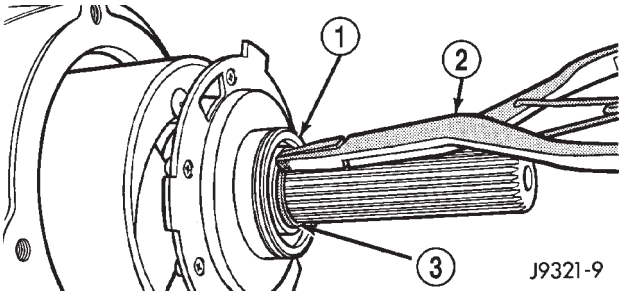

Fig. 66 Rear Bearing Snap-Ring Installation

1 - REAR BEARING
2 - SNAP-RING PLIERS
3 - SNAP-RING

TRANSFER CASE - NV247 (Continued)

(6) Install rear bearing locating ring in rear retainer, if ring was removed during overhaul.

(7) Apply 3 mm (1/8 in.) wide bead of Mopar® gasket maker or silicone adhesive sealer to mounting surface of rear retainer. Allow sealer to set-up slightly before proceeding.

(8) Slide rear retainer onto mainshaft (Fig. 67).

(9) Spread rear bearing locating ring and slide rear retainer into place on rear case (Fig. 68).

(10) Install and tighten rear retainer bolts to 27-34 N·m (20-25 ft. lbs.).

(11) Install rubber access plug (Fig. 69).

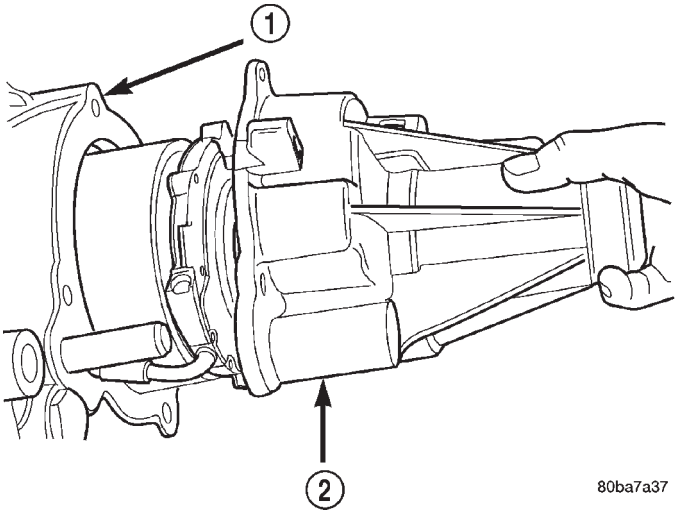

Fig. 67 Rear Retainer Installation

1 - REAR CASE
2 - REAR RETAINER

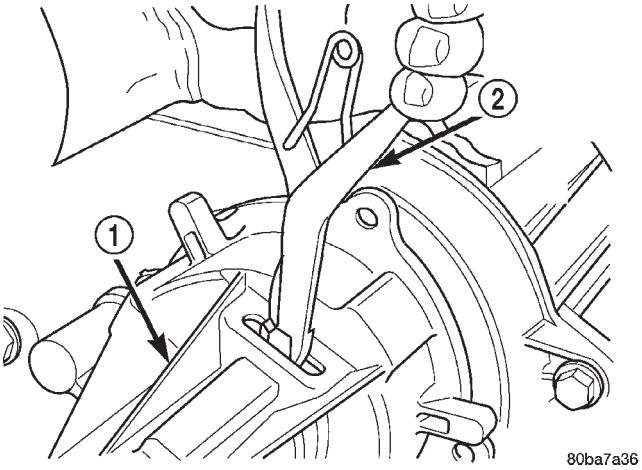

Fig. 68 Engaging Rear Bearing Locating Ring

1 - REAR RETAINER
2 - PARALLEL JAW SNAP-RING PLIERS

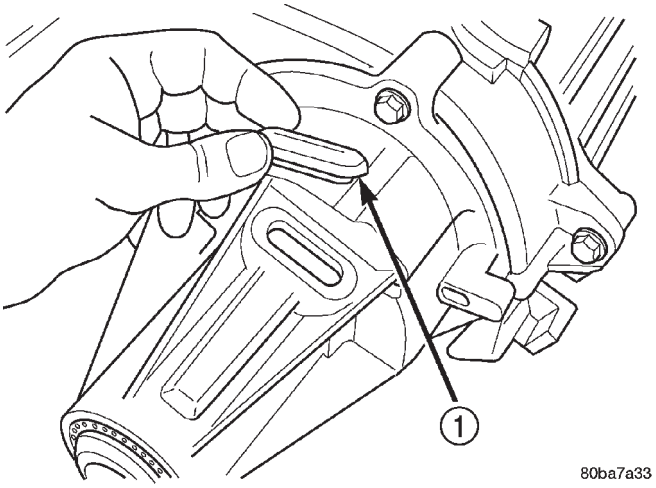

Fig. 69 Installing Rubber Access Plug

1 - PLUG

FINAL ASSEMBLY

(1) Install drain plug. Tighten plug to 41-54 N·m (30-40 ft. lbs.) torque.

(2) Level transfer case and fill it with Mopar® Transfer Case Lubricant. Correct fill level is to bottom edge of fill plug hole.

(3) Install and tighten fill plug to 41-54 N·m (30-40 ft. lbs.) torque.

INSTALLATION

(1) Mount transfer case on a transmission jack.

(2) Secure transfer case to jack with chains.

(3) Position transfer case under vehicle.

(4) Align transfer case and transmission shafts and install transfer case on transmission.

(5) Install and tighten transfer case attaching nuts to 35 N·m (26 ft. lbs.) torque (Fig. 70).

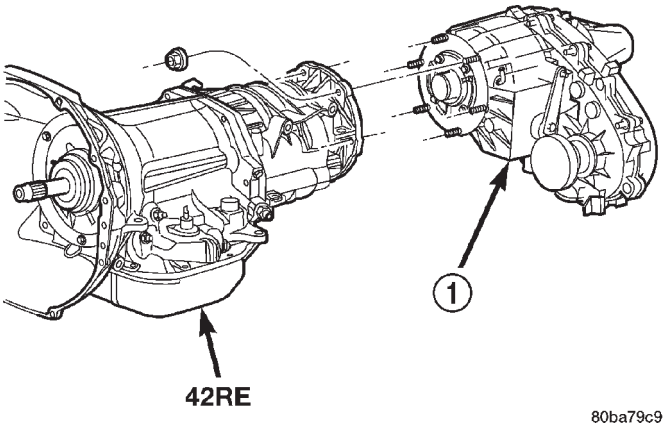

Fig. 70 Install Transfer Case

1 - NV247 TRANSFER CASE

TRANSFER CASE - NV247 (Continued)

(6) Connect front propeller shaft and install rear propeller shaft. (Refer to 3 - DIFFERENTIAL & DRIVELINE/PROPELLER SHAFT/PROPELLER SHAFT - INSTALLATION)

(7) Fill transfer case with correct fluid. Check transmission fluid level. Correct as necessary.

(8) Install rear crossmember (Fig. 71) and skid plate, if equipped. Tighten crossmember bolts to 41 N·m (30 ft. lbs.) torque.

(9) Remove transmission jack and support stand.

(10) Verify transfer case is in NEUTRAL. Connect shift cable to transfer case range lever.

(11) Lower vehicle and verify transfer case shift operation.

(12) Adjust the transfer case shift cable, if necessary.

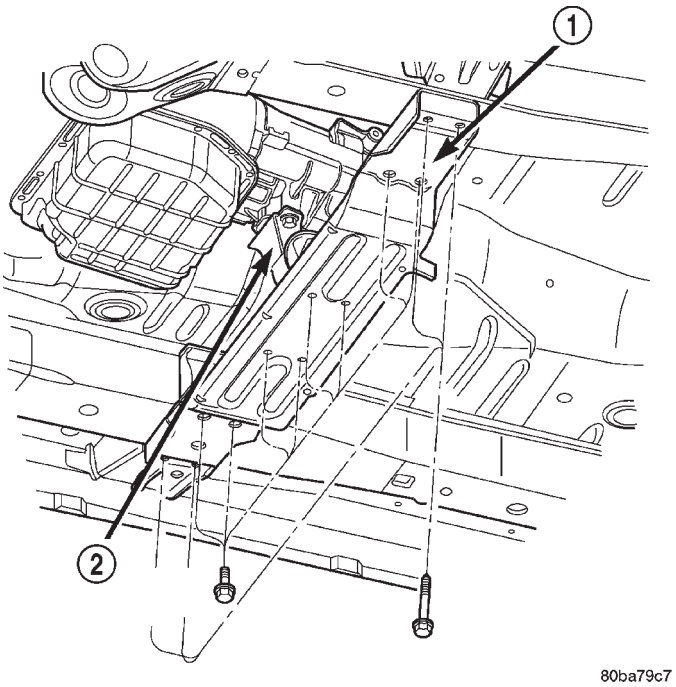

Fig. 71 Crossmember Installation

1 - CROSSMEMBER
2 - REAR TRANSMISSION MOUNT

SPECIFICATIONS

TRANSFER CASE - NV247

TORQUE SPECIFICATIONS

DESCRIPTION	N·m	Ft. Lbs.	In. Lbs.
Bolt, crossmember	41-47	30.2-34.7	-
Plug, Detent	16-24	11.8-17.7	-
Plugs, drain/fill	41-54	30.2-39.8	-
Bolts, front brg. retainer	16-24	11.8-17.7	-
Bolts, case half	27-34	19.9-25	-
Nut, companion flange	122-176	90-130	-
Bolts, rear extension	27-34	19.9-25	-
Lock-nut, shift	27-34	19.9-25	-
Nuts, T-case mount stud	33-41	24.3-30.2	-

SPECIAL TOOLS

TRANSFER CASE - NV247

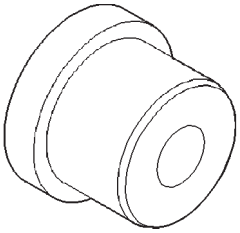

Installer, Bearing - 5066

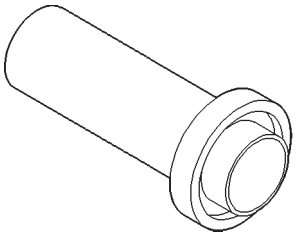

Installer, Seal - 6952-A

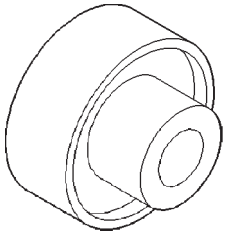

Installer, Bearing - 6953

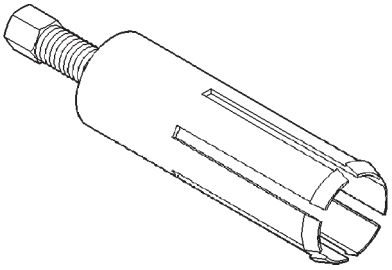

Remover, Bushing - 6957

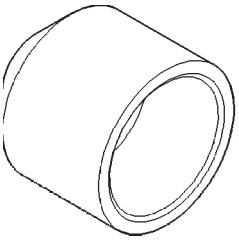

Installer, Seal - C-3995-A

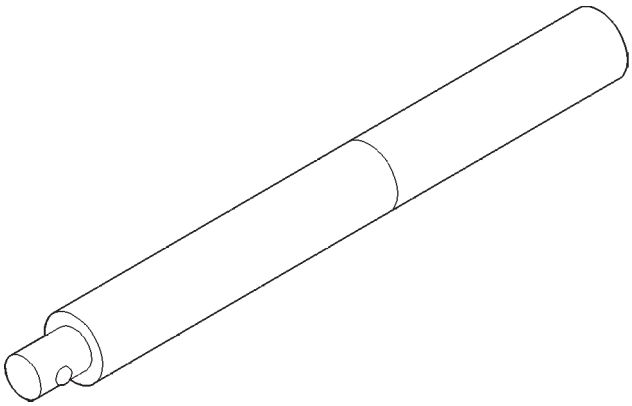

Handle - C-4171

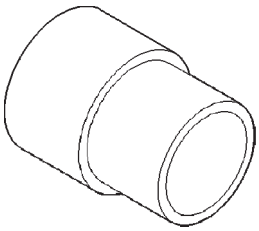

Installer, Bushing - 8145

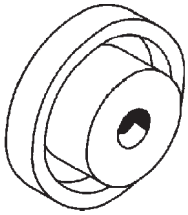

Remover, Bearing - C-4210

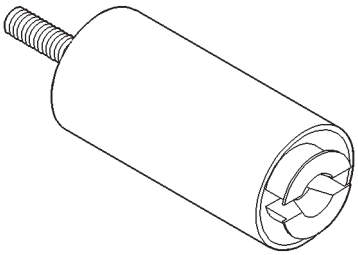

Remover, Bearing - L-4454

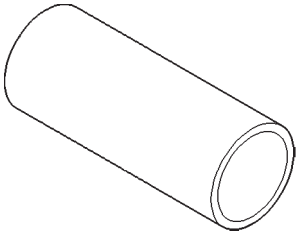

Cup - 8148

SPECIAL TOOLS (Continued)

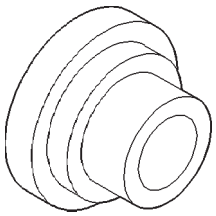

Installer, Bearign - 8128

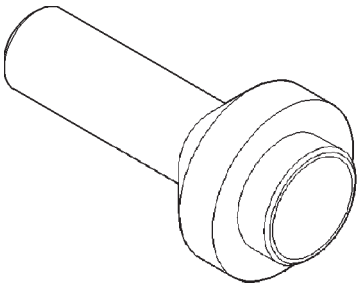

Installer, Seal - 7884

FRONT OUTPUT SHAFT SEAL

REMOVAL

(1) Raise vehicle on hoist.

(2) Remove front propeller shaft. (Refer to 3 - DIFFERENTIAL & DRIVELINE/PROPELLER SHAFT/ PROPELLER SHAFT - REMOVAL)

(3) Remove front output shaft companion shaft.

(4) Remove seal from front case with pry tool (Fig. 72).

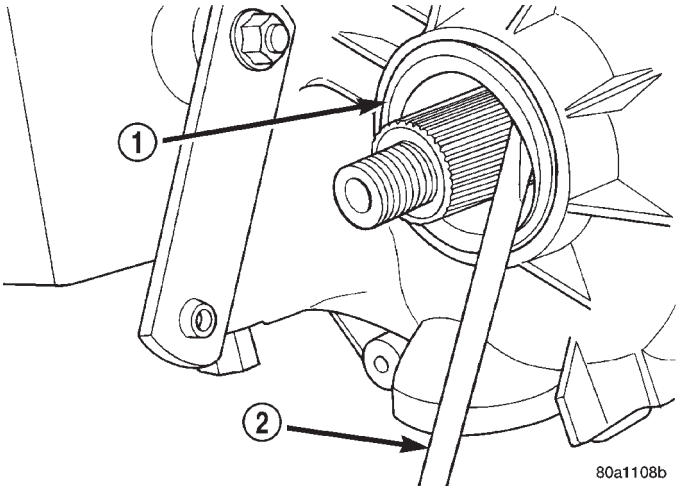

Fig. 72 Remove Front Output Shaft Seal

1 - OUTPUT SHAFT SEAL
2 - PRYBAR

INSTALLATION

(1) Install new front output seal in front case with Installer Tool 6952-A as follows:

(a) Place new seal on tool. Garter spring on seal goes toward interior of case.

(b) Start seal in bore with light taps from hammer (Fig. 73). Once seal is started, continue tapping seal into bore until installer tool seats against case.

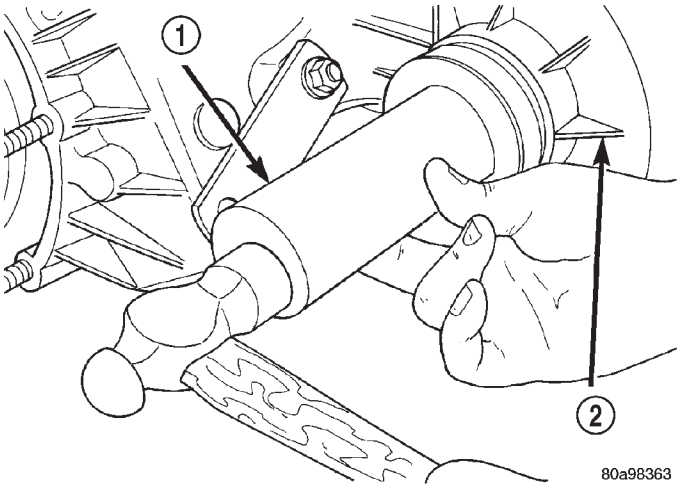

Fig. 73 Front Output Seal Installation

1 - INSTALLER 6952-A
2 - TRANSFER CASE

(2) Install companion flange and torque nut to 122-176 N·m (90-130 ft. lbs.).

(3) Install front propeller shaft. (Refer to 3 - DIFFERENTIAL & DRIVELINE/PROPELLER SHAFT/ PROPELLER SHAFT - INSTALLATION)

REAR RETAINER BUSHING AND SEAL

REMOVAL

(1) Raise vehicle on hoist.

(2) Remove rear propeller shaft. (Refer to 3 - DIFFERENTIAL & DRIVELINE/PROPELLER SHAFT/PROPELLER SHAFT - REMOVAL)

(3) Using a suitable pry tool or slide-hammer mounted screw, remove the rear retainer seal.

(4) Using Remover 6957, remove bushing from rear retainer (Fig. 74).

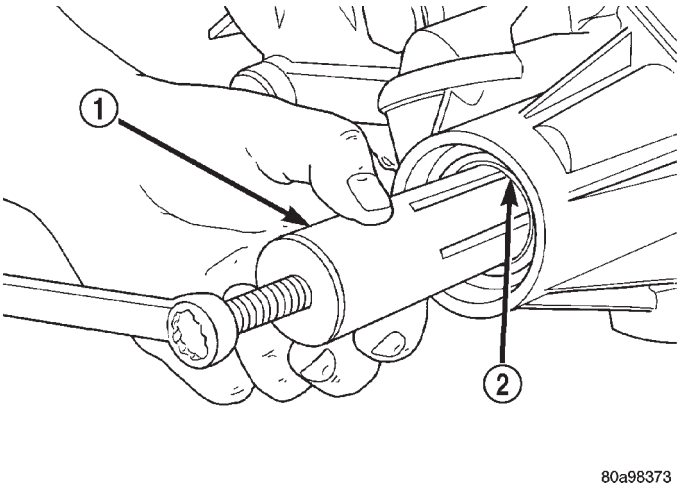

Fig. 74 Rear Retainer Bushing Removal

1 - REMOVER 6957
2 - REAR RETAINER BUSHING

INSTALLATION

(1) Clean fluid residue from sealing surface and inspect for defects.

(2) Position replacement bushing in rear retainer with fluid port in bushing aligned with slot in retainer.

(3) Using Installer 8145, drive bushing into retainer until installer seats against case (Fig. 75).

(4) Using Installer C-3995-A, install seal in rear retainer (Fig. 76).

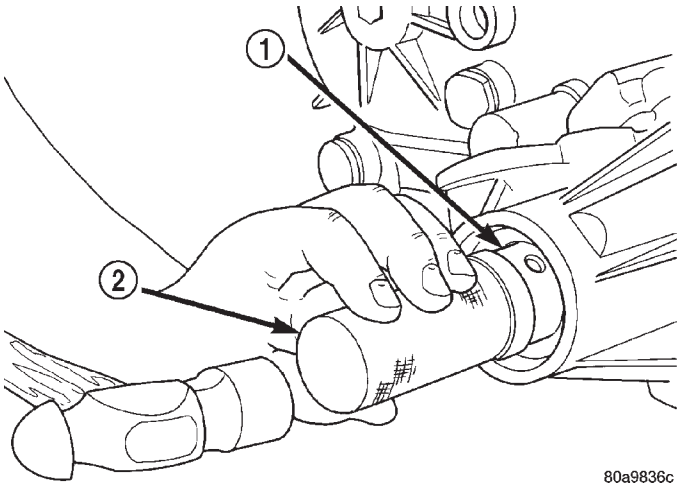

Fig. 75 Rear Retainer Bushing Installation

1 - REAR RETAINER BUSHING
2 - INSTALLER 8145

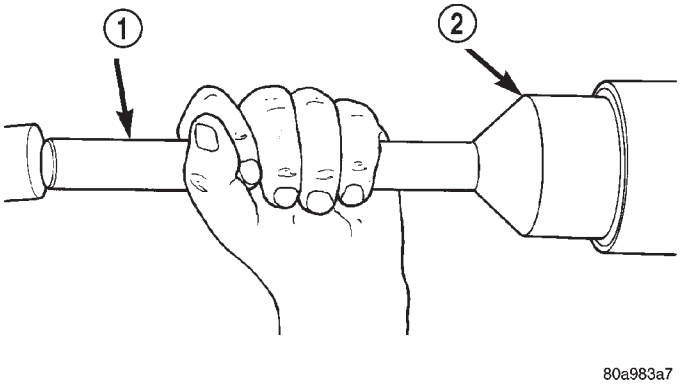

Fig. 76 Install Rear Retainer Seal

1 - SPECIAL TOOL C-4171
2 - SPECIAL TOOL C-3995-A

(5) Install rear propeller shaft. (Refer to 3 - DIFFERENTIAL & DRIVELINE/PROPELLER SHAFT/PROPELLER SHAFT - INSTALLATION)

(6) Verify proper fluid level.

(7) Lower vehicle.

SHIFT CABLE

REMOVAL

(1) Shift transfer case into NEUTRAL.
(2) Raise vehicle.
(3) Disconnect the shift cable eyelet from the transfer case shift lever (Fig. 77).
(4) Remove shift cable from the cable support bracket.

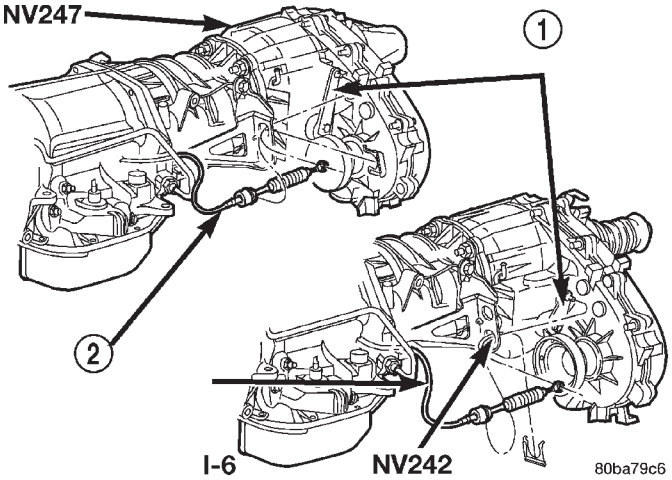

Fig. 77 Transfer Case Shift Cable at Transfer Case

1 - TRANSFER CASE SHIFT LEVER
2 - TRANSFER CASE SHIFT CABLE

(5) Lower vehicle.
(6) Remove any necessary console parts for access to shift lever assembly and shift cable.
(7) Disconnect cable at shift lever and shifter assembly bracket (Fig. 78).
(8) Remove the nuts holding the shift cable seal plate to the floor pan (Fig. 79).
(9) Pull cable through floor panel opening.
(10) Remove transfer case shift cable from vehicle.

INSTALLATION

(1) Route cable through hole in floor pan.
(2) Install seal plate to studs in floor pan.
(3) Install nuts to hold seal plate to floor pan (Fig. 79). Tighten nuts to 7 N·m (65 in.lbs.).
(4) Install the transfer case shift cable to the shifter assembly bracket. Seat cable in bracket and install clip (Fig. 78).
(5) Verify the transfer case shift lever (at console) is in the NEUTRAL position.
(6) Snap the cable onto the shift lever pin (Fig. 78).

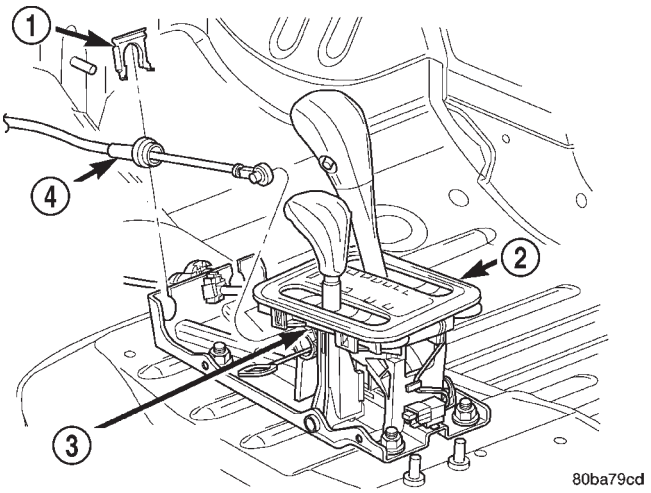

Fig. 78 Transfer Case Shift Cable at Shifter

1 - CLIP
2 - SHIFTER
3 - TRANSFER CASE SHIFT LEVER PIN
4 - TRANSFER CASE SHIFT CABLE

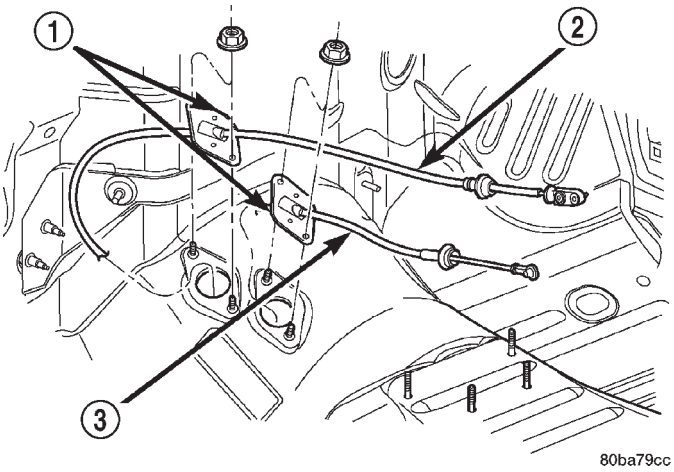

Fig. 79 Shift Cables at Floor Pan

1 - SEAL PLATES
2 - TRANSMISSION SHIFT CABLE
3 - TRANSFER CASE SHIFT CABLE

(7) Raise the vehicle.
(8) Install the shift cable to the shift cable support bracket and install clip (Fig. 77).
(9) Verify that the transfer case is still in the NEUTRAL position.
(10) Snap the shift cable onto the transfer case shift lever (Fig. 77).
(11) Lower vehicle.
(12) Verify correct transfer case operation in all ranges.
(13) Install any console parts removed for access to transfer case shift cable.

AUTOMATIC TRANSMISSION - 42RE

TABLE OF CONTENTS

page

AUTOMATIC TRANSMISSION - 42RE
DESCRIPTION . . . 66
OPERATION . . . 68
DIAGNOSIS AND TESTING . . . 71
AUTOMATIC TRANSMISSION . . . 71
PRELIMINARY DIAGNOSIS . . . 71
ROAD TESTING . . . 72
HYDRAULIC PRESSURE TEST . . . 74
AIR CHECKING TRANSMISSION CLUTCH AND BAND OPERATION . . . 77
CONVERTER HOUSING FLUID LEAK . . . 78
DIAGNOSIS CHARTS . . . 78
STANDARD PROCEDURE . . . 91
ALUMINUM THREAD REPAIR . . . 91
REMOVAL . . . 91
DISASSEMBLY . . . 93
CLEANING . . . 98
INSPECTION . . . 98
ASSEMBLY . . . 99
INSTALLATION . . . 105
SCHEMATICS AND DIAGRAMS . . . 107
SPECIFICATIONS . . . 119
SPECIAL TOOLS . . . 121
ACCUMULATOR
DESCRIPTION . . . 124
OPERATION . . . 124
INSPECTION . . . 125
BANDS
DESCRIPTION . . . 125
OPERATION . . . 125
ADJUSTMENTS . . . 126
BRAKE TRANSMISSION SHIFT INTERLOCK MECHANISM
DESCRIPTION . . . 127
OPERATION . . . 127
DIAGNOSIS AND TESTING . . . 127
BRAKE TRANSMISSION SHIFT INTERLOCK . 127
REMOVAL . . . 128
INSTALLATION . . . 128
ADJUSTMENTS . . . 129
ELECTRONIC GOVERNOR
DESCRIPTION . . . 130
OPERATION . . . 132
REMOVAL . . . 133
INSTALLATION . . . 134
EXTENSION HOUSING BUSHING
REMOVAL . . . 135
INSTALLATION . . . 135

page

EXTENSION HOUSING SEAL
REMOVAL . . . 135
INSTALLATION . . . 135
FLUID AND FILTER
DIAGNOSIS AND TESTING . . . 136
EFFECTS OF INCORRECT FLUID LEVEL . . . 136
CAUSES OF BURNT FLUID . . . 136
FLUID CONTAMINATION . . . 136
STANDARD PROCEDURE . . . 136
FLUID LEVEL CHECK . . . 136
FLUID AND FILTER REPLACEMENT . . . 137
TRANSMISSION FILL PROCEDURE . . . 139
FRONT CLUTCH
DESCRIPTION . . . 139
OPERATION . . . 139
DISASSEMBLY . . . 141
INSPECTION . . . 141
ASSEMBLY . . . 142
FRONT SERVO
DESCRIPTION . . . 143
OPERATION . . . 143
DISASSEMBLY . . . 144
CLEANING . . . 144
INSPECTION . . . 144
ASSEMBLY . . . 144
GEARSHIFT CABLE
DIAGNOSIS AND TESTING . . . 145
GEARSHIFT CABLE . . . 145
REMOVAL . . . 145
INSTALLATION . . . 146
ADJUSTMENTS . . . 146
OIL PUMP
DESCRIPTION . . . 147
OPERATION . . . 147
STANDARD PROCEDURE . . . 147
OIL PUMP VOLUME CHECK . . . 147
DISASSEMBLY . . . 148
CLEANING . . . 150
INSPECTION . . . 150
ASSEMBLY . . . 150
OUTPUT SHAFT FRONT BEARING
REMOVAL . . . 151
INSTALLATION . . . 152
OUTPUT SHAFT REAR BEARING
REMOVAL . . . 152
INSTALLATION . . . 152
OVERDRIVE CLUTCH
DESCRIPTION . . . 152
OPERATION . . . 152

OVERDRIVE OFF SWITCH
DESCRIPTION 153
OPERATION. 153
DIAGNOSIS AND TESTING 153
OVERDRIVE ELECTRICAL CONTROLS 153
OVERDRIVE UNIT
REMOVAL 153
DISASSEMBLY. 154
CLEANING 161
INSPECTION 161
ASSEMBLY 162
INSTALLATION. 171
OVERRUNNING CLUTCH CAM/OVERDRIVE PISTON RETAINER
DESCRIPTION 172
OPERATION. 172
DISASSEMBLY. 172
CLEANING 173
INSPECTION 173
ASSEMBLY 173
PARK/NEUTRAL POSITION SWITCH
DIAGNOSIS AND TESTING 175
PARK/NEUTRAL POSITION SWITCH 175
REMOVAL 175
INSTALLATION. 175
PISTONS
DESCRIPTION 175
OPERATION. 176
PLANETARY GEARTRAIN/OUTPUT SHAFT
DESCRIPTION 177
OPERATION. 177
DISASSEMBLY. 178
INSPECTION 178
ASSEMBLY 179
REAR CLUTCH
DESCRIPTION 183
OPERATION. 183
DISASSEMBLY. 184
CLEANING 184
INSPECTION 185
ASSEMBLY 185
REAR SERVO
DESCRIPTION 187
OPERATION. 187
DISASSEMBLY. 187
CLEANING 187
ASSEMBLY 188
SHIFT MECHANISM
DESCRIPTION 188
OPERATION. 188
REMOVAL 188
INSTALLATION. 189
SOLENOID
DESCRIPTION 190
OPERATION. 190
SPEED SENSOR
DESCRIPTION 191
OPERATION. 191
THROTTLE VALVE CABLE
DESCRIPTION 191
ADJUSTMENTS 191
TORQUE CONVERTER
DESCRIPTION 193
OPERATION. 197
REMOVAL 197
INSTALLATION. 198
TORQUE CONVERTER DRAINBACK VALVE
DESCRIPTION 198
OPERATION. 198
STANDARD PROCEDURE 198
TORQUE CONVERTER DRAINBACK VALVE. 198
TRANSMISSION TEMPERATURE SENSOR
DESCRIPTION 199
OPERATION. 199
VALVE BODY
DESCRIPTION 199
OPERATION. 204
REMOVAL 216
DISASSEMBLY. 217
CLEANING 229
INSPECTION 229
ASSEMBLY 230
INSTALLATION. 239
ADJUSTMENTS 239

AUTOMATIC TRANSMISSION - 42RE

DESCRIPTION

The 42RE is a four speed fully automatic transmission (Fig. 1) with an electronic governor. The 42RE is equipped with a lock-up clutch in the torque converter. First through third gear ranges are provided by the clutches, bands, overrunning clutch, and planetary gear sets in the transmission. Fourth gear range is provided by the overdrive unit that contains an overdrive clutch, direct clutch, planetary gear set, and overrunning clutch.

The transmission contains a front, rear, and direct clutch which function as the input driving components. They also contain the kickdown (front) and the low/reverse (rear) bands which, along with the overrunning clutch and overdrive clutch, serve as the holding components. The driving and holding components combine to select the necessary planetary gear components, in the front, rear, or overdrive planetary gear set, transfer the engine power from the input shaft through to the output shaft.

The valve body is mounted to the lower side of the transmission and contains the valves to control pressure regulation, fluid flow control, and clutch/band application. The oil pump is mounted at the front of the transmission and is driven by the torque converter hub. The pump supplies the oil pressure necessary for clutch/band actuation and transmission lubrication.

The 42RE transmission is cooled by an integral fluid cooler inside the radiator.

AUTOMATIC TRANSMISSION - 42RE (Continued)

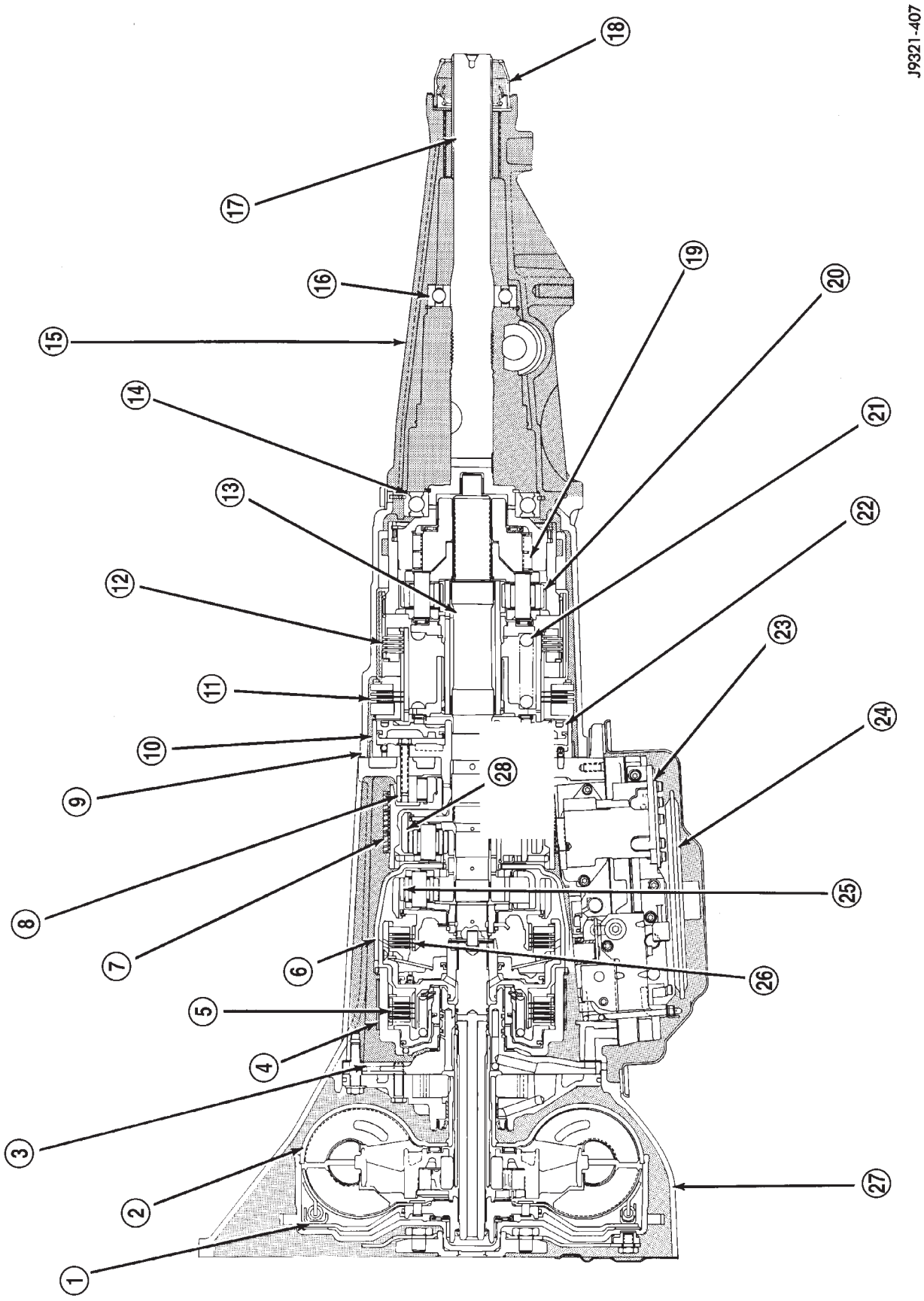

Fig. 1 42RE Transmission

AUTOMATIC TRANSMISSION - 42RE (Continued)

1 - CONVERTER CLUTCH
2 - TORQUE CONVERTER
3 - OIL PUMP AND REACTION SHAFT SUPPORT ASSEMBLY
4 - FRONT BAND
5 - FRONT CLUTCH
6 - DRIVING SHELL
7 - REAR BAND
8 - TRANSMISSION OVERRUNNING CLUTCH
9 - OVERDRIVE UNIT
10 - PISTON RETAINER
11 - OVERDRIVE CLUTCH
12 - DIRECT CLUTCH
13 - INTERMEDIATE SHAFT
14 - FRONT BEARING
15 - HOUSING
16 - REAR BEARING
17 - OUTPUT SHAFT
18 - SEAL
19 - OVERDRIVE OVERRUNNING CLUTCH
20 - OVERDRIVE PLANETARY GEAR
21 - DIRECT CLUTCH SPRING
22 - OVERDRIVE CLUTCH PISTON
23 - VALVE BODY ASSEMBLY
24 - FILTER
25 - FRONT PLANETARY GEAR
26 - REAR CLUTCH
27 - TRANSMISSION
28 - REAR PLANETARY GEAR

IDENTIFICATION

Transmission identification numbers are stamped on the left side of the case just above the oil pan gasket surface (Fig. 2). Refer to this information when ordering replacement parts.

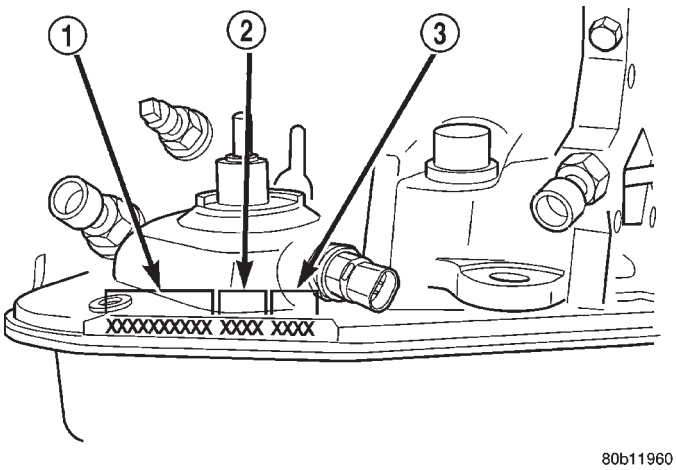

Fig. 2 Transmission Part And Serial Number Location

1 - PART NUMBER
2 - BUILD DATE
3 - SERIAL NUMBER

GEAR RATIOS The 42RE gear ratios are:

1st	2.74:1
2nd	1.54:1
3rd	1.00:1
4th	0.69:1
Rev.	2.21:1

OPERATION

The application of each driving or holding component is controlled by the valve body based upon the manual lever position and governor pressure. The governor pressure is a variable pressure input to the valve body and is one of the signals that a shift is necessary. First through fourth gear are obtained by selectively applying and releasing the different clutches and bands. Engine power is thereby routed to the various planetary gear assemblies which combine with the overrunning clutch assemblies to generate the different gear ratios. The torque converter clutch is hydraulically applied and is released when fluid is vented from the hydraulic circuit by the torque converter control (TCC) solenoid on the valve body. The torque converter clutch is controlled by the Powertrain Control Module (PCM). The torque converter clutch engages in fourth gear, and in third gear when the O/D switch is OFF, when the vehicle is cruising on a level surface after the vehicle has warmed up. The torque converter clutch will disengage momentarily when an increase in engine load is sensed by the PCM, such as when the vehicle begins to go uphill or the throttle pressure is increased. The torque converter clutch feature increases fuel economy and reduces the transmission fluid temperature.

Since the overdrive clutch is applied in fourth gear only and the direct clutch is applied in all ranges except fourth gear, the transmission operation for park, neutral, and first through third gear will be described first. Once these powerflows are described, the third to fourth shift sequence will be described.

PARK POWERFLOW

As the engine is running and the crankshaft is rotating, the flexplate and torque converter, which are also bolted to it, are all rotating in a clockwise direction as viewed from the front of the engine. The notched hub of the torque converter is connected to the oil pump's internal gear, supplying the transmission with oil pressure. As the converter turns, it turns the input shaft in a clockwise direction. As the input shaft is rotating, the front clutch hub-rear clutch retainer and all their associated parts are also rotating, all being directly connected to the input shaft. The power flow from the engine through the front-clutch-hub and rear-clutch-retainer stops at the rear-clutch-retainer. Therefore, no power flow to the output shaft occurs because no clutches are applied.

AUTOMATIC TRANSMISSION - 42RE (Continued)

The only mechanism in use at this time is the parking sprag (Fig. 3), which locks the parking gear on the output shaft to the transmission case.

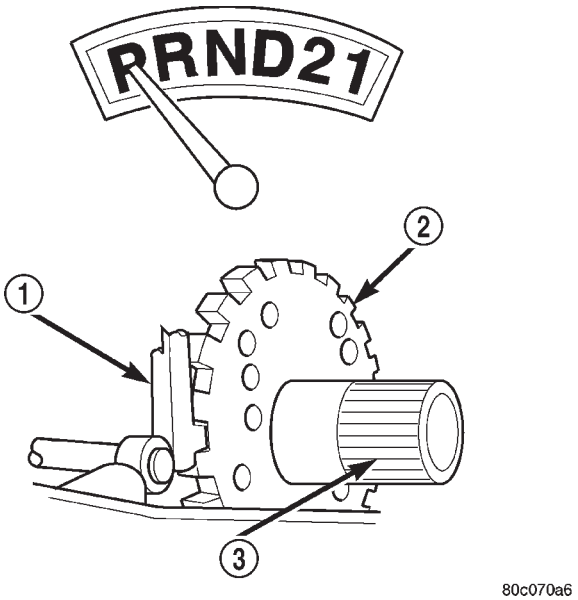

Fig. 3 Park Powerflow

1 - PAWL ENGAGED FOR PARK
2 - PARK SPRAG
3 - OUTPUT SHAFT

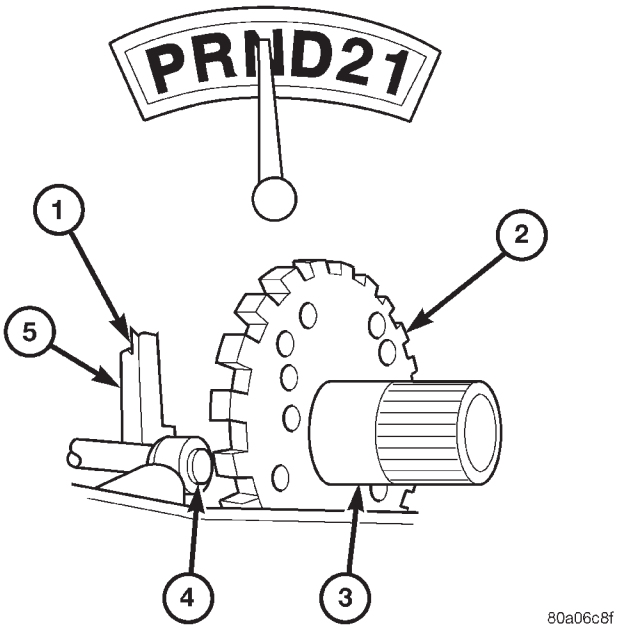

Fig. 4 Neutral Powerflow

1 - PAWL DISENGAGED FOR NEUTRAL
2 - PARK SPRAG
3 - OUTPUT SHAFT
4 - CAM
5 - PAWL

NEUTRAL POWERFLOW

With the gear selector in the NEUTRAL position (Fig. 4), the power flow of the transmission is essentially the same as in the park position. The only operational difference is that the parking sprag has been disengaged, unlocking the output shaft from the transmission case and allowing it to move freely.

REVERSE POWERFLOW

When the gear selector is moved into the REVERSE position (Fig. 5), the front clutch and the rear band are applied. With the application of the front clutch, engine torque is applied to the sun gear, turning it in a clockwise direction. The clockwise rotation of the sun gear causes the rear planet pinions to rotate against engine rotation in a counterclockwise direction. The rear band is holding the low reverse drum, which is splined to the rear carrier. Since the rear carrier is being held, the torque from the planet pinions is transferred to the rear annulus gear, which is splined to the output shaft. The output shaft in turn rotates with the annulus gear in a counterclockwise direction giving a reverse gear output. The entire transmission of torque is applied to the rear planetary gearset only. Although there is torque input to the front gearset through the sun gear, no other member of the gearset is being held. During the entire reverse stage of operation, the front planetary gears are in an idling condition.

FIRST GEAR POWERFLOW

When the gearshift lever is moved into the DRIVE position the transmission goes into first gear (Fig. 6). As soon as the transmission is shifted from PARK or NEUTRAL to DRIVE, the rear clutch applies, applying the rear clutch pack to the front annulus gear. Engine torque is now applied to the front annulus gear turning it in a clockwise direction. With the front annulus gear turning in a clockwise direction, it causes the front planets to turn in a clockwise direction. The rotation of the front planets cause the sun to revolve in a counterclockwise direction. The sun gear now transfers its counterclockwise rotation to the rear planets which rotate back in a clockwise direction. With the rear annulus gear stationary, the rear planet rotation on the annulus gear causes the rear planet carrier to revolve in a counterclockwise direction. The rear planet carrier is splined into the low-reverse drum, and the low reverse drum is splined to the inner race of the over-running clutch. With the over-running clutch locked, the planet carrier is held, and the resulting torque provided by the planet pinions is transferred to the rear annulus gear. The rear annulus gear is splined to the output shaft and rotated along with it (clockwise) in an underdrive gear reduction mode.

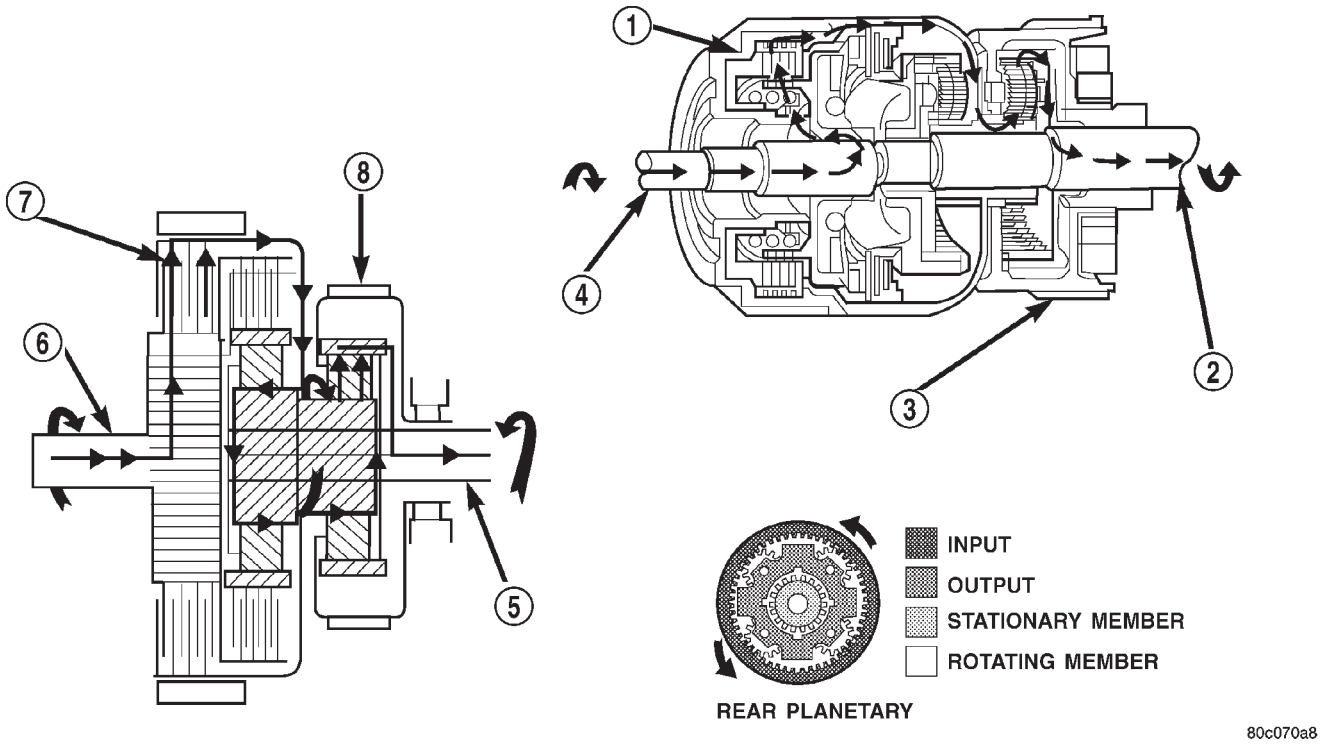

Fig. 5 Reverse Powerflow

1 - FRONT CLUTCH ENGAGED
2 - OUTPUT SHAFT
3 - LOW/REVERSE BAND APPLIED
4 - INPUT SHAFT
5 - OUTPUT SHAFT
6 - INPUT SHAFT
7 - FRONT CLUTCH ENGAGED
8 - LOW/REVERSE BAND APPLIED

SECOND GEAR POWERFLOW

In DRIVE-SECOND (Fig. 7), the same elements are applied as in MANUAL-SECOND. Therefore, the power flow will be the same, and both gears will be discussed as one in the same. In DRIVE-SECOND, the transmission has proceeded from first gear to its shift point, and is shifting from first gear to second. The second gear shift is obtained by keeping the rear clutch applied and applying the front (kickdown) band. The front band holds the front clutch retainer that is locked to the sun gear driving shell. With the rear clutch still applied, the input is still on the front annulus gear turning it clockwise at engine speed. Now that the front band is holding the sun gear stationary, the annulus rotation causes the front planets to rotate in a clockwise direction. The front carrier is then also made to rotate in a clockwise direction but at a reduced speed. This will transmit the torque to the output shaft, which is directly connected to the front planet carrier. The rear planetary annulus gear will also be turning because it is directly splined to the output shaft. All power flow has occurred in the front planetary gear set during the drive-second stage of operation, and now the over-running clutch, in the rear of the transmission, is disengaged and freewheeling on its hub.

DIRECT DRIVE POWERFLOW

The vehicle has accelerated and reached the shift point for the 2-3 upshift into direct drive (Fig. 8). When the shift takes place, the front band is released, and the front clutch is applied. The rear clutch stays applied as it has been in all the forward gears. With the front clutch now applied, engine torque is now on the front clutch retainer, which is locked to the sun gear driving shell. This means that the sun gear is now turning in engine rotation (clockwise) and at engine speed. The rear clutch is still applied so engine torque is also still on the front annulus gear. If two members of the same planetary set are driven, direct drive results. Therefore, when two members are rotating at the same speed and in the same direction, it is the same as being locked up. The rear planetary set is also locked up, given the sun gear is still the input, and the rear annulus gear must turn with the output shaft. Both gears are turning in the same direction and at the same speed. The front and rear planet pinions do not turn at all in direct drive. The only rotation is the input from the engine to the connected parts, which are acting as one common unit, to the output shaft.

AUTOMATIC TRANSMISSION - 42RE (Continued)

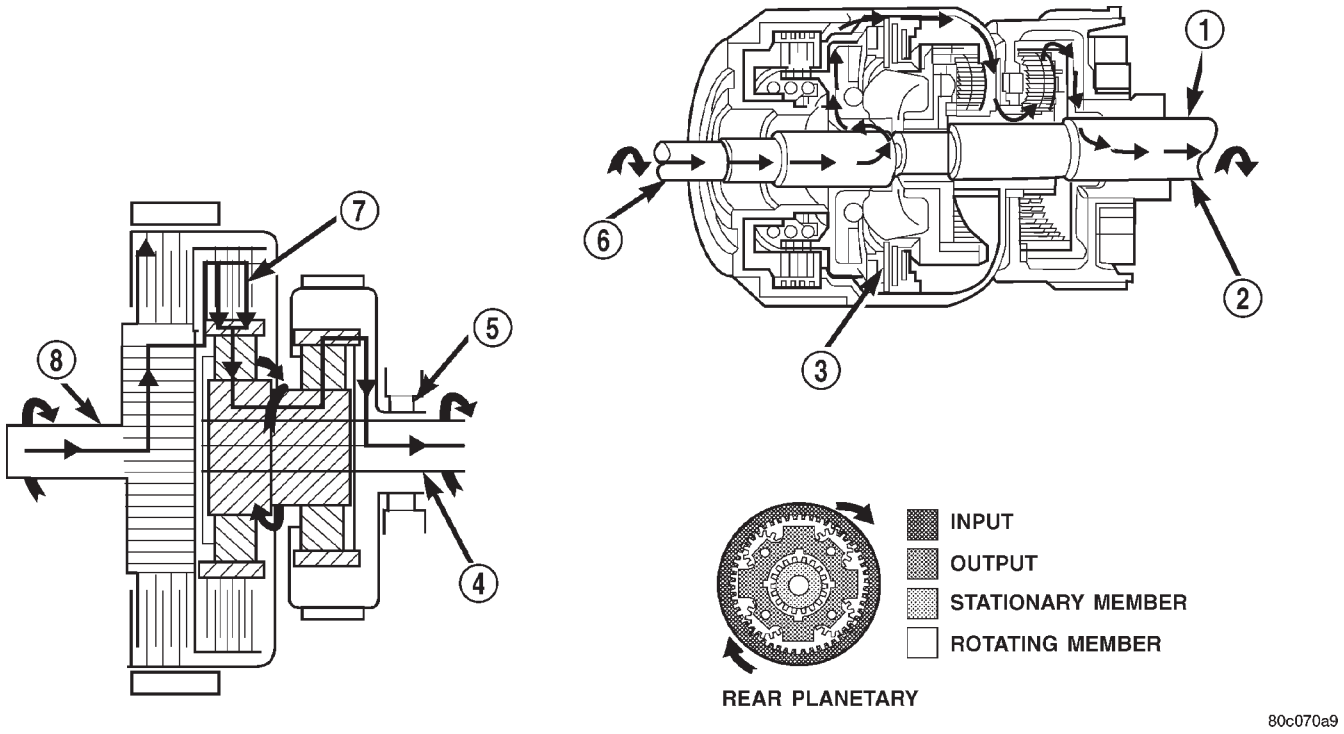

Fig. 6 First Gear Powerflow

1 - OUTPUT SHAFT
2 - OVER-RUNNING CLUTCH HOLDING
3 - REAR CLUTCH APPLIED
4 - OUTPUT SHAFT
5 - OVER-RUNNING CLUTCH HOLDING
6 - INPUT SHAFT
7 - REAR CLUTCH APPLIED
8 - INPUT SHAFT

FOURTH GEAR POWERFLOW

Fourth gear overdrive range is electronically controlled and hydraulically activated. Various sensor inputs are supplied to the powertrain control module to operate the overdrive solenoid on the valve body. The solenoid contains a check ball that opens and closes a vent port in the 3-4 shift valve feed passage. The overdrive solenoid (and check ball) are not energized in first, second, third, or reverse gear. The vent port remains open, diverting line pressure from the 2-3 shift valve away from the 3-4 shift valve. The overdrive control switch must be in the ON position to transmit overdrive status to the PCM. A 3-4 upshift occurs only when the overdrive solenoid is energized by the PCM. The PCM energizes the overdrive solenoid during the 3-4 upshift. This causes the solenoid check ball to close the vent port allowing line pressure from the 2-3 shift valve to act directly on the 3-4 upshift valve. Line pressure on the 3-4 shift valve overcomes valve spring pressure moving the valve to the upshift position. This action exposes the feed passages to the 3-4 timing valve, 3-4 quick fill valve, 3-4 accumulator, and ultimately to the overdrive piston. Line pressure through the timing valve moves the overdrive piston into contact with the overdrive clutch. The direct clutch is disengaged before the overdrive clutch is engaged. The boost valve provides increased fluid apply pressure to the overdrive clutch during 3-4 upshifts, and when accelerating in fourth gear. The 3-4 accumulator cushions overdrive clutch engagement to smooth 3-4 upshifts. The accumulator is charged at the same time as apply pressure acts against the overdrive piston.

DIAGNOSIS AND TESTING - AUTOMATIC TRANSMISSION

Automatic transmission problems can be a result of poor engine performance, incorrect fluid level, incorrect linkage or cable adjustment, band or hydraulic control pressure adjustments, hydraulic system malfunctions or electrical/mechanical component malfunctions. Begin diagnosis by checking the easily accessible items such as: fluid level and condition, linkage adjustments and electrical connections. A road test will determine if further diagnosis is necessary.

DIAGNOSIS AND TESTING - PRELIMINARY

Two basic procedures are required. One procedure for vehicles that are drivable and an alternate procedure for disabled vehicles (will not back up or move forward).

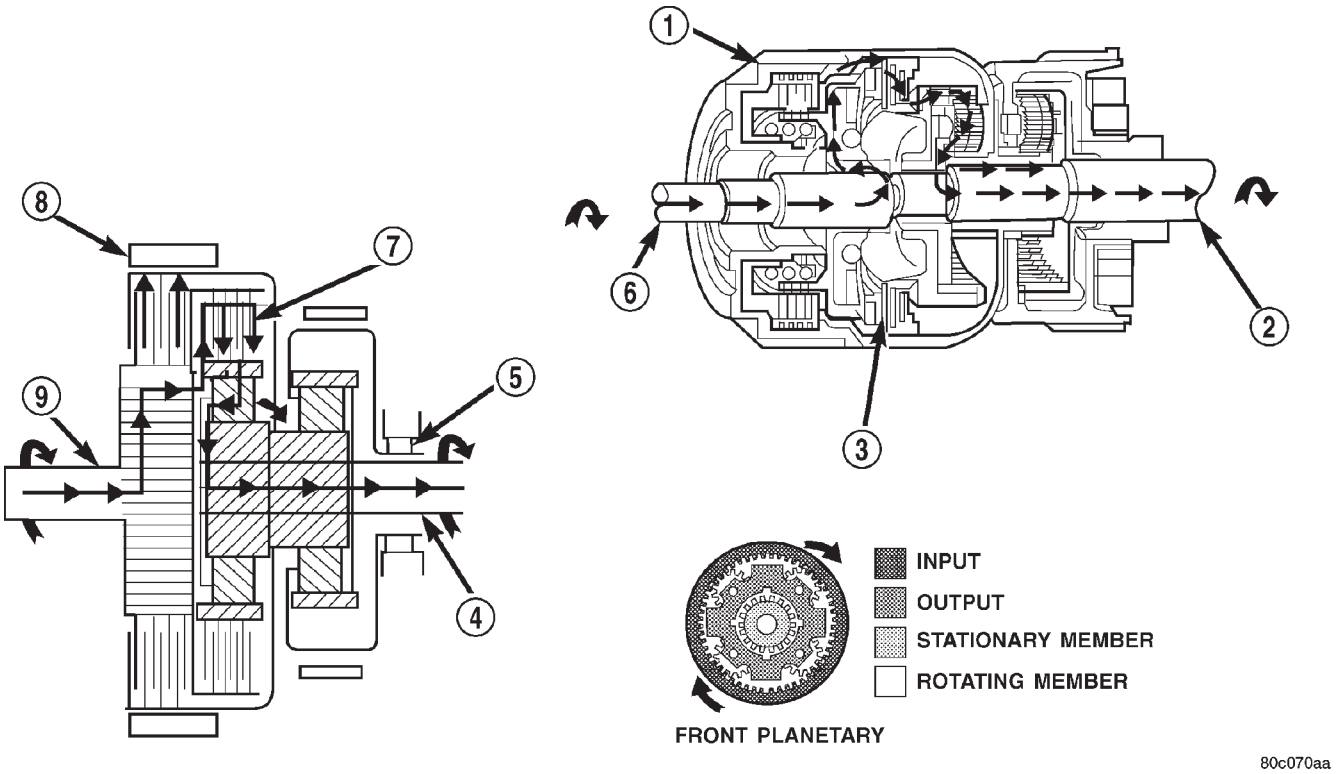

Fig. 7 Second Gear Powerflow

1 - KICKDOWN BAND APPLIED
2 - OUTPUT SHAFT
3 - REAR CLUTCH ENGAGED
4 - OUTPUT SHAFT
5 - OVER-RUNNING CLUTCH FREE-WHEELING
6 - INPUT SHAFT
7 - REAR CLUTCH APPLIED
8 - KICKDOWN BAND APPLIED
9 - INPUT SHAFT

VEHICLE IS DRIVEABLE

(1) Check for transmission fault codes using DRB® scan tool.

(2) Check fluid level and condition.

(3) Adjust throttle and gearshift linkage if complaint was based on delayed, erratic, or harsh shifts.

(4) Road test and note how transmission upshifts, downshifts, and engages.

(5) Perform stall test if complaint is based on sluggish acceleration. Or, if abnormal throttle opening is needed to maintain normal speeds with a properly tuned engine.

(6) Perform hydraulic pressure test if shift problems were noted during road test.

(7) Perform air-pressure test to check clutch-band operation.

VEHICLE IS DISABLED

(1) Check fluid level and condition.

(2) Check for broken or disconnected gearshift or throttle linkage.

(3) Check for cracked, leaking cooler lines, or loose or missing pressure-port plugs.

(4) Raise and support vehicle on safety stands, start engine, shift transmission into gear, and note following:

(a) If propeller shaft turns but wheels do not, problem is with differential or axle shafts.

(b) If propeller shaft does not turn and transmission is noisy, stop engine. Remove oil pan, and check for debris. If pan is clear, remove transmission and check for damaged drive plate, converter, oil pump, or input shaft.

(c) If propeller shaft does not turn and transmission is not noisy, perform hydraulic-pressure test to determine if problem is hydraulic or mechanical.

DIAGNOSIS AND TESTING - ROAD TESTING

Before road testing, be sure the fluid level and control cable adjustments have been checked and adjusted if necessary. Verify that diagnostic trouble codes have been resolved.

Observe engine performance during the road test. A poorly tuned engine will not allow accurate analysis of transmission operation.

Operate the transmission in all gear ranges. Check for shift variations and engine flare which indicates

AUTOMATIC TRANSMISSION - 42RE (Continued)

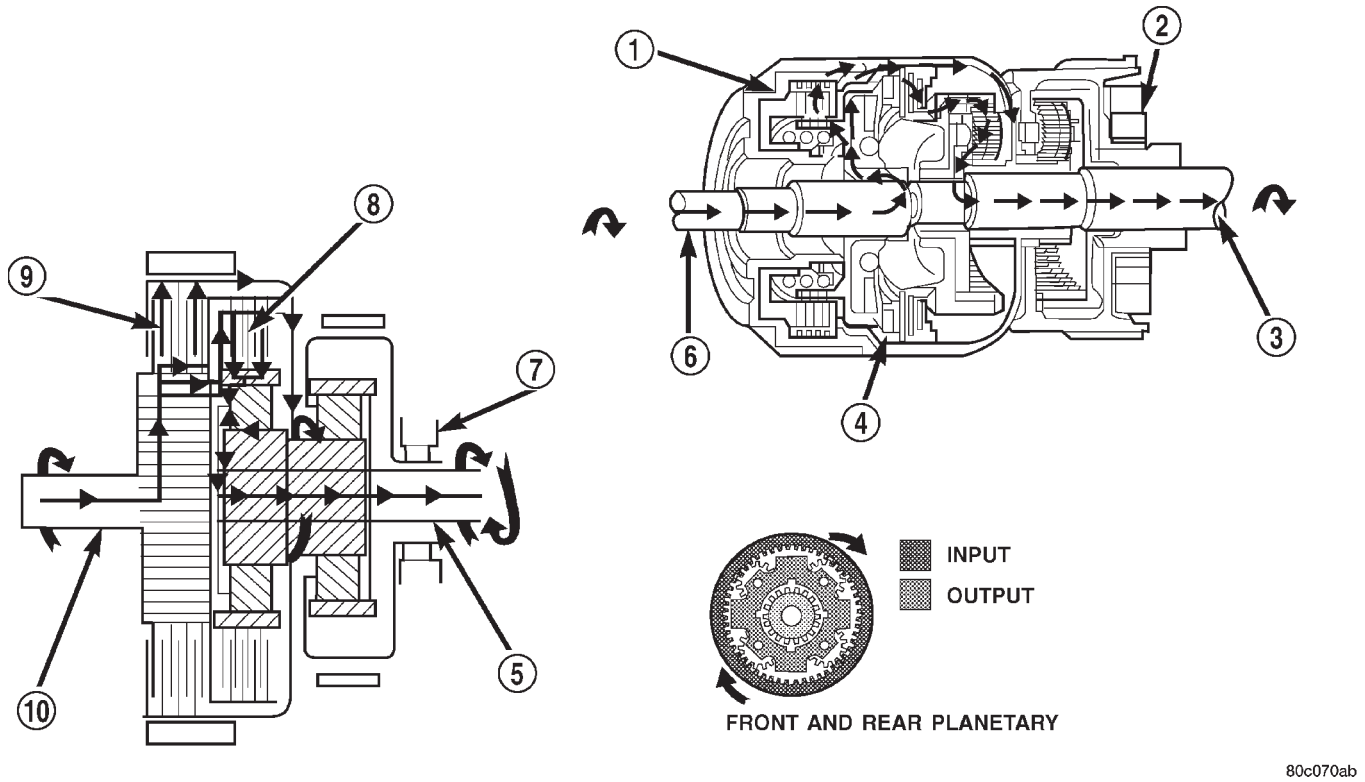

Fig. 8 Direct Drive Powerflow

1 - FRONT CLUTCH APPLIED
2 - OVER-RUNNING CLUTCH FREE-WHEELING
3 - OUTPUT SHAFT
4 - REAR CLUTCH APPLIED
5 - OUTPUT SHAFT
6 - INPUT SHAFT
7 - OVER-RUNNING CLUTCH FREE-WHEELING
8 - REAR CLUTCH APPLIED
9 - FRONT CLUTCH APPLIED
10 - INPUT SHAFT

slippage. Note if shifts are harsh, spongy, delayed, early, or if part throttle downshifts are sensitive.

Slippage indicated by engine flare, usually means clutch, band or overrunning clutch problems. If the condition is advanced, an overhaul will be necessary to restore normal operation.

A slipping clutch or band can often be determined by comparing which internal units are applied in the various gear ranges. The Clutch and Band Application chart provides a basis for analyzing road test results.

AUTOMATIC TRANSMISSION - 42RE (Continued)

CLUTCH AND BAND APPLICATION CHART

SHIFT LEVER POSITION	TRANSMISSION CLUTCHES AND BANDS					OVERDRIVE CLUTCHES		
	FRONT CLUTCH	FRONT BAND	REAR CLUTCH	REAR BAND	OVER-RUNNING CLUTCH	OVERDRIVE CLUTCH	DIRECT CLUTCH	OVER-RUNNING CLUTCH
Reverse	X			X			X	
Drive - First			X		X		X	X
Drive - Second		X	X				X	X
Drive - Third	X		X				X	X
Drive - Fourth	X		X			X		
Manual Second		X	X		X		X	X
Manual First			X	X	X		X	X

Note that the rear clutch is applied in all forward ranges (D, 2, 1). The transmission overrunning clutch is applied in first gear (D, 2 and 1 ranges) only. The rear band is applied in 1 and R range only.

Note that the overdrive clutch is applied only in fourth gear and the overdrive direct clutch and overrunning clutch are applied in all ranges except fourth gear.

For example: If slippage occurs in first gear in D and 2 range but not in 1 range, the transmission overrunning clutch is faulty. Similarly, if slippage occurs in any two forward gears, the rear clutch is slipping.

Applying the same method of analysis, note that the front and rear clutches are applied simultaneously only in D range third and fourth gear. If the transmission slips in third gear, either the front clutch or the rear clutch is slipping.

If the transmission slips in fourth gear but not in third gear, the overdrive clutch is slipping. By selecting another gear which does not use these clutches, the slipping unit can be determined. For example, if the transmission also slips in Reverse, the front clutch is slipping. If the transmission does not slip in Reverse, the rear clutch is slipping.

If slippage occurs during the 3-4 shift or only in fourth gear, the overdrive clutch is slipping. Similarly, if the direct clutch were to fail, the transmission would lose both reverse gear and overrun braking in 2 position (manual second gear).

If the transmission will not shift to fourth gear, the control switch, overdrive solenoid or related wiring may also be the problem cause.

This process of elimination can be used to identify a slipping unit and check operation. Proper use of the Clutch and Band Application Chart is the key.

Although road test analysis will help determine the slipping unit, the actual cause of a malfunction usually cannot be determined until hydraulic and air pressure tests are performed. Practically any condition can be caused by leaking hydraulic circuits or sticking valves.

Unless a malfunction is obvious, such as no drive in D range first gear, do not disassemble the transmission. Perform the hydraulic and air pressure tests to help determine the probable cause.

DIAGNOSIS AND TESTING - HYDRAULIC PRESSURE TEST

Hydraulic test pressures range from a low of one psi (6.895 kPa) governor pressure, to 300 psi (2068 kPa) at the rear servo pressure port in reverse.

An accurate tachometer and pressure test gauges are required. Test Gauge C-3292 has a 100 psi range and is used at the accumulator, governor, and front servo ports. Test Gauge C-3293-SP has a 300 psi range and is used at the rear servo and overdrive ports where pressures exceed 100 psi.

Pressure Test Port Locations

Test ports are located at both sides of the transmission case (Fig. 9).

Line pressure is checked at the accumulator port on the right side of the case. The front servo pressure port is at the right side of the case just behind the filler tube opening.

AUTOMATIC TRANSMISSION - 42RE (Continued)

The rear servo and governor pressure ports are at the right rear of the transmission case. The overdrive clutch pressure port is at the left rear of the case.

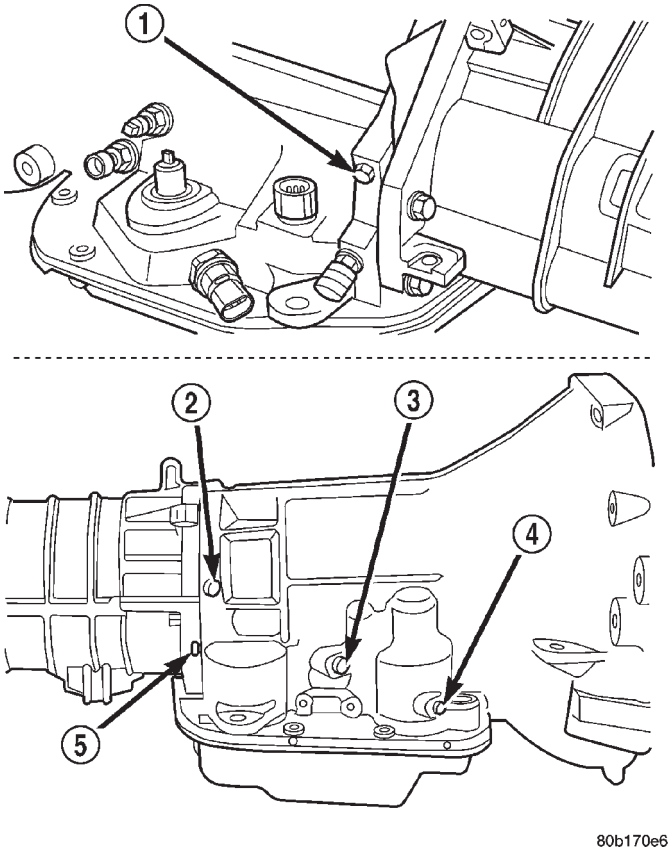

Fig. 9 Pressure Test Port Locations

1 - OVERDRIVE CLUTCH TEST PORT
2 - GOVERNOR TEST PORT
3 - ACCUMULATOR TEST PORT
4 - FRONT SERVO TEST PORT
5 - REAR SERVO TEST PORT

Test One - Transmission In Manual Low

NOTE: This test checks pump output, pressure regulation, and condition of the rear clutch and servo circuit. Both test gauges are required for this test.

(1) Connect tachometer to engine. Position tachometer so it can be observed from driver seat if helper will be operating engine. Raise vehicle on hoist that will allow rear wheels to rotate freely.

(2) Connect 100 psi Gauge C-3292 to accumulator port. Then connect 300 psi Gauge C-3293-SP to rear servo port.

(3) Disconnect throttle and gearshift cables from levers on transmission valve body manual shaft.

(4) Have helper start and run engine at 1000 rpm.

(5) Move transmission shift lever fully forward into 1 range.

(6) Gradually move transmission throttle lever from full forward to full rearward position and note pressures on both gauges:

- Line pressure at accumulator port should be 54-60 psi (372-414 kPa) with throttle lever forward and gradually increase to 90-96 psi (621-662 kPa) as throttle lever is moved rearward.
- Rear servo pressure should be same as line pressure within 3 psi (20.68 kPa).

Test Two - Transmission In 2 Range

NOTE: This test checks pump output, line pressure and pressure regulation. Use 100 psi Test Gauge C-3292 for this test.

(1) Leave vehicle in place on hoist and leave Test Gauge C-3292 connected to accumulator port.

(2) Have helper start and run engine at 1000 rpm.

(3) Move transmission shift lever one detent rearward from full forward position. This is 2 range.

(4) Move transmission throttle lever from full forward to full rearward position and read pressure on gauge.

(5) Line pressure should be 54-60 psi (372-414 kPa) with throttle lever forward and gradually increase to 90-96 psi (621-662 kPa) as lever is moved rearward.

Test Three - Transmission In D Range Third Gear

NOTE: This test checks pressure regulation and condition of the clutch circuits. Both test gauges are required for this test.

(1) Turn OD switch off.

(2) Leave vehicle on hoist and leave Gauge C-3292 in place at accumulator port.

(3) Move Gauge C-3293-SP over to front servo port for this test.

(4) Have helper start and run engine at 1600 rpm for this test.

(5) Move transmission shift lever two detents rearward from full forward position. This is D range.

(6) Read pressures on both gauges as transmission throttle lever is gradually moved from full forward to full rearward position:

- Line pressure at accumulator in D range third gear, should be 54-60 psi (372-414 kPa) with throttle lever forward and increase as lever is moved rearward.
- Front servo pressure in D range third gear, should be within 3 psi (21 kPa) of line pressure up to kickdown point.

AUTOMATIC TRANSMISSION - 42RE (Continued)

Test Four - Transmission In Reverse

NOTE: This test checks pump output, pressure regulation and the front clutch and rear servo circuits. Use 300 psi Test Gauge C-3293-SP for this test.

(1) Leave vehicle on hoist and leave gauge C-3292 in place at accumulator port.

(2) Move 300 psi Gauge C-3293-SP back to rear servo port.

(3) Have helper start and run engine at 1600 rpm for test.

(4) Move transmission shift lever four detents rearward from full forward position. This is Reverse range.

(5) Move transmission throttle lever fully forward then fully rearward and note reading at Gauge C-3293-SP.

(6) Pressure should be 145 - 175 psi (1000-1207 kPa) with throttle lever forward and increase to 230 - 280 psi (1586-1931 kPa) as lever is gradually moved rearward.

Test Five - Governor Pressure

NOTE: This test checks governor operation by measuring governor pressure response to changes in vehicle speed. It is usually not necessary to check governor operation unless shift speeds are incorrect or if the transmission will not downshift. The test should be performed on the road or on a hoist that will allow the rear wheels to rotate freely.

(1) Move 100 psi Test Gauge C-3292 to governor pressure port.

(2) Move transmission shift lever two detents rearward from full forward position. This is D range.

(3) Have helper start and run engine at curb idle speed. Then firmly apply service brakes so wheels will not rotate.

(4) Note governor pressure:

- Governor pressure should be no more than 20.6 kPa (3 psi) at curb idle speed and wheels not rotating.
- If pressure exceeds 20.6 kPa (3 psi), a fault exists in governor pressure control system.

(5) Release brakes, slowly increase engine speed, and observe speedometer and pressure test gauge (do not exceed 30 mph on speedometer). Governor pressure should increase in proportion to vehicle speed. Or approximately 6.89 kPa (1 psi) for every 1 mph.

(6) Governor pressure rise should be smooth and drop back to no more than 20.6 kPa (3 psi), after engine returns to curb idle and brakes are applied to prevent wheels from rotating.

(7) Compare results of pressure test with analysis chart.

Test Six - Transmission In Overdrive Fourth Gear

NOTE: This test checks line pressure at the overdrive clutch in fourth gear range. Use 300 psi Test Gauge C-3293-SP for this test. The test should be performed on the road or on a chassis dyno.

(1) Remove tachometer; it is not needed for this test.

(2) Move 300 psi Gauge to overdrive clutch pressure test port. Then remove other gauge and reinstall test port plug.

(3) Lower vehicle.

(4) Turn OD switch on.

(5) Secure test gauge so it can be viewed from drivers seat.

(6) Start engine and shift into D range.

(7) Increase vehicle speed gradually until 3-4 shift occurs and note gauge pressure.

(8) Pressure should be 469-496 kPa (68-72 psi) with closed throttle and increase to 620-827 kPa (90-120 psi) at 1/2 to 3/4 throttle. Note that pressure can increase to around 896 kPa (130 psi) at full throttle.

(9) Return to shop or move vehicle off chassis dyno.

AUTOMATIC TRANSMISSION - 42RE (Continued)

PRESSURE TEST ANALYSIS CHART

TEST CONDITION	INDICATION
Line pressure OK during any one test	Pump and regulator valve OK
Line pressure OK in R but low in D, 2, 1	Leakage in rear clutch area (seal rings, clutch seals)
Pressure low in D Fourth Gear Range	Overdrive clutch piston seal, or check ball problem
Pressure OK in 1, 2 but low in D3 and R	Leakage in front clutch area
Pressure OK in 2 but low in R and 1	Leakage in rear servo
Front servo pressure in 2	Leakage in servo; broken servo ring or cracked servo piston
Pressure low in all positions	Clogged filter, stuck regulator valve, worn or faulty pump, low oil level
Governor pressure too high at idle speed	Governor pressure solenoid valve system fault. Refer to diagnostic book.
Governor pressure low at all mph figures	Faulty governor pressure solenoid, transmission control module, or governor pressure sensor
Lubrication pressure low at all throttle positions	Clogged fluid cooler or lines, seal rings leaking, worn pump bushings, pump, clutch retainer, or clogged filter.
Line pressure high	Output shaft plugged, sticky regulator valve
Line pressure low	Sticky regulator valve, clogged filter, worn pump

DIAGNOSIS AND TESTING - AIR CHECKING TRANSMISSION CLUTCH AND BAND OPERATION

Air-pressure testing can be used to check transmission front/rear clutch and band operation. The test can be conducted with the transmission either in the vehicle or on the work bench, as a final check, after overhaul.

Air-pressure testing requires that the oil pan and valve body be removed from the transmission. The servo and clutch apply passages are shown (Fig. 10).

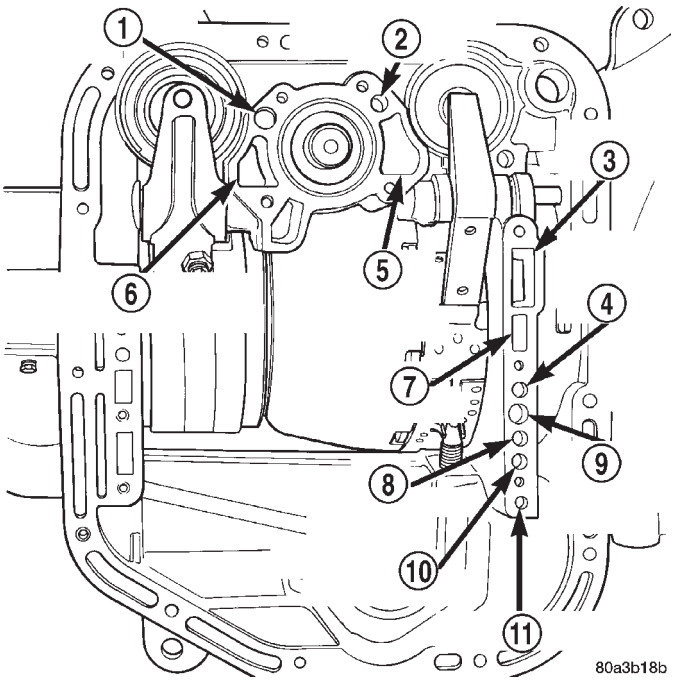

Fig. 10 Air Pressure Test Passages

1 - REAR SERVO APPLY
2 - FRONT SERVO APPLY
3 - PUMP SUCTION
4 - FRONT CLUTCH APPLY
5 - FRONT SERVO RELEASE
6 - LINE PRESSURE TO ACCUMULATOR
7 - PUMP PRESSURE
8 - TO CONVERTER
9 - REAR CLUTCH APPLY
10 - FROM CONVERTER
11 - TO COOLER

Front Clutch Air Test

Place one or two fingers on the clutch housing and apply air pressure through front clutch apply passage. Piston movement can be felt and a soft thump heard as the clutch applies.

Rear Clutch Air Test

Place one or two fingers on the clutch housing and apply air pressure through rear clutch apply passage. Piston movement can be felt and a soft thump heard as the clutch applies.

Front Servo Apply Air Test

Apply air pressure to the front servo apply passage. The servo rod should extend and cause the band to tighten around the drum. Spring pressure should release the servo when air pressure is removed.

Rear Servo Air Test

Apply air pressure to the rear servo apply passage. The servo rod should extend and cause the band to tighten around the drum. Spring pressure should release the servo when air pressure is removed.

AUTOMATIC TRANSMISSION - 42RE (Continued)

DIAGNOSIS AND TESTING - CONVERTER HOUSING FLUID LEAK

When diagnosing converter housing fluid leaks, two items must be established before repair.

(1) Verify that a leak condition actually exists.

(2) Determined the true source of the leak.

Some suspected converter housing fluid leaks may not be leaks at all. They may only be the result of residual fluid in the converter housing, or excess fluid spilled during factory fill or fill after repair. Converter housing leaks have several potential sources. Through careful observation, a leak source can be identified before removing the transmission for repair. Pump seal leaks tend to move along the drive hub and onto the rear of the converter. Pump O-ring or pump body leaks follow the same path as a seal leak (Fig. 11). Pump vent or pump attaching bolt leaks are generally deposited on the inside of the converter housing and not on the converter itself (Fig. 11). Pump seal or gasket leaks usually travel down the inside of the converter housing. Front band lever pin plug leaks are generally deposited on the housing and not on the converter.

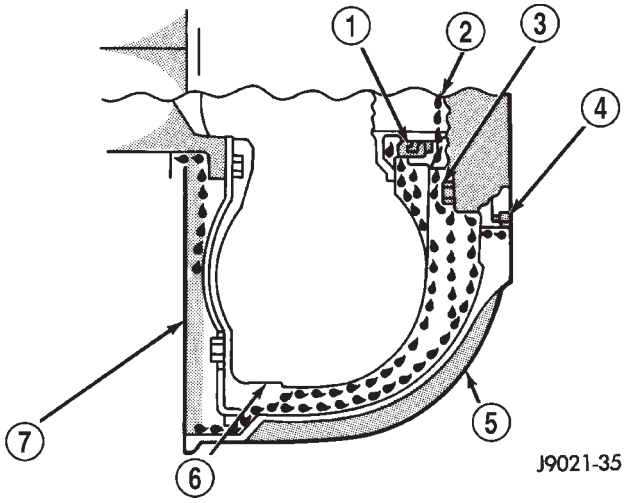

Fig. 11 Converter Housing Leak Paths

1 - PUMP SEAL
2 - PUMP VENT
3 - PUMP BOLT
4 - PUMP GASKET
5 - CONVERTER HOUSING
6 - CONVERTER
7 - REAR MAIN SEAL LEAK

TORQUE CONVERTER LEAK POINTS

Possible sources of converter leaks are:

(1) Leaks at the weld joint around the outside diameter weld (Fig. 12).

(2) Leaks at the converter hub weld (Fig. 12).

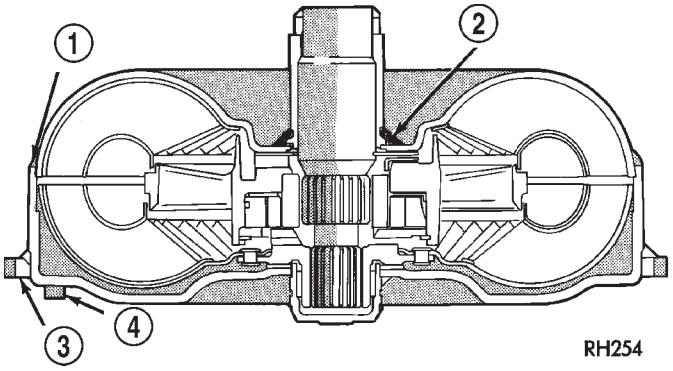

Fig. 12 Converter Leak Points - Typical

1 - OUTSIDE DIAMETER WELD
2 - TORQUE CONVERTER HUB WELD
3 - STARTER RING GEAR
4 - LUG

CONVERTER HOUSING AREA LEAK CORRECTION

(1) Remove converter.

(2) Tighten front band adjusting screw until band is tight around front clutch retainer. This prevents front/rear clutches from coming out when oil pump is removed.

(3) Remove oil pump and remove pump seal. Inspect pump housing drainback and vent holes for obstructions. Clear holes with solvent and wire.

(4) Inspect pump bushing and converter hub. If bushing is scored, replace it. If converter hub is scored, either polish it with crocus cloth or replace converter.

(5) Install new pump seal, O-ring, and gasket. Replace oil pump if cracked, porous or damaged in any way. Be sure to loosen the front band before installing the oil pump, damage to the oil pump seal may occur if the band is still tightened to the front clutch retainer.

(6) Loosen kickdown lever pin access plug three turns. Apply Loctite™ 592, or Permatex® No. 2 to plug threads and tighten plug to 17 N·m (150 in. lbs.) torque.

(7) Adjust front band.

(8) Lubricate pump seal and converter hub with transmission fluid or petroleum jelly and install converter.

(9) Install transmission and converter housing dust shield.

(10) Lower vehicle.

DIAGNOSIS AND TESTING - DIAGNOSIS CHARTS

The diagnosis charts provide additional reference when diagnosing a transmission fault. The charts provide general information on a variety of transmission, overdrive unit and converter clutch fault conditions.

AUTOMATIC TRANSMISSION - 42RE (Continued)

The hydraulic flow charts in the Schematics and Diagrams section of this group, outline fluid flow and hydraulic circuitry. Circuit operation is provided for PARK, NEUTRAL, FIRST, SECOND, THIRD, FOURTH, MANUAL FIRST, MANUAL SECOND, and REVERSE gear ranges. Normal working pressures are also supplied for each of the gear ranges.

DIAGNOSIS CHARTS

CONDITION	POSSIBLE CAUSES	CORRECTION
HARSH ENGAGEMENT (FROM NEUTRAL TO DRIVE OR REVERSE)	1. Fluid Level Low.	1. Add Fluid
	2. Throttle Linkage Mis-adjusted.	2. Adjust linkage - setting may be too long.
	3. Mount and Driveline Bolts Loose.	3. Check engine mount, transmission mount, propeller shaft, rear spring to body bolts, rear control arms, crossmember and axle bolt torque. Tighten loose bolts and replace missing bolts.
	4. U-Joint Worn/Broken.	4. Remove propeller shaft and replace U-Joint.
	5. Axle Backlash Incorrect.	5. Check per Service Manual. Correct as needed.
	6. Hydraulic Pressure Incorrect.	6. Check pressure. Remove, overhaul or adjust valve body as needed.
	7. Band Mis-adjusted.	7. Adjust rear band.
	8. Valve Body Check Balls Missing.	8. Inspect valve body for proper check ball installation.
	9. Axle Pinion Flange Loose.	9. Replace nut and check pinion threads before installing new nut. Replace pinion gear if threads are damaged.
	10. Clutch, band or planetary component damaged.	10. Remove, disassemble and repair transmission as necessary.
	11. Converter Clutch Faulty.	11. Replace converter and flush cooler and line before installing new converter.

AUTOMATIC TRANSMISSION - 42RE (Continued)

CONDITION	POSSIBLE CAUSES	CORRECTION
DELAYED ENGAGEMENT (FROM NEUTRAL TO DRIVE OR REVERSE)	1. Fluid Level Low.	1. Correct level and check for leaks.
	2. Filter Clogged.	2. Change filter.
	3. Gearshift Linkage Mis-adjusted.	3. Adjust linkage and repair linkage if worn or damaged.
	4. Torque Converter Drain Back (Oil drains from torque converter into transmission sump).	4. If vehicle moves normally after 5 seconds after shifting into gear, no repair is necessary. If longer, inspect pump bushing for wear. Replace pump house.
	5. Rear Band Mis-adjusted.	5. Adjust band.
	6. Valve Body Filter Plugged.	6. Replace fluid and filter. If oil pan and old fluid were full of clutch disc material and/or metal particles, overhaul will be necessary.
	7. Oil Pump Gears Worn/Damaged.	7. Remove transmission and replace oil pump.
	8. Governor Circuit and Solenoid Valve Electrical Fault.	8. Test with DRB® scan tool and repair as required.
	9. Hydraulic Pressure Incorrect.	9. Perform pressure test, remove transmission and repair as needed.
	10. Reaction Shaft Seal Rings Worn/Broken.	10. Remove transmission, remove oil pump and replace seal rings.
	11. Rear Clutch/Input Shaft, Rear Clutch Seal Rings Damaged.	11. Remove and disassemble transmission and repair as necessary.
	12. Regulator Valve Stuck.	12. Clean.
	13. Cooler Plugged.	13. Transfer case failure can plug cooler.
NO DRIVE RANGE (REVERSE OK)	1. Fluid Level Low.	1. Add fluid and check for leaks if drive is restored.
	2. Gearshift Linkage/Cable Loose/Misadjusted.	2. Repair or replace linkage components.
	3. Rear Clutch Burnt.	3. Remove and disassemble transmission and rear clutch and seals. Repair/replace worn or damaged parts as needed.
	4. Valve Body Malfunction.	4. Remove and disassemble valve body. Replace assembly if any valves or bores are damaged.
	5. Transmission Overrunning Clutch Broken.	5. Remove and disassemble transmission. Replace overrunning clutch.
	6. Input Shaft Seal Rings Worn/ Damaged.	6. Remove and disassemble transmission. Replace seal rings and any other worn or damaged parts.
	7. Front Planetary Failed Broken.	7. Remove and repair.

AUTOMATIC TRANSMISSION - 42RE (Continued)

CONDITION	POSSIBLE CAUSES	CORRECTION
NO DRIVE OR REVERSE (VEHICLE WILL NOT MOVE)	1. Fluid Level Low.	1. Add fluid and check for leaks if drive is restored.
	2. Gearshift Linkage/Cable Loose/Misadjusted.	2. Inspect, adjust and reassemble linkage as needed. Replace worn/damaged parts.
	3. U-Joint/Axle/Transfer Case Broken.	3. Perform preliminary inspection procedure for vehicle that will not move. Refer to procedure in diagnosis section.
	4. Filter Plugged.	4. Remove and disassemble transmission. Repair or replace failed components as needed. Replace filter. If filter and fluid contained clutch material or metal particles, an overhaul may be necessary. Perform lube flow test. Flush oil. Replace cooler as necessary.
	5. Oil Pump Damaged.	5. Perform pressure test to confirm low pressure. Replace pump body assembly if necessary.
	6. Valve Body Malfunctioned.	6. Check and inspect valve body. Replace valve body (as assembly) if any valve or bore is damaged. Clean and reassemble correctly if all parts are in good condition.
	7. Transmission Internal Component Damaged.	7. Remove and disassemble transmission. Repair or replace failed components as needed.
	8. Park Sprag not Releasing - Check Stall Speed, Worn/Damaged/Stuck.	8. Remove, disassemble, repair.
	9. Torque Converter Damage.	9. Inspect and replace as required.
SHIFTS DELAYED OR ERRATIC (SHIFTS ALSO HARSH AT TIMES)	1. Fluid Level Low/High.	1. Correct fluid level and check for leaks if low.
	2. Fluid Filter Clogged.	2. Replace filter. If filter and fluid contained clutch material or metal particles, an overhaul may be necessary. Perform lube flow test.
	3. Throttle Linkage Mis-adjusted.	3. Adjust linkage as described in service section.
	4. Throttle Linkage Binding.	4. Check cable for binding. Check for return to closed throttle at transmission.
	5. Gearshift Linkage/Cable Mis-adjusted.	5. Adjust linkage/cable as described in service section.
	6. Clutch or Servo Failure.	6. Remove valve body and air test clutch, and band servo operation. Disassemble and repair transmission as needed.
	7. Governor Circuit Electrical Fault.	7. Test using DRB® scan tool and repair as required.
	8. Front Band Mis-adjusted.	8. Adjust band.
	9. Pump Suction Passage Leak.	9. Check for excessive foam on dipstick after normal driving. Check for loose pump bolts, defective gasket. Replace pump assembly if needed.

AUTOMATIC TRANSMISSION - 42RE (Continued)

CONDITION	POSSIBLE CAUSES	CORRECTION
NO REVERSE (D RANGES OK)	1. Gearshift Linkage/Cable Mis-adjusted/Damaged.	1. Repair or replace linkage parts as needed.
	2. Park Sprag Sticking.	2. Replace overdrive annulus gear.
	3. Rear Band Mis-adjusted/Worn.	3. Adjust band; replace.
	4. Valve Body Malfunction.	4. Remove and service valve body. Replace valve body if any valves or valve bores are worn or damaged.
	5. Rear Servo Malfunction.	5. Remove and disassemble transmission. Replace worn/damaged servo parts as necessary.
	6. Direct Clutch in Overdrive Worn.	6. Disassemble overdrive. Replace worn or damaged parts.
	7. Front Clutch Burnt.	7. Remove and disassemble transmission. Replace worn, damaged clutch parts as required.
HAS FIRST/REVERSE ONLY (NO 1-2 OR 2-3 UPSHIFT)	1. Governor Circuit Electrical Fault.	1. Test using DRB® scan tool and repair as required.
	2. Valve Body Malfunction.	2. Repair stuck 1-2 shift valve or governor plug.
	3. Front Servo/Kickdown Band Damaged/Burned.	3. Repair/replace.
MOVES IN 2ND OR 3RD GEAR, ABRUPTLY DOWNSHIFTS TO LOW	1. Valve Body Malfunction.	1. Remove, clean and inspect. Look for stuck 1-2 valve or governor plug.
NO LOW GEAR (MOVES IN 2ND OR 3RD GEAR ONLY)	1. Governor Circuit Electrical Fault.	1. Test with DRB® scan tool and repair as required.
	2. Valve Body Malfunction.	2. Remove, clean and inspect. Look for sticking 1-2 shift valve, 2-3 shift valve, governor plug or broken springs.
	3. Front Servo Piston Cocked in Bore.	3. Inspect servo and repair as required.
	4. Front Band Linkage Malfunction	4. Inspect linkage and look for bind in linkage.

AUTOMATIC TRANSMISSION - 42RE (Continued)

CONDITION	POSSIBLE CAUSES	CORRECTION
NO KICKDOWN OR NORMAL DOWNSHIFT	1. Throttle Linkage Mis-adjusted.	1. Adjust linkage.
	2. Accelerator Pedal Travel Restricted.	2. Verify floor mat is not under pedal, repair worn accelerator cable or bent brackets.
	3. Valve Body Hydraulic Pressures Too High or Too Low Due to Valve Body Malfunction or Incorrect Hydraulic Control Pressure Adjustments.	3. Perform hydraulic pressure tests to determine cause and repair as required. Correct valve body pressure adjustments as required.
	4. Governor Circuit Electrical Fault.	4. Test with DRB® scan tool and repair as required.
	5. Valve Body Malfunction.	5. Perform hydraulic pressure tests to determine cause and repair as required. Correct valve body pressure adjustments as required.
	6. TPS Malfunction.	6. Replace sensor, check with DRB® scan tool.
	7. PCM Malfunction.	7. Check with DRB® scan tool and replace if required.
	8. Valve Body Malfunction.	8. Repair sticking 1-2, 2-3 shift valves, governor plugs, 3-4 solenoid, 3-4 shift valve, 3-4 timing valve.
STUCK IN LOW GEAR (WILL NOT UPSHIFT)	1. Throttle Linkage Mis-adjusted/ Stuck.	1. Adjust linkage and repair linkage if worn or damaged. Check for binding cable or missing return spring.
	2. Gearshift Linkage Mis-adjusted.	2. Adjust linkage and repair linkage if worn or damaged.
	3. Governor Component Electrical Fault.	3. Check operating pressures and test with DRB® scan tool, repair faulty component.
	4. Front Band Out of Adjustment.	4. Adjust Band.
	5. Clutch or Servo Malfunction.	5. Air pressure check operation of clutches and bands. Repair faulty component.
CREEPS IN NEUTRAL	1. Gearshift Linkage Mis-adjusted.	1. Adjust linkage.
	2. Rear Clutch Dragging/Warped.	2. Disassemble and repair.
	3. Valve Body Malfunction.	3. Perform hydraulic pressure test to determine cause and repair as required.

AUTOMATIC TRANSMISSION - 42RE (Continued)

CONDITION	POSSIBLE CAUSES	CORRECTION
BUZZING NOISE	1. Fluid Level Low	1. Add fluid and check for leaks.
	2. Shift Cable Mis-assembled.	2. Route cable away from engine and bell housing.
	3. Valve Body Mis-assembled.	3. Remove, disassemble, inspect valve body. Reassemble correctly if necessary. Replace assembly if valves or springs are damaged. Check for loose bolts or screws.
	4. Pump Passages Leaking.	4. Check pump for porous casting, scores on mating surfaces and excess rotor clearance. Repair as required. Loose pump bolts.
	5. Cooling System Cooler Plugged.	5. Flow check cooler circuit. Repair as needed.
	6. Overrunning Clutch Damaged.	6. Replace clutch.
SLIPS IN REVERSE ONLY	1. Fluid Level Low.	1. Add fluid and check for leaks.
	2. Gearshift Linkage Mis-adjusted.	2. Adjust linkage.
	3. Rear Band Mis-adjusted.	3. Adjust band.
	4. Rear Band Worn.	4. Replace as required.
	5. Overdrive Direct Clutch Worn.	5. Disassemble overdrive. Repair as needed.
	6. Hydraulic Pressure Too Low.	6. Perform hydraulic pressure tests to determine cause.
	7. Rear Servo Leaking.	7. Air pressure check clutch-servo operation and repair as required.
	8. Band Linkage Binding.	8. Inspect and repair as required.
SLIPS IN FORWARD DRIVE RANGES	1. Fluid Level Low.	1. Add fluid and check for leaks.
	2. Fluid Foaming.	2. Check for high oil level, bad pump gasket or seals, dirt between pump halves and loose pump bolts. Replace pump if necessary.
	3. Throttle Linkage Mis-adjusted.	3. Adjust linkage.
	4. Gearshift Linkage Mis-adjusted.	4. Adjust linkage.
	5. Rear Clutch Worn.	5. Inspect and replace as needed.
	6. Low Hydraulic Pressure Due to Worn Pump, Incorrect Control Pressure Adjustments, Valve Body Warpage or Malfunction, Sticking, Leaking Seal Rings, Clutch Seals Leaking, Servo Leaks, Clogged Filter or Cooler Lines.	6. Perform hydraulic and air pressure tests to determine cause.
	7. Rear Clutch Malfunction, Leaking Seals or Worn Plates.	7. Air pressure check clutch-servo operation and repair as required.
	8. Overrunning Clutch Worn, Not Holding (Slips in 1 Only).	8. Replace Clutch.
SLIPS IN LOW GEAR ″D″ ONLY, BUT NOT IN MANUAL 1 POSITION	Overrunning Clutch Faulty.	Replace overrunning clutch.

AUTOMATIC TRANSMISSION - 42RE (Continued)

CONDITION	POSSIBLE CAUSES	CORRECTION
GROWLING, GRATING OR SCRAPING NOISES	1. Drive Plate Broken.	1. Replace.
	2. Torque Converter Bolts Hitting Dust Shield.	2. Dust shield bent. Replace or repair.
	3. Planetary Gear Set Broken/ Seized.	3. Check for debris in oil pan and repair as required.
	4. Overrunning Clutch Worn/Broken.	4. Inspect and check for debris in oil pan. Repair as required.
	5. Oil Pump Components Scored/ Binding.	5. Remove, inspect and repair as required.
	6. Output Shaft Bearing or Bushing Damaged.	6. Remove, inspect and repair as required.
	7. Clutch Operation Faulty.	7. Perform air pressure check and repair as required.
	8. Front and Rear Bands Mis-adjusted.	8. Adjust bands.
DRAGS OR LOCKS UP	1. Fluid Level Low.	1. Check and adjust level.
	2. Clutch Dragging/Failed	2. Air pressure check clutch operation and repair as required.
	3. Front or Rear Band Mis-adjusted.	3. Adjust bands.
	4. Case Leaks Internally.	4. Check for leakage between passages in case.
	5. Servo Band or Linkage Malfunction.	5. Air pressure check servo operation and repair as required.
	6. Overrunning Clutch Worn.	6. Remove and inspect clutch. Repair as required.
	7. Planetary Gears Broken.	7. Remove, inspect and repair as required (look for debris in oil pan).
	8. Converter Clutch Dragging.	8. Check for plugged cooler. Perform flow check. Inspect pump for excessive side clearance. Replace pump as required.
NO 4-3 DOWNSHIFT	1. Circuit Wiring and/or Connectors Shorted.	1. Test wiring and connectors with test lamp and volt/ohmmeter. Repair wiring as necessary. Replace connectors and/or harnesses as required.
	2. PCM Malfunction.	2. Check PCM operation with DRB® scan tool. Replace PCM only if faulty.
	3. TPS Malfunction	3. Check TPS with DRB® scan tool at PCM.
	4. Lockup Solenoid Not Venting.	4. Remove valve body and replace solenoid assembly if plugged or shorted.
	5. Overdrive Solenoid Not Venting.	5. Remove valve body and replace solenoid if plugged or shorted.
	6. Valve Body Valve Sticking.	6. Repair stuck 3-4 shift valve or lockup timing valve.

AUTOMATIC TRANSMISSION - 42RE (Continued)

CONDITION	POSSIBLE CAUSES	CORRECTION
NO 4-3 DOWNSHIFT WHEN CONTROL SWITCH IS TURNED OFF	1. Control Switch Open/Shorted.	1. Test and replace switch if faulty.
	2. Overdrive Solenoid Connector Shorted.	2. Test solenoids and replace if seized or shorted.
	3. PCM Malfunction.	3. Test with DRB® scan tool. Replace PCM if faulty.
	4. Valve Body Stuck Valves.	4. Repair stuck 3-4, lockup or lockup timing valve.
CLUNK NOISE FROM DRIVELINE ON CLOSED THROTTLE 4-3 DOWNSHIFT	1. Transmission Fluid Low.	1. Add Fluid.
	2. Throttle Cable Mis-adjusted.	2. Adjust cable.
	3. Overdrive Clutch Select Spacer Wrong Spacer.	3. Replace overdrive piston thrust plate spacer.
3-4 UPSHIFT OCCURS IMMEDIATELY AFTER 2-3 SHIFT	1. Overdrive Solenoid Connector or Wiring Shorted.	1. Test connector and wiring for loose connections, shorts or ground and repair as needed.
	2. TPS Malfunction.	2. Test TPS and replace as necessary. Check with DRB® scan tool.
	3. PCM Malfunction.	3. Test PCM with DRB® scan tool and replace controller if faulty.
	4. Overdrive Solenoid Malfunction.	4. Replace solenoid.
	5. Valve Body Malfunction.	5. Remove, disassemble, clean and inspect valve body components. Make sure all valves and plugs slide freely in bores. Polish valves with crocus cloth if needed.
WHINE/NOISE RELATED TO ENGINE SPEED	1. Fluid Level Low.	1. Add fluid and check for leaks.
	2. Shift Cable Incorrect Routing.	2. Check shift cable for correct routing. Should not touch engine or bell housing.

AUTOMATIC TRANSMISSION - 42RE (Continued)

CONDITION	POSSIBLE CAUSES	CORRECTION
NO 3-4 UPSHIFT	1. O/D Switch In OFF Position.	1. Turn control switch to ON position.
	2. Overdrive Circuit Fuse Blown.	2. Replace fuse. Determine why fuse failed and repair as necessary (i.e., shorts or grounds in circuit).
	3. O/D Switch Wire Shorted/Open Cut.	3. Check wires/connections with 12V test lamp and voltmeter. Repair damaged or loose wire/connection as necessary.
	4. Distance or Coolant Sensor Malfunction.	4. Check with DRB® scan tool and repair or replace as necessary.
	5. TPS Malfunction.	5. Check with DRB® scan tool and replace if necessary.
	6. Neutral Sense to PCM Wire Shorted/Cut.	6. Test switch/sensor as described in service section and replace if necessary. Engine no start.
	7. PCM Malfunction.	7. Check with DRB® scan tool and replace if necessary.
	8. Overdrive Solenoid Shorted/Open.	8. Replace solenoid if shorted or open and repair loose or damaged wires (DRB® scan tool).
	9. Solenoid Feed Orifice in Valve Body Blocked.	9. Remove, disassemble, and clean valve body thoroughly. Check feed orifice.
	10. Overdrive Clutch Failed.	10. Disassemble overdrive and repair as needed.
	11. Hydraulic Pressure Low.	11. Pressure test transmission to determine cause.
	12. Valve Body Valve Stuck.	12. Repair stuck 3-4 shift valve, 3-4 timing valve.
	13. O/D Piston Incorrect Spacer.	13. Remove unit, check end play and install correct spacer.
	14. Overdrive Piston Seal Failure.	14. Replace both seals.
	15. O/D Check Valve/Orifice Failed.	15. Check for free movement and secure assembly (in piston retainer). Check ball bleed orifice.

AUTOMATIC TRANSMISSION - 42RE (Continued)

CONDITION	POSSIBLE CAUSES	CORRECTION
SLIPS IN OVERDRIVE FOURTH GEAR	1. Fluid Level Low.	1. Add fluid and check for leaks.
	2. Overdrive Clutch Pack Worn.	2. Remove overdrive unit and rebuild clutch pack.
	3. Overdrive Piston Retainer Bleed Orifice Blown Out.	3. Disassemble transmission, remove retainer and replace orifice.
	4. Overdrive Piston or Seal Malfunction.	4. Remove overdrive unit. Replace seals if worn. Replace piston if damaged. If piston retainer is damaged, remove and disassemble the transmission.
	5. 3-4 Shift Valve, Timing Valve or Accumulator Malfunction.	5. Remove and overhaul valve body. Replace accumulator seals. Make sure all valves operate freely in bores and do not bind or stick. Make sure valve body screws are correctly tightened and separator plates are properly positioned.
	6. Overdrive Unit Thrust Bearing Failure.	6. Disassemble overdrive unit and replace thrust bearing (NO. 1 thrust bearing is between overdrive piston and clutch hub; NO. 2 thrust bearing is between the planetary gear and the direct clutch spring plate; NO. 3 thrust bearing is between overrunning clutch hub and output shaft).
	7. O/D Check Valve/Bleed Orifice Failure.	7. Check for function/secure orifice insert in O/D piston retainer.
DELAYED 3-4 UPSHIFT (SLOW TO ENGAGE)	1. Fluid Level Low.	1. Add fluid and check for leaks.
	2. Throttle Valve Cable Mis-adjusted.	2. Adjust throttle valve cable.
	3. Overdrive Clutch Pack Worn/ Burnt.	3. Remove unit and rebuild clutch pack.
	4. TPS Faulty.	4. Test with DRB® scan tool and replace as necessary
	5. Overdrive Clutch Bleed Orifice Plugged.	5. Disassemble transmission and replace orifice.
	6. Overdrive Solenoid or Wiring Shorted/Open.	6. Test solenoid and check wiring for loose/corroded connections or shorts/ grounds. Replace solenoid if faulty and repair wiring if necessary.
	7. Overdrive Excess Clearance.	7. Remove unit. Measure end play and select proper spacer.
	8. O/D Check Valve Missing or Stuck.	8. Check for presence of check valve. Repair or replace as required.
TORQUE CONVERTER LOCKS UP IN SECOND AND/OR THIRD GEAR	Lockup Solenoid, Relay or Wiring Shorted/Open.	Test solenoid, relay and wiring for continuity, shorts or grounds. Replace solenoid and relay if faulty. Repair wiring and connectors as necessary.
HARSH 1-2, 2-3, 3-4 OR 3-2 SHIFTS	Lockup Solenoid Malfunction.	Remove valve body and replace solenoid assembly.

AUTOMATIC TRANSMISSION - 42RE (Continued)

CONDITION	POSSIBLE CAUSES	CORRECTION
NO START IN PARK OR NEUTRAL	1. Gearshift Linkage/Cable Mis-adjusted.	1. Adjust linkage/cable.
	2. Neutral Sense Wire Open/Cut.	2. Check continuity with test lamp. Repair as required.
	3. Park/Neutral Switch, or Transmission Range Sensor Faulty.	3. Refer to service section for test and replacement procedure.
	4. Park/Neutral Switch, or Transmission Range Sensor Connection Faulty.	4. Connectors spread open. Repair.
	5. Valve Body Manual Lever Assembly Bent/Worn/Broken.	5. Inspect lever assembly and replace if damaged.
NO REVERSE (OR SLIPS IN REVERSE)	1. Direct Clutch Pack (front clutch) Worn.	1. Disassemble unit and rebuild clutch pack.
	2. Rear Band Mis-adjusted.	2. Adjust band.
	3. Front Clutch Malfunctioned/ Burned.	3. Air-pressure test clutch operation. Remove and rebuild if necessary.
	4. Overdrive Thrust Bearing Failure.	4. Disassemble geartrain and replace bearings.
	5. Direct Clutch Spring Collapsed/ Broken.	5. Remove and disassemble unit. Check clutch position and replace spring.

AUTOMATIC TRANSMISSION - 42RE (Continued)

CONDITION	POSSIBLE CAUSES	CORRECTION
OIL LEAKS.	1. Fluid Lines and Fittings Loose/ Leaks/Damaged.	1. Tighten fittings. If leaks persist, replace fittings and lines if necessary.
	2. Fill Tube (where tube enters case) Leaks/Damaged.	2. Replace tube seal. Inspect tube for cracks in fill tube.
	3. Pressure Port Plug Loose Loose/Damaged.	3. Tighten to correct torque. Replace plug or reseal if leak persists.
	4. Pan Gasket Leaks.	4. Tighten pan screws (150 in. lbs.). If leaks persist, replace gasket.
	5. Valve Body Manual Lever Shaft Seal Leaks/Worn.	5. Replace shaft seal.
	6. Rear Bearing Access Plate Leaks.	6. Replace gasket. Tighten screws.
	7. Gasket Damaged or Bolts are Loose.	7. Replace bolts or gasket or tighten both.
	8. Adapter/Extension Gasket Damaged Leaks/Damaged.	8. Replace gasket.
	9. Park/Neutral Switch, or Transmission Range Sensor Leaks/Damaged.	9. Replace switch and gasket.
	10. Converter Housing Area Leaks.	10. Check for leaks at seal caused by worn seal or burr on converter hub (cutting seal), worn bushing, missing oil return, oil in front pump housing or hole plugged. Check for leaks past O-ring seal on pump or past pump-to-case bolts; pump housing porous, oil coming out vent due to overfill or leak past front band shaft access plug.
	11. Pump Seal Leaks/Worn/ Damaged.	11. Replace seal.
	12. Torque Converter Weld Leak/Cracked Hub.	12. Replace converter.
	13. Case Porosity Leaks.	13. Replace case.
NOISY OPERATION IN FOURTH GEAR ONLY	1. Overdrive Clutch Discs, Plates or Snap Rings Damaged.	1. Remove unit and rebuild clutch pack.
	2. Overdrive Piston or Planetary Thrust Bearing Damaged.	2. Remove and disassemble unit. Replace either thrust bearing if damaged.
	3. Output Shaft Bearings Scored/ Damaged.	3. Remove and disassemble unit. Replace either bearing if damaged.
	4. Planetary Gears Worn/Chipped.	4. Remove and overhaul overdrive unit.
	5. Overdrive Unit Overrunning Clutch Rollers Worn/Scored.	5. Remove and overhaul overdrive unit.

AUTOMATIC TRANSMISSION - 42RE (Continued)

STANDARD PROCEDURE - ALUMINUM THREAD REPAIR

Damaged or worn threads in the aluminum transmission case and valve body can be repaired by the use of Heli-Coils™, or equivalent. This repair consists of drilling out the worn-out damaged threads. Then tap the hole with a special Heli-Coil™ tap, or equivalent, and installing a Heli-Coil™ insert, or equivalent, into the hole. This brings the hole back to its original thread size.

Heli-Coil™, or equivalent, tools and inserts are readily available from most automotive parts suppliers.

REMOVAL

The overdrive unit can be removed and serviced separately. It is not necessary to remove the entire transmission assembly to perform overdrive unit repairs.

If only the overdrive unit requires service, refer to Overdrive Removal for proper procedures.

CAUTION: The transmission and torque converter must be removed as an assembly to avoid component damage. The converter driveplate, pump bushing, or oil seal can be damaged if the converter is left attached to the driveplate during removal. Be sure to remove the transmission and converter as an assembly.

(1) Disconnect battery negative cable.

(2) Disconnect and lower or remove necessary exhaust components.

(3) Disconnect fluid cooler lines at transmission.

(4) Remove starter motor. (Refer to 8 - ELECTRICAL/STARTING/STARTER MOTOR - REMOVAL)

(5) Disconnect and remove crankshaft position sensor. (Refer to 14 - FUEL SYSTEM/FUEL INJECTION/CRANKSHAFT POSITION SENSOR - REMOVAL) Retain sensor attaching bolts.

CAUTION: The crankshaft position sensor will be damaged if the transmission is removed, or installed, while the sensor is still bolted to the engine block, or transmission (4.0L only). To avoid damage, be sure to remove the sensor before removing the transmission.

(6) Remove the bolts holding the bell housing brace to the transmission.

(7) Remove nut holding the bell housing brace to the engine to transmission bending brace.

(8) Remove the bell housing brace from the transmission (Fig. 13).

(9) Remove the bolt holding the torque converter cover to the transmission.

(10) Remove the torque converter cover from the transmission.

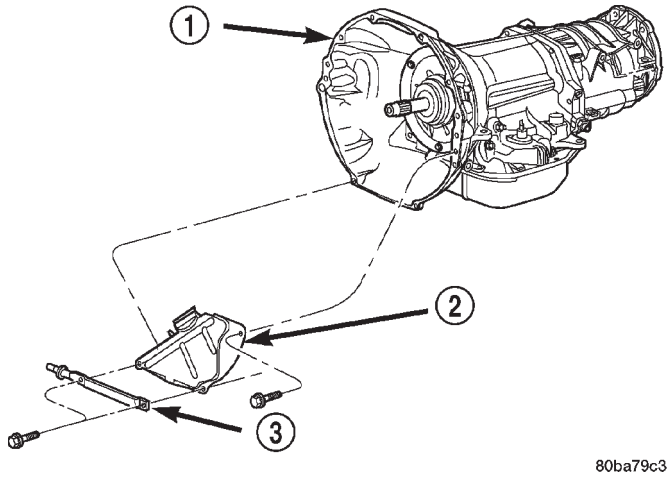

Fig. 13 Bell Housing Brace and Converter Cover

1 - TRANSMISSION
2 - TORQUE CONVERTER COVER
3 - BELLHOUSING BRACE

(11) If transmission is being removed for overhaul, remove transmission oil pan, drain fluid and reinstall pan.

(12) Remove fill tube bracket bolts and pull tube out of transmission. Retain fill tube seal. On 4 x 4 models, it will also be necessary to remove bolt attaching transfer case vent tube to converter housing.

(13) Rotate crankshaft in clockwise direction until converter bolts are accessible. Then remove bolts one at a time. Rotate crankshaft with socket wrench on dampener bolt.

(14) Mark propeller shaft and axle yokes for assembly alignment. Then disconnect and remove propeller shaft. On 4 x 4 models, remove both propeller shafts.

(15) Disconnect wires from park/neutral position switch and transmission solenoid.

(16) Disconnect gearshift cable from transmission manual valve lever (Fig. 14).

(17) Disconnect throttle valve cable from transmission bracket and throttle valve lever (Fig. 15).

(18) Disconnect transfer case shift cable from the transfer case shift lever (Fig. 16).

(19) Remove the clip securing the transfer case shift cable into the cable support bracket.

(20) Disconnect transmission fluid cooler lines at transmission fittings and clips.

(21) Support rear of engine with safety stand or jack.

(22) Raise transmission slightly with service jack to relieve load on crossmember and supports.

AUTOMATIC TRANSMISSION - 42RE (Continued)

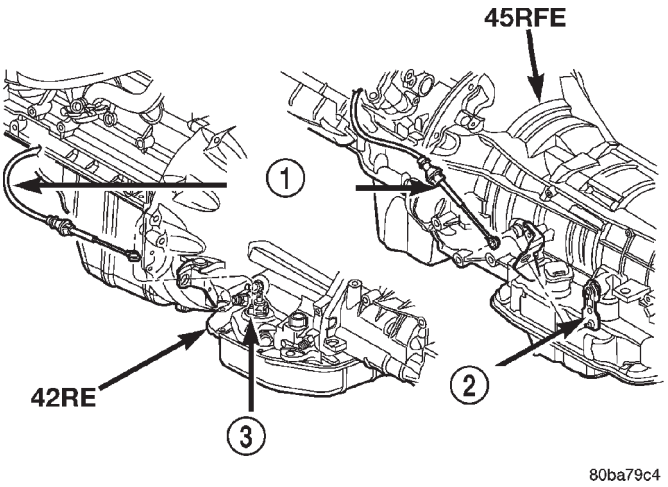

Fig. 14 Transmission Shift Cable

1 - SHIFT CABLE
2 - MANUAL LEVER
3 - MANUAL LEVER

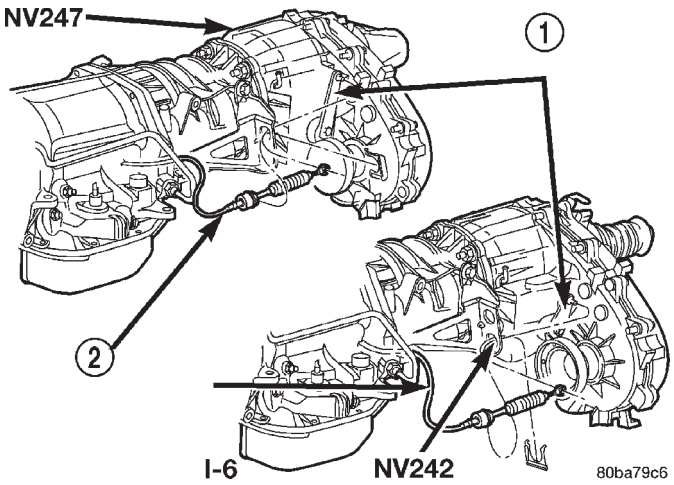

Fig. 16 Transfer Case Shift Cable

1 - TRANSFER CASE SHIFT LEVER
2 - TRANSFER CASE SHIFT CABLE

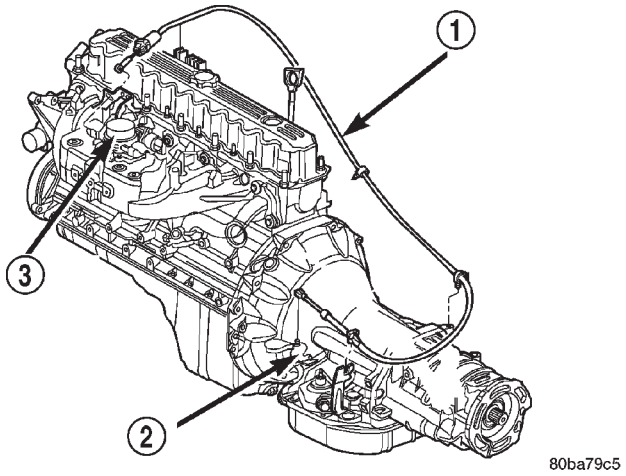

Fig. 15 Throttle Valve Cable

1 - THROTTLE VALVE CABLE
2 - THROTTLE VALVE LEVER
3 - THROTTLE BODY

(23) Remove bolts securing rear support and cushion to transmission and crossmember (Fig. 17).

(24) Remove bolts attaching crossmember to frame and remove crossmember.

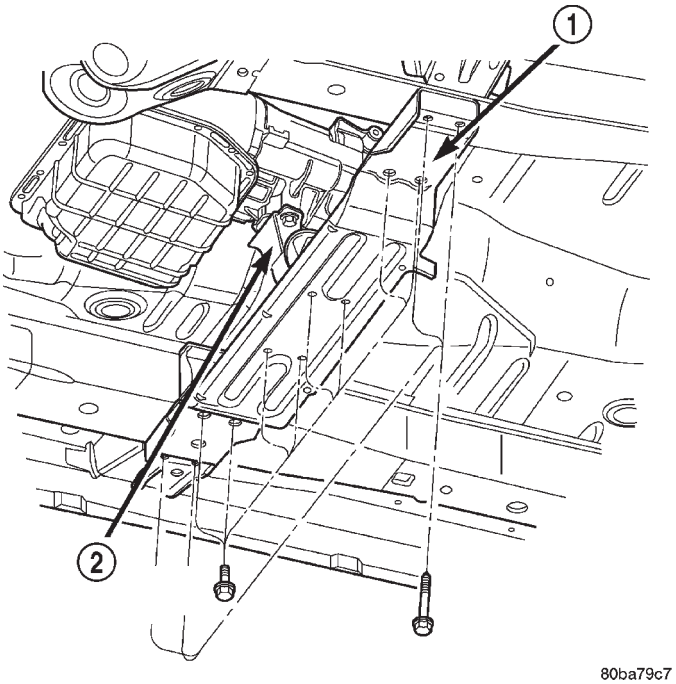

Fig. 17 Rear Transmission Crossmember

1 - CROSSMEMBER
2 - REAR TRANSMISSION MOUNT

AUTOMATIC TRANSMISSION - 42RE (Continued)

(25) Remove transfer case (Fig. 18) and (Fig. 19).

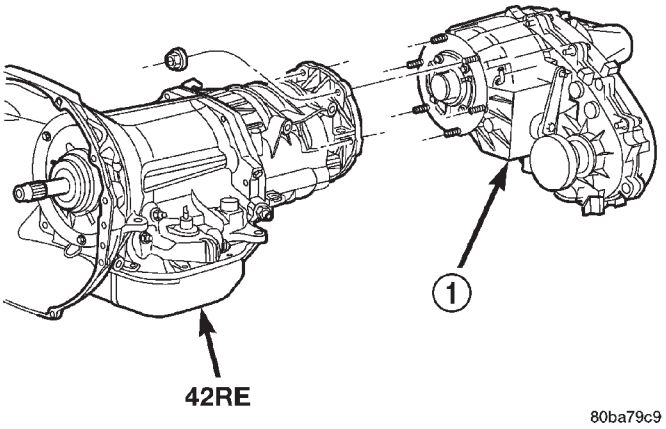

Fig. 18 Remove NV247 Transfer Case

1 - NV247 TRANSFER CASE

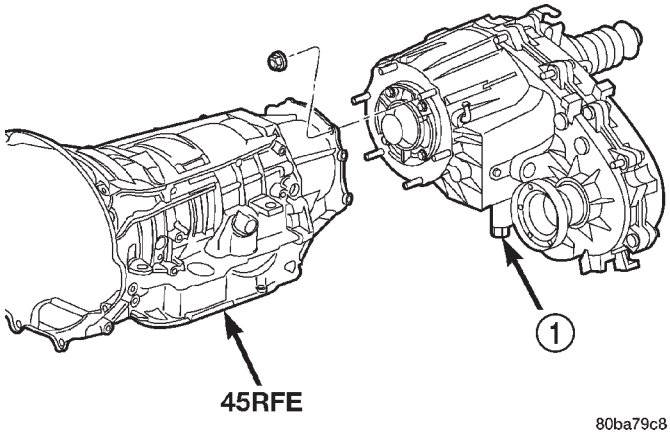

Fig. 19 Remove NV242 Transfer Case

1 - NV242 TRANSFER CASE

(26) Remove bolts holding the upper transmission bending braces to the torque converter housing and the overdrive unit (Fig. 20).

(27) Remove all remaining converter housing bolts.

(28) Carefully work transmission and torque converter assembly rearward off engine block dowels.

(29) Hold torque converter in place during transmission removal.

(30) Lower transmission and remove assembly from under the vehicle.

(31) To remove torque converter, carefully slide torque converter out of the transmission.

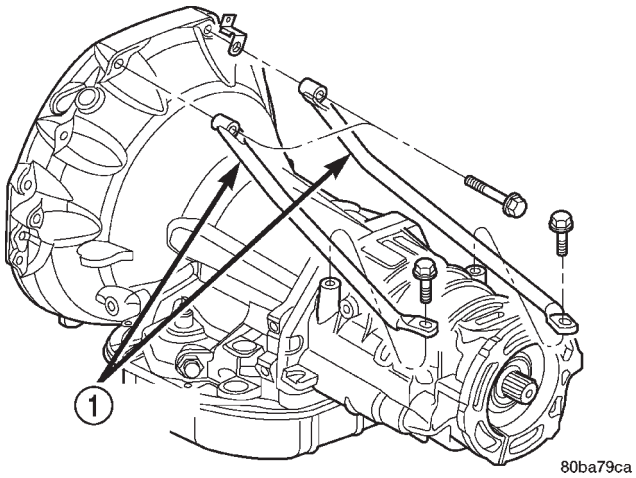

Fig. 20 Remove Upper Transmission Bending Braces

1 - TRANSMISSION BENDING BRACES

DISASSEMBLY

(1) Clean transmission exterior with steam gun or with solvent. Wear eye protection during cleaning operations.

(2) Place transmission in a vertical position.

(3) Measure input shaft end play as follows (Fig. 21).

(a) Attach Adapter 8266-6 to Handle 8266-8.

(b) Attach dial indicator C-3339 to Handle 8266-8.

(c) Install the assembled tool onto the input shaft of the transmission and tighten the retaining screw on Adapter 8266-6 to secure it to the input shaft.

(d) Position the dial indicator plunger against a flat spot on the oil pump and zero the dial indicator.

(e) Move the input shaft in and out. Record the maximum travel for assembly reference.

(4) Remove shift and throttle levers from valve body manual lever shaft.

(5) Place transmission in horizontal position.

(6) Remove transmission oil pan and gasket.

(7) Remove filter from valve body (Fig. 22). Keep filter screws separate from other valve body screws. Filter screws are longer and should be kept with filter.

AUTOMATIC TRANSMISSION - 42RE (Continued)

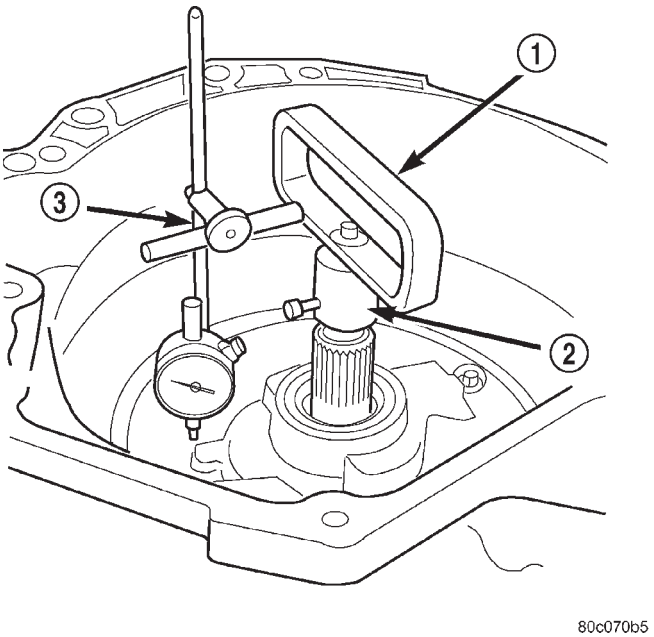

Fig. 21 Checking Input Shaft End Play

1 - TOOL 8266-8
2 - TOOL 8266-6
3 - TOOL C-3339

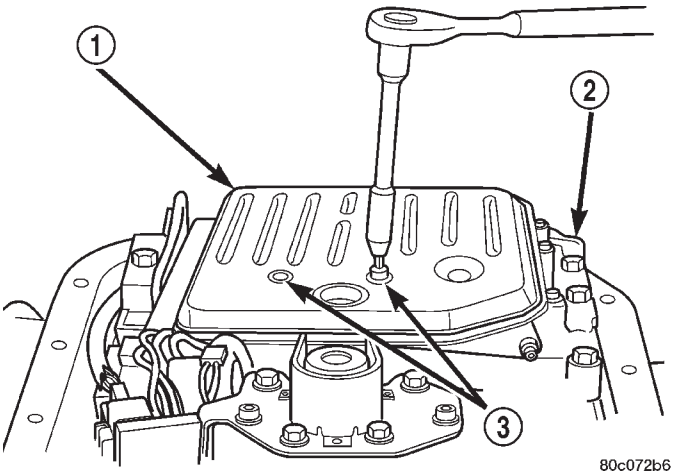

Fig. 22 Oil Filter Removal

1 - OIL FILTER
2 - VALVE BODY
3 - FILTER SCREWS (2)

(8) Remove park/neutral position switch.

(9) Remove hex head bolts attaching valve body to transmission case (Fig. 23). A total of 10 bolts are used. Note different bolt lengths for assembly reference.

(10) Remove valve body assembly. Push valve body harness connector out of case. Then work park rod and valve body out of case (Fig. 24).

(11) Remove accumulator piston and inner and outer springs (Fig. 25).

(12) Remove pump oil seal with suitable pry tool or slide-hammer mounted screw.

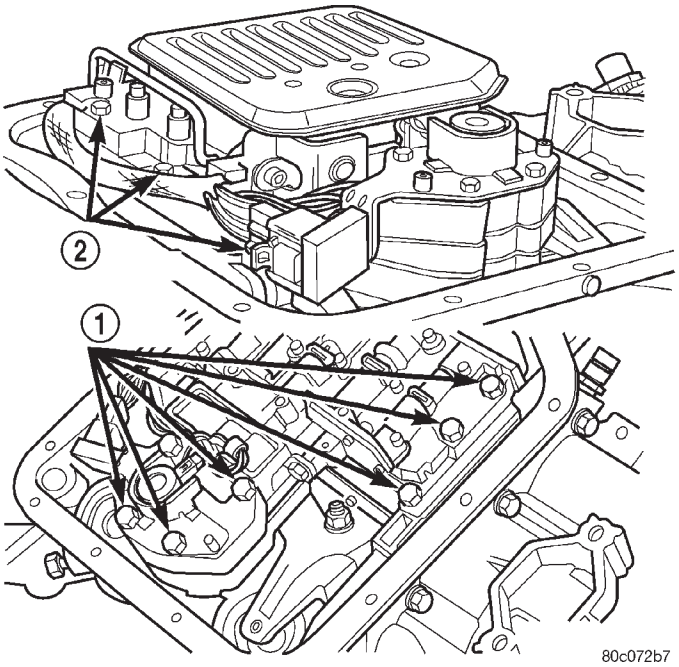

Fig. 23 Valve Body Bolt Locations

1 - VALVE BODY BOLTS
2 - VALVE BODY BOLTS

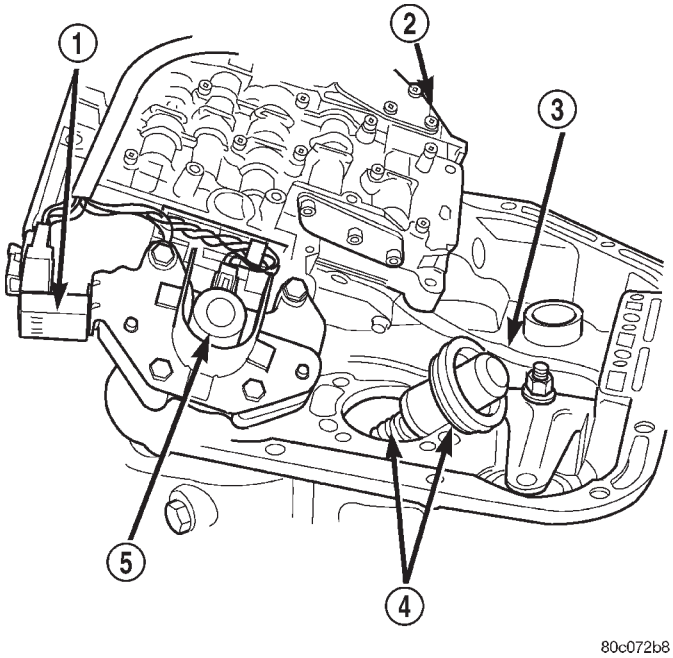

Fig. 24 Valve Body Removal

1 - GOVERNOR PRESSURE SENSOR
2 - VALVE BODY
3 - PARK ROD
4 - ACCUMULATOR PISTON
5 - GOVERNOR PRESSURE SOLENOID

AUTOMATIC TRANSMISSION - 42RE (Continued)

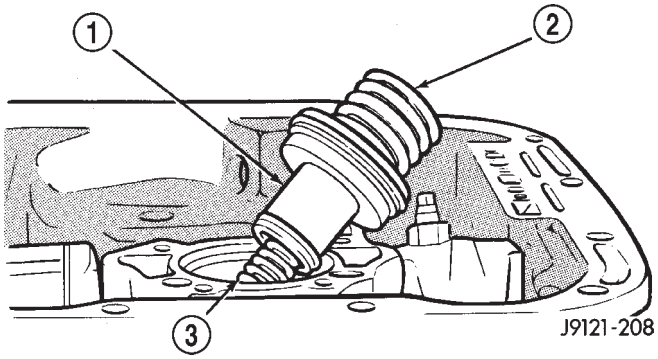

Fig. 25 Accumulator Piston And Springs

1 - ACCUMULATOR PISTON
2 - OUTER SPRING
3 - INNER SPRING

(13) Loosen front band adjusting screw locknut 4-5 turns. Then tighten band adjusting screw until band is tight around front clutch retainer. This prevents front/rear clutches from coming out with pump and possibly damaging clutch or pump components.

(14) Remove oil pump bolts.

(15) Thread bolts of Slide Hammer Tools C-3752 into threaded holes in pump body flange (Fig. 26).

(16) Bump slide hammer weights outward to remove pump and reaction shaft support assembly from case (Fig. 26).

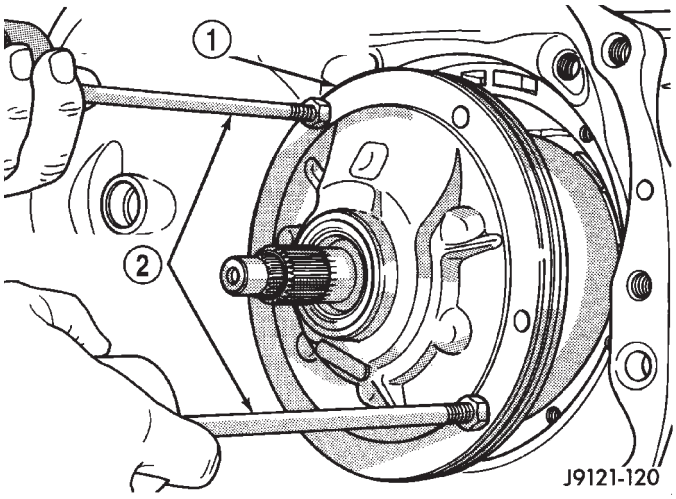

Fig. 26 Removing Oil Pump And Reaction Shaft Support Assembly

1 - OIL PUMP AND REACTION SHAFT SUPPORT ASSEMBLY
2 - SLIDE HAMMER TOOLS C-3752

(17) Loosen front band adjusting screw until band is completely loose.

(18) Squeeze front band together and remove band strut (Fig. 27).

(19) Remove front band lever (Fig. 28).

(20) Remove front band lever shaft plug, if necessary, from converter housing.

(21) Remove front band lever shaft.

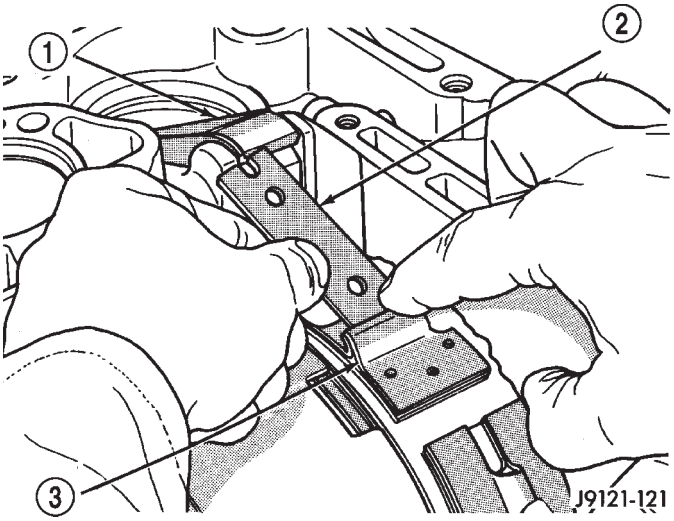

Fig. 27 Removing Front Band Strut

1 - BAND LEVER
2 - BAND STRUT
3 - FRONT BAND

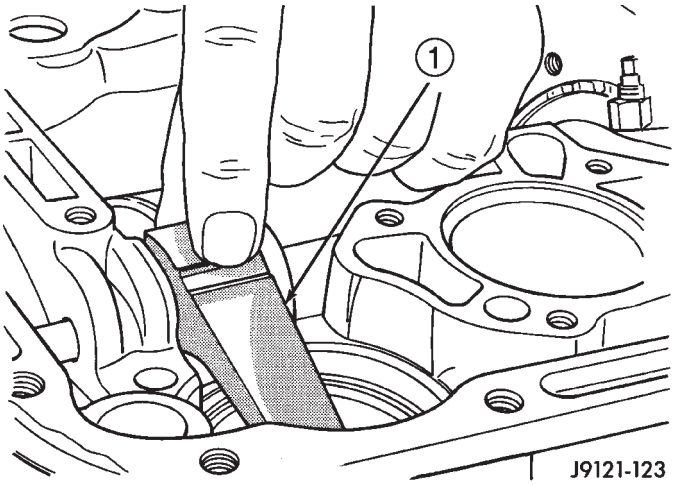

Fig. 28 Removing Front Band Lever

1 - FRONT BAND LEVER

(22) Remove front and rear clutch units as assembly. Grasp input shaft, hold clutch units together and remove them from case (Fig. 29).

(23) Lift front clutch off rear clutch (Fig. 30). Set clutch units aside for overhaul.

(24) Remove intermediate shaft thrust washer from front end of shaft or from rear clutch hub (Fig. 31).

AUTOMATIC TRANSMISSION - 42RE (Continued)

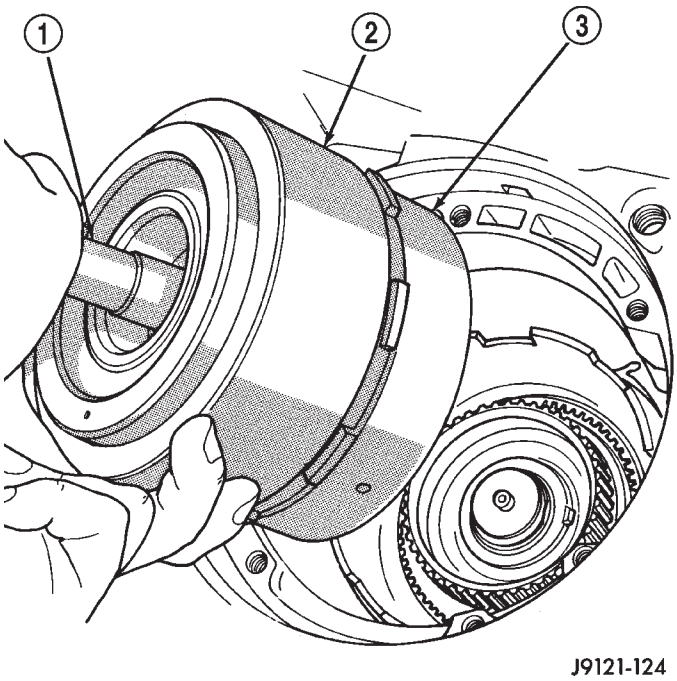

Fig. 29 Removing Front/Rear Clutch Assemblies

1 - INPUT SHAFT
2 - FRONT CLUTCH
3 - REAR CLUTCH

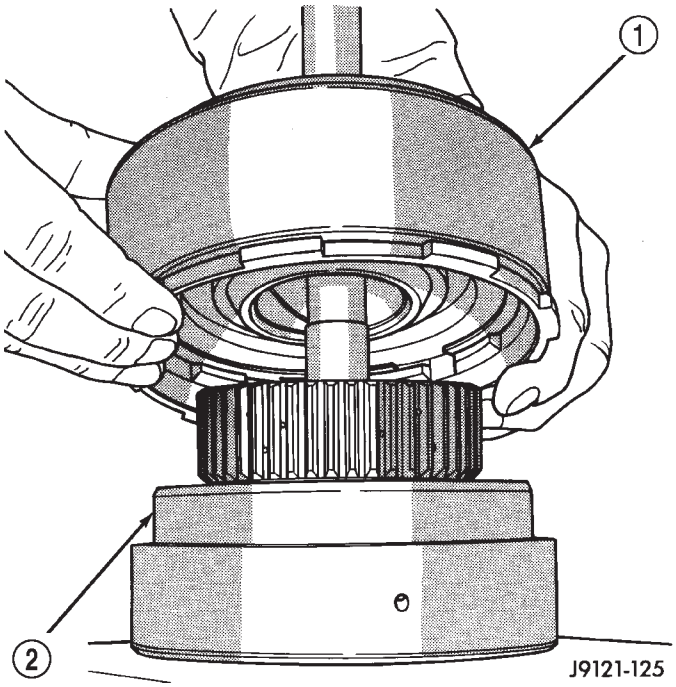

Fig. 30 Separating Front/Rear Clutch Assemblies

1 - FRONT CLUTCH
2 - REAR CLUTCH

(25) Remove output shaft thrust plate from intermediate shaft hub (Fig. 32).

(26) Slide front band off driving shell (Fig. 33) and remove band from case.

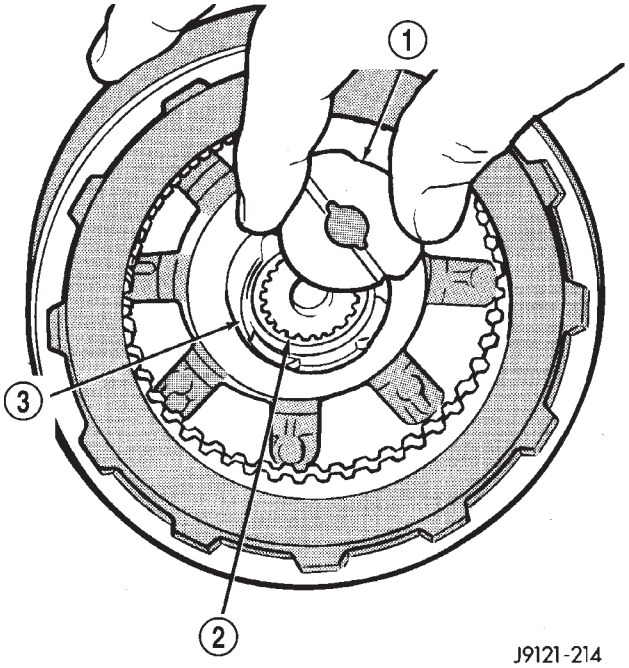

Fig. 31 Removing Intermediate Shaft Thrust Washer

1 - INTERMEDIATE SHAFT THRUST WASHER
2 - INPUT SHAFT
3 - REAR CLUTCH RETAINER HUB

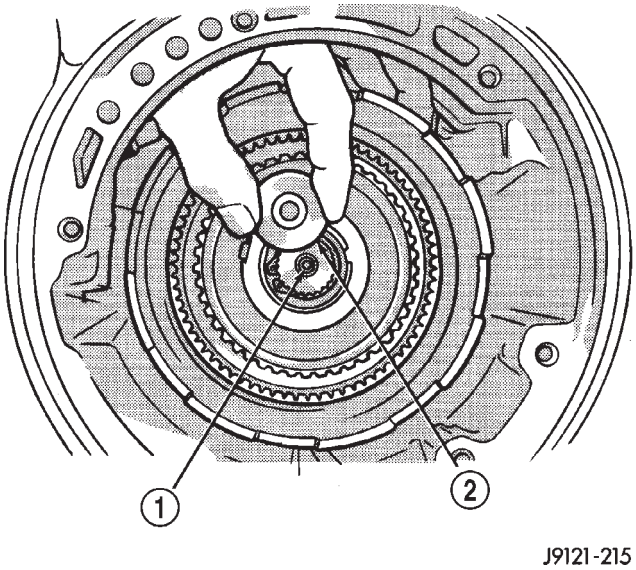

Fig. 32 Removing Intermediate Shaft Thrust Plate

1 - INTERMEDIATE SHAFT HUB
2 - INTERMEDIATE SHAFT THRUST PLATE

AUTOMATIC TRANSMISSION - 42RE (Continued)

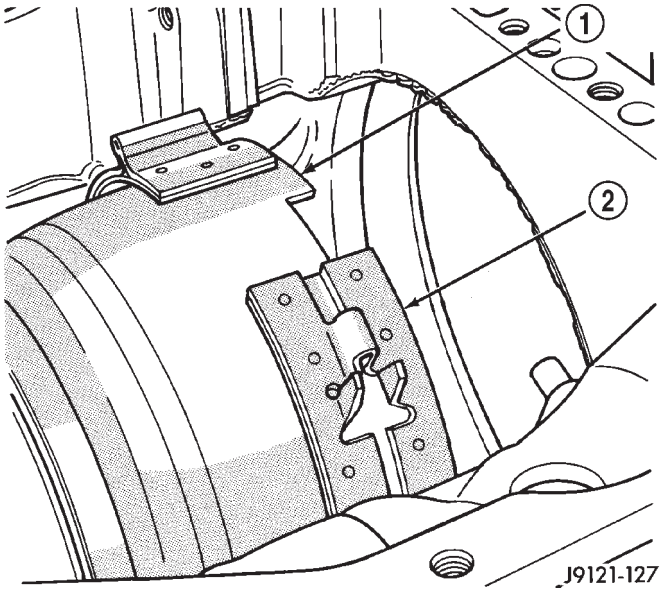

Fig. 33 Front Band Removal

1 - DRIVING SHELL
2 - FRONT BAND

(27) Remove planetary geartrain as assembly (Fig. 34). Support geartrain with both hands during removal. Do not allow machined surfaces on intermediate shaft or overdrive piston retainer to become nicked or scratched.

(28) If overdrive unit is not to be serviced, install Alignment Shaft 6227-2 into the overdrive unit to prevent misalignment of the overdrive clutches during service of main transmission components.

(29) Loosen rear band adjusting screw 4-5 turns.

(30) Remove low-reverse drum snap-ring (Fig. 35).

(31) Remove low-reverse drum and reverse band.

(32) Remove overrunning clutch roller and spring assembly as a unit (Fig. 36).

(33) Compress front servo rod guide about 1/8 inch with Valve Spring Compressor C-3422-B (Fig. 37).

(34) Remove front servo rod guide snap-ring. Exercise caution when removing snap-ring. Servo bore can be scratched or nicked if care is not exercised.

(35) Remove compressor tools and remove front servo rod guide, spring and servo piston.

(36) Compress rear servo spring retainer about 1/16 inch with Valve Spring Compressor C-3422-B (Fig. 38).

(37) Remove rear servo spring retainer snap-ring. Then remove compressor tools and remove rear servo spring and piston.

(38) Inspect transmission components.

NOTE: To Service the overrunning clutch cam or overdrive piston retainer, refer to the Overrunning Clutch Cam service procedure in this section.

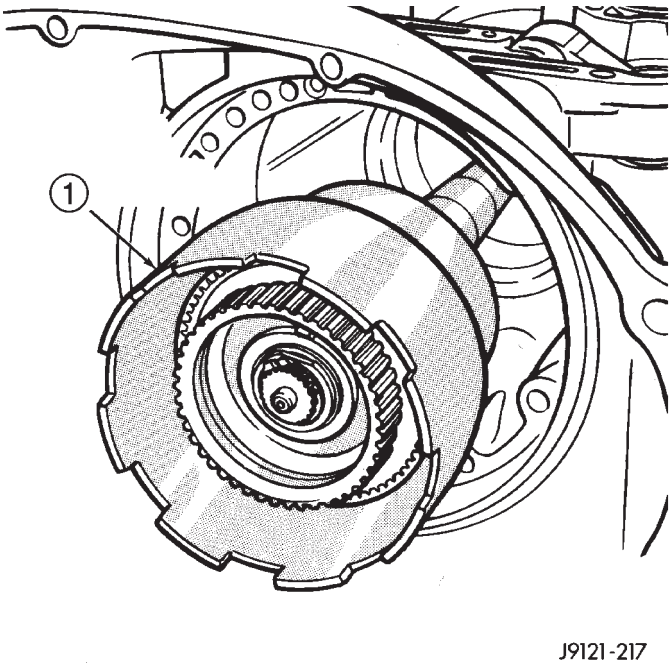

Fig. 34 Removing Planetary Geartrain And Intermediate Shaft Assembly

1 - PLANETARY GEARTRAIN AND INTERMEDIATE SHAFT ASSEMBLY

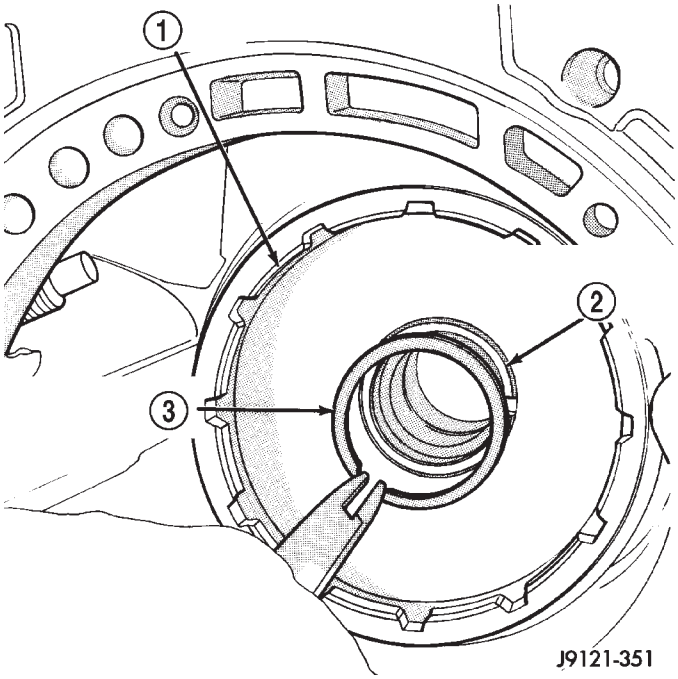

Fig. 35 Removing Low-Reverse Drum Snap-Ring

1 - LOW-REVERSE DRUM
2 - HUB OF OVERDRIVE PISTON RETAINER
3 - LOW-REVERSE DRUM SNAP-RING

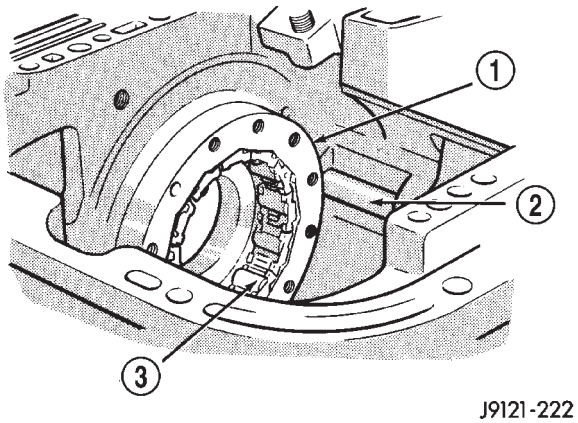

Fig. 36 Overrunning Clutch Assembly Removal

1 - OVERRUNNING CLUTCH CAM
2 - REAR BAND REACTION PIN
3 - OVERRUNNING CLUTCH ASSEMBLY

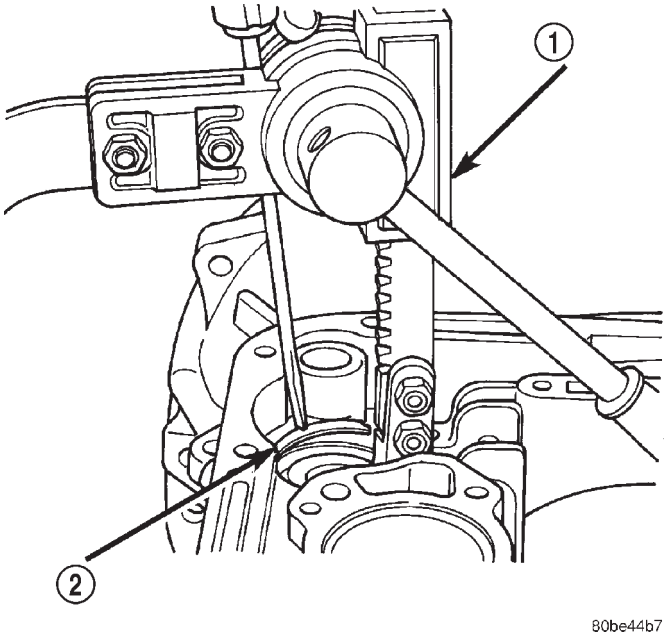

Fig. 37 Compressing Front Servo Rod Guide

1 - SPRING COMPRESSOR TOOL C-3422-B
2 - ROD GUIDE SNAP-RING

CLEANING

Clean the case in a solvent tank. Flush the case bores and fluid passages thoroughly with solvent. Dry the case and all fluid passages with compressed air. Be sure all solvent is removed from the case and that all fluid passages are clear.

NOTE: Do not use shop towels or rags to dry the case (or any other transmission component) unless they are made from lint-free materials. Lint will stick to case surfaces and transmission components and circulate throughout the transmission after assembly. A sufficient quantity of lint can block fluid passages and interfere with valve body operation.

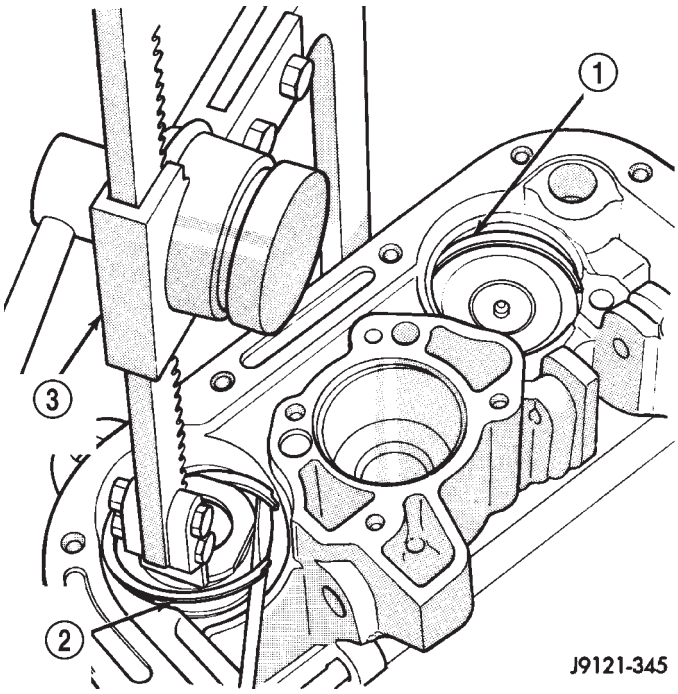

Fig. 38 Compressing Rear Servo Spring

1 - FRONT SERVO SNAP-RING
2 - REAR SERVO SNAP-RING
3 - SPECIAL TOOL

Lubricate transmission parts with Mopar® ATF +4, type 9602, transmission fluid during overhaul and assembly. Use petroleum jelly, Mopar® Door Ease, or Ru-Glyde™ to prelubricate seals, O-rings, and thrust washers. Petroleum jelly can also be used to hold parts in place during reassembly.

INSPECTION

Inspect the case for cracks, porous spots, worn bores, or damaged threads. Damaged threads can be repaired with Helicoil thread inserts. However, the case will have to be replaced if it exhibits any type of damage or wear.

Lubricate the front band adjusting screw threads with petroleum jelly and thread the screw part-way into the case. Be sure the screw turns freely.

Inspect the transmission bushings during overhaul. Bushing condition is important as worn, scored bushings contribute to low pressures, clutch slip and accelerated wear of other components. However, do not replace bushings as a matter of course. Replace bushings only when they are actually worn, or scored.

Use recommended tools to replace bushings. The tools are sized and designed to remove, install, and

AUTOMATIC TRANSMISSION - 42RE (Continued)

seat bushings correctly. The bushing replacement tools are included in Bushing Tool Set C-3887-B.

Pre-sized service bushings are available for replacement purposes. Only the sun gear bushings are not serviced.

The use of crocus cloth is permissible where necessary, providing it is used carefully. When used on shafts, or valves, use extreme care to avoid rounding off sharp edges. Sharp edges are vital as they prevent foreign matter from getting between the valve and valve bore.

Do not reuse oil seals, gaskets, seal rings, or O-rings during overhaul. Replace these parts as a matter of course. Also do not reuse snap rings or E-clips that are bent or distorted. Replace these parts as well.

ASSEMBLY

Do not allow dirt, grease, or foreign material to enter the case or transmission components during assembly. Keep the transmission case and components clean. Also make sure the tools and workbench area used for assembly operations are equally clean.

Shop towels used for wiping off tools and hands must be made from **lint free** material. Lint will stick to transmission parts and could interfere with valve operation, or even restrict fluid passages.

Lubricate the transmission components with Mopar® transmission fluid during reassembly. Use Mopar® Door Ease, or Ru-Glyde™ on seals and O-rings to ease installation.

Petroleum jelly can also be used to hold thrust washers, thrust plates and gaskets in position during assembly. However, **do not** use chassis grease, bearing grease, white grease, or similar lubricants on any transmission part. These types of lubricants can eventually block or restrict fluid passages and interfere with valve operation. Use petroleum jelly only.

Do not force parts into place. The transmission components and subassemblies are easily installed by hand when properly aligned.

If a part seems extremely difficult to install, it is either misaligned or incorrectly assembled. Also verify that thrust washers, thrust plates and seal rings are correctly positioned before assembly. These parts can interfere with proper assembly if mis-positioned.

The planetary geartrain, front/rear clutch assemblies and oil pump are all much easier to install when the transmission case is upright.

(1) Install rear servo piston, spring and retainer (Fig. 39). Install spring on top of servo piston and install retainer on top of spring.

(2) Install front servo piston assembly, servo spring and rod guide (Fig. 40).

(3) Compress front/rear servo springs with Valve Spring Compressor C-3422-B and install each servo snap-ring (Fig. 41).

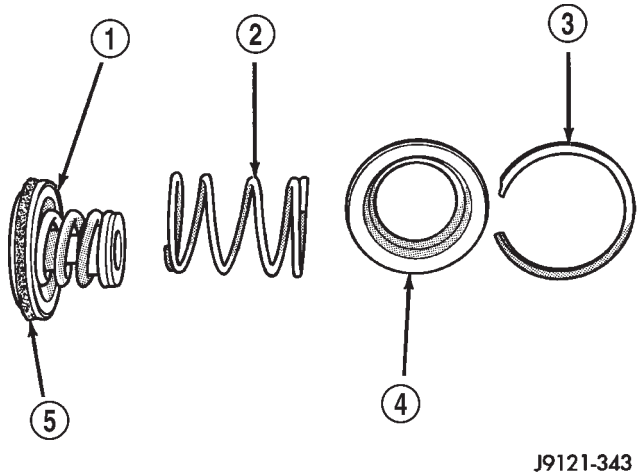

Fig. 39 Rear Servo Components

1 - SERVO PISTON
2 - PISTON SPRING
3 - SNAP-RING
4 - RETAINER
5 - PISTON SEAL

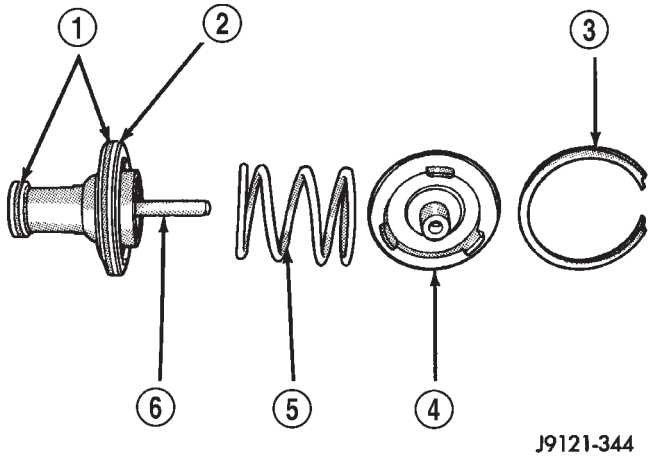

Fig. 40 Front Servo Components

1 - PISTON SEAL RINGS
2 - SERVO PISTON
3 - SNAP-RING
4 - ROD GUIDE
5 - SPRING
6 - ROD

(4) Lubricate clutch cam rollers with transmission fluid.

(5) Install rear band in case (Fig. 42). Be sure twin lugs on band are seated against reaction pin.

(6) Install low-reverse drum and check overrunning clutch operation as follows:

(a) Lubricate overrunning clutch race (on drum hub) with transmission fluid.

(b) Guide drum through rear band.

AUTOMATIC TRANSMISSION - 42RE (Continued)

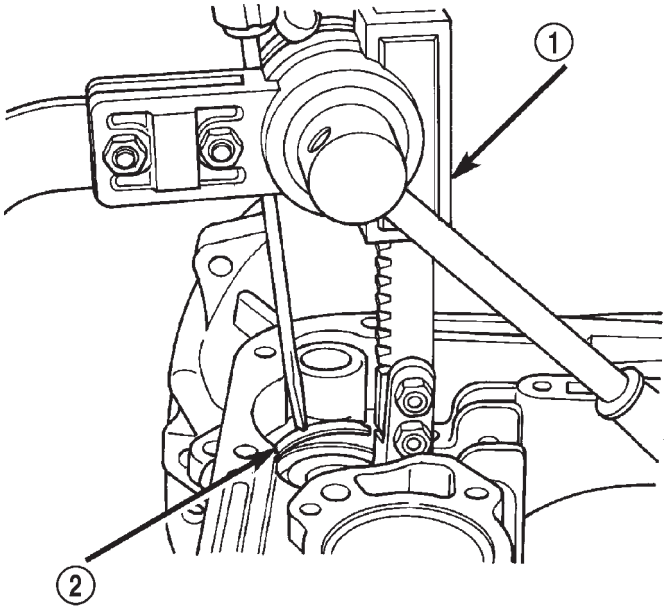

Fig. 41 Compressing Front/Rear Servo Springs

1 - SPRING COMPRESSOR TOOL C-3422-B
2 - ROD GUIDE SNAP-RING

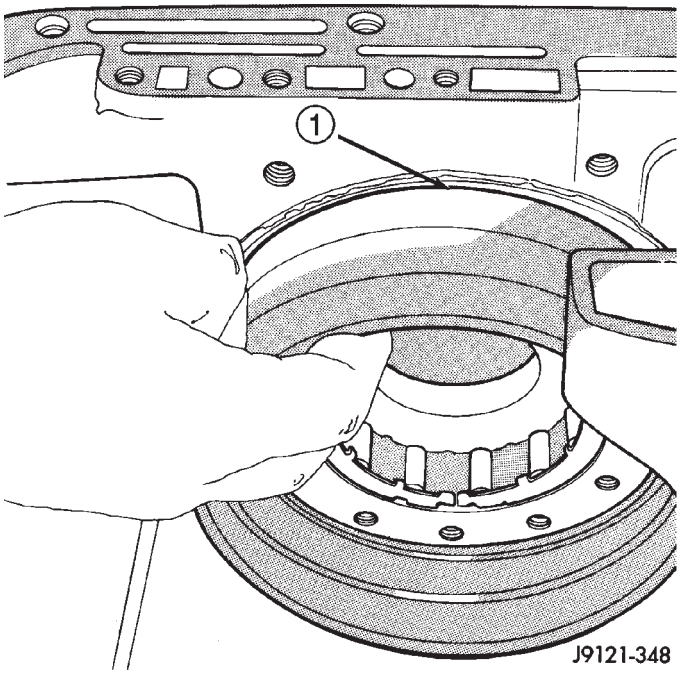

Fig. 42 Rear Band Installation

1 - REAR BAND

(c) Tilt drum slightly and start race (on drum hub) into overrunning clutch rollers.

(d) Press drum rearward and turn it in clockwise direction until drum seats in overrunning clutch (Fig. 43).

(e) Turn drum back and forth. Drum should rotate freely in clockwise direction and lock in counterclockwise direction (as viewed from front of case).

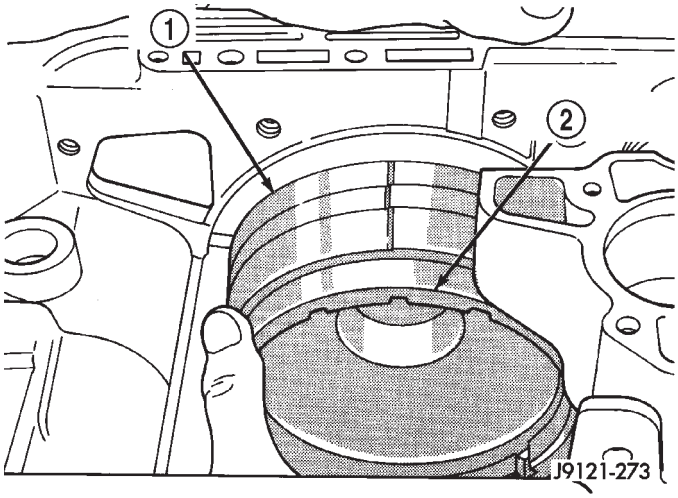

Fig. 43 Installing Low-Reverse Drum

1 - REAR BAND
2 - LOW-REVERSE DRUM

(7) Install snap-ring that secures low-reverse drum to hub of overdrive piston retainer (Fig. 44).

(8) Install rear band lever and pivot pin (Fig. 45). Align lever with pin bores in case and push pivot pin into place.

(9) Install planetary geartrain assembly (Fig. 46).

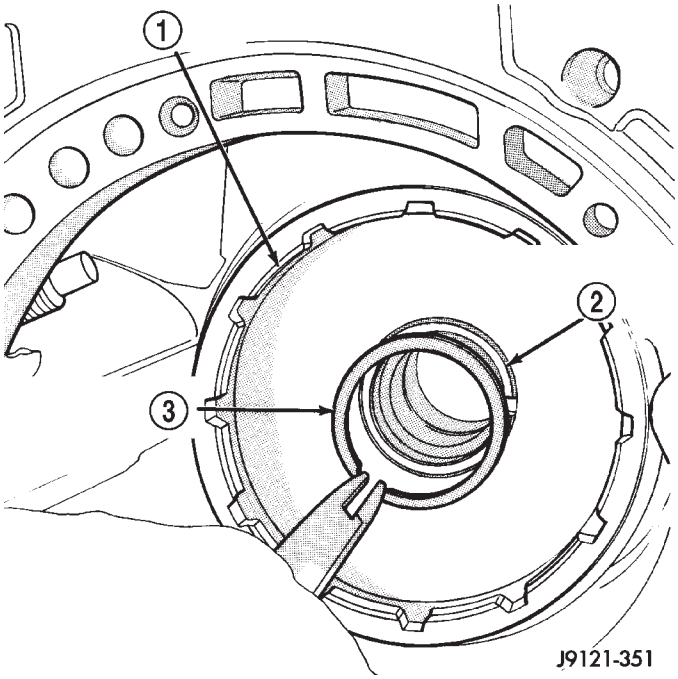

Fig. 44 Installing Low-Reverse Drum Retaining Snap-Ring

1 - LOW-REVERSE DRUM
2 - HUB OF OVERDRIVE PISTON RETAINER
3 - LOW-REVERSE DRUM SNAP-RING

AUTOMATIC TRANSMISSION - 42RE (Continued)

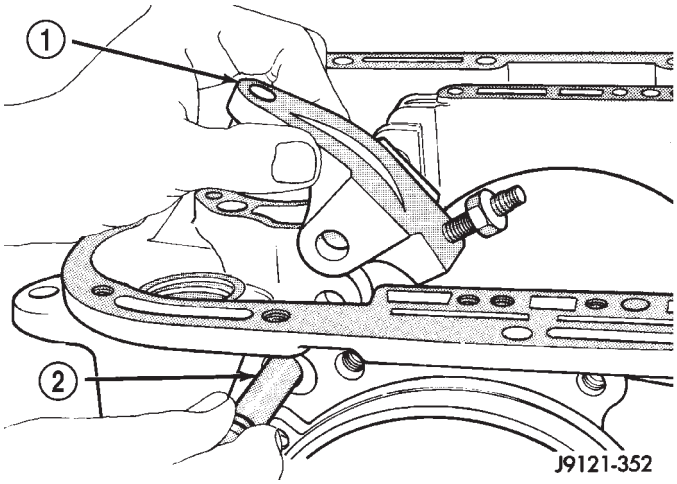

Fig. 45 Rear Band Lever And Pivot Pin Installation

1 - REAR BAND LEVER
2 - LEVER PIVOT PIN

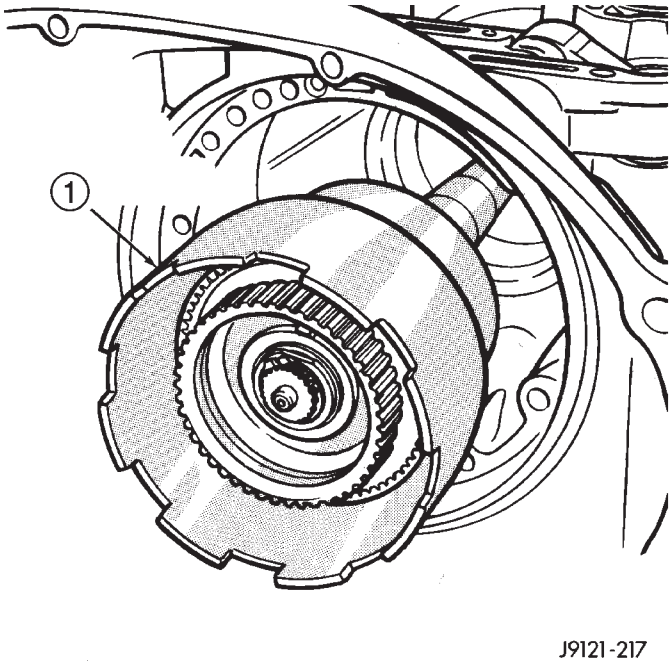

Fig. 46 Installing Planetary Geartrain

1 - PLANETARY GEARTRAIN AND INTERMEDIATE SHAFT ASSEMBLY

(10) Install thrust plate on intermediate shaft hub (Fig. 47). Use petroleum jelly to hold thrust plate in place.

(11) Check seal ring on rear clutch retainer hub and seal rings on input shaft (Fig. 48). Also verify that shaft seal rings are installed in sequence shown.

(12) Install rear clutch thrust washer (Fig. 49). Use additional petroleum jelly to hold washer in place if necessary.

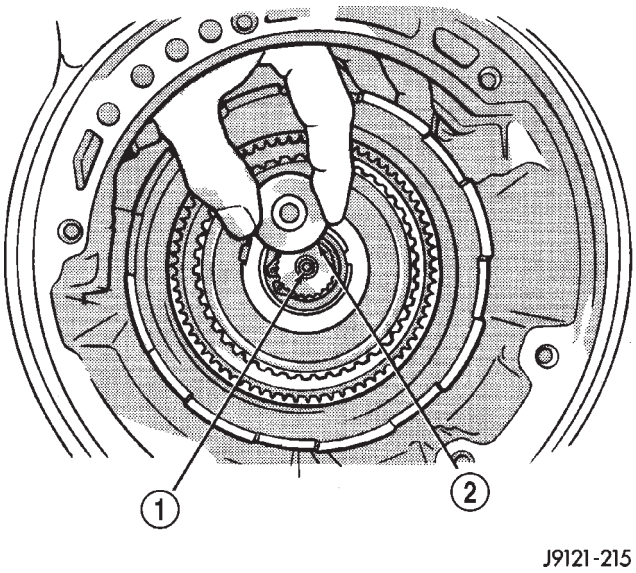

Fig. 47 Installing Intermediate Shaft Thrust Plate

1 - INTERMEDIATE SHAFT HUB
2 - INTERMEDIATE SHAFT THRUST PLATE

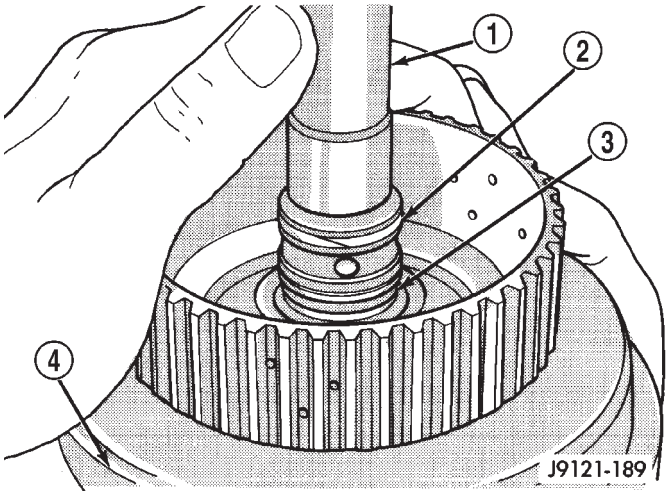

Fig. 48 Input Shaft Seal Ring Location

1 - INPUT SHAFT
2 - TEFLON SEAL RING
3 - PLASTIC SEAL RING
4 - REAR CLUTCH RETAINER

(13) Align clutch discs in front clutch and install front clutch on rear clutch (Fig. 50). Rotate front clutch retainer back and forth until completely seated on rear clutch retainer.

(14) Coat intermediate shaft thrust washer with petroleum jelly. Then install washer in rear clutch hub (Fig. 51). Use enough petroleum jelly to hold washer in place. Be sure grooved side of washer faces rearward (toward output shaft) as shown. Also note that washer only fits one way in clutch hub. Note

AUTOMATIC TRANSMISSION - 42RE (Continued)

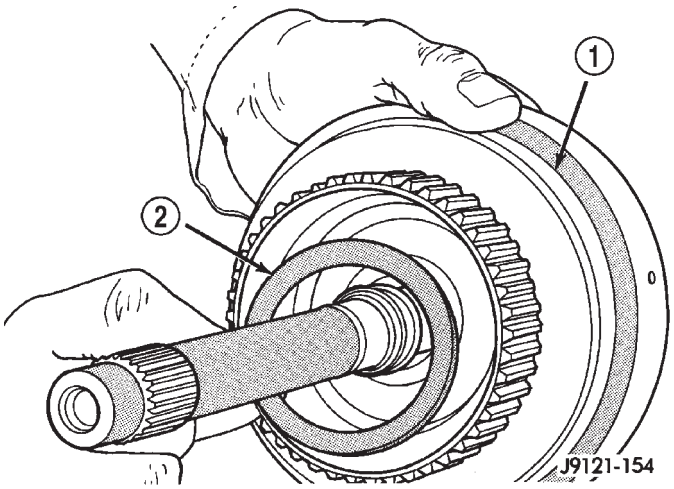

Fig. 49 Installing Rear Clutch Thrust Washer

1 - REAR CLUTCH RETAINER
2 - REAR CLUTCH THRUST WASHER (FIBER)

thickness of this washer. It is a select fit part and is used to control transmission end play.

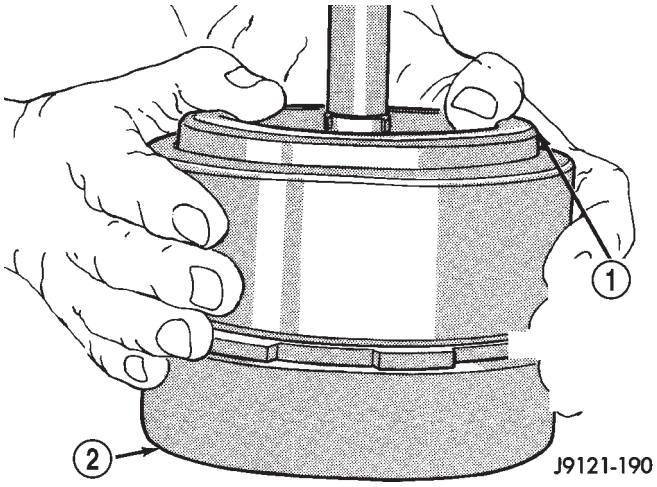

Fig. 50 Assembling Front And Rear Clutch Units

1 - TURN FRONT CLUTCH BACK & FORTH UNTIL SEATED
2 - REAR CLUTCH ASSEMBLY

(15) Align drive teeth on rear clutch discs with small screwdriver (Fig. 52). This makes installation on front planetary easier.

(16) Raise front end of transmission upward as far as possible and support case with wood blocks. Front/rear clutch and oil pump assemblies are easier to install if transmission is as close to upright position as possible.

(17) Slide front band into case.

(18) Install front and rear clutch units as assembly (Fig. 53). Align rear clutch with front annulus gear and install assembly in driving shell. Be sure output

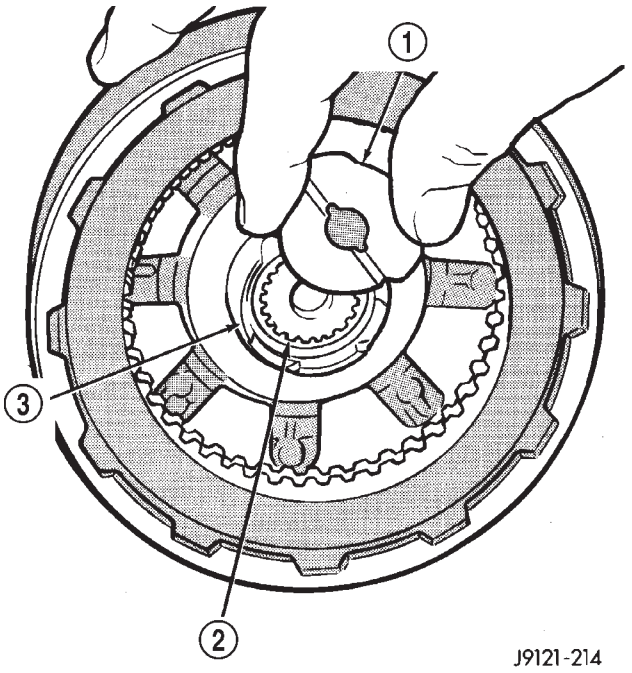

Fig. 51 Installing Intermediate Shaft Thrust Plate

1 - INTERMEDIATE SHAFT THRUST WASHER
2 - INPUT SHAFT
3 - REAR CLUTCH RETAINER HUB

shaft thrust washer and thrust plate are not displaced during installation.

(19) Carefully work assembled clutches back and forth to engage and seat rear clutch discs on front annulus gear. Also be sure front clutch drive lugs are fully engaged in slots of driving shell after installation.

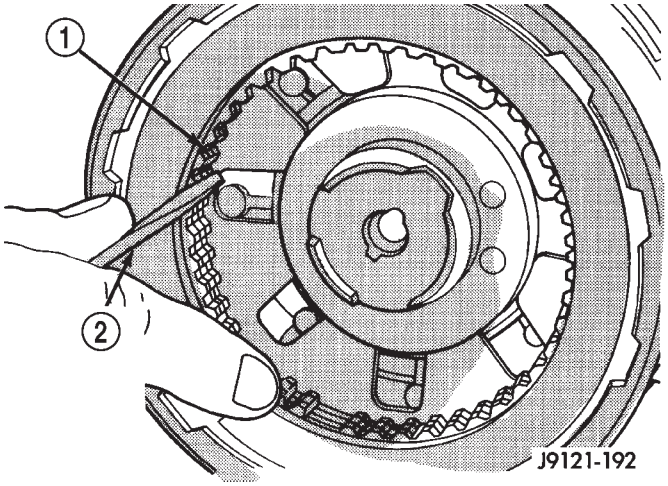

Fig. 52 Aligning Rear Clutch Disc Lugs

1 - REAR CLUTCH DISCS
2 - USE SMALL SCREWDRIVER TO ALIGN CLUTCH DISC TEETH

AUTOMATIC TRANSMISSION - 42RE (Continued)

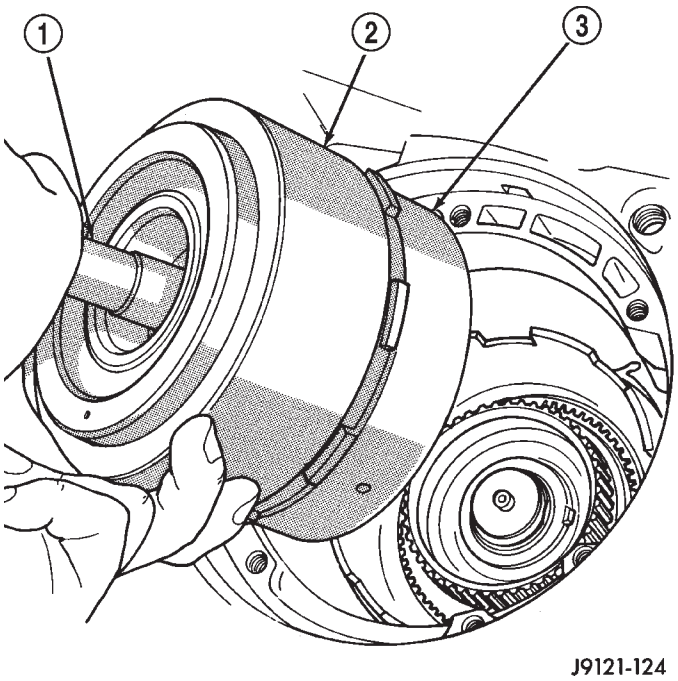

Fig. 53 Installing Front/Rear Clutch Assemblies

1 - INPUT SHAFT
2 - FRONT CLUTCH
3 - REAR CLUTCH

(20) Assemble front band strut.

(21) Install front band adjuster, strut and adjusting screw (Fig. 54).

(22) Tighten band adjusting screw until band just grips clutch retainer. Verify that front/rear clutches are still seated before continuing.

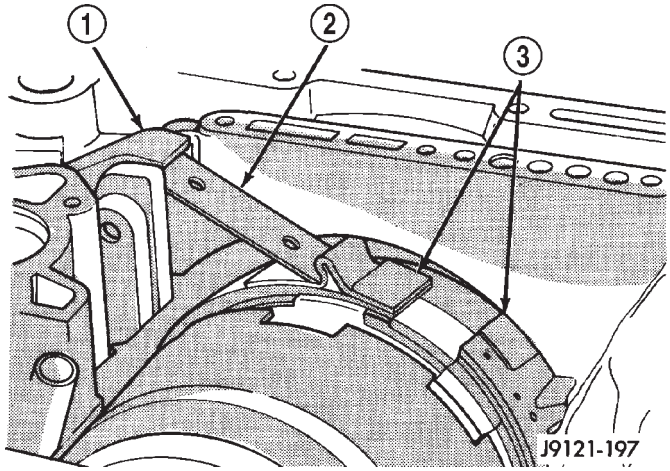

Fig. 54 Front Band Linkage Installation

1 - BAND LEVER
2 - BAND STRUT
3 - FRONT BAND

(23) Check seal rings on reaction shaft support hub. Verify that seal rings are hooked together and that front clutch thrust washer is properly positioned (Fig. 55). Use petroleum jelly to hold thrust washer in place if necessary.

(24) Lubricate oil pump body seal with petroleum jelly. Lubricate pump shaft seal lip with petroleum jelly.

(25) Thread two Pilot Stud Tools C-3288-B into bolt holes in oil pump bore flange (Fig. 56).

(26) Align and install oil pump gasket (Fig. 56).

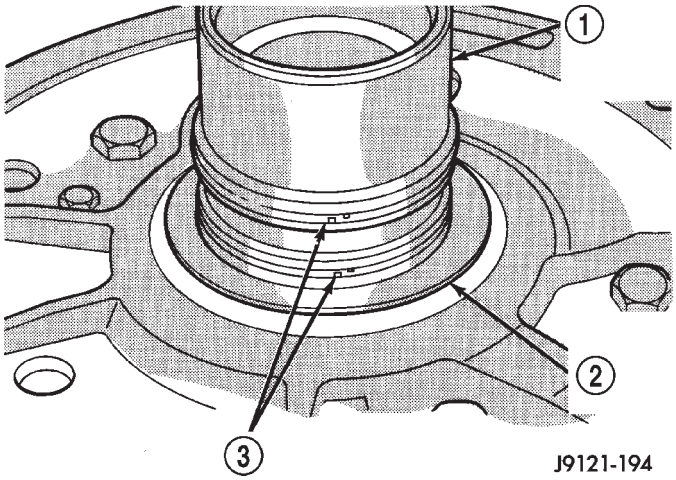

Fig. 55 Reaction Shaft Support Seal Rings And Front Clutch Thrust Washer

1 - REACTION SHAFT SUPPORT HUB
2 - FRONT CLUTCH THRUST WASHER
3 - SEAL RINGS

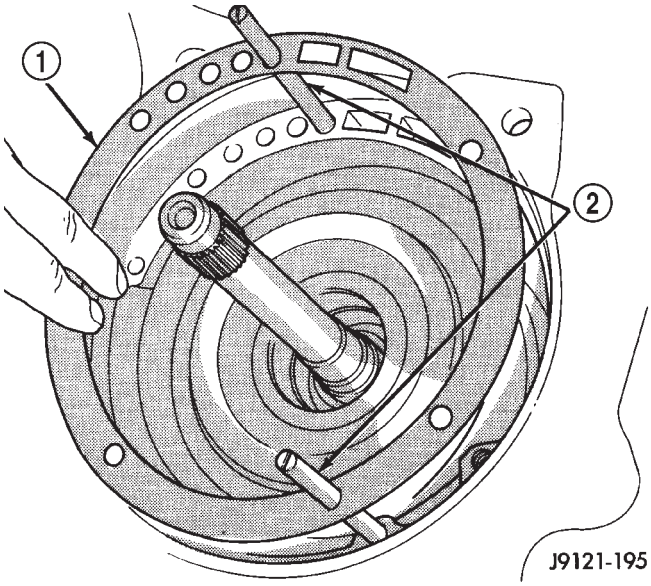

Fig. 56 Installing Pilot Studs And Oil Pump Gasket

1 - OIL PUMP GASKET
2 - PILOT STUD TOOLS C-3288-B

AUTOMATIC TRANSMISSION - 42RE (Continued)

(27) Install oil pump (Fig. 57). Align and position pump on pilot studs. Slide pump down studs and work it into front clutch hub and case by hand. Then install 2 or 3 pump bolts to hold pump in place.

(28) Remove pilot stud tools and install remaining oil pump bolts. Tighten bolts alternately in diagonal pattern to 20 N·m (15 ft. lbs.).

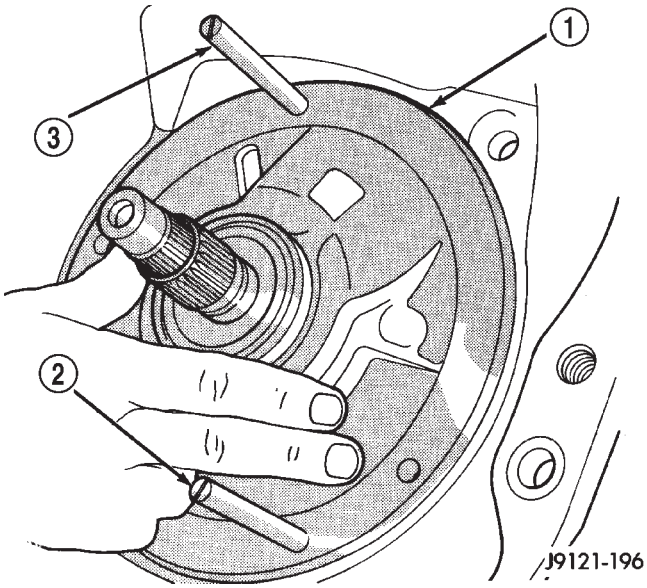

Fig. 57 Installing Oil

1 - OIL PUMP
2 - PILOT STUD TOOL
3 - PILOT STUD TOOL

(29) Measure input shaft end play (Fig. 58).

NOTE: If end play is incorrect, transmission is incorrectly assembled, or the intermediate shaft thrust washer is incorrect. The intermediate shaft thrust washer is selective.

(a) Attach Adapter 8266-6 to Handle 8266-8.

(b) Attach dial indicator C-3339 to Handle 8266-8.

(c) Install the assembled tool onto the input shaft of the transmission and tighten the retaining screw on Adapter 8266-6 to secure it to the input shaft.

(d) Position the dial indicator plunger against a flat spot on the oil pump and zero the dial indicator.

(e) Move input shaft in and out and record reading. End play should be 0.56 - 2.31 mm (0.022 - 0.091 in.). Adjust as necessary.

(30) Install accumulator piston and inner and outer springs (Fig. 59).

(31) Verify that valve body solenoid harness is secured in 3-4 accumulator housing cover plate.

(32) Install valve body as follows:

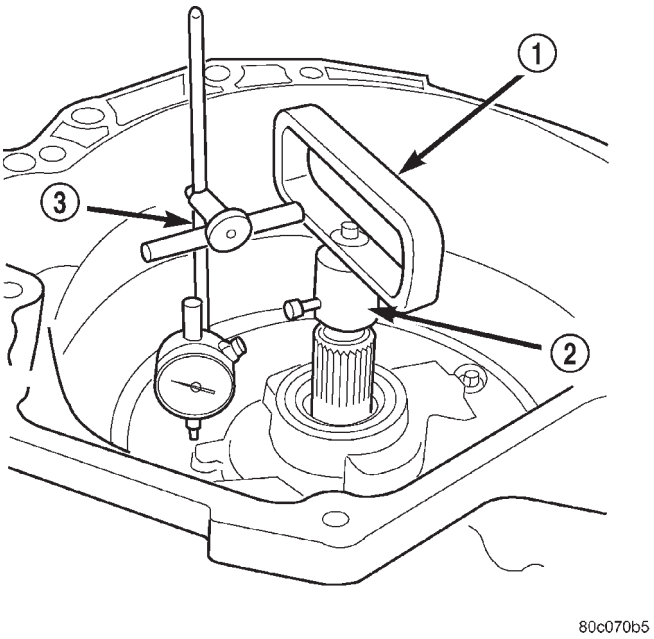

Fig. 58 Checking Input Shaft End Play

1 - TOOL 8266-8
2 - TOOL 8266-6
3 - TOOL C-3339

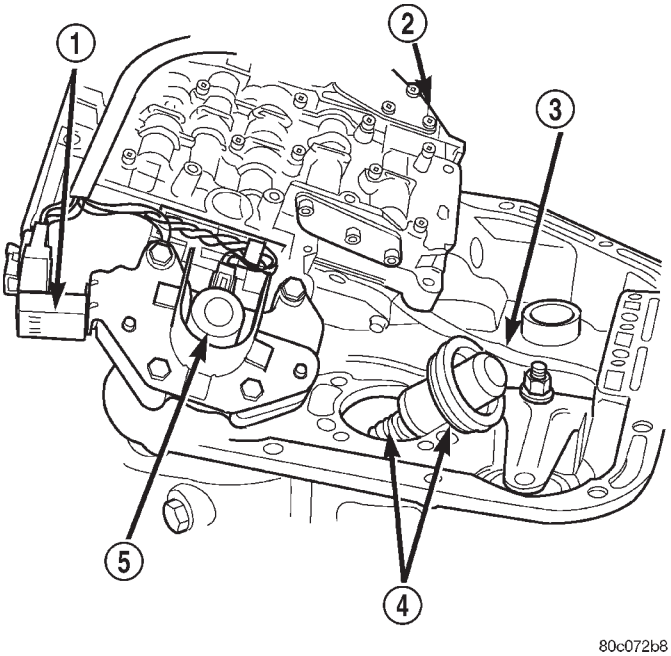

Fig. 59 Accumulator Piston And Springs

1 - GOVERNOR PRESSURE SENSOR
2 - VALVE BODY
3 - PARK ROD
4 - ACCUMULATOR PISTON
5 - GOVERNOR PRESSURE SOLENOID

AUTOMATIC TRANSMISSION - 42RE (Continued)

(a) Align and carefully insert park rod into pawl. Rod will make click noise as it enters pawl. Move rod slightly to check engagement.

(b) Align and seat valve body on case. Be sure manual lever shaft and overdrive connector are fully seated in case. Also be sure valve body wiring is not pinched or kinked.

(c) Install and start all valve body attaching bolts by hand. Then tighten bolts evenly, in a diagonal pattern to 12 N·m (105 in. lbs.) torque. Do not overtighten valve body bolts. This could result in distortion and cross leakage after installation.

CAUTION: It is possible for the park rod to displace into a cavity just above the pawl sprag during installation. Make sure the rod is actually engaged in the pawl and has not displaced into the cavity.

(33) Install new filter on valve body. Tighten filter screws to 4 N·m (35 in. lbs.).

(34) Adjust front and rear bands.

(35) Install seal on park/neutral position switch. Then install and tighten switch to 34 N·m (25 ft. lbs.).

(36) Install magnet in oil pan. Magnet goes on small protrusion at corner of pan.

(37) Position new oil pan gasket on case and install oil pan. Tighten pan bolts to 17 N·m (13 ft. lbs.).

(38) Install new valve body manual shaft seal in case (Fig. 60). Lubricate seal lip and manual shaft with petroleum jelly. Start seal over shaft and into case. Seat seal with 15/16 inch, deep well socket.

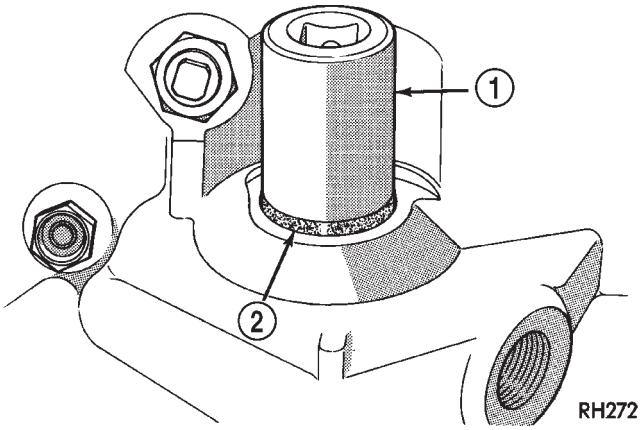

Fig. 60 Installing Manual Lever Shaft Seal

1 - 15/16'' SOCKET
2 - SEAL

(39) Install throttle valve and shift selector levers on valve body manual lever shaft.

INSTALLATION

(1) Check torque converter hub and hub drive notches for sharp edges burrs, scratches, or nicks. Polish the hub and notches with 320/400 grit paper and crocus cloth if necessary. The hub must be smooth to avoid damaging pump seal during installation.

(2) Lubricate oil pump seal lip with transmission fluid.

(3) Align converter and oil pump.

(4) Carefully insert converter in oil pump. Then rotate converter back and forth until fully seated in pump gears.

(5) Check converter seating with steel scale and straightedge (Fig. 61). Surface of converter lugs should be 1/2 in. to rear of straightedge when converter is fully seated.

(6) Temporarily secure converter with C-clamp.

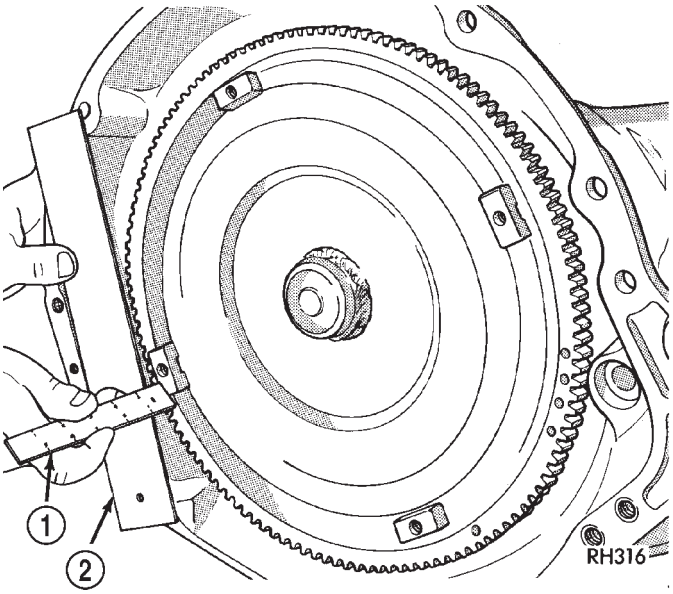

Fig. 61 Checking Torque Converter Seating - Typical

1 - SCALE
2 - STRAIGHTEDGE

(7) Position transmission on jack and secure it with chains.

(8) Check condition of converter driveplate. Replace the plate if cracked, distorted or damaged. Also be sure transmission dowel pins are seated in engine block and protrude far enough to hold transmission in alignment.

(9) Apply a light coating of Mopar® High Temp grease to the torque converter hub pocket in the rear of the crankshaft

(10) Raise transmission and align converter with drive plate and converter housing with engine block.

(11) Move transmission forward. Then raise, lower or tilt transmission to align converter housing with engine block dowels.

AUTOMATIC TRANSMISSION - 42RE (Continued)

(12) Carefully work transmission forward and over engine block dowels until converter hub is seated in crankshaft.

(13) Install two bolts to attach converter housing to engine.

(14) Install the upper transmission bending braces to the torque converter housing and the overdrive unit. Tighten the bolts to 41 N·m (30 ft.lbs.).

(15) Install remaining torque converter housing to engine bolts. Tighten to 68 N·m (50 ft.lbs.).

(16) Install rear transmission crossmember. Tighten crossmember to frame bolts to 68 N·m (50 ft.lbs.).

(17) Install rear support to transmission. Tighten bolts to 47 N·m (35 ft.lbs.).

(18) Lower transmission onto crossmember and install bolts attaching transmission mount to crossmember. Tighten clevis bracket to crossmember bolts to 47 N·m (35 ft.lbs.). Tighten the clevis bracket to rear support bolt to 68 N·m (50 ft.lbs.).

(19) Remove engine support fixture.

(20) Install crankshaft position sensor. (Refer to 14 - FUEL SYSTEM/FUEL INJECTION/CRANKSHAFT POSITION SENSOR - INSTALLATION)

(21) Install new plastic retainer grommet on any shift cable that was disconnected. Grommets should not be reused. Use pry tool to remove rod from grommet and cut away old grommet. Use pliers to snap new grommet into cable and to snap grommet onto lever.

(22) Connect gearshift and throttle valve cable to transmission.

(23) Connect wires to park/neutral position switch and transmission solenoid connector. Be sure transmission harnesses are properly routed.

CAUTION: It is essential that correct length bolts be used to attach the converter to the driveplate. Bolts that are too long will damage the clutch surface inside the converter.

(24) Install all torque converter-to-driveplate bolts by hand.

(25) Verify that the torque converter is pulled flush to the driveplate. Tighten bolts to 31 N·m (270 in. lbs.).

(26) Install converter housing access cover. Tighten bolt to 23 N·m (200 in.lbs.).

(27) Install the bell housing brace to the torque converter cover and the engine to transmission bending brace. Tighten the bolts and nut to 41 N·m (30 ft.lbs.).

(28) Install starter motor (Refer to 8 - ELECTRICAL/STARTING/STARTER MOTOR - INSTALLATION) and cooler line bracket.

(29) Connect cooler lines to transmission.

(30) Install transmission fill tube. Install new seal on tube before installation.

(31) Install exhaust components.

(32) Install transfer case. Tighten transfer case nuts to 35 N·m (26 ft.lbs.).

(33) Install the transfer case shift cable to the cable support bracket and the transfer case shift lever.

(34) Align and connect propeller shaft(s).

(35) Adjust gearshift linkage and throttle valve cable if necessary.

(36) Lower vehicle.

(37) Fill transmission with Mopar® ATF +4, type 9602, fluid.

SCHEMATICS AND DIAGRAMS

HYDRAULIC SCHEMATICS

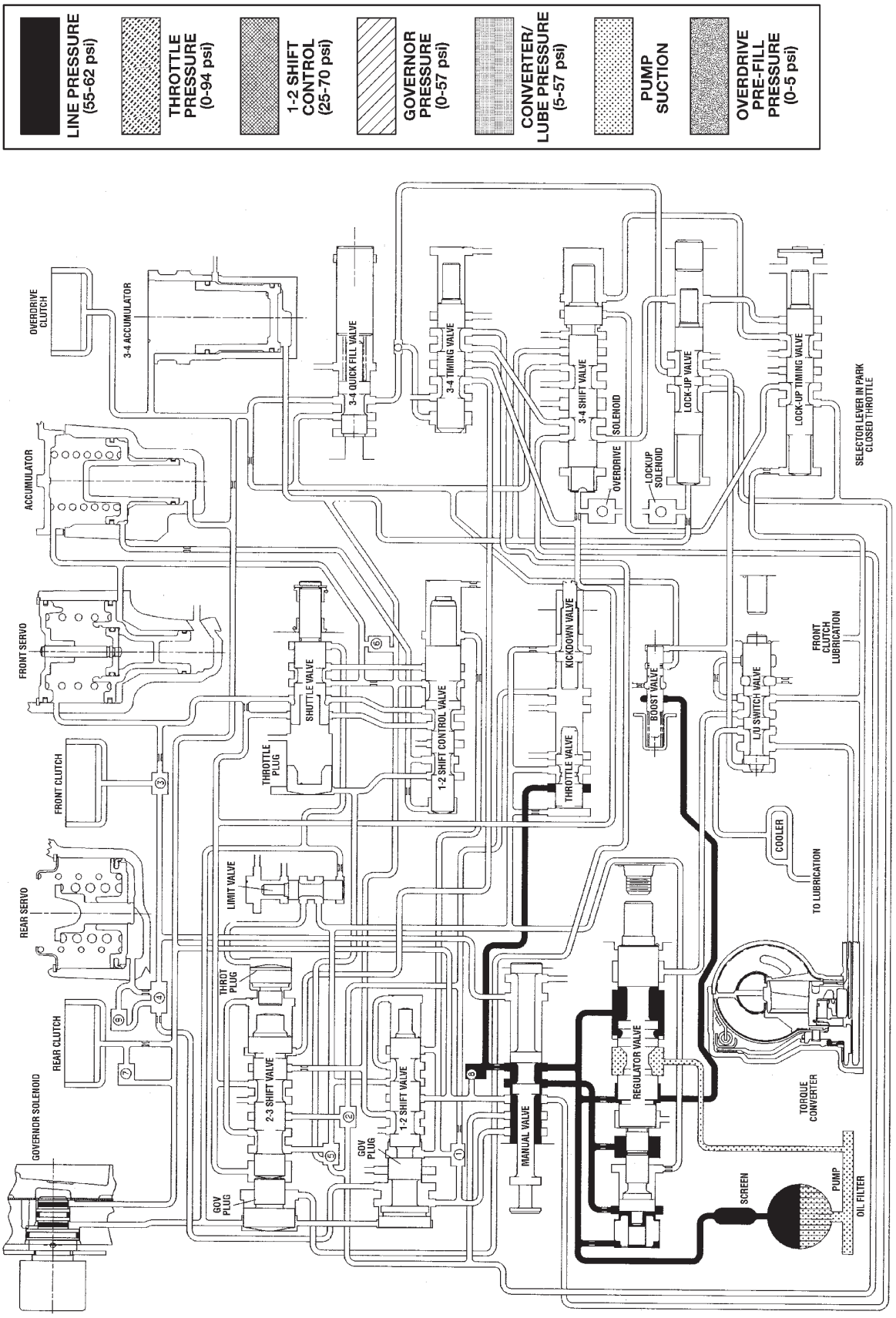

HYDRAULIC FLOW IN PARK

SCHEMATICS AND DIAGRAMS (Continued)

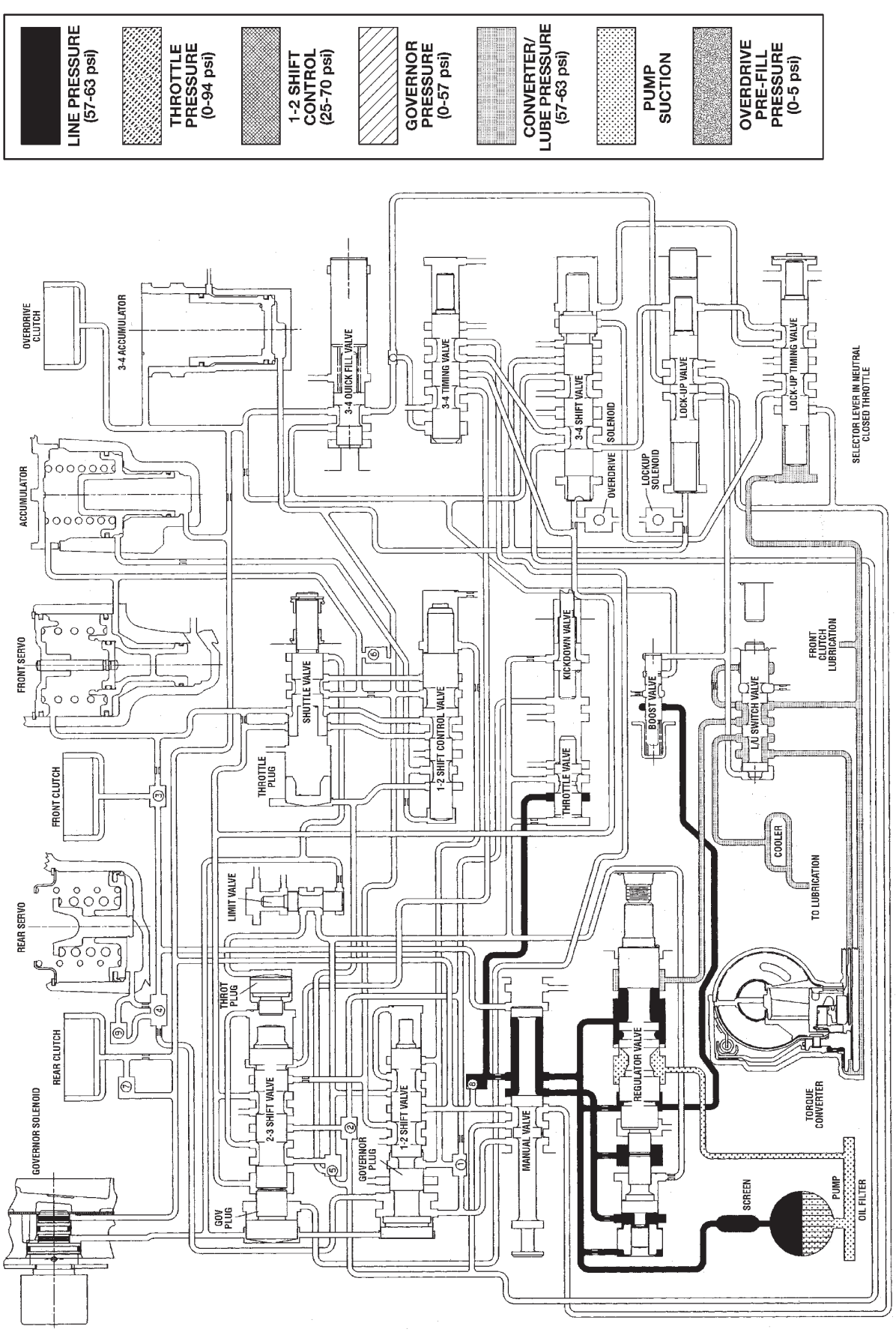

HYDRAULIC FLOW IN NEUTRAL

SCHEMATICS AND DIAGRAMS (Continued)

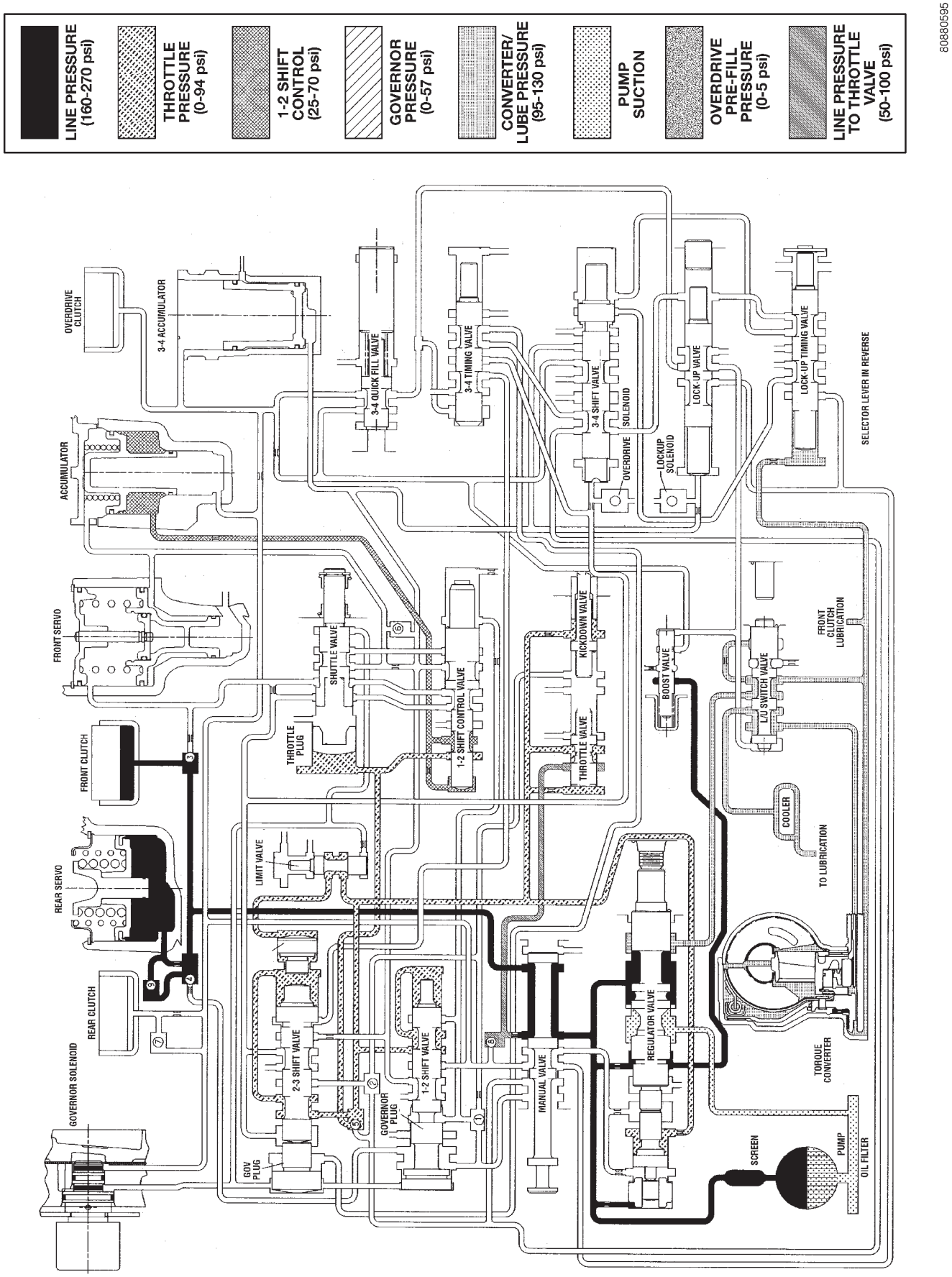

HYDRAULIC FLOW IN REVERSE

SCHEMATICS AND DIAGRAMS (Continued)

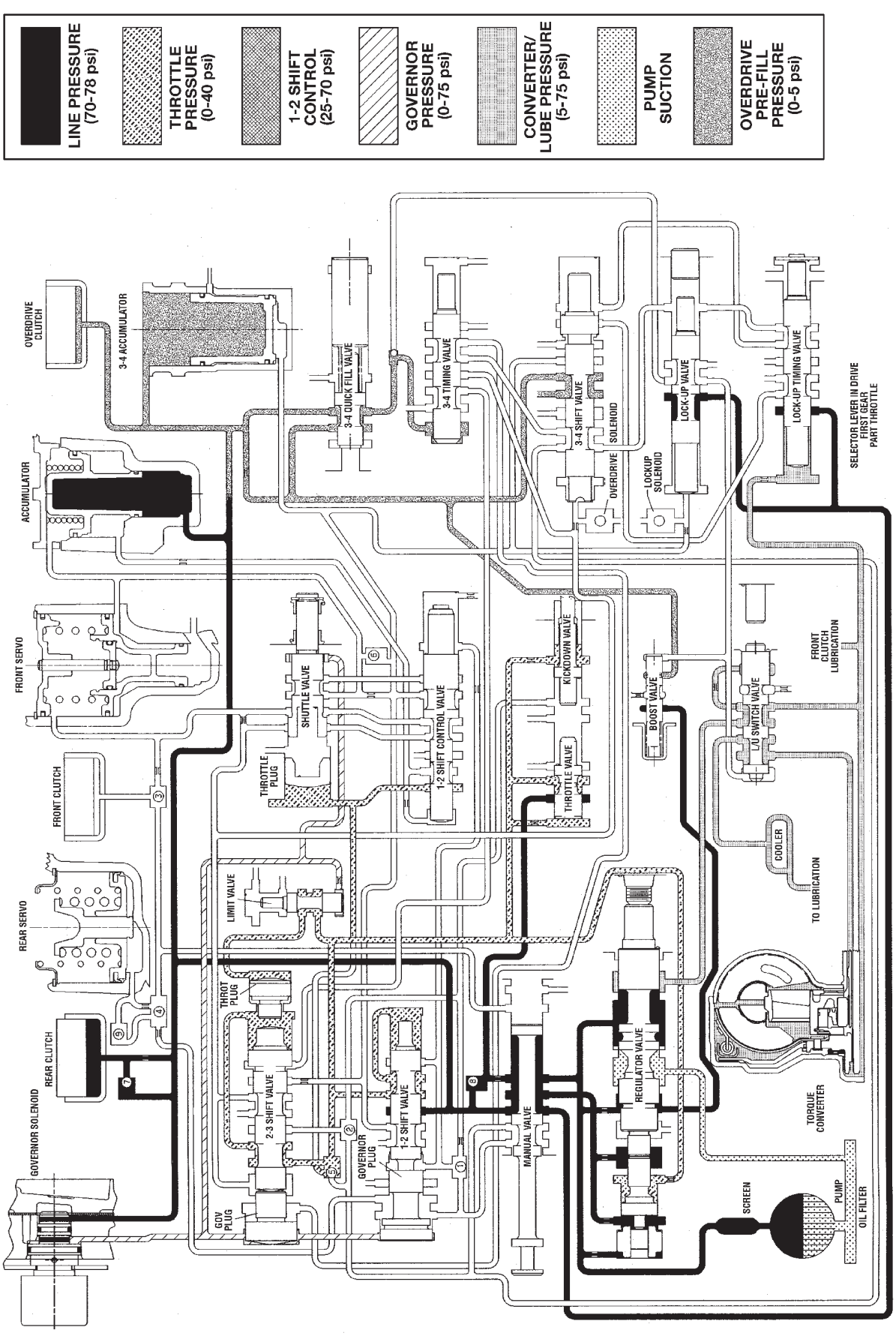

HYDRAULIC FLOW IN DRIVE FIRST GEAR

SCHEMATICS AND DIAGRAMS (Continued)

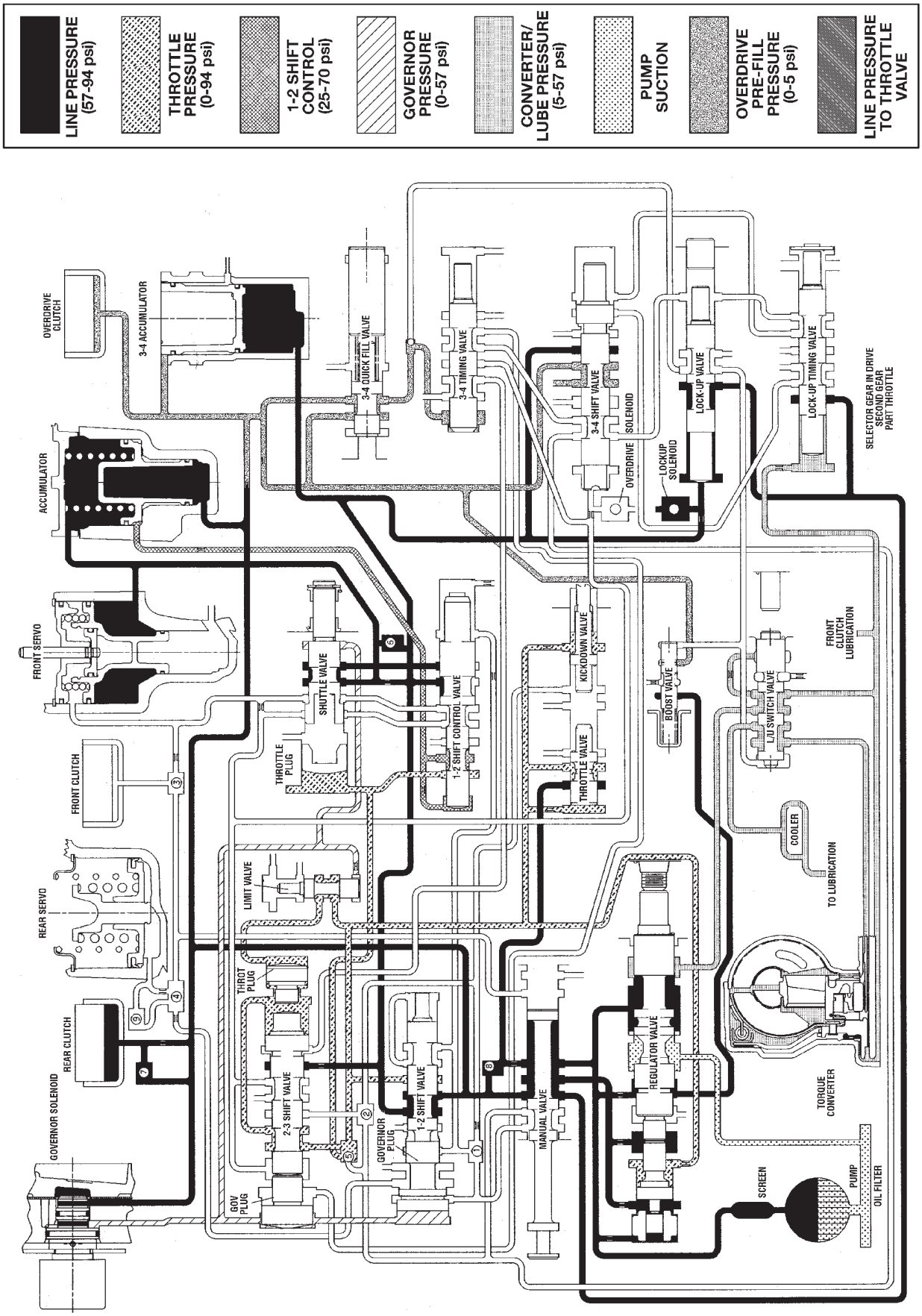

HYDRAULIC FLOW IN DRIVE SECOND GEAR

SCHEMATICS AND DIAGRAMS (Continued)

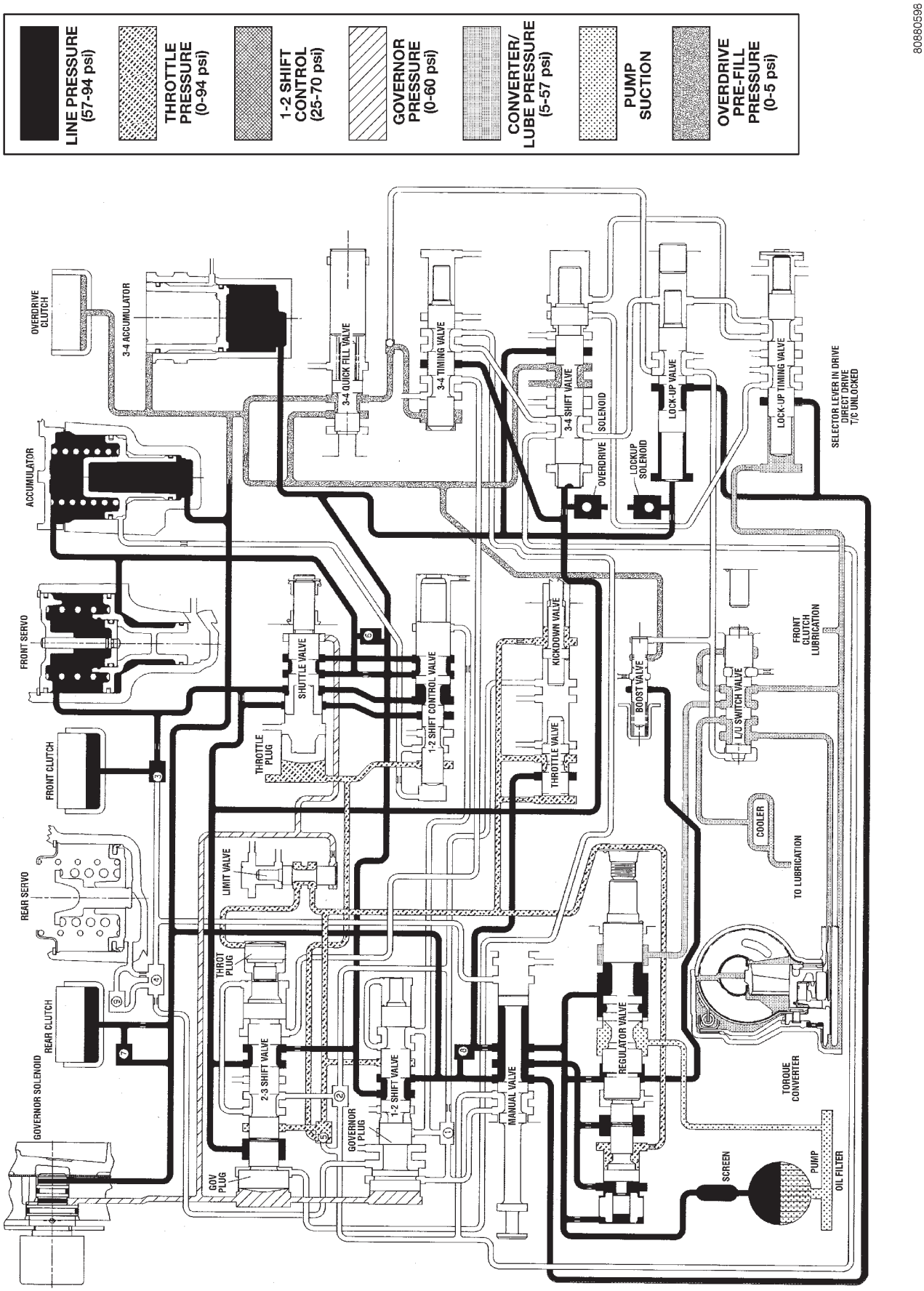

HYDRAULIC FLOW IN DRIVE THIRD GEAR (CONVERTER CLUTCH NOT APPLIED)

SCHEMATICS AND DIAGRAMS (Continued)

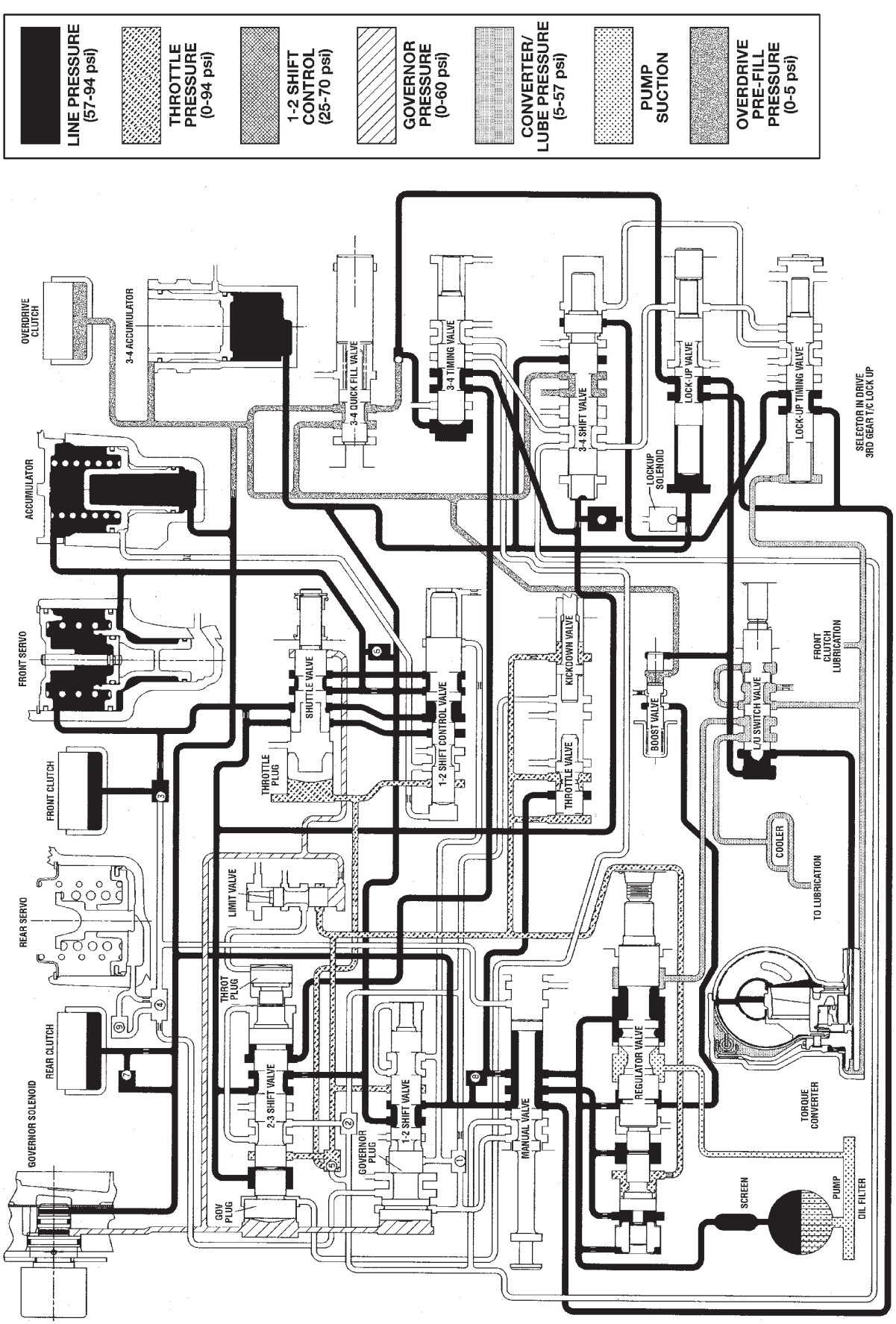

HYDRAULIC FLOW IN DRIVE THIRD GEAR (CONVERTER CLUTCH APPLIED)

SCHEMATICS AND DIAGRAMS (Continued)

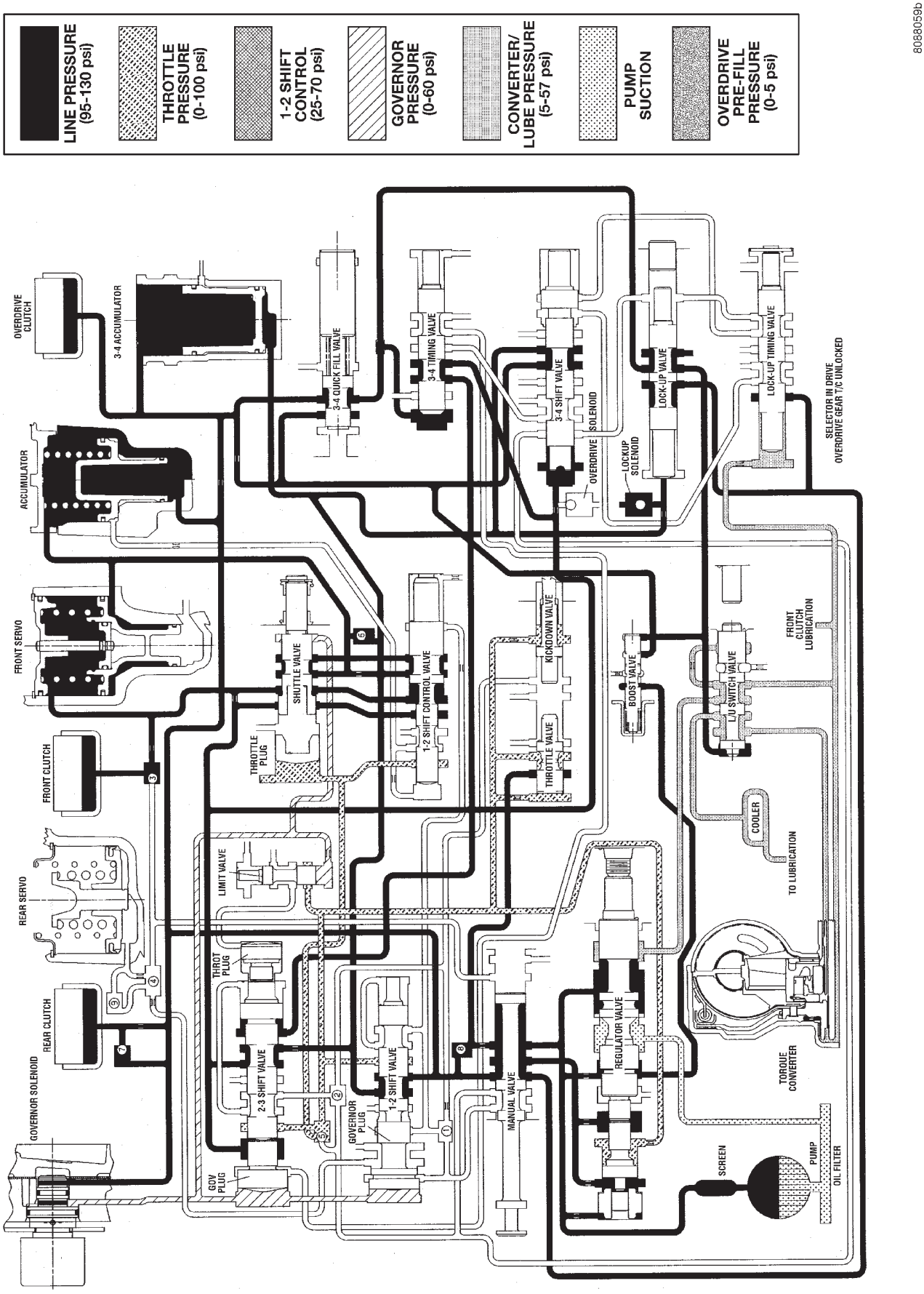

HYDRAULIC FLOW IN DRIVE FOURTH GEAR (CONVERTER CLUTCH NOT APPLIED)

SCHEMATICS AND DIAGRAMS (Continued)

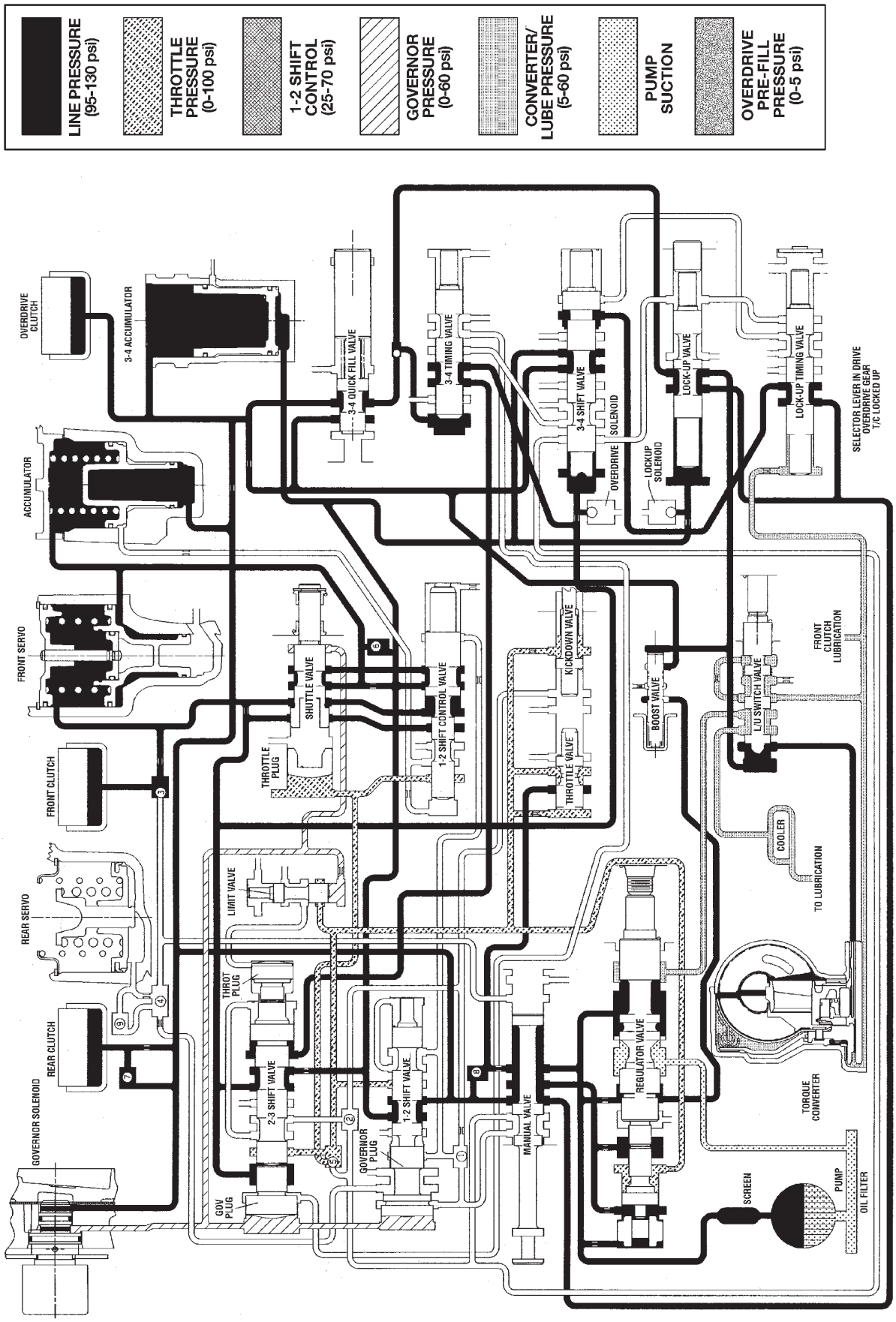

HYDRAULIC FLOW IN DRIVE FOURTH GEAR (CONVERTER CLUTCH APPLIED)

SCHEMATICS AND DIAGRAMS (Continued)

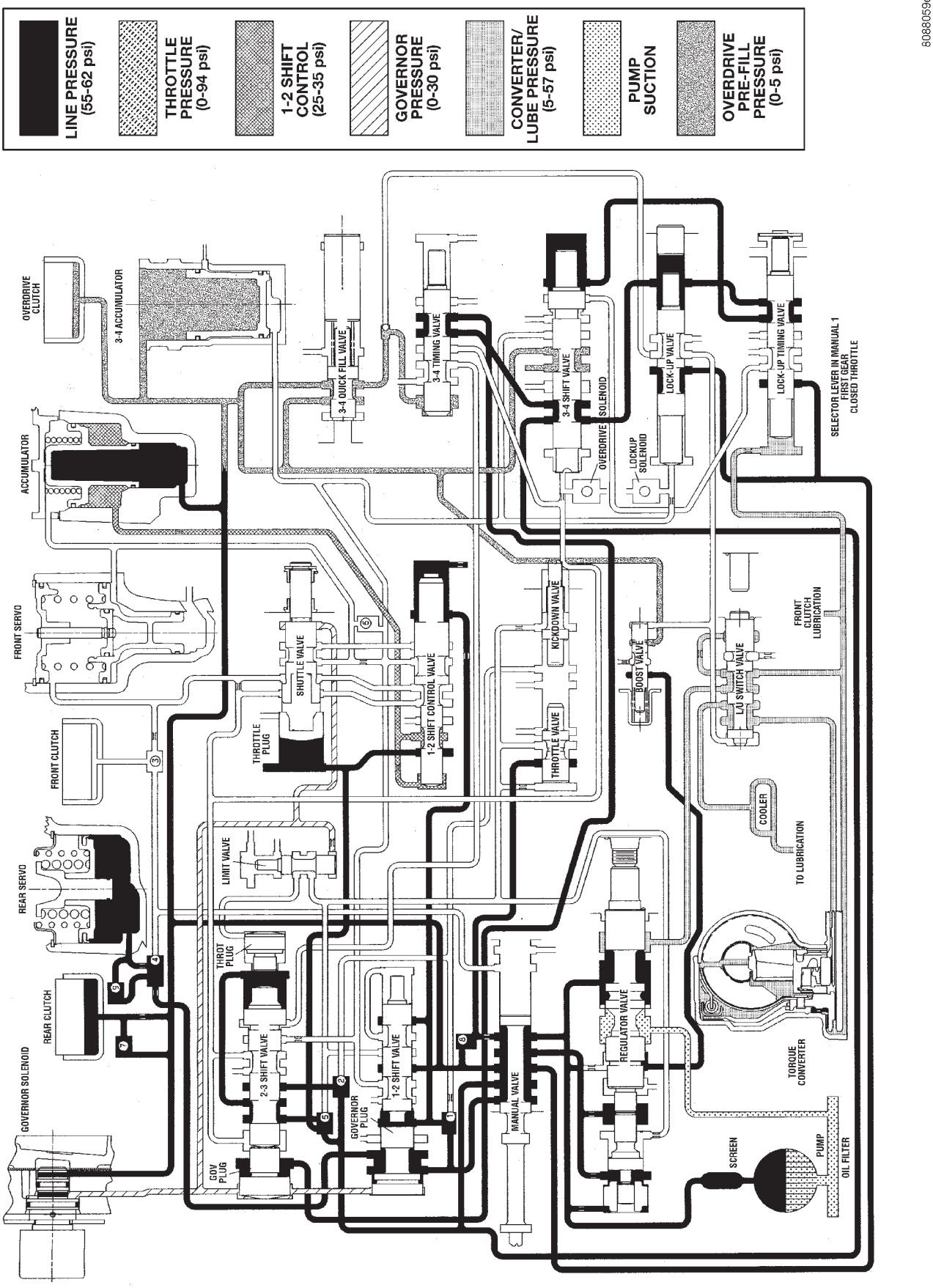

HYDRAULIC FLOW IN MANUAL LOW (1)

SCHEMATICS AND DIAGRAMS (Continued)

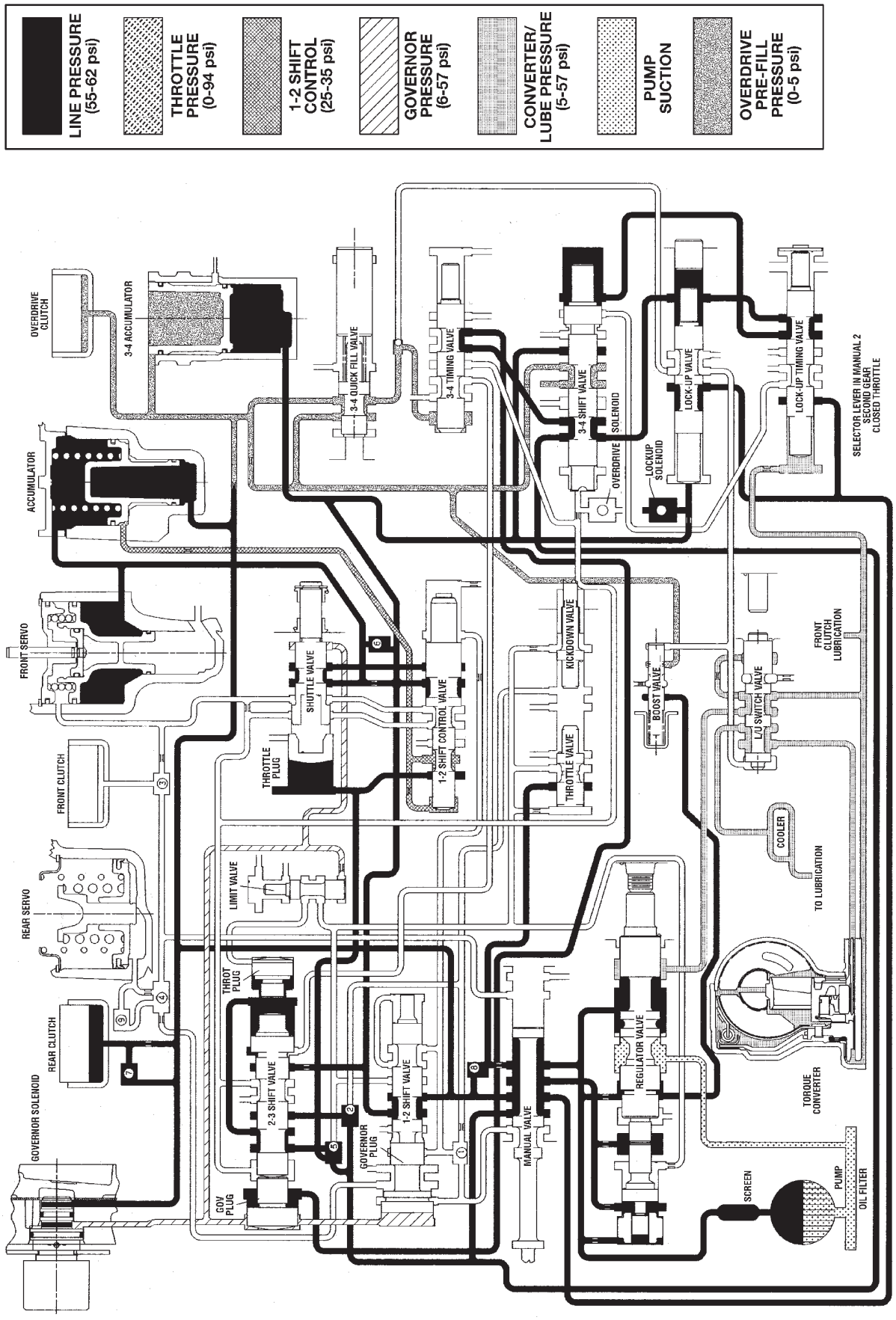

HYDRAULIC FLOW IN MANUAL SECOND (2)

SCHEMATICS AND DIAGRAMS (Continued)

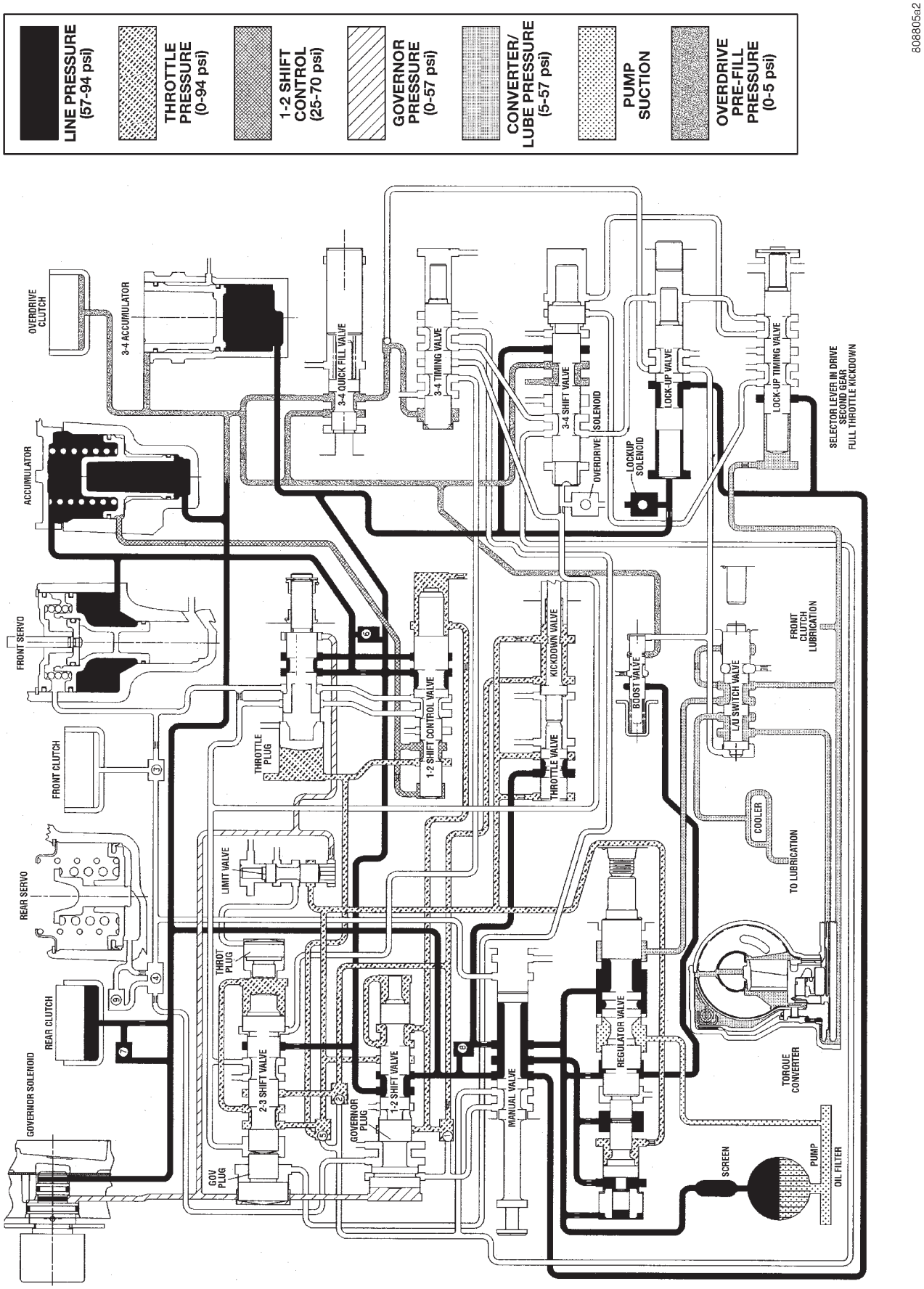

HYDRAULIC FLOW DURING FULL THROTTLE 3-2 DOWNSHIFT (PASSING

SPECIFICATIONS

TRANSMISSION

GENERAL

Component	Metric	Inch
Planetary end play	0.127-1.22 mm	0.005-0.048 in.
Input shaft end play	0.56-2.31 mm	0.022-0.091 in.
Clutch pack clearance/ Front.	1.70-3.40mm	0.067-0.134 in.
Clutch pack clearance/ Rear.	0.559-0.914 mm	0.022-0.036 in.
Front clutch	4 discs	
Rear clutch	4 discs	
Overdrive clutch	3 discs	
Direct clutch	6 discs	
42RE Band adjustment from 72 in. lbs.		
Front band	Back off 3 turns	
Rear band	Back off 4 turns	
Recommended fluid	Mopar® ATF +4, type 9602	

GEAR RATIOS

1ST GEAR	2.74:1
2ND GEAR	1.54:1
3RD GEAR	1.0:1
4TH GEAR	0.69:1
REVERSE	2.21:1

THRUST WASHER/SPACER/SNAP-RING DIMENSIONS

Component	Metric	Inch
Front clutch thrust washer (reaction shaft support hub)	1.55 mm	0.061 in.
Rear clutch thrust washer (clutch retainer)	1.55 mm	0.061 in.
Intermediate shaft thrust plate (shaft hub pilot)	Select fit to set end play	
Output shaft thrust washer (rear clutch hub)	1.5-1.6 mm	0.060-0.063 in.
Rear clutch pack snap-ring	1.5 mm	0.060 in.
	1.95 mm	0.076 in.
	2.45 mm	0.098 in.
Planetary geartrain snap-ring (at front of output shaft)	Select fit (three thicknesses avalible)	
Overdrive piston thrust plate	Thrust plate and spacer are select fit. Refer to size charts and selection procedures in Overdrive Unit D&A procedures	
Intermiediate shaft spacer		

SPECIFICATIONS (Continued)

PRESSURE TEST

Overdrive clutch	Fourth gear only	Pressure should be 469-496 kPa (68-72 psi) with closed throttle and increase to 620-896 kPa (90-130 psi) at 1/2 to 3/4 throttle.
Line pressure (at accumulator)	Closed throttle	372-414 kPa (54-60 psi).
Front servo	Third gear only	No more than 21 kPa (3 psi) lower than line pressure.
Rear servo	1 range R range	No more than 21 kPa (3 psi) lower than line pressure. 1103 kPa (160 psi) at idle, builds to 1862 kPa (270 psi) at 1600 rpm.
Governor	D range closed throttle	Pressure should respond smoothly to changes in mph and return to 0-7 kPa (0-1.5 psi) when stopped with transmission in D, 1, 2. Pressure above 7 kPa (1.5 psi) at stand still will prevent transmission from downshifting.

TORQUE SPECIFICATIONS

DESCRIPTION	N·m	Ft. Lbs.	In. Lbs.
Fitting, cooler line at trans	18	13	-
Bolt, torque convertor	31	-	270
Bolt, clevis bracket to crossmember	47	35	-
Bolt, clevis bracket to rear support	68	50	-
Bolt, driveplate to crankshaft	75	55	-
Plug, front band reaction	17	13	-
Locknut, front band adj.	34	25	-
Switch, park/neutral	34	25	-
Bolt, fluid pan	17	13	-
Screws, fluid filter	4	-	35
Bolt, oil pump	20	15	-
Bolt, overrunning clutch cam	17	13	-
Bolt, O/D to trans.	34	25	-
Bolt, O/D piston retainer	17	13	-
Plug, pressure test port	14	10	-
Bolt, reaction shaft support	20	15	-
Locknut, rear band	41	30	-
Bolt, speedometer adapter	11	-	100
Screw, vehicle speed sensor	2.5	-	21
Bolt, valve body to case	12	-	100
Sensor, trans speed	27	20	-
Screw, solenoid wiring connector	4	-	35
Screw, solenoid to transfer plate	4	-	35

SPECIAL TOOLS

RE TRANSMISSIONS

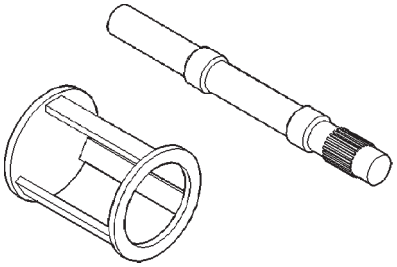

Shaft, Spring Compressor and Alignment - 6227

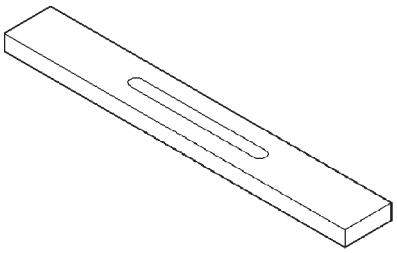

Bar, Gauge - 6311

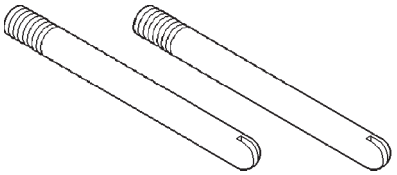

Pilot, Extension Housing - C-3288-B

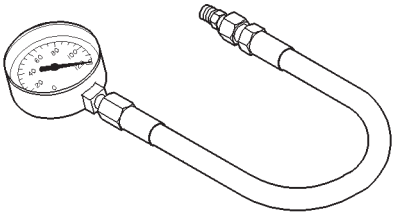

Gauge, Oil Pressure - C-3292

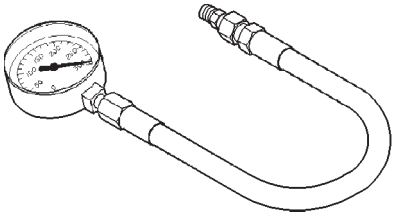

Gauge, Oil Pressure - C-3293SP

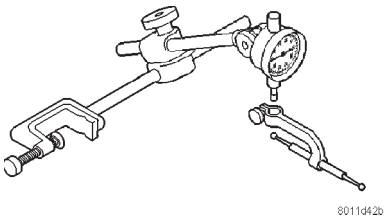

Dial Indicator - C-3339

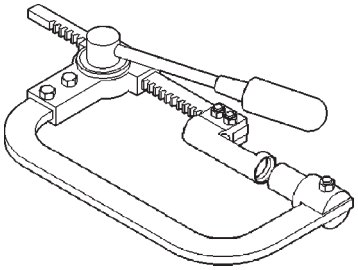

Compressor, Spring - C-3422-C

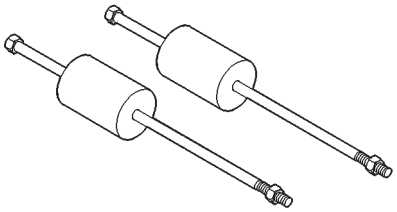

Puller, Slide Hammer - C-3752

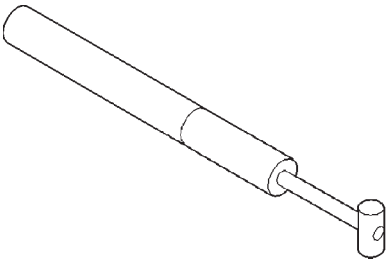

Gauge, Throttle Setting - C-3763

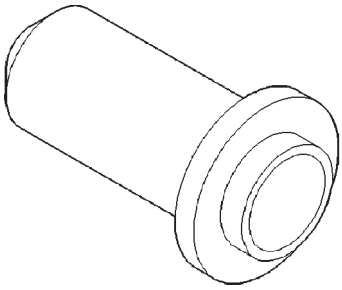

Installer, Seal - C-3860-A

SPECIAL TOOLS (Continued)

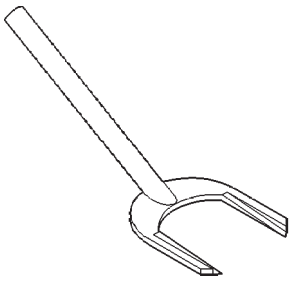

Remover, Seal - C-3985-B

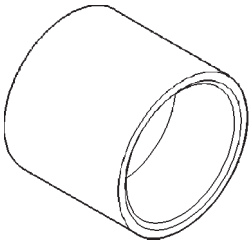

Installer, Seal - C-3995-A

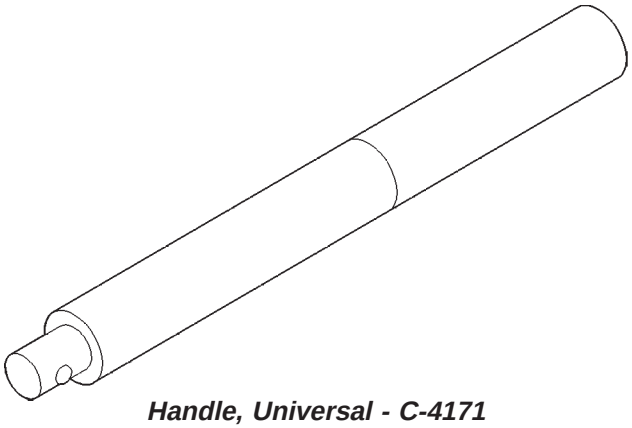

Handle, Universal - C-4171

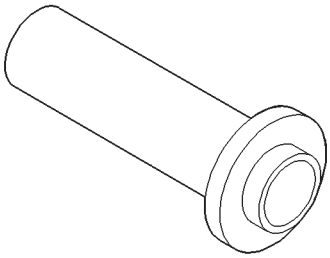

Installer, Seal - C-4193-A

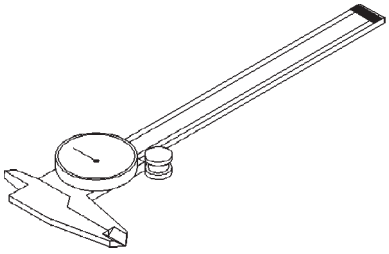

Dial Caliper - C-4962

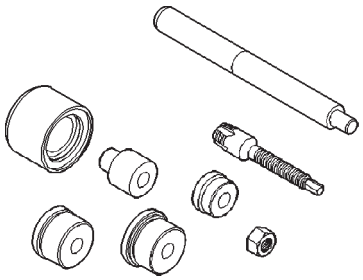

Kit, Bushing Remover/Installer - C-3887-J

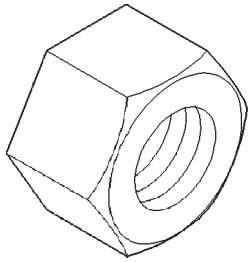

Nut, Bushing Remover - SP-1191, From kit C-3887-J

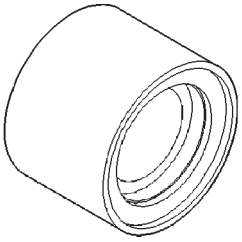

Cup, Bushing Remover - SP-3633, From kit C-3887-J

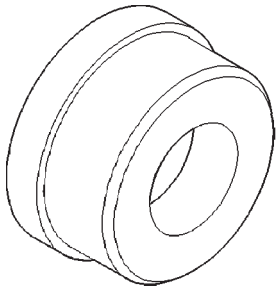

Remover, Bushing - SP-3551

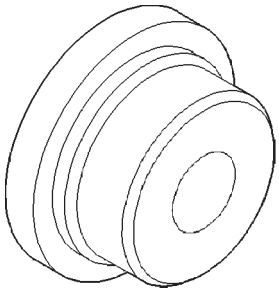

Installer, Bushing - SP-5117

SPECIAL TOOLS (Continued)

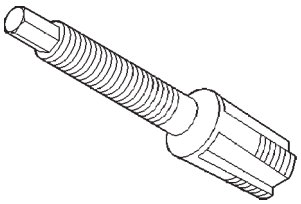

Remover, Bushing - SP-5324

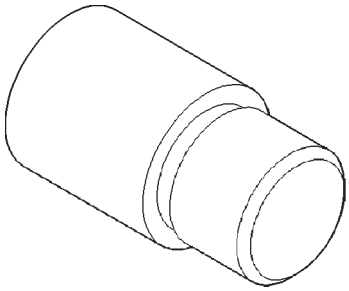

Installer, Bushing - SP-5325

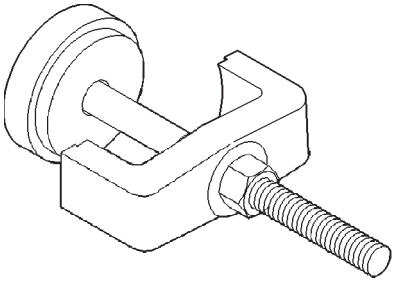

Compressor, Spring - C-3575-A

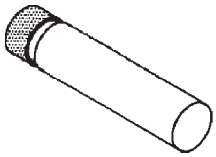

Gauge - 6312

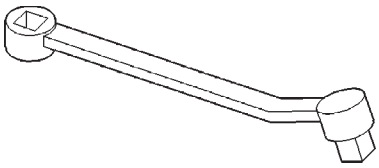

Adapter, Band Adjuster - C-3705

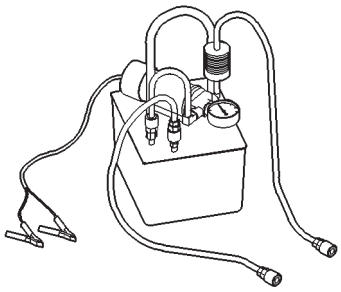

Flusher, Oil Cooler - 6906-B

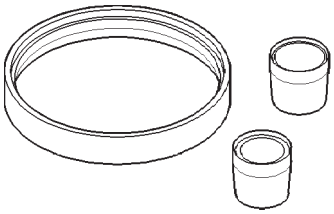

Installer, Piston - 8114

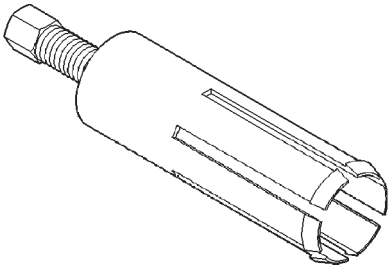

Remover, Bushing - 6957

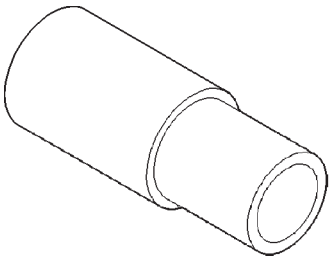

Installer, Bushing - 6951

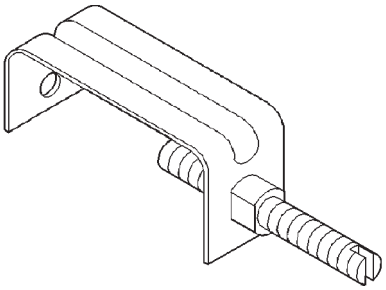

Retainer, Detent Ball and Spring - 6583

ACCUMULATOR

DESCRIPTION

The accumulator (Fig. 62) is a hydraulic device that has the sole purpose of cushioning the application of a band or clutch. The accumulator consists of a dual-land piston and a spring located in a bore in the transmission case. The 3-4 accumulator is located in a housing attached to the side of the valve body (Fig. 63).

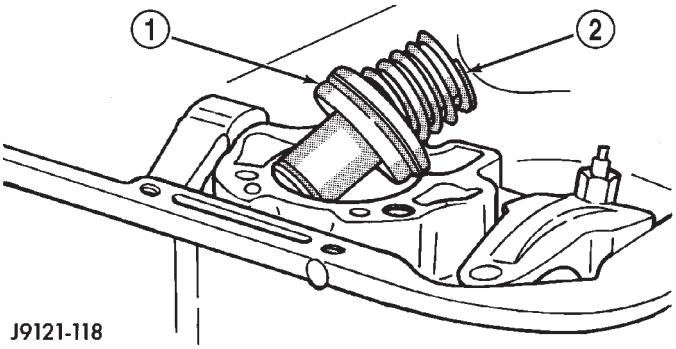

Fig. 62 Accumulator

1 - ACCUMULATOR PISTON
2 - PISTON SPRING

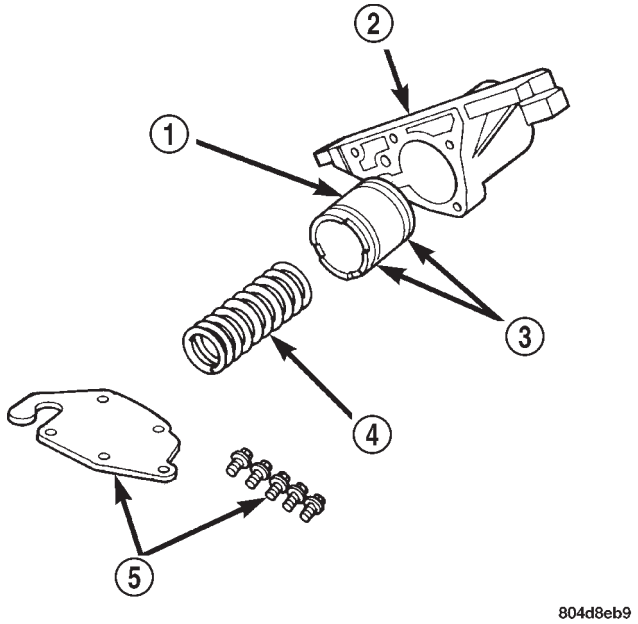

Fig. 63 3-4 Accumulator and Housing

1 - ACCUMULATOR PISTON
2 - 3-4 ACCUMULATOR HOUSING
3 - TEFLON SEALS
4 - PISTON SPRING
5 - COVER PLATE AND SCREWS

OPERATION

Both the accumulator and the 3-4 accumulator function the same. Line pressure is directed to the small end of the piston when the transmission is placed into a DRIVE position (Fig. 64), bottoming it against the accumulator plate. When the 1-2 upshift occurs (Fig. 65), line pressure is directed to the large end of the piston and then to the kickdown servo. As the line pressure reaches the accumulator, the combination of spring pressure and line pressure forces the piston away from the accumulator plate. This causes a balanced pressure situation, which results in a cushioned band application. After the kickdown servo has become immovable, line pressure will finish pushing the accumulator up into its bore. When the large end of the accumulator piston is seated in its bore, the band or clutch is fully applied.

NOTE: The accumulator is shown in the inverted position for illustrative purposes.

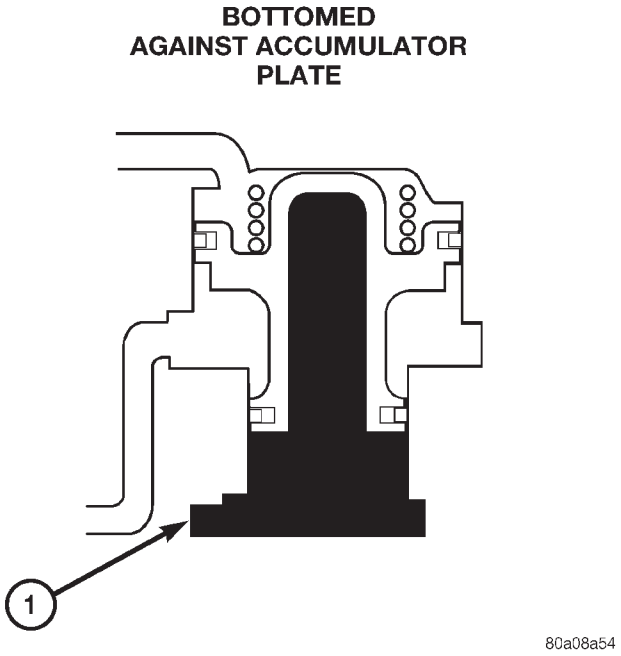

Fig. 64 Accumulator in DRIVE - FIRST GEAR POSITION

1 - LINE PRESSURE

ACCUMULATOR (Continued)

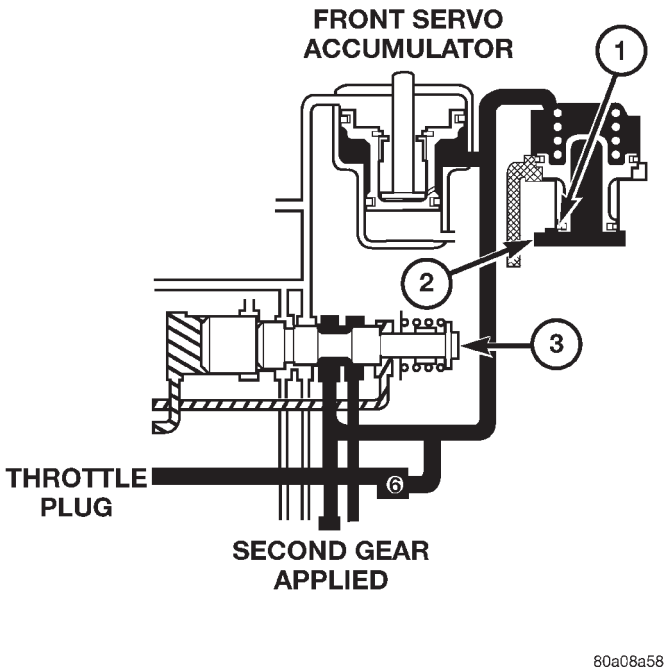

Fig. 65 Accumulator in SECOND Gear Position

1 - BOTTOM OF BORE
2 - LINE PRESSURE
3 - SHUTTLE VALVE

INSPECTION

Inspect the accumulator piston and seal rings (Fig. 66). Replace the seal rings if worn or cut. Replace the piston if chipped or cracked.

Check condition of the accumulator inner and outer springs (Fig. 66). Replace the springs if the coils are cracked, distorted or collapsed.

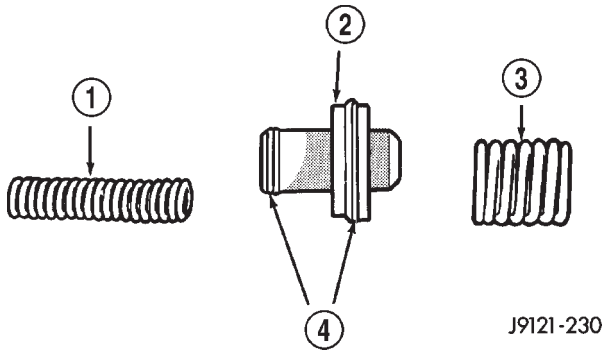

Fig. 66 Accumulator Components

1 - INNER SPRING
2 - ACCUMULATOR PISTON
3 - OUTER SPRING
4 - SEAL RINGS

BANDS

DESCRIPTION

KICKDOWN (FRONT) BAND

The kickdown, or “front”, band (Fig. 67) holds the common sun gear of the planetary gear sets. The front (kickdown) band is made of steel, and faced on its inner circumference with a friction-type lining. One end of the band is anchored to the transmission case, and the other is acted on with a pushing force by a servo piston. The front band is a single-wrap design (the band does not completely encompass/wrap the drum that it holds).

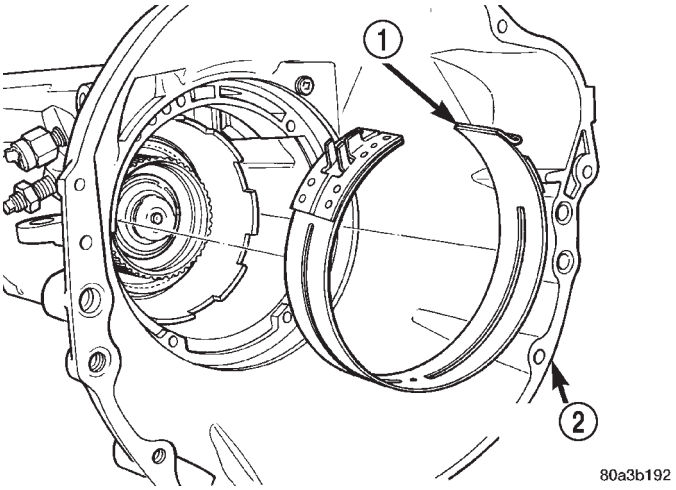

Fig. 67 Front Band

1 - FRONT BAND
2 - TRANSMISSION HOUSING

LOW/REVERSE (REAR) BAND

The low/reverse band, or “rear”, band (Fig. 68) is similar in appearance and operation to the front band. The rear band is slightly different in that it does not use a link bar, but is acted directly on by the apply lever. This is referred to as a double-wrap band design (the drum is completely encompassed/wrapped by the band). The double-wrap band provides a greater holding power in comparison to the single-wrap design.

OPERATION

KICKDOWN (FRONT) BAND

The kickdown band holds the common sun gear of the planetary gear sets by applying and holding the front clutch retainer, which is splined to the sun gear driving shell, and in turn splined directly to the sun gear. The application of the band by the servo is typically done by an apply lever and link bar.

BANDS (Continued)

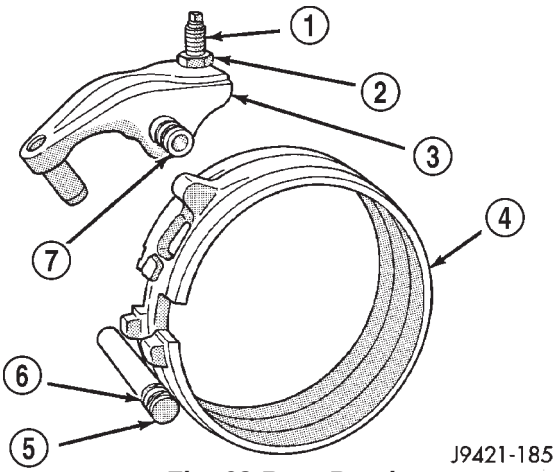

Fig. 68 Rear Band

1 - ADJUSTING SCREW
2 - LOCKNUT
3 - LEVER
4 - REAR BAND
5 - REACTION PIN
6 - O-RINGS
7 - PIVOT PIN

LOW/REVERSE (REAR) BAND

The rear band holds the rear planet carrier stationary by being mounted around and applied to the low/reverse drum.

ADJUSTMENT - BANDS

FRONT BAND

The front (kickdown) band adjusting screw is located on the left side of the transmission case above the manual valve and throttle valve levers.

(1) Raise vehicle.

(2) Loosen band adjusting screw locknut (Fig. 69). Then back locknut off 3-5 turns. Be sure adjusting screw turns freely in case. Apply lubricant to screw threads if necessary.

(3) Tighten band adjusting screw to 8 N·m (72 in. lbs.) torque with Inch Pound Torque Wrench C-3380-A, a 3-in. extension and appropriate Torx™ socket.

CAUTION: If Adapter C-3705 is needed to reach the adjusting screw, tighten the screw to only 5 N·m (47-50 in. lbs.) torque.

(4) Back off front band adjusting screw 3 turns.

(5) Hold adjuster screw in position and tighten locknut to 41 N·m (30 ft. lbs.) torque.

(6) Lower vehicle.

REAR BAND

The transmission oil pan must be removed for access to the rear band adjusting screw.

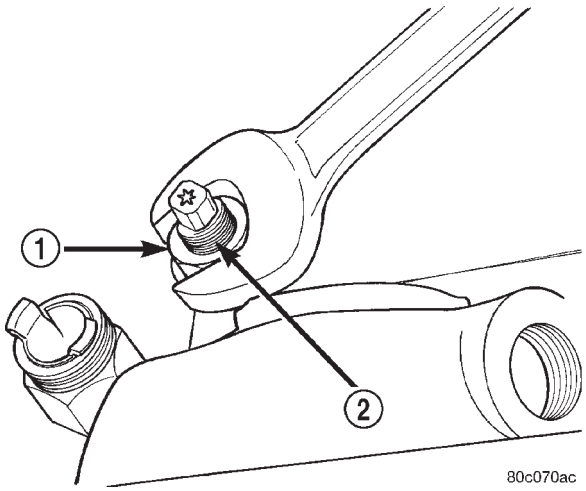

Fig. 69 Front Band Adjustment Screw Location

1 - LOCK-NUT
2 - FRONT BAND ADJUSTER

(1) Raise vehicle.

(2) Remove transmission oil pan and drain fluid.

(3) Loosen band adjusting screw locknut 5-6 turns (Fig. 70). Be sure adjusting screw turns freely in lever.

(4) Tighten adjusting screw to 8 N·m (72 in. lbs.) torque.

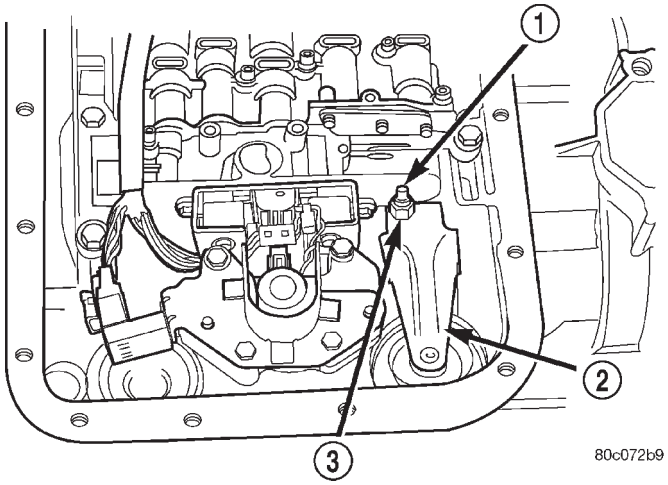

Fig. 70 Rear Band Adjusting Screw Location

1 - ADJUSTING SCREW
2 - REAR BAND LEVER
3 - LOCKNUT

(5) Back off adjusting screw 4 turns.

(6) Hold adjusting screw in place and tighten locknut to 34 N·m (25 ft. lbs.) torque.

(7) Position new gasket on oil pan and install pan on transmission. Tighten pan bolts to 17 N·m (13 ft. lbs.) torque.

(8) Lower vehicle and refill transmission with Mopar® ATF +4, type 9602, fluid.

BRAKE TRANSMISSION SHIFT INTERLOCK MECHANISM

DESCRIPTION

The Brake Transmission Shifter/Ignition Interlock (BTSI), is a cable and solenoid operated system. It interconnects the automatic transmission floor mounted shifter to the steering column ignition switch (Fig. 71).

OPERATION

The system locks the shifter into the PARK position. The interlock system is engaged whenever the ignition switch is in the LOCK or ACCESSORY position. An additional electrically activated feature will prevent shifting out of the PARK position unless the brake pedal is depressed approximately one-half an inch. A magnetic holding device in line with the park lock cable is energized when the ignition is in the RUN position. When the key is in the RUN position and the brake pedal is depressed, the shifter is unlocked and will move into any position. The interlock system also prevents the ignition switch from being turned to the LOCK or ACCESSORY position, unless the shifter is fully locked into the PARK position.

DIAGNOSIS AND TESTING - BRAKE TRANSMISSION SHIFT INTERLOCK

(1) Verify that the key can only be removed in the PARK position

(2) When the shift lever is in PARK And the shift handle pushbutton is in the “OUT” position, the ignition key cylinder should rotate freely from OFF to LOCK. When the shifter is in any other gear or neutral position, the ignition key cylinder should not rotate to the LOCK position.

(3) Shifting out of PARK should be possible when the ignition key cylinder is in the OFF position.

(4) Shifting out of PARK should not be possible while applying normal pushbutton force and ignition key cylinder is in the RUN or START positions unless the foot brake pedal is depressed approximately 1/2 inch (12mm).

(5) Shifting out of PARK should not be possible when the ignition key cylinder is in the ACCESSORY or LOCK positions.

(6) Shifting between any gears, NEUTRAL or into PARK may be done without depressing foot brake pedal with ignition switch in RUN or START positions.

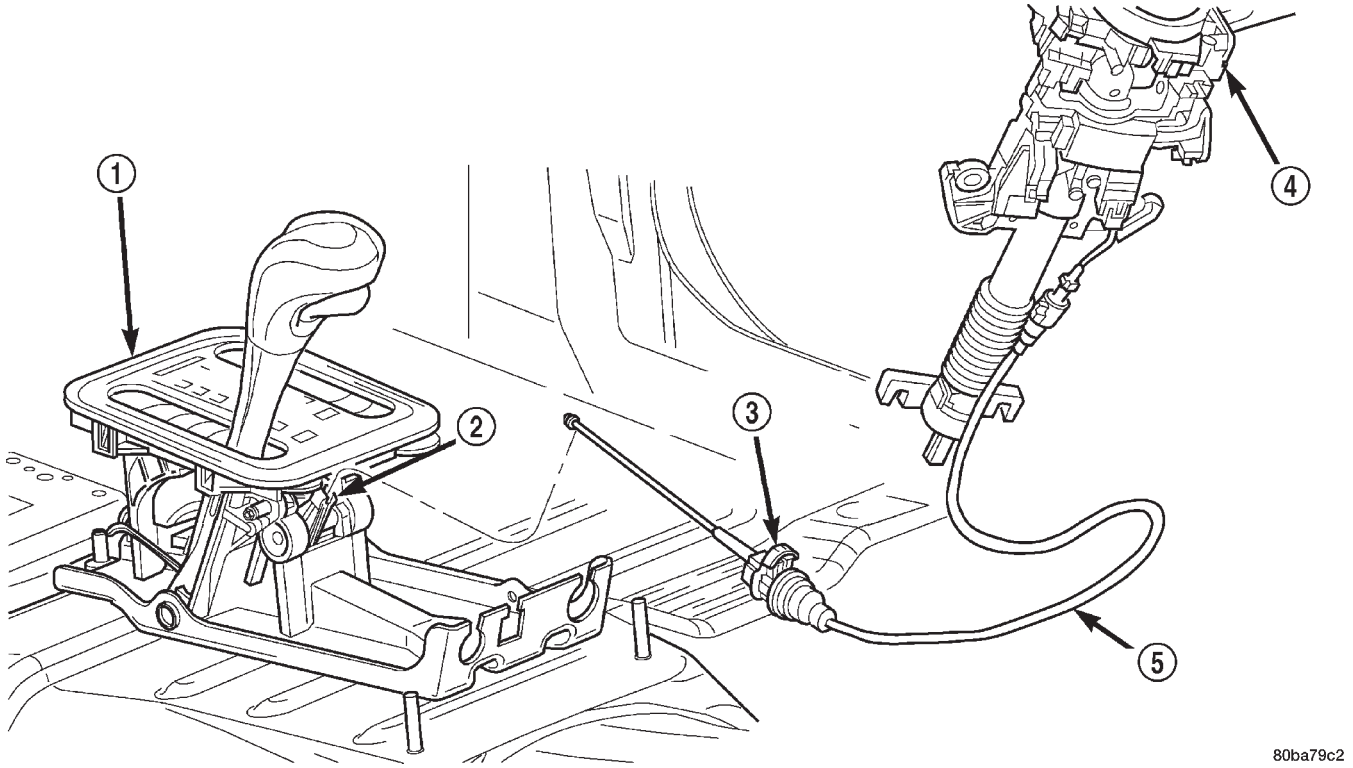

Fig. 71 Ignition Interlock Cable

1 - SHIFT MECHANISM
2 - SHIFTER BTSI LEVER
3 - ADJUSTMENT CLIP
4 - STEERING COLUMN ASSEMBLY
5 - INTERLOCK CABLE

BRAKE TRANSMISSION SHIFT INTERLOCK MECHANISM (Continued)

REMOVAL

(1) Lower the steering column.

(2) Disconnect the brake transmission shift interlock (BTSI) cable solenoid electrical connector (Fig. 72).

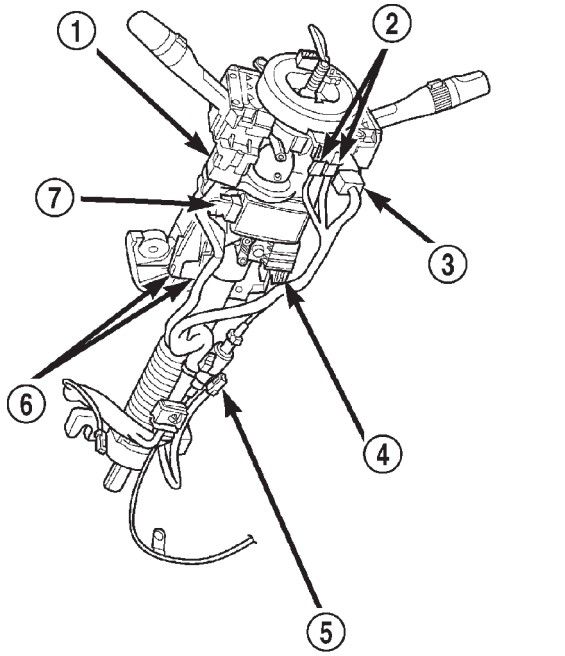

Fig. 72 BTSI Solenoid Connector Location

1 - LEFT MULTIFUNCTION SWITCH CONNECTOR
2 - LOWER CLOCKSPRING CONNECTORS
3 - RIGHT MULTIFUNCTION SWITCH CONNECTOR
4 - SHIFTER INTERLOCK CABLE CONNECTOR
5 - SHIFTER INTERLOCK SOLENOID CONNECTOR
6 - IGNITION SWITCH CONNECTOR RECEPTACLES
7 - SKIM CONNECTOR

(3) With the ignition switch in the “RUN” position depress the BTSI cable locking tab, located on top of the cable connector (Fig. 72) at the steering column and pull the BTSI cable straight out.

(4) Disengage the wire connector at the solenoid on the cable

(5) Remove the transmission shift interlock cable from steering column (Fig. 73).

(6) Remove the floor console and related trim. (Refer to 23 - BODY/INTERIOR/FLOOR CONSOLE - REMOVAL)

(7) Disconnect the BTSI cable from the shift BTSI lever and remove the cable from the shifter assembly bracket.

(8) Release the BTSI cable from any remaining clips.

(9) Remove BTSI cable from the vehicle.

INSTALLATION

NOTE: The gearshift cable must be secured into position and properly adjusted before the installation of the Brake Transmission Interlock Cable (BTSI).

BRAKE TRANSMISSION SHIFT INTERLOCK MECHANISM (Continued)

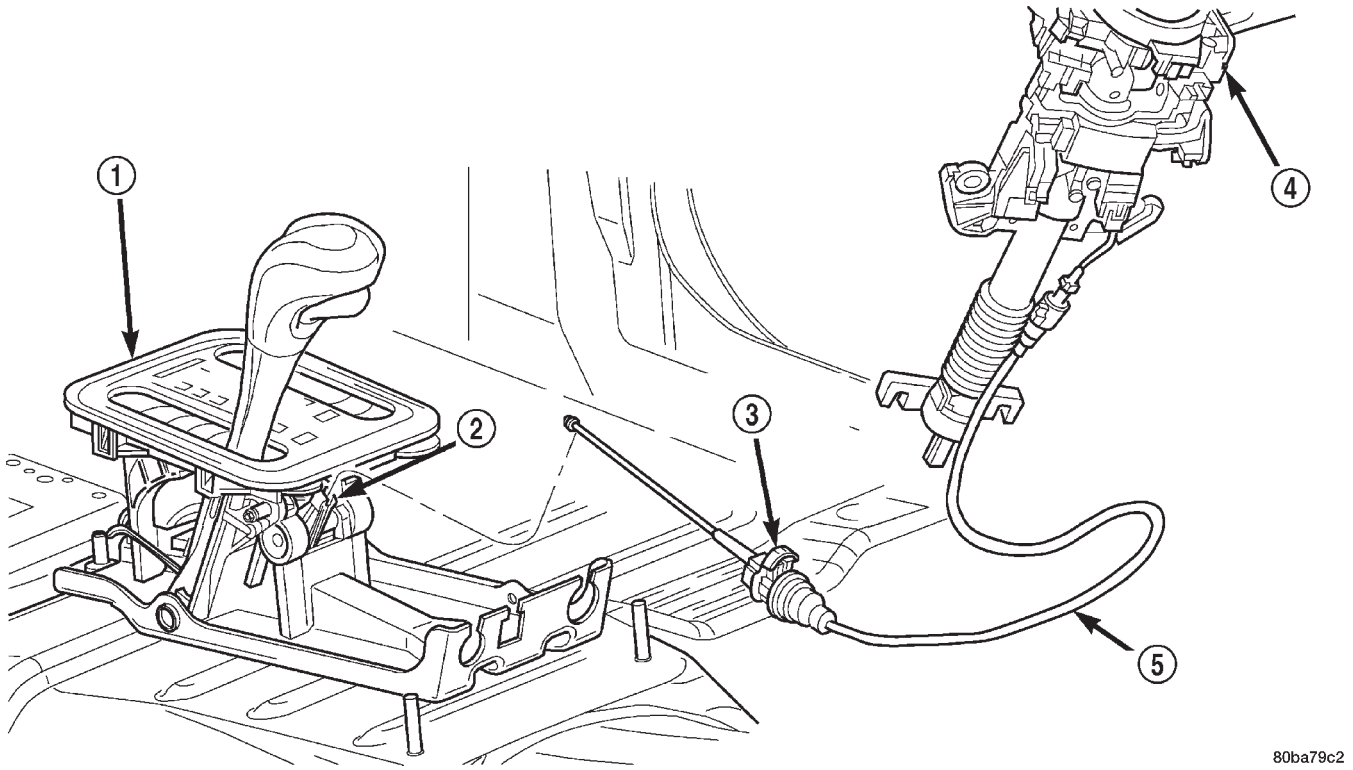

Fig. 73 Brake Transmission Shift Interlock

1 - SHIFT MECHANISM
2 - SHIFTER BTSI LEVER
3 - ADJUSTMENT CLIP
4 - STEERING COLUMN ASSEMBLY
5 - INTERLOCK CABLE

(1) Push the BTSI cable straight into the square mounting hole in the steering column until cable snaps in place (Fig. 74).

(2) Snap BTSI cable solenoid tie strap into hole in steering column tube.

(3) Engage the wiring connector from brake light switch into BTSI cable solenoid housing.

(4) Route BTSI cable to the shifter mechanism.

(5) Install the BTSI cable end fitting into shifter BTSI lever.

(6) Snap BTSI cable adjuster ears into floor shifter bracket and

(7) Place the ignition key cylinder in the LOCK position.

(8) Push the cable adjuster lock clamp downward to lock it.

(9) Test the BTSI cable operation.

(10) Install the floor console and related trim. (Refer to 23 - BODY/INTERIOR/FLOOR CONSOLE - INSTALLATION)

ADJUSTMENTS - BRAKE TRANSMISSION SHIFT INTERLOCK

The park interlock cable is part of the brake/shift lever interlock system. Correct cable adjustment is important to proper interlock operation. The gear shift and park lock cables must both be correctly adjusted in order to shift out of PARK.

ADJUSTMENT PROCEDURE

(1) Remove floor console as necessary for access to the brake transmission shift interlock cable. (Refer to 23 - BODY/INTERIOR/FLOOR CONSOLE - REMOVAL)

(2) Shift the transmission into the PARK position.

(3) Turn ignition switch to LOCK position. **Be sure ignition key cylinder is in the LOCK position. Cable will not adjust correctly in any other position.**

BRAKE TRANSMISSION SHIFT INTERLOCK MECHANISM (Continued)

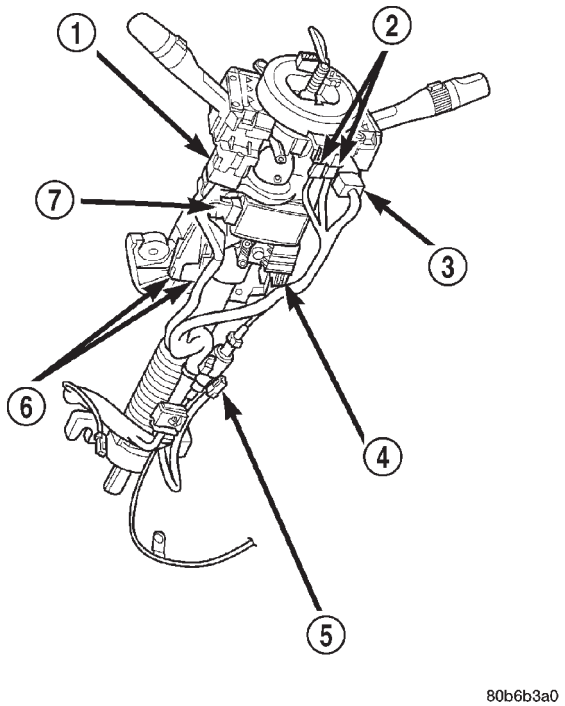

Fig. 74 BTSI Solenoid Connector Location

1 - LEFT MULTIFUNCTION SWITCH CONNECTOR
2 - LOWER CLOCKSPRING CONNECTORS
3 - RIGHT MULTIFUNCTION SWITCH CONNECTOR
4 - SHIFTER INTERLOCK CABLE CONNECTOR
5 - SHIFTER INTERLOCK SOLENOID CONNECTOR
6 - IGNITION SWITCH CONNECTOR RECEPTACLES
7 - SKIM CONNECTOR

(4) Pull cable lock button up to release cable (Fig. 75).

(5) Ensure that the cable is free to self-adjust by pushing cable rearward and releasing.

(6) Push lock button down until it snaps in place.

BTSI FUNCTION CHECK

(1) Verify removal of ignition key allowed in PARK position only.

(2) When the shift lever is in PARK, and the shift handle push-button is in the out position, the ignition key cylinder should rotate freely from off to lock. When the shifter is in any other position, the ignition key should not rotate from off to lock.

(3) Shifting out of PARK should be possible when the ignition key cylinder is in the off position.

(4) Shifting out of PARK should not be possible while applying normal push-button force, and ignition key cylinder is in the run or start positions, unless the foot brake pedal is depressed approximately 1/2 inch (12mm).

(5) Shifting out of PARK should not be possible when the ignition key cylinder is in the accessory or lock position.

(6) Shifting between any gear and NEUTRAL, or PARK, may be done without depressing foot brake with ignition switch in run or start positions.

(7) The floor shifter lever and gate positions should be in alignment with all transmission detent positions.

(8) Engine starts must be possible with shifter lever in PARK or NEUTRAL gate positions only. Engine starts must not be possible in any other gate positions other than PARK or NEUTRAL.

(9) With shifter lever handle push-button not depressed and lever detent in:

- PARK position- apply forward force on center of handle and remove pressure. Engine start must be possible.
- PARK position- apply rearward force on center of handle and remove pressure. Engine start must be possible.
- NEUTRAL position- engine start must be possible.
- NEUTRAL position, engine running and brakes applied- Apply forward force on center of shift handle. Transmission should not be able to shift into REVERSE detent.

ELECTRONIC GOVERNOR

DESCRIPTION

Governor pressure is controlled electronically. Components used for governor pressure control include:

- Governor body
- Valve body transfer plate
- Governor pressure solenoid valve
- Governor pressure sensor
- Fluid temperature thermistor
- Throttle position sensor (TPS)
- Transmission speed sensor
- Powertrain control module (PCM)

ELECTRONIC GOVERNOR (Continued)

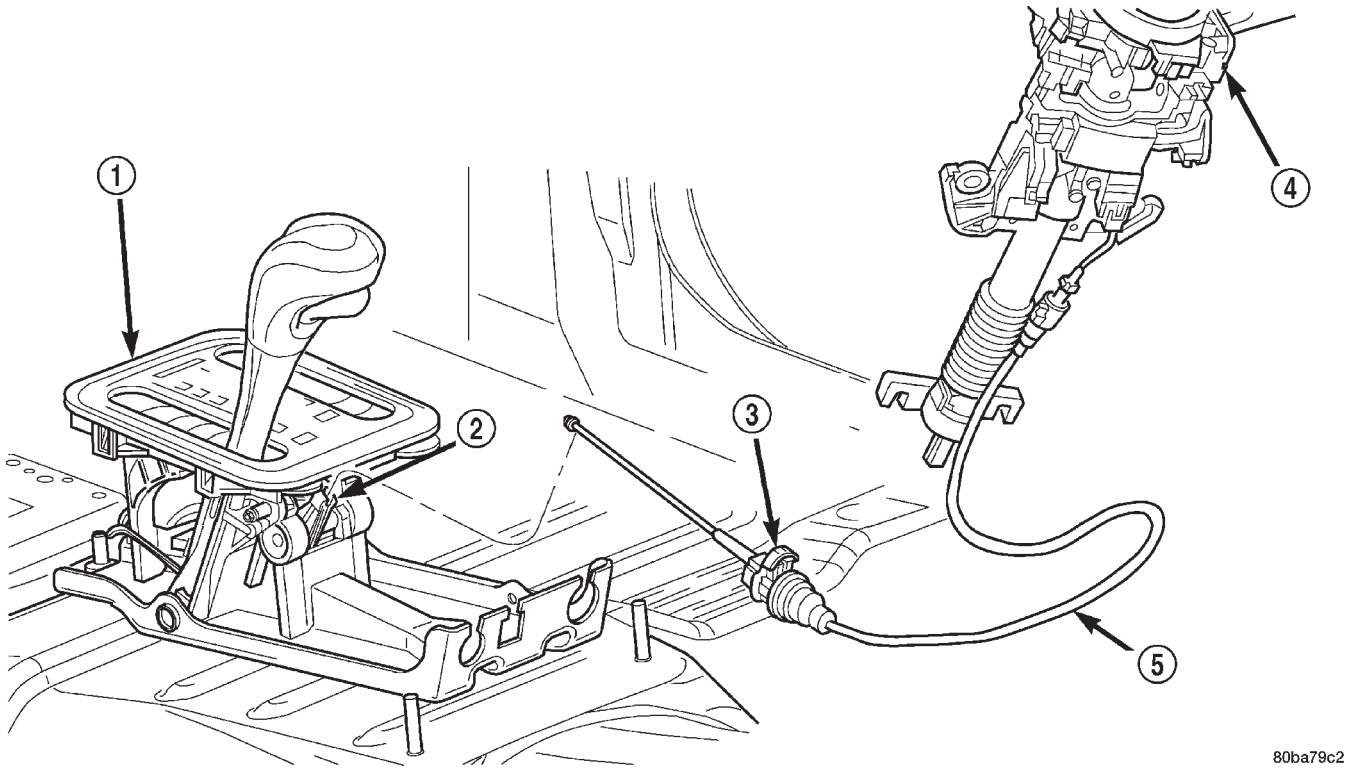

Fig. 75 Brake Transmission Shift Interlock Cable

1 - SHIFT MECHANISM
2 - SHIFTER BTSI LEVER
3 - ADJUSTMENT CLIP
4 - STEERING COLUMN ASSEMBLY
5 - INTERLOCK CABLE

GOVERNOR PRESSURE SOLENOID VALVE

The solenoid valve is a duty-cycle solenoid which regulates the governor pressure needed for upshifts and downshifts. It is an electro-hydraulic device located in the governor body on the valve body transfer plate (Fig. 76).

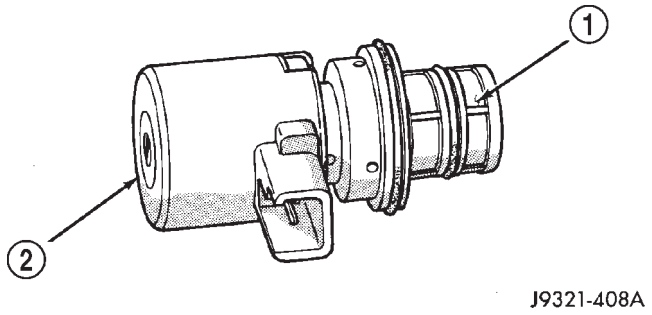

Fig. 76 Governor Pressure Solenoid Valve

1 - SOLENOID FILTER
2 - GOVERNOR PRESSURE SOLENOID

GOVERNOR PRESSURE SENSOR

The governor pressure sensor measures output pressure of the governor pressure solenoid valve (Fig. 77).

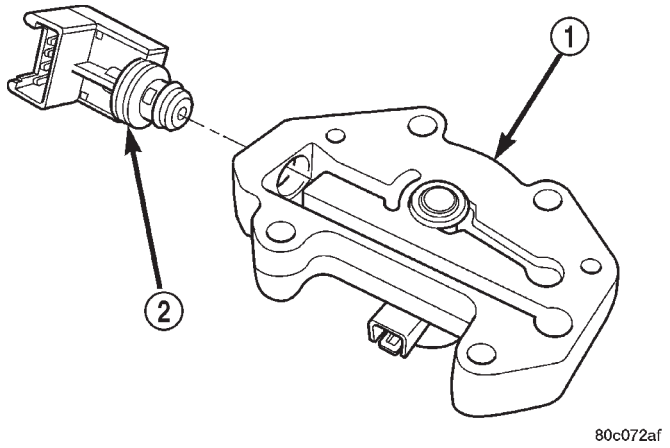

Fig. 77 Governor Pressure Sensor

1 - GOVERNOR BODY
2 - GOVERNOR PRESSURE SENSOR/TRANSMISSION FLUID TEMPERATURE THERMISTOR

GOVERNOR BODY AND TRANSFER PLATE

The transfer plate is designed to supply transmission line pressure to the governor pressure solenoid valve and to return governor pressure.

The governor pressure solenoid valve is mounted in the governor body. The body is bolted to the lower side of the transfer plate (Fig. 77).

ELECTRONIC GOVERNOR (Continued)

GOVERNOR PRESSURE CURVES

There are four governor pressure curves programmed into the transmission control module. The different curves allow the control module to adjust governor pressure for varying conditions. One curve is used for operation when fluid temperature is at, or below, –1°C (30°F). A second curve is used when fluid temperature is at, or above, 10°C (50°F) during normal city or highway driving. A third curve is used during wide-open throttle operation. The fourth curve is used when driving with the transfer case in low range.

OPERATION

Compensation is required for performance variations of two of the input devices. Though the slope of the transfer functions is tightly controlled, offset may vary due to various environmental factors or manufacturing tolerances.

The pressure transducer is affected by barometric pressure as well as temperature. Calibration of the zero pressure offset is required to compensate for shifting output due to these factors.

Normal calibration will be performed when sump temperature is above 50 degrees F, or in the absence of sump temperature data, after the first 10 minutes of vehicle operation. Calibration of the pressure transducer offset occurs each time the output shaft speed falls below 200 RPM. Calibration shall be repeated each 3 seconds the output shaft speed is below 200 RPM. A 0.5 second pulse of 95% duty cycle is applied to the governor pressure solenoid valve and the transducer output is read during this pulse. Averaging of the transducer signal is necessary to reject electrical noise.

Under cold conditions (below 50 degrees F sump), the governor pressure solenoid valve response may be too slow to guarantee 0 psi during the 0.5 second calibration pulse. Calibration pulses are continued during this period, however the transducer output valves are discarded. Transducer offset must be read at key-on, under conditions which promote a stable reading. This value is retained and becomes the offset during the ″cold″ period of operation.

GOVERNOR PRESSURE SOLENOID VALVE

The inlet side of the solenoid valve is exposed to normal transmission line pressure. The outlet side of the valve leads to the valve body governor circuit.

The solenoid valve regulates line pressure to produce governor pressure. The average current supplied to the solenoid controls governor pressure. One amp current produces zero kPa/psi governor pressure. Zero amps sets the maximum governor pressure.

The powertrain control module (PCM) turns on the trans control relay which supplies electrical power to the solenoid valve. Operating voltage is 12 volts (DC). The PCM controls the ground side of the solenoid using the governor pressure solenoid control circuit.

GOVERNOR PRESSURE SENSOR

The sensor output signal provides the necessary feedback to the PCM. This feedback is needed to adequately control governor pressure.

GOVERNOR BODY AND TRANSFER PLATE

The transfer plate channels line pressure to the solenoid valve through the governor body. It also channels governor pressure from the solenoid valve to the governor circuit. It is the solenoid valve that develops the necessary governor pressure.

GOVERNOR PRESSURE CURVES

LOW TRANSMISSION FLUID TEMPERATURE

When the transmission fluid is cold the conventional governor can delay shifts, resulting in higher than normal shift speeds and harsh shifts. The electronically controlled low temperature governor pressure curve is higher than normal to make the transmission shift at normal speeds and sooner. The PCM uses a temperature sensor in the transmission oil sump to determine when low temperature governor pressure is needed.

NORMAL OPERATION

Normal operation is refined through the increased computing power of the PCM and through access to data on engine operating conditions provided by the PCM that were not available with the previous stand-alone electronic module. This facilitated the development of a load adaptive shift strategy - the ability to alter the shift schedule in response to vehicle load condition. One manifestation of this capability is grade ″hunting″ prevention - the ability of the transmission logic to delay an upshift on a grade if the engine does not have sufficient power to maintain speed in the higher gear. The 3-2 downshift and the potential for hunting between gears occurs with a heavily loaded vehicle or on steep grades. When hunting occurs, it is very objectionable because shifts are frequent and accompanied by large changes in noise and acceleration.

WIDE OPEN THROTTLE OPERATION

In wide-open throttle (WOT) mode, adaptive memory in the PCM assures that up-shifts occur at the preprogrammed optimum speed. WOT operation is determined from the throttle position sensor, which is also a part of the emission control system. The ini-

ELECTRONIC GOVERNOR (Continued)

tial setting for the WOT upshift is below the optimum engine speed. As WOT shifts are repeated, the PCM learns the time required to complete the shifts by comparing the engine speed when the shifts occur to the optimum speed. After each shift, the PCM adjusts the shift point until the optimum speed is reached. The PCM also considers vehicle loading, grade and engine performance changes due to high altitude in determining when to make WOT shifts. It does this by measuring vehicle and engine acceleration and then factoring in the shift time.

TRANSFER CASE LOW RANGE OPERATION

On four-wheel drive vehicles operating in low range, the engine can accelerate to its peak more rapidly than in Normal range, resulting in delayed shifts and undesirable engine ″flare.″ The low range governor pressure curve is also higher than normal to initiate upshifts sooner. The PCM compares electronic vehicle speed signal used by the speedometer to the transmission output shaft speed signal to determine when the transfer case is in low range.

REMOVAL

(1) Hoist and support vehicle on safety stands.
(2) Remove transmission fluid pan and filter.
(3) Disengage wire connectors from pressure sensor and solenoid (Fig. 78).

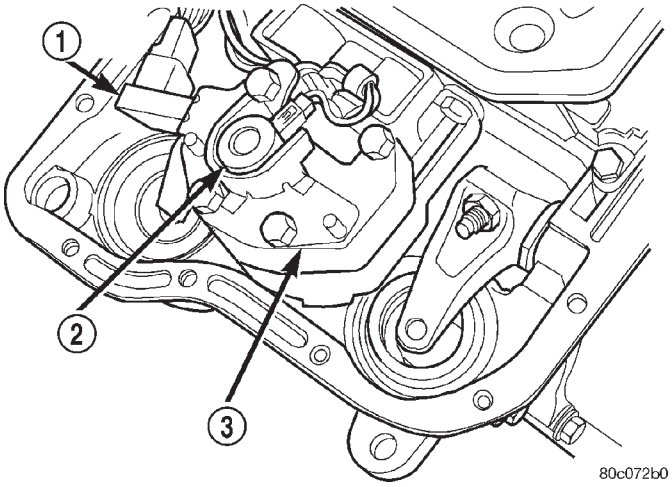

Fig. 78 Governor Solenoid And Pressure Sensor

1 - PRESSURE SENSOR
2 - PRESSURE SOLENOID
3 - GOVERNOR

(4) Remove screws holding pressure solenoid retainer to governor body.

(5) Separate solenoid retainer from governor (Fig. 79).

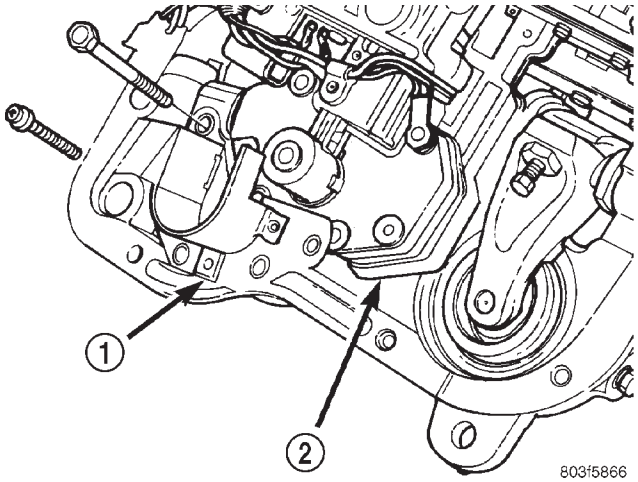

Fig. 79 Pressure Solenoid Retainer

1 - PRESSURE SOLENOID RETAINER
2 - GOVERNOR

(6) Pull solenoid from governor body (Fig. 80).
(7) Pull pressure sensor from governor body.
(8) Remove bolts holding governor body to valve body.

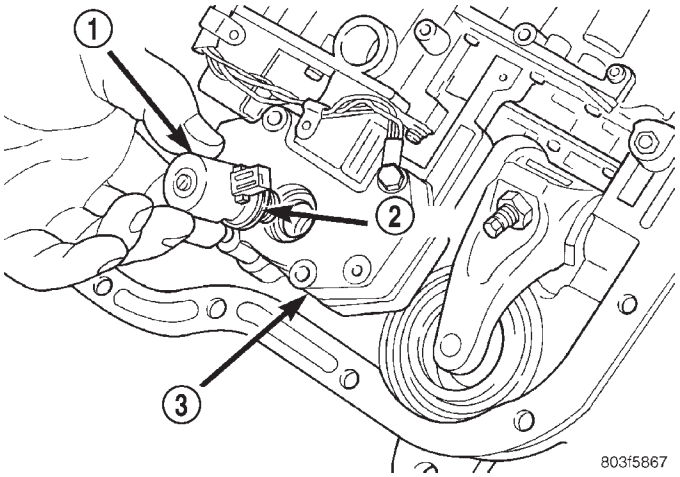

Fig. 80 Pressure Solenoid and O-ring

1 - PRESSURE SOLENOID
2 - O-RING
3 - GOVERNOR

(9) Separate governor body from valve body (Fig. 81).
(10) Remove governor body gasket.

ELECTRONIC GOVERNOR (Continued)

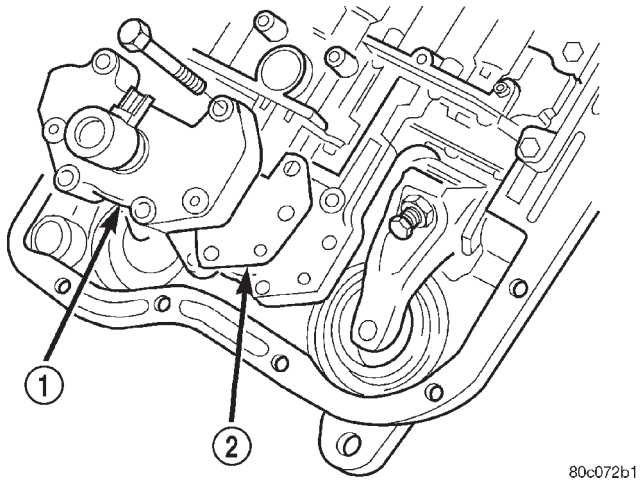

Fig. 81 Governor Body and Gasket

1 - GOVERNOR BODY
2 - GASKET

INSTALLATION

Before installing the pressure sensor and solenoid in the governor body, replace O-ring seals, clean the gasket surfaces and replace gasket.

(1) Place gasket in position on back of governor body (Fig. 82).

(2) Place governor body in position on valve body.

(3) Install bolts to hold governor body to valve body.

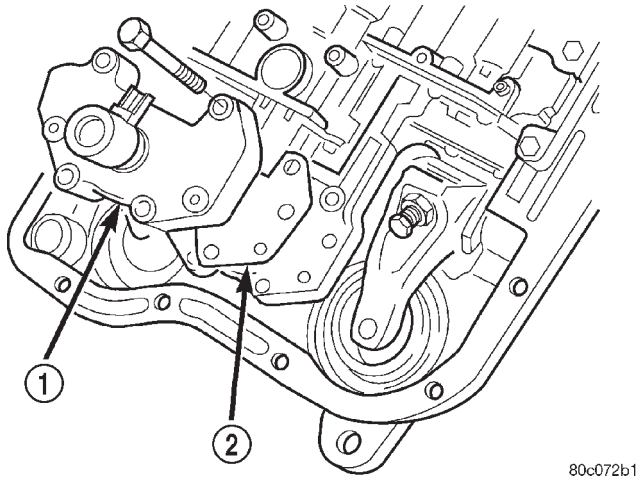

Fig. 82 Governor Body and Gasket

1 - GOVERNOR BODY
2 - GASKET

(4) Lubricate O-ring on pressure sensor with transmission fluid.

(5) Align pressure sensor to bore in governor body.

(6) Push pressure sensor into governor body.

(7) Lubricate O-ring, on pressure solenoid, with transmission fluid.

(8) Align pressure solenoid to bore in governor body (Fig. 83).

(9) Push solenoid into governor body.

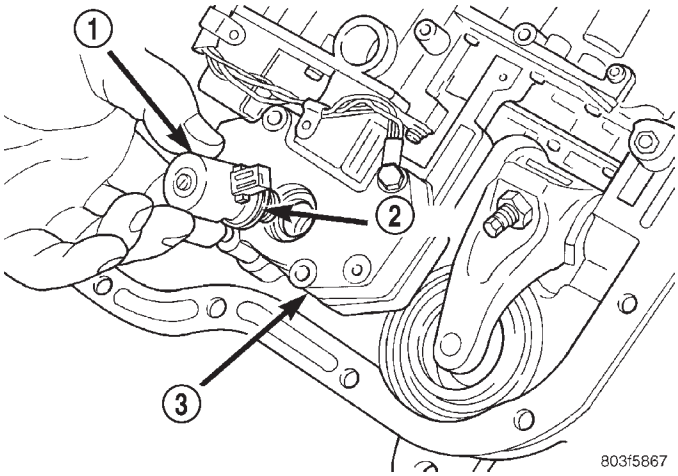

Fig. 83 Pressure Solenoid and O-ring

1 - PRESSURE SOLENOID
2 - O-RING
3 - GOVERNOR

(10) Place solenoid retainer in position on governor (Fig. 84).

(11) Install screws to hold pressure solenoid retainer to governor body.

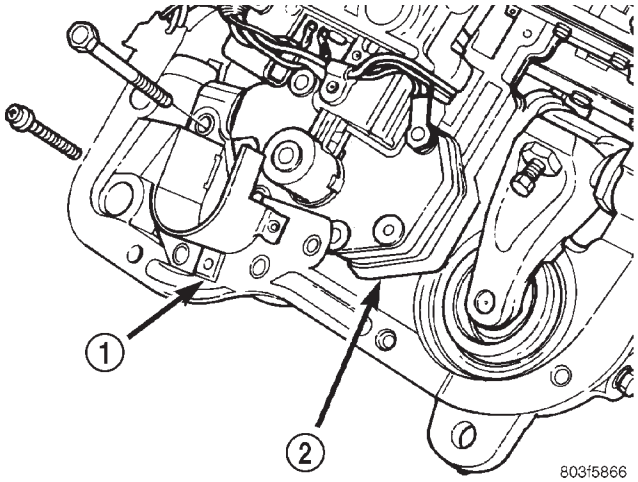

Fig. 84 Pressure Solenoid Retainer

1 - PRESSURE SOLENOID RETAINER
2 - GOVERNOR

ELECTRONIC GOVERNOR (Continued)

(12) Engage wire connectors into pressure sensor and solenoid (Fig. 85).

(13) Install transmission fluid pan and (new) filter.

(14) Lower vehicle and road test to verify repair.

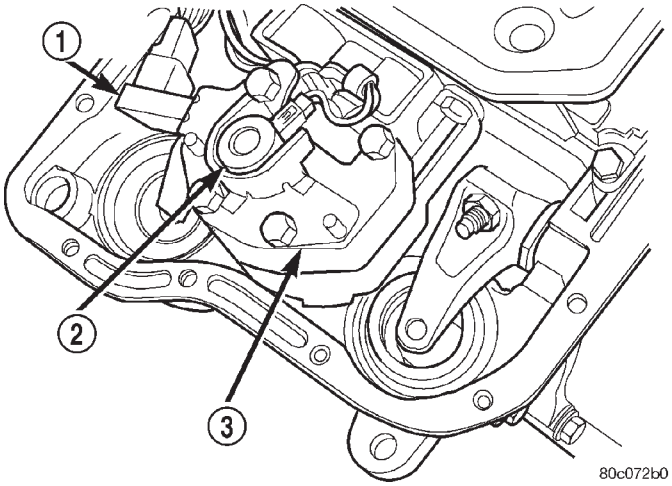

Fig. 85 Governor Solenoid And Pressure Sensor

1 - PRESSURE SENSOR
2 - PRESSURE SOLENOID
3 - GOVERNOR

EXTENSION HOUSING BUSHING

REMOVAL

(1) Remove extension housing yoke seal.

(2) Insert Remover 6957 into the extension housing. Tighten tool to bushing and remove bushing (Fig. 86).

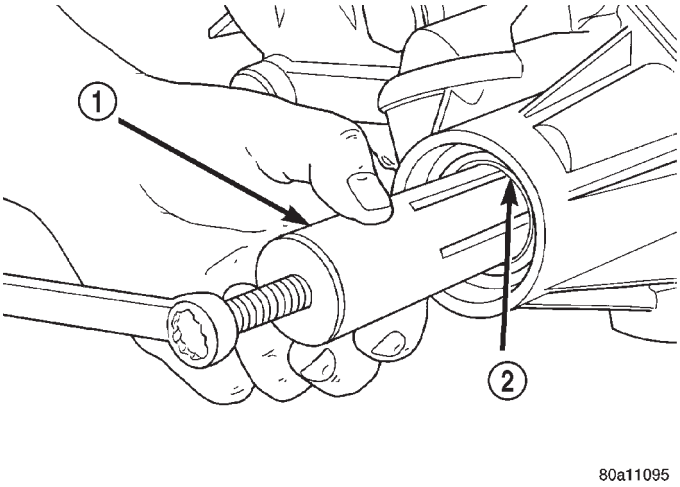

Fig. 86 Bushing Removal-Typical

1 - REMOVER 6957
2 - EXTENSION HOUSING BUSHING

INSTALLATION

(1) Align bushing oil hole with oil slot in extension housing.

(2) Tap bushing into place with Installer 6951 and Handle C-4171.

(3) Install new oil seal in housing using Seal Installer C-3995-A (Fig. 87).

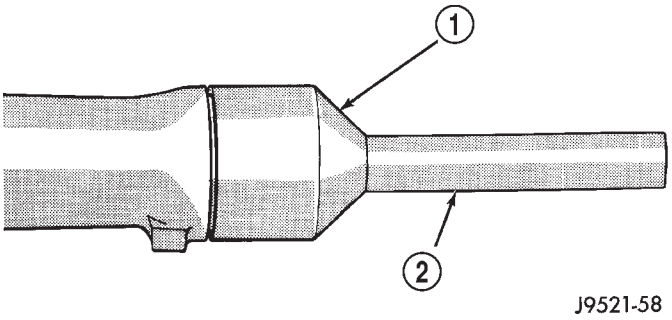

Fig. 87 Extension Housing Seal Installation

1 - SPECIAL TOOL C-3995-A OR C-3972-A
2 - SPECIAL TOOL C-4471

EXTENSION HOUSING SEAL

REMOVAL

(1) Raise vehicle.

(2) Mark propeller shaft and axle yoke for alignment reference.

(3) Disconnect and remove propeller shaft.

(4) Remove old seal with Seal Remover C-3985-B (Fig. 88) from overdrive housing.

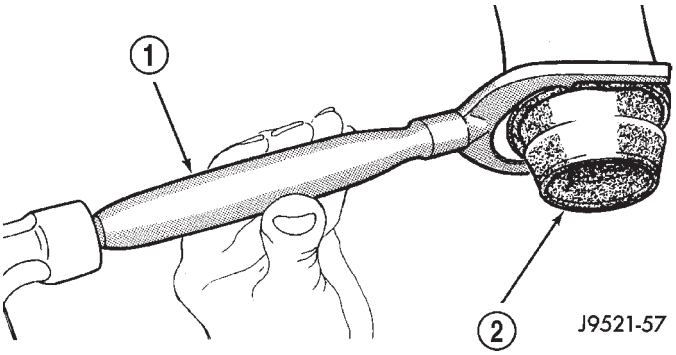

Fig. 88 Removing Overdrive Housing Yoke Seal

1 - SPECIAL TOOL C-3985-B
2 - SEAL

INSTALLATION

(1) Place seal in position on overdrive housing.

(2) Drive seal into overdrive housing with Seal Installer C-3995-A (Fig. 89).

EXTENSION HOUSING SEAL (Continued)

(3) Carefully guide propeller shaft slip yoke into housing and onto output shaft splines. Align marks made at removal and connect propeller shaft to rear axle pinion yoke.

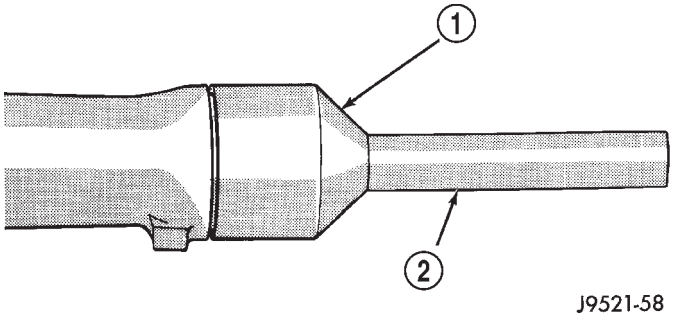

Fig. 89 Installing Overdrive Housing Seal

1 - SPECIAL TOOL C-3995-A OR C-3972-A
2 - SPECIAL TOOL C-4471

FLUID AND FILTER

DIAGNOSIS AND TESTING - EFFECTS OF INCORRECT FLUID LEVEL

A low fluid level allows the pump to take in air along with the fluid. Air in the fluid will cause fluid pressures to be low and develop slower than normal. If the transmission is overfilled, the gears churn the fluid into foam. This aerates the fluid and causing the same conditions occurring with a low level. In either case, air bubbles cause fluid overheating, oxidation and varnish buildup which interferes with valve, clutch and servo operation. Foaming also causes fluid expansion which can result in fluid overflow from the transmission vent or fill tube. Fluid overflow can easily be mistaken for a leak if inspection is not careful.

DIAGNOSIS AND TESTING - CAUSES OF BURNT FLUID

Burnt, discolored fluid is a result of overheating which has two primary causes.

(1) A result of restricted fluid flow through the main and/or auxiliary cooler. This condition is usually the result of a faulty or improperly installed drainback valve, a damaged main cooler, or severe restrictions in the coolers and lines caused by debris or kinked lines.

(2) Heavy duty operation with a vehicle not properly equipped for this type of operation. Trailer towing or similar high load operation will overheat the transmission fluid if the vehicle is improperly equipped. Such vehicles should have an auxiliary transmission fluid cooler, a heavy duty cooling system, and the engine/axle ratio combination needed to handle heavy loads.

DIAGNOSIS AND TESTING - FLUID CONTAMINATION

Transmission fluid contamination is generally a result of:

- adding incorrect fluid
- failure to clean dipstick and fill tube when checking level
- engine coolant entering the fluid
- internal failure that generates debris
- overheat that generates sludge (fluid breakdown)
- failure to reverse flush cooler and lines after repair
- failure to replace contaminated converter after repair

The use of non-recommended fluids can result in transmission failure. The usual results are erratic shifts, slippage, abnormal wear and eventual failure due to fluid breakdown and sludge formation. Avoid this condition by using recommended fluids only.

The dipstick cap and fill tube should be wiped clean before checking fluid level. Dirt, grease and other foreign material on the cap and tube could fall into the tube if not removed beforehand. Take the time to wipe the cap and tube clean before withdrawing the dipstick.

Engine coolant in the transmission fluid is generally caused by a cooler malfunction. The only remedy is to replace the radiator as the cooler in the radiator is not a serviceable part. If coolant has circulated through the transmission for some time, an overhaul may also be necessary; especially if shift problems have developed.

The transmission cooler and lines should be reverse flushed whenever a malfunction generates sludge and/or debris. The torque converter should also be replaced at the same time.

Failure to flush the cooler and lines will result in recontamination. Flushing applies to auxiliary coolers as well. The torque converter should also be replaced whenever a failure generates sludge and debris. This is necessary because normal converter flushing procedures will not remove all contaminants.

STANDARD PROCEDURE - FLUID LEVEL CHECK

Low fluid level can cause a variety of conditions because it allows the pump to take in air along with the fluid. As in any hydraulic system, air bubbles make the fluid spongy, therefore, pressures will be low and build up slowly.

Improper filling can also raise the fluid level too high. When the transmssion has too much fluid, the geartrain churns up foam and cause the same conditions which occur with a low fluid level.

FLUID AND FILTER (Continued)

In either case, air bubbles can cause overheating and/or fluid oxidation, and varnishing. This can interfere with normal valve, clutch, and accumulator operation. Foaming can also result in fluid escaping from the transmission vent where it may be mistaken for a leak.

Along with fluid level, it is important to check the condition of the fluid. When the fluid smells burned, and is contaminated with metal or friction material particles, a complete transmission recondition is needed. Be sure to examine the fluid on the dipstick closely. If there is any doubt about its condition, drain out a sample for a double check.

After the fluid has been checked, seat the dipstick fully to seal out water and dirt.

The transmission has a dipstick to check oil level. It is located on the right side of the engine. Be sure to wipe all dirt from dipstick handle before removing.

Fluid level is checked with the engine running at curb idle speed, the transmission in NEUTRAL and the transmission fluid at normal operating temperature. **The engine should be running at idle speed for at least one minute, with the vehicle on level ground.**

The transmission fluid level can be checked two ways.

PROCEDURE ONE

(1) Transmission fluid must be at normal operating temperature for accurate fluid level check. Drive vehicle if necessary to bring fluid temperature up to normal hot operating temperature of 82°C (180°F).

(2) Position vehicle on level surface.

(3) Start and run engine at curb idle speed.

(4) Apply parking brakes.

(5) Shift transmission momentarily into all gear ranges. Then shift transmission back to NEUTRAL.

(6) Clean top of filler tube and dipstick to keep dirt from entering tube.

(7) Remove dipstick (Fig. 90) and check fluid level as follows:

(a) Correct acceptable level is in crosshatch area.

(b) Correct maximum level is to MAX arrow mark.

(c) Incorrect level is at or below MIN line.

(d) If fluid is low, add only enough Mopar® ATF +4, type 9602, to restore correct level. Do not overfill.

PROCEDURE TWO

(1) Start engine and apply parking brake.

(2) Shift the transmission into DRIVE for approximately 2 seconds.

(3) Shift the transmission into REVERSE for approximately 2 seconds.

(4) Shift the transmission into PARK.

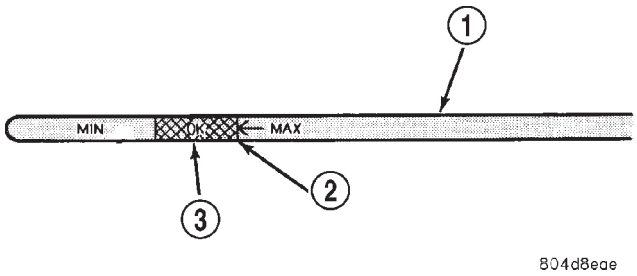

Fig. 90 Dipstick Fluid Level Marks - Typical

1 - DIPSTICK
2 - MAXIMUM CORRECT FLUID LEVEL
3 - ACCEPTABLE FLUID LEVEL

(5) Hook up DRB® scan tool and select engine.

(6) Select sensors.

(7) Read the transmission temperature value.

(8) Compare the fluid temperature value with the figure. (Fig. 91)

(9) Adjust transmission fluid level shown on the dipstick according to the figure.

NOTE: After adding any fluid to the transmission, wait a minimum of 2 minutes for the oil to fully drain from the fill tube into the transmission before rechecking the fluid level.

(10) Check transmission for leaks.

STANDARD PROCEDURE - FLUID AND FILTER REPLACEMENT

For proper service intervals (Refer to LUBRICATION & MAINTENANCE/MAINTENANCE SCHEDULES - DESCRIPTION). The service fluid fill after a filter change is approximately 3.8 liters (4.0 quarts).

(1) Hoist and support vehicle on safety stands.

(2) Place a large diameter shallow drain pan beneath the transmission pan.

(3) Remove bolts holding front and sides of pan to transmission (Fig. 92).

(4) Loosen bolts holding rear of pan to transmission.

(5) Slowly separate front of pan away from transmission allowing the fluid to drain into drain pan.

(6) Hold up pan and remove remaining bolt holding pan to transmission.

(7) While holding pan level, lower pan away from transmission.

(8) Pour remaining fluid in pan into drain pan.

(9) Remove screws holding filter to valve body (Fig. 93).

(10) Separate filter from valve body and pour fluid in filter into drain pan.

(11) Dispose of used trans fluid and filter properly.

FLUID AND FILTER (Continued)

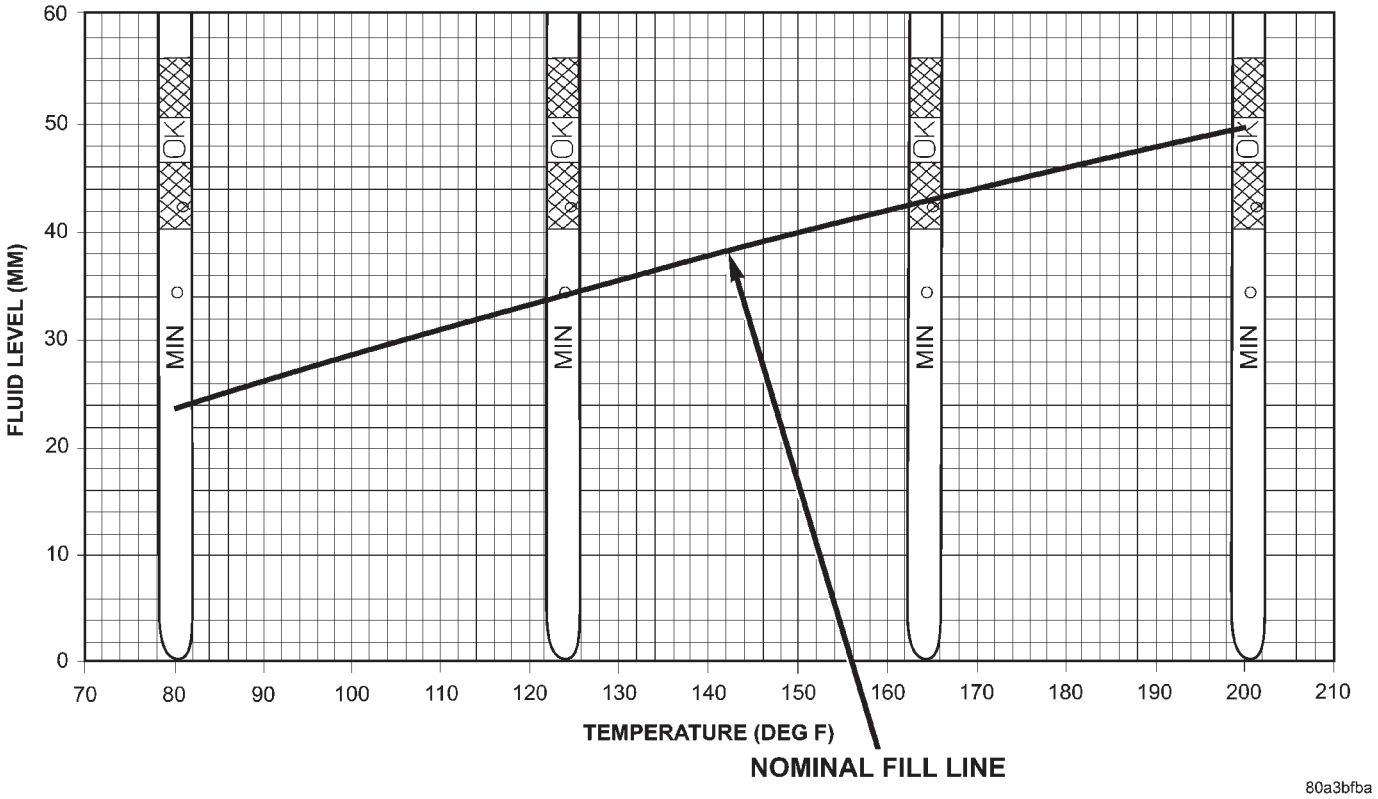

Fig. 91 42/44RE Fluid Fill Graph

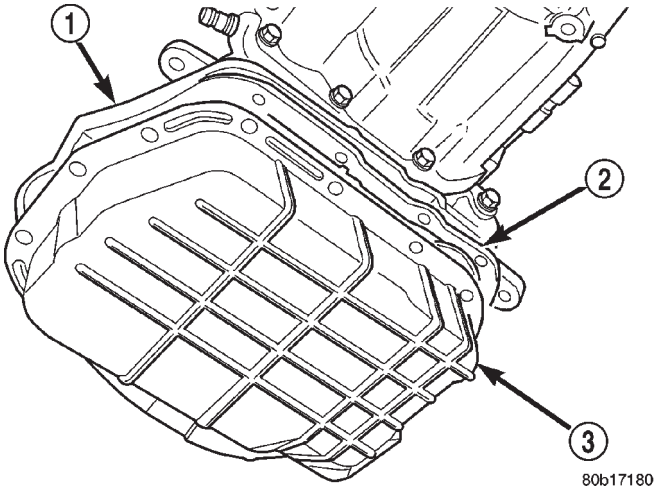

Fig. 92 Transmission Pan

1 - TRANSMISSION
2 - GASKET
3 - PAN

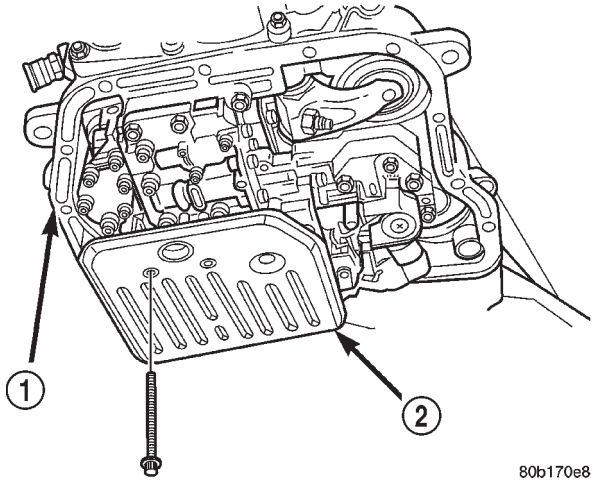

Fig. 93 Transmission Filter

1 - TRANSMISSION
2 - FILTER

FLUID AND FILTER (Continued)

STANDARD PROCEDURES - TRANSMISSION FILL

To avoid overfilling transmission after a fluid change or overhaul, perform the following procedure:

(1) Remove dipstick and insert clean funnel in transmission fill tube.

(2) Add following initial quantity of Mopar® ATF +4, type 9602, to transmission:

(a) If only fluid and filter were changed, add **3 pints (1-1/2 quarts)** of ATF +4 to transmission.

(b) If transmission was completely overhauled, torque converter was replaced or drained, and cooler was flushed, add **12 pints (6 quarts)** of ATF +4 to transmission.

(3) Apply parking brakes.

(4) Start and run engine at normal curb idle speed.

(5) Apply service brakes, shift transmission through all gear ranges then back to NEUTRAL, set parking brake, and leave engine running at curb idle speed.

(6) Remove funnel, insert dipstick and check fluid level. If level is low, **add fluid to bring level to MIN mark on dipstick.** Check to see if the oil level is equal on both sides of the dipstick. If one side is noticably higher than the other, the dipstick has picked up some oil from the dipstick tube. Allow the oil to drain down the dipstick tube and re-check.

(7) Drive vehicle until transmission fluid is at normal operating temperature.

(8) With the engine running at curb idle speed, the gear selector in NEUTRAL, and the parking brake applied, check the transmission fluid level.

CAUTION: Do not overfill transmission, fluid foaming and shifting problems can result.

(9) Add fluid to bring level up to MAX arrow mark.

When fluid level is correct, shut engine off, release park brake, remove funnel, and install dipstick in fill tube.

FRONT CLUTCH

DESCRIPTION

The front clutch assembly (Fig. 94) is composed of the front clutch retainer, pressure plate, clutch plates, driving discs, piston, piston return spring, return spring retainer, and snap-rings. The front clutch is the forward-most component in the transmission geartrain and is directly behind the oil pump and is considered a driving component.

NOTE: The number of discs and plates may vary with each engine and vehicle combination.

OPERATION

To apply the clutch, pressure is applied between the clutch retainer and piston. The fluid pressure is provided by the oil pump, transferred through the control valves and passageways, and enters the clutch through the hub of the reaction shaft support. With pressure applied between the clutch retainer and piston, the piston moves away from the clutch retainer and compresses the clutch pack. This action applies the clutch pack, allowing torque to flow through the input shaft into the driving discs, and into the clutch plates and pressure plate that are lugged to the clutch retainer. The waved snap-ring is used to cushion the application of the clutch pack. In some transmissions, the snap-ring is selective and used to adjust clutch pack clearance.

When pressure is released from the piston, the spring returns the piston to its fully released position and disengages the clutch. The release spring also helps to cushion the application of the clutch assembly. When the clutch is in the process of being released by the release spring, fluid flows through a vent and one-way ball-check-valve located in the clutch retainer. The check-valve is needed to eliminate the possibility of plate drag caused by centrifugal force acting on the residual fluid trapped in the clutch piston retainer.

FRONT CLUTCH (Continued)

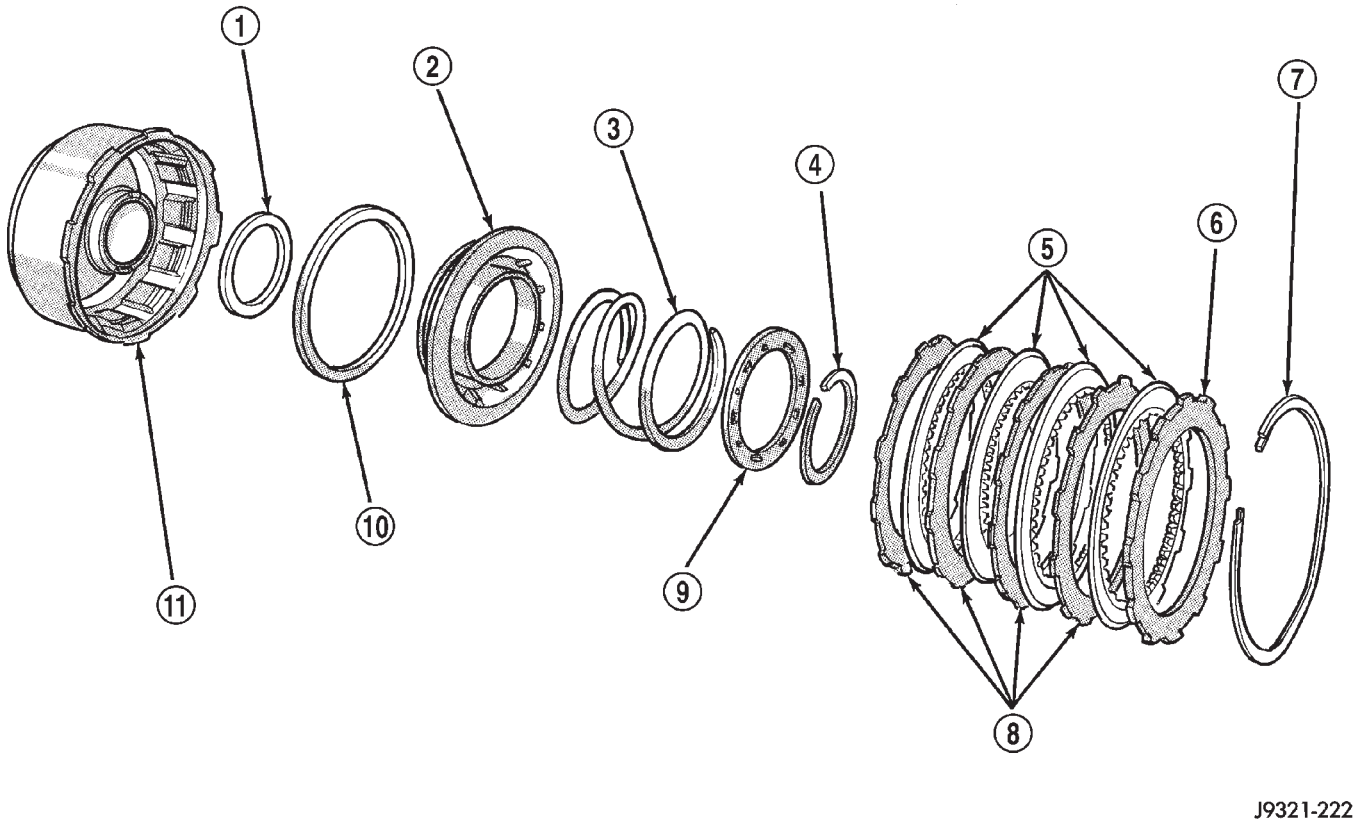

Fig. 94 Front Clutch Components

1 - RETAINER HUB SEAL
2 - CLUTCH PISTON
3 - PISTON SPRING
4 - SPRING RETAINER SNAP-RING
5 - CLUTCH DISCS
6 - PRESSURE PLATE
7 - SNAP-RING (WAVED)
8 - CLUTCH PLATES
9 - SPRING RETAINER
10 - PISTON SEAL
11 - FRONT CLUTCH RETAINER

FRONT CLUTCH (Continued)

DISASSEMBLY

(1) Remove waved snap-ring and remove pressure plate, clutch plates and clutch discs (Fig. 95).

(2) Compress clutch piston spring with Compressor Tool C-3575-A (Fig. 96). Be sure legs of tool are seated squarely on spring retainer before compressing spring.

(3) Remove retainer snap-ring and remove compressor tool.

(4) Remove spring retainer and clutch spring. Note position of retainer on spring for assembly reference.

(5) Remove clutch piston from clutch retainer. Remove piston by rotating it up and out of retainer.

(6) Remove seals from clutch retainer piston bore and clutch retainer hub. Discard both seals as they are not reusable.

INSPECTION

Inspect the front clutch components. Replace the clutch discs if warped, worn, scored, burned or charred, or if the facing is flaking off. Replace the steel plates if heavily scored, warped, or broken. Be sure the driving lugs on the plates are in good condition. The lugs must not be bent, cracked or damaged in any way.

Replace the clutch spring and spring retainer if either is distorted, warped or broken.

Check the lug grooves in the clutch retainer. The steel plates should slide freely in the slots. Replace the retainer if the grooves are worn or damaged.

Check action of the check ball in the retainer (Fig. 97). The ball must move freely and not stick.

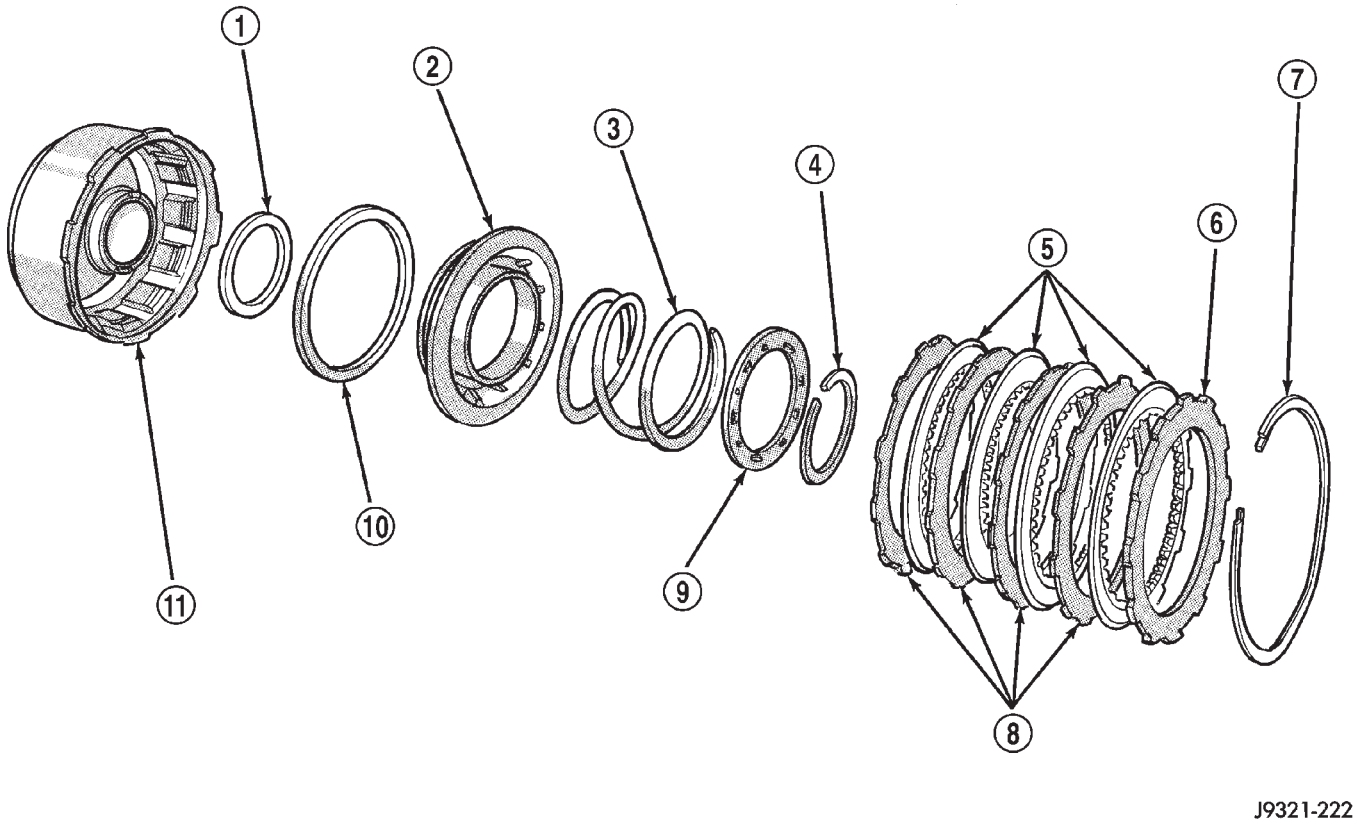

Fig. 95 42RE Front Clutch Components

1 - RETAINER HUB SEAL
2 - CLUTCH PISTON
3 - PISTON SPRING
4 - SPRING RETAINER SNAP-RING
5 - CLUTCH DISCS
6 - PRESSURE PLATE
7 - SNAP-RING (WAVED)
8 - CLUTCH PLATES
9 - SPRING RETAINER
10 - PISTON SEAL
11 - FRONT CLUTCH RETAINER

FRONT CLUTCH (Continued)

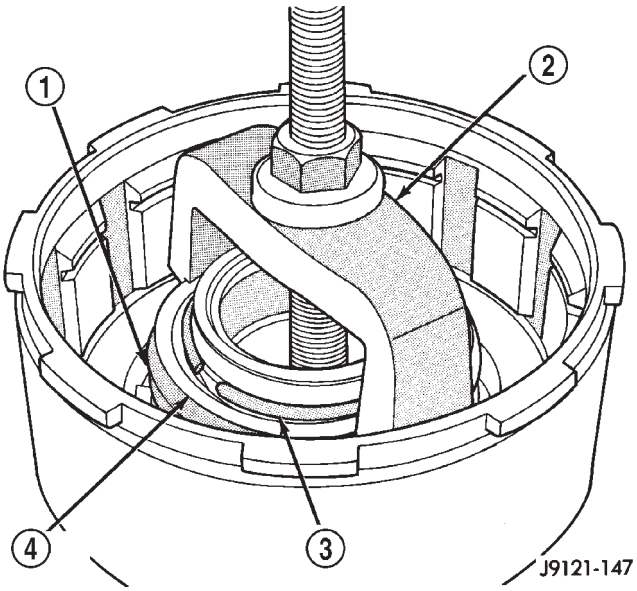

Fig. 96 Compressing Front Clutch Piston Spring

1 - FRONT CLUTCH SPRING
2 - COMPRESSOR TOOL C-3575-A
3 - RETAINER SNAP-RING
4 - SPRING RETAINER

NOTE: Inspect the clutch retainer bushings carefully (Fig. 98). The retainer bushings are NOT serviceable. It will be necessary to replace the retainer if either bushing is scored, or worn.

Inspect the piston and retainer seal surfaces for nicks or scratches. Minor scratches can be removed with crocus cloth. However, replace the piston and/or retainer if the seal surfaces are seriously scored.

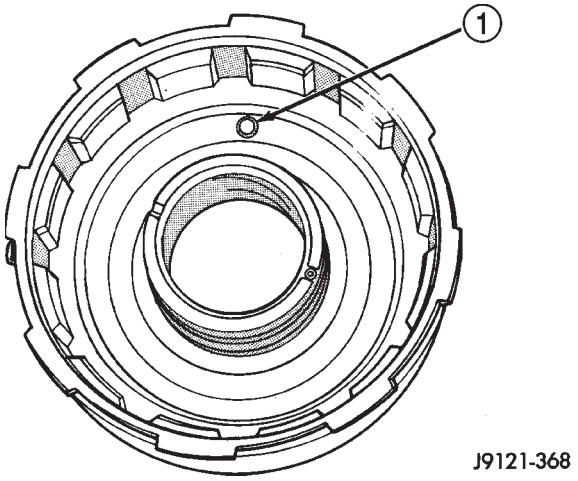

Fig. 97 Front Clutch Piston Retainer Check Ball Location

1 - RETAINER CHECK BALL

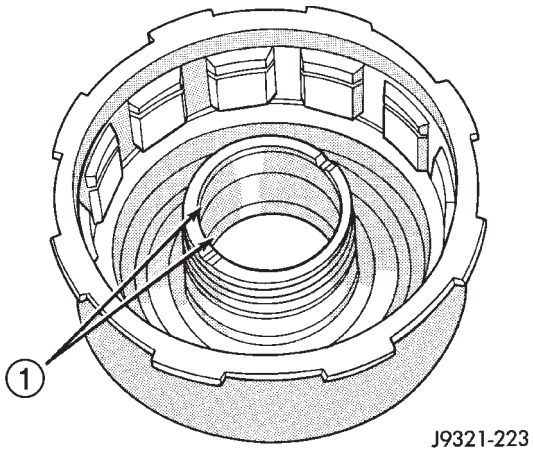

Fig. 98 Retainer Bushing Location/Inspection

1 - FRONT CLUTCH RETAINER BUSHINGS (NON-SERVICEABLE)

ASSEMBLY

NOTE: The 42RE transmission uses four plates and discs for the front clutch.

(1) Soak clutch discs in transmission fluid while assembling other clutch parts.

(2) Install new seals in the clutch retainer lower groove and on outer diameter of the retainer hub. Be sure lip of each seal faces interior of clutch retainer.

(3) Lubricate lips of the retainer seals with liberal quantity of Mopar® Door Ease. Then lubricate retainer hub, bore and piston with light coat of transmission fluid.

(4) Install clutch piston in retainer (Fig. 99). Use twisting motion to seat piston in bottom of retainer.

CAUTION: Never push the clutch piston straight in. This will fold the seals over causing leakage and clutch slip.

(5) Position spring in clutch piston (Fig. 100).

(6) Position spring retainer on top of piston spring (Fig. 101). Make sure retainer is properly installed. Small raised tabs should be facing upward. Semicircular lugs on underside of retainer are for positioning retainer in spring.

(7) Compress piston spring and retainer with Compressor Tool C-3575-A (Fig. 96). Then install new snap-ring to secure spring retainer and spring.

(8) Install clutch plates and discs (Fig. 95). Install steel plate then disc until all plates and discs are installed. The front clutch uses 4 clutch discs and plates in a 42RE transmission.

(9) Install pressure plate and waved snap-ring (Fig. 95).

FRONT CLUTCH (Continued)

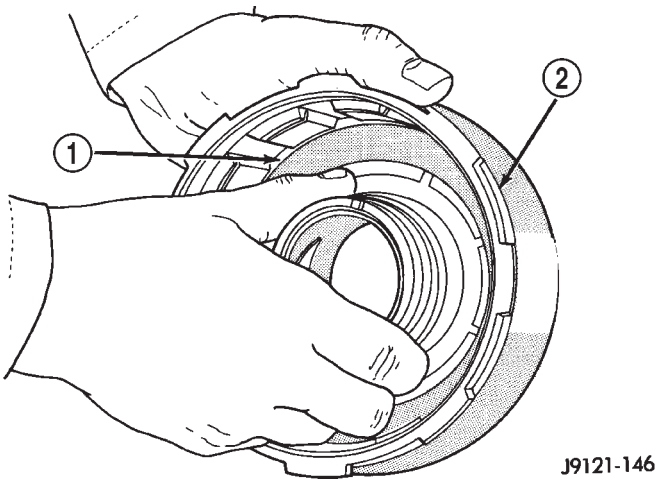

Fig. 99 Front Clutch Piston Installation

1 - CLUTCH PISTON
2 - FRONT CLUTCH RETAINER

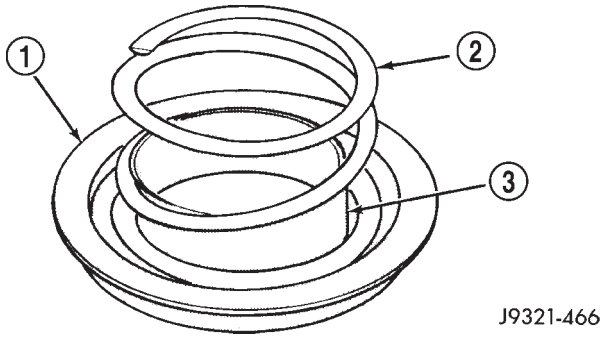

Fig. 100 Clutch Piston Spring Installation

1 - RETAINER
2 - CLUTCH SPRING
3 - PISTON

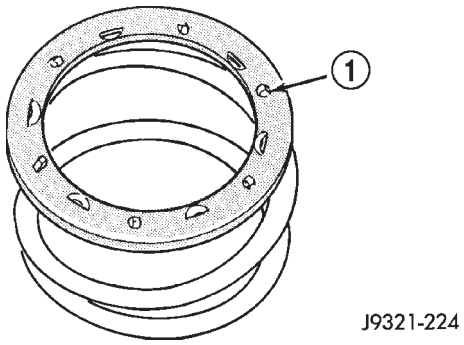

Fig. 101 Correct Spring Retainer Installed Position

1 - SMALL TABS ON RETAINER FACE UPWARD

Clearance should be 1.70 to 3.40 mm (0.067 to 0.134 in.). If clearance is incorrect, clutch discs, plates, pressure plates and snap-ring may have to be changed.

FRONT SERVO

DESCRIPTION

The kickdown servo (Fig. 102) consists of a two-land piston with an inner piston, a piston rod and guide, and a return spring. The dual-land piston uses seal rings on its outer diameters and an O-ring for the inner piston.

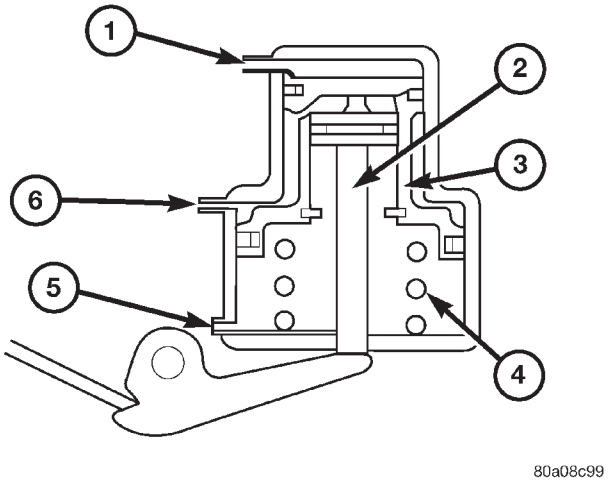

Fig. 102 Front Servo

1 - VENT
2 -PISTON ROD
3 - PISTON
4 - SPRING
5 - RELEASE PRESSURE
6 - APPLY PRESSURE

OPERATION

The application of the piston is accomplished by applying pressure between the two lands of the piston. The pressure acts against the larger lower land to push the piston downward, allowing the piston rod to extend though its guide against the apply lever. Release of the servo at the 2-3 upshift is accomplished by a combination of spring and line pressure, acting on the bottom of the larger land of the piston. The small piston is used to cushion the application of the band by bleeding oil through a small orifice in the larger piston. The release timing of the kickdown servo is very important to obtain a smooth but firm shift. The release has to be very quick, just as the front clutch application is taking place. Otherwise, engine runaway or a shift hesitation will occur. To accomplish this, the band retains its holding capacity until the front clutch is applied, giving a small amount of overlap between them.

FRONT SERVO (Continued)

DISASSEMBLY

(1) Remove seal ring from rod guide (Fig. 103).

(2) Remove small snap-ring from servo piston rod. Then remove piston rod, spring and washer from piston.

(3) Remove and discard servo component O-ring and seal rings.

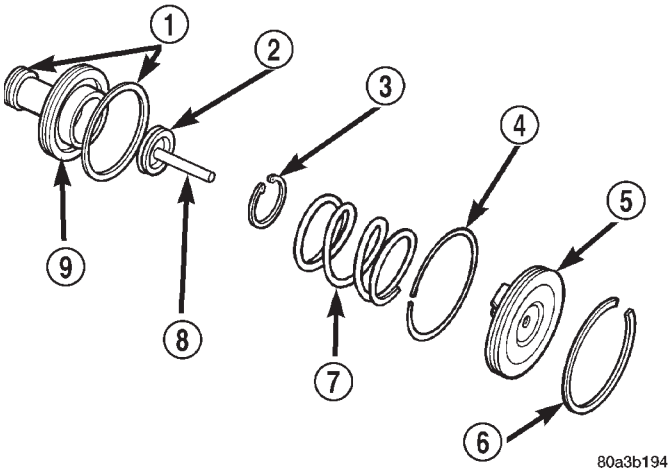

Fig. 103 Front Servo

1 - PISTON RINGS
2 - O-RING
3 - SNAP-RING
4 - SEAL RING
5 - PISTON ROD GUIDE
6 - SNAP-RING
7 - SERVO SPRING
8 - PISTON ROD
9 - SERVO PISTON

CLEANING

Clean the servo piston components (Fig. 104) with solvent and dry them with compressed air.

INSPECTION

Inspect the servo components (Fig. 105). Replace the springs if collapsed, distorted or broken. Replace the guide, rod and piston if cracked, bent, or worn. Discard the servo snap-ring if distorted or warped.

Check the servo piston bore for wear. If the bore is severely scored, or damaged, it will be necessary to replace the case.

Replace any servo component if doubt exists about condition. Do not reuse suspect parts.

ASSEMBLY

Clean and inspect front servo components.

(1) Lubricate new O-ring and seal rings with petroleum jelly and install them on piston, guide and rod.

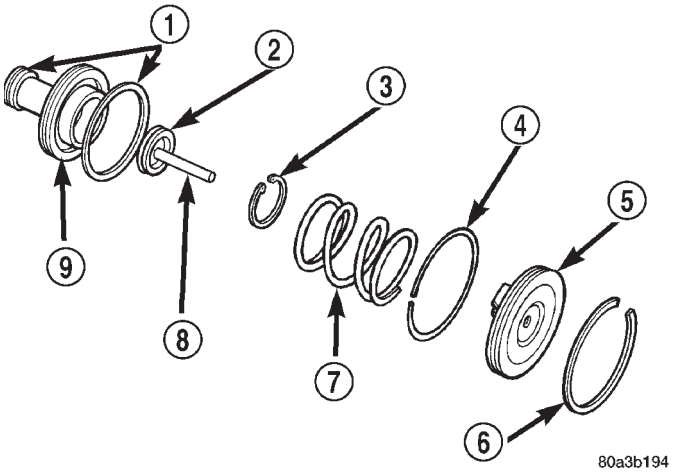

Fig. 104 Front Servo Piston

1 - PISTON RINGS
2 - O-RING
3 - SNAP-RING
4 - SEAL RING
5 - PISTON ROD GUIDE
6 - SNAP-RING
7 - SERVO SPRING
8 - PISTON ROD
9 - SERVO PISTON

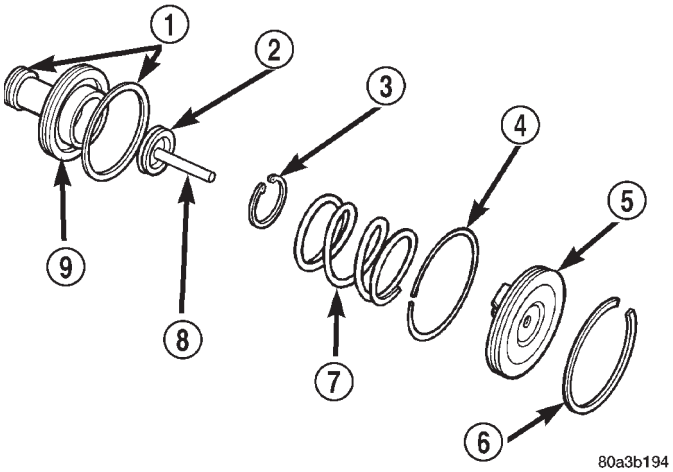

Fig. 105 Front Servo Piston

1 - PISTON RINGS
2 - O-RING
3 - SNAP-RING
4 - SEAL RING
5 - PISTON ROD GUIDE
6 - SNAP-RING
7 - SERVO SPRING
8 - PISTON ROD
9 - SERVO PISTON

(2) Install rod in piston. Install spring and washer on rod. Compress spring and install snap-ring (Fig. 106).

FRONT SERVO (Continued)

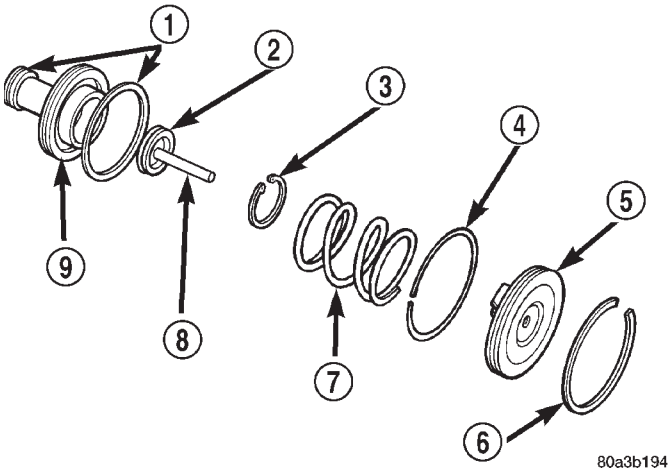

Fig. 106 Front Servo

1 - PISTON RINGS
2 - O-RING
3 - SNAP-RING
4 - SEAL RING
5 - PISTON ROD GUIDE
6 - SNAP-RING
7 - SERVO SPRING
8 - PISTON ROD
9 - SERVO PISTON

GEARSHIFT CABLE

DIAGNOSIS AND TESTING - GEARSHIFT CABLE

(1) The floor shifter lever and gate positions should be in alignment with all transmission PARK, NEUTRAL, and gear detent positions.

(2) Engine starts must be possible with floor shift lever in PARK or NEUTRAL gate positions only. Engine starts must not be possible in any other gear position.

(3) With floor shift lever handle push-button not depressed and lever in:

(a) PARK position - Apply forward force on center of handle and remove pressure. Engine starts must be possible.

(b) PARK position - Apply rearward force on center of handle and remove pressure. Engine starts must be possible.

(c) NEUTRAL position - Normal position. Engine starts must be possible.

(d) NEUTRAL position - Engine running and brakes applied, apply forward force on center of shift handle. Transmission shall not be able to shift from NEUTRAL to REVERSE.

REMOVAL

(1) Shift transmission into PARK.

(2) Raise vehicle.

(3) Remove the shift cable eyelet from the transmission manual shift lever (Fig. 107).

(4) Remove shift cable from the cable support bracket.

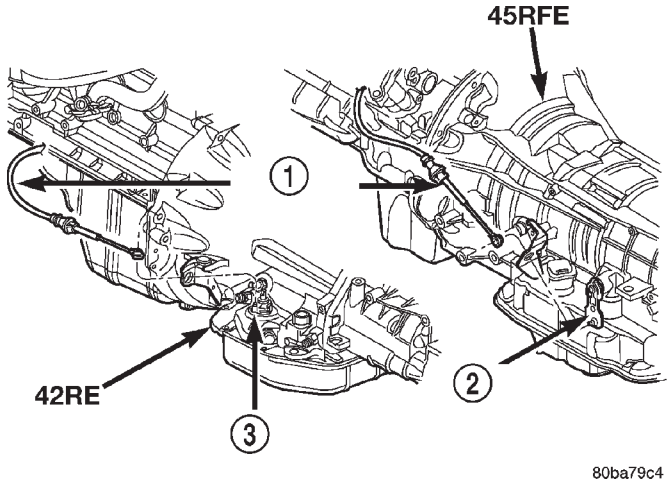

Fig. 107 Remove Shift Cable From Transmission

1 - SHIFT CABLE
2 - MANUAL LEVER
3 - MANUAL LEVER

(5) Lower vehicle.

(6) Remove necessary console parts for access to shift lever assembly and shift cable. (Refer to 23 - BODY/INTERIOR/FLOOR CONSOLE - REMOVAL)

(7) Disconnect cable at shift lever and shifter assembly bracket (Fig. 108).

(8) Remove the nuts holding the shift cable seal plate to the floor pan (Fig. 109).

(9) Pull cable through floor panel opening.

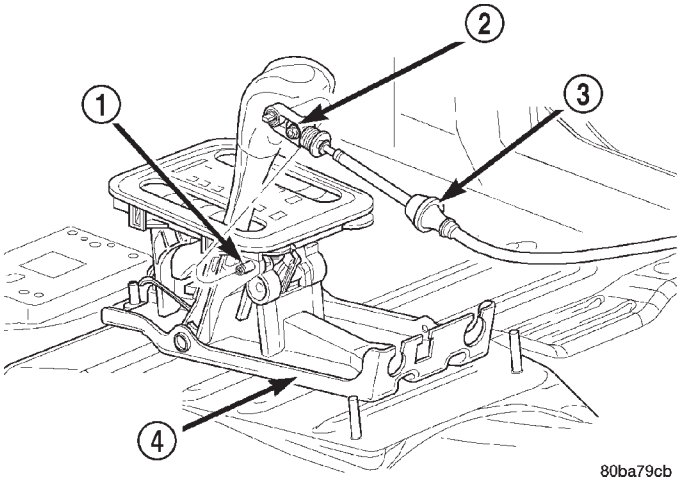

Fig. 108 Transmission Shift Cable at Shifter

1 - SHIFT LEVER PIN
2 - ADJUSTMENT SCREW
3 - SHIFT CABLE
4 - SHIFTER ASSEMBLY BRACKET

GEARSHIFT CABLE (Continued)

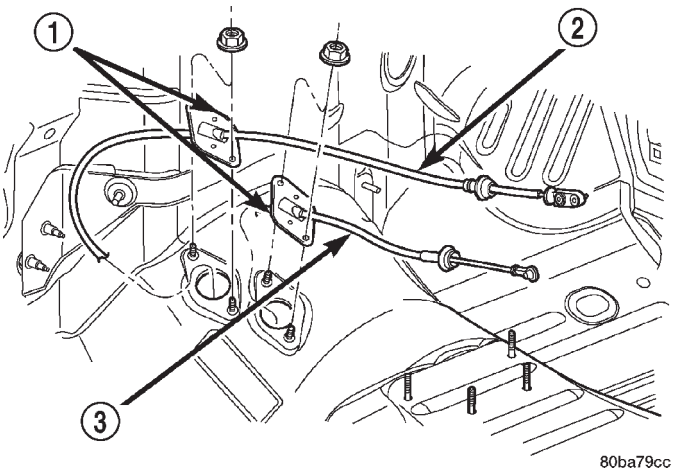

Fig. 109 Shift Cables at Floor Pan

1 - SEAL PLATES
2 - TRANSMISSION SHIFT CABLE
3 - TRANSFER CASE SHIFT CABLE

(10) Remove shift cable from vehicle.

INSTALLATION

(1) Route cable through hole in floor pan.

(2) Install seal plate to studs in floor pan.

(3) Install nuts to hold seal plate to floor pan. Tighten nuts to 7 N·m (65 in.lbs.).

(4) Install the shift cable to the shifter assembly bracket. Push cable into the bracket until secure.

(5) Place the floor shifter lever in PARK position.

(6) Loosen the adjustment screw on the shift cable.

(7) Snap the shift cable onto the shift lever pin.

(8) Raise the vehicle.

(9) Install the shift cable to the shift cable support bracket.

(10) Shift the transmission into PARK. PARK is the rearmost detent position on the transmission manual shift lever.

(11) Snap the shift cable onto the transmission manual shift lever.

(12) Lower vehicle.

(13) Verify that the shift lever is in the PARK position.

(14) Tighten the adjustment screw to 7 N·m (65 in.lbs.).

(15) Verify correct shifter operation.

(16) Install any console parts removed for access to shift lever assembly and shift cable. (Refer to 23 - BODY/INTERIOR/FLOOR CONSOLE - INSTALLATION)

ADJUSTMENTS - GEARSHIFT CABLE

Check adjustment by starting the engine in PARK and NEUTRAL. Adjustment is CORRECT if the engine starts only in these positions. Adjustment is INCORRECT if the engine starts in one but not both positions. If the engine starts in any position other than PARK or NEUTRAL, or if the engine will not start at all, the park/neutral position switch or TRS may be faulty.

(1) Shift transmission into PARK.

(2) Remove floor console as necessary for access to the shift cable adjustment. (Refer to 23 - BODY/INTERIOR/FLOOR CONSOLE - REMOVAL)

(3) Loosen the shift cable adjustment screw (Fig. 110).

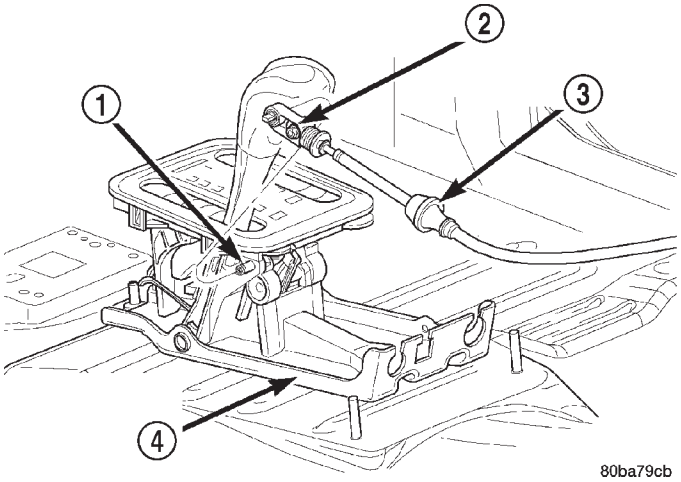

Fig. 110 Shift Cable at the Shifter

1 - SHIFT LEVER PIN
2 - ADJUSTMENT SCREW
3 - SHIFT CABLE
4 - SHIFTER ASSEMBLY BRACKET

(4) Raise vehicle.

(5) Unsnap cable eyelet from transmission shift lever (Fig. 111).

(6) Verify transmission shift lever is in PARK detent by moving lever fully rearward. Last rearward detent is PARK position.

(7) Verify positive engagement of transmission park lock by attempting to rotate propeller shaft. Shaft will not rotate when park lock is engaged.

(8) Snap cable eyelet onto transmission shift lever.

(9) Lower vehicle

(10) Tighten the shift cable adjustment screw to 7 N·m (65 in.lbs.).

(11) Verify correct operation.

(12) Install any floor console components removed for access. (Refer to 23 - BODY/INTERIOR/FLOOR CONSOLE - INSTALLATION)

GEARSHIFT CABLE (Continued)

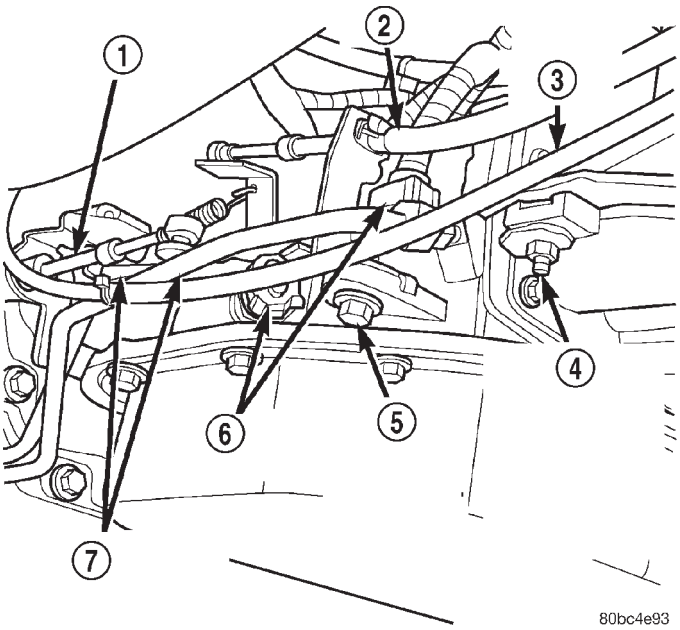

Fig. 111 Shift Cable at Transmission

1 - TRANSMISSION SHIFTER CABLE
2 - THROTTLE VALVE CABLE
3 - TRANSFER CASE SHIFTER CABLE
4 - TRANSFER CASE SHIFTER CABLE BRACKET RETAINING BOLT(S)
5 - THROTTLE VALVE CABLE BRACKET RETAINING BOLT
6 - ELECTRICAL CONNECTORS
7 - TRANSMISSION FLUID LINES

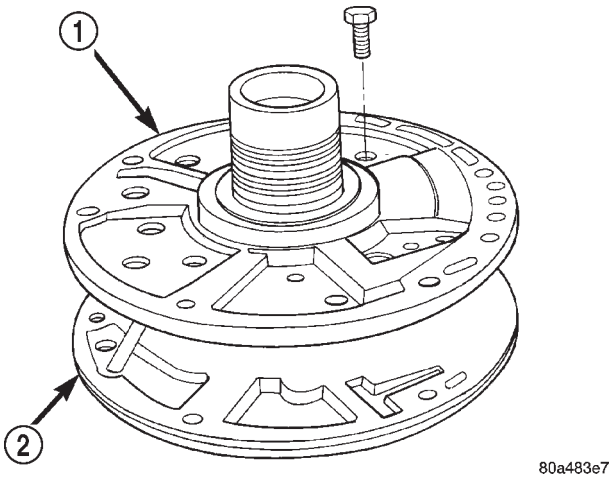

Fig. 112 Oil Pump and Reaction Shaft Support

1 - REACTION SHAFT SUPPORT
2 - PUMP

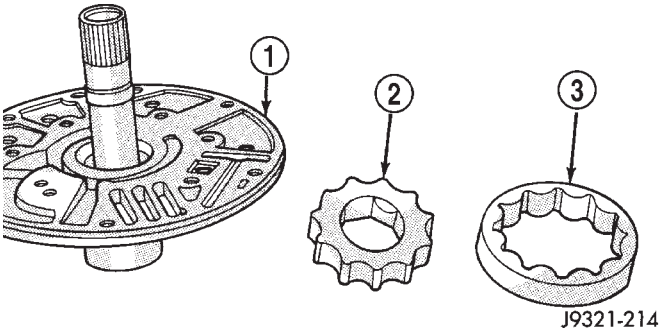

Fig. 113 Pump Gear Removal

1 - REACTION SHAFT SUPPORT
2 - INNER GEAR
3 - OUTER GEAR

OIL PUMP

DESCRIPTION

The oil pump (Fig. 112) is located in the pump housing inside the bell housing of the transmission case. The oil pump consists of an inner and outer gear (Fig. 113), a housing, and a cover that also serves as the reaction shaft support.

OPERATION

As the torque converter rotates, the converter hub rotates the inner and outer gears. As the gears rotate, the clearance between the gear teeth increases in the crescent area, and creates a suction at the inlet side of the pump. This suction draws fluid through the pump inlet from the oil pan. As the clearance between the gear teeth in the crescent area decreases, it forces pressurized fluid into the pump outlet and to the valve body.

STANDARD PROCEDURES - OIL PUMP VOLUME CHECK

Measuring the oil pump output volume will determine if sufficient oil flow to the transmission oil cooler exists, and whether or not an internal transmission failure is present.

Verify that the transmission fluid is at the proper level. Refer to the Fluid Level Check procedure in this section. If necessary, fill the transmission to the proper level with Mopar® ATF +4, type 9602, Automatic Transmission Fluid.

(1) Disconnect the **To cooler** line at the cooler inlet and place a collecting container under the disconnected line.

CAUTION: With the fluid set at the proper level, fluid collection should not exceed (1) quart or internal damage to the transmission may occur.

(2) Run the engine **at curb idle speed**, with the shift selector in neutral.

(3) If one quart of transmission fluid is collected in the container in 20 seconds or less, oil pump flow volume is within acceptable limits. If fluid flow is inter-

OIL PUMP (Continued)

mittent, or it takes more than 20 seconds to collect one quart of fluid, refer to the Hydraulic Pressure tests in this section for further diagnosis.

(4) Re-connect the **To cooler** line to the transmission cooler inlet.

(5) Refill the transmission to proper level.

DISASSEMBLY

(1) Remove seal ring from housing and reaction shaft support (Fig. 114).

(2) Mark pump housing and support assembly for alignment reference.

(3) Remove bolts attaching pump body to support (Fig. 115).

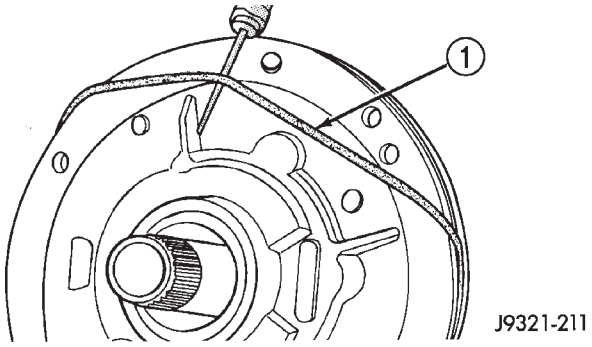

Fig. 114 Removing Pump Seal Ring

1 - PUMP HOUSING SEAL RING

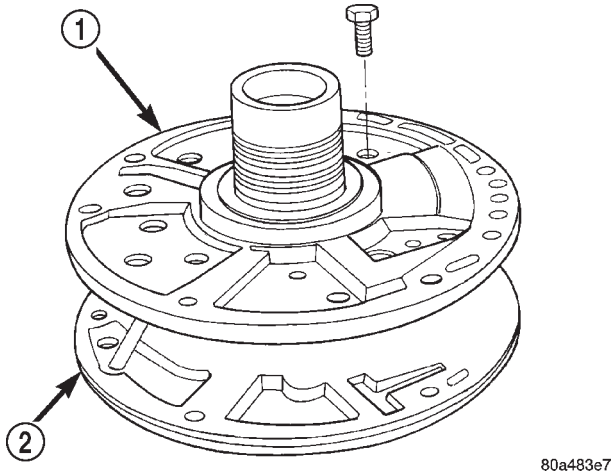

Fig. 115 Pump Support Bolts

1 - REACTION SHAFT SUPPORT
2 - PUMP

(4) Separate support from pump housing (Fig. 116).

(5) Remove inner and outer gears from reaction shaft support (Fig. 117).

(6) If pump seal was not removed during transmission disassembly, remove seal with punch and hammer.

(7) Remove front clutch thrust washer from support hub (Fig. 118).

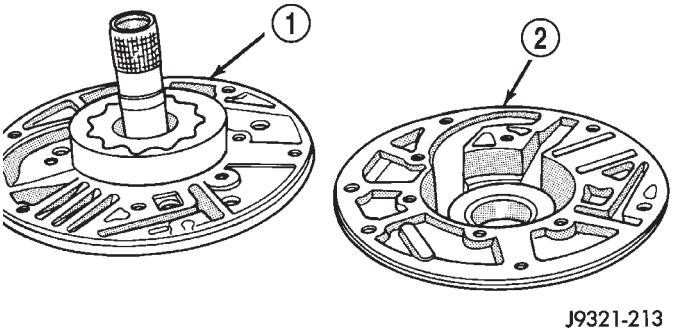

Fig. 116 Separating Pump Housing From Reaction Shaft Support

1 - REACTION SHAFT SUPPORT
2 - PUMP HOUSING

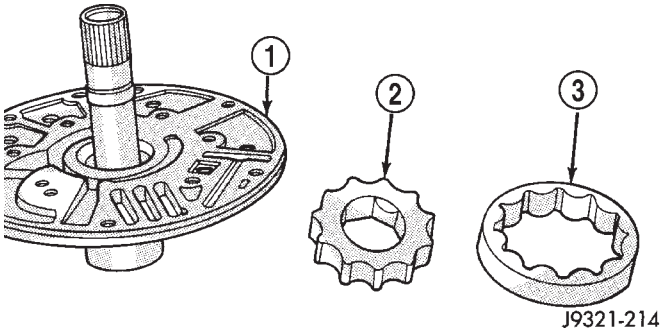

Fig. 117 Pump Gear Removal

1 - REACTION SHAFT SUPPORT
2 - INNER GEAR
3 - OUTER GEAR

OIL PUMP BUSHING REPLACEMENT

(1) Remove pump bushing with Tool Handle C-4171 and Bushing Remover SP-3551 from Tool Set C-3887-J (Fig. 119).

(2) Install new pump bushing with Tool Handle C-4171 and Bushing Installer SP-5117 (Fig. 119). Bushing should be flush with pump housing bore.

(3) Stake new pump bushing in two places with blunt punch (Fig. 120). Remove burrs from stake points with knife blade afterward.

REACTION SHAFT SUPPORT BUSHING REMOVAL

(1) Assemble Bushing Remover Tools SP-1191, 3633 and 5324 (Fig. 121). Do not clamp any part of reaction shaft or support in vise.

(2) Hold Cup Tool SP-3633 firmly against reaction shaft and thread remover SP-5324 into bushing as far as possible by hand. Then thread remover tool 3-4 additional turns into bushing with a wrench.

OIL PUMP (Continued)

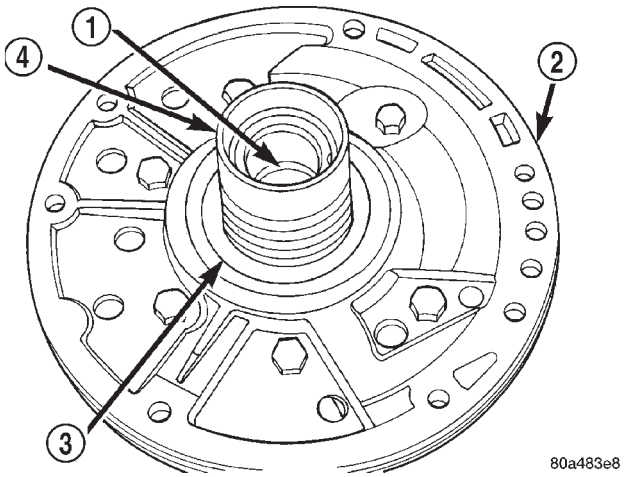

Fig. 118 Support Hub Thrust Washer

1 - BUSHING
2 - REACTION SHAFT SUPPORT
3 - THRUST WASHER
4 - HUB

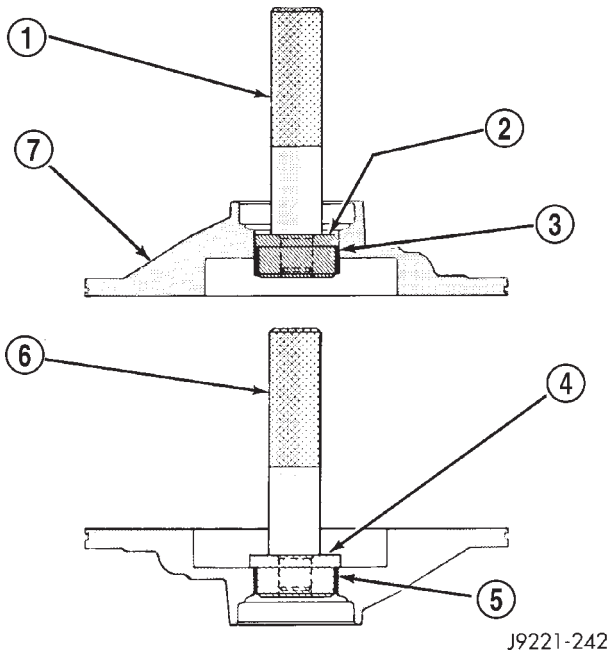

Fig. 119 Removing Oil Pump Bushing

1 - SPECIAL TOOL C-4171
2 - SPECIAL TOOL SP-3551
3 - BUSHING
4 - SPECIAL TOOL SP-5117
5 - BUSHING
6 - SPECIAL TOOL C-4171
7 - PUMP HOUSING

(3) Turn remover tool hex nut down against remover cup to pull bushing from shaft. Clean all chips from shaft after bushing removal.

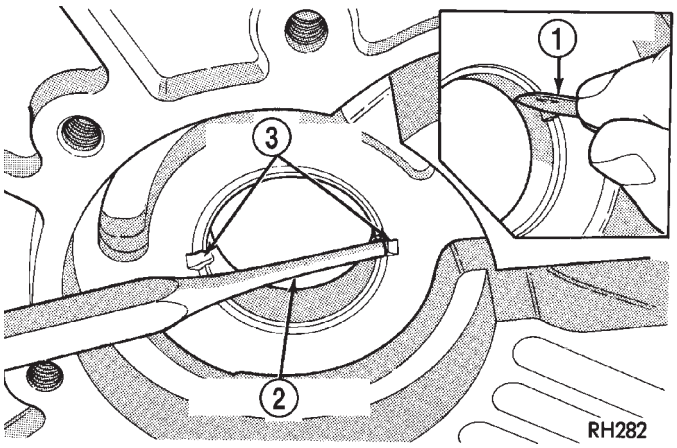

Fig. 120 Staking Oil Pump Bushing

1 - NARROW BLADE
2 - BLUNT PUNCH
3 - TWO STAKES

(4) Lightly grip old bushing in vise or with pliers and back remover tool out of bushing.

(5) Assemble Bushing Installer Tools C-4171 and SP-5325 (Fig. 121).

(6) Slide new bushing onto Installer Tool SP-5325.

(7) Position reaction shaft support upright on a clean smooth surface.

(8) Align bushing in bore. Then tap bushing into place until Bushing Installer SP-5325 bottoms.

(9) Clean reaction shaft support thoroughly after installing bushing.

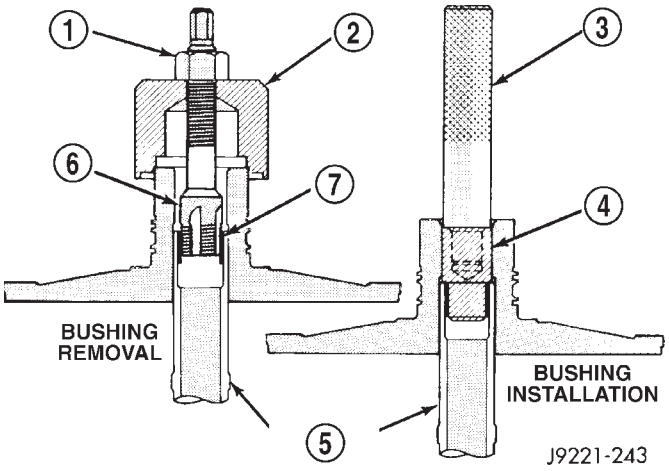

Fig. 121 Replacing Reaction Shaft Support Bushing

1 - SPECIAL TOOL SP-1191
2 - SPECIAL TOOL SP-3633
3 - SPECIAL TOOL C-4171
4 - SPECIAL TOOL SP-5325
5 - REACTION SHAFT
6 - SPECIAL TOOL SP-5324
7 - BUSHING

OIL PUMP (Continued)

CLEANING

Clean pump and support components with solvent and dry them with compressed air.

INSPECTION

Check condition of the seal rings and thrust washer on the reaction shaft support. The seal rings do not need to be replaced unless cracked, broken, or severely worn.

Inspect the pump and support components. Replace the pump or support if the seal ring grooves or machined surfaces are worn, scored, pitted, or damaged. Replace the pump gears if pitted, worn chipped, or damaged.

Inspect the pump bushing. Then check the reaction shaft support bushing. Replace either bushing only if heavily worn, scored or damaged. It is not necessary to replace the bushings unless they are actually damaged.

Clearance between outer gear and reaction shaft housing should be 0.010 to 0.063 mm (0.0004 to 0.0025 in.). Clearance between inner gear and reaction shaft housing should be 0.010 to 0.063 mm (0.0004 to 0.0025 in.). Both clearances can be measured at the same time by installing the gears in the pump body and measure pump component clearances as follows:

(1) Position an appropriate piece of Plastigage™ across both gears.

(2) Align the plastigage to a flat area on the reaction shaft housing.

(3) Install the reaction shaft to the pump housing.

(4) Separate the reaction shaft housing from the pump housing and measure the Plastigage™ following the instructions supplied with it.

Clearance between inner gear tooth and outer gear should be 0.08 to 0.19 mm (0.0035 to 0.0075 in.). Measure clearance with an appropriate feeler gauge.

Clearance between outer gear and pump housing should be 0.10 to 0.19 mm (0.004 to 0.0075 in.). Measure clearance with an appropriate feeler gauge.

ASSEMBLY

(1) Lubricate gear bore in pump housing with transmission fluid.

(2) Lubricate pump gears with transmission fluid.

(3) Support pump housing on wood blocks (Fig. 122).

(4) Install outer gear in pump housing (Fig. 122). Gear can be installed either way (it is not a one-way fit).

(5) Install pump inner gear (Fig. 123).

CAUTION: The pump inner gear is a one way fit. The bore on one side of the gear inside diameter (I.D.) is chamfered. Be sure the chamfered side faces forward (to front of pump).

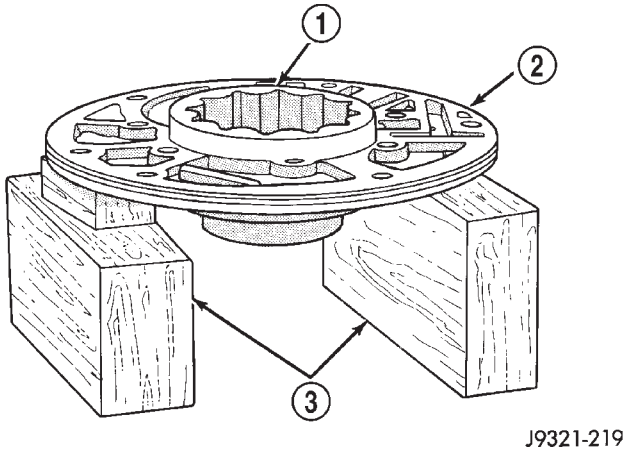

Fig. 122 Supporting Pump And Installing Outer Gear

1 - OUTER GEAR
2 - PUMP HOUSING
3 - WOOD BLOCKS

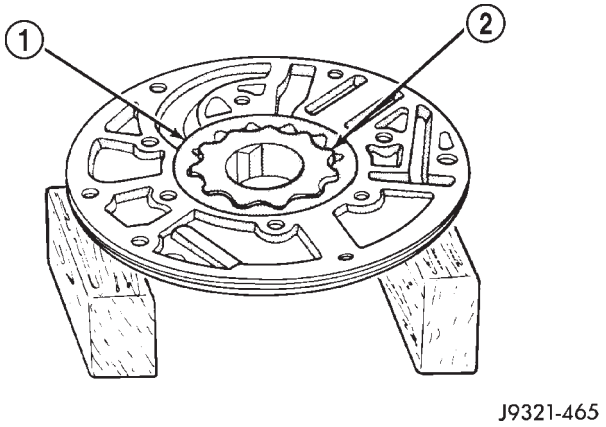

Fig. 123 Pump Inner Gear Installation

1 - OUTER GEAR
2 - INNER GEAR

(6) Install new thrust washer on hub of reaction shaft support. Lubricate washer with transmission fluid or petroleum jelly.

(7) If reaction shaft seal rings are being replaced, install new seal rings on support hub (Fig. 124). Lubricate seal rings with transmission fluid or petroleum jelly after installation. Squeeze each ring until ring ends are securely hooked together.

CAUTION: The reaction shaft support seal rings will break if overspread, or twisted. If new rings are being installed, spread them only enough for installation. Also be very sure the ring ends are securely hooked together after installation. Otherwise, the rings will either prevent pump installation, or break during installation.

OIL PUMP (Continued)

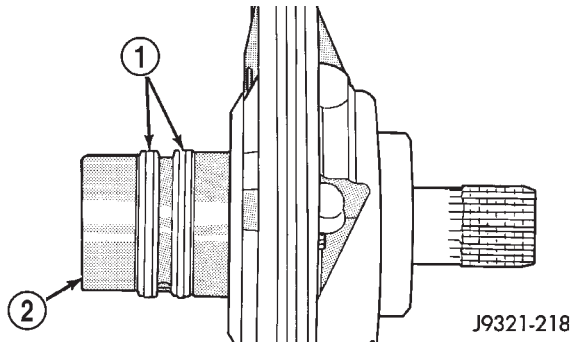

Fig. 124 Hub Seal Ring Position

1 - SEAL RINGS
2 - SUPPORT HUB

(8) Install reaction shaft support on pump housing (Fig. 125).

(9) Align reaction support on pump housing. Use alignment marks made at disassembly. Or, rotate support until bolt holes in support and pump housing are all aligned (holes are offset for one-way fit).

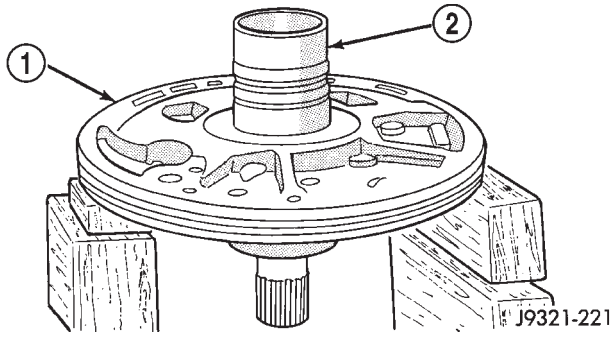

Fig. 125 Assembling Reaction Shaft Support And Pump Housing

1 - PUMP HOUSING
2 - REACTION SHAFT SUPPORT

(10) Install all bolts that attach support to pump housing. Then tighten bolts finger tight.

(11) Tighten support-to-pump bolts to required torque as follows:

(a) Reverse pump assembly and install it in transmission case. Position pump so bolts are facing out and are accessible.

(b) Secure pump assembly in case with 2 or 3 bolts, or with pilot studs.

(c) Tighten support-to-pump bolts to 20 N·m (15 ft. lbs.).

(d) Remove pump assembly from transmission case.

(12) Install new oil seal in pump with Special Tool C-4193 and Tool Handle C-4171 (Fig. 126). Be sure seal lip faces inward.

(13) Install new seal ring around pump housing. Be sure seal is properly seated in groove.

(14) Lubricate lip of pump oil seal and O-ring seal with transmission fluid.

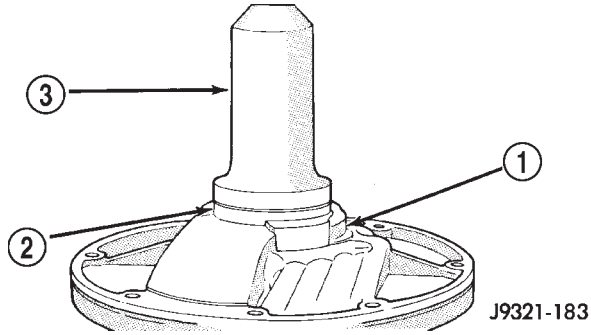

Fig. 126 Pump Oil Seal Installation

1 - PUMP BODY
2 - PUMP SEAL
3 - SPECIAL TOOL C-4193

OUTPUT SHAFT FRONT BEARING

REMOVAL

(1) Remove overdrive unit from the vehicle.

(2) Remove overdrive geartrain from housing.

(3) Remove snap-ring holding output shaft front bearing to overdrive geartrain. (Fig. 127).

(4) Pull bearing from output shaft.

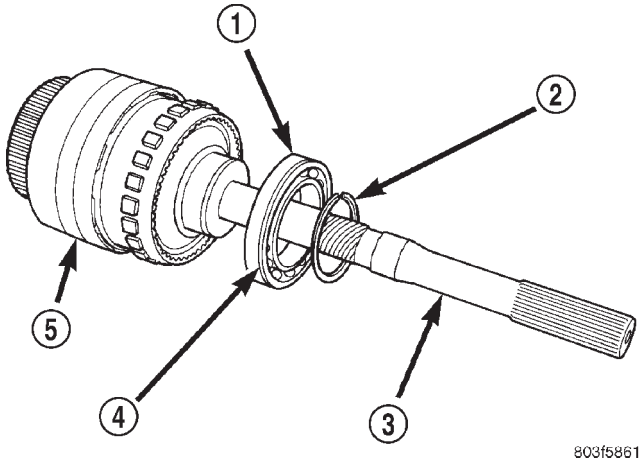

Fig. 127 Output Shaft Front Bearing

1 - OUTPUT SHAFT FRONT BEARING
2 - SNAP-RING
3 - OUTPUT SHAFT
4 - GROOVE TO REAR
5 - OVERDRIVE GEARTRAIN

OUTPUT SHAFT FRONT BEARING (Continued)

INSTALLATION

(1) Place replacement bearing in position on geartrain with locating retainer groove toward the rear.

(2) Push bearing onto shaft until the snap-ring groove is visible.

(3) Install snap-ring to hold bearing onto output shaft.

(4) Install overdrive geartrain into housing.

(5) Install overdrive unit in vehicle.

OUTPUT SHAFT REAR BEARING

REMOVAL

(1) Remove overdrive unit from the vehicle. (Refer to 21 - TRANSMISSION/TRANSAXLE/AUTOMATIC/ OVERDRIVE - REMOVAL)

(2) Remove overdrive geartrain from housing.

(3) Remove snap-ring holding output shaft rear bearing into overdrive housing (Fig. 128).

(4) Using a suitable driver inserted through the rear end of housing, drive bearing from housing.

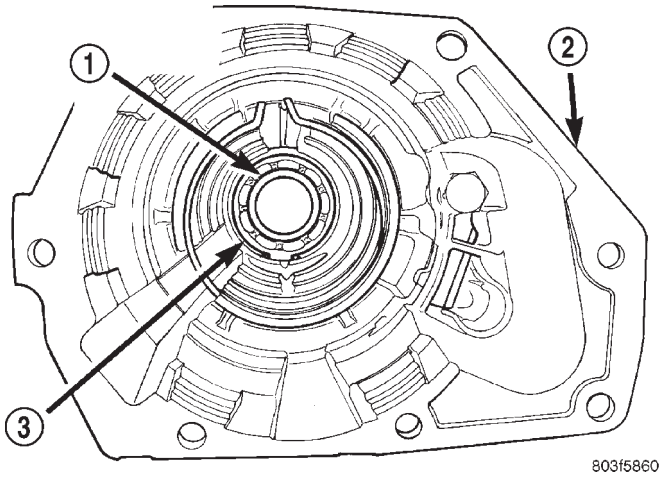

Fig. 128 Output Shaft Rear Bearing

1 - OUTPUT SHAFT REAR BEARING
2 - OVERDRIVE HOUSING
3 - SNAP-RING

INSTALLATION

(1) Place replacement bearing in position in housing.

(2) Using a suitable driver, drive bearing into housing until the snap-ring groove is visible.

(3) Install snap-ring to hold bearing into housing (Fig. 128).

(4) Install overdrive geartrain into housing.

(5) Install overdrive unit in vehicle.

OVERDRIVE CLUTCH

DESCRIPTION

The overdrive clutch (Fig. 129) is composed of the pressure plate, clutch plates, holding discs, overdrive piston retainer, piston, piston spacer, and snap-rings. The overdrive clutch is the forwardmost component in the transmission overdrive unit and is considered a holding component. The overdrive piston retainer, piston, and piston spacer are located on the rear of the main transmission case.

NOTE: The number of discs and plates may vary with each engine and vehicle combination.

OPERATION

To apply the clutch, pressure is applied between the piston retainer and piston. The fluid pressure is provided by the oil pump, transferred through the control valves and passageways, and enters the clutch through passages at the lower rear portion of the valve body area. With pressure applied between the piston retainer and piston, the piston moves away from the piston retainer and compresses the clutch pack. This action applies the clutch pack, allowing torque to flow through the intermediate shaft into the overdrive planetary gear set. The overdrive clutch discs are attached to the overdrive clutch hub while the overdrive clutch plates, reaction plate, and pressure plate are lugged to the overdrive housing. This allows the intermediate shaft to transfer the engine torque to the planetary gear and overrunning clutch. This drives the planetary gear inside the annulus, which is attached to the overdrive clutch drum and output shaft, creating the desired gear ratio. The waved snap-ring is used to cushion the application of the clutch pack.

OVERDRIVE CLUTCH (Continued)

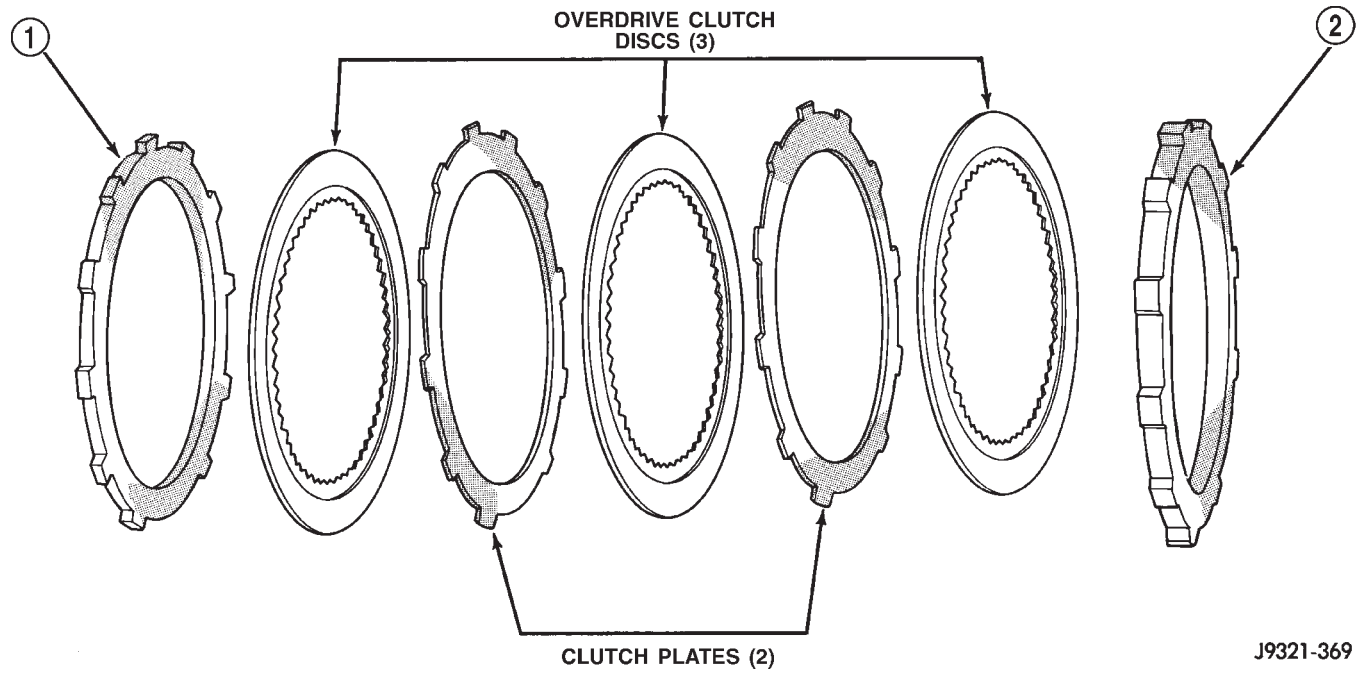

Fig. 129 Overdrive Clutch

1 - REACTION PLATE
2 - PRESSURE PLATE

OVERDRIVE OFF SWITCH

DESCRIPTION

The overdrive OFF (control) switch is located in the shifter handle. The switch is a momentary contact device that signals the PCM to toggle current status of the overdrive function.

OPERATION

At key-on, fourth gear operation is allowed. Pressing the switch once causes the overdrive OFF mode to be entered and the overdrive OFF switch lamp to be illuminated. Pressing the switch a second time causes normal overdrive operation to be restored and the overdrive lamp to be turned off. The overdrive OFF mode defaults to ON after the ignition switch is cycled OFF and ON. The normal position for the control switch is the ON position. The switch must be in this position to energize the solenoid and allow upshifts to fourth gear. The control switch indicator light illuminates only when the overdrive switch is turned to the OFF position, or when illuminated by the powertrain control module.

DIAGNOSIS AND TESTING - OVERDRIVE ELECTRICAL CONTROLS

The overdrive off switch, valve body solenoid, case connectors and related wiring can all be tested with a 12 volt test lamp or a volt/ohmmeter. Check continuity of each component when diagnosis indicates this is necessary.

Switch and solenoid continuity should be checked whenever the transmission fails to shift into fourth gear range.

OVERDRIVE UNIT

REMOVAL

(1) Shift transmission into PARK.
(2) Raise vehicle.
(3) Remove transfer case, if equipped.
(4) Mark propeller shaft universal joint(s) and axle pinion yoke, or the companion flange and flange yoke, for alignment reference at installation, if neccesary.
(5) Disconnect and remove the rear propeller shaft, if necessary. (Refer to 3 - DIFFERENTIAL & DRIVELINE/PROPELLER SHAFT/PROPELLER SHAFT - REMOVAL)
(6) Remove transmission oil pan, remove gasket, drain oil and reinstall pan.
(7) If overdrive unit had malfunctioned, or if fluid is contaminated, remove entire transmission. If diagnosis indicated overdrive problems only, remove just the overdrive unit.
(8) Support transmission with transmission jack.
(9) Remove bolts attaching overdrive unit to transmission (Fig. 130).

OVERDRIVE UNIT (Continued)

CAUTION: Support the overdrive unit with a jack before moving it rearward. This is necessary to prevent damaging the intermediate shaft. Do not allow the shaft to support the entire weight of the overdrive unit.

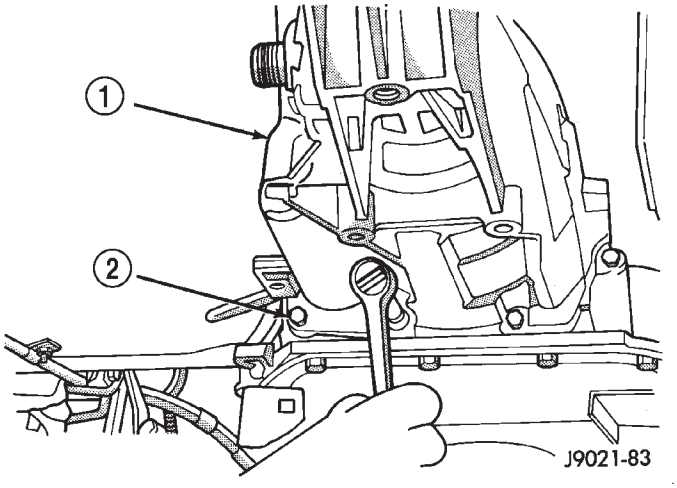

Fig. 130 Overdrive Unit Bolts

1 - OVERDRIVE UNIT
2 - ATTACHING BOLTS (7)

(10) Carefully work overdrive unit off intermediate shaft. Do not tilt unit during removal. Keep it as level as possible.

(11) If overdrive unit does not require service, immediately insert Alignment Tool 6227-2 in splines of planetary gear and overrunning clutch to prevent splines from rotating out of alignment. If misalignment occurs, overdrive unit will have to be disassembled in order to realign splines.

(12) Remove and retain overdrive piston thrust bearing. Bearing may remain on piston or in clutch hub during removal.

(13) Position drain pan on workbench.

(14) Place overdrive unit over drain pan. Tilt unit to drain residual fluid from case.

(15) Examine fluid for clutch material or metal fragments. If fluid contains these items, overhaul will be necessary.

(16) If overdrive unit does not require any service, leave alignment tool in position. Tool will prevent accidental misalignment of planetary gear and overrunning clutch splines.

DISASSEMBLY

(1) Remove transmission speed sensor and O-ring seal from overdrive case (Fig. 131).

(2) Remove overdrive piston thrust bearing (Fig. 132).

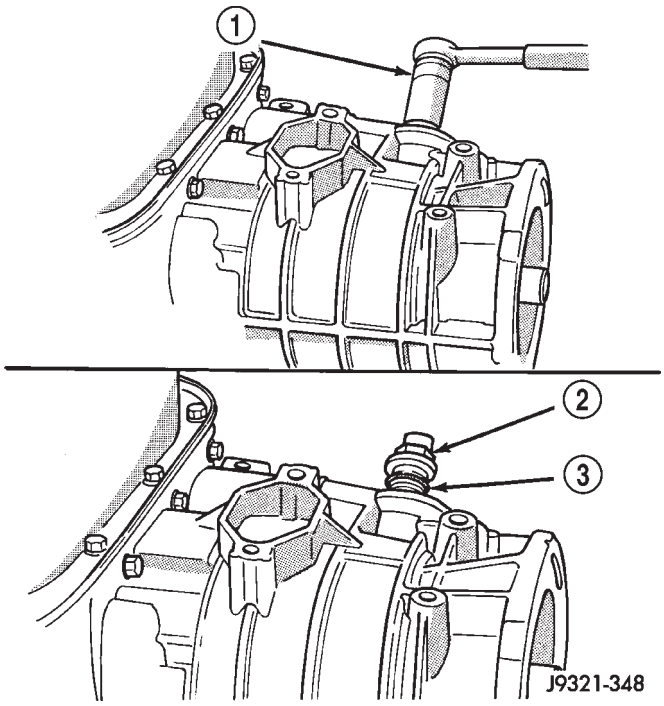

Fig. 131 Transmission Speed Sensor Removal

1 - SOCKET AND WRENCH
2 - SPEED SENSOR
3 - O-RING

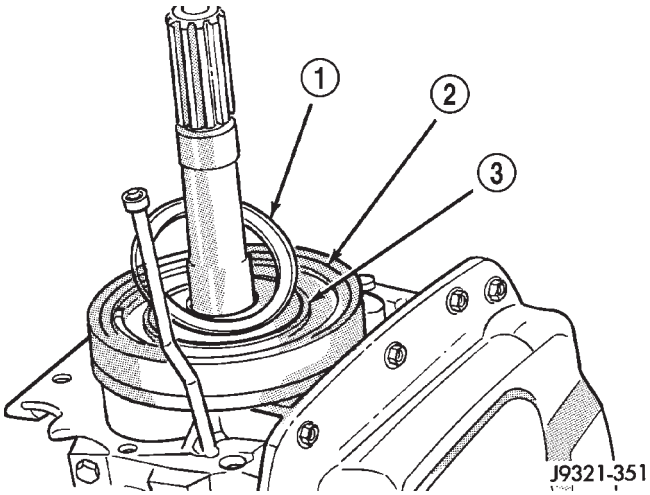

Fig. 132 Overdrive Piston Thrust Bearing Removal

1 - THRUST BEARING
2 - OVERDRIVE PISTON
3 - THRUST PLATE

OVERDRIVE PISTON

(1) Remove overdrive piston thrust plate (Fig. 133). Retain thrust plate. It is a select fit part and may possibly be reused.

(2) Remove intermediate shaft spacer (Fig. 134). Retain spacer. It is a select fit part and may possibly be reused.

OVERDRIVE UNIT (Continued)

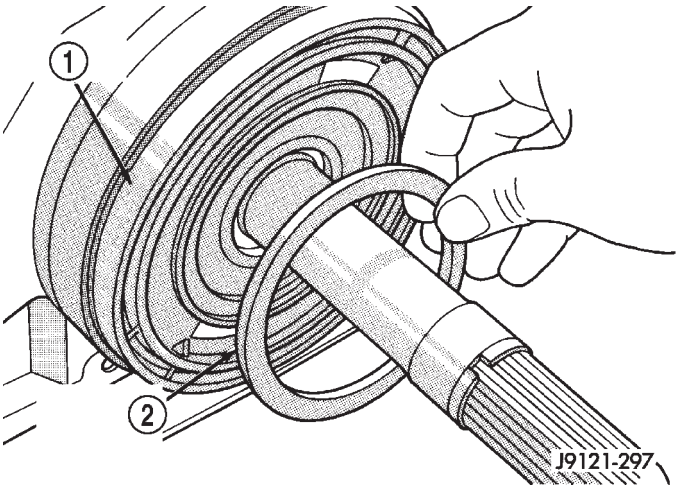

Fig. 133 Overdrive Piston Thrust Plate Removal

1 - OVERDRIVE PISTON
2 - OVERDRIVE PISTON SPACER (SELECT FIT)

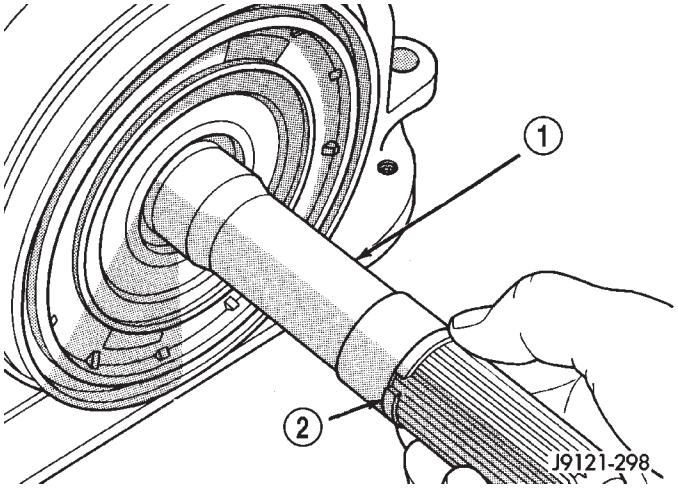

Fig. 134 Intermediate Shaft Spacer Location

1 - INTERMEDIATE SHAFT
2 - INTERMEDIATE SHAFT SPACER (SELECT FIT)

(3) Remove overdrive piston from retainer (Fig. 135).

OVERDRIVE CLUTCH PACK

(1) Remove overdrive clutch pack wire retaining ring (Fig. 136).

(2) Remove overdrive clutch pack (Fig. 137).

NOTE: The 42RE transmission has three clutch discs and two clutch plates.

(3) Note position of clutch pack components for assembly reference (Fig. 138).

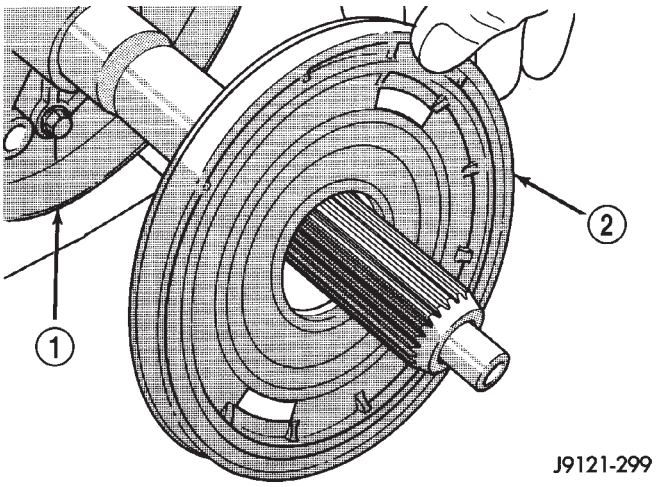

Fig. 135 Overdrive Piston Removal

1 - PISTON RETAINER
2 - OVERDRIVE PISTON

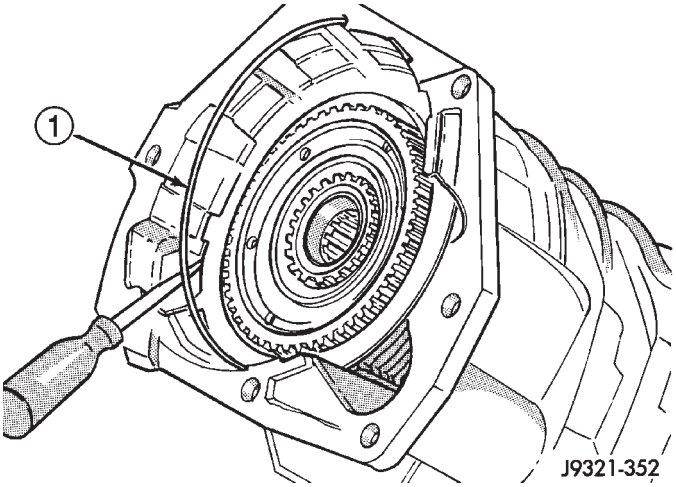

Fig. 136 Removing Overdrive Clutch Pack Retaining Ring

1 - OVERDRIVE CLUTCH PACK RETAINING RING

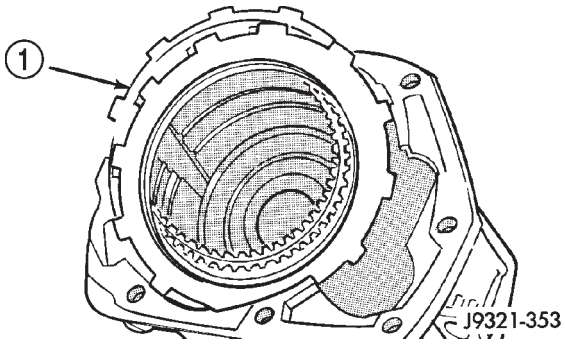

Fig. 137 Overdrive Clutch Pack Removal

1 - OVERDRIVE CLUTCH PACK

OVERDRIVE UNIT (Continued)

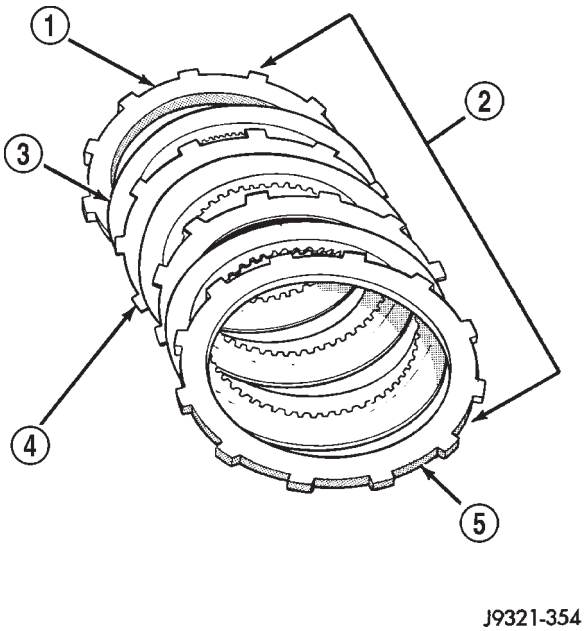

Fig. 138 42RE Overdrive Clutch Component Position

1 - PRESSURE PLATE (TO FRONT)
2 - OVERDRIVE CLUTCH PACK
3 - CLUTCH DISC (3)
4 - CLUTCH PLATE (2)
5 - REACTION PLATE (TO REAR)

OVERDRIVE GEARTRAIN

(1) Remove overdrive clutch wave spring (Fig. 139).

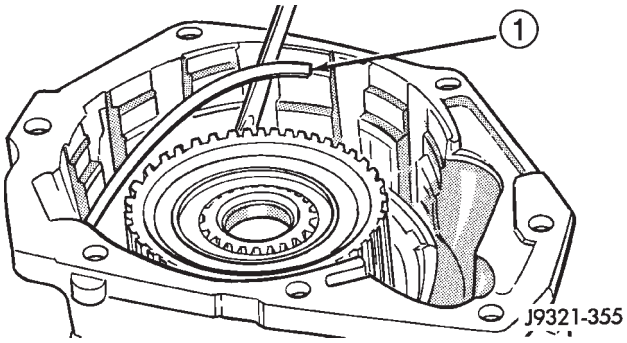

Fig. 139 Overdrive Clutch Wave

1 - WAVE SPRING

(2) Remove overdrive clutch reaction snap-ring (Fig. 140). Note that snap-ring is located in same groove as wave spring.

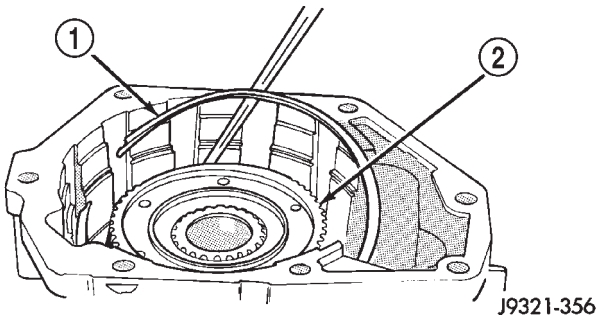

Fig. 140 Overdrive Clutch Reaction Snap-Ring Removal

1 - REACTION RING
2 - CLUTCH HUB

(3) Remove Torx™ head screws that attach access cover and gasket to overdrive case (Fig. 141).

(4) Remove access cover and gasket (Fig. 142).

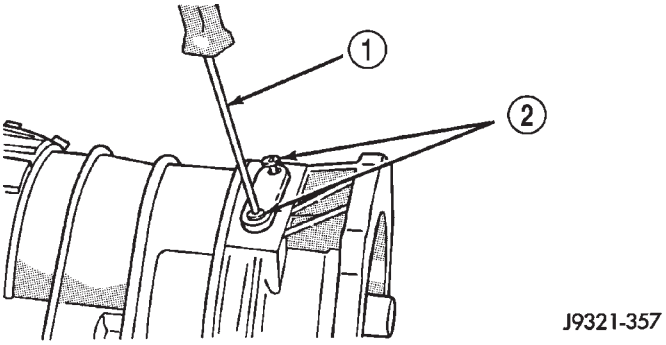

Fig. 141 Access Cover Screw Removal

1 - TORX SCREWDRIVER (T25)
2 - ACCESS COVER SCREWS

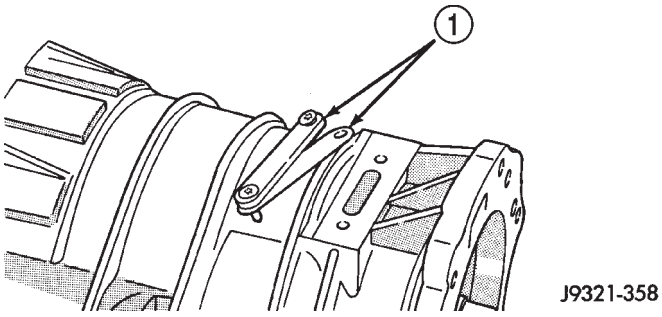

Fig. 142 Access Cover And Gasket Removal

1 - ACCESS COVER AND GASKET

OVERDRIVE UNIT (Continued)

(5) Expand output shaft bearing snap-ring with expanding-type snap-ring pliers. Then push output shaft forward to release shaft bearing from locating ring (Fig. 143).

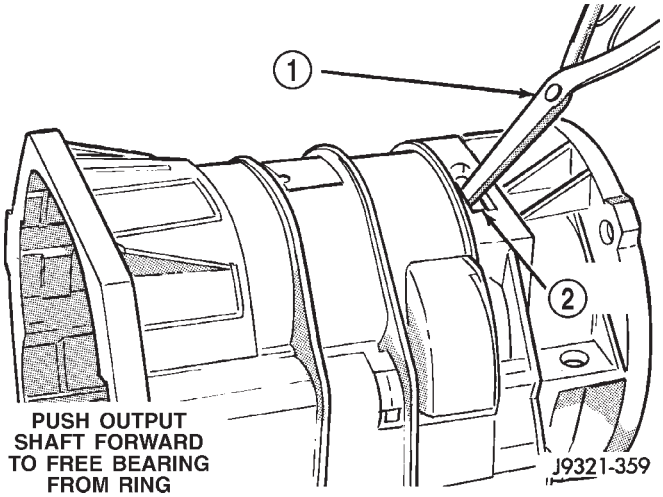

Fig. 143 Releasing Bearing From Locating Ring

1 - EXPAND BEARING LOCATING RING WITH SNAP-RING PLIERS
2 - ACCESS HOLE

(6) Lift gear case up and off geartrain assembly (Fig. 144).

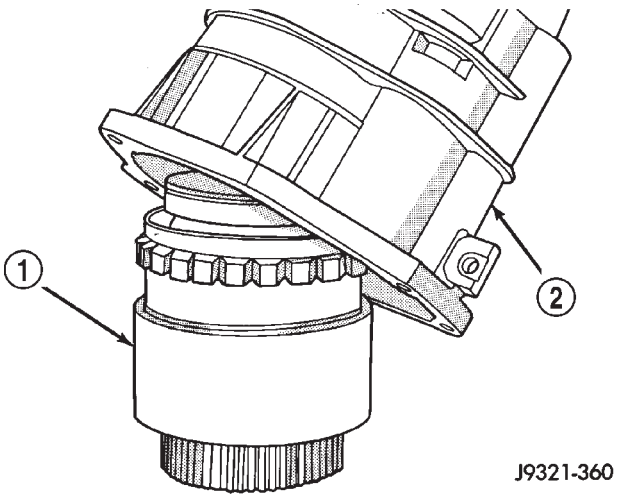

Fig. 144 Removing Gear Case From Geartrain Assembly

1 - GEARTRAIN ASSEMBLY
2 - GEAR CASE

(7) Remove snap-ring that retains rear bearing on output shaft.

(8) Remove rear bearing from output shaft (Fig. 145).

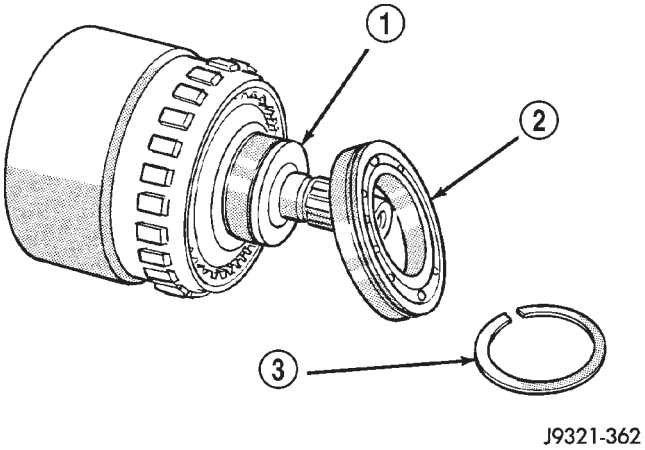

Fig. 145 Rear Bearing Removal

1 - OUTPUT SHAFT
2 - REAR BEARING
3 - SNAP-RING

DIRECT CLUTCH, HUB AND SPRING

WARNING: THE NEXT STEP IN DISASSEMBLY INVOLVES COMPRESSING THE DIRECT CLUTCH SPRING. IT IS EXTREMELY IMPORTANT THAT PROPER EQUIPMENT BE USED TO COMPRESS THE SPRING AS SPRING FORCE IS APPROXIMATELY 830 POUNDS. USE SPRING COMPRESSOR TOOL 6227-1 AND A HYDRAULIC SHOP PRESS WITH A MINIMUM RAM TRAVEL OF 5-6 INCHES. THE PRESS MUST ALSO HAVE A BED THAT CAN BE ADJUSTED UP OR DOWN AS REQUIRED. RELEASE CLUTCH SPRING TENSION SLOWLY AND COMPLETELY TO AVOID PERSONAL INJURY.

(1) Mount geartrain assembly in shop press (Fig. 146).

OVERDRIVE UNIT (Continued)

(2) Position Compressor Tool 6227-1 on clutch hub (Fig. 146). Support output shaft flange with steel press plates as shown and center assembly under press ram.

(3) Apply press pressure slowly. Compress hub and spring far enough to expose clutch hub retaining ring and relieve spring pressure on clutch pack snap-ring (Fig. 146).

(4) Remove direct clutch pack snap-ring (Fig. 147).

(5) Remove direct clutch hub retaining ring (Fig. 148).

(6) Release press load slowly and completely (Fig. 149).

(7) Remove Special Tool 6227-1. Then remove clutch pack from hub (Fig. 149).

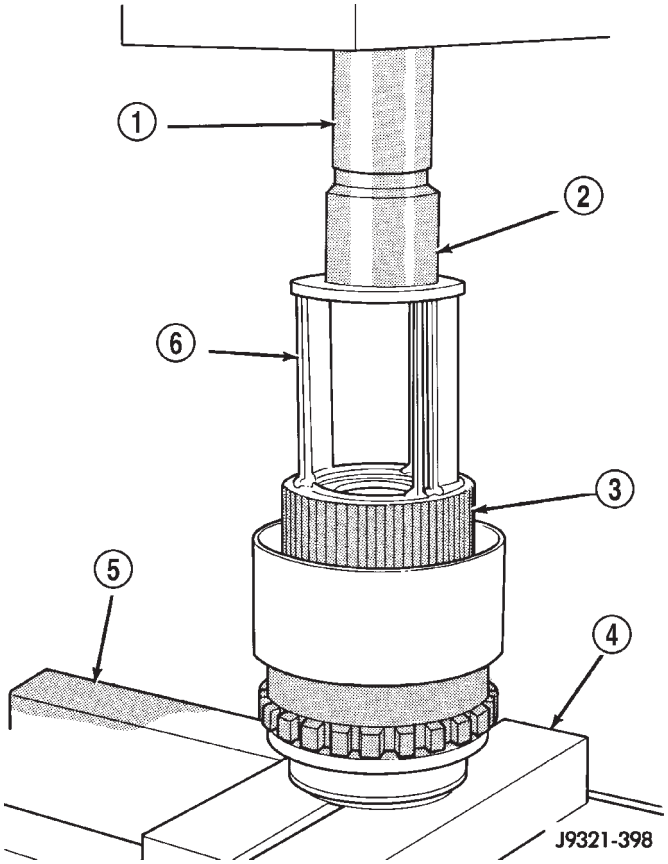

Fig. 146 Geartrain Mounted In Shop Press

1 - PRESS RAM
2 - SPECIAL TOOL C-3995-A (OR SIMILAR TOOL)
3 - CLUTCH HUB
4 - PLATES
5 - PRESS BED
6 - SPECIAL TOOL 6227-1

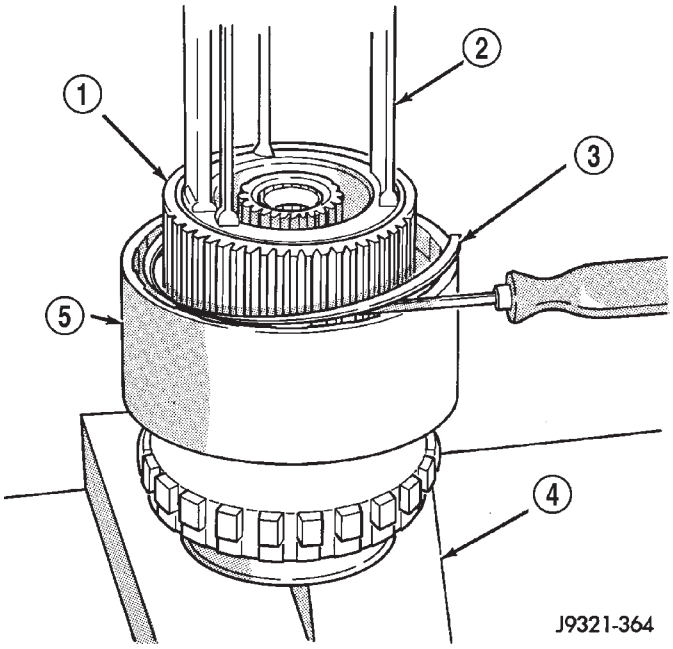

Fig. 147 Direct Clutch Pack Snap-Ring Removal

1 - CLUTCH HUB
2 - SPECIAL TOOL 6227-1
3 - DIRECT CLUTCH PACK SNAP-RING
4 - PRESS PLATES
5 - CLUTCH DRUM

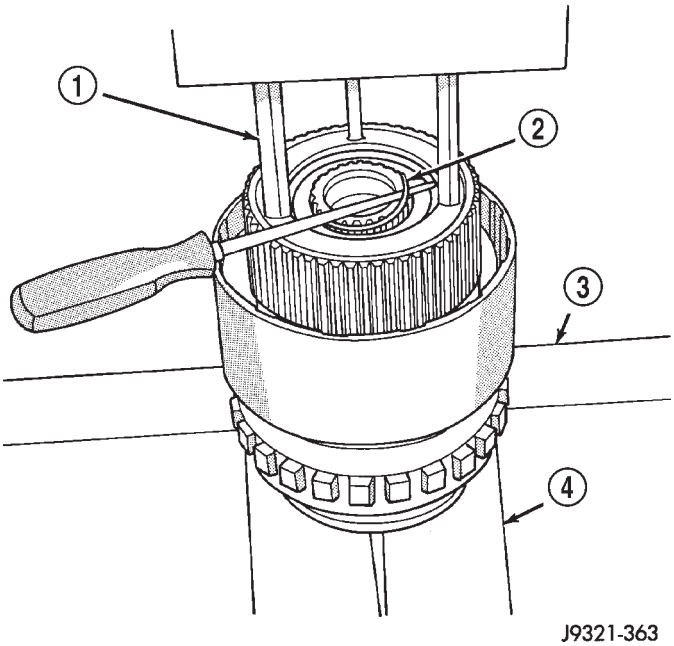

Fig. 148 Direct Clutch Hub Retaining Ring Removal

1 - SPECIAL TOOL 6227-1
2 - CLUTCH HUB RETAINING RING
3 - PRESS BED
4 - PRESS PLATES

OVERDRIVE UNIT (Continued)

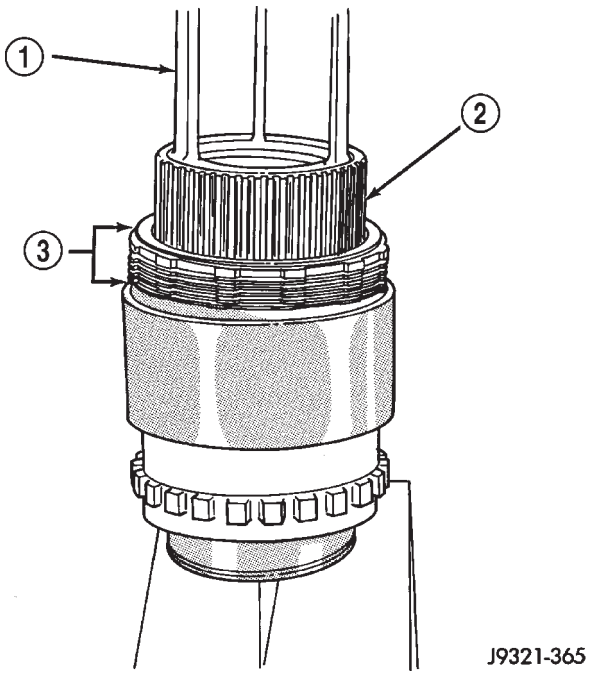

Fig. 149 Direct Clutch Pack Removal

1 - SPECIAL TOOL 6227-1
2 - DIRECT CLUTCH HUB
3 - DIRECT CLUTCH PACK

GEARTRAIN

(1) Remove direct clutch hub and spring (Fig. 150).

(2) Remove sun gear and spring plate. Then remove planetary thrust bearing and planetary gear (Fig. 151).

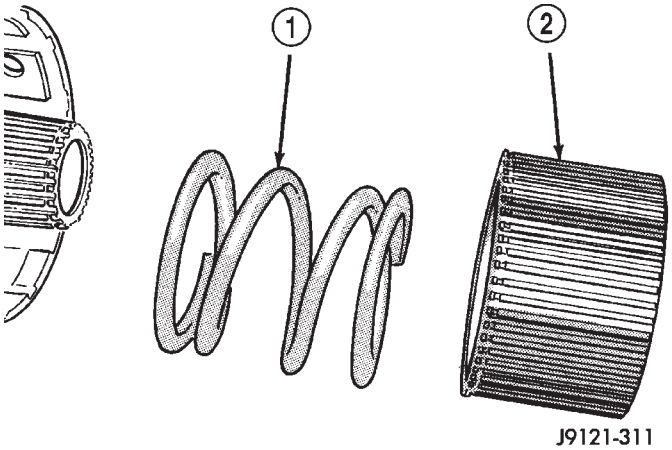

Fig. 150 Direct Clutch Hub And Spring Removal

1 - DIRECT CLUTCH SPRING
2 - DIRECT CLUTCH HUB

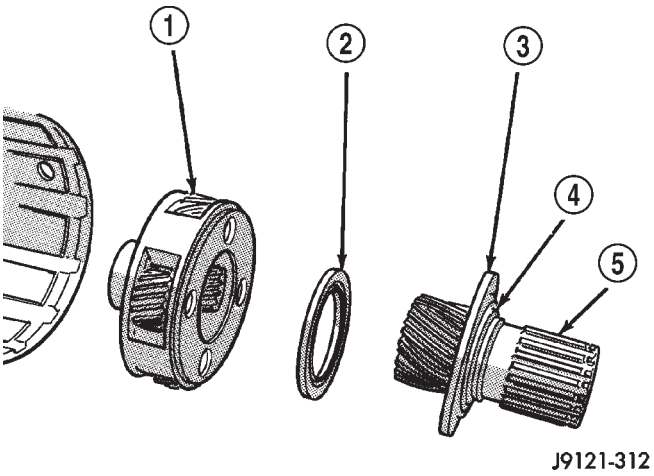

Fig. 151 Removing Sun Gear, Thrust Bearing And Planetary Gear

1 - PLANETARY GEAR
2 - PLANETARY THRUST BEARING
3 - CLUTCH SPRING PLATE
4 - SPRING PLATE SNAP-RING
5 - SUN GEAR

(3) Remove overrunning clutch assembly with expanding type snap-ring pliers (Fig. 152). Insert pliers into clutch hub. Expand pliers to grip hub splines and remove clutch with counterclockwise, twisting motion.

(4) Remove thrust bearing from overrunning clutch hub.

(5) Remove overrunning clutch from hub.

(6) Mark position of annulus gear and direct clutch drum for assembly alignment reference (Fig. 153). Use small center punch or scriber to make alignment marks.

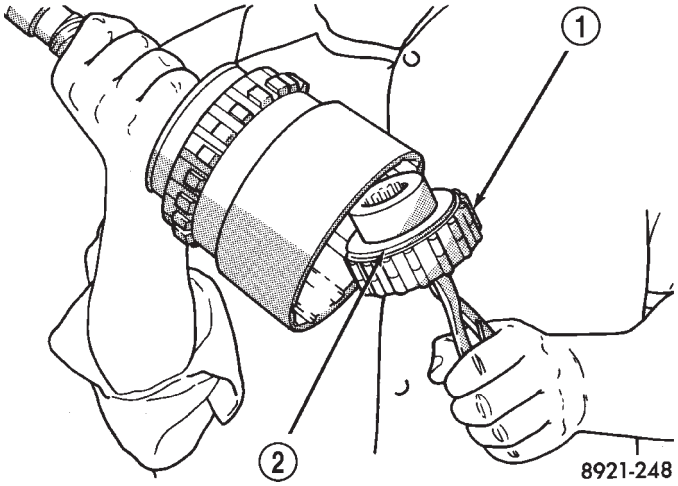

Fig. 152 Overrunning Clutch

1 - OVERRUNNING CLUTCH
2 - NEEDLE BEARING

OVERDRIVE UNIT (Continued)

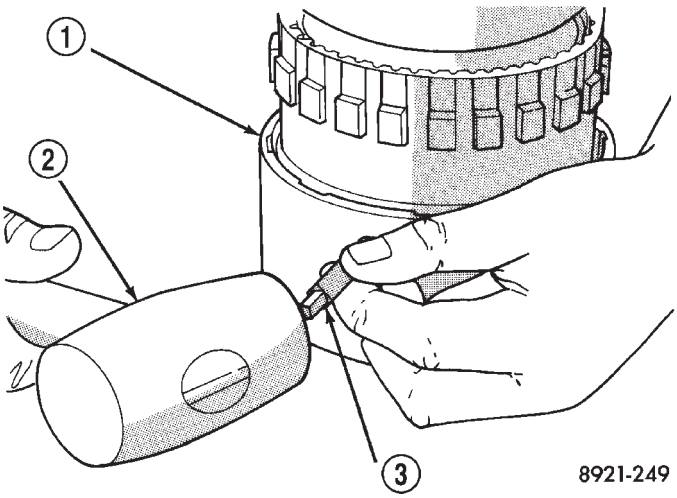

Fig. 153 Marking Direct Clutch Drum And Annulus Gear For Assembly Alignment

1 - DIRECT CLUTCH DRUM
2 - HAMMER
3 - PUNCH

(7) Remove direct clutch drum rear retaining ring (Fig. 154).

(8) Remove direct clutch drum outer retaining ring (Fig. 155).

(9) Mark annulus gear and output shaft for assembly alignment reference (Fig. 156). Use punch or scriber to mark gear and shaft.

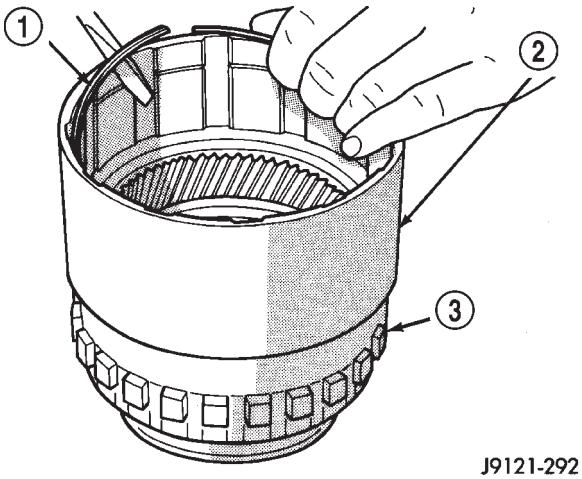

Fig. 154 Clutch Drum Inner Retaining Ring Removal

1 - INNER RETAINING RING
2 - DIRECT CLUTCH DRUM
3 - ANNULUS GEAR

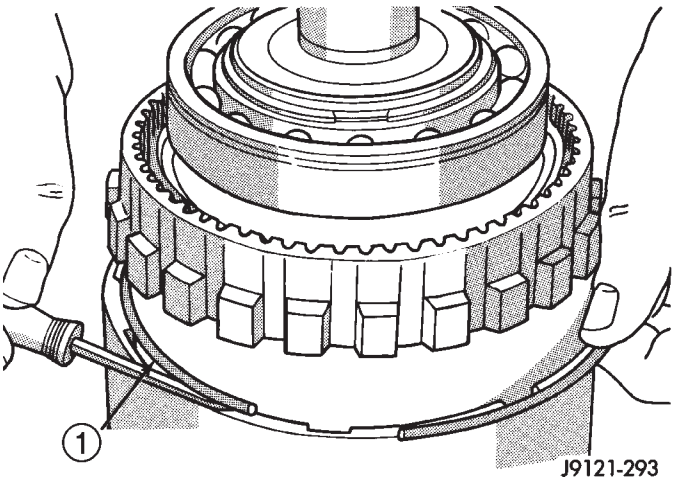

Fig. 155 Clutch Drum Outer Retaining Ring Removal

1 - OUTER RETAINING RING

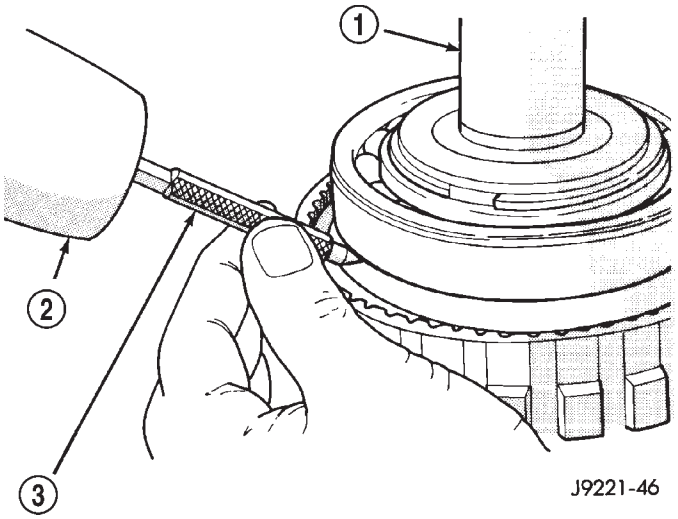

Fig. 156 Marking Annulus Gear And Output Shaft For Assembly Alignment

1 - OUTPUT SHAFT
2 - HAMMER
3 - PUNCH

OVERDRIVE UNIT (Continued)

(10) Remove snap-ring that secures annulus gear on output shaft (Fig. 157). Use two screwdrivers to unseat and work snap-ring out of groove as shown.

(11) Remove annulus gear from output shaft (Fig. 158). Use rawhide or plastic mallet to tap gear off shaft.

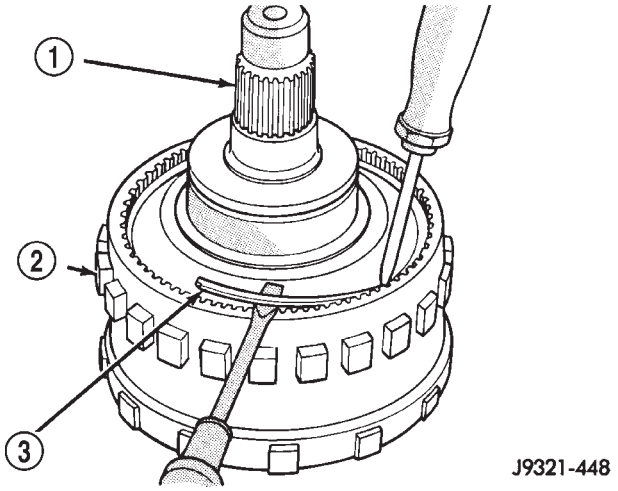

Fig. 157 Annulus Gear Snap-Ring Removal

1 - OUTPUT SHAFT
2 - ANNULUS GEAR
3 - SNAP-RING

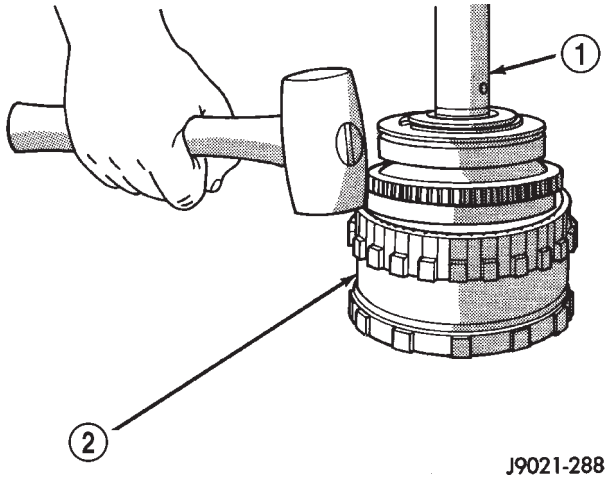

Fig. 158 Annulus Gear Removal

1 - OUTPUT SHAFT
2 - ANNULUS GEAR

GEAR CASE AND PARK LOCK

(1) Remove locating ring from gear case.

(2) Remove park pawl shaft retaining bolt and remove shaft, pawl and spring.

(3) Remove reaction plug snap-ring and remove reaction plug.

(4) Remove output shaft seal.

CLEANING

Clean the geartrain and case components with solvent. Dry all parts except the bearings with compressed air. Allow bearings to air dry.

Do not use shop towels for wiping parts dry unless the towels are made from a lint-free material. A sufficient quantity of lint (from shop towels, cloths, rags, etc.) could plug the transmission filter and fluid passages.

Discard the old case gasket and seals. Do not attempt to salvage these parts. They are not reusable. Replace any of the overdrive unit snap-rings if distorted or damaged.

Minor nicks or scratches on components can be smoothed with crocus cloth. However, do not attempt to reduce severe scoring on any components with abrasive materials. Replace severely scored components; do not try to salvage them.

INSPECTION

Check condition of the park lock components and the overdrive case.

Check the bushings in the overdrive case. Replace the bushings if severely scored or worn. Also replace the case seal if loose, distorted, or damaged.

Examine the overdrive and direct clutch discs and plates. Replace the discs if the facing is worn, severely scored, or burned and flaking off. Replace the clutch plates if worn, heavily scored, or cracked. Check the lugs on the clutch plates for wear. The plates should slide freely in the drum. Replace the plates or drum if binding occurs.

Check condition of the annulus gear, direct clutch hub, clutch drum and clutch spring. Replace the gear, hub and drum if worn or damaged. Replace the spring if collapsed, distorted, or cracked.

Be sure the splines and lugs on the gear, drum and hub are in good condition. The clutch plates and discs should slide freely in these components.

Inspect the thrust bearings and spring plate. Replace the plate if worn or scored. Replace the bearings if rough, noisy, brinnelled, or worn.

Inspect the planetary gear assembly and the sun gear and bushings. If either the sun gear or the bushings are damaged, replace the gear and bushings as an assembly. The gear and bushings are not serviced separately.

The planetary carrier and pinions must be in good condition. Also be sure the pinion pins are secure and in good condition. Replace the carrier if worn or damaged.

Inspect the overrunning clutch and race. The race surface should be smooth and free of scores. Replace the overrunning clutch assembly or the race if either assembly is worn or damaged in any way.

OVERDRIVE UNIT (Continued)

Replace the shaft pilot bushing and inner bushing if damaged. Replace either shaft bearing if rough or noisy. Replace the bearing snap-rings if distorted or cracked.

Check the machined surfaces on the output shaft. These surfaces should clean and smooth. Very minor nicks or scratches can be smoothed with crocus cloth. Replace the shaft if worn, scored or damaged in any way.

Inspect the output shaft bushings. The small bushing is the intermediate shaft pilot bushing. The large bushing is the overrunning clutch hub bushing. Replace either bushing if scored, pitted, cracked, or worn.

ASSEMBLY

GEARTRAIN AND DIRECT CLUTCH

(1) Soak direct clutch and overdrive clutch discs in Mopar® ATF +4, type 9602, transmission fluid. Allow discs to soak for 10-20 minutes.

(2) Install new pilot bushing and clutch hub bushing in output shaft if necessary (Fig. 159). Lubricate bushings with petroleum jelly, or transmission fluid.

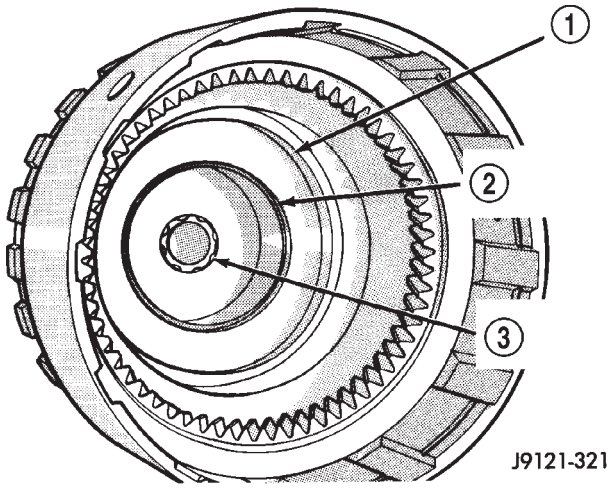

Fig. 159 Output Shaft Pilot Bushing

1 - OUTPUT SHAFT HUB
2 - OVERRUNNING CLUTCH HUB BUSHING
3 - INTERMEDIATE SHAFT PILOT BUSHING

(3) Install annulus gear on output shaft, if removed. Then install annulus gear retaining snap-ring (Fig. 160).

(4) Align and install clutch drum on annulus gear (Fig. 161). Be sure drum is engaged in annulus gear lugs.

(5) Install clutch drum outer retaining ring (Fig. 161).

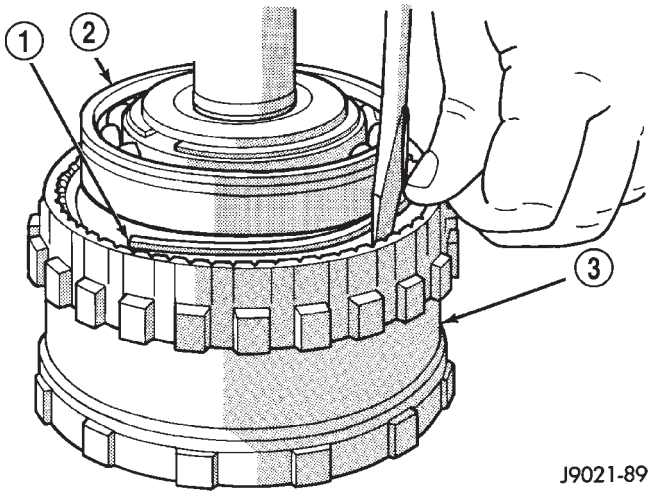

Fig. 160 Annulus Gear Installation

1 - SNAP-RING
2 - OUTPUT SHAFT FRONT BEARING
3 - ANNULUS GEAR

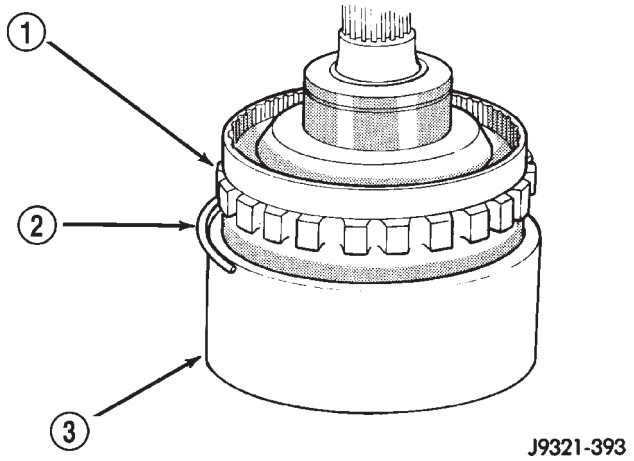

Fig. 161 Clutch Drum And Outer Retaining Ring Installation

1 - ANNULUS GEAR
2 - OUTER SNAP-RING
3 - CLUTCH DRUM

OVERDRIVE UNIT (Continued)

(6) Slide clutch drum forward and install inner retaining ring (Fig. 162).

(7) Install rear bearing and snap-ring on output shaft (Fig. 163). Be sure locating ring groove in bearing is toward rear.

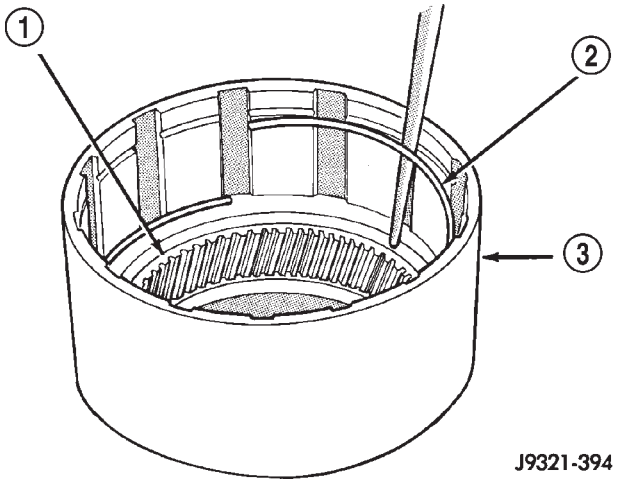

Fig. 162 Clutch Drum Inner Retaining Ring Installation

1 - ANNULUS GEAR
2 - INNER SNAP-RING
3 - CLUTCH DRUM

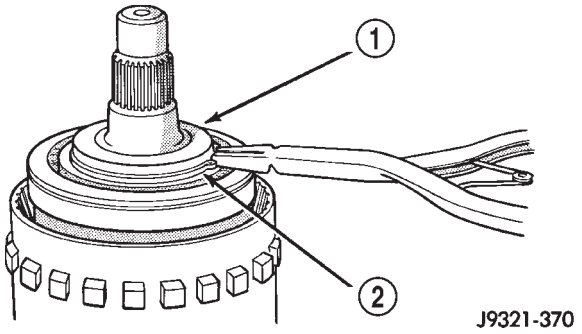

Fig. 163 Rear Bearing And Snap-Ring Installation

1 - REAR BEARING
2 - SNAP-RING

(8) Install overrunning clutch on hub (Fig. 164). Note that clutch only fits one-way. Shoulder on clutch should seat in small recess at edge of hub.

(9) Install thrust bearing on overrunning clutch hub. Use generous amount of petroleum jelly to hold bearing in place for installation. Bearing fits one-way only. Be sure bearing is seated squarely against hub. Reinstall bearing if it does not seat squarely.

(10) Install overrunning clutch in output shaft (Fig. 165). Insert snap-ring pliers in hub splines. Expand pliers to grip hub. Then install assembly with counterclockwise, twisting motion.

(11) Install planetary gear in annulus gear (Fig. 166). Be sure planetary pinions are fully seated in annulus gear before proceeding.

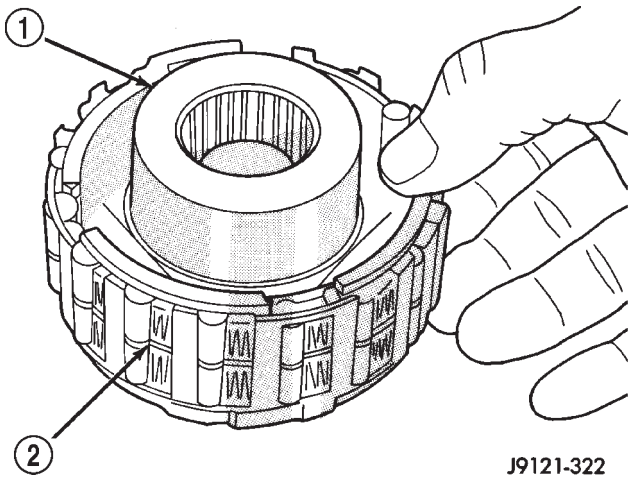

Fig. 164 Assembling Overrunning Clutch And Hub

1 - CLUTCH HUB
2 - OVERRUNNING CLUTCH

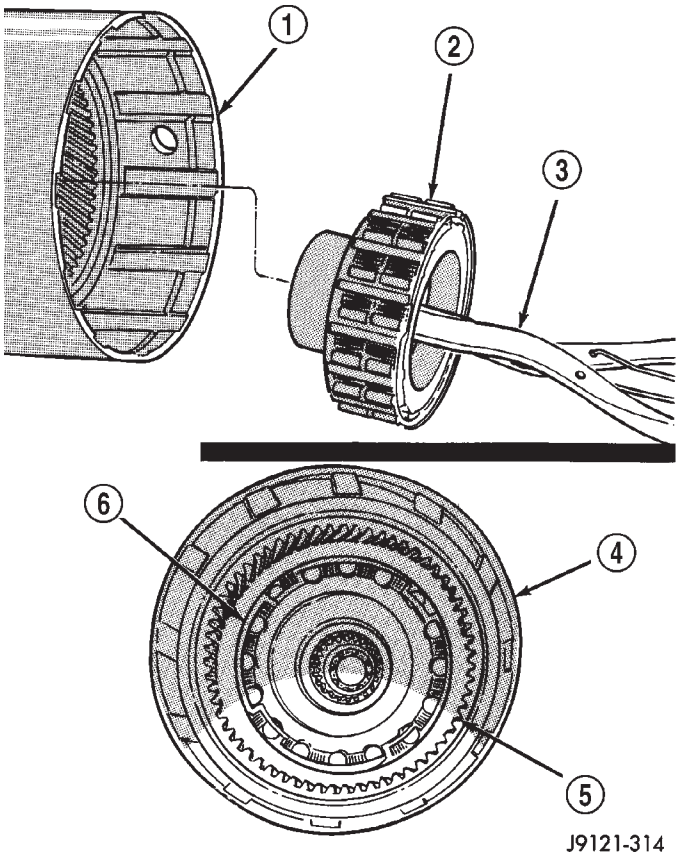

Fig. 165 Overrunning Clutch Installation

1 - CLUTCH DRUM
2 - OVERRUNNING CLUTCH ASSEMBLY
3 - EXPANDING-TYPE SNAP-RING PLIERS
4 - CLUTCH DRUM
5 - ANNULUS GEAR
6 - OVERRUNNING CLUTCH ASSEMBLY SEATED IN OUTPUT SHAFT

OVERDRIVE UNIT (Continued)

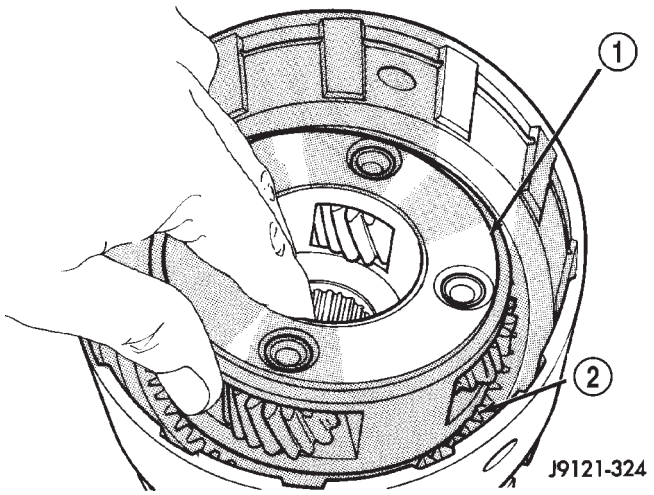

Fig. 166 Planetary Gear Installation

1 - PLANETARY GEAR
2 - ANNULUS GEAR

(12) Coat planetary thrust bearing and bearing contact surface of spring plate with generous amount of petroleum jelly. This will help hold bearing in place during installation.

(13) Install planetary thrust bearing on sun gear (Fig. 167). Slide bearing onto gear and seat it against spring plate as shown. Bearing fits one-way only. If it does not seat squarely against spring plate, remove and reposition bearing.

(14) Install assembled sun gear, spring plate and thrust bearing (Fig. 168). Be sure sun gear and thrust bearing are fully seated before proceeding.

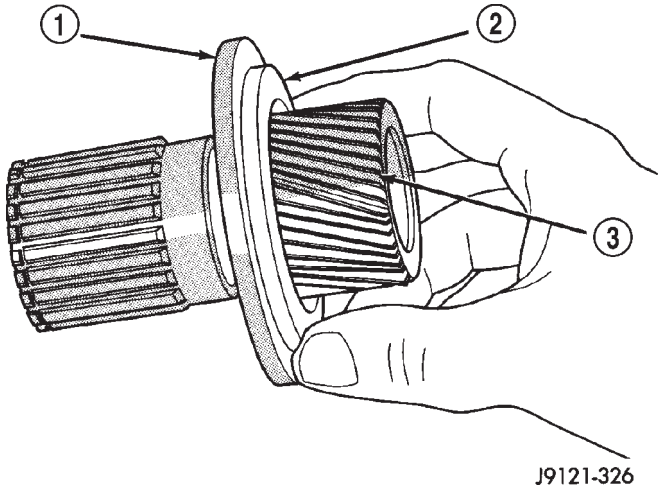

Fig. 167 Planetary Thrust Bearing Installation

1 - SPRING PLATE
2 - PLANETARY THRUST BEARING
3 - SUN GEAR

(15) Mount assembled output shaft, annulus gear, and clutch drum in shop press. Direct clutch spring, hub and clutch pack are easier to install with assembly mounted in press.

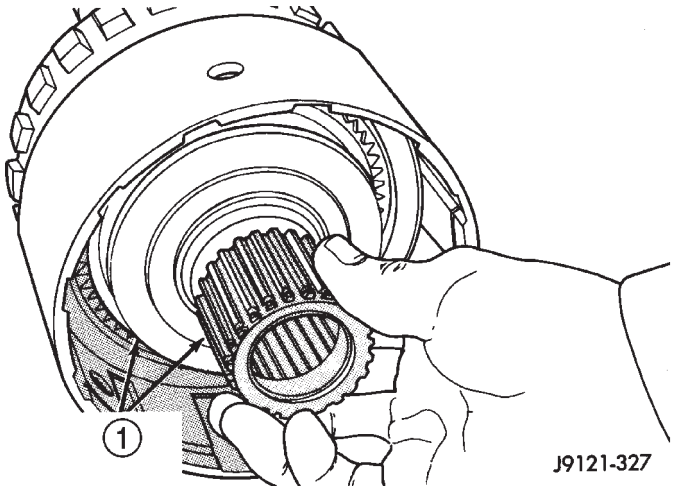

Fig. 168 Sun Gear Installation

1 - SUN GEAR AND SPRING PLATE ASSEMBLY

(16) Align splines in hubs of planetary gear and overrunning clutch with Alignment tool 6227-2 (Fig. 169). Insert tool through sun gear and into splines of both hubs. Be sure alignment tool is fully seated before proceeding.

(17) Install direct clutch spring (Fig. 170). Be sure spring is properly seated on spring plate.

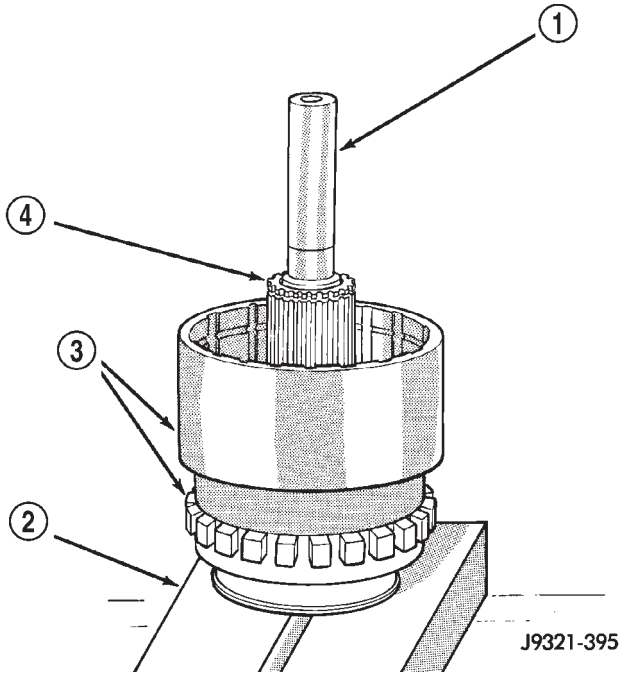

Fig. 169 Alignment Tool Installation

1 - SPECIAL TOOL 6227-2
2 - PRESS PLATES
3 - ASSEMBLED DRUM AND ANNULUS GEAR
4 - SUN GEAR

OVERDRIVE UNIT (Continued)

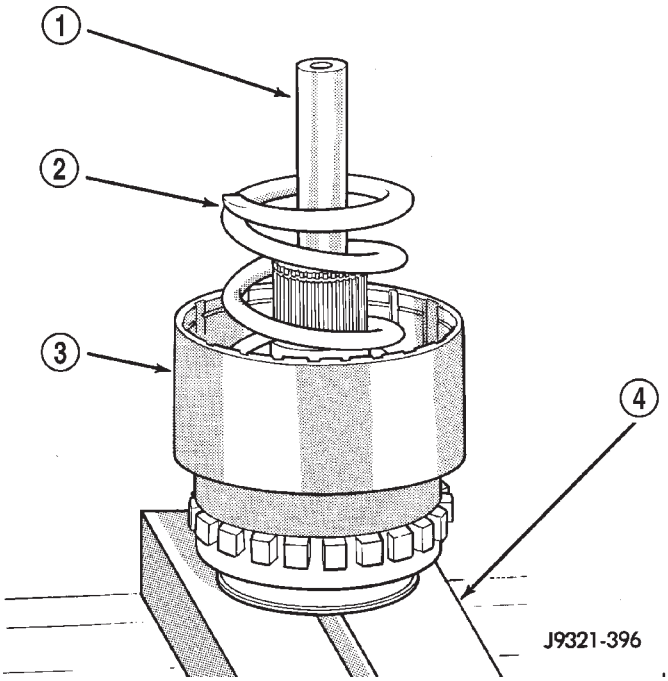

Fig. 170 Direct Clutch Spring Installation

1 - SPECIAL TOOL 6227-2
2 - DIRECT CLUTCH SPRING
3 - CLUTCH HUB
4 - PRESS PLATES

NOTE: The 42RE transmission has 6 direct clutch discs and 5 clutch plates.

(18) Assemble and install direct clutch pack on hub as follows:

(a) Assemble clutch pack components (Fig. 171).

(b) Install direct clutch reaction plate on clutch hub first. Note that one side of reaction plate is counterbored. Be sure this side faces rearward. Splines at rear of hub are raised slightly. Counterbore in plate fits over raised splines. Plate should be flush with this end of hub (Fig. 172).

(c) Install first clutch disc followed by a steel plate until all discs and plates have been installed.

(d) Install pressure plate. This is last clutch pack item to be installed. Be sure plate is installed with shoulder side facing upward (Fig. 173).

(19) Install clutch hub and clutch pack on direct clutch spring (Fig. 174). Be sure hub is started on sun gear splines before proceeding.

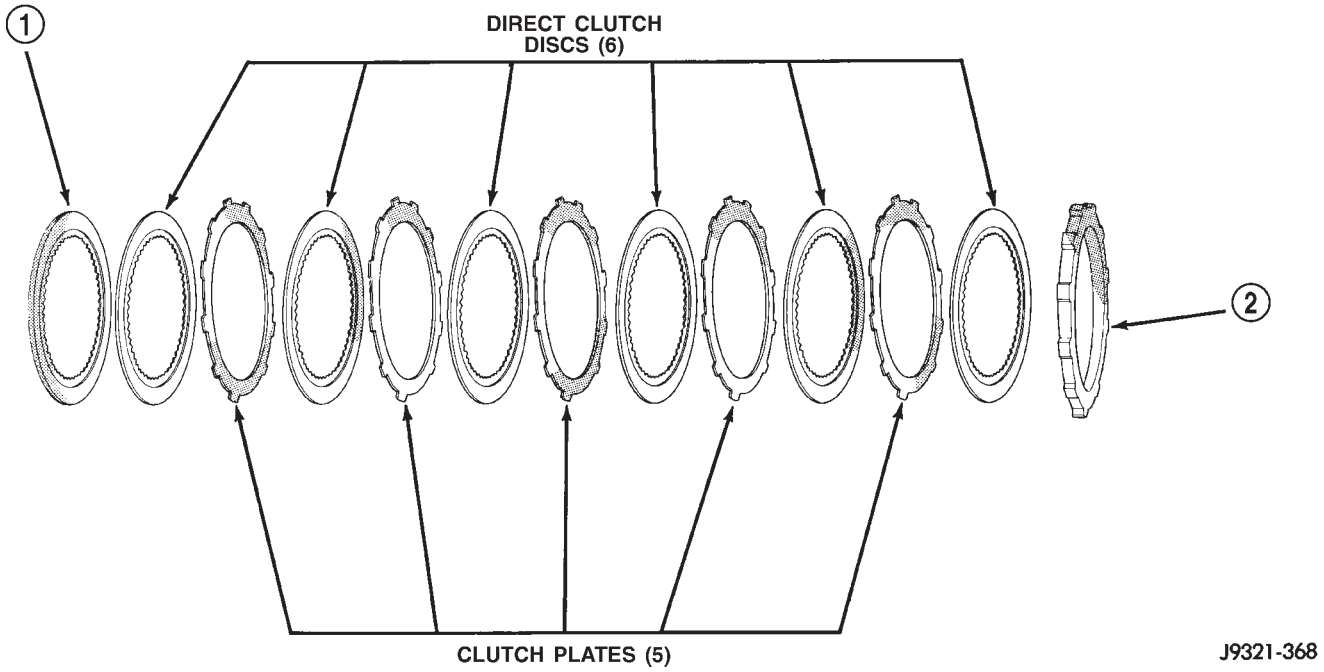

Fig. 171 42RE Direct Clutch Pack Components

1 - REACTION PLATE
2 - PRESSURE PLATE

OVERDRIVE UNIT (Continued)

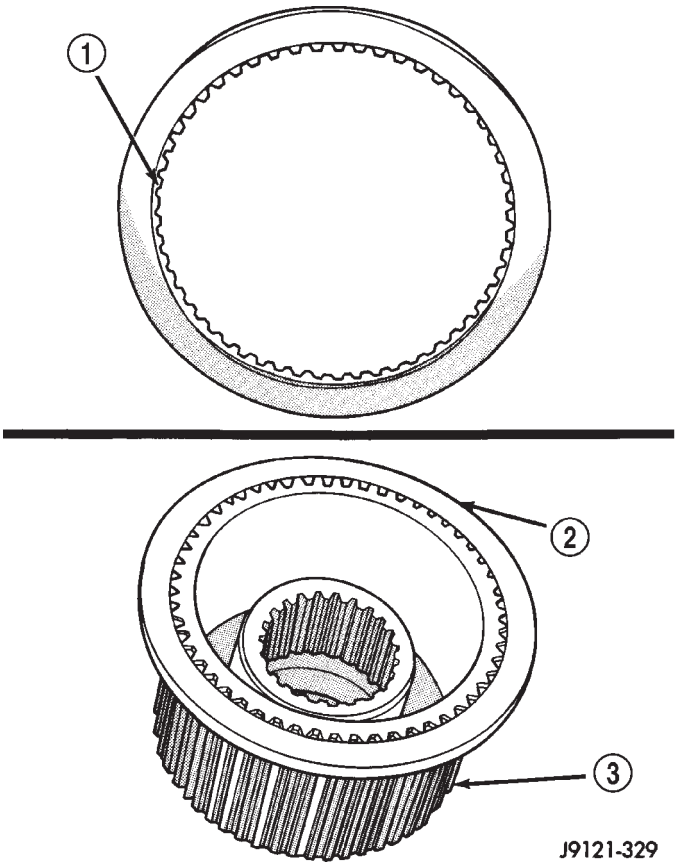

Fig. 172 Correct Position Of Direct Clutch Reaction Plate

1 - REACTION PLATE COUNTERBORE
2 - DIRECT CLUTCH REACTION PLATE (FLUSH WITH END OF HUB)
3 - CLUTCH HUB

WARNING: THE NEXT STEP IN GEARTRAIN ASSEMBLY INVOLVES COMPRESSING THE DIRECT CLUTCH HUB AND SPRING. IT IS EXTREMELY IMPORTANT THAT PROPER EQUIPMENT BE USED TO COMPRESS THE SPRING AS SPRING FORCE IS APPROXIMATELY 830 POUNDS. USE COMPRESSOR TOOL C-6227-1 AND A HYDRAULIC-TYPE SHOP PRESS WITH A MINIMUM RAM TRAVEL OF 6 INCHES. THE PRESS MUST ALSO HAVE A BED THAT CAN BE ADJUSTED UP OR DOWN AS REQUIRED. RELEASE CLUTCH SPRING TENSION SLOWLY AND COMPLETELY TO AVOID PERSONAL INJURY.

(20) Position Compressor Tool 6227-1 on clutch hub.

(21) Compress clutch hub and spring just enough to place tension on hub and hold it in place.

(22) Slowly compress clutch hub and spring. Compress spring and hub only enough to expose ring grooves for clutch pack snap ring and clutch hub retaining ring.

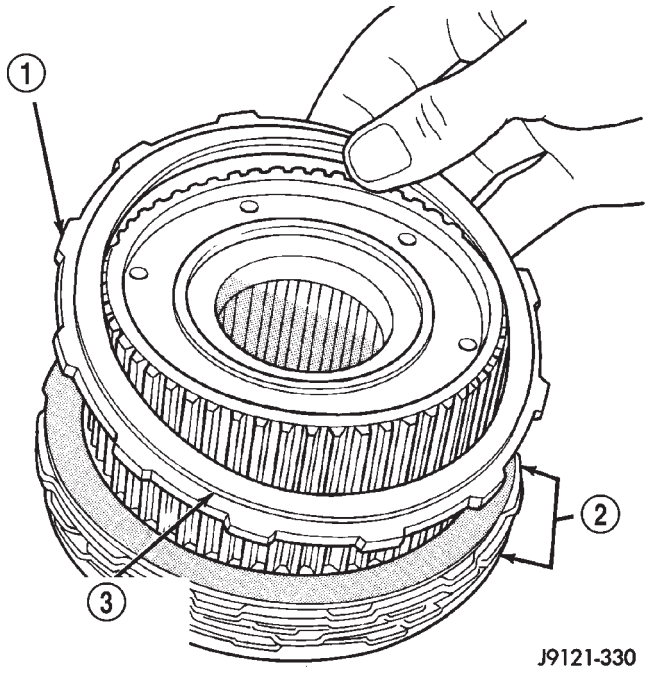

Fig. 173 Correct Position Of Direct Clutch Pressure Plate

1 - DIRECT CLUTCH PRESSURE PLATE
2 - CLUTCH PACK
3 - BE SURE SHOULDER SIDE OF PLATE FACES UPWARD

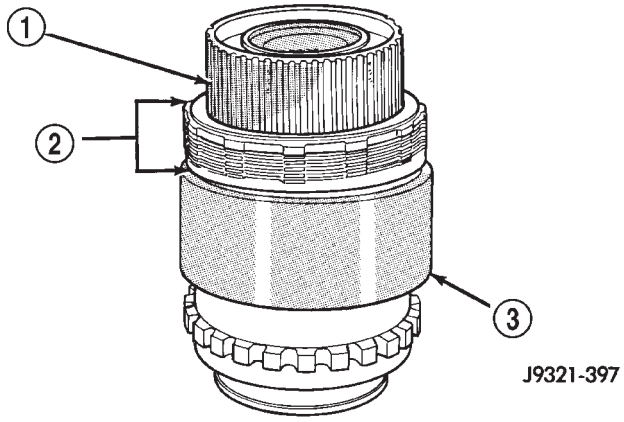

Fig. 174 Direct Clutch

1 - CLUTCH HUB
2 - DIRECT CLUTCH PACK
3 - CLUTCH DRUM

(23) Realign clutch pack on hub and seat clutch discs and plates in clutch drum.

(24) Install direct clutch pack snap-ring (Fig. 175). Be very sure snap-ring is fully seated in clutch drum ring groove.

OVERDRIVE UNIT (Continued)

(25) Install clutch hub retaining ring (Fig. 176). Be very sure retaining ring is fully seated in sun gear ring groove.

(26) Slowly release press ram, remove compressor tools and remove geartrain assembly.

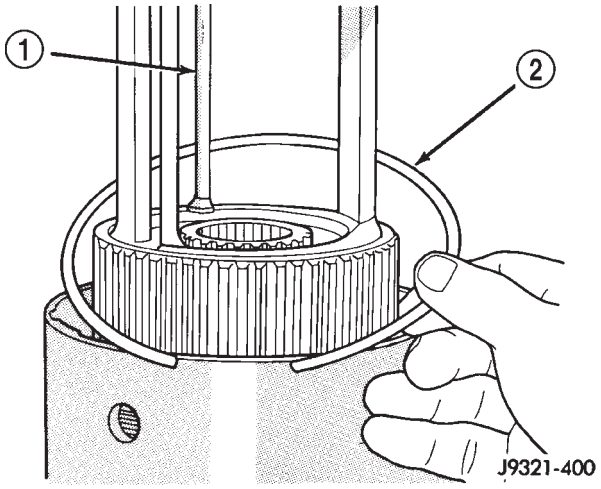

Fig. 175 Direct Clutch Pack Snap-Ring Installation

1 - SPECIAL TOOL 6227-1
2 - DIRECT CLUTCH PACK SNAP-RING

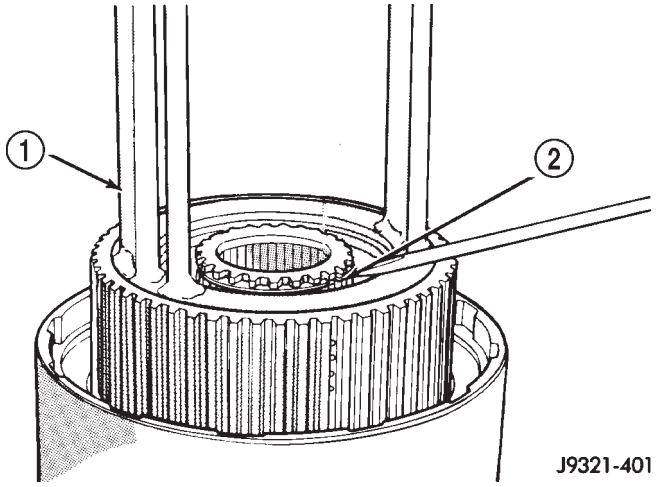

Fig. 176 Clutch Hub Retaining Ring Installation

1 - SPECIAL TOOL 6227-1
2 - CLUTCH HUB RETAINING RING

GEAR CASE

(1) Position park pawl and spring in case and install park pawl shaft. Verify that end of spring with 90° bend is hooked to pawl and straight end of spring is seated against case.

(2) Install pawl shaft retaining bolt. Tighten bolt to 27 N·m (20 ft. lbs.) torque.

(3) Install park lock reaction plug. Note that plug has locating pin at rear (Fig. 177). Be sure pin is seated in hole in case before installing snap-ring.

(4) Install reaction plug snap-ring (Fig. 178). Compress snap ring only enough for installation; do not distort it.

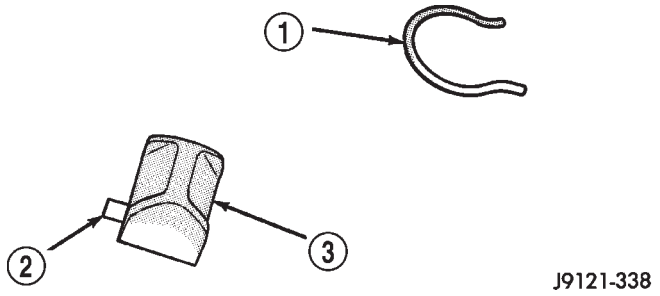

Fig. 177 Reaction Plug Locating Pin And Snap-Ring

1 - REACTION PLUG SNAP-RING (DO NOT OVERCOMPRESS TO INSTALL)
2 - LOCATING PIN
3 - PARK LOCK REACTION PLUG

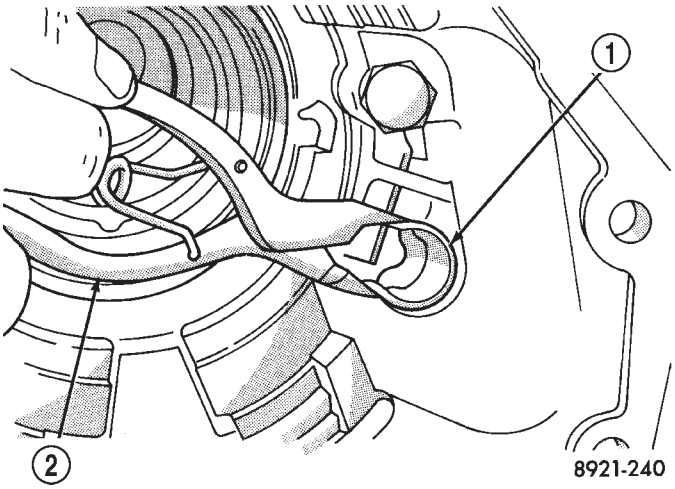

Fig. 178 Reaction Plug And Snap-Ring Installation

1 - REACTION PLUG SNAP-RING
2 - SNAP-RING PLIERS

(5) Install new seal in gear case. On 4x4 gear case, use Tool Handle C-4171 and Installer C-3860-A to seat seal in case. On 4 x 2 gear case, use same Handle C-4171 and Installer C-3995-A to seat seal in case.

OVERDRIVE UNIT (Continued)

(6) Verify that tab ends of rear bearing locating ring extend into access hole in gear case (Fig. 179).

(7) Support geartrain on Tool 6227-1 (Fig. 180). Be sure tool is securely seated in clutch hub.

(8) Install overdrive gear case on geartrain (Fig. 180).

(9) Expand front bearing locating ring with snap-ring pliers (Fig. 181). Then slide case downward until locating ring locks in bearing groove and release snap-ring.

(10) Install locating ring access cover and gasket in overdrive unit case (Fig. 182).

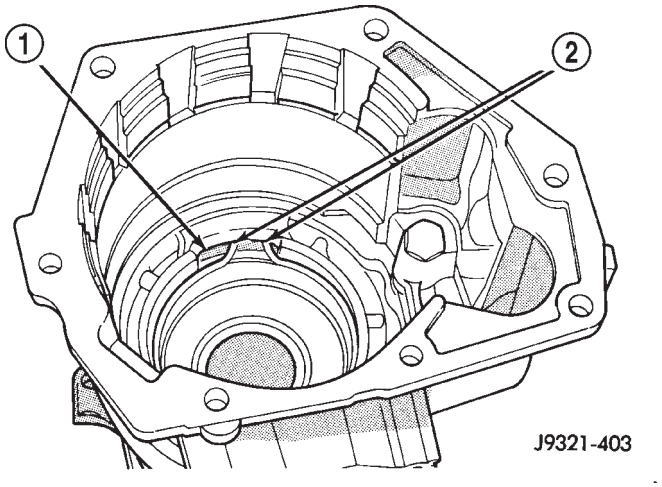

Fig. 179 Correct Rear Bearing Locating Ring Position

1 - CASE ACCESS HOLE
2 - TAB ENDS OF LOCATING RING

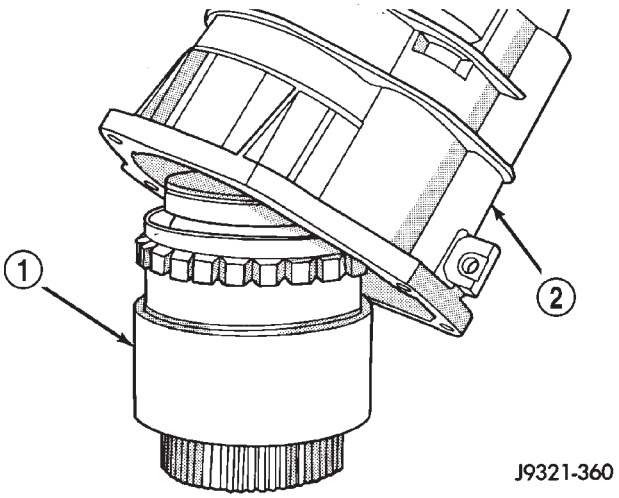

Fig. 180 Overdrive Gear Case Installation

1 - GEARTRAIN ASSEMBLY
2 - GEAR CASE

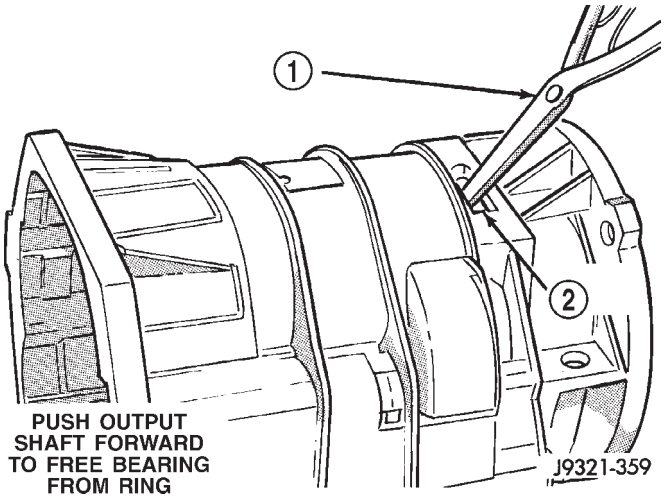

Fig. 181 Seating Locating Ring In Rear Bearing

1 - EXPAND BEARING LOCATING RING WITH SNAP-RING PLIERS
2 - ACCESS HOLE

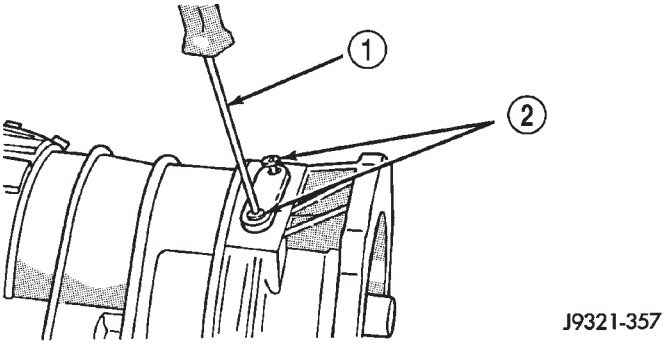

Fig. 182 Locating Ring Access Cover And Gasket Installation

1 - TORX SCREWDRIVER (T25)
2 - ACCESS COVER SCREWS

OVERDRIVE UNIT (Continued)

OVERDRIVE CLUTCH

(1) Install overdrive clutch reaction ring first. Reaction ring is flat with notched ends (Fig. 183).

(2) Install wave spring on top of reaction ring (Fig. 184). Reaction ring and wave ring both fit in same ring groove. Use screwdriver to seat each ring securely in groove. Also ensure that the ends of the two rings are offset from each other.

NOTE: The 42RE transmission has 3 overdrive clutch discs and 2 plates.

(3) Assemble overdrive clutch pack (Fig. 185).

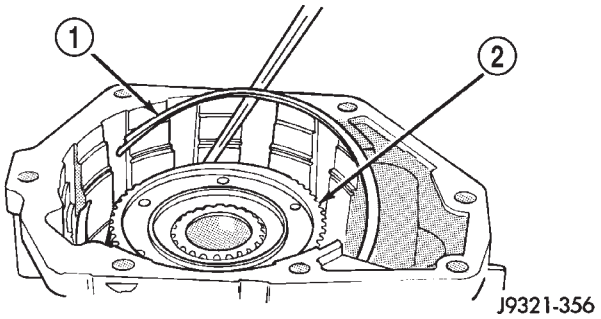

Fig. 183 Overdrive Clutch Reaction Ring Installation

1 - REACTION RING
2 - CLUTCH HUB

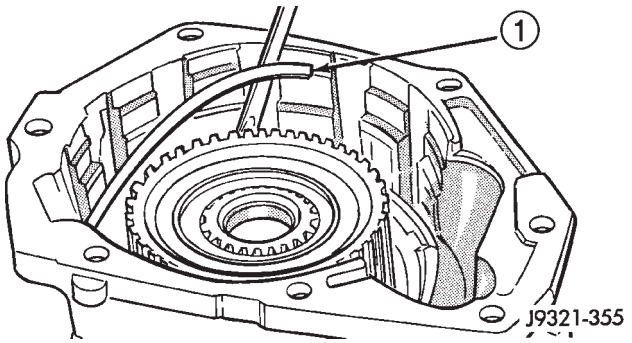

Fig. 184 Overdrive Clutch Wave Spring Installation

1 - WAVE SPRING

(4) Install overdrive clutch reaction plate first.

(5) Install first clutch disc followed by first clutch plate. Then install remaining clutch discs and plates in same order.

(6) Install clutch pack pressure plate.

(7) Install clutch pack wire-type retaining ring (Fig. 186).

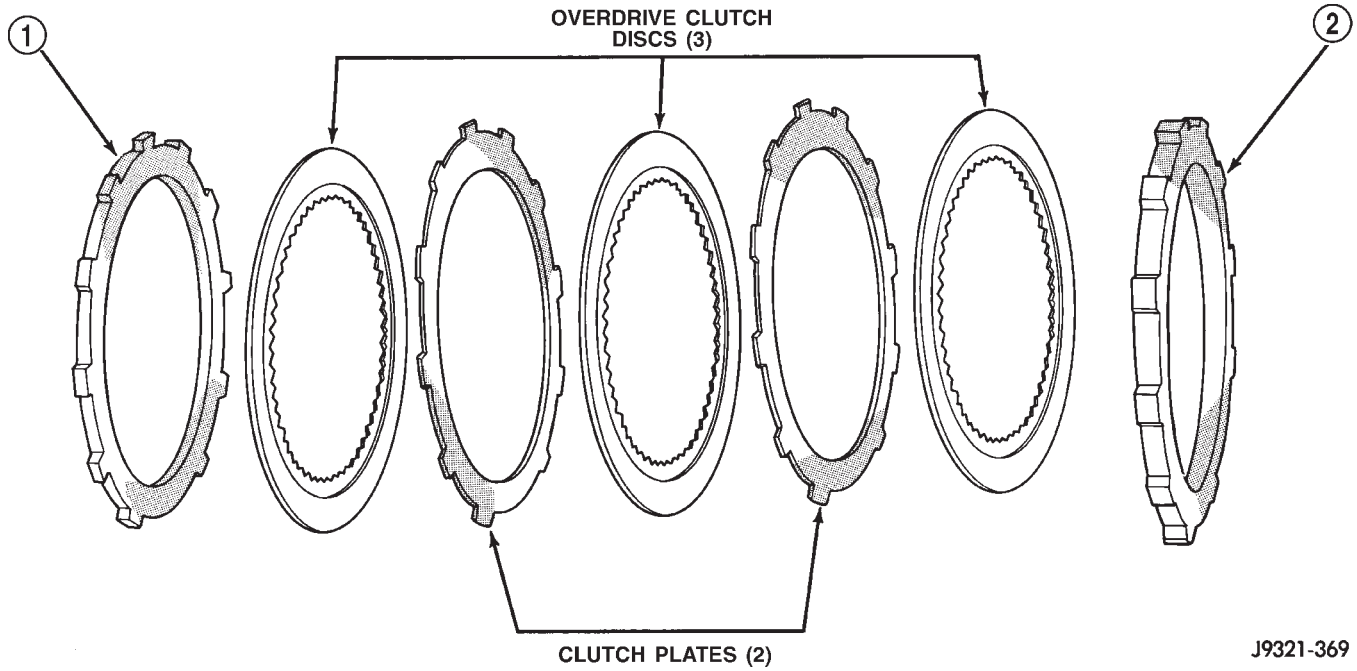

Fig. 185 42RE Overdrive Clutch Components

1 - REACTION PLATE
2 - PRESSURE PLATE

OVERDRIVE UNIT (Continued)

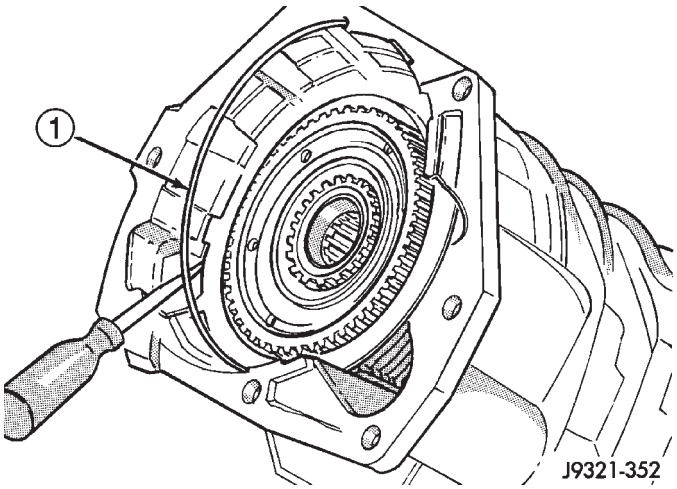

Fig. 186 Overdrive Clutch Pack Retaining Ring Installation

1 - OVERDRIVE CLUTCH PACK RETAINING RING

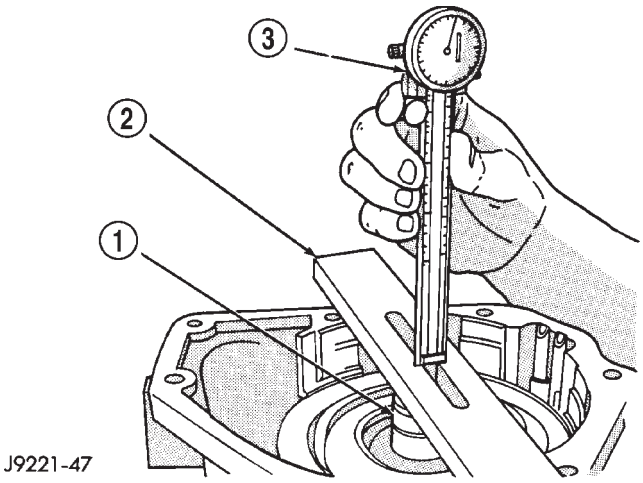

Fig. 187 Shaft End Play Measurement

1 - SPECIAL TOOL 6312
2 - SPECIAL TOOL 6311
3 - SPECIAL TOOL C-4962

INTERMEDIATE SHAFT SPACER SELECTION

(1) Place overdrive unit in vertical position. Mount it on blocks, or in workbench with appropriate size mounting hole cut into it. Be sure unit is facing upward for access to direct clutch hub. Also be sure output shaft is not loaded and internal components are moved rearward for accurate measurement.

(2) Determine correct thickness intermediate shaft spacer as follows:

(a) Insert Special Tool 6312 through sun gear, planetary gear and into pilot bushing in output shaft. Be sure tool bottoms against planetary shoulder.

(b) Position Gauge Tool 6311 across face of overdrive case (Fig. 187). Then position Dial Caliper C-4962 over gauge tool.

(c) Extend sliding scale of dial caliper downward through gauge tool slot until scale contacts end of Gauge Alignment Tool 6312. Lock scale in place. Remove dial caliper tool and note distance measured (Fig. 187).

(d) Select proper thickness end play spacer from spacer chart based on distance measured (Fig. 188).

(e) Remove Gauge Alignment Tool 6312.

OD THRUST PLATE SELECTION

(1) Place overdrive unit in vertical position. Mount it on blocks, or in workbench with appropriate size mounting hole cut into it. Be sure unit is facing upward for access to direct clutch hub. Also be sure output shaft is not loaded and internal components are moved rearward for accurate measurement.

(2) Determine correct thickness overdrive piston thrust plate as follows:

End Play Measurement (Inches)	Spacer Thickness (Inches)
.7336 - .7505	.158 - .159
.7506 - .7675	.175 - .176
.7676 - .7855	.193 - .194
.7856 - .8011	.211 - .212

J9121-341

Fig. 188 Intermediate Shaft End Play Spacer Selection

(a) Position Gauge Tool 6311 across face of overdrive case. Then position Dial Caliper C-4962 over gauge tool (Fig. 189).

(b) Measure distance to clutch hub thrust bearing seat at four points 90° apart. Then average measurements by adding them and dividing by 4.

(c) Select and install required thrust plate from information in thrust plate chart (Fig. 190).

(3) Leave Alignment Tool 6227-2 in place. Tool will keep planetary and clutch hub splines in alignment until overdrive unit is ready for installation on transmission.

(4) Transmission speed sensor can be installed at this time if desired. However, it is recommended that sensor not be installed until after overdrive unit is secured to transmission.

OVERDRIVE PISTON

(1) Install new seals on over drive piston.

(2) Stand transmission case upright on bellhousing.

OVERDRIVE UNIT (Continued)

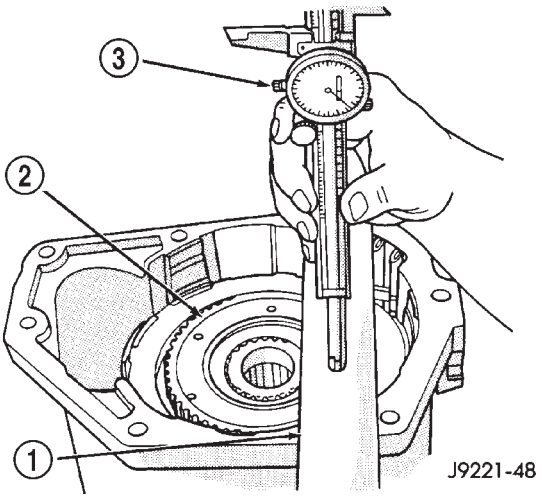

Fig. 189 Overdrive Piston Thrust Plate Measurement

1 - SPECIAL TOOL 6311
2 - DIRECT CLUTCH HUB THRUST BEARING SEAT
3 - SPECIAL TOOL C-4962

End Play Measurement (Inches)	Spacer Thickness (Inches)
1.7500 - 1.7649	.108 - .110
1.7650 - 1.7799	.123 - .125
1.7800 - 1.7949	.138 - .140
1.7950 - 1.8099	.153 - .155
1.8100 - 1.8249	.168 - .170
1.8250 - 1.8399	.183 - .185
1.8400 - 1.8549	.198 - .200
1.8550 - 1.8699	.213 - .215
1.8700 - 1.8849	.228 - .230
1.8850 - 1.8999	.243 - .245

J9121-342

Fig. 190 Overdrive Piston Thrust Plate Selection

(3) Position Guide Ring 8114-1 on outer edge of overdrive piston retainer.

(4) Position Seal Guide 8114-2 on inner edge of overdrive piston retainer.

(5) Install overdrive piston in overdrive piston retainer by: aligning locating lugs on overdrive piston to the two mating holes in retainer.

(a) Aligning locating lugs on overdrive piston to the two mating holes in retainer.

(b) Lubricate overdrive piston seals with Mopar® Door Ease, or equivalent.

(c) Install piston over Seal Guide 8114-2 and inside Guide Ring 8114-1.

(d) Push overdrive piston into position in retainer.

(e) Verify that the locating lugs entered the lug bores in the retainer.

(6) Install intermediate shaft spacer on intermediate shaft.

(7) Install overdrive piston thrust plate on overdrive piston.

(8) Install overdrive piston thrust bearing on overdrive piston.

(9) Install transmission speed sensor and O-ring seal in overdrive case (Fig. 131).

INSTALLATION

(1) Be sure overdrive unit Alignment Tool 6227-2 is fully seated before moving unit. If tool is not seated and gear splines rotate out of alignment, overdrive unit will have to be disassembled in order to realign splines.

(2) If overdrive piston retainer was not removed during service and original case gasket is no longer reusable, prepare new gasket by trimming it.

(3) Cut out old case gasket around piston retainer with razor knife (Fig. 191).

(4) Use old gasket as template and trim new gasket to fit.

(5) Position new gasket over piston retainer and on transmission case. Use petroleum jelly to hold gasket in place if necessary. Do not use any type of sealer to secure gasket. Use petroleum jelly only.

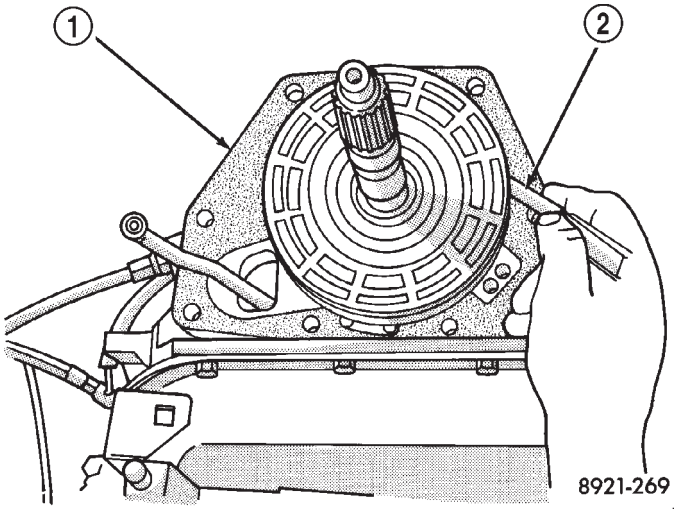

Fig. 191 Trimming Overdrive Case Gasket

1 - GASKET
2 - SHARP KNIFE

(6) Install selective spacer on intermediate shaft, if removed. Spacer goes in groove just rearward of shaft rear splines (Fig. 192).

(7) Install thrust bearing in overdrive unit sliding hub. Use petroleum jelly to hold bearing in position.

CAUTION: Be sure the shoulder on the inside diameter of the bearing is facing forward.

OVERDRIVE UNIT (Continued)

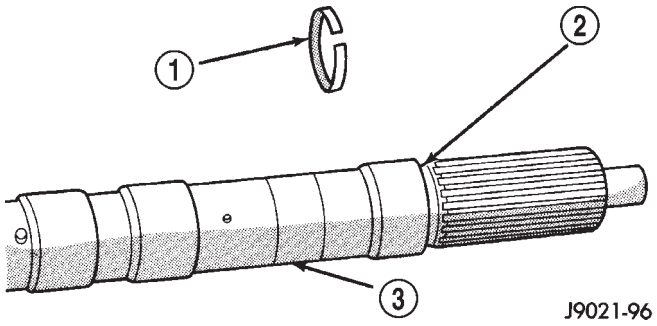

Fig. 192 Intermediate Shaft Selective Spacer Location

1 - SELECTIVE SPACER
2 - SPACER GROOVE
3 - INTERMEDIATE SHAFT

(8) Verify that splines in overdrive planetary gear and overrunning clutch hub are aligned with Alignment Tool 6227-2. Overdrive unit cannot be installed if splines are not aligned. If splines have rotated out of alignment, unit will have to be disassembled to realign splines.

(9) Carefully slide Alignment Tool 6227-2 out of overdrive planetary gear and overrunning clutch splines.

(10) Raise overdrive unit and carefully slide it straight onto intermediate shaft. Insert park rod into park lock reaction plug at same time. Avoid tilting overdrive during installation as this could cause planetary gear and overrunning clutch splines to rotate out of alignment. If this occurs, it will be necessary to remove and disassemble overdrive unit to realign splines.

(11) Work overdrive unit forward on intermediate shaft until seated against transmission case.

(12) Install bolts attaching overdrive unit to transmission unit. Tighten bolts in diagonal pattern to 34 N·m (25 ft-lbs).

(13) Connect the transmission speed sensor and overdrive wiring connectors.

(14) Install the transfer case, if equipped.

(15) Align and install rear propeller shaft, if necessary. (Refer to 3 - DIFFERENTIAL & DRIVELINE/PROPELLER SHAFT/PROPELLER SHAFT - INSTALLATION)

OVERRUNNING CLUTCH CAM/OVERDRIVE PISTON RETAINER

DESCRIPTION

The overrunning clutch (Fig. 193) consists of an inner race, an outer race (or cam), rollers and springs, and the spring retainer. The number of rollers and springs depends on what transmission and which overrunning clutch is being dealt with.

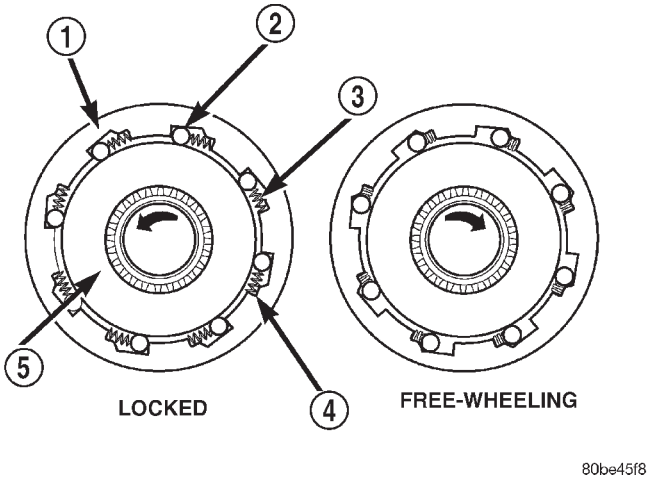

Fig. 193 Overrunning Clutch

1 - OUTER RACE (CAM)
2 - ROLLER
3 - SPRING
4 - SPRING RETAINER
5 - INNER RACE (HUB)

OPERATION

As the inner race is rotated in a clockwise direction (as viewed from the front of the transmission), the race causes the rollers to roll toward the springs, causing them to compress against their retainer. The compression of the springs increases the clearance between the rollers and cam. This increased clearance between the rollers and cam results in a free-wheeling condition. When the inner race attempts to rotate counterclockwise, the action causes the rollers to roll in the same direction as the race, aided by the pushing of the springs. As the rollers try to move in the same direction as the inner race, they are wedged between the inner and outer races due to the design of the cam. In this condition, the clutch is locked and acts as one unit.

DISASSEMBLY

NOTE: To service the overrunning clutch cam and the overdrive piston retainer, the transmission geartrain and the overdrive unit must be removed from the transmission.

OVERRUNNING CLUTCH CAM/OVERDRIVE PISTON RETAINER (Continued)

(1) Remove the overdrive piston (Fig. 194).
(2) Remove the overdrive piston retainer bolts.
(3) Remove overdrive piston retainer.
(4) Remove case gasket.
(5) Mark the position of the overrunning clutch cam in the case (Fig. 195).
(6) Remove the overrunning clutch cam bolts.
(7) Remove the overrunning clutch cam.

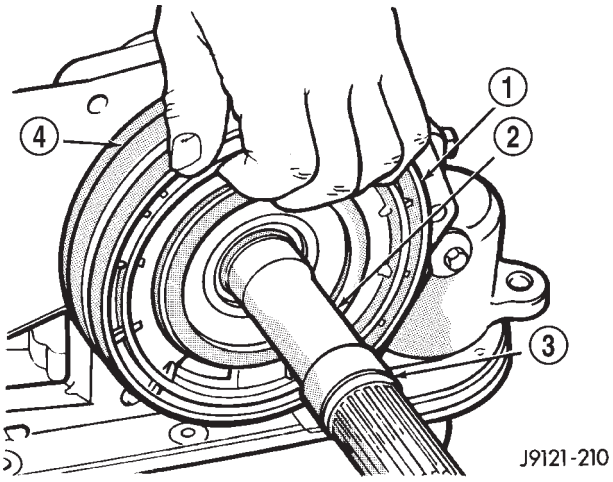

Fig. 194 Overdrive Piston Removal

1 - OVERDRIVE CLUTCH PISTON
2 - INTERMEDIATE SHAFT
3 - SELECTIVE SPACER
4 - PISTON RETAINER

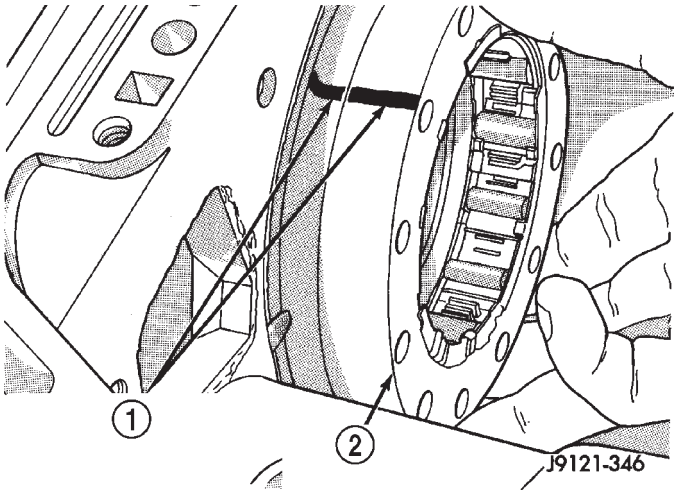

Fig. 195 Overrunning Clutch Cam Removal

1 - ALIGN MARKS IDENTIFYING NON-THREADED HOLE IN CAM AND CASE
2 - OVERRUNNING CLUTCH ASSEMBLY

CLEANING

Clean the overrunning clutch assembly, clutch cam, low-reverse drum, and overdrive piston retainer in solvent. Dry them with compressed air after cleaning.

INSPECTION

Inspect condition of each clutch part after cleaning. Replace the overrunning clutch roller and spring assembly if any rollers or springs are worn or damaged, or if the roller cage is distorted, or damaged. Replace the cam if worn, cracked or damaged.

Replace the low-reverse drum if the clutch race, roller surface or inside diameter is scored, worn or damaged. **Do not remove the clutch race from the low-reverse drum under any circumstances. Replace the drum and race as an assembly if either component is damaged.**

Examine the overdrive piston retainer carefully for wear, cracks, scoring or other damage. Be sure the retainer hub is a snug fit in the case and drum. Replace the retainer if worn or damaged.

ASSEMBLY

(1) Examine bolt holes in overrunning clutch cam. Note that one hole is **not threaded** (Fig. 196). This hole must align with blank area in clutch cam bolt circle (Fig. 197). Mark hole location on clutch cam and blank area in case with grease pencil, paint stripe, or scribe mark for assembly reference.

(2) Mark location of non-threaded hole in clutch cam and blank area in bolt circle with grease pencil.

(3) Align and install overrunning clutch and cam in case (Fig. 198). Be sure cam is correctly installed. Bolt holes in cam are slightly countersunk on one side. Be sure this side of cam faces rearward (toward piston retainer).

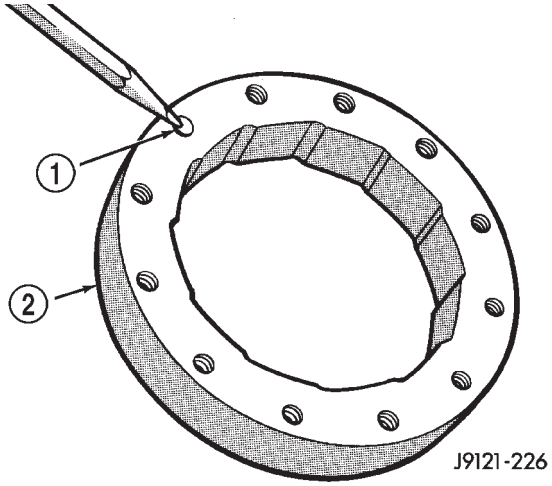

Fig. 196 Location Of Non-Threaded Hole In Clutch Cam

1 - NON-THREADED HOLE
2 - OVERRUNNING CLUTCH CAM

OVERRUNNING CLUTCH CAM/OVERDRIVE PISTON RETAINER (Continued)

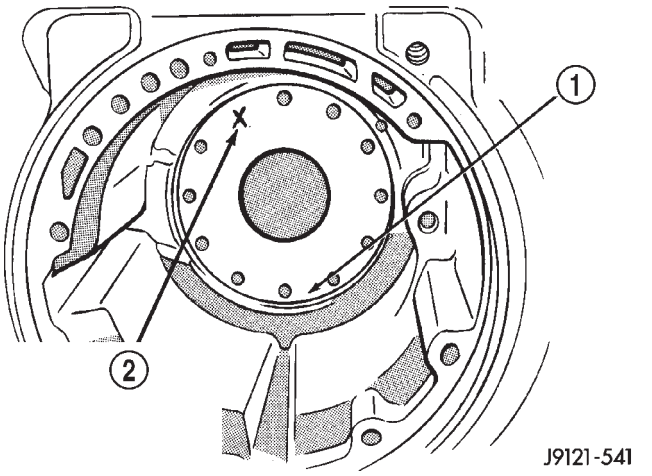

Fig. 197 Location Of Blank Area In Clutch Cam Bolt Circle

1 - OVERRUNNING CLUTCH CAM SEAT IN CASE
2 - NON-THREADED HOLE IN CLUTCH CAM ALIGNS HERE (BLANK AREA) OF SEAT

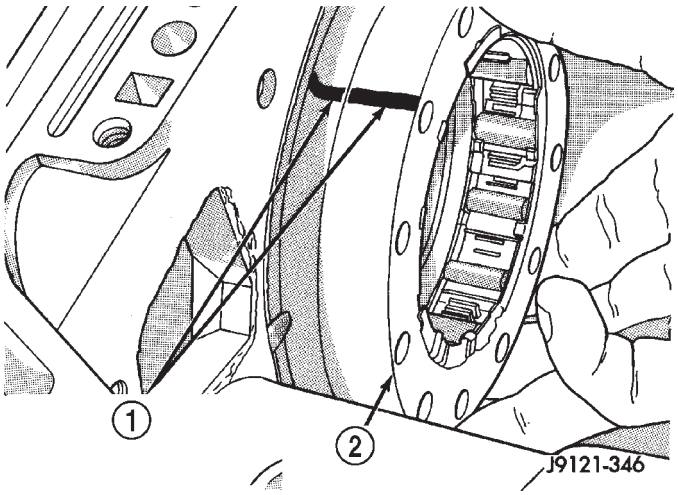

Fig. 198 Overrunning Clutch Installation

1 - ALIGN MARKS IDENTIFYING NON-THREADED HOLE IN CAM AND CASE
2 - OVERRUNNING CLUTCH ASSEMBLY

(4) Verify that non-threaded hole in clutch cam is properly aligned. Check alignment by threading a bolt into each bolt hole. Adjust clutch cam position if necessary.

(5) Install and tighten overrunning clutch cam bolts to 17 N·m (13 ft. lbs.) torque. Note that clutch cam bolts are shorter than piston retainer bolts.

(6) Install new gasket at rear of transmission case. Use petroleum jelly to hold gasket in place. Be sure to align governor feed holes in gasket with feed passages in case (Fig. 199). Also install gasket before overdrive piston retainer. Center hole in gasket is smaller than retainer and cannot be installed over retainer.

(7) Position overdrive piston retainer on transmission case and align bolt holes in retainer, gasket and case (Fig. 200). Then install and tighten retainer bolts to 17 N·m (13 ft. lbs.) torque.

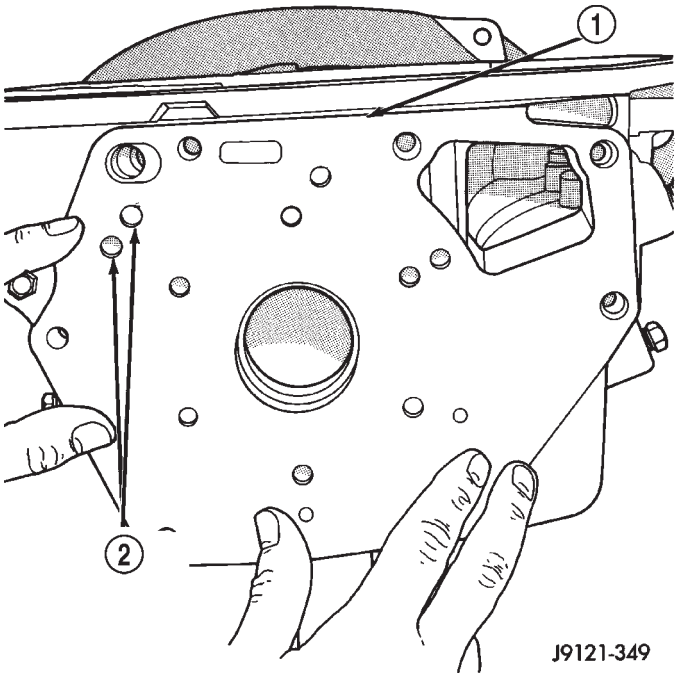

Fig. 199 Installing/Aligning Case Gasket

1 - CASE GASKET
2 - BE SURE GOVERNOR TUBE FEED HOLES IN CASE AND GASKET ARE ALIGNED

(8) Install new seals on over drive piston.

(9) Stand transmission case upright on bellhousing.

(10) Position Guide Ring 8114-1 on outer edge of overdrive piston retainer.

(11) Position Seal Guide 8114-2 on inner edge of overdrive piston retainer.

(12) Install overdrive piston in overdrive piston retainer by: aligning locating lugs on overdrive piston to the two mating holes in retainer.

(a) Aligning locating lugs on overdrive piston to the two mating holes in retainer.

(b) Lubricate overdrive piston seals with Mopar® Door Ease, or equivalent.

(c) Install piston over Seal Guide 8114-2 and inside Guide Ring 8114-1.

(d) Push overdrive piston into position in retainer.

(e) Verify that the locating lugs entered the lug bores in the retainer.

NOTE: Install the remaining transmission components and the overdrive unit.

OVERRUNNING CLUTCH CAM/OVERDRIVE PISTON RETAINER (Continued)

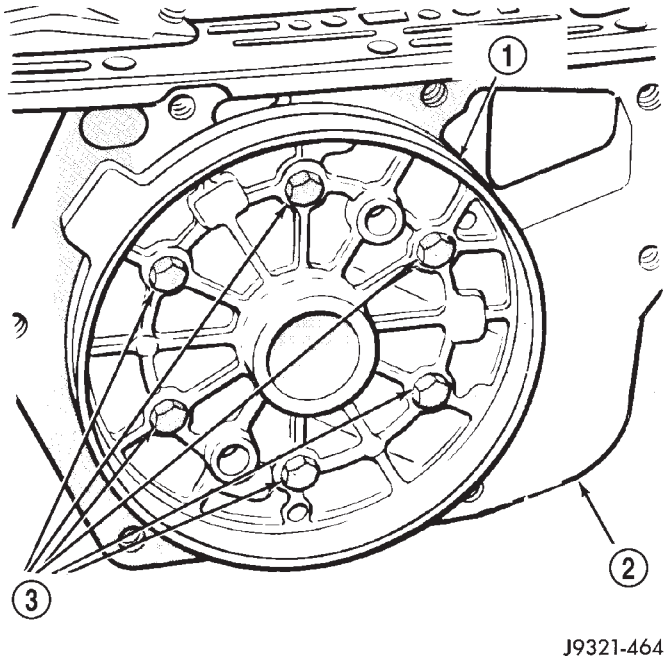

Fig. 200 Aligning Overdrive Piston Retainer

1 - PISTON RETAINER
2 - GASKET
3 - RETAINER BOLTS

PARK/NEUTRAL POSITION SWITCH

DIAGNOSIS AND TESTING - PARK/NEUTRAL POSITION SWITCH

The center terminal of the park/neutral position switch is the starter-circuit terminal. It provides the ground for the starter solenoid circuit through the selector lever in PARK and NEUTRAL positions only. The outer terminals on the switch are for the backup lamp circuit.

SWITCH TEST

To test the switch, remove the wiring connector. Test for continuity between the center terminal and the transmission case. Continuity should exist only when the transmission is in PARK or NEUTRAL.

Shift the transmission into REVERSE and test continuity at the switch outer terminals. Continuity should exist only when the transmission is in REVERSE. Continuity should not exist between the outer terminals and the case.

Check gearshift linkage adjustment before replacing a switch that tests faulty.

REMOVAL

(1) Raise vehicle and position drain pan under switch.
(2) Disconnect switch wires.
(3) Remove switch from case.

INSTALLATION

(1) Move shift lever to PARK and NEUTRAL positions. Verify that switch operating lever fingers are centered in switch opening in case (Fig. 201).

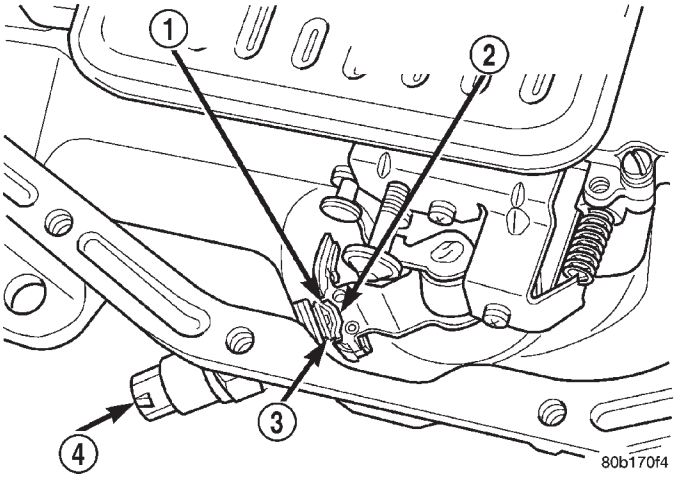

Fig. 201 Park/Neutral Position Switch

1 - NEUTRAL CONTACT
2 - MANUAL LEVER AND SWITCH PLUNGER IN REVERSE POSITION
3 - PARK CONTACT
4 - SWITCH

(2) Install new seal on switch and install switch in case. Tighten switch to 34 N·m (25 ft. lbs.) torque.
(3) Test continuity of new switch with 12V test lamp.
(4) Connect switch wires and lower vehicle.
(5) Top off transmission fluid level.

PISTONS

DESCRIPTION

There are several sizes and types of pistons used in an automatic transmission. Some pistons are used to apply clutches, while others are used to apply bands. They all have in common the fact that they are round or circular in shape, located within a smooth walled cylinder, which is closed at one end and converts fluid pressure into mechanical movement. The fluid pressure exerted on the piston is contained within the system through the use of piston rings or seals.

PISTONS (Continued)

OPERATION

The principal which makes this operation possible is known as Pascal's Law. Pascal's Law can be stated as: "Pressure on a confined fluid is transmitted equally in all directions and acts with equal force on equal areas."

PRESSURE

Pressure (Fig. 202) is nothing more than force (lbs.) divided by area (in or ft.), or force per unit area. Given a 100 lb. block and an area of 100 sq. in. on the floor, the pressure exerted by the block is: 100 lbs. 100 in or 1 pound per square inch, or PSI as it is commonly referred to.

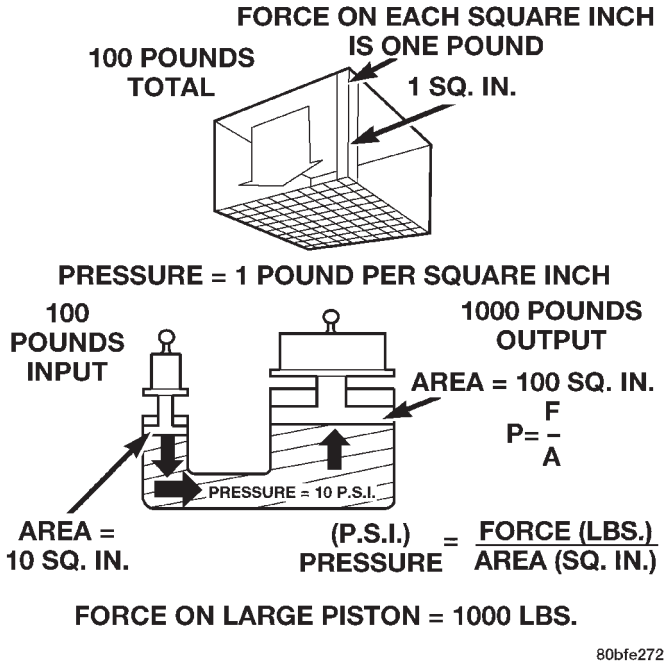

Fig. 202 Force and Pressure Relationship

PRESSURE ON A CONFINED FLUID

Pressure is exerted on a confined fluid (Fig. 203) by applying a force to some given area in contact with the fluid. A good example of this is a cylinder filled with fluid and equipped with a piston that is closely fitted to the cylinder wall. If a force is applied to the piston, pressure will be developed in the fluid. Of course, no pressure will be created if the fluid is not confined. It will simply "leak" past the piston. There must be a resistance to flow in order to create pressure. Piston sealing is extremely important in hydraulic operation. Several kinds of seals are used to accomplish this within a transmission. These include but are not limited to O-rings, D-rings, lip seals, sealing rings, or extremely close tolerances between the piston and the cylinder wall. The force exerted is downward (gravity), however, the principle remains the same no matter which direction is taken. The pressure created in the fluid is equal to the force applied, divided by the piston area. If the force is 100 lbs., and the piston area is 10 sq. in., then the pressure created equals 10 PSI. Another interpretation of Pascal's Law is that regardless of container shape or size, the pressure will be maintained throughout, as long as the fluid is confined. In other words, the pressure in the fluid is the same everywhere within the container.

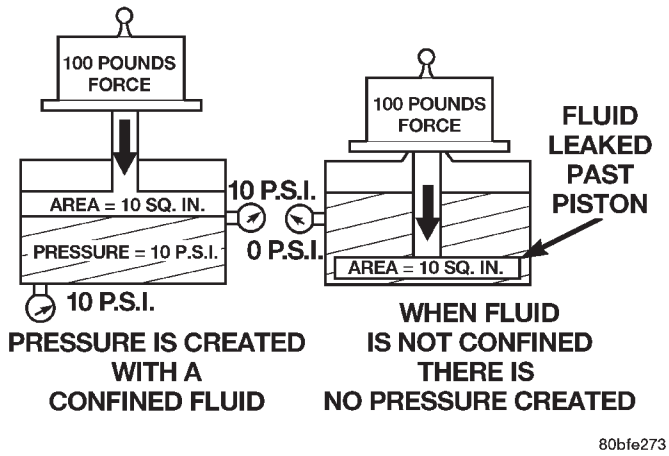

Fig. 203 Pressure on a Confined Fluid

FORCE MULTIPLICATION

Using the 10 PSI example used in the illustration (Fig. 204), a force of 1000 lbs. can be moved with a force of only 100 lbs. The secret of force multiplication in hydraulic systems is the total fluid contact area employed. The illustration, (Fig. 204), shows an area that is ten times larger than the original area. The pressure created with the smaller 100 lb. input is 10 PSI. The concept "pressure is the same everywhere" means that the pressure underneath the larger piston is also 10 PSI. Pressure is equal to the force applied divided by the contact area. Therefore, by means of simple algebra, the output force may be found. This concept is extremely important, as it is also used in the design and operation of all shift valves and limiting valves in the valve body, as well as the pistons, of the transmission, which activate the clutches and bands. It is nothing more than using a difference of area to create a difference in pressure to move an object.

PISTONS (Continued)

PISTON TRAVEL

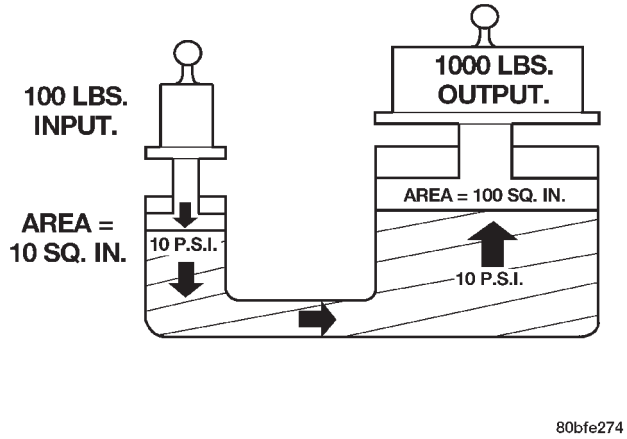

Fig. 204 Force Multiplication

The relationship between hydraulic lever and a mechanical lever is the same. With a mechanical lever it's a weight-to-distance output rather than a pressure-to-area output. Using the same forces and areas as in the previous example, the smaller piston (Fig. 205) has to move ten times the distance required to move the larger piston one inch. Therefore, for every inch the larger piston moves, the smaller piston moves ten inches. This principle is true in other instances also. A common garage floor jack is a good example. To raise a car weighing 2000 lbs., an effort of only 100 lbs. may be required. For every inch the car moves upward, the input piston at the jack handle must move 20 inches downward.

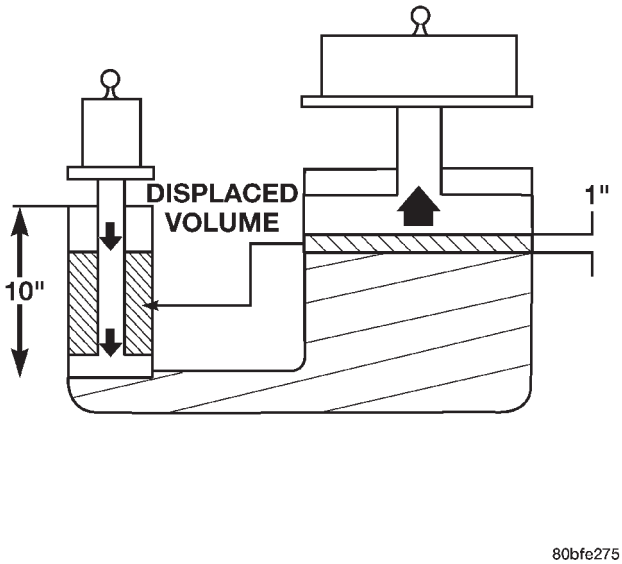

Fig. 205 Piston Travel

PLANETARY GEARTRAIN/ OUTPUT SHAFT

DESCRIPTION

The planetary gearsets (Fig. 206) are designated as the front, rear, and overdrive planetary gear assemblies and located in such order. A simple planetary gearset consists of three main members:

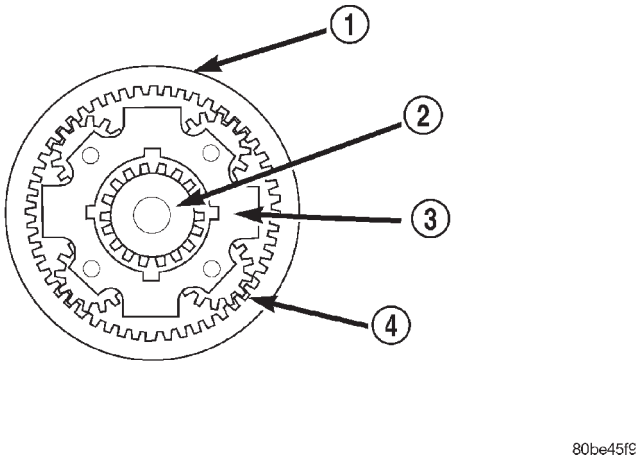

Fig. 206 Planetary Gearset

1 - ANNULUS GEAR
2 - SUN GEAR
3 - PLANET CARRIER
4 - PLANET PINIONS (4)

- The sun gear which is at the center of the system.
- The planet carrier with planet pinion gears which are free to rotate on their own shafts and are in mesh with the sun gear.
- The annulus gear, which rotates around and is in mesh with the planet pinion gears.

NOTE: The number of pinion gears does not affect the gear ratio, only the duty rating.

OPERATION

With any given planetary gearset, several conditions must be met for power to be able to flow:

- One member must be held.
- Another member must be driven or used as an input.
- The third member may be used as an output for power flow.
- For direct drive to occur, two gear members in the front planetary gearset must be driven.

NOTE: Gear ratios are dependent on the number of teeth on the annulus and sun gears.

PLANETARY GEARTRAIN/OUTPUT SHAFT (Continued)

DISASSEMBLY

(1) Remove planetary snap-ring (Fig. 207).

(2) Remove front annulus and planetary assembly from driving shell (Fig. 207).

(3) Remove snap-ring that retains front planetary gear in annulus gear (Fig. 208).

(4) Remove tabbed thrust washer and tabbed thrust plate from hub of front annulus (Fig. 209).

(5) Separate front annulus and planetary gears (Fig. 209).

(6) Remove front planetary gear front thrust washer from annulus gear hub.

(7) Separate and remove driving shell, rear planetary and rear annulus from output shaft (Fig. 210).

(8) Remove front planetary rear thrust washer from driving shell.

(9) Remove tabbed thrust washers from rear planetary gear.

(10) Remove lock ring that retains sun gear in driving shell. Then remove sun gear, spacer and thrust plates.

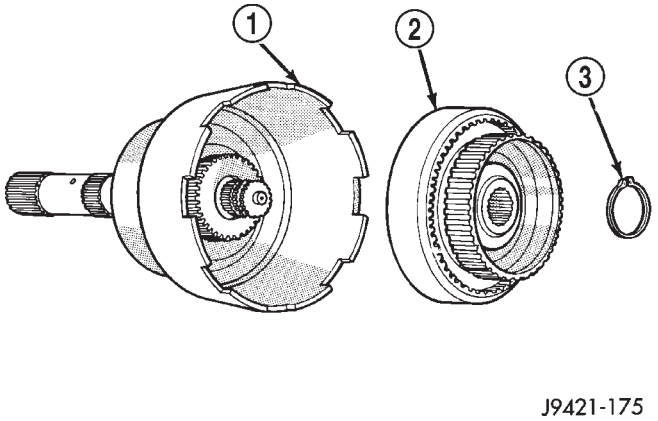

Fig. 207 Front Annulus And Planetary Assembly Removal

1 - DRIVING SHELL
2 - FRONT ANNULUS AND PLANETARY ASSEMBLY
3 - PLANETARY SNAP-RING

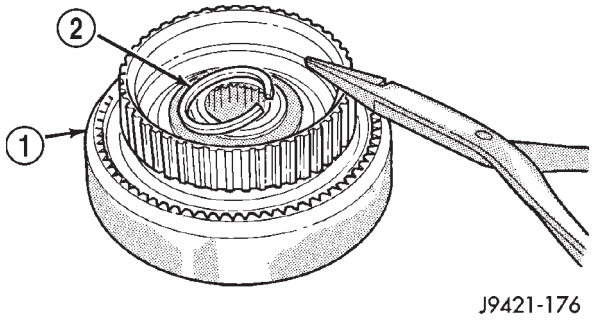

Fig. 208 Front Planetary Snap-Ring Removal

1 - FRONT ANNULUS GEAR
2 - PLANETARY SNAP-RING

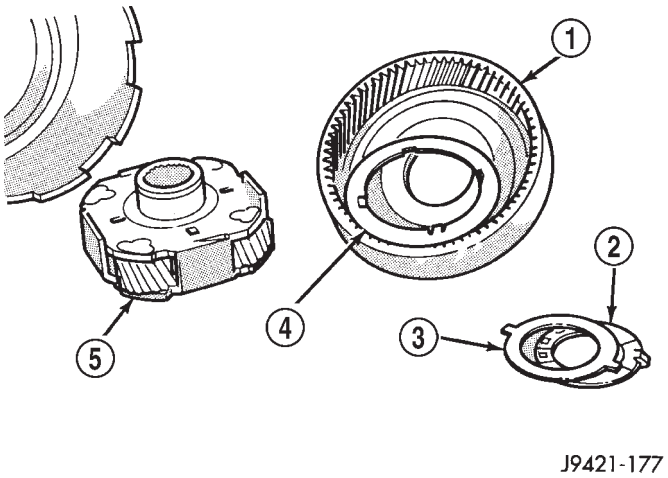

Fig. 209 Front Planetary And Annulus Gear Disassembly

1 - FRONT ANNULUS
2 - THRUST WASHER
3 - THRUST PLATE
4 - FRONT THRUST WASHER
5 - FRONT PLANETARY

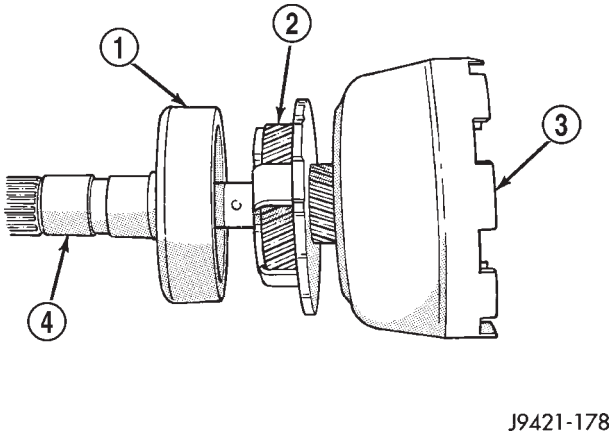

Fig. 210 Removing Driving Shell, Rear Planetary And Rear Annulus

1 - REAR ANNULUS
2 - REAR PLANETARY
3 - DRIVING SHELL
4 - OUTPUT SHAFT

INSPECTION

Check sun gear and driving shell condition. Replace the gear if damaged or if the bushings are scored or worn. The bushings are not serviceable. Replace the driving shell if worn, cracked or damaged.

Replace planetary gear sets if gears, pinion pins, or carrier are damaged in any way. Replace the annulus gears and supports if either component is worn or damaged.

Inspect the geartrain spacers, thrust plates, snap-rings, and thrust washers. Replace any of these parts that are worn, distorted or damaged. Do not attempt to reuse these parts.

PLANETARY GEARTRAIN/OUTPUT SHAFT (Continued)

The planetary gear thrust washers are different sizes. The large diameter washers go on the front planetary and the smaller washers go on the rear planetary. All the washers have four locating tabs on them. These tabs fit in the holes or slots provided in each planetary gear.

Inspect the output shaft carefully. Pay particular attention to the machined bushing/bearing surfaces on the shaft and the governor valve shaft bore at the shaft rear.

Replace the output shaft if the machined surfaces are scored, pitted, or damaged in any way. Also replace the shaft if the splines are damaged, or exhibits cracks at any location (especially at the governor valve shaft bore).

The annulus gears can be removed from their supports if necessary. Just remove the snap-rings and separate the two parts when replacement is necessary. In addition, the annulus gear bushings can be replaced if severely worn, or scored. However it is not necessary to replace the bushings if they only exhibit normal wear. Check bushing fit on the output shaft to be sure.

ASSEMBLY

(1) Lubricate output shaft and planetary components with transmission fluid. Use petroleum jelly to lubricate and hold thrust washers and plates in position.

(2) Assemble rear annulus gear and support if disassembled. Be sure support snap-ring is seated and that shoulder-side of support faces rearward (Fig. 211).

(3) Install rear thrust washer on rear planetary gear. Use enough petroleum jelly to hold washer in place. Also be sure all four washer tabs are properly engaged in gear slots.

(4) Install rear annulus over and onto rear planetary gear (Fig. 211).

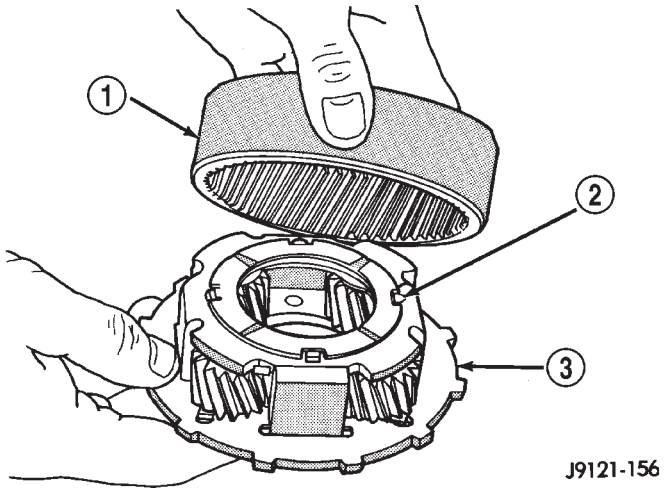

Fig. 211 Assembling Rear Annulus And Planetary Gear

1 - REAR ANNULUS GEAR
2 - TABBED THRUST WASHER
3 - REAR PLANETARY

(5) Install assembled rear planetary and annulus gear on output shaft (Fig. 212). Verify that assembly is fully seated on shaft.

(6) Install front thrust washer on rear planetary gear (Fig. 213). Use enough petroleum jelly to hold washer on gear. Be sure all four washer tabs are seated in slots.

(7) Install spacer on sun gear (Fig. 214).

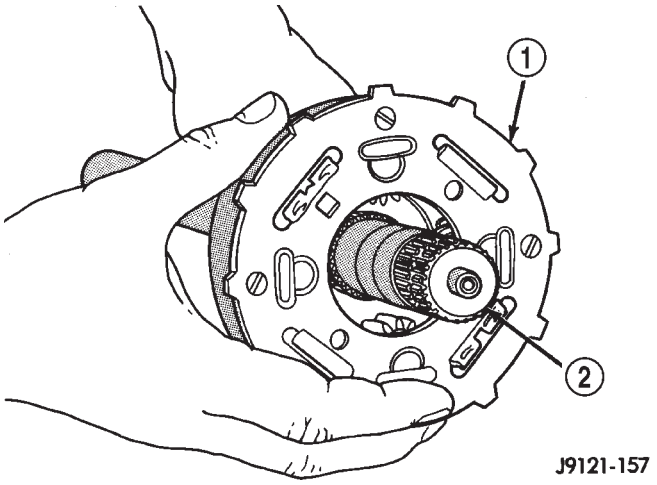

Fig. 212 Installing Rear Annulus And Planetary On Output Shaft

1 - REAR ANNULUS AND PLANETARY GEAR ASSEMBLY
2 - OUTPUT SHAFT

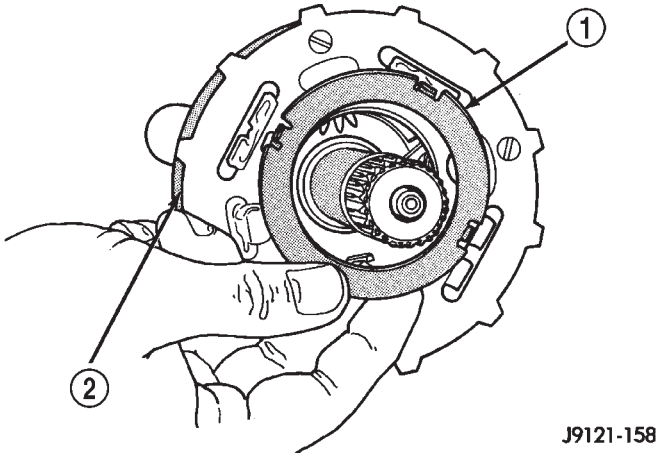

Fig. 213 Installing Rear Planetary Front Thrust Washer

1 - FRONT TABBED THRUST WASHER
2 - REAR PLANETARY GEAR

PLANETARY GEARTRAIN/OUTPUT SHAFT (Continued)

(8) Install thrust plate on sun gear (Fig. 215). Note that driving shell thrust plates are interchangeable. Use either plate on sun gear and at front/rear of shell.

(9) Hold sun gear in place and install thrust plate over sun gear at rear of driving shell (Fig. 216).

(10) Position wood block on bench and support sun gear on block (Fig. 217). This makes it easier to align and install sun gear lock ring. Keep wood block handy as it will also be used for geartrain end play check.

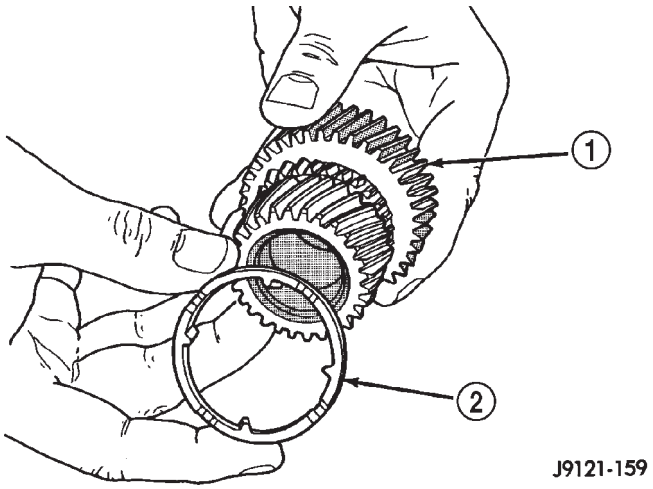

Fig. 214 Installing Spacer On Sun Gear

1 - SUN GEAR
2 - SUN GEAR SPACER

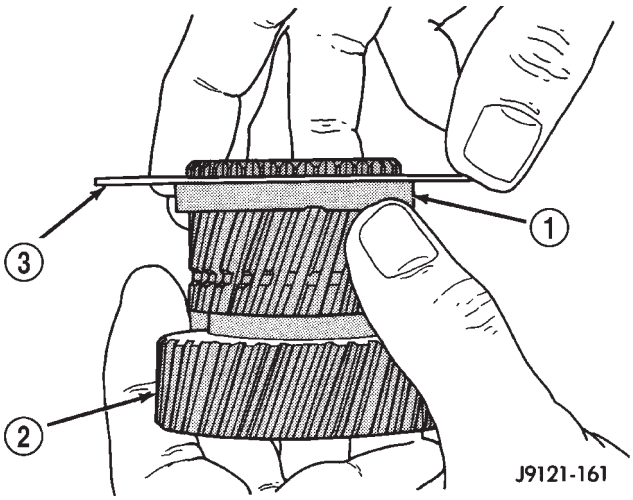

Fig. 215 Installing Driving Shell Front Thrust Plate On Sun Gear

1 - SPACER
2 - SUN GEAR
3 - THRUST PLATE

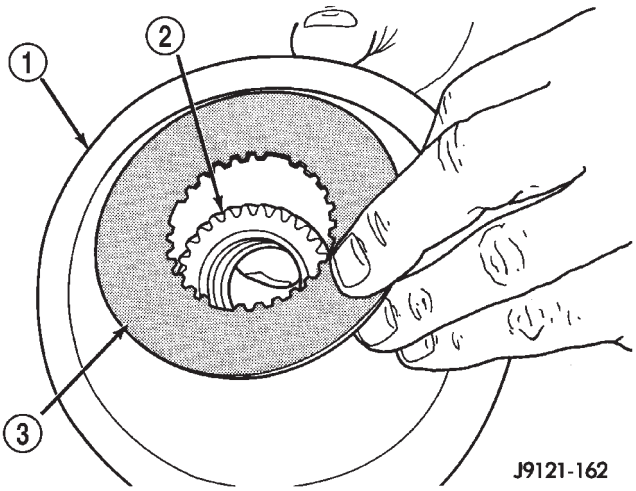

Fig. 216 Installing Driving Shell Rear Thrust Plate

1 - DRIVING SHELL
2 - SUN GEAR
3 - REAR THRUST PLATE

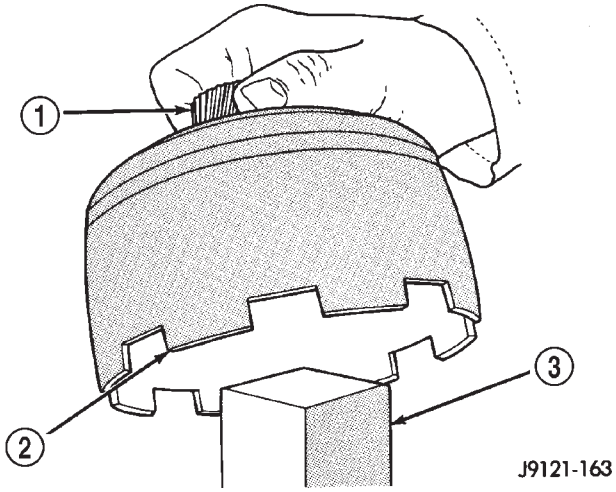

Fig. 217 Supporting Sun Gear On Wood Block

1 - SUN GEAR
2 - DRIVING SHELL
3 - WOOD BLOCK

PLANETARY GEARTRAIN/OUTPUT SHAFT (Continued)

(11) Align rear thrust plate on driving shell and install sun gear lock ring. Be sure ring is fully seated in sun gear ring groove (Fig. 218).

(12) Install assembled driving shell and sun gear on output shaft (Fig. 219).

(13) Install rear thrust washer on front planetary gear (Fig. 220). Use enough petroleum jelly to hold washer in place and be sure all four washer tabs are seated.

(14) Install front planetary gear on output shaft and in driving shell (Fig. 221).

(15) Install front thrust washer on front planetary gear. Use enough petroleum jelly to hold washer in place and be sure all four washer tabs are seated.

(16) Assemble front annulus gear and support, if necessary. Be sure support snap-ring is seated.

(17) Install front annulus on front planetary (Fig. 221).

(18) Position thrust plate on front annulus gear support (Fig. 222). Note that plate has two tabs on it. These tabs fit in notches of annulus hub.

(19) Install thrust washer in front annulus (Fig. 223). Align flat on washer with flat on planetary hub. Also be sure washer tab is facing up.

(20) Install front annulus snap-ring (Fig. 224). Use snap-ring pliers to avoid distorting ring during installation. Also be sure ring is fully seated.

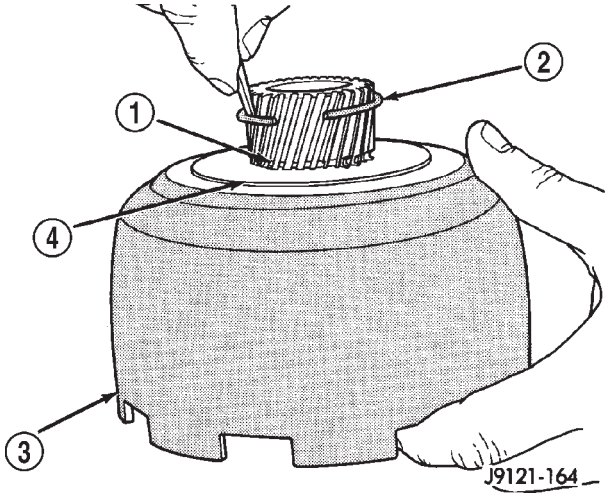

Fig. 218 Installing Sun Gear Lock Ring

1 - LOCK RING GROOVE
2 - SUN GEAR LOCK RING
3 - DRIVING SHELL
4 - REAR THRUST PLATE

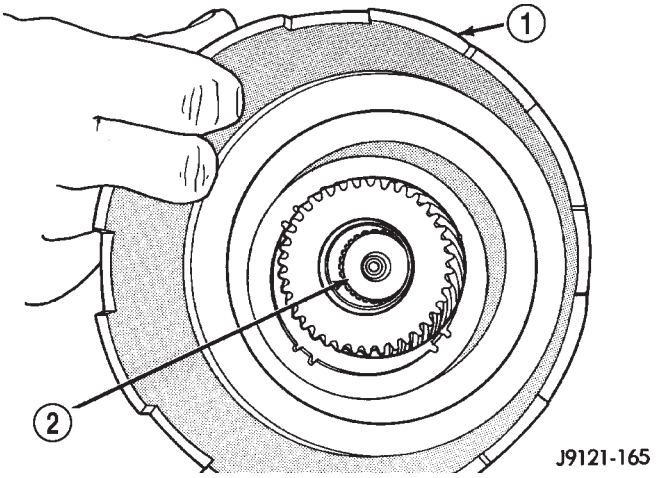

Fig. 219 Installing Assembled Sun Gear And Driving Shell On Output Shaft

1 - SUN GEAR/DRIVING SHELL ASSEMBLY
2 - OUTPUT SHAFT

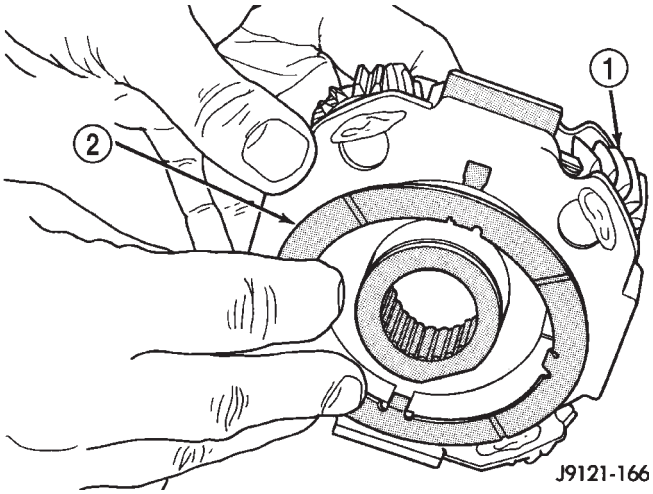

Fig. 220 Installing Rear Thrust Washer On Front Planetary Gear

1 - FRONT PLANETARY GEAR
2 - REAR TABBED THRUST WASHER

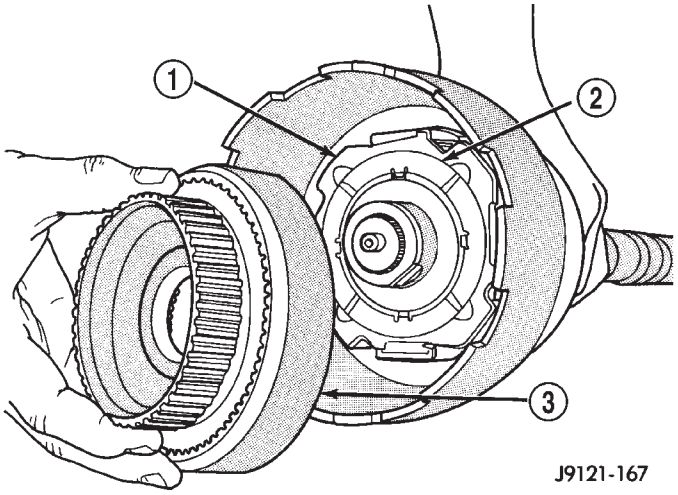

Fig. 221 Installing Front Planetary And Annulus Gears

1 - FRONT PLANETARY GEAR
2 - FRONT THRUST WASHER
3 - FRONT ANNULUS GEAR

PLANETARY GEARTRAIN/OUTPUT SHAFT (Continued)

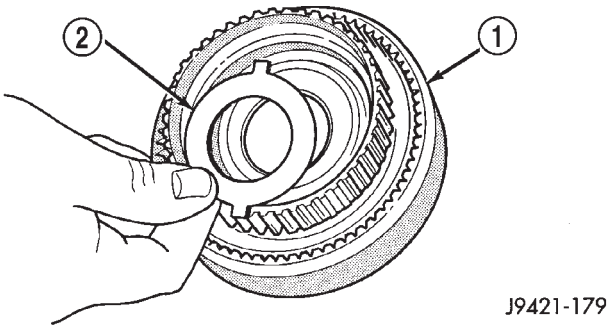

Fig. 222 Positioning Thrust Plate On Front Annulus Support

1 - FRONT ANNULUS
2 - THRUST PLATE

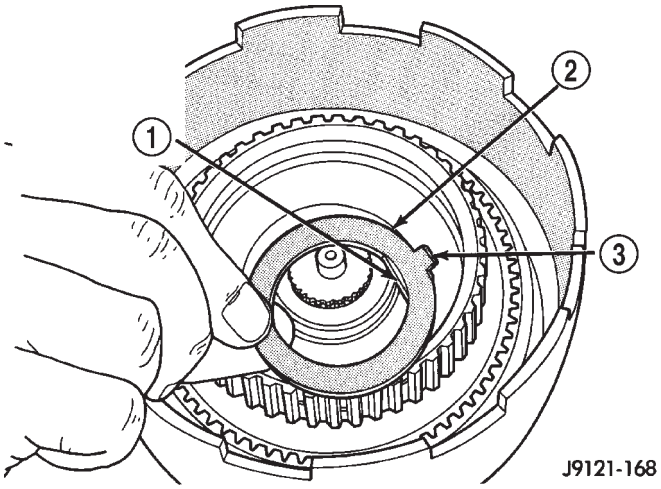

Fig. 223 Installing Front Annulus Thrust Washer

1 - WASHER FLAT ALIGNS WITH FLAT ON PLANETARY HUB
2 - FRONT ANNULUS THRUST WASHER
3 - TAB FACES FRONT

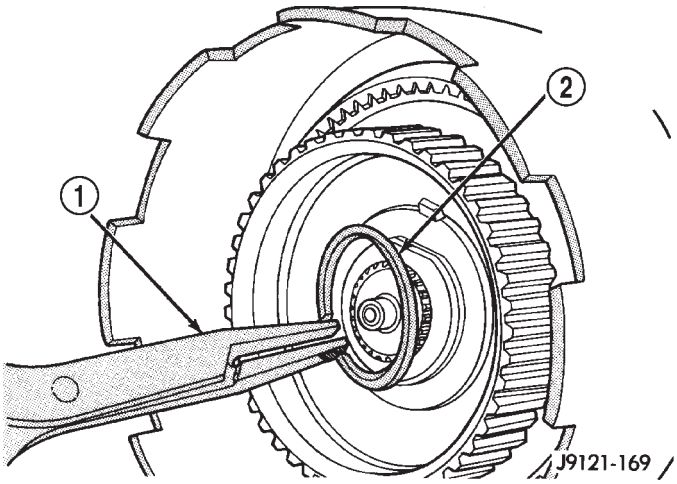

Fig. 224 Installing Front Annulus Snap-Ring

1 - SNAP-RING PLIERS
2 - FRONT ANNULUS SNAP-RING

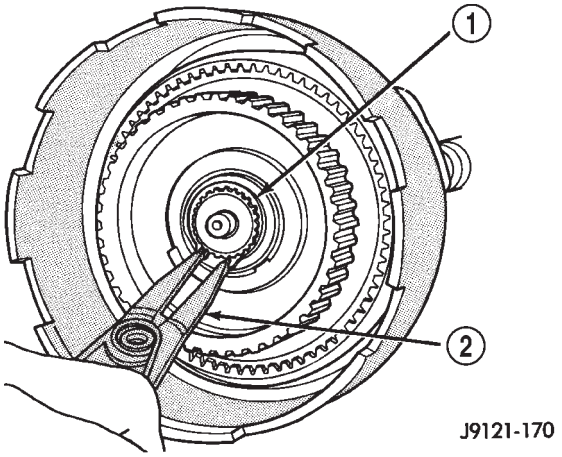

Fig. 225 Installing Planetary Selective Snap-Ring

1 - SELECTIVE SNAP-RING
2 - SNAP-RING PLIERS

(21) Install planetary selective snap-ring with snap-ring pliers (Fig. 225). Be sure ring is fully seated.

(22) Turn planetary geartrain assembly over so driving shell is facing workbench. Then support geartrain on wood block positioned under forward end of output shaft. This allows geartrain components to move forward for accurate end play check.

(23) Check planetary geartrain end play with feeler gauge (Fig. 226). Gauge goes between shoulder on output shaft and end of rear annulus support.

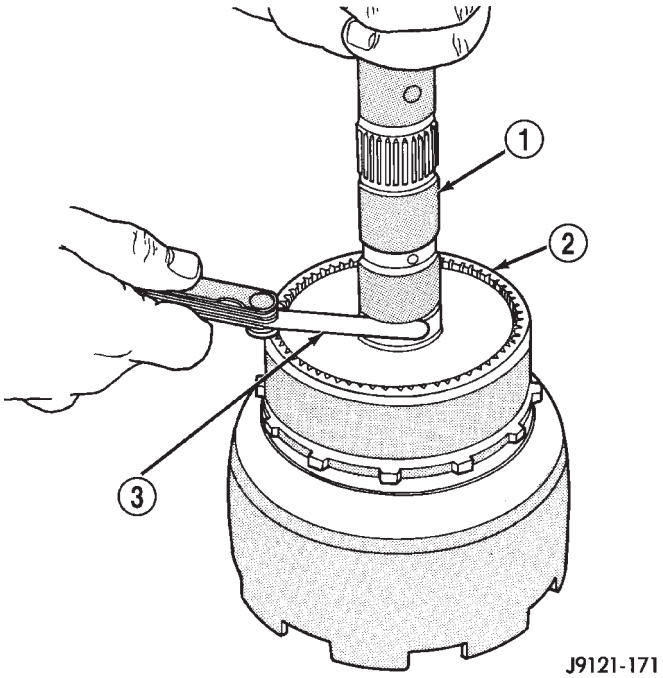

Fig. 226 Checking Planetary Geartrain End Play

1 - OUTPUT SHAFT
2 - REAR ANNULUS GEAR
3 - FEELER GAUGE

PLANETARY GEARTRAIN/OUTPUT SHAFT (Continued)

(24) Geartrain end play should be 0.12 to 1.22 mm (0.005 to 0.048 in.). If end play is incorrect, snap-ring (or thrust washers) may have to be replaced. Snap-rings are available in three different thicknesses for adjustment purposes.

REAR CLUTCH

DESCRIPTION

The rear clutch assembly (Fig. 227) is composed of the rear clutch retainer, pressure plate, clutch plates, driving discs, piston, Belleville spring, and snap-rings. The Belleville spring acts as a lever to multiply the force applied on to it by the apply piston. The increased apply force on the rear clutch pack, in comparison to the front clutch pack, is needed to hold against the greater torque load imposed onto the rear pack. The rear clutch is directly behind the front clutch and is considered a driving component.

NOTE: The number of discs and plates may vary with each engine and vehicle combination.

OPERATION

To apply the clutch, pressure is applied between the clutch retainer and piston. The fluid pressure is provided by the oil pump, transferred through the control valves and passageways, and enters the clutch through the hub of the reaction shaft support. With pressure applied between the clutch retainer and piston, the piston moves away from the clutch retainer and compresses the clutch pack. This action applies the clutch pack, allowing torque to flow through the input shaft into the driving discs, and into the clutch plates and pressure plate that are

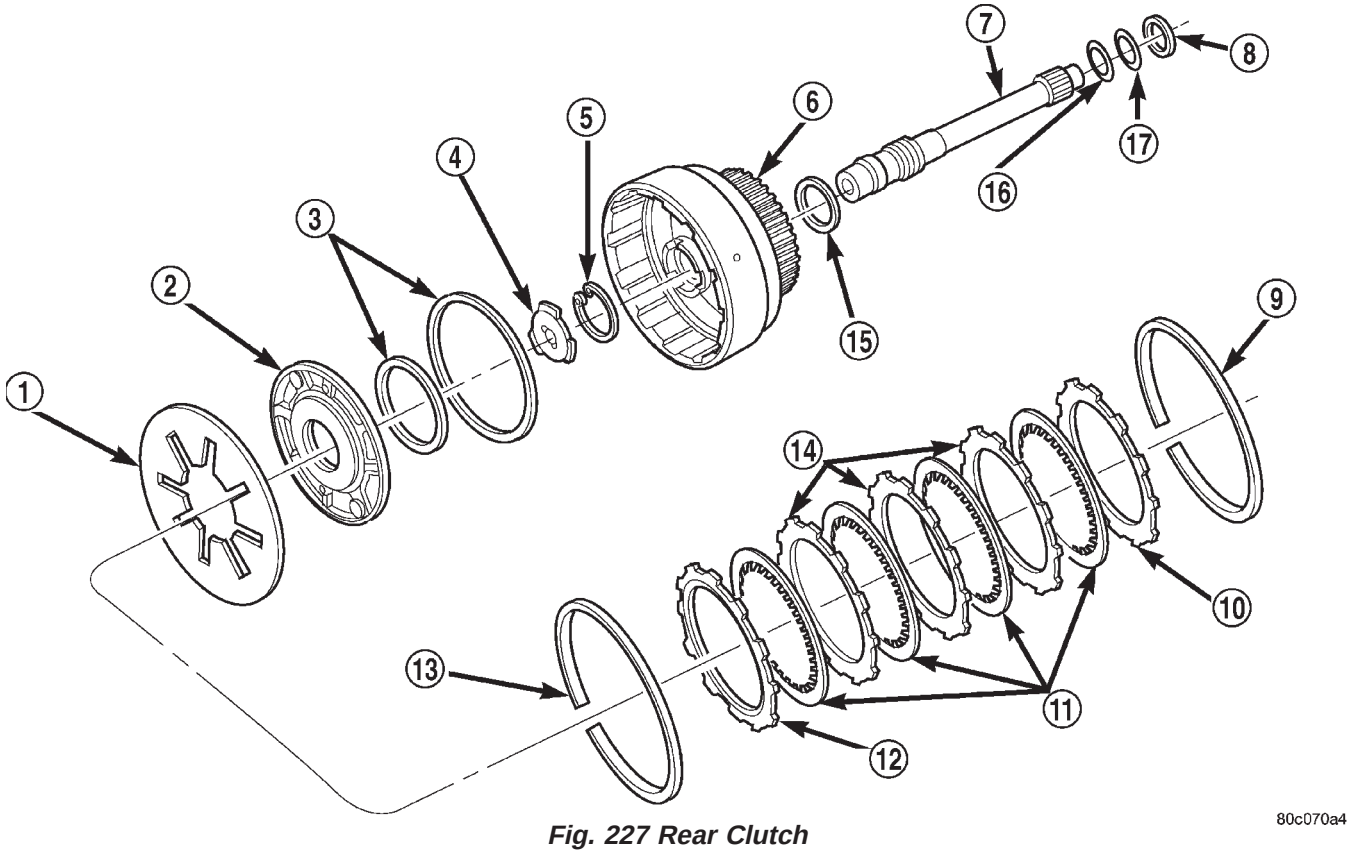

Fig. 227 Rear Clutch

1 - PISTON SPRING
2 - REAR CLUTCH PISTON
3 - CLUTCH PISTON SEALS
4 - OUTPUT SHAFT THRUST WASHER (METAL)
5 - INPUT SHAFT SNAP-RING
6 - REAR CLUTCH RETAINER
7 - INPUT SHAFT
8 - REAR CLUTCH THRUST WASHER (FIBER)
9 - CLUTCH PACK SNAP-RING (SELECTIVE)
10 - TOP PRESSURE PLATE
11 - CLUTCH DISCS (4)
12 - BOTTOM PRESSURE PLATE
13 - WAVE SPRING
14 - CLUTCH PLATES (3)
15 - RETAINER SEAL RING
16 - SHAFT REAR SEAL RING (PLASTIC)
17 - SHAFT FRONT SEAL RING (TEFLON)

REAR CLUTCH (Continued)

lugged to the clutch retainer. The waved snap-ring is used to cushion the application of the clutch pack. In some transmissions, the snap-ring is selective and used to adjust clutch pack clearance.

When pressure is released from the piston, the spring returns the piston to its fully released position and disengages the clutch. The release spring also helps to cushion the application of the clutch assembly. When the clutch is in the process of being released by the release spring, fluid flows through a vent and one-way ball-check-valve located in the clutch retainer. The check-valve is needed to eliminate the possibility of plate drag caused by centrifugal force acting on the residual fluid trapped in the clutch piston retainer.

DISASSEMBLY

(1) Remove fiber thrust washer from forward side of clutch retainer.

(2) Remove input shaft front/rear seal rings.

(3) Remove selective clutch pack snap-ring (Fig. 228).

(4) Remove top pressure plate, clutch discs, steel plates, bottom pressure plate and wave snap-ring and wave spring (Fig. 228).

(5) Remove clutch piston with rotating motion.

(6) Remove and discard piston seals.

(7) Remove input shaft snap-ring (Fig. 229). It may be necessary to press the input shaft in slightly to relieve tension on the snap-ring

(8) Press input shaft out of retainer with shop press and suitable size press tool. Use a suitably sized press tool to support the retainer as close to the input shaft as possible.

CLEANING

Clean the clutch components with solvent and dry them with compressed air. Do not use rags or shop

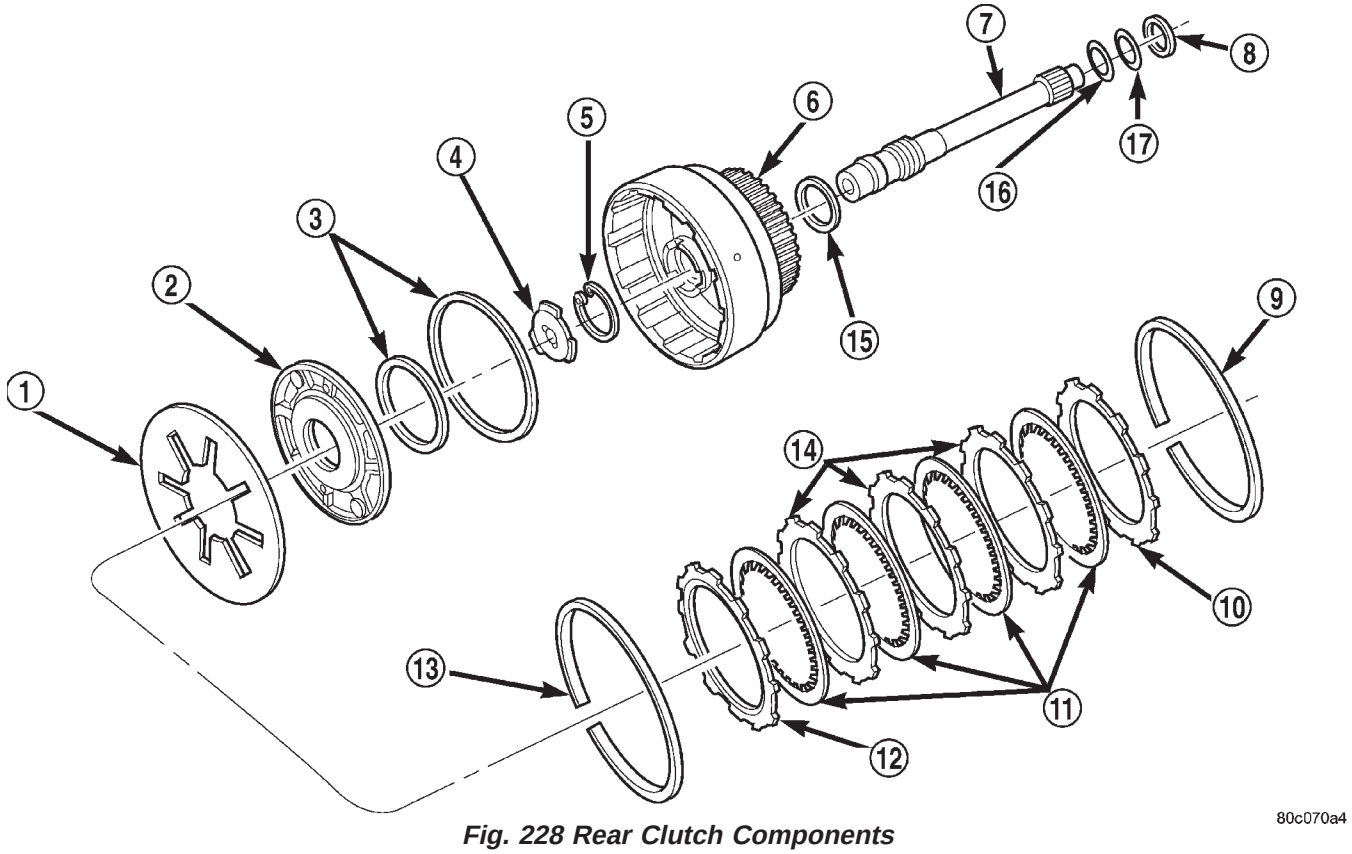

Fig. 228 Rear Clutch Components

1 - PISTON SPRING
2 - REAR CLUTCH PISTON
3 - CLUTCH PISTON SEALS
4 - OUTPUT SHAFT THRUST WASHER (METAL)
5 - INPUT SHAFT SNAP-RING
6 - REAR CLUTCH RETAINER
7 - INPUT SHAFT
8 - REAR CLUTCH THRUST WASHER (FIBER)
9 - CLUTCH PACK SNAP-RING (SELECTIVE)
10 - TOP PRESSURE PLATE
11 - CLUTCH DISCS (4)
12 - BOTTOM PRESSURE PLATE
13 - WAVE SPRING
14 - CLUTCH PLATES (3)
15 - RETAINER SEAL RING
16 - SHAFT REAR SEAL RING (PLASTIC)
17 - SHAFT FRONT SEAL RING (TEFLON)

REAR CLUTCH (Continued)

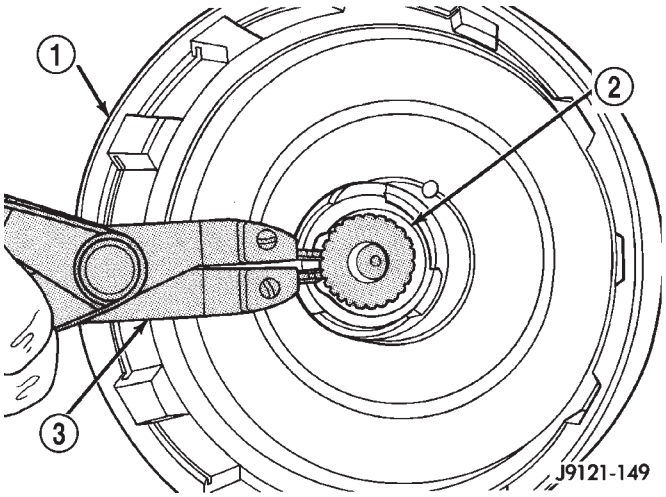

Fig. 229 Removing Input Shaft Snap-Ring

1 - REAR CLUTCH RETAINER
2 - INPUT SHAFT SNAP-RING
3 - SNAP-RING PLIERS

towels to dry any of the clutch parts. Lint from such materials will adhere to component surfaces and could restrict or block fluid passages after assembly.

INSPECTION

Replace the clutch discs if warped, worn, scored, burned/charred, the lugs are damaged, or if the facing is flaking off. Replace the top and bottom pressure plates if scored, warped, or cracked. Be sure the driving lugs on the pressure and clutch plates are also in good condition. The lugs must not be bent, cracked or damaged in any way.

Replace the piston spring and wave spring if either part is distorted, warped or broken.

Check the lug grooves in the clutch retainer. The clutch and pressure plates should slide freely in the slots. Replace the retainer if the grooves are worn or damaged. Also check action of the check balls in the retainer and piston. Each check ball must move freely and not stick.

Replace the retainer bushing if worn, scored, or doubt exists about bushing condition.

Inspect the piston and retainer seal surfaces for nicks or scratches. Minor scratches can be removed with crocus cloth. However, replace the piston and/or retainer if the seal surfaces are seriously scored.

Check condition of the fiber thrust washer and metal output shaft thrust washer. Replace either washer if worn or damaged.

Check condition of the seal rings on the input shaft and clutch retainer hub. Replace the seal rings only if worn, distorted, or damaged. The input shaft front seal ring is teflon with chamfered ends. The rear ring is metal with interlocking ends.

Check the input shaft for wear, or damage. Replace the shaft if worn, scored or damaged in any way.

ASSEMBLY

(1) Soak clutch discs in transmission fluid while assembling other clutch parts.

(2) Install new seal rings on clutch retainer hub and input shaft if necessary (Fig. 230) (Fig. 231).

(a) Be sure clutch hub seal ring is fully seated in groove and is not twisted.

(3) Lubricate splined end of input shaft and clutch retainer with transmission fluid. Then press input shaft into retainer. Use a suitably sized press tool to support retainer as close to input shaft as possible.

(4) Install input shaft snap-ring (Fig. 229).

(5) Invert retainer and press input shaft in opposite direction until snap-ring is seated.

(6) Install new seals on clutch piston. Be sure lip of each seal faces interior of clutch retainer.

(7) Lubricate lip of piston seals with generous quantity of Mopar® Door Ease. Then lubricate retainer hub and bore with light coat of transmission fluid.

(8) Install clutch piston in retainer. Use twisting motion to seat piston in bottom of retainer. A thin strip of plastic (about 0.020″ thick), can be used to guide seals into place if necessary.

CAUTION: Never push the clutch piston straight in. This will fold the seals over causing leakage and clutch slip. In addition, never use any type of metal tool to help ease the piston seals into place. Metal tools will cut, shave, or score the seals.

(9) Install piston spring in retainer and on top of piston (Fig. 233). Concave side of spring faces downward (toward piston).

(10) Install wave spring in retainer (Fig. 233). Be sure spring is completely seated in retainer groove.

(11) Install bottom pressure plate (Fig. 228). Ridged side of plate faces downward (toward piston) and flat side toward clutch pack.

(12) Install first clutch disc in retainer on top of bottom pressure plate. Then install a clutch plate followed by a clutch disc until entire clutch pack is installed (4 discs and 3 plates are required) (Fig. 228).

(13) Install top pressure plate.

(14) Install selective snap-ring. Be sure snap-ring is fully seated in retainer groove.

(15) Using a suitable gauge bar and dial indicator, measure clutch pack clearance (Fig. 234).

(a) Position gauge bar across the clutch drum with the dial indicator pointer on the pressure plate (Fig. 234).

(b) Using two small screw drivers, lift the pressure plate and release it.

REAR CLUTCH (Continued)

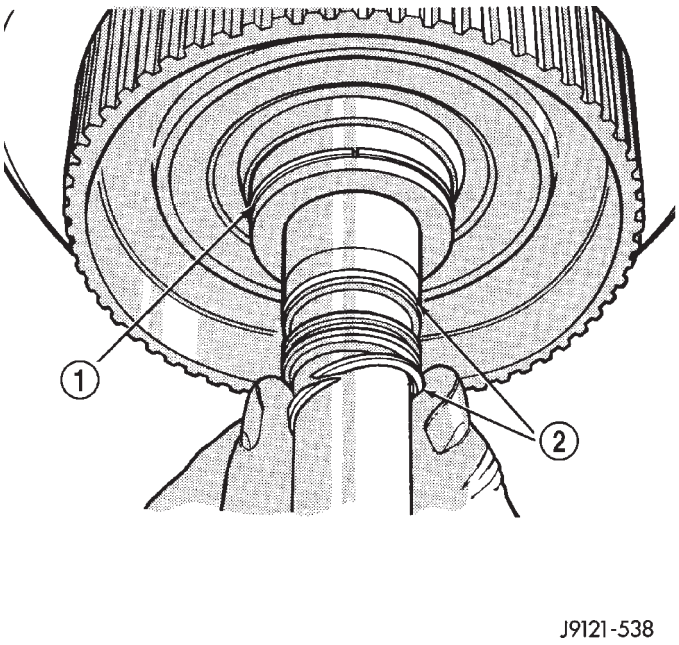

Fig. 230 Rear Clutch Retainer And Input Shaft Seal Ring Installation

1 - REAR CLUTCH RETAINER HUB SEAL RING
2 - INPUT SHAFT SEAL RINGS

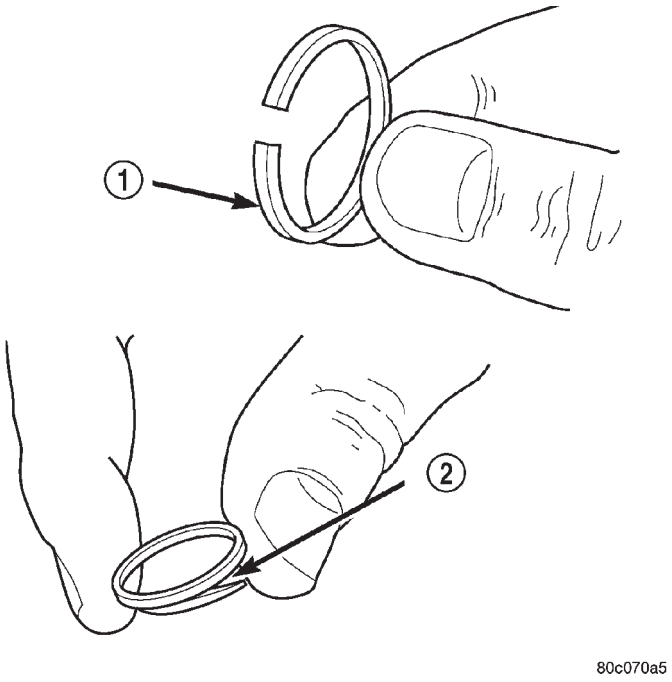

Fig. 231 Input Shaft Seal Ring Identification

1 - PLASTIC REAR SEAL RING
2 - TEFLON FRONT SEAL RING (SQUEEZE RING TOGETHER SLIGHTLY BEFORE INSTALLATION FOR BETTER FIT)

(c) Zero the dial indicator.

(d) Lift the pressure plate until it contacts the snap-ring and record the dial indicator reading.

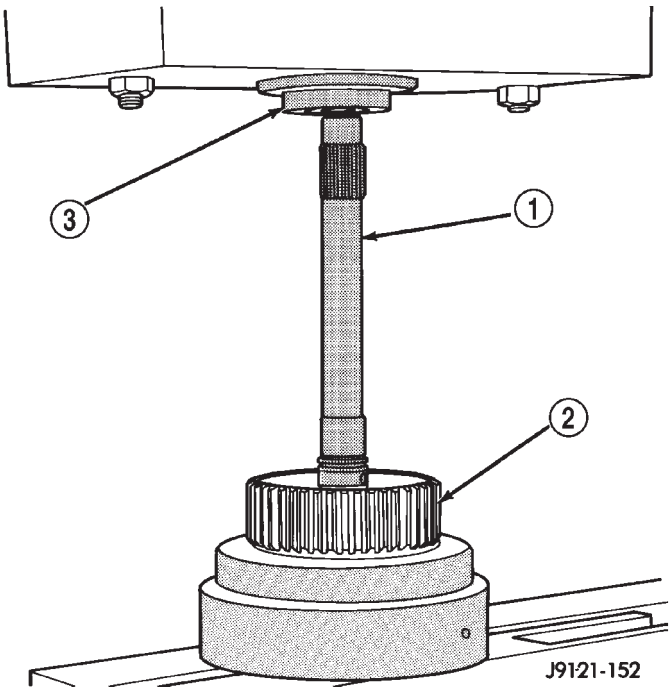

Fig. 232 Pressing Input Shaft Into Rear Clutch Retainer

1 - INPUT SHAFT
2 - REAR CLUTCH RETAINER
3 - PRESS RAM

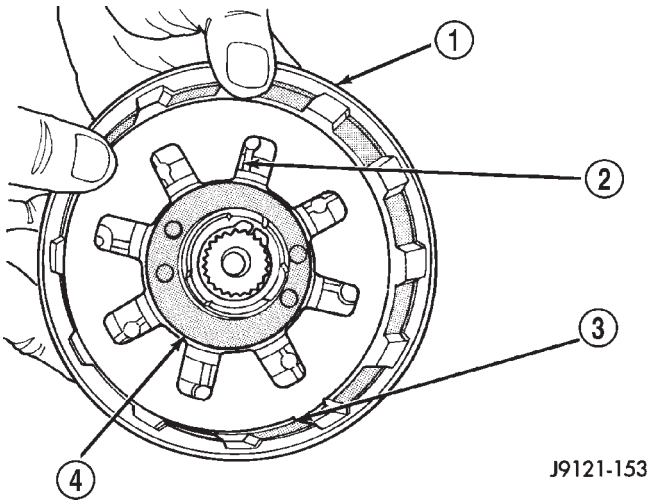

Fig. 233 Piston Spring/Wave Spring Position

1 - REAR CLUTCH RETAINER
2 - PISTON SPRING
3 - WAVE SPRING
4 - CLUTCH PISTON

Clearance should be 0.559 - 0.914 mm (0.022 - 0.036 in.). If clearance is incorrect, steel plates, discs, selective snap ring and pressure plates may have to be changed.

The selective snap-ring thicknesses are:

REAR CLUTCH (Continued)

- 0.107-0.109 in.
- 0.098-0.100 in.
- 0.095-0.097 in.
- 0.083-0.085 in.
- 0.076-0.078 in.
- 0.071-0.073 in.
- 0.060-0.062 in.

(16) Coat rear clutch thrust washer with petroleum jelly and install washer over input shaft and into clutch retainer (Fig. 235). Use enough petroleum jelly to hold washer in place.

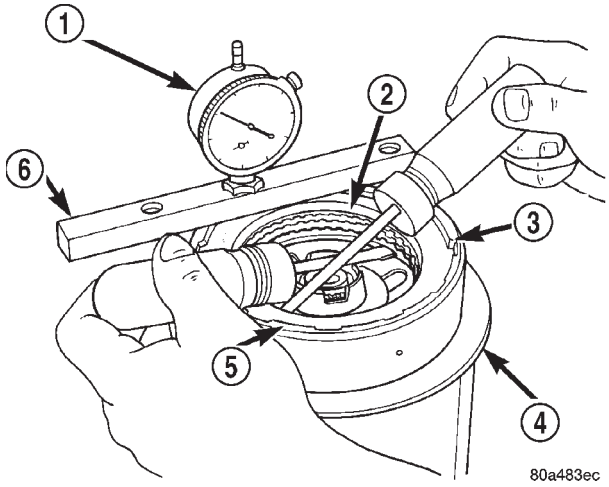

Fig. 234 Checking Rear Clutch Pack Clearance

1 - DIAL INDICATOR
2 - PRESSURE PLATE
3 - SNAP-RING
4 - STAND
5 - REAR CLUTCH
6 - GAUGE BAR

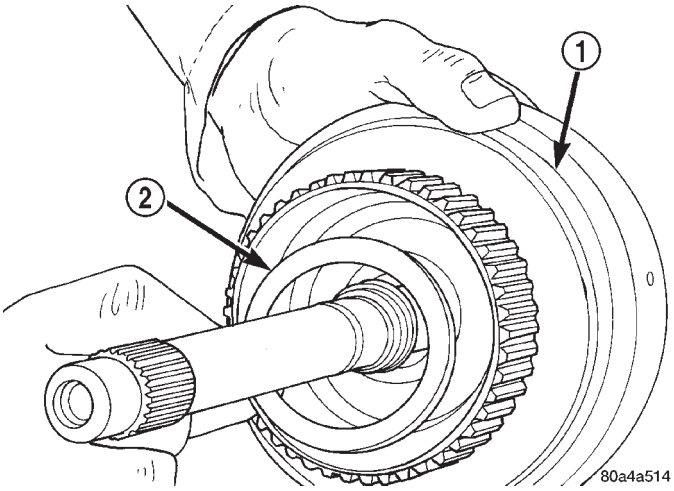

Fig. 235 Installing Rear Clutch Thrust Washer

1 - REAR CLUTCH RETAINER
2 - REAR CLUTCH THRUST WASHER

REAR SERVO

DESCRIPTION

The rear (low/reverse) servo consists of a single stage or diameter piston and a spring loaded plug. The spring is used to cushion the application of the rear (low/reverse) band.

OPERATION

While in the de-energized state (no pressure applied), the piston is held up in its bore by the piston spring. The plug is held down in its bore, in the piston, by the plug spring. When pressure is applied to the top of the piston, the plug is forced down in its bore, taking up any clearance. As the piston moves, it causes the plug spring to compress, and the piston moves down over the plug. The piston continues to move down until it hits the shoulder of the plug and fully applies the band. The period of time from the initial application, until the piston is against the shoulder of the plug, represents a reduced shocking of the band that cushions the shift.

DISASSEMBLY

(1) Remove small snap-ring and remove plug and spring from servo piston (Fig. 236).

(2) Remove and discard servo piston seal ring.

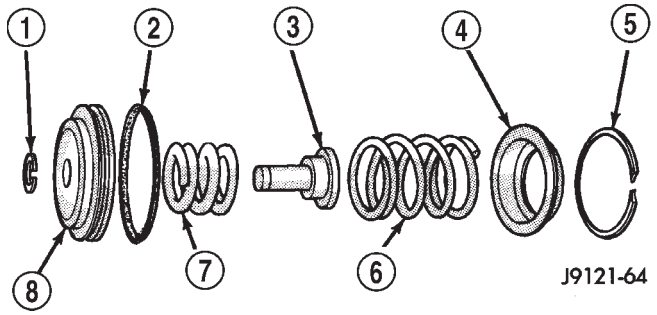

Fig. 236 Rear Servo Components

1 - SNAP-RING
2 - PISTON SEAL
3 - PISTON PLUG
4 - SPRING RETAINER
5 - SNAP-RING
6 - PISTON SPRING
7 - CUSHION SPRING
8 - PISTON

CLEANING

Remove and discard the servo piston seal ring (Fig. 237). Then clean the servo components with solvent and dry with compressed air. Replace either spring if collapsed, distorted or broken. Replace the plug and piston if cracked, bent, or worn. Discard the servo snap-rings and use new ones at assembly.

REAR SERVO (Continued)

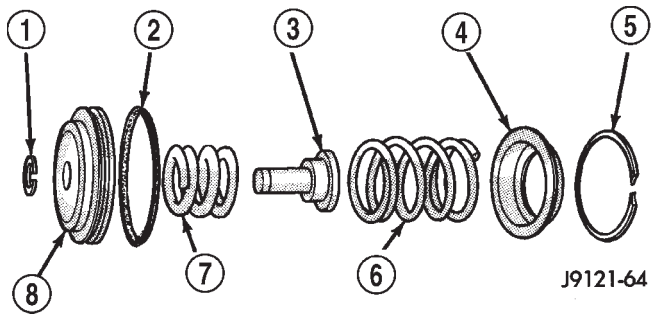

Fig. 237 Rear Servo Components

1 - SNAP-RING
2 - PISTON SEAL
3 - PISTON PLUG
4 - SPRING RETAINER
5 - SNAP-RING
6 - PISTON SPRING
7 - CUSHION SPRING
8 - PISTON

ASSEMBLY

(1) Lubricate piston and guide seals (Fig. 238) with petroleum jelly. Lubricate other servo parts with Mopar® ATF +4, type 9602, transmission fluid.

(2) Install new seal ring on servo piston.

(3) Assemble piston, plug, spring and new snap-ring.

(4) Lubricate piston seal lip with petroleum jelly.

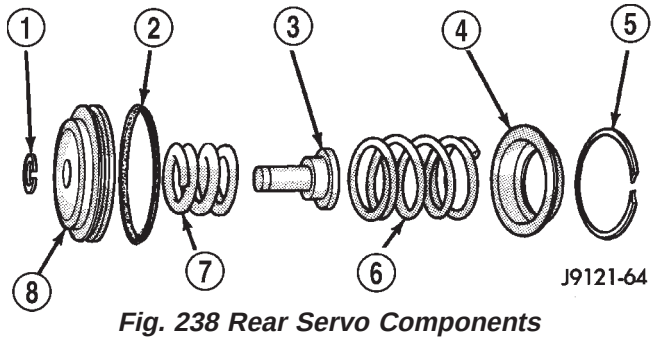

Fig. 238 Rear Servo Components

1 - SNAP-RING
2 - PISTON SEAL
3 - PISTON PLUG
4 - SPRING RETAINER
5 - SNAP-RING
6 - PISTON SPRING
7 - CUSHION SPRING
8 - PISTON

SHIFT MECHANISM

DESCRIPTION

The gear shift mechanism provides six shift positions which are:

- PARK (P)
- REVERSE (R)
- NEUTRAL (N)
- DRIVE (D)
- Manual SECOND (2)
- Manual LOW (1)

OPERATION

Manual LOW (1) range provides first gear only. Overrun braking is also provided in this range. Manual SECOND (2) range provides first and second gear only.

DRIVE range provides first, second third and overdrive fourth gear ranges. The shift into overdrive fourth gear range occurs only after the transmission has completed the shift into D third gear range. No further movement of the shift mechanism is required to complete the 3-4 shift.

The fourth gear upshift occurs automatically when the overdrive selector switch is in the ON position. No upshift to fourth gear will occur if any of the following are true:

- The transmission fluid temperature is below 10° C (50° F) or above 121° C (250° F).
- The shift to third is not yet complete.
- Vehicle speed is too low for the 3-4 shift to occur.
- Battery temperature is below -5° C (23° F).

REMOVAL

(1) Remove any necessary console parts for access to shift lever assembly and shifter cables. (Refer to 23 - BODY/INTERIOR/FLOOR CONSOLE - REMOVAL)

(2) Shift transmission into PARK.

(3) Disconnect the transmission shift cable at shift lever and shifter assembly bracket (Fig. 239).

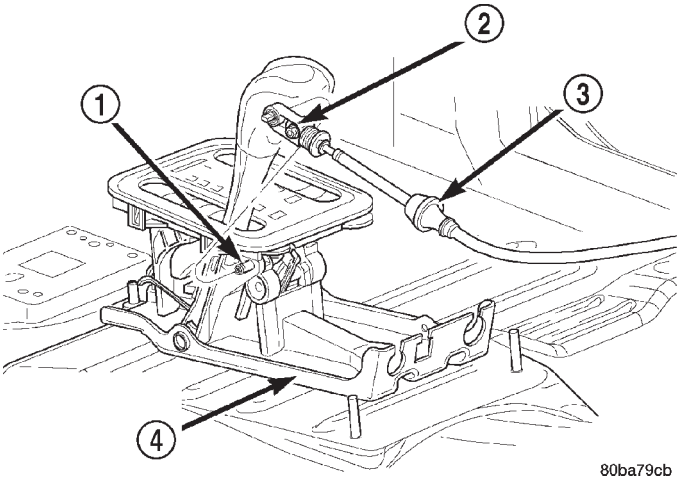

Fig. 239 Transmission Shift Cable

1 - SHIFT LEVER PIN
2 - ADJUSTMENT SCREW
3 - SHIFT CABLE
4 - SHIFTER ASSEMBLY BRACKET

SHIFT MECHANISM (Continued)

(4) Disconnect the brake transmission interlock cable from the shifter BTSI lever and the shifter assembly bracket (Fig. 240).

(5) Disconnect the transfer case shift cable from the transfer case shift lever pin (Fig. 241).

(6) Remove the clip holding the transfer case shift cable to the shifter assembly bracket.

(7) Remove the transfer case shift cable from the shifter assembly bracket.

(8) Disengage all wiring connectors from the shifter assembly.

(9) Remove all nuts holding the shifter assembly to the floor pan (Fig. 242).

(10) Remove the shifter assembly from the vehicle.

INSTALLATION

(1) Install shifter assembly onto the shifter assembly studs on the floor pan.

(2) Install the nuts to hold the shifter assembly onto the floor pan. Tighten nuts to 28 N·m (250 in.lbs.).

(3) Install wiring harness to the shifter assembly bracket. Engage any wire connectors removed from the shifter assembly.

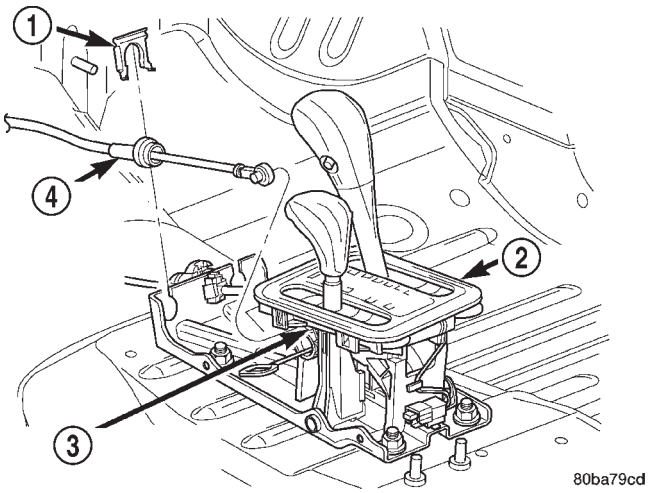

Fig. 241 Transfer Case Shift Cable

1 - CLIP
2 - SHIFTER
3 - TRANSFER CASE SHIFT LEVER PIN
4 - TRANSFER CASE SHIFT CABLE

(4) Install the transfer case shift cable to the shifter assembly bracket. Install clip to hold cable to the bracket.

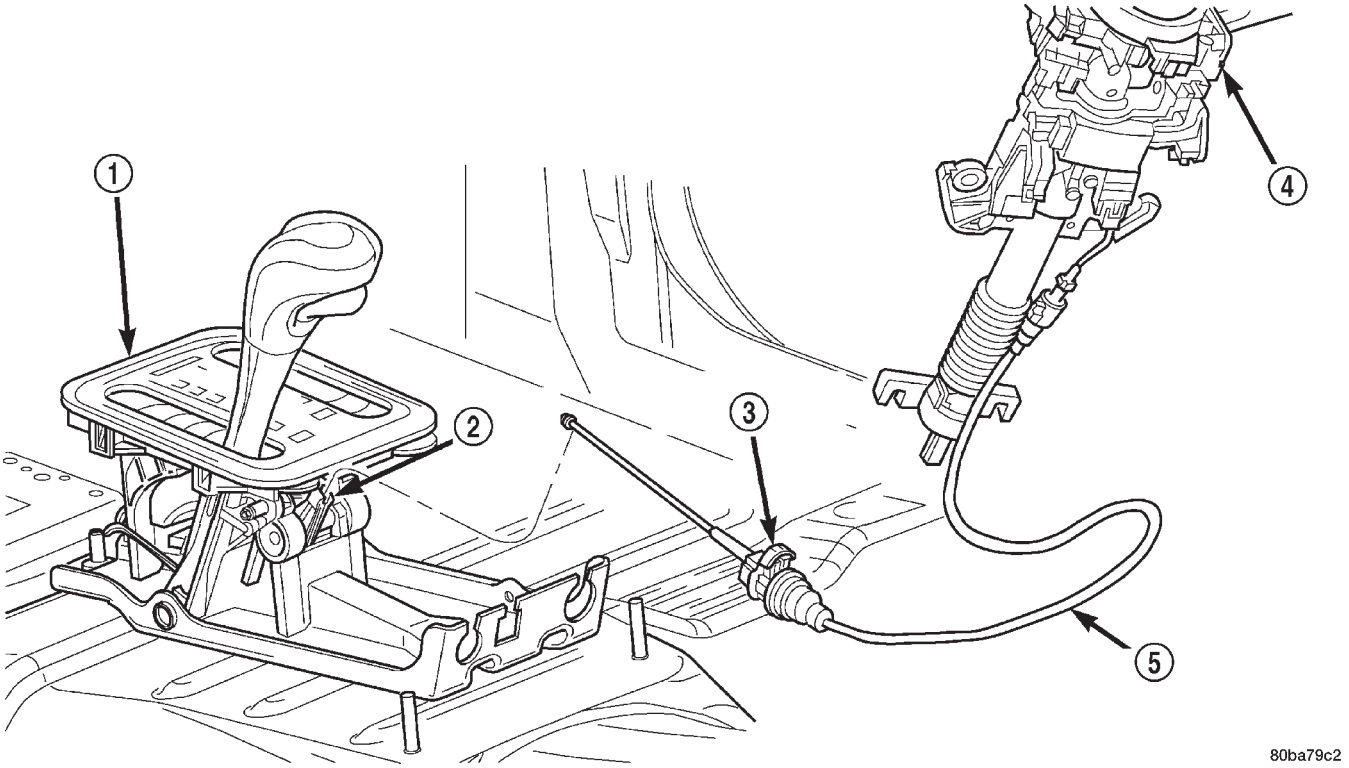

Fig. 240 Brake Transmission Interlock Cable

1 - SHIFT MECHANISM
2 - SHIFTER BTSI LEVER
3 - ADJUSTMENT CLIP
4 - STEERING COLUMN ASSEMBLY
5 - INTERLOCK CABLE

SHIFT MECHANISM (Continued)

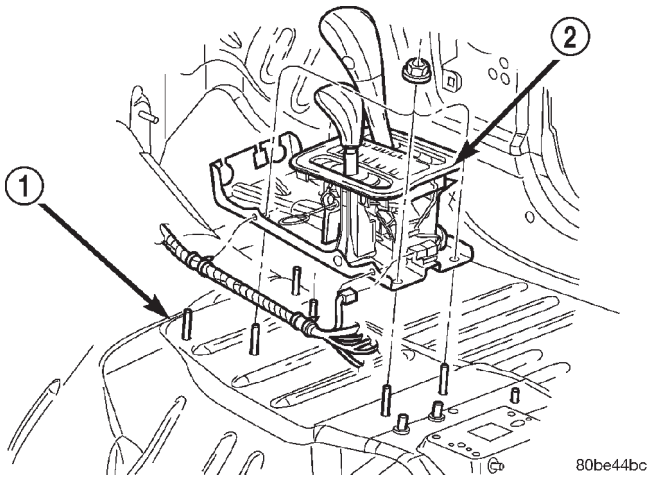

Fig. 242 Shifter Assembly

1 - FLOOR PAN
2 - SHIFTER ASSEMBLY

(5) Snap the transfer case shift cable onto the transfer case shift lever pin.

(6) Install the brake transmission interlock cable into the shifter assembly bracket and into the shifter BTSI lever.(Refer to 21 - TRANSMISSION/TRANSAXLE/AUTOMATIC/SHIFT INTERLOCK MECHANISM - ADJUSTMENTS)

(7) Install the shift cable to the shifter assembly bracket. Push cable into the bracket until secure.

(8) Place the floor shifter lever in park position.

(9) Loosen the adjustment screw on the shift cable.

(10) Snap the shift cable onto the shift lever pin.

(11) Verify that the shift lever is in the PARK position.

(12) Tighten the adjustment screw to 7 N·m (65 in.lbs.).

(13) Verify correct shifter operation.

(14) Install any console parts removed for access to shift lever assembly and shift cables. (Refer to 23 - BODY/INTERIOR/FLOOR CONSOLE - INSTALLATION)

SOLENOID

DESCRIPTION

The typical electrical solenoid used in automotive applications is a linear actuator. It is a device that produces motion in a straight line. This straight line motion can be either forward or backward in direction, and short or long distance.

A solenoid is an electromechanical device that uses a magnetic force to perform work. It consists of a coil of wire, wrapped around a magnetic core made from steel or iron, and a spring loaded, movable plunger, which performs the work, or straight line motion.

The solenoids used in transmission applications are attached to valves which can be classified as **normally open** or **normally closed**. The **normally open** solenoid valve is defined as a valve which allows hydraulic flow when no current or voltage is applied to the solenoid. The **normally closed** solenoid valve is defined as a valve which does not allow hydraulic flow when no current or voltage is applied to the solenoid. These valves perform hydraulic control functions for the transmission and must therefore be durable and tolerant of dirt particles. For these reasons, the valves have hardened steel poppets and ball valves. The solenoids operate the valves directly, which means that the solenoids must have very high outputs to close the valves against the sizable flow areas and line pressures found in current transmissions. Fast response time is also necessary to ensure accurate control of the transmission.

The strength of the magnetic field is the primary force that determines the speed of operation in a particular solenoid design. A stronger magnetic field will cause the plunger to move at a greater speed than a weaker one. There are basically two ways to increase the force of the magnetic field:

- Increase the amount of current applied to the coil or
- Increase the number of turns of wire in the coil.

The most common practice is to increase the number of turns by using thin wire that can completely fill the available space within the solenoid housing. The strength of the spring and the length of the plunger also contribute to the response speed possible by a particular solenoid design.

A solenoid can also be described by the method by which it is controlled. Some of the possibilities include variable force, pulse-width modulated, constant ON, or duty cycle. The variable force and pulse-width modulated versions utilize similar methods to control the current flow through the solenoid to position the solenoid plunger at a desired position somewhere between full ON and full OFF. The constant ON and duty cycled versions control the voltage across the solenoid to allow either full flow or no flow through the solenoid's valve.

OPERATION

When an electrical current is applied to the solenoid coil, a magnetic field is created which produces an attraction to the plunger, causing the plunger to move and work against the spring pressure and the load applied by the fluid the valve is controlling. The plunger is normally directly attached to the valve which it is to operate. When the current is removed from the coil, the attraction is removed and the plunger will return to its original position due to spring pressure.

SOLENOID (Continued)

The plunger is made of a conductive material and accomplishes this movement by providing a path for the magnetic field to flow. By keeping the air gap between the plunger and the coil to the minimum necessary to allow free movement of the plunger, the magnetic field is maximized.

SPEED SENSOR

DESCRIPTION

The speed sensor (Fig. 243) is located in the overdrive gear case. The sensor is positioned over the park gear and monitors transmission output shaft rotating speed.

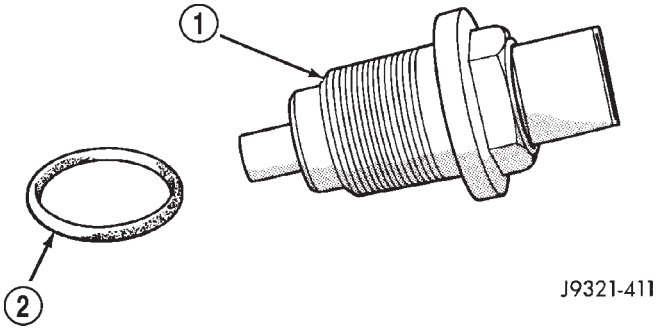

Fig. 243 Transmission Output Speed Sensor

1 - TRANSMISSION OUTPUT SHAFT SPEED SENSOR
2 - SEAL

OPERATION

Speed sensor signals are triggered by the park gear lugs as they rotate past the sensor pickup face. Input signals from the sensor are sent to the transmission control module for processing. The vehicle speed sensor also serves as a backup for the transmission speed sensor. Signals from this sensor are shared with the powertrain control module.

THROTTLE VALVE CABLE

DESCRIPTION

Transmission throttle valve cable adjustment is extremely important to proper operation. This adjustment positions the throttle valve, which controls shift speed, quality, and part-throttle downshift sensitivity.

If cable setting is too loose, early shifts and slippage between shifts may occur. If the setting is too tight, shifts may be delayed and part throttle downshifts may be very sensitive.

The transmission throttle valve is operated by a cam on the throttle lever. The throttle lever is operated by an adjustable cable (Fig. 244). The cable is attached to an arm mounted on the throttle lever shaft. A retaining clip at the engine-end of the cable is removed to provide for cable adjustment. The retaining clip is then installed back onto the throttle valve cable to lock in the adjustment.

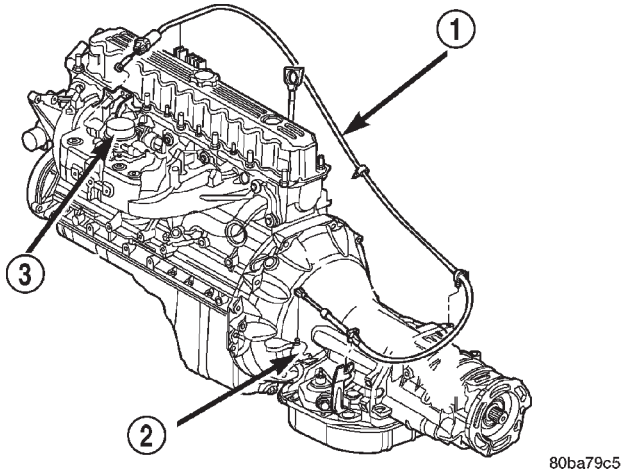

Fig. 244 Throttle Valve Cable

1 - THROTTLE VALVE CABLE
2 - THROTTLE VALVE LEVER
3 - THROTTLE BODY

ADJUSTMENTS - TRANSMISSION THROTTLE VALVE CABLE

A correctly adjusted throttle valve cable (Fig. 245) will cause the throttle lever on the transmission to move simultaneously with the throttle body lever from the idle position. Proper adjustment will allow simultaneous movement without causing the transmission throttle lever to either move ahead of, or lag behind the lever on the throttle body.

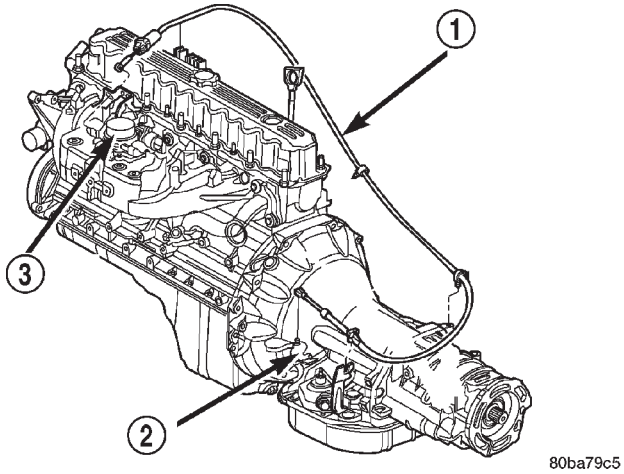

Fig. 245 Throttle Valve Cable

1 - THROTTLE VALVE CABLE
2 - THROTTLE VALVE LEVER
3 - THROTTLE BODY

THROTTLE VALVE CABLE (Continued)

ADJUSTMENT VERIFICATION

(1) Turn ignition key to OFF position.

(2) Remove air cleaner.

(3) Verify that lever on throttle body (Fig. 245) is at curb idle position. Then verify that the transmission throttle lever (Fig. 246) is also at idle (fully forward) position.

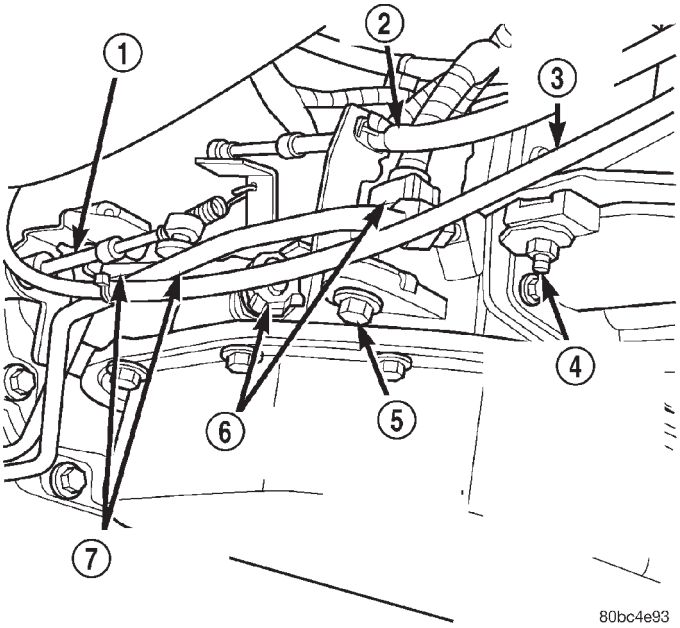

Fig. 246 Throttle Valve Cable at Transmission

1 - TRANSMISSION SHIFTER CABLE
2 - THROTTLE VALVE CABLE
3 - TRANSFER CASE SHIFTER CABLE
4 - TRANSFER CASE SHIFTER CABLE BRACKET RETAINING BOLT(S)
5 - THROTTLE VALVE CABLE BRACKET RETAINING BOLT
6 - ELECTRICAL CONNECTORS
7 - TRANSMISSION FLUID LINES

(4) Slide cable off attachment stud on throttle body lever.

(5) Compare position of cable end to attachment stud on throttle body lever:

- Cable end and attachment stud should be aligned (or centered on one another) to within 1 mm (0.039 in.) in either direction (Fig. 247).
- If cable end and attachment stud are misaligned (off center), cable will have to be adjusted as described in Throttle Valve Cable Adjustment procedure.

(6) Reconnect cable end to attachment stud. Then with aid of a helper, observe movement of transmission throttle lever and lever on throttle body.

- If both levers move simultaneously from idle to half-throttle and back to idle position, adjustment is correct.
- If transmission throttle lever moves ahead of, or lags behind throttle body lever, cable adjustment will be necessary. Or, if throttle body lever prevents transmission lever from returning to closed position, cable adjustment will be necessary.

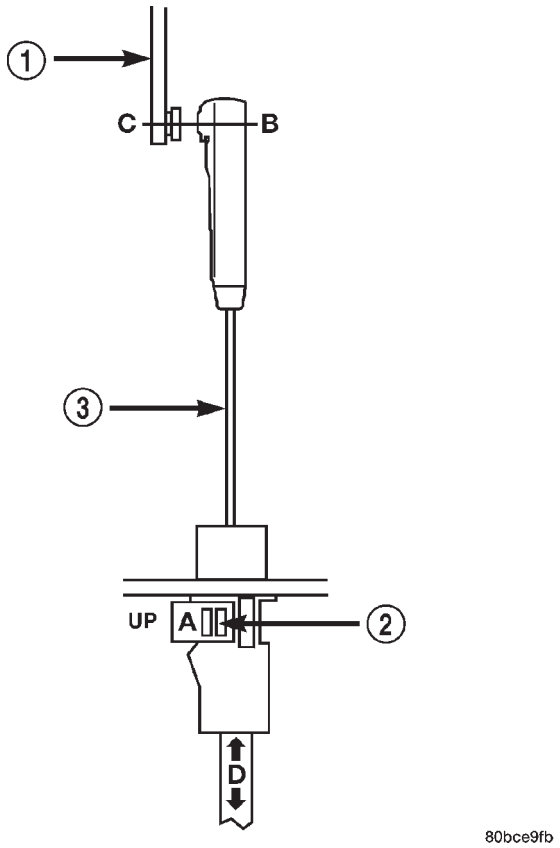

Fig. 247 Throttle Valve Cable at Throttle Linkage

1 - THROTTLE LINKAGE
2 - THROTTLE VALVE CABLE LOCKING CLIP
3 - THROTTLE VALVE CABLE

ADJUSTMENT PROCEDURE

(1) Turn ignition switch to OFF position.

(2) Remove air cleaner if necessary.

(3) Disconnect cable end from attachment stud. **Carefully slide cable off stud. Do not pry or pull cable off.**

(4) Verify that transmission throttle lever is in fully closed position. Then be sure lever on throttle body is at curb idle position.

(5) Insert a small screwdriver under edge of retaining clip and remove retaining clip.

(6) Center cable end on attachment stud to within 1 mm (0.039 in.) (Fig. 247).

NOTE: Be sure that as the cable is pulled forward and centered on the throttle lever stud, the cable housing moves smoothly with the cable. Due to the angle at which the cable housing enters the spring housing, the cable housing may bind slightly and create an incorrect adjustment.

THROTTLE VALVE CABLE (Continued)

(7) Install retaining clip onto cable housing.

(8) Check cable adjustment. Verify transmission throttle lever and lever on throttle body move simultaneously.

TORQUE CONVERTER

DESCRIPTION

The torque converter (Fig. 248) is a hydraulic device that couples the engine crankshaft to the transmission. The torque converter consists of an outer shell with an internal turbine, a stator, an overrunning clutch, an impeller and an electronically applied converter clutch. The converter clutch provides reduced engine speed and greater fuel economy when engaged. Clutch engagement also provides reduced transmission fluid temperatures. The converter clutch engages in third gear. The torque converter hub drives the transmission oil (fluid) pump.

The torque converter is a sealed, welded unit that is not repairable and is serviced as an assembly.

CAUTION: The torque converter must be replaced if a transmission failure resulted in large amounts of metal or fiber contamination in the fluid. If the fluid is contaminated, flush the all transmission fluid cooler(s) and lines.

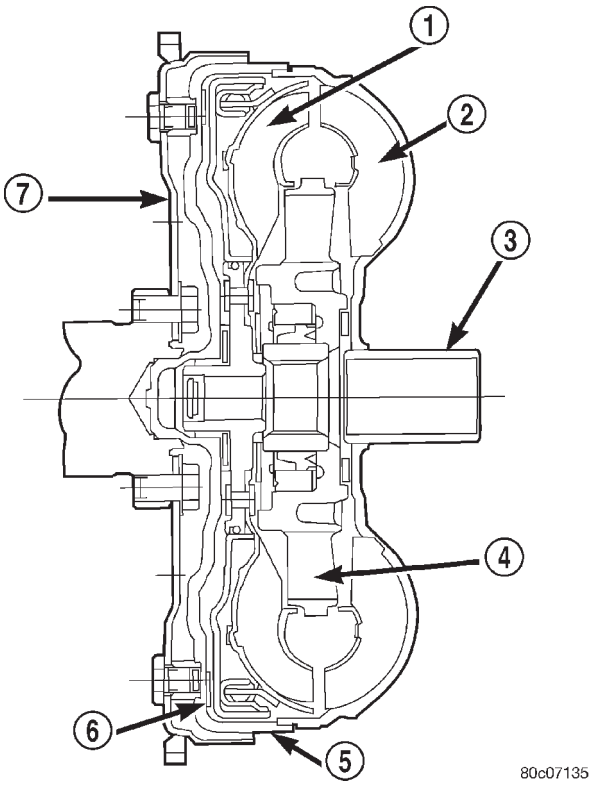

Fig. 248 Torque Converter Assembly

1 - TURBINE
2 - IMPELLER
3 - HUB
4 - STATOR
5 - FRONT COVER
6 - CONVERTER CLUTCH DISC
7 - DRIVE PLATE

TORQUE CONVERTER (Continued)

IMPELLER

The impeller (Fig. 249) is an integral part of the converter housing. The impeller consists of curved blades placed radially along the inside of the housing on the transmission side of the converter. As the converter housing is rotated by the engine, so is the impeller, because they are one and the same and are the driving members of the system.

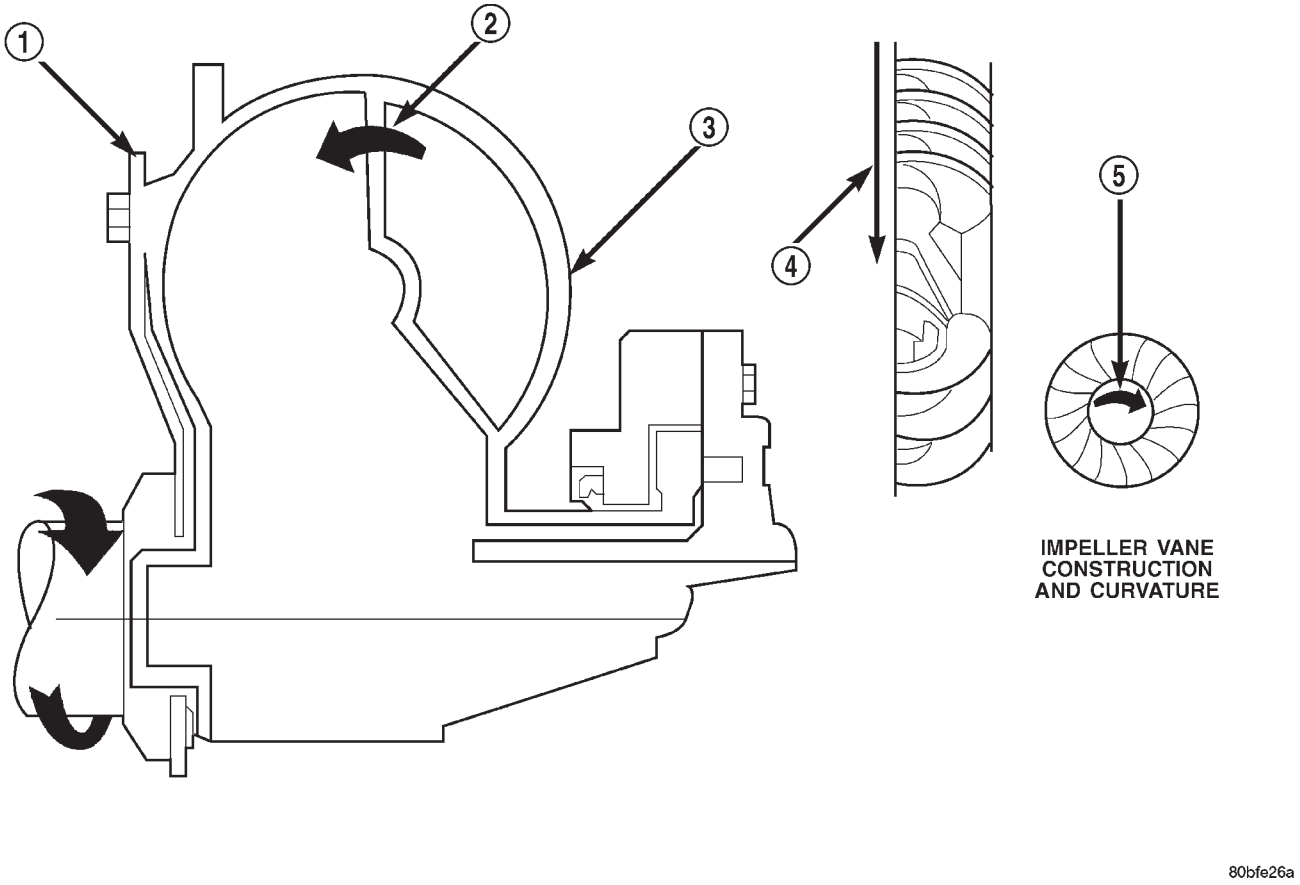

Fig. 249 Impeller

1 - ENGINE FLEXPLATE
2 - OIL FLOW FROM IMPELLER SECTION INTO TURBINE SECTION
3 - IMPELLER VANES AND COVER ARE INTEGRAL
4 - ENGINE ROTATION
5 - ENGINE ROTATION

TORQUE CONVERTER (Continued)

TURBINE

The turbine (Fig. 250) is the output, or driven, member of the converter. The turbine is mounted within the housing opposite the impeller, but is not attached to the housing. The input shaft is inserted through the center of the impeller and splined into the turbine. The design of the turbine is similar to the impeller, except the blades of the turbine are curved in the opposite direction.

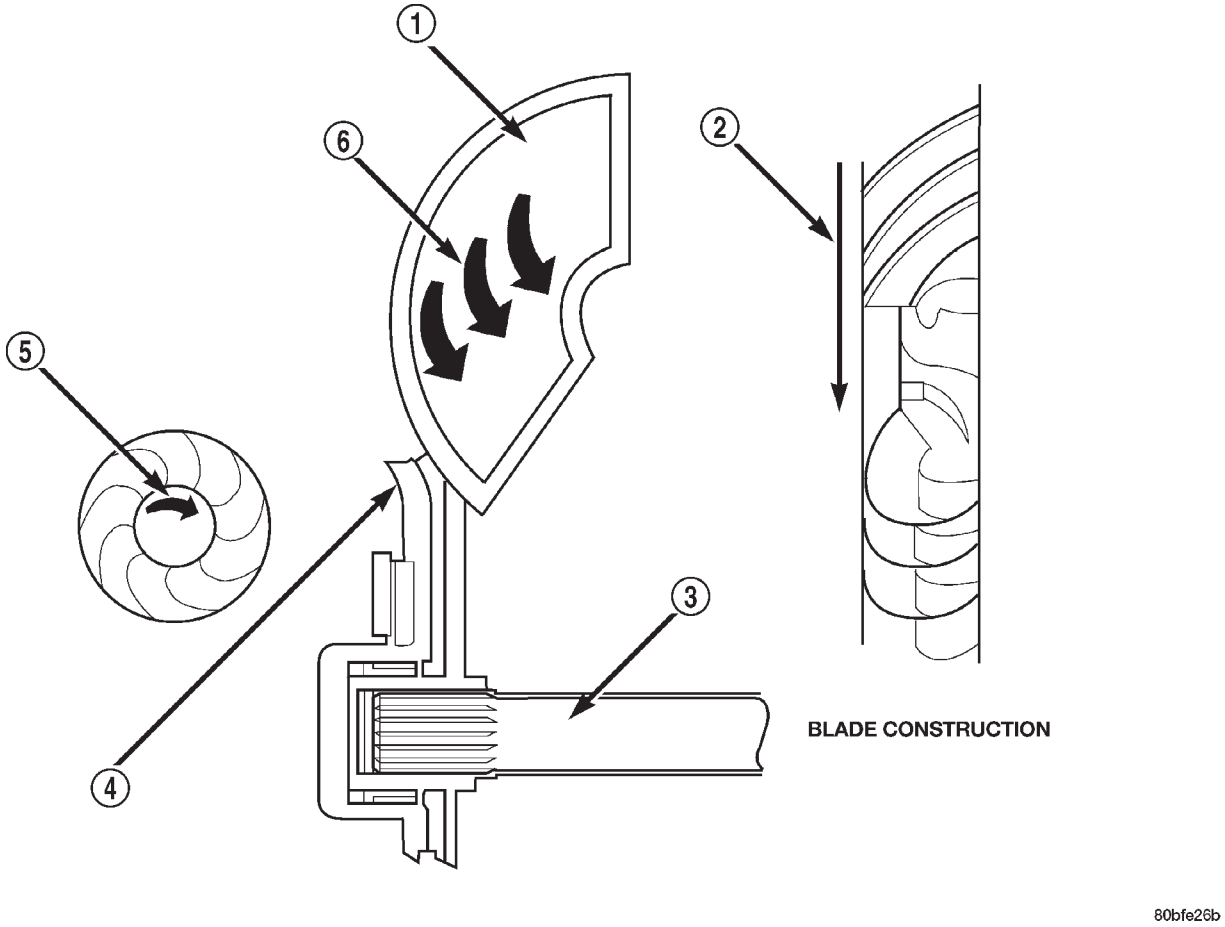

Fig. 250 Turbine

1 - TURBINE VANE
2 - ENGINE ROTATION
3 - INPUT SHAFT
4 - PORTION OF TORQUE CONVERTER COVER
5 - ENGINE ROTATION
6 - OIL FLOW WITHIN TURBINE SECTION

TORQUE CONVERTER (Continued)

STATOR

The stator assembly (Fig. 251) is mounted on a stationary shaft which is an integral part of the oil pump. The stator is located between the impeller and turbine within the torque converter case (Fig. 252). The stator contains an over-running clutch, which allows the stator to rotate only in a clockwise direction. When the stator is locked against the over-running clutch, the torque multiplication feature of the torque converter is operational.

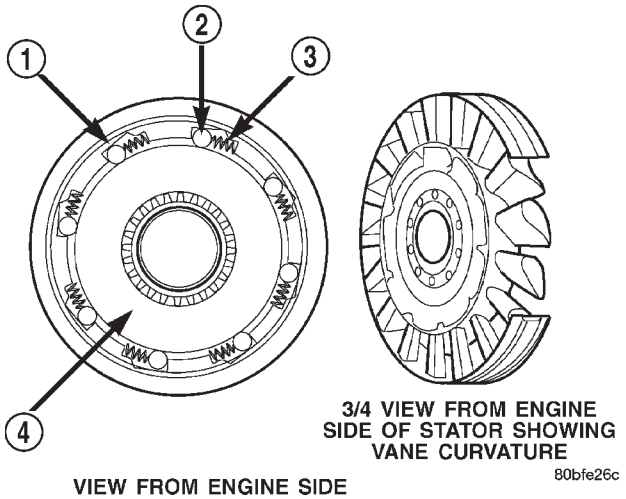

Fig. 251 Stator Components

1 - CAM (OUTER RACE)
2 - ROLLER
3 - SPRING
4 - INNER RACE

TORQUE CONVERTER CLUTCH (TCC)

The TCC (Fig. 253) was installed to improve the efficiency of the torque converter that is lost to the slippage of the fluid coupling. Although the fluid coupling provides smooth, shock-free power transfer, it is natural for all fluid couplings to slip. If the impeller and turbine were mechanically locked together, a zero slippage condition could be obtained. A hydraulic piston was added to the turbine, and a friction material was added to the inside of the front cover to provide this mechanical lock-up.

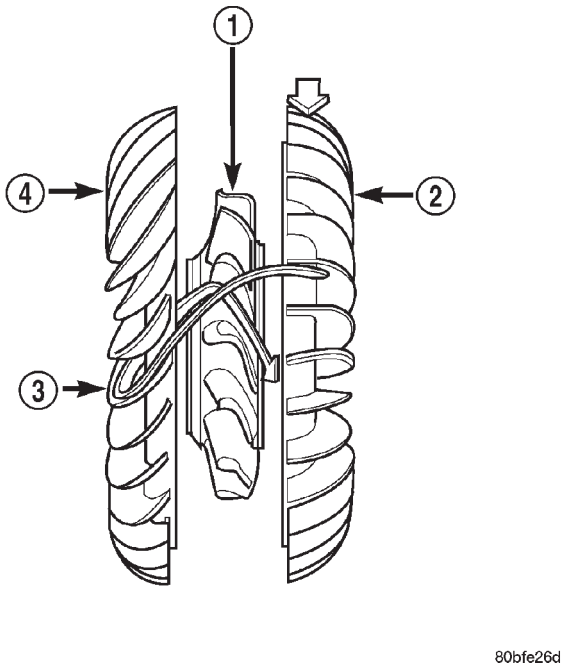

Fig. 252 Stator Location

1 - STATOR
2 - IMPELLER
3 - FLUID FLOW
4 - TURBINE

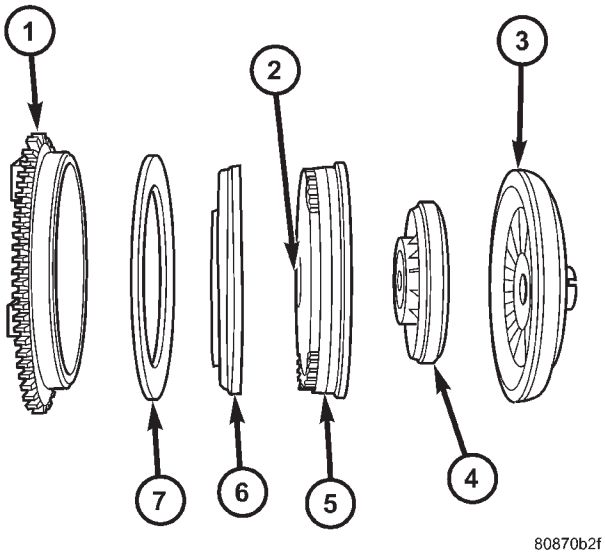

Fig. 253 Torque Converter Clutch (TCC)

1 - FRONT COVER
2 - THRUST WASHER ASSEMBLY
3 - IMPELLER
4 - STATOR
5 - TURBINE
6 - PISTON
7 - FRICTION DISC

TORQUE CONVERTER (Continued)

OPERATION

The converter impeller (Fig. 254) (driving member), which is integral to the converter housing and bolted to the engine drive plate, rotates at engine speed. The converter turbine (driven member), which reacts from fluid pressure generated by the impeller, rotates and turns the transmission input shaft.

TURBINE

As the fluid that was put into motion by the impeller blades strikes the blades of the turbine, some of the energy and rotational force is transferred into the turbine and the input shaft. This causes both of them (turbine and input shaft) to rotate in a clockwise direction following the impeller. As the fluid is leaving the trailing edges of the turbine's blades it continues in a "hindering" direction back toward the impeller. If the fluid is not redirected before it strikes the impeller, it will strike the impeller in such a direction that it would tend to slow it down.

STATOR

Torque multiplication is achieved by locking the stator's over-running clutch to its shaft (Fig. 255). Under stall conditions (the turbine is stationary), the oil leaving the turbine blades strikes the face of the stator blades and tries to rotate them in a counter-clockwise direction. When this happens the overrunning clutch of the stator locks and holds the stator from rotating. With the stator locked, the oil strikes the stator blades and is redirected into a "helping" direction before it enters the impeller. This circulation of oil from impeller to turbine, turbine to stator, and stator to impeller, can produce a maximum torque multiplication of about 2.4:1. As the turbine begins to match the speed of the impeller, the fluid that was hitting the stator in such as way as to cause it to lock-up is no longer doing so. In this condition of operation, the stator begins to free wheel and the converter acts as a fluid coupling.

REMOVAL

(1) Remove transmission and torque converter from vehicle.

(2) Place a suitable drain pan under the converter housing end of the transmission.

CAUTION: Verify that transmission is secure on the lifting device or work surface, the center of gravity of the transmission will shift when the torque converter is removed creating an unstable condition. The torque converter is a heavy unit. Use caution when separating the torque converter from the transmission.

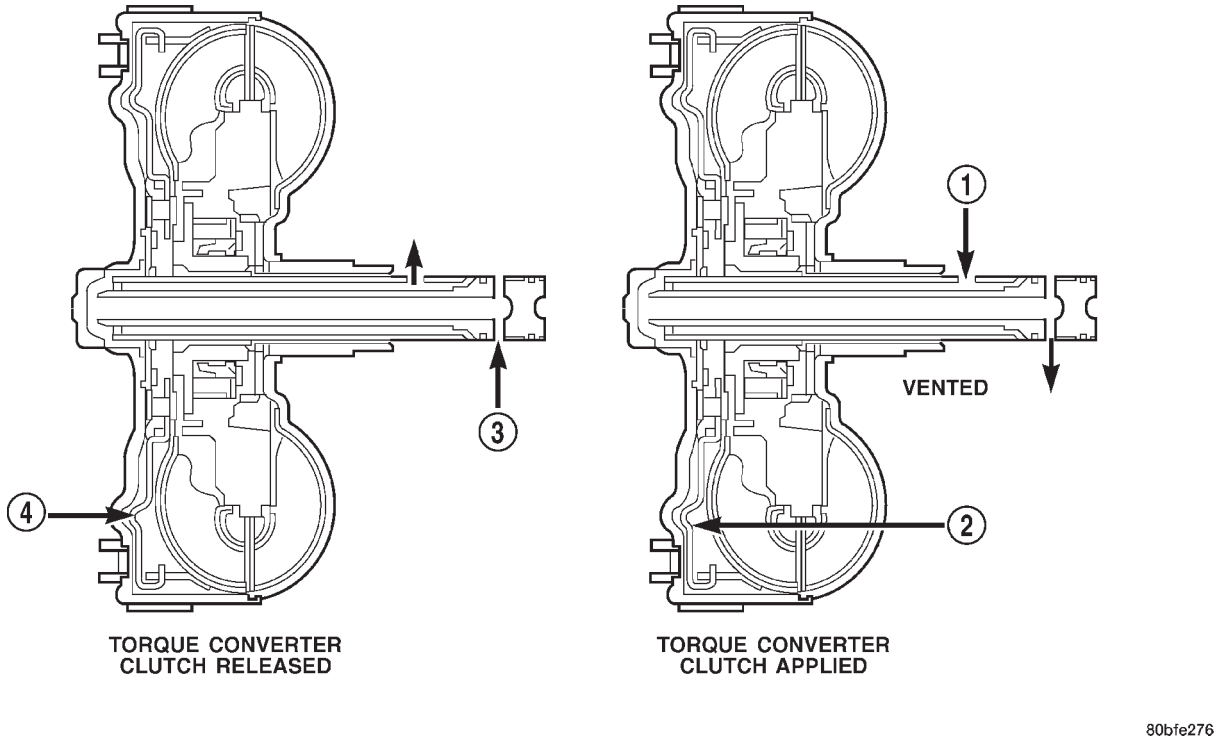

Fig. 254 Torque Converter Fluid Operation

1 - APPLY PRESSURE
2 - THE PISTON MOVES SLIGHTLY FORWARD
3 - RELEASE PRESSURE
4 - THE PISTON MOVES SLIGHTLY REARWARD

TORQUE CONVERTER (Continued)

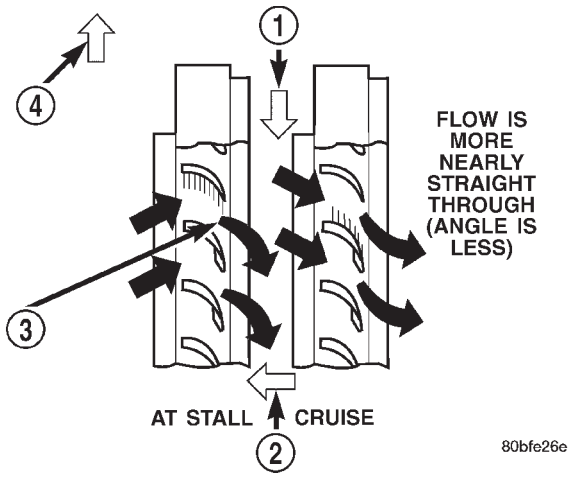

Fig. 255 Stator Operation

1 - DIRECTION STATOR WILL FREE WHEEL DUE TO OIL PUSHING ON BACKSIDE OF VANES
2 - FRONT OF ENGINE
3 - INCREASED ANGLE AS OIL STRIKES VANES
4 - DIRECTION STATOR IS LOCKED UP DUE TO OIL PUSHING AGAINST STATOR VANES

(3) Pull the torque converter forward until the center hub clears the oil pump seal.

(4) Separate the torque converter from the transmission.

INSTALLATION

Check converter hub and drive notches for sharp edges, burrs, scratches, or nicks. Polish the hub and notches with 320/400 grit paper or crocus cloth if necessary. The hub must be smooth to avoid damaging the pump seal at installation.

(1) Lubricate oil pump seal lip with transmission fluid.

(2) Place torque converter in position on transmission.

CAUTION: Do not damage oil pump seal or bushing while inserting torque converter into the front of the transmission.

(3) Align torque converter to oil pump seal opening.

(4) Insert torque converter hub into oil pump.

(5) While pushing torque converter inward, rotate converter until converter is fully seated in the oil pump gears.

(6) Check converter seating with a scale and straightedge (Fig. 256). Surface of converter lugs should be 1/2 in. to rear of straightedge when converter is fully seated.

(7) If necessary, temporarily secure converter with C-clamp attached to the converter housing.

(8) Install the transmission in the vehicle.

(9) Fill the transmission with the recommended fluid.

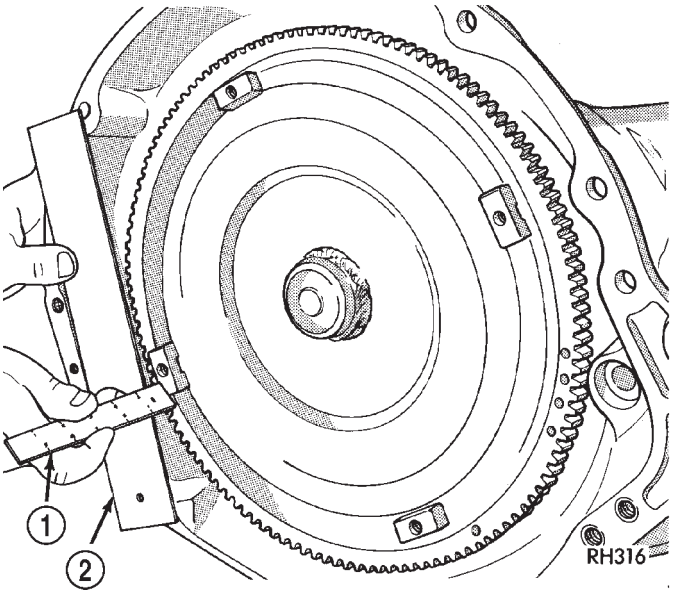

Fig. 256 Checking Torque Converter Seating - Typical

1 - SCALE
2 - STRAIGHTEDGE

TORQUE CONVERTER DRAINBACK VALVE

DESCRIPTION

The drainback valve is located in the transmission cooler outlet (pressure) line.

OPERATION

The valve prevents fluid from draining from the converter into the cooler and lines when the vehicle is shut down for lengthy periods. Production valves have a hose nipple at one end, while the opposite end is threaded for a flare fitting. All valves have an arrow (or similar mark) to indicate direction of flow through the valve.

STANDARD PROCEDURES - TORQUE CONVERTER DRAINBACK VALVE

The converter drainback check valve is located in the cooler outlet (pressure) line near the radiator tank. The valve prevents fluid drainback when the vehicle is parked for lengthy periods. The valve check ball is spring loaded and has an opening pressure of approximately 2 psi.

The valve is serviced as an assembly; it is not repairable. Do not clean the valve if restricted, or contaminated by sludge, or debris. If the valve fails, or if a transmission malfunction occurs that gener-

TORQUE CONVERTER DRAINBACK VALVE (Continued)

ates significant amounts of sludge and/or clutch particles and metal shavings, the valve must be replaced.

The valve must be removed whenever the cooler and lines are reverse flushed. The valve can be flow tested when necessary. The procedure is exactly the same as for flow testing a cooler.

If the valve is restricted, installed backwards, or in the wrong line, it will cause an overheating condition and possible transmission failure.

CAUTION: The drainback valve is a one-way flow device. It must be properly oriented in terms of flow direction for the cooler to function properly. The valve must be installed in the pressure line. Otherwise flow will be blocked and would cause an overheating condition and eventual transmission failure.

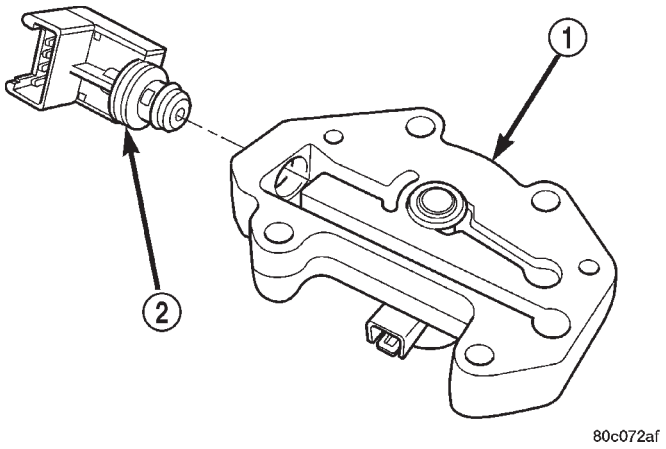

Fig. 257 Governor Pressure Sensor

1 - GOVERNOR BODY
2 - GOVERNOR PRESSURE SENSOR/TRANSMISSION FLUID TEMPERATURE THERMISTOR

TRANSMISSION TEMPERATURE SENSOR

DESCRIPTION

Transmission fluid temperature readings are supplied to the transmission control module by the thermistor (Fig. 257). The temperature readings are used to control engagement of the fourth gear overdrive clutch, the converter clutch, and governor pressure. Normal resistance value for the thermistor at room temperature is approximately 1000 ohms.

The thermistor is part of the governor pressure sensor assembly and is immersed in transmission fluid at all times.

OPERATION

The PCM prevents engagement of the converter clutch and overdrive clutch, when fluid temperature is below approximately 10°C (50°F).

If fluid temperature exceeds 126°C (260°F), the PCM causes a 4-3 downshift and engage the converter clutch. Engagement is according to the third gear converter clutch engagement schedule.

The overdrive OFF lamp in the instrument panel illuminates when the shift back to third occurs. The transmission will not allow fourth gear operation until fluid temperature decreases to approximately 110°C (230°F).

VALVE BODY

DESCRIPTION

The valve body consists of a cast aluminum valve body, a separator plate, and transfer plate. The valve body contains valves and check balls that control fluid delivery to the torque converter clutch, bands, and frictional clutches. The valve body contains the following components (Fig. 258), (Fig. 259), (Fig. 260), and (Fig. 261):

- Regulator valve
- Regulator valve throttle pressure plug
- Line pressure plug and sleeve
- Kickdown valve
- Kickdown limit valve
- 1-2 shift valve
- 1-2 control valve
- 2-3 shift valve
- 2-3 governor plug
- 3-4 shift valve
- 3-4 timing valve
- 3-4 quick fill valve
- 3-4 accumulator
- Throttle valve
- Throttle pressure plug
- Switch valve
- Manual valve
- Converter clutch lock-up valve
- Converter clutch lock-up timing Valve
- Shuttle valve
- Shuttle valve throttle plug
- Boost Valve
- 10 check balls

By adjusting the spring pressure acting on the regulator valve, transmission line pressure can be adjusted.

VALVE BODY (Continued)

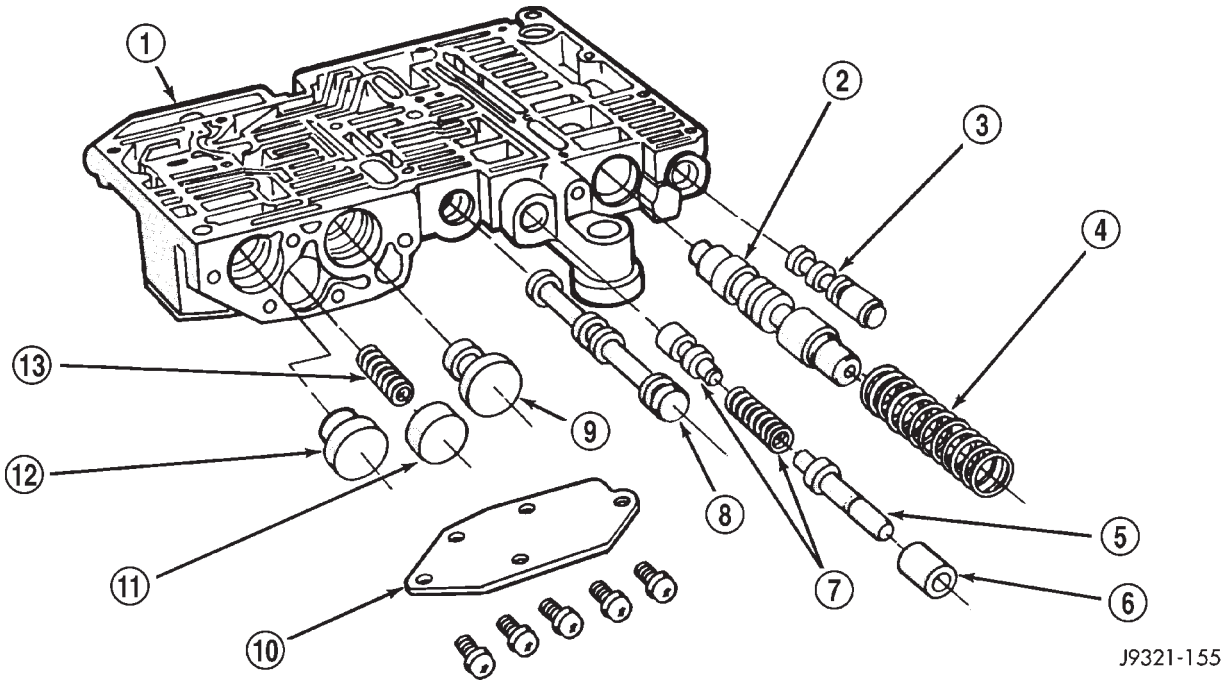

Fig. 258 Upper Housing Control Valve Locations

1 - UPPER HOUSING
2 - REGULATOR VALVE
3 - SWITCH VALVE
4 - REGULATOR VALVE SPRING
5 - KICKDOWN VALVE
6 - KICKDOWN DETENT
7 - THROTTLE VALVE AND SPRING
8 - MANUAL VALVE
9 - 1-2 GOVERNOR PLUG
10 - GOVERNOR PLUG COVER
11 - THROTTLE PLUG
12 - 2-3 GOVERNOR PLUG
13 - SHUTTLE VALVE PRIMARY SPRING

VALVE BODY (Continued)

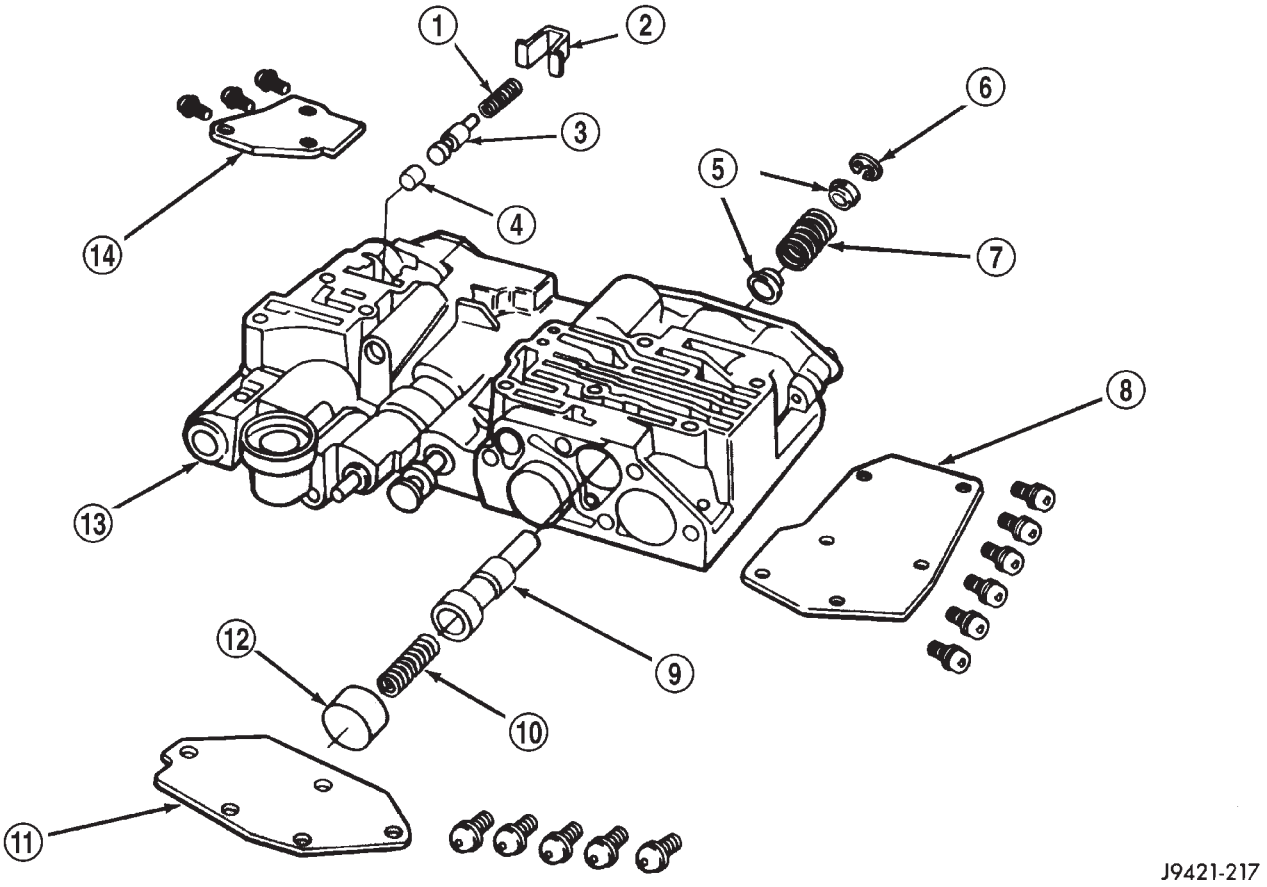

Fig. 259 Shuttle and Boost Valve Locations

1 - SPRING
2 - RETAINER
3 - BOOST VALVE
4 - BOOST VALVE PLUG
5 - SPRING GUIDES
6 - E-CLIP
7 - SHUTTLE VALVE SECONDARY SPRING
8 - SHUTTLE VALVE COVER
9 - SHUTTLE VALVE
10 - SHUTTLE VALVE PRIMARY SPRING
11 - GOVERNOR PLUG COVER
12 - THROTTLE PLUG
13 - UPPER HOUSING
14 - BOOST VALVE COVER

VALVE BODY (Continued)

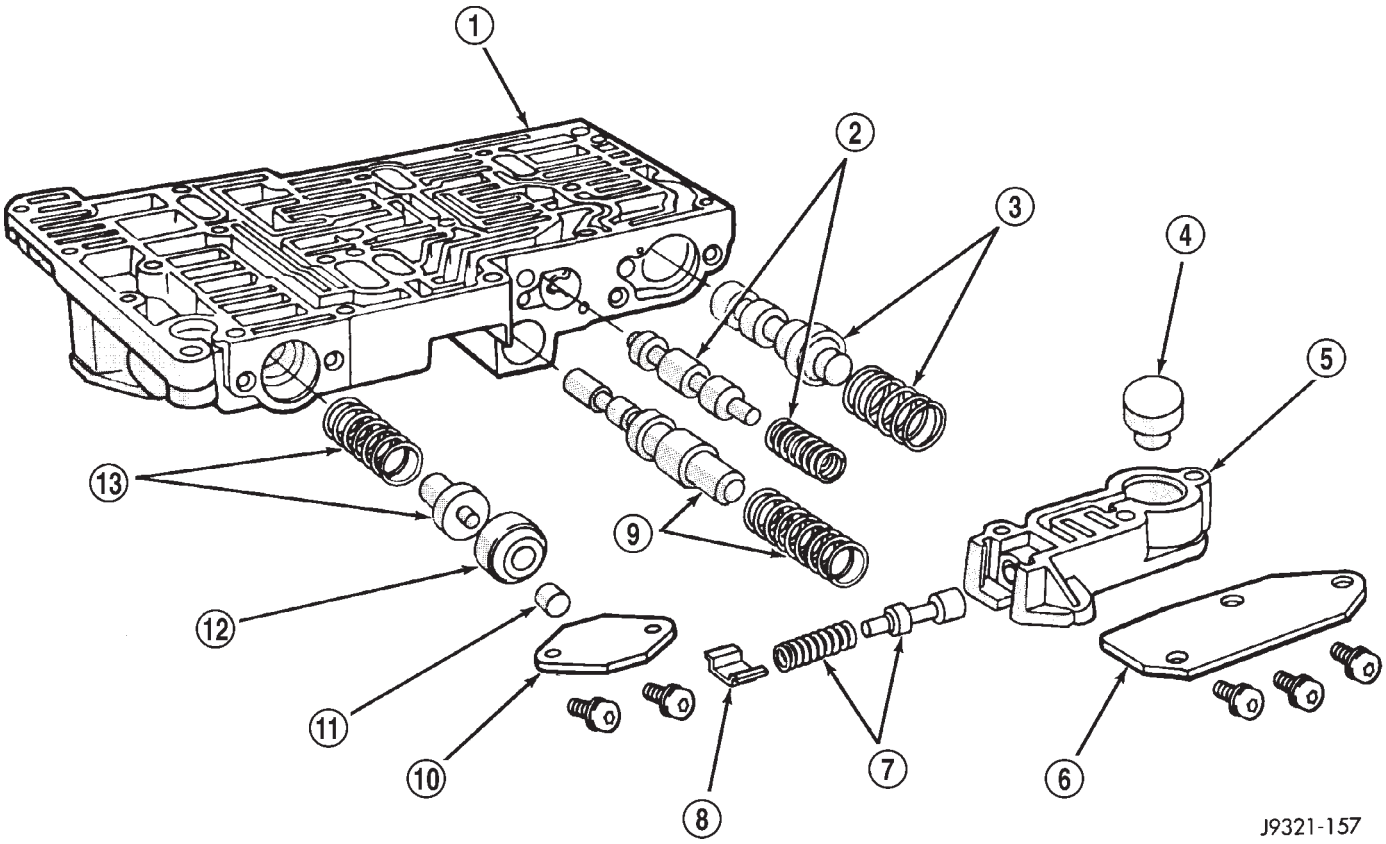

Fig. 260 Upper Housing Shift Valve and Pressure Plug Locations

1 - UPPER HOUSING
2 - 1-2 SHIFT VALVE AND SPRING
3 - 2-3 SHIFT VALVE AND SPRING
4 - 2-3 THROTTLE PLUG
5 - LIMIT VALVE HOUSING
6 - LIMIT VALVE COVER
7 - LIMIT VALVE AND SPRING
8 - RETAINER
9 - 1-2 SHIFT CONTROL VALVE AND SPRING
10 - PRESSURE PLUG COVER
11 - LINE PRESSURE PLUG
12 - PLUG SLEEVE
13 - THROTTLE PRESSURE SPRING AND PLUG

VALVE BODY (Continued)

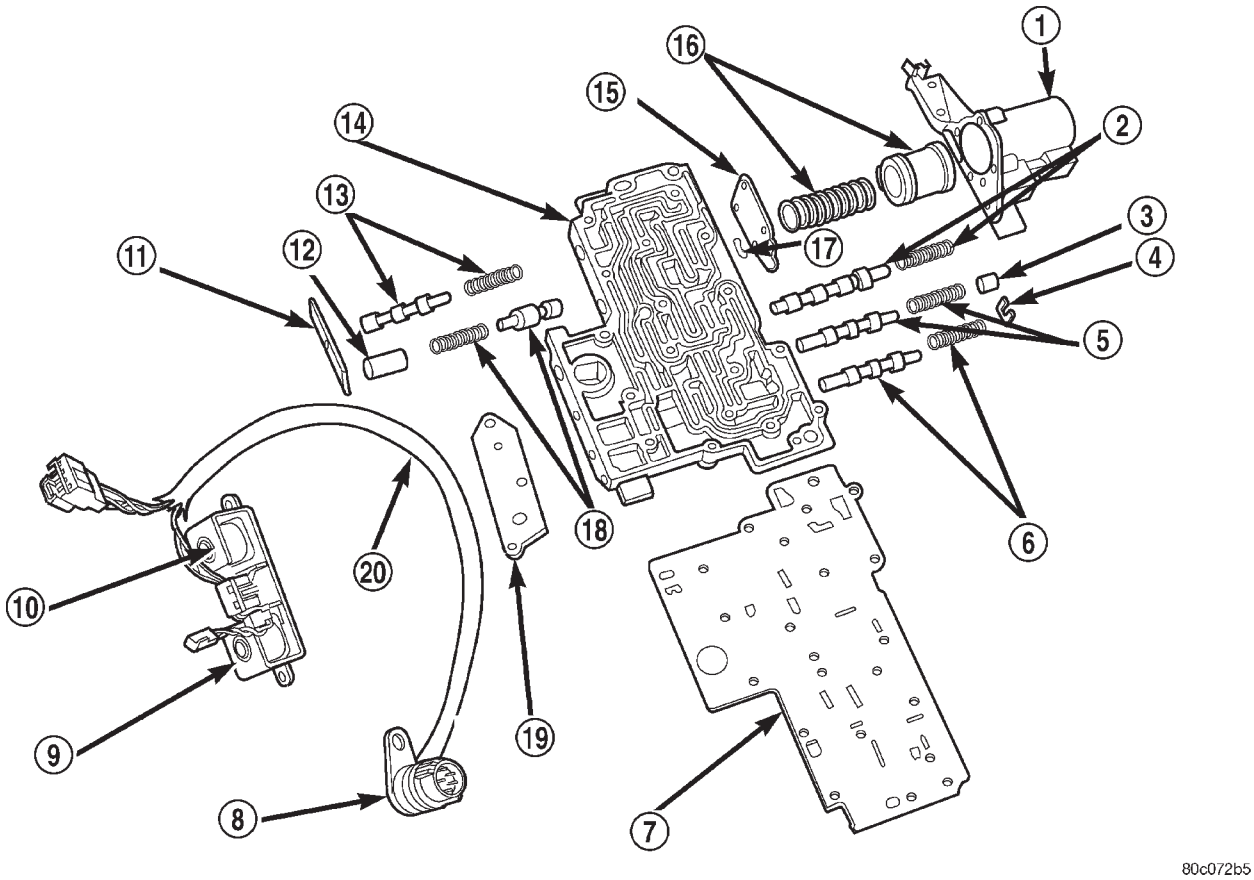

Fig. 261 Lower Housing Shift Valves and Springs

1 - 3-4 ACCUMULATOR HOUSING
2 - 3-4 SHIFT VALVE AND SPRING
3 - PLUG
4 - SPRING RETAINER
5 - CONVERTER CLUTCH VALVE AND SPRING
6 - CONVERTER CLUTCH TIMING VALVE AND SPRING
7 - OVERDRIVE SEPARATOR PLATE
8 - CASE CONNECTOR
9 - CONVERTER CLUTCH SOLENOID
10 - OVERDRIVE SOLENOID
11 - TIMING VALVE COVER
12 - PLUG
13 - 3-4 TIMING VALVE AND SPRING
14 - LOWER HOUSING
15 - ACCUMULATOR END PLATE
16 - 3-4 ACCUMULATOR PISTON AND SPRING
17 - E-CLIP
18 - 3-4 QUICK FILL SPRING AND VALVE
19 - SOLENOID GASKET
20 - HARNESS

VALVE BODY (Continued)

OPERATION

NOTE: Refer to the Hydraulic Schematics for a visual aid in determining valve location, operation and design.

REGULATOR VALVE

The pressure regulator valve is needed to control the hydraulic pressure within the system and reduce the amount of heat produced in the fluid. The pressure regulator valve is located in the valve body near the manual valve. The pressure regulator valve train controls the maximum pressure in the lines by metering the dumping of fluid back into the sump. Regulated pressure is referred to as “line pressure.”

The regulator valve (Fig. 262) has a spring on one end that pushes the valve to the left. This closes a dump (vent) that is used to lower pressure. The closing of the dump will cause the oil pressure to increase. Oil pressure on the opposite end of the valve pushes the valve to the right, opening the dump and lowering oil pressure. The result is spring pressure working against oil pressure to maintain the oil at specific pressures. With the engine running, fluid flows from the pump to the pressure regulator valve, manual valve, and the interconnected circuits. As fluid is sent through passages to the regulator valve, the pressure pushes the valve to the right against the large spring. It is also sent to the reaction areas on the left side of the throttle pressure plug and the line pressure plug. With the gear selector in the PARK position, fluid recirculates through the regulator and manual valves back to the sump.

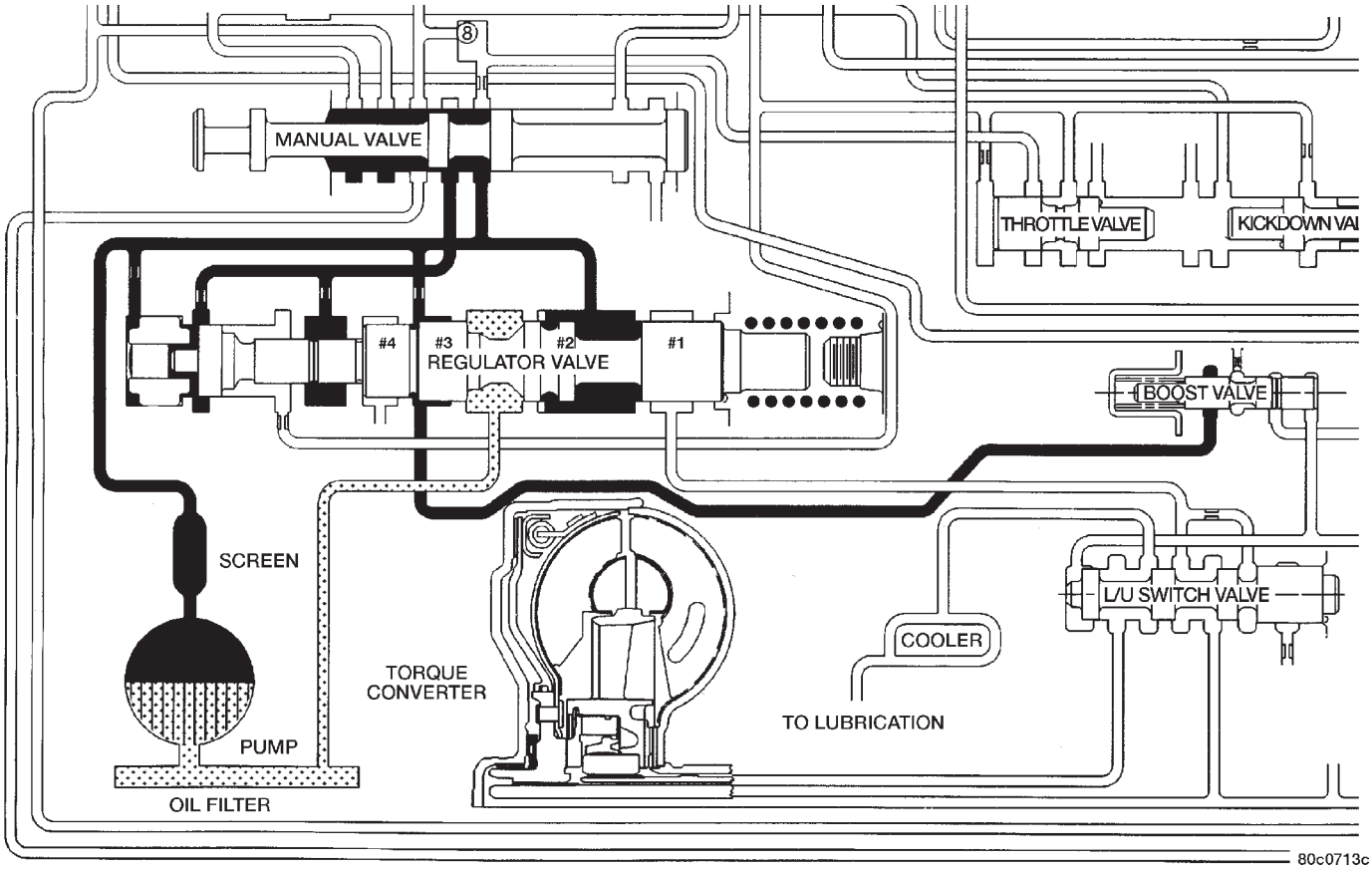

Fig. 262 Regulator Valve in PARK Position

VALVE BODY (Continued)

Meanwhile, the torque converter is filled slowly. In all other gear positions (Fig. 263), fluid flows between two right side lands to the switch valve and torque converter. At low pump speeds, the flow is controlled by the pressure valve groove to reduce pressure to the torque converter. After the torque converter and switch valve fill with fluid, the switch valve becomes the controlling metering device for torque converter pressure. The regulator valve then begins to control the line pressure for the other transmission circuits. The balance of the fluid pressure pushing the valve to the right and the spring pressure pushing to the left determines the size of the metering passage at land #2 (land #1 being at the far right of the valve in the diagram). As fluid leaks past the land, it moves into a groove connected to the filter or sump. As the land meters the fluid to the sump, it causes the pressure to reduce and the spring decreases the size of the metering passage. When the size of the metering passage is reduced, the pressure rises again and the size of the land is increased again. Pressure is regulated by this constant balance of hydraulic and spring pressure.

The metering at land #2 establishes the line pressure throughout the transmission. It is varied according to changes in throttle position and the transmission's internal condition within a range of 57-94 psi (except in REVERSE) (Fig. 264). The regulated line pressure in REVERSE (Fig. 265) is held at much higher pressures than in the other gear positions: 145-280 psi. The higher pressure for REVERSE is achieved by the manual valve blocking the supply of line pressure to the reaction area left of land #4. With this pressure blocked, there is less area for pressure to act on to balance the force of the spring on the right. This allows line pressure to push the valve train to the right, reducing the amount of fluid returned to the pump's inlet, increasing line pressure.

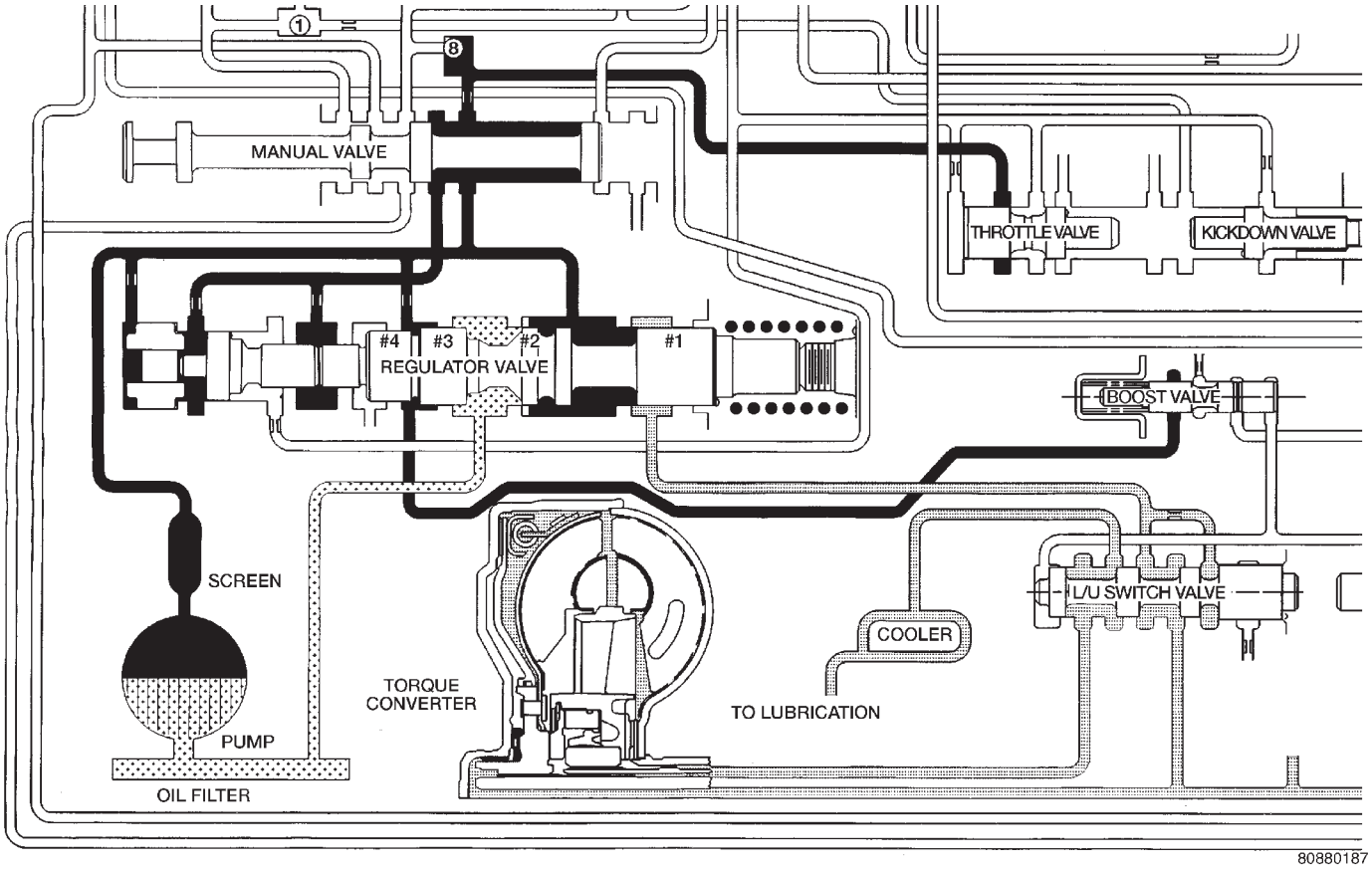

Fig. 263 Regulator Valve in NEUTRAL Position

VALVE BODY (Continued)

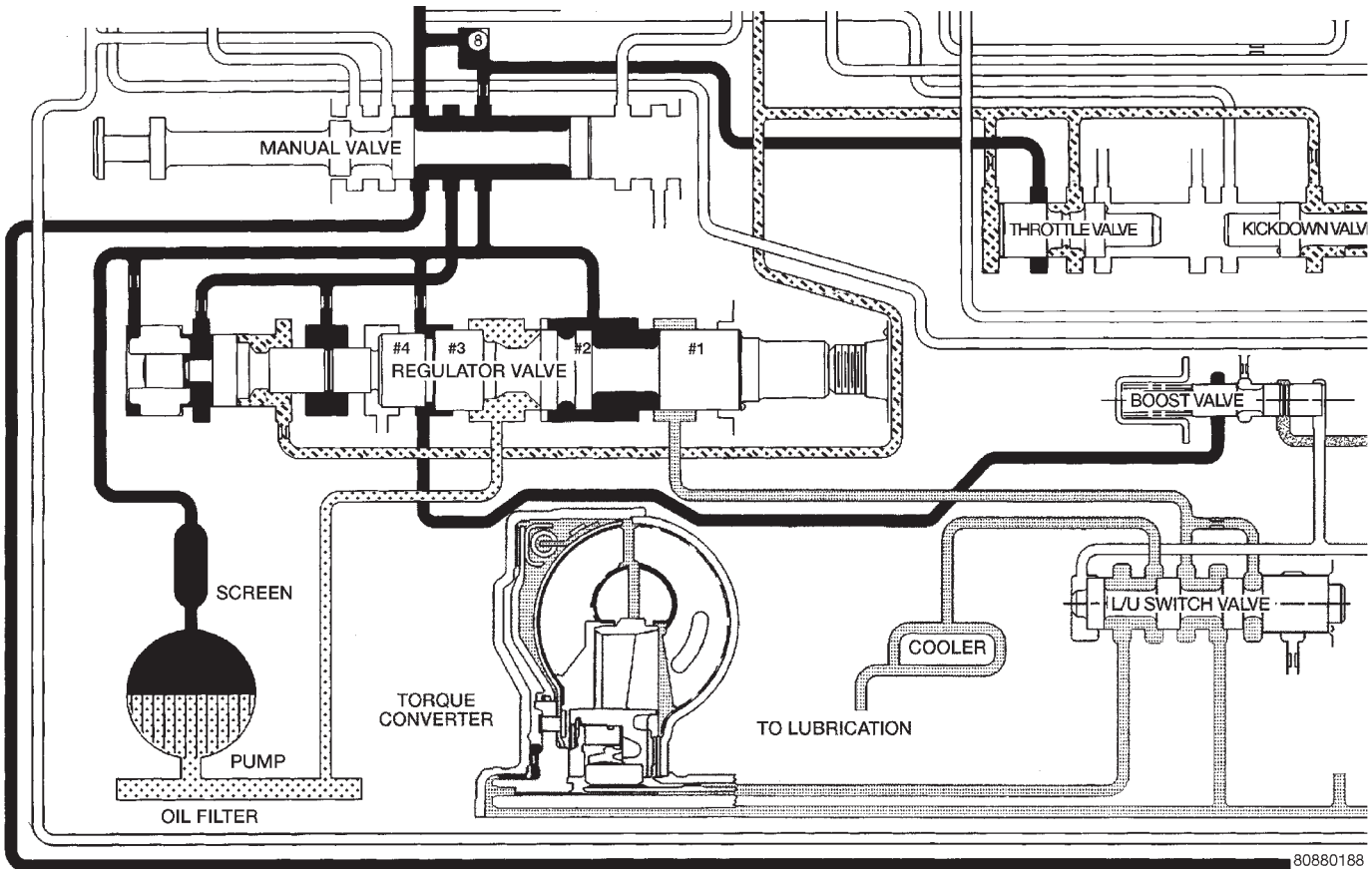

Fig. 264 Regulator Valve in DRIVE Position

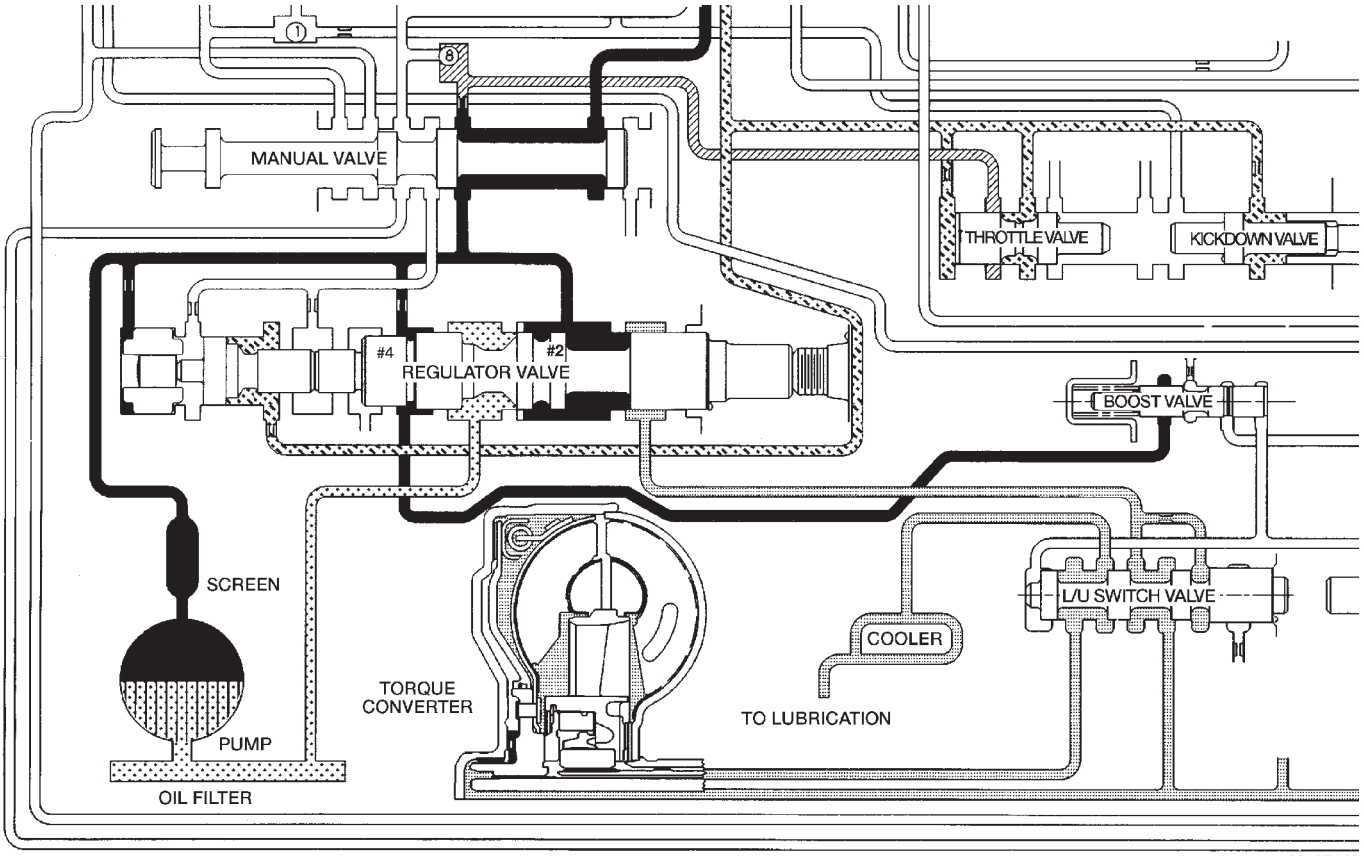

Fig. 265 Regulator Valve in REVERSE Position

VALVE BODY (Continued)

KICKDOWN VALVE

When the throttle valve is as far over to the left as it can go, the maximum line pressure possible will enter the throttle pressure circuit. In this case, throttle pressure will equal line pressure. With the kickdown valve (Fig. 266) pushed into the bore as far as it will go, fluid initially flows through the annular groove of the 2-3 shift valve (which will be in the direct drive position to the right).

After passing the annular groove, the fluid is routed to the spring end of the 2-3 shift valve. Fluid pressure reacting on the area of land #1 overcomes governor pressure, downshifting the 2-3 shift valve into the kickdown, or second gear stage of operation. The valve is held in the kickdown position by throttle pressure routed from a seated check ball (#2). Again, if vehicle speed is low enough, throttle pressure will also push the 1-2 shift valve left to seat its governor plug, and downshift to drive breakaway.

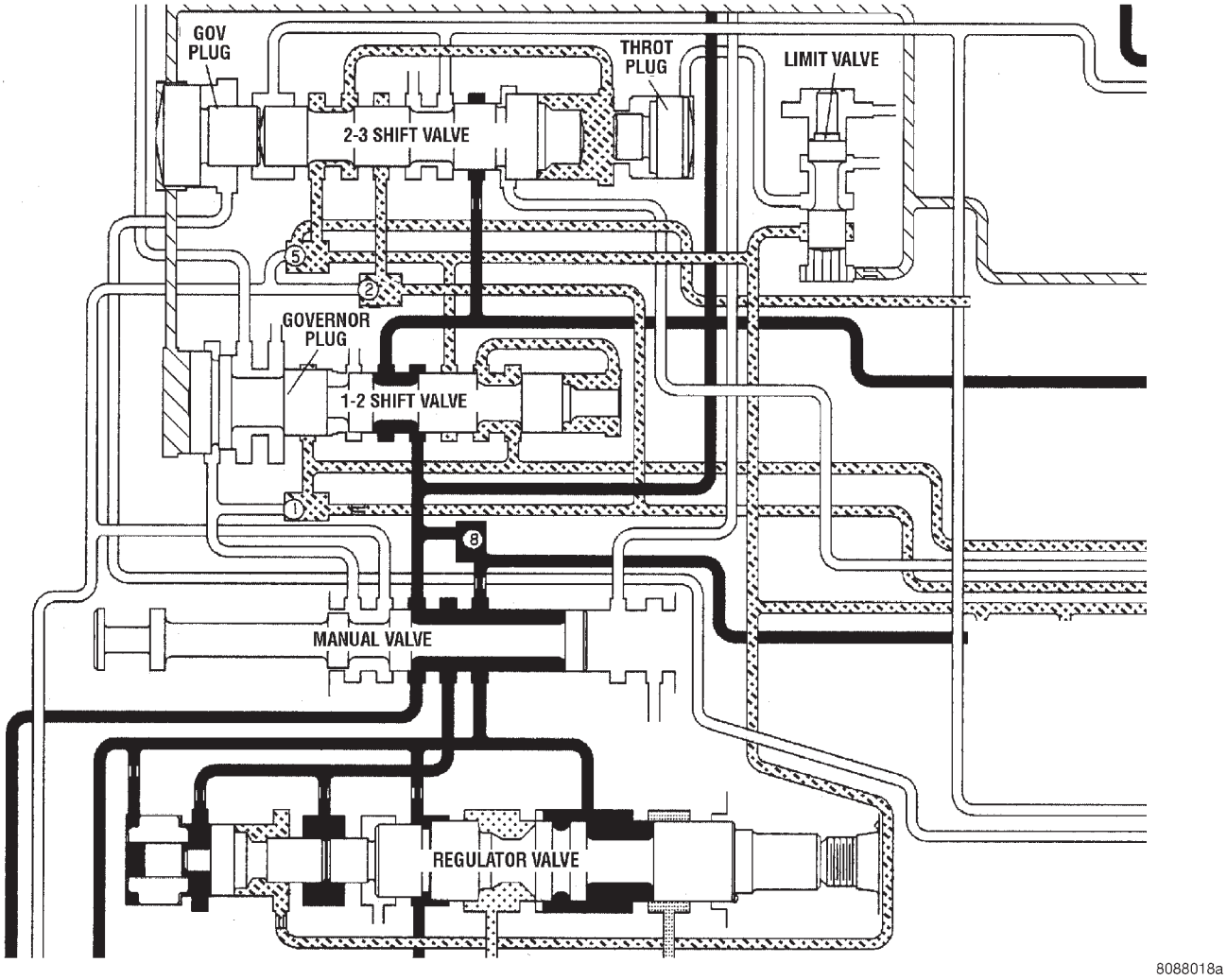

Fig. 266 Kickdown Valve-Wide Open Throttle

VALVE BODY (Continued)

KICKDOWN LIMIT VALVE

The purpose of the limit valve is to prevent a 3-2 downshift at higher speeds when a part-throttle downshift is not desirable. At these higher speeds only a full throttle 3-2 downshift will occur. At low road speeds (Fig. 267) the limit valve does not come into play and does not affect the downshifts. As the vehicle's speed increases (Fig. 268), the governor pressure also increases. The increased governor pressure acts on the reaction area of the bottom land of the limit valve overcoming the spring force trying to push the valve toward the bottom of its bore. This pushes the valve upward against the spring and bottoms the valve against the top of the housing. With the valve bottomed against the housing, the throttle pressure supplied to the valve will be closed off by the bottom land of the limit valve. When the supply of throttle pressure has been shut off, the 3-2 part throttle downshift plug becomes inoperative, because no pressure is acting on its reaction area.

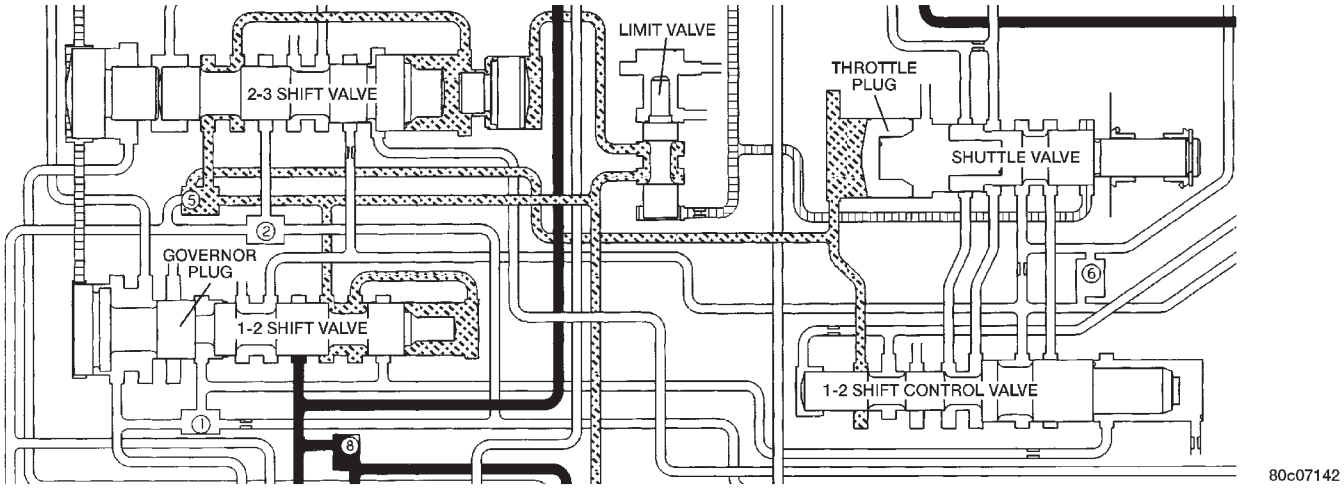

Fig. 267 Kickdown Limit Valve-Low Speeds

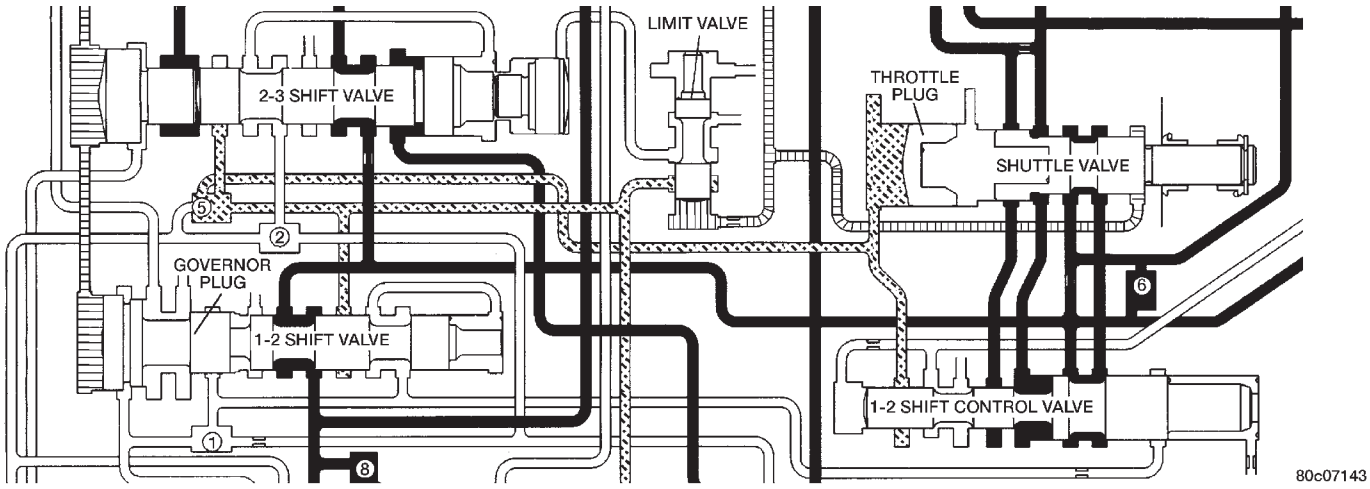

Fig. 268 Kickdown Limit Valve-High Speeds

VALVE BODY (Continued)

1-2 SHIFT VALVE

The 1-2 shift valve assembly (Fig. 269), or mechanism, consists of: the 1-2 shift valve, governor plug, and a spring on the end of the valve. After the manual valve has been placed into a forward gear range, line pressure is directed to the 1-2 shift valve. As the throttle is depressed, throttle pressure is applied to the right side of the 1-2 shift valve assembly. With throttle pressure applied to the right side of the valve, there is now both spring pressure and throttle pressure acting on the valve, holding it against the governor plug. As the vehicle begins to move and build speed, governor pressure is created and is applied to the left of the valve at the governor plug.

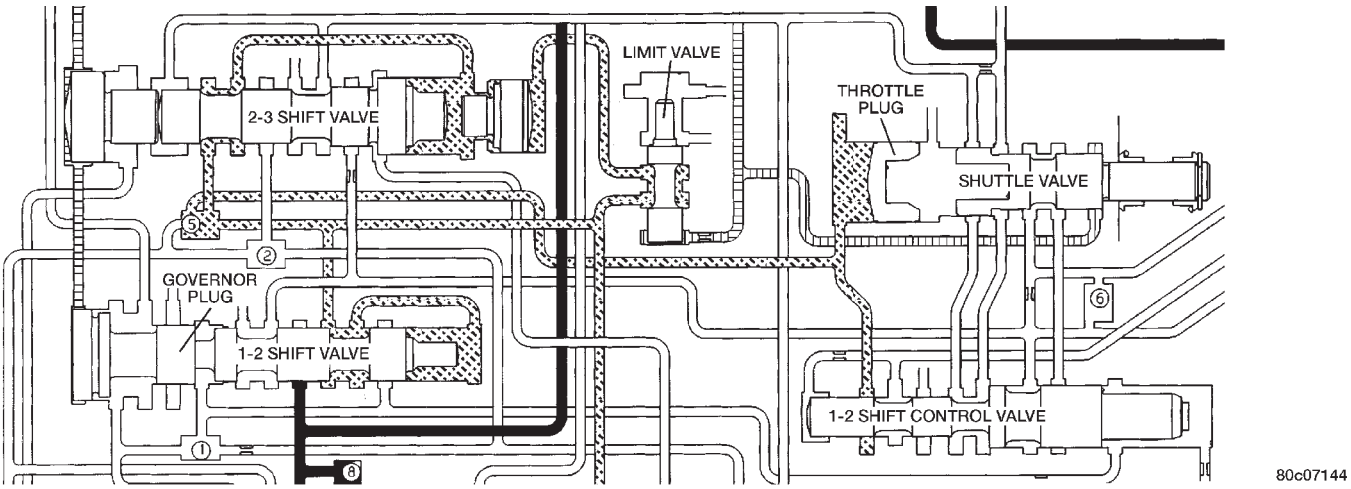

Fig. 269 1-2 Shift Valve-Before Shift

When governor pressure builds to a point where it can overcome the combined force of the spring and throttle pressure on the other side of the valve, the valve will begin to move over to the right. As the valve moves to the right, the middle land of the valve will close off the circuit supplying the throttle pressure to the right side of the valve. When the throttle pressure is closed off, the valve will move even farther to the right, allowing line pressure to enter another circuit and energize the front servo, applying the front band (Fig. 270).

The governor plug serves a dual purpose:

- It allows the shift valves to move either left or right, allowing both upshifts and downshifts.
- When in a manual selection position, it will be hydraulically “blocked” into position so no upshift can occur.

The physical blocking of the upshift while in the manual “1” position is accomplished by the directing of line pressure between both lands of the governor plug. The line pressure reacts against the larger land of the plug, pushing the plug back against the end plate overcoming governor pressure. With the combination of the line pressure and spring pressure, the valve cannot move, preventing any upshift.

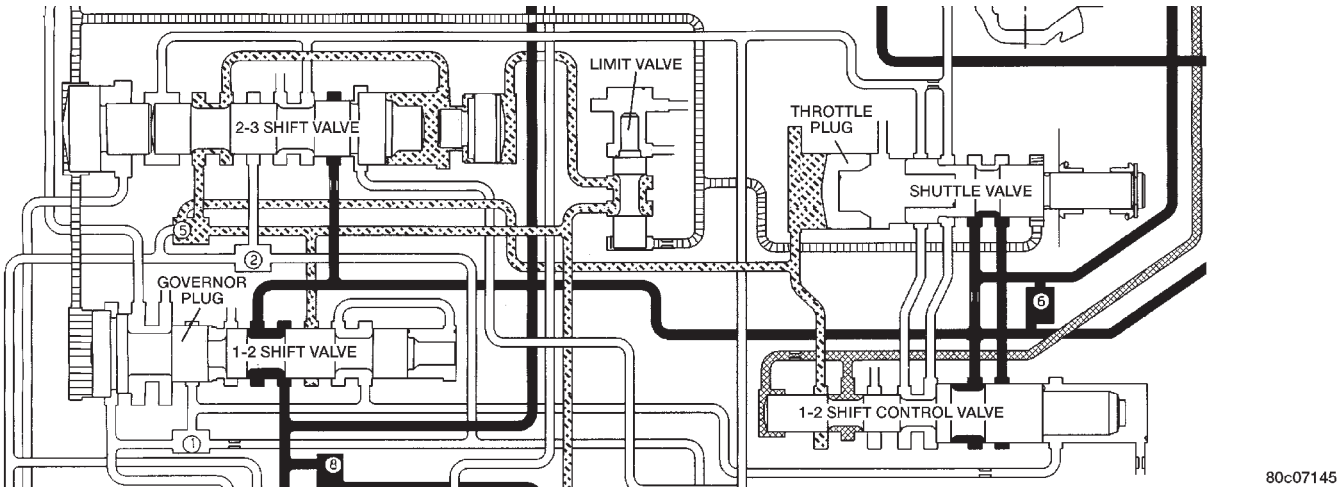

Fig. 270 1-2 Shift Valve-After Shift

VALVE BODY (Continued)

1-2 SHIFT CONTROL VALVE

It contains a valve with four lands and a spring. It is used as both a “relay” and “balanced” valve.

The valve has two specific operations (Fig. 271):

- Aid in quality of the 1-2 upshift.
- Aid in the quality and timing of the 3-2 kickdown ranges.

When the manual valve is set to the DRIVE position and the transmission is in the first or second gear range, 1-2 shift control or “modulated throttle pressure” is supplied to the middle of the accumulator piston by the 1-2 shift control valve. During the 1-2 upshift, this pressure is used to control the kickdown servo apply pressure that is needed to apply the kickdown and accumulator pistons. Thus, the 1-2 shift point is “cushioned” and the quality is improved. During a WOT kickdown, kickdown pressure is applied between the kickdown valve and the 1-2 shift control valve. This additional pressure is directed to the 1-2 shift control’s spring cavity, adding to the spring load on the valve. The result of this increased “modulated” throttle pressure is a firmer WOT upshift.

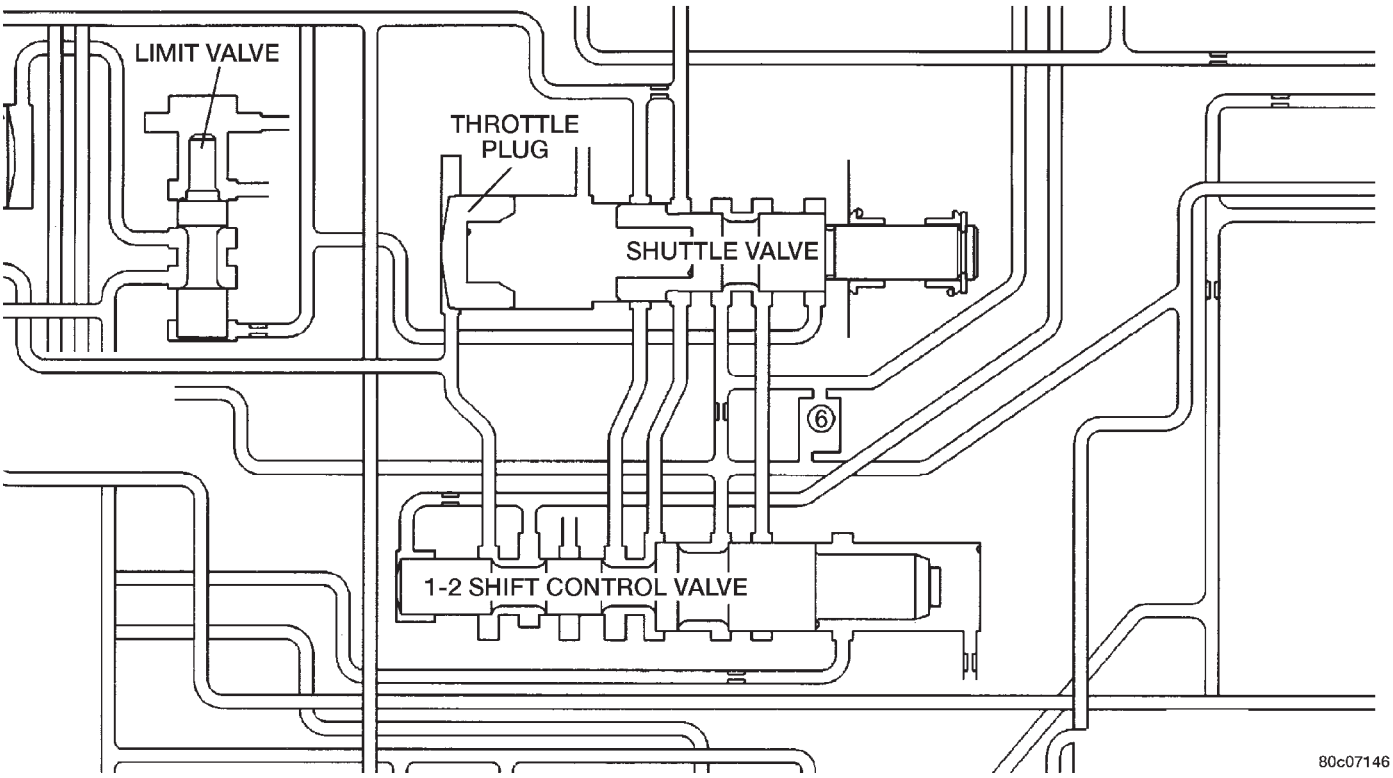

Fig. 271 1-2 Shift Control Valve

VALVE BODY (Continued)

2-3 SHIFT VALVE

The 2-3 shift valve mechanism (Fig. 272) consists of the 2-3 shift valve, governor plug and spring, and a throttle plug. After the 1-2 shift valve has completed its operation and applied the front band, line pressure is directed to the 2-3 shift valve through the connecting passages from the 1-2 shift valve. The line pressure will then dead–end at land #2 until the 2-3 valve is ready to make its shift. Now that the vehicle is in motion and under acceleration, there is throttle pressure being applied to the spring side of the valve and between lands #3 and #4.

As vehicle speed increases, governor pressure increases proportionately, until it becomes great enough to overcome the combined throttle and spring pressure on the right side of the valve. Since the throttle pressure end of the 2-3 shift valve is larger in diameter than the 1-2 shift valve, the 2-3 shift will always happen at a greater speed than the 1-2 shift. When this happens, the governor plug is forced against the shift valve moving it to the right. The shift valve causes land #4 to close the passage supplying throttle pressure to the 2-3 shift valve. Without throttle pressure present in the circuit now, the governor plug will push the valve over far enough to bottom the valve in its bore. This allows land #2 to direct line pressure to the front clutch.

After the shift (Fig. 273), line pressure is directed to the land between the shift valve and the governor plug, and to the release side of the kickdown servo. This releases the front band and applies the front clutch, shifting into third gear or direct drive. The rear clutch remains applied, as it has been in the other gears. During a manual “1” or manual “2” gear selection, line pressure is sent between the two lands of the 2-3 governor plug. This line pressure at the governor plug locks the shift valve into the second gear position, preventing an upshift into direct drive. The theory for the blocking of the valve is the same as that of the 1-2 shift valve.

3-4 SHIFT VALVE

The PCM energizes the overdrive solenoid during the 3-4 upshift (Fig. 274). This causes the solenoid check ball to close the vent port allowing line pressure from the 2-3 shift valve to act directly on the 3-4 upshift valve. Line pressure on the 3-4 shift valve overcomes valve spring pressure moving the valve to the upshift position (Fig. 275). This action exposes the feed passages to the 3-4 timing valve, 3-4 quick fill valve, 3-4 accumulator, and ultimately to the overdrive piston.

3-4 TIMING VALVE

The 3-4 timing valve is moved by line pressure coming through the 3-4 shift valve (Fig. 275). After the shift, the timing valve holds the 2-3 shift valve in an upshift position. The purpose is to prevent the 2-3 valve from downshifting before the 3-4 valve (Fig. 274).

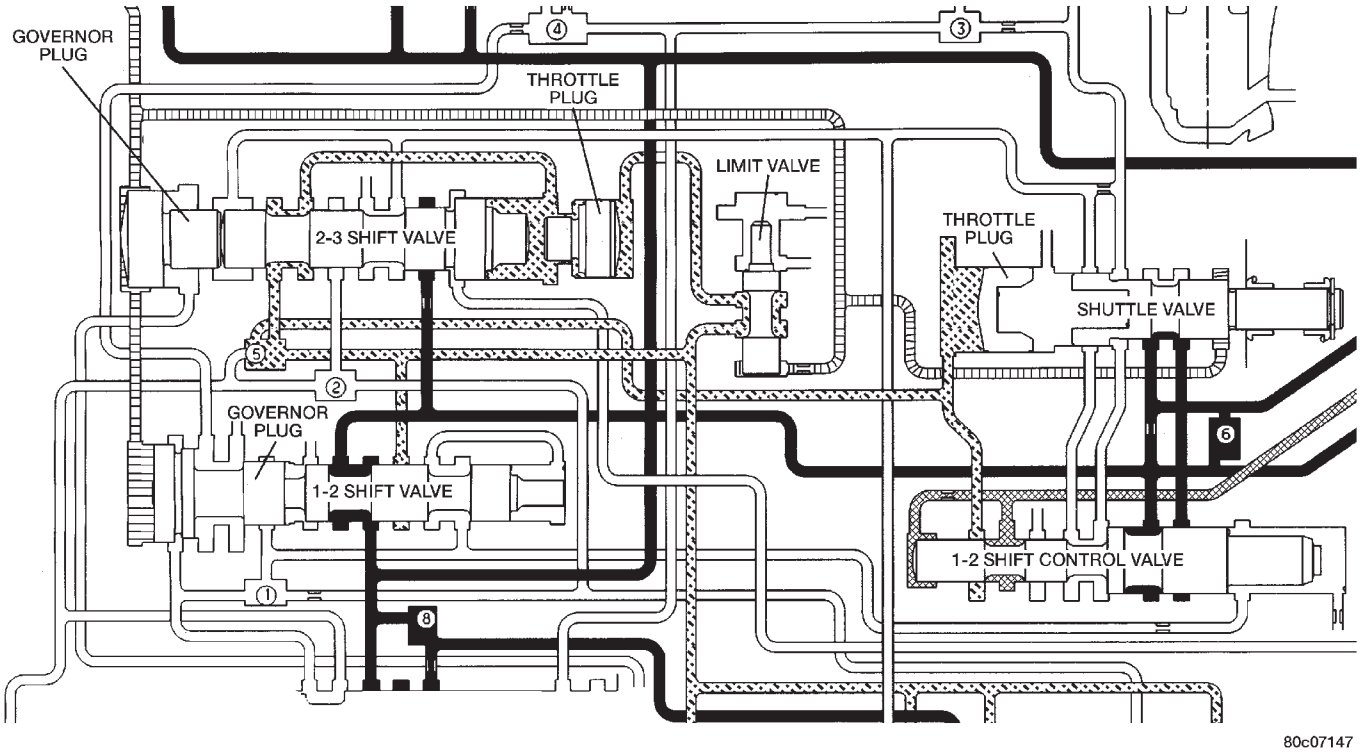

Fig. 272 2-3 Shift Valve-Before Shift

VALVE BODY (Continued)

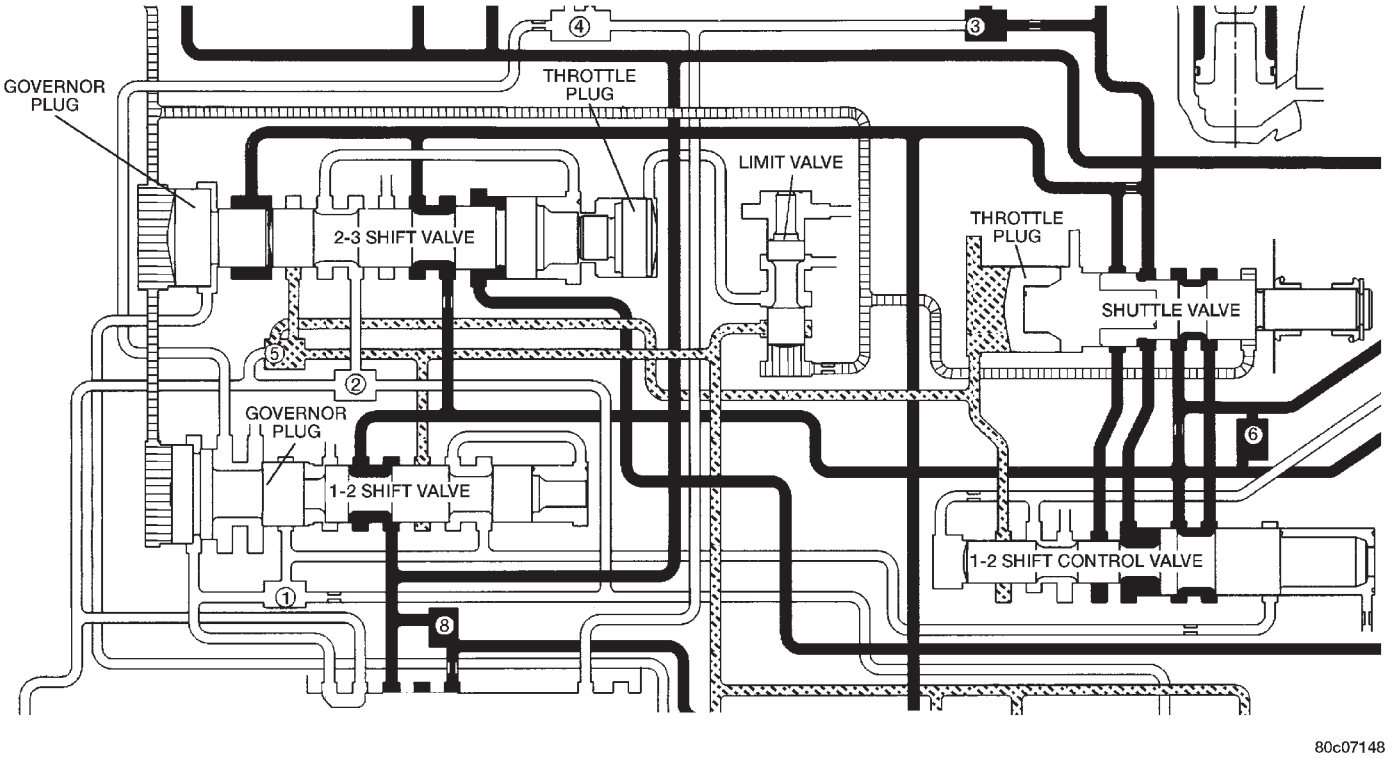

Fig. 273 2-3 Shift Valve-After Shift

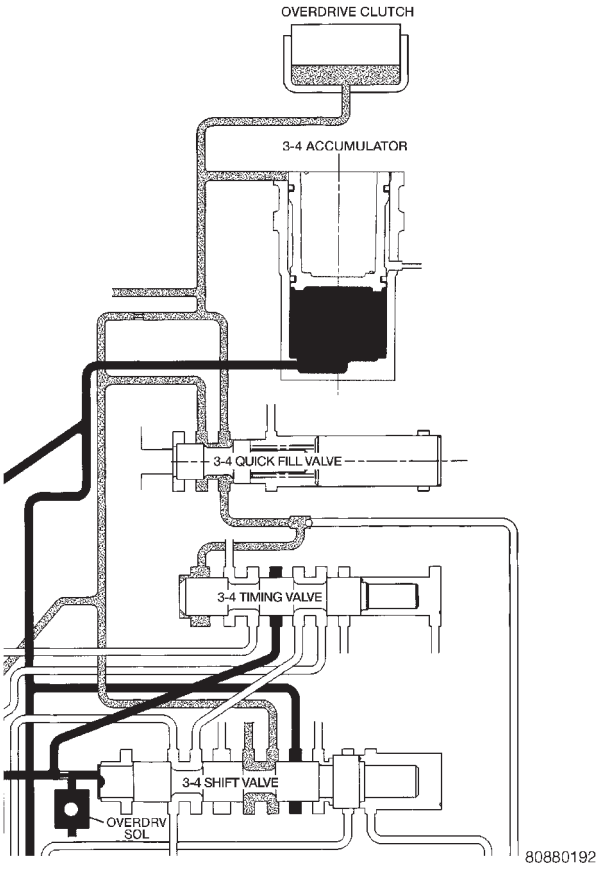

Fig. 274 3-4 Shift Valve Before Shift

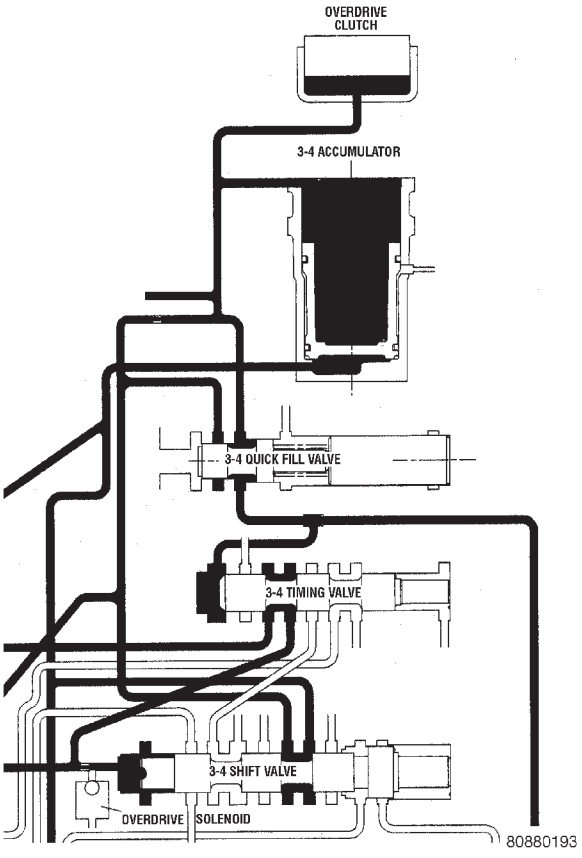

Fig. 275 3-4 Shift Valve After Shift

VALVE BODY (Continued)

3-4 QUICK FILL VALVE

The 3-4 quick fill valve provides faster engagement of the overdrive clutch during 3-4 upshifts. The valve temporarily bypasses the clutch piston feed orifice at the start of a 3-4 upshift (Fig. 274). This exposes a larger passage into the piston retainer resulting in a much faster clutch fill and apply sequence. The quick fill valve does not bypass the regular clutch feed orifice throughout the 3-4 upshift. Instead, once a predetermined pressure develops within the clutch, the valve closes the bypass (Fig. 275). Clutch fill is then completed through the regular feed orifice.

THROTTLE VALVE

In all gear positions the throttle valve (Fig. 276) is being supplied with line pressure. The throttle valve meters and reduces the line pressure that now becomes throttle pressure. The throttle valve is moved by a spring and the kickdown valve, which is mechanically connected to the throttle. The larger the throttle opening, the higher the throttle pressure (to a maximum of line pressure). The smaller the throttle opening, the lower the throttle pressure (to a minimum of zero at idle). As engine speed increases, the increase in pump speed increases pump output. The increase in pressure and volume must be regulated to maintain the balance within the transmission. To do this, throttle pressure is routed to the reaction area on the right side of the throttle pressure plug (in the regulator valve).

The higher engine speed and line pressure would open the vent too far and reduce line pressure too much. Throttle pressure, which increases with engine speed (throttle opening), is used to oppose the movement of the pressure valve to help control the metering passage at the vent. The throttle pressure is combined with spring pressure to reduce the force of the throttle pressure plug on the pressure valve. The larger spring at the right closes the regulator valve passage and maintains or increases line pressure. The increased line pressure works against the reaction area of the line pressure plug and the reaction area left of land #3 simultaneously moves the regulator valve train to the right and controls the metering passage.

The kickdown valve, along with the throttle valve, serve to delay upshifts until the correct vehicle speed has been reached. It also controls downshifts upon driver demand, or increased engine load. If these valves were not in place, the shift points would be at the same speed for all throttle positions. The kickdown valve is actuated by a cam connected to the throttle. This is accomplished through either a linkage or a cable. The cam forces the kickdown valve toward the throttle valve compressing the spring between them and moving the throttle valve. As the throttle valve land starts to uncover its port, line pressure is “metered” out into the circuits and viewed as throttle pressure. This increased throttle pressure is metered out into the circuits it is applied to: the

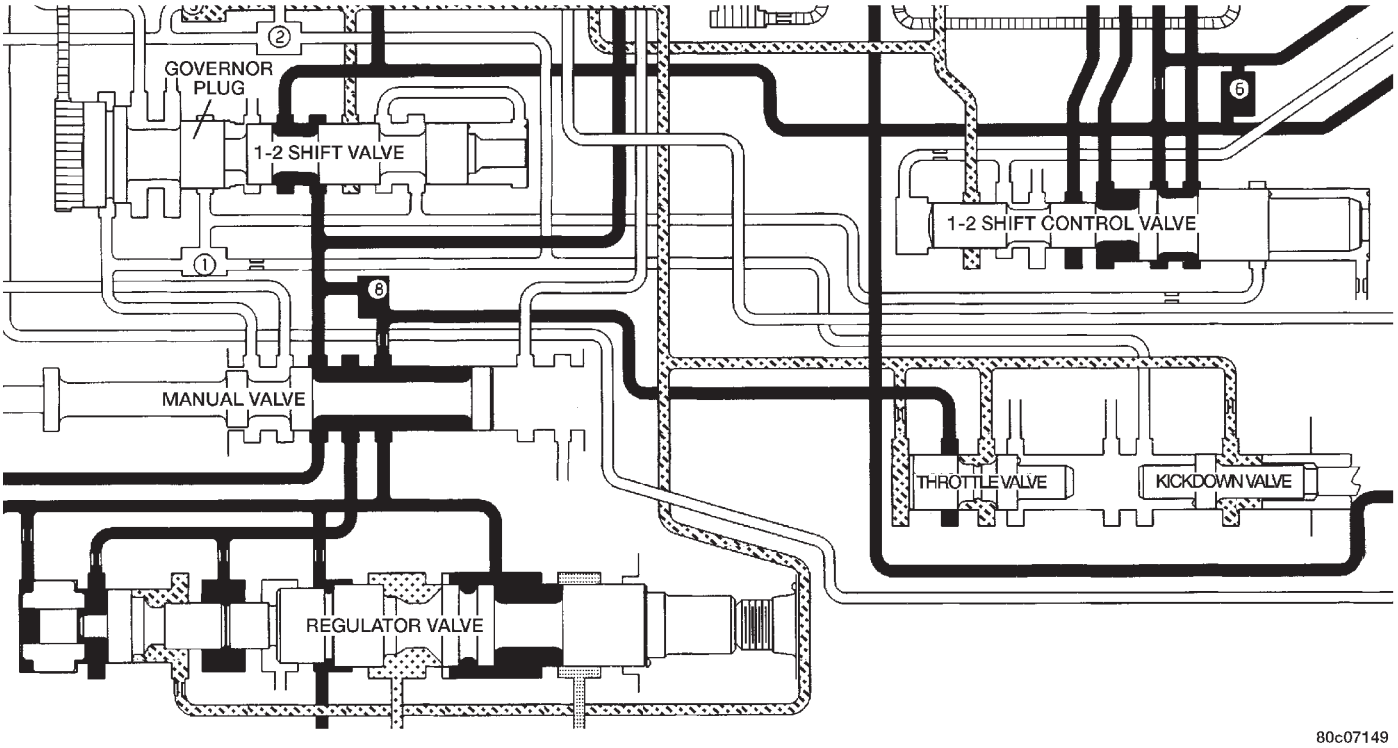

Fig. 276 Throttle Valve

VALVE BODY (Continued)

1-2 and 2-3 shift valves. When the throttle pressure is high enough, a 3-2 downshift will occur. If the vehicle speed is low enough, a 2-1 downshift will occur.

SWITCH VALVE

When the transmission is in Drive Second before the TCC application occurs (Fig. 277), the pressure regulator valve is supplying torque converter pressure to the switch valve. The switch valve directs this pressure through the transmission input shaft, into the converter, through the converter, back out between the input shaft and the reaction shaft, and back up to the switch valve. From the switch valve, the fluid pressure is directed to the transmission cooler, and lubrication pressure returns from the cooler to lubricate different portions of the transmission.

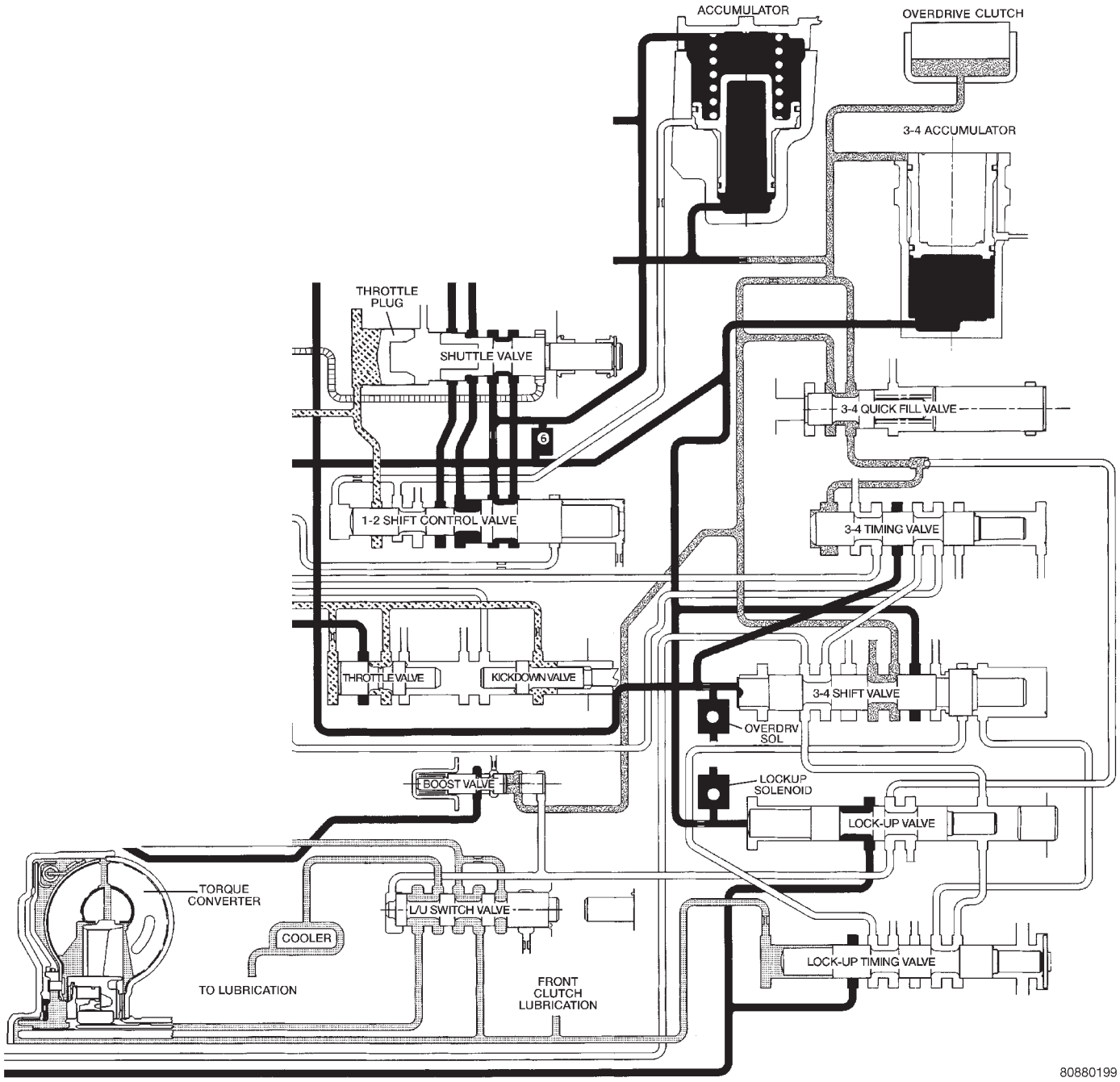

Fig. 277 Switch Valve-Torque Converter Unlocked

VALVE BODY (Continued)

Once the TCC control valve has moved to the right (Fig. 278), line pressure is directed to the tip of the switch valve, forcing the valve to the right. The switch valve now vents oil from the front of the piston in the torque converter, and supplies line pressure to the (rear) apply side of the torque converter piston. This pressure differential causes the piston to apply against the friction material, cutting off any further flow of line pressure oil. After the switch valve is shuttled right allowing line pressure to engage the TCC, torque converter pressure is directed past the switch valve into the transmission cooler and lubrication circuits.

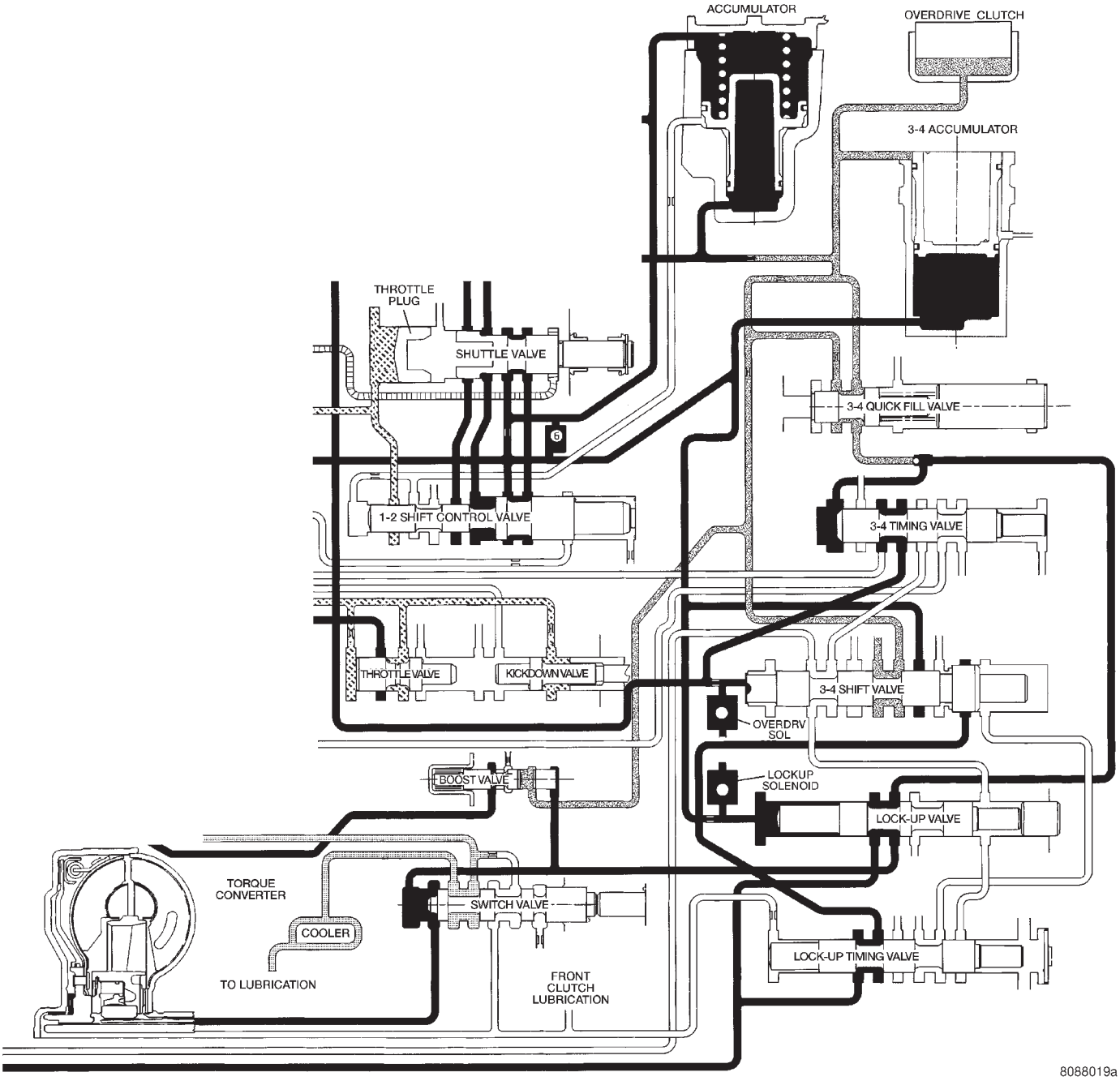

Fig. 278 Switch Valve-Torque Converter Locked

VALVE BODY (Continued)

MANUAL VALVE

The manual valve (Fig. 279) is a relay valve. The purpose of the manual valve is to direct fluid to the correct circuit needed for a specific gear or driving range. The manual valve, as the name implies, is manually operated by the driver with a lever located on the side of the valve body. The valve is connected mechanically by either a cable or linkage to the gear-shift mechanism. The valve is held in each of its positions by a spring-loaded roller or ball that engages the “roostercomb” of the manual valve lever.

CONVERTER CLUTCH LOCK-UP VALVE

The torque converter clutch (TCC) lock-up valve controls the back (ON) side of the torque converter clutch. When the PCM energizes the TCC solenoid to engage the converter clutch piston, pressure is applied to the TCC lock-up valve which moves to the right and applies pressure to the torque converter clutch.

CONVERTER CLUTCH LOCK-UP TIMING VALVE

The torque converter clutch (TCC) lock-up timing valve is there to block any 4-3 downshift until the TCC is completely unlocked and the clutch is disengaged.

SHUTTLE VALVE

The assembly is contained in a bore in the valve body above the shift valves. When the manual valve is positioned in the Drive range, throttle pressure acts on the throttle plug of the shuttle valve (Fig. 271) to move it against a spring, increasing the spring force on the shuttle valve. During a part or full throttle 1-2 upshift, the throttle plug is bottomed by throttle pressure, holding the shuttle valve to the right against governor pressure, and opening a by–pass circuit. The shuttle valve controls the quality of the kickdown shift by restricting the rate of fluid discharge from the front clutch and servo release circuits. During a 3-2 kickdown, fluid discharges through the shuttle by-pass circuit. When the shuttle valve closes the by-pass circuit, fluid discharge is restricted and controlled for the application of the front band. During a 2-3 “lift foot” upshift, the shuttle valve by-passes the restriction to allow full fluid flow through the by-pass groove for a faster release of the band.

BOOST VALVE

The boost valve (Fig. 280) provides increased fluid apply pressure to the overdrive clutch during 3-4 upshifts (Fig. 281), and when accelerating in fourth gear. The boost valve also serves to increase line pressure during torque converter lock-up.

REMOVAL

The valve body can be removed for service without having to remove the transmission assembly.

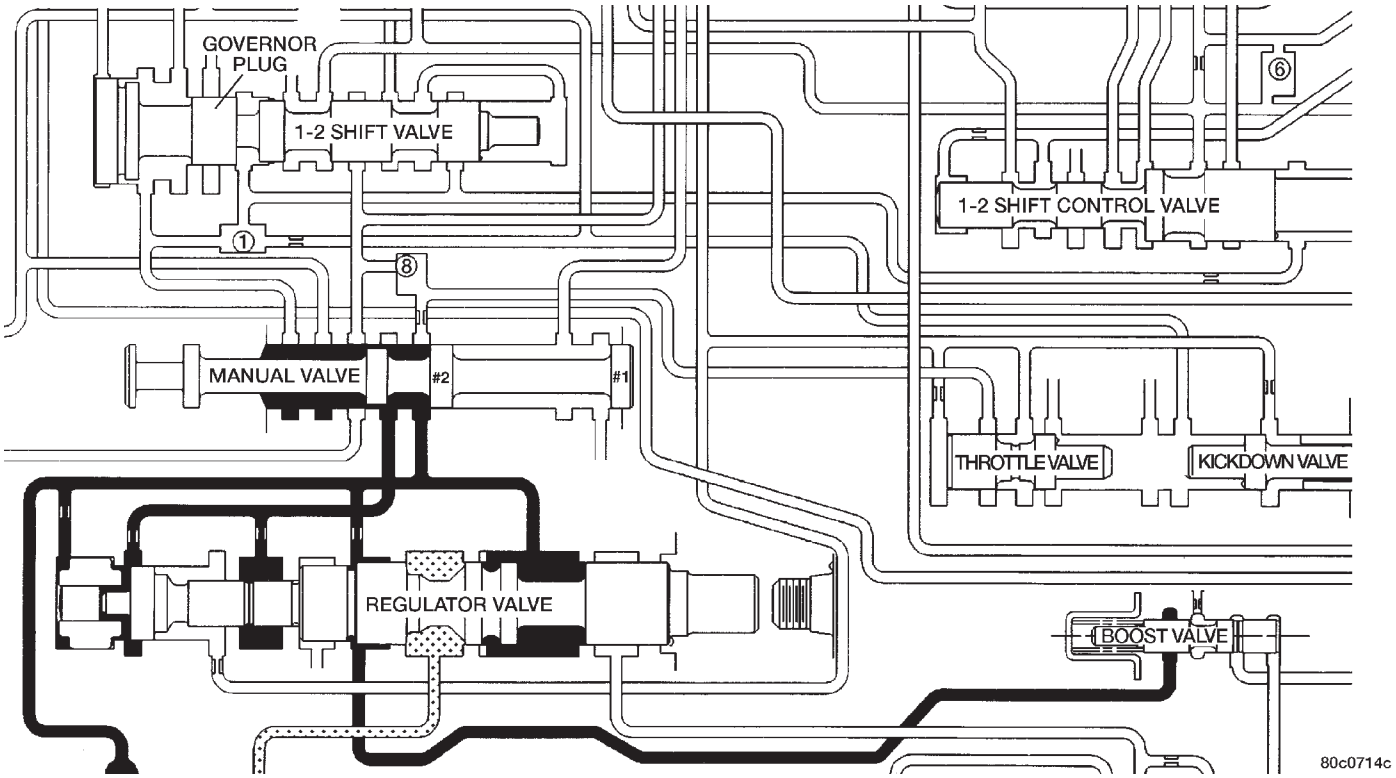

Fig. 279 Manual Valve

VALVE BODY (Continued)

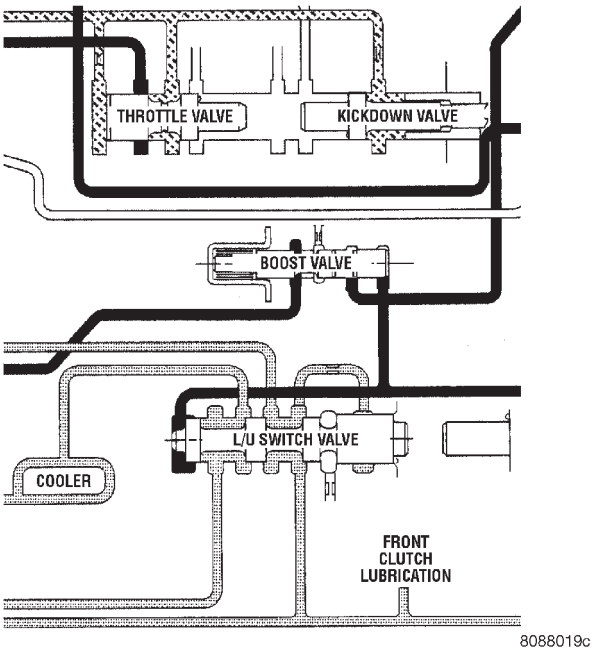

Fig. 280 Boost Valve Before Lock-up

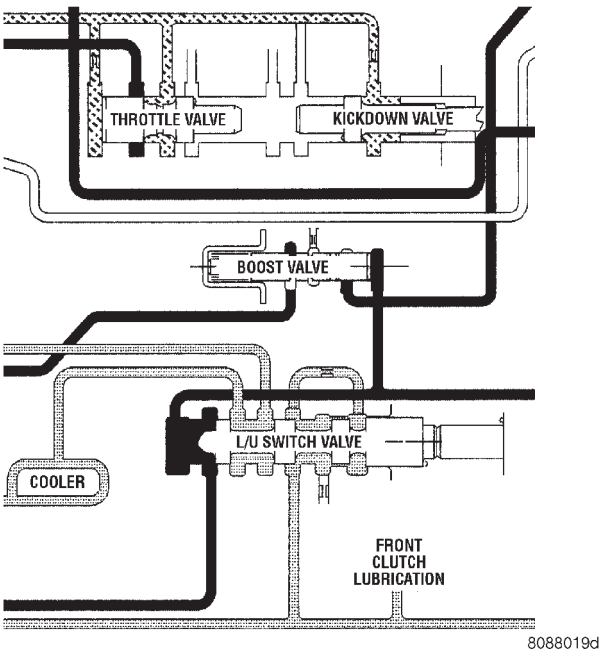

Fig. 281 Boost Valve After Lock-up

The valve body can be disassembled for cleaning and inspection of the individual components.

The only replaceable valve body components are:

- Manual lever.
- Manual lever washer, seal, E-clip, and shaft seal.
- Manual lever detent ball.
- Throttle lever.
- Fluid filter.
- Pressure adjusting screw bracket.
- Governor pressure solenoid.
- Governor pressure sensor (includes transmission temperature thermistor).
- Converter clutch/overdrive solenoid assembly and harness .
- Governor housing gasket.
- Solenoid case connector O-rings.

(1) Shift transmission into NEUTRAL.

(2) Raise vehicle.

(3) Remove gearshift and throttle levers from shaft of valve body manual lever.

(4) Disconnect wires at solenoid case connector (Fig. 282).

(5) Position drain pan under transmission oil pan.

(6) Remove transmission oil pan and gasket.

(7) Remove fluid filter from valve body.

(8) Remove bolts attaching valve body to transmission case.

(9) Lower valve body enough to remove accumulator piston and springs.

(10) Work manual lever shaft and electrical connector out of transmission case.

(11) Lower valve body, rotate valve body away from case, pull park rod out of sprag, and remove valve body (Fig. 283).

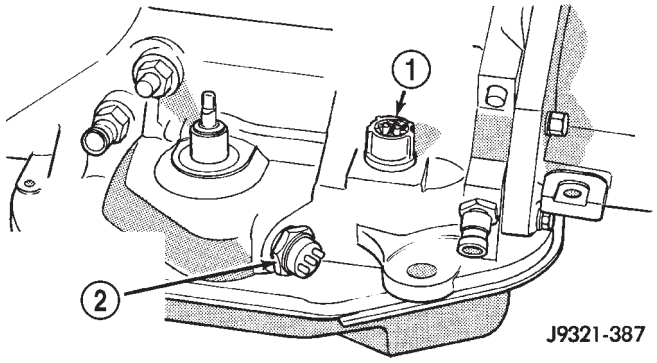

Fig. 282 Transmission Case Connector

1 - SOLENOID CASE CONNECTOR
2 - PARK/NEUTRAL POSITION SWITCH

DISASSEMBLY

CAUTION: Do not clamp any valve body component in a vise. This practice can damage the component resulting in unsatisfactory operation after assembly and installation. Do not use pliers to remove any of the valves, plugs or springs and do not force any of the components out or into place. The valves and valve body housings will be damaged if force is used. Tag or mark the valve body springs for reference as they are removed. Do not allow them to become intermixed.

(1) Disconnect wires from governor pressure sensor and solenoid.

VALVE BODY (Continued)

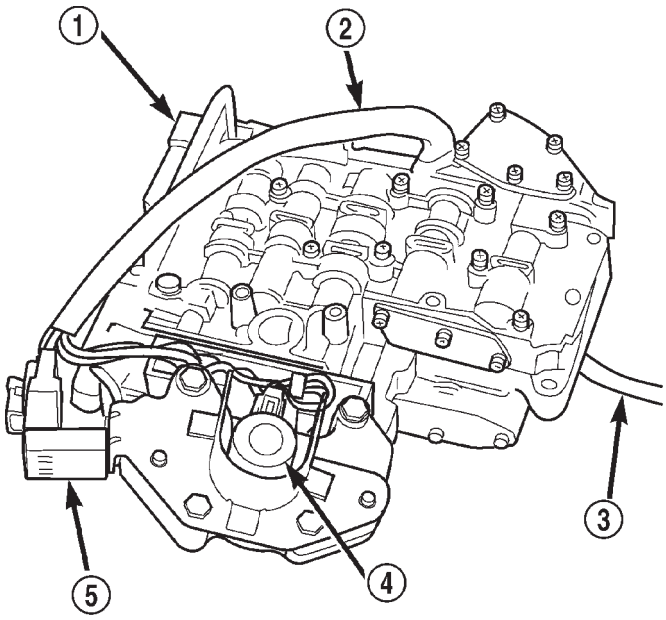

Fig. 283 Valve Body

1 - VALVE BODY
2 - WIRE HARNESS
3 - PARK ROD
4 - GOVERNOR PRESSURE SOLENOID
5 - GOVERNOR PRESSURE SENSOR

(2) Remove screws attaching governor body and retainer plate to transfer plate.

(3) Remove retainer plate, governor body and gasket from transfer plate.

(4) Remove governor pressure sensor from governor body.

(5) Remove governor pressure solenoid by pulling it straight out of bore in governor body. Remove and discard solenoid O-rings if worn, cut, or torn.

(6) Remove small shoulder bolt that secures solenoid harness case connector to 3-4 accumulator housing (Fig. 284). Retain shoulder bolt. Either tape it to harness or thread it back into accumulator housing after connector removal.

(7) Unhook overdrive/converter solenoid harness from 3-4 accumulator cover plate (Fig. 285).

(8) Turn valve body over and remove screws that attach overdrive/converter solenoid assembly to valve body (Fig. 286).

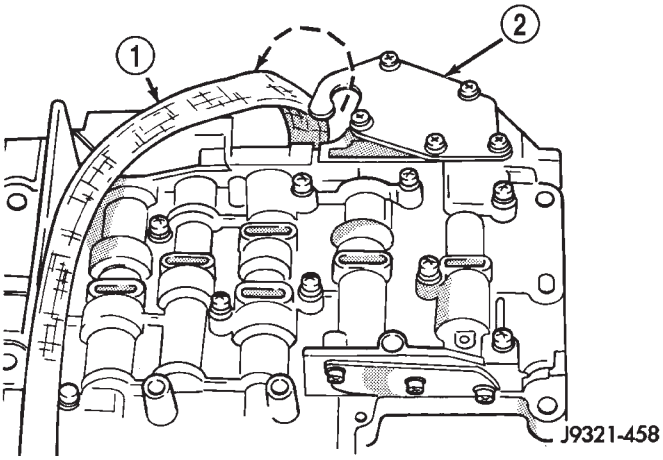

Fig. 285 Unhooking Solenoid Harness From Accumulator Cover Plate

1 - OVERDRIVE/CONVERTER SOLENOID WIRE HARNESS
2 - 3-4 ACCUMULATOR COVER PLATE

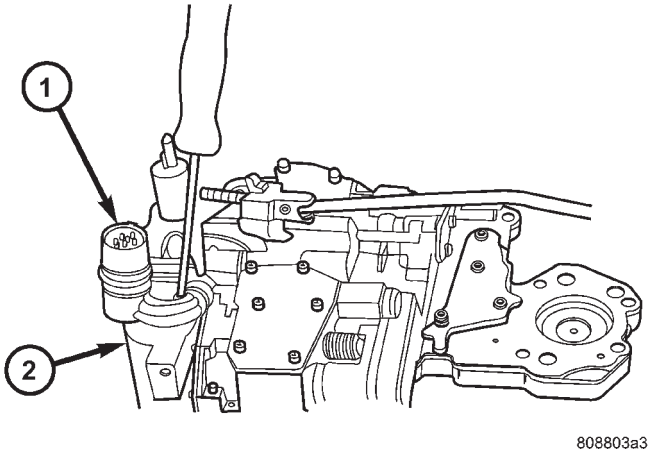

Fig. 284 Solenoid Harness Case Connector Shoulder Bolt

1 - SOLENOID HARNESS CASE CONNECTOR
2 - 3-4 ACCUMULATOR HOUSING

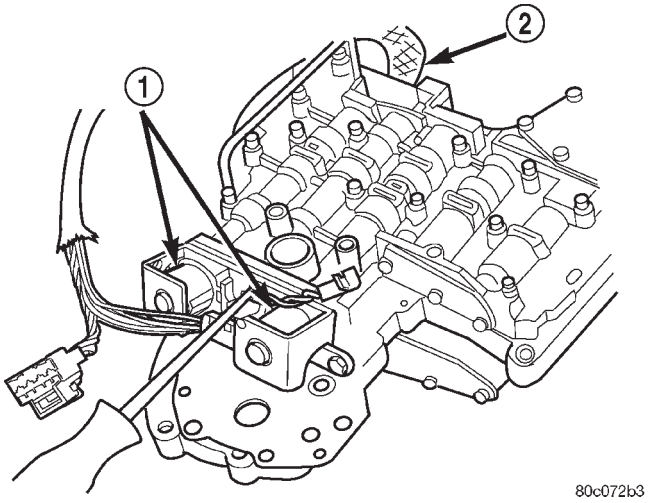

Fig. 286 Solenoid Assembly Screws

1 - OVERDRIVE/CONVERTER CLUTCH SOLENOID ASSEMBLY
2 - HARNESS

VALVE BODY (Continued)

(9) Remove solenoid and harness assembly from valve body (Fig. 287).

(10) Remove boost valve cover (Fig. 288).

(11) Remove boost valve retainer, valve spring and boost valve (Fig. 289).

(12) Secure detent ball and spring with Retainer Tool 6583 (Fig. 290).

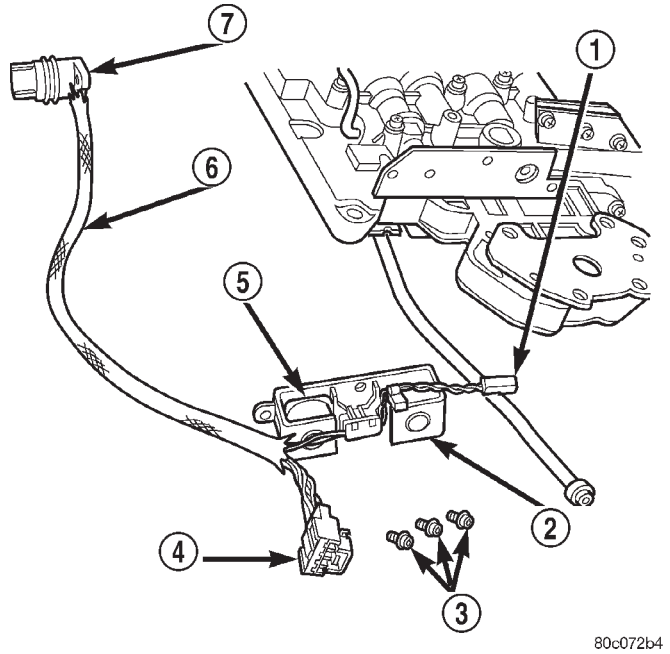

Fig. 287 Solenoid Assembly

1 - GOVERNOR SOLENOID WIRES
2 - CONVERTER CLUTCH SOLENOID
3 - SOLENOID SCREWS
4 - GOVERNOR SENSOR WIRES
5 - OVERDRIVE SOLENOID
6 - HARNESS
7 - CASE CONNECTOR

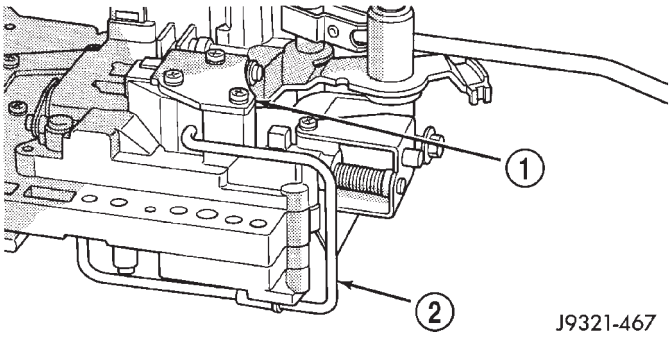

Fig. 288 Boost Valve

1 - BOOST VALVE HOUSING AND COVER
2 - BOOST VALVE TUBE

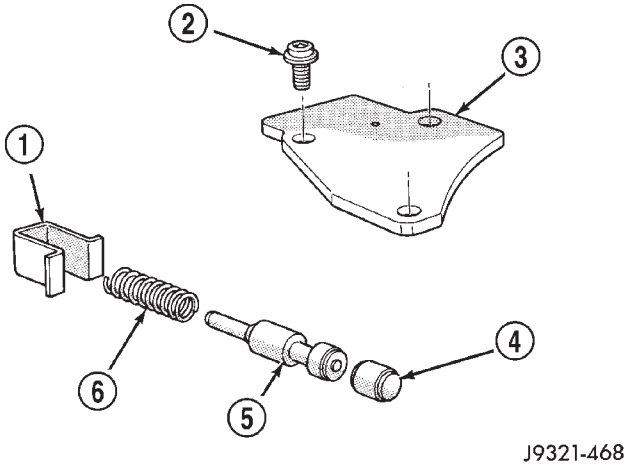

Fig. 289 Boost Valve Components

1 - SPRING AND VALVE RETAINER
2 - COVER SCREWS
3 - BOOST VALVE COVER
4 - BOOST VALVE PLUG
5 - BOOST VALVE
6 - BOOST VALVE SPRING

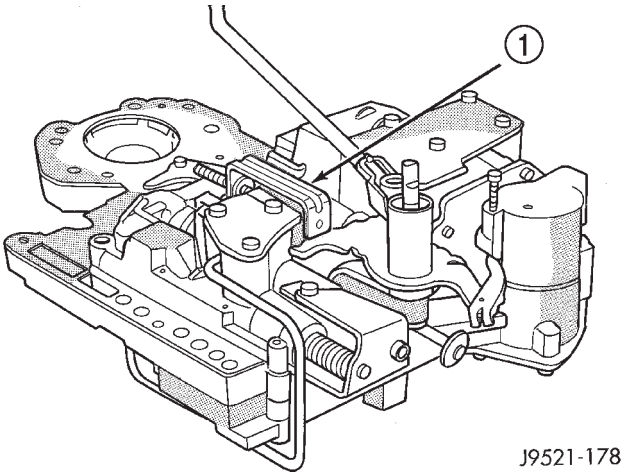

Fig. 290 Detent Ball And Spring

1 - SPECIAL TOOL 6583 POSITIONED ON DETENT HOUSING

VALVE BODY (Continued)

(13) Remove park rod E-clip and separate rod from manual lever (Fig. 291).

(14) Remove E-clip and washer that retains throttle lever shaft in manual lever (Fig. 292).

(15) Remove manual lever and throttle lever (Fig. 293). Rotate and lift manual lever off valve body and throttle lever shaft. Then slide throttle lever out of valve body.

(16) Position pencil magnet next to detent housing to catch detent ball and spring. Then carefully remove Retainer Tool 6583 and remove detent ball and spring (Fig. 294).

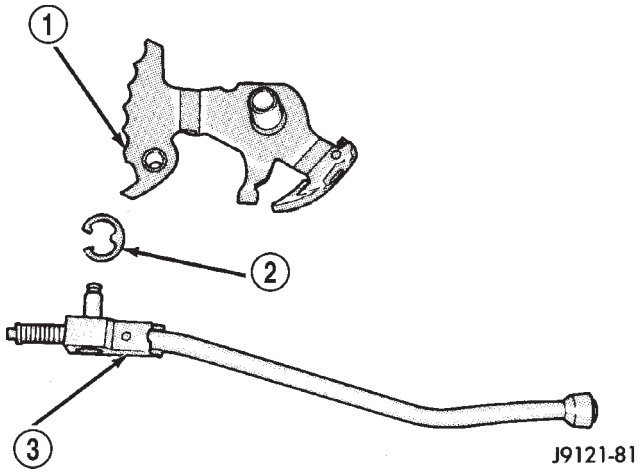

Fig. 291 Park Rod

1 - MANUAL LEVER
2 - E-CLIP
3 - PARK ROD

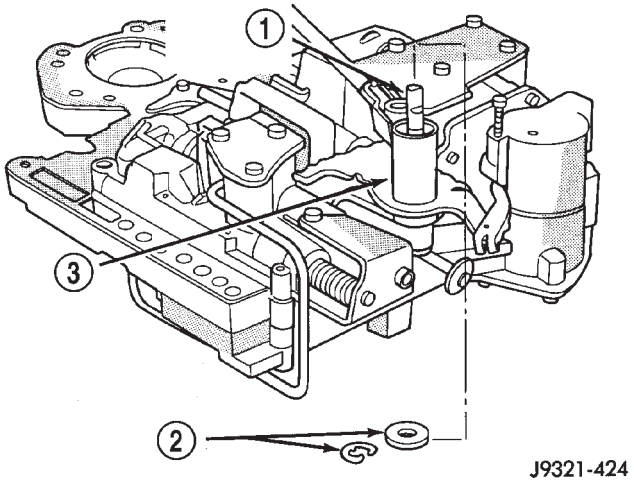

Fig. 292 Throttle Lever E-Clip And Washer

1 - THROTTLE LEVER SHAFT
2 - E-CLIP AND WASHER
3 - MANUAL SHAFT

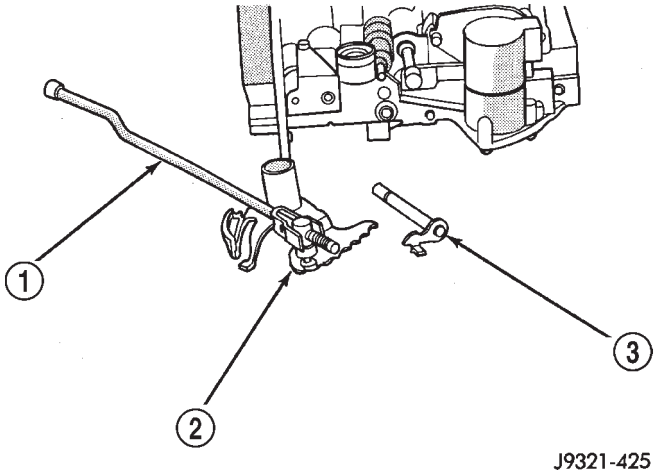

Fig. 293 Manual And Throttle Lever

1 - PARK ROD
2 - MANUAL LEVER ASSEMBLY
3 - THROTTLE LEVER

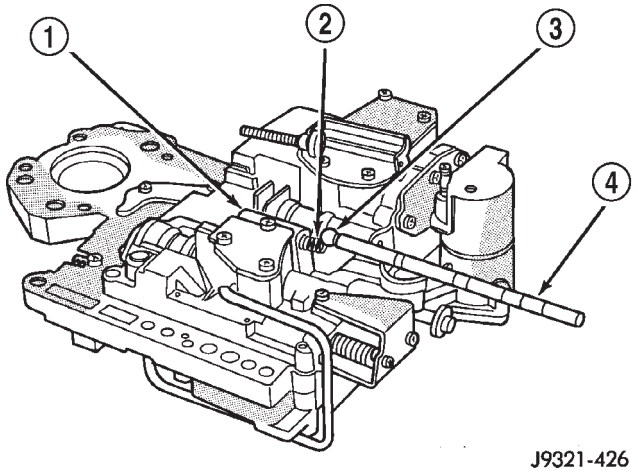

Fig. 294 Detent Ball And Spring

1 - DETENT HOUSING
2 - DETENT SPRING
3 - DETENT BALL
4 - PENCIL MAGNET

VALVE BODY (Continued)

(17) Remove screws attaching pressure adjusting screw bracket to valve body and transfer plate (Fig. 295). Hold bracket firmly against spring tension while removing last screw.

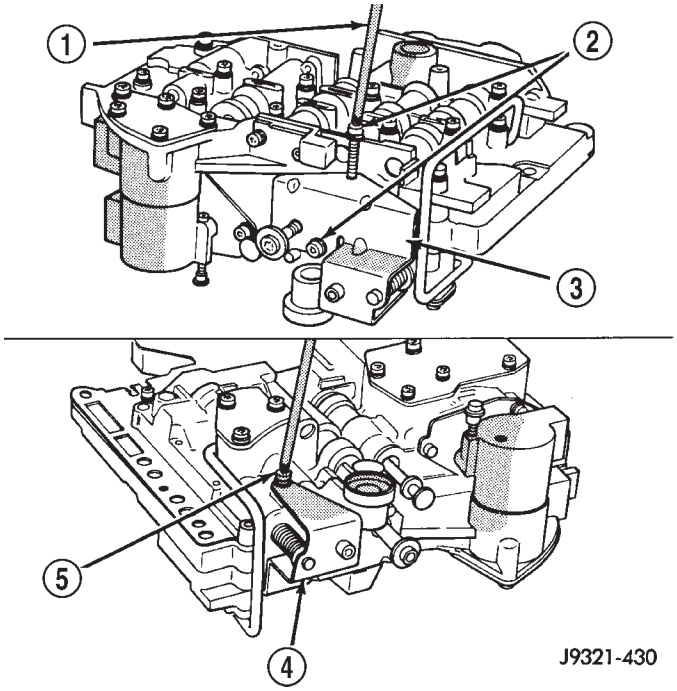

Fig. 295 Adjusting Screw Bracket Fastener

1 - T25 TORX™ BIT
2 - REMOVE THESE SCREWS FIRST
3 - BRACKET
4 - BRACKET
5 - REMOVE THIS SCREW LAST

(18) Remove adjusting screw bracket, line pressure adjusting screw, pressure regulator valve spring and switch valve spring (Fig. 296). Do not remove throttle pressure adjusting screw from bracket and do not disturb setting of either adjusting screw during removal.

(19) Turn upper housing over and remove switch valve, regulator valve and spring, and manual valve (Fig. 297).

(20) Remove kickdown detent, kickdown valve, and throttle valve and spring (Fig. 297).

(21) Loosen left-side 3-4 accumulator housing attaching screw about 2-3 threads. Then remove center and right-side housing attaching screws (Fig. 298).

(22) Carefully rotate 3-4 accumulator housing upward and remove 3-4 shift valve spring and converter clutch valve plug and spring (Fig. 299).

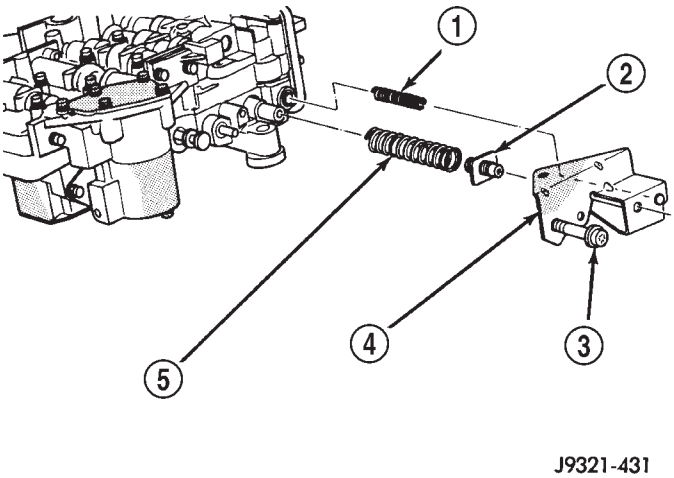

Fig. 296 Adjusting Screw Bracket And Spring

1 - SWITCH VALVE SPRING
2 - LINE PRESSURE SCREW
3 - THROTTLE PRESSURE ADJUSTING SCREW
4 - ADJUSTING SCREW BRACKET
5 - PRESSURE REGULATOR VALVE SPRING

VALVE BODY (Continued)

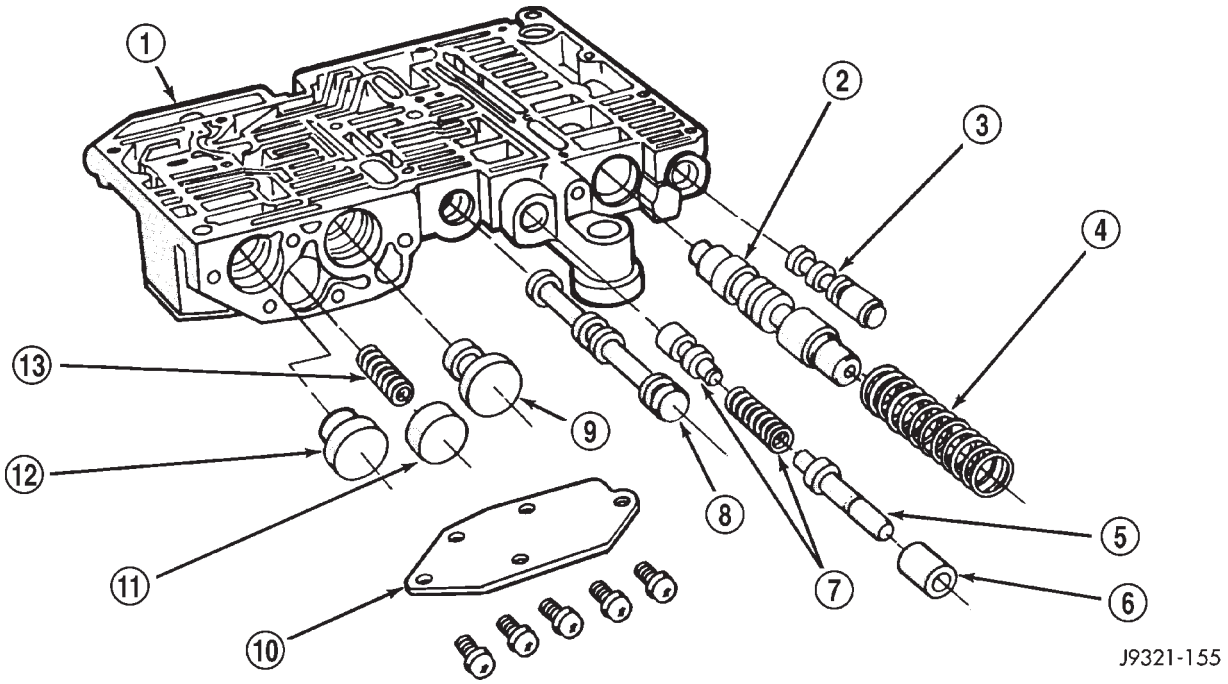

Fig. 297 Upper Housing Control Valve Locations

1 - UPPER HOUSING
2 - REGULATOR VALVE
3 - SWITCH VALVE
4 - REGULATOR VALVE SPRING
5 - KICKDOWN VALVE
6 - KICKDOWN DETENT
7 - THROTTLE VALVE AND SPRING
8 - MANUAL VALVE
9 - 1-2 GOVERNOR PLUG
10 - GOVERNOR PLUG COVER
11 - THROTTLE PLUG
12 - 2-3 GOVERNOR PLUG
13 - SHUTTLE VALVE PRIMARY SPRING

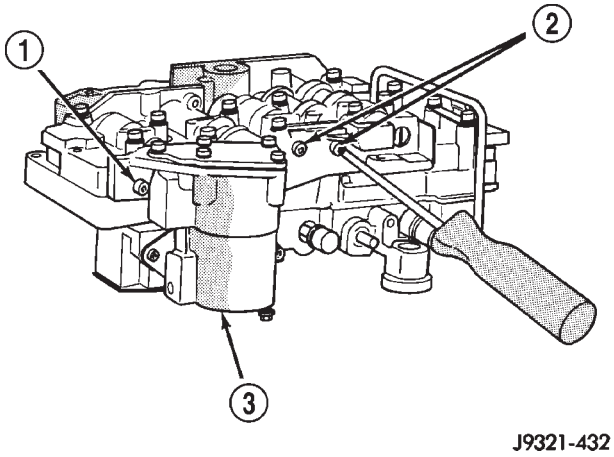

Fig. 298 Accumulator Housing Screw Locations

1 - LOOSEN THIS SCREW
2 - REMOVE THESE SCREWS
3 - 3-4 ACCUMULATOR HOUSING

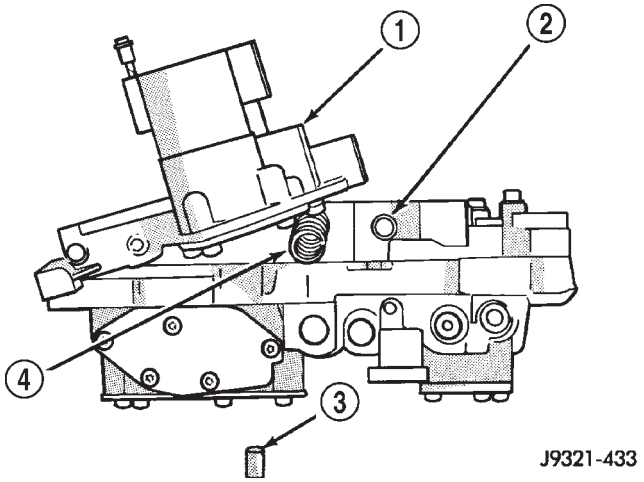

Fig. 299 3-4 Shift And Converter Clutch Valve Springs And Plug

1 - ACCUMULATOR HOUSING
2 - CONVERTER CLUTCH VALVE SPRING
3 - CLUTCH VALVE PLUG
4 - 3-4 SHIFT VALVE SPRING

VALVE BODY (Continued)

(23) Remove left-side screw and remove 3-4 accumulator housing from valve body (Fig. 300).

(24) Bend back tabs on boost valve tube brace (Fig. 301).

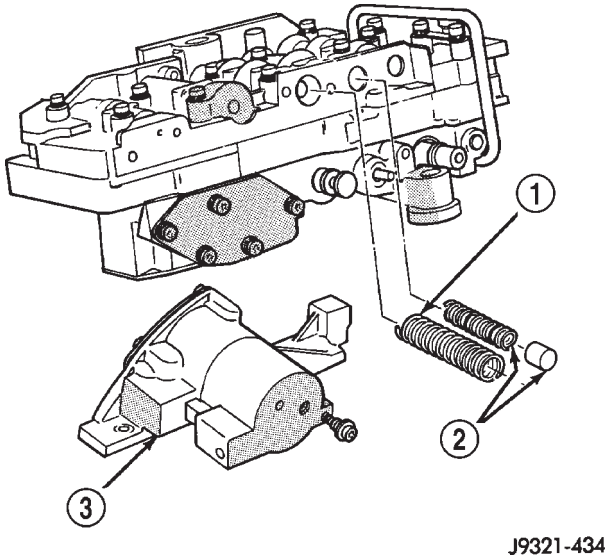

Fig. 300 Accumulator Housing, Valve Springs And Plug

1 - 3-4 SHIFT VALVE SPRING
2 - CONVERTER CLUTCH VALVE SPRING AND PLUG
3 - 3-4 ACCUMULATOR HOUSING

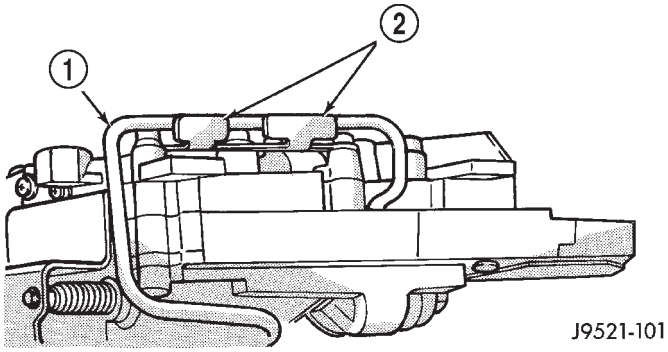

Fig. 301 Boost Valve Tube Brace

1 - BOOST VALVE TUBE
2 - TUBE BRACE (DOUBLE TAB)

(25) Remove boost valve connecting tube (Fig. 302). Disengage tube from upper housing port first. Then rock opposite end of tube back and forth to work it out of lower housing.

CAUTION: Do not use tools to loosen or pry the connecting tube out of the valve body housings. Loosen and remove the tube by hand only.

(26) Turn valve body over so lower housing is facing upward (Fig. 303). In this position, the two check balls in upper housing will remain in place and not fall out when lower housing and separator plate are removed.

(27) Remove screws attaching valve body lower housing to upper housing and transfer plate (Fig. 303). Note position of boost valve tube brace for assembly reference.

(28) Remove lower housing and overdrive separator plate from transfer plate (Fig. 303).

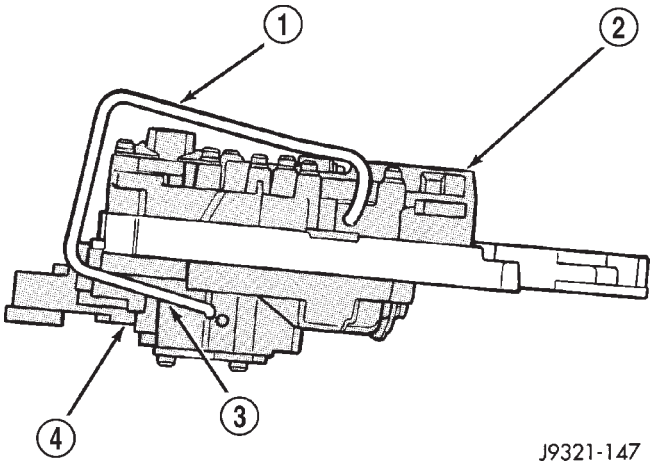

Fig. 302 Boost Valve Tube

1 - BOOST VALVE TUBE
2 - LOWER HOUSING
3 - DISENGAGE THIS END OF TUBE FIRST
4 - UPPER HOUSING

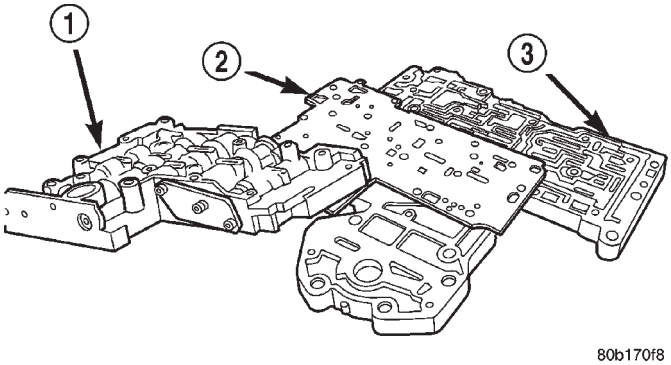

Fig. 303 Lower Housing

1 - LOWER HOUSING
2 - OVERDRIVE SEPARATOR PLATE
3 - TRANSFER PLATE AND UPPER HOUSING

VALVE BODY (Continued)

(29) Remove the ECE check ball from the transfer plate (Fig. 304). The ECE check ball is approximately 4.8 mm (3/16 in.) in diameter.

(30) Remove transfer plate from upper housing (Fig. 305).

(31) Turn transfer plate over so upper housing separator plate is facing upward.

(32) Remove upper housing separator plate from transfer plate (Fig. 306). Note position of filter in separator plate for assembly reference.

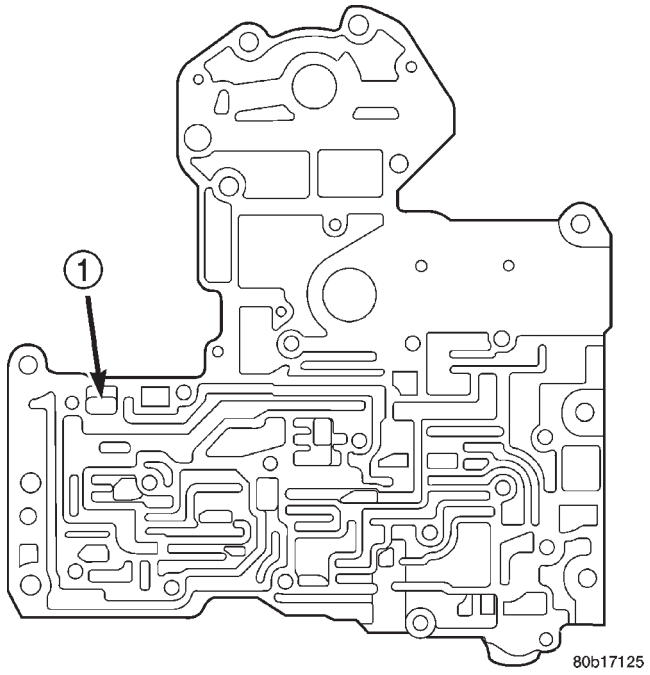

Fig. 304 ECE Check Ball

1 - ECE CHECK BALL (3/16″)

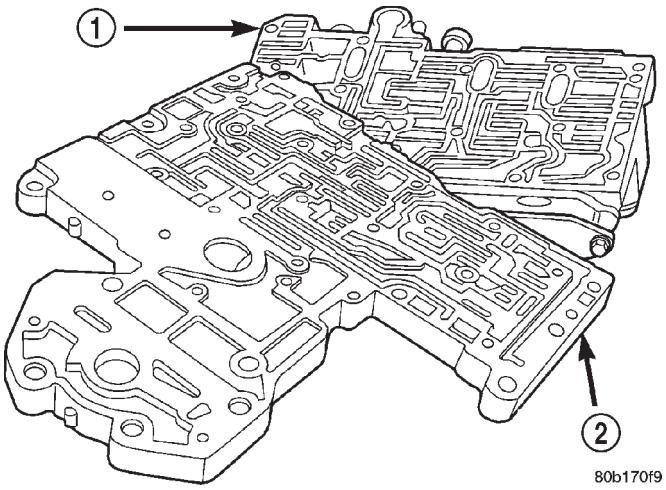

Fig. 305 Transfer Plate

1 - UPPER HOUSING
2 - TRANSFER PLATE

(33) Remove rear clutch and rear servo check balls from transfer plate. Note check ball location for assembly reference (Fig. 307).

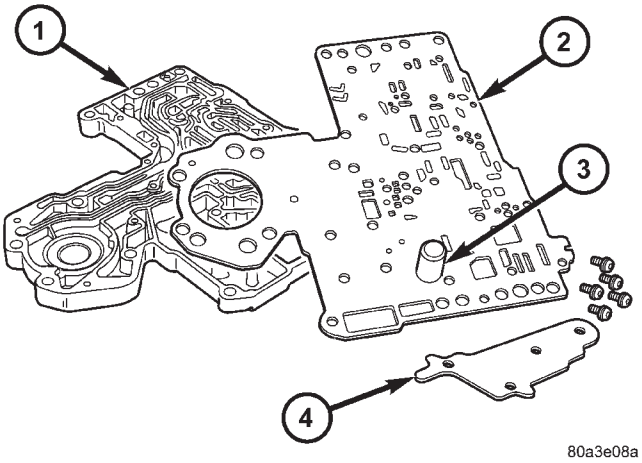

Fig. 306 Upper Housing Separator Plate

1 - TRANSFER PLATE
2 - UPPER HOUSING SEPARATOR PLATE
3 - FILTER SCREEN
4 - BRACE

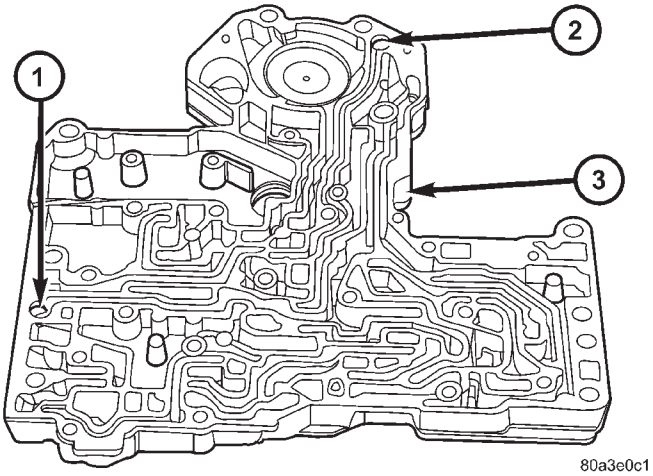

Fig. 307 Rear Clutch And Rear Servo Check Ball

1 - REAR CLUTCH CHECK BALL
2 - REAR SERVO CHECK BALL
3 - TRANSFER PLATE

VALVE BODY (Continued)

VALVE BODY UPPER HOUSING

(1) Note location of check balls in valve body upper housing (Fig. 308). Then remove the one large diameter and the six smaller diameter check balls.

(2) Remove governor plug and shuttle valve covers (Fig. 310).

(3) Remove E-clip that secures shuttle valve secondary spring on valve stem (Fig. 309).

(4) Remove throttle plug, primary spring, shuttle valve, secondary spring, and spring guides (Fig. 310).

(5) Remove boost valve retainer, spring and valve if not previously removed.

(6) Remove throttle plug and 1-2 and 2-3 governor plugs (Fig. 297).

(7) Turn upper housing around and remove limit valve and shift valve covers (Fig. 311).

(8) Remove limit valve housing. Then remove retainer, spring, limit valve, and 2-3 throttle plug from limit valve housing (Fig. 311).

(9) Remove 1-2 shift control valve and spring (Fig. 311).

(10) Remove 1-2 shift valve and spring (Fig. 311).

(11) Remove 2-3 shift valve and spring from valve body (Fig. 311).

(12) Remove pressure plug cover (Fig. 311).

(13) Remove line pressure plug, sleeve, throttle pressure plug and spring (Fig. 311).

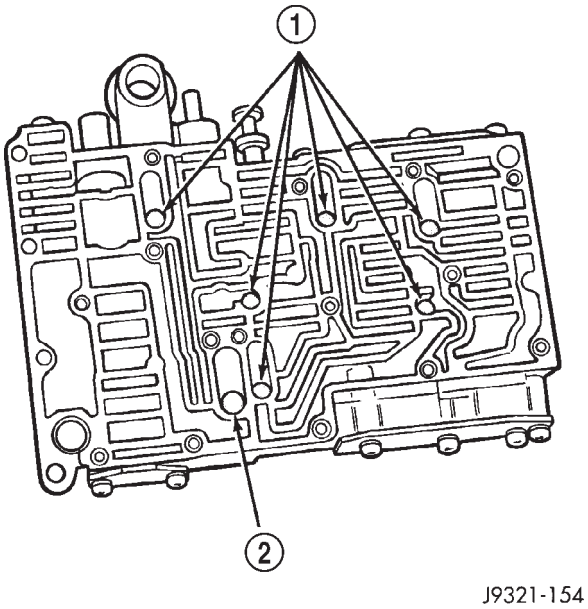

Fig. 308 Check Ball Locations In Upper Housing

1 - SMALL DIAMETER CHECK BALLS (6)
2 - LARGE DIAMETER CHECK BALL (1)

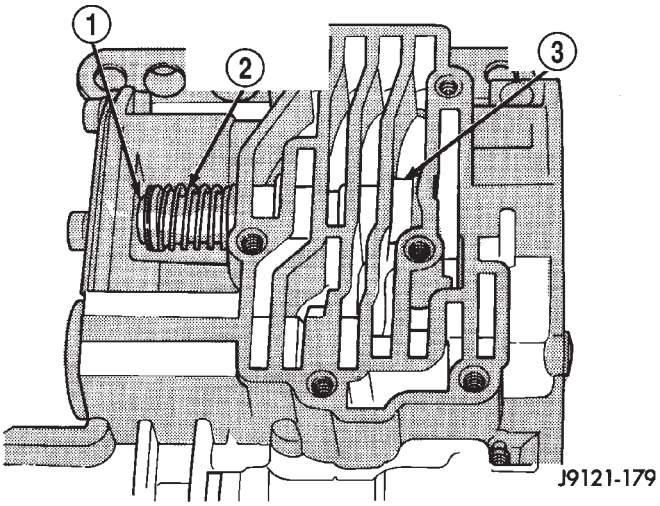

Fig. 309 Shuttle Valve E-Clip And Secondary Spring Location

1 - E-CLIP
2 - SECONDARY SPRING AND GUIDES
3 - SHUTTLE VALVE

VALVE BODY (Continued)

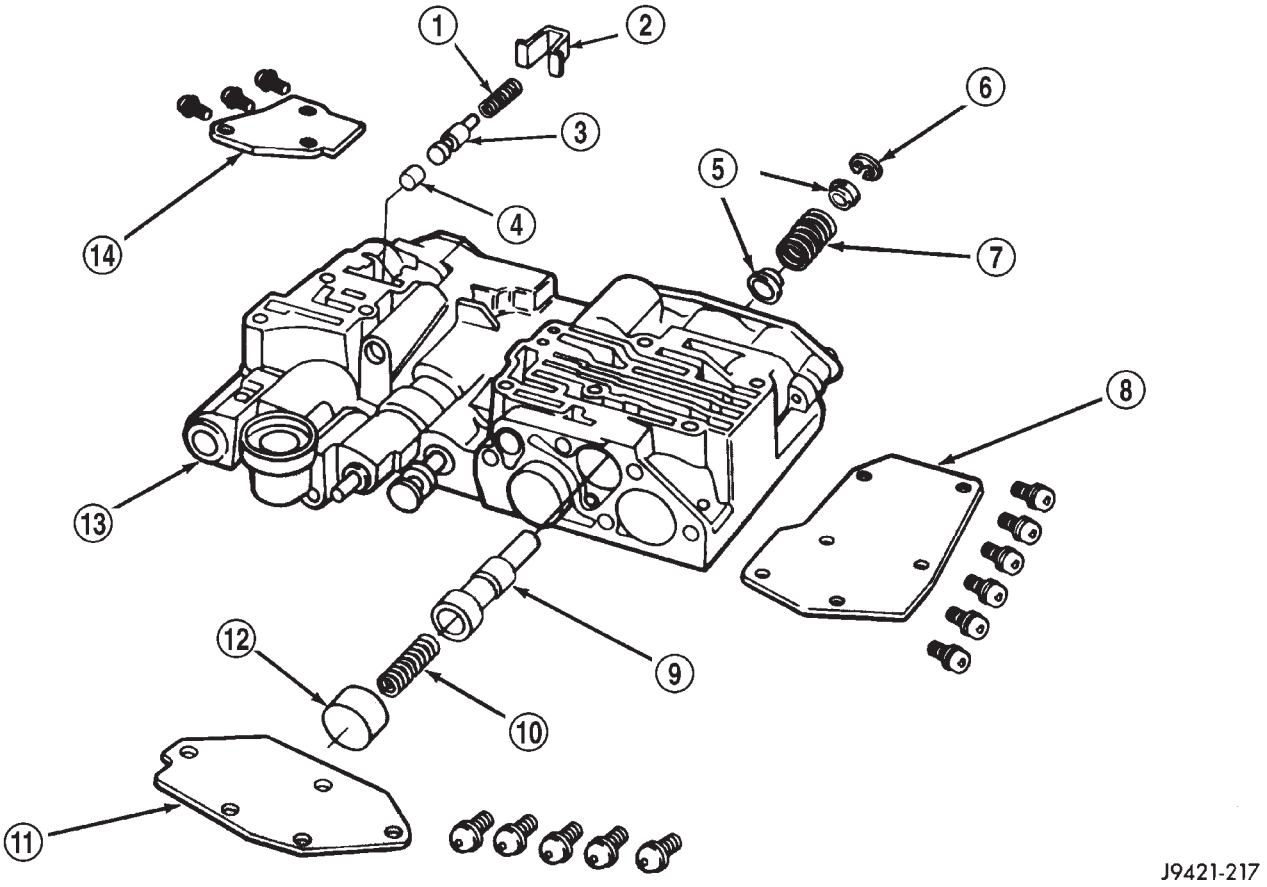

Fig. 310 Shuttle And Boost Valve Components

1 - SPRING
2 - RETAINER
3 - BOOST VALVE
4 - BOOST VALVE PLUG
5 - SPRING GUIDES
6 - E-CLIP
7 - SHUTTLE VALVE SECONDARY SPRING
8 - SHUTTLE VALVE COVER
9 - SHUTTLE VALVE
10 - SHUTTLE VALVE PRIMARY SPRING
11 - GOVERNOR PLUG COVER
12 - THROTTLE PLUG
13 - UPPER HOUSING
14 - BOOST VALVE COVER

VALVE BODY (Continued)

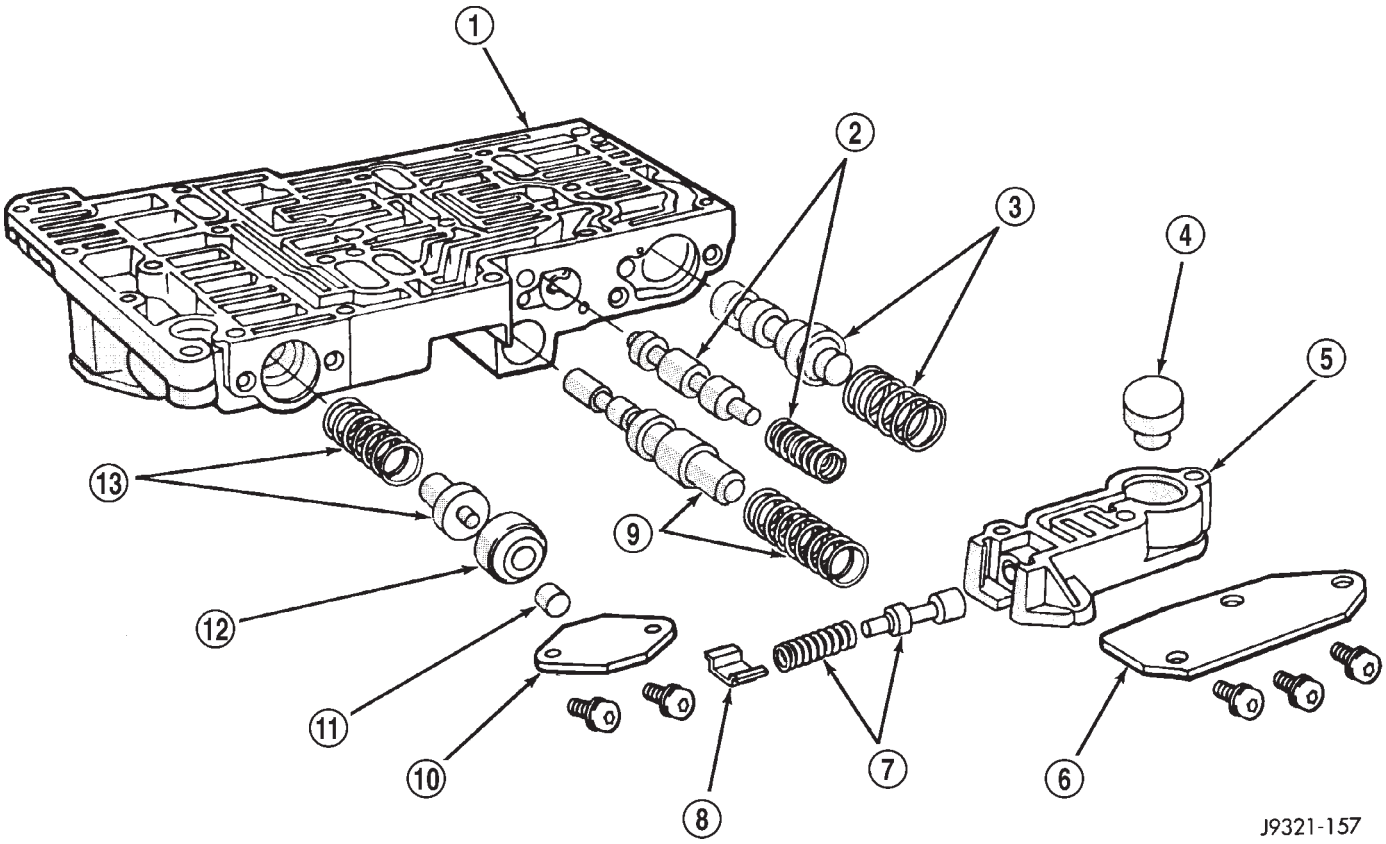

Fig. 311 Upper Housing Shift Valve And Pressure Plug Locations

1 - UPPER HOUSING
2 - 1-2 SHIFT VALVE AND SPRING
3 - 2-3 SHIFT VALVE AND SPRING
4 - 2-3 THROTTLE PLUG
5 - LIMIT VALVE HOUSING
6 - LIMIT VALVE COVER
7 - LIMIT VALVE AND SPRING
8 - RETAINER
9 - 1-2 SHIFT CONTROL VALVE AND SPRING
10 - PRESSURE PLUG COVER
11 - LINE PRESSURE PLUG
12 - PLUG SLEEVE
13 - THROTTLE PRESSURE SPRING AND PLUG

VALVE BODY (Continued)

VALVE BODY LOWER HOUSING

(1) Remove timing valve cover.
(2) Remove 3-4 timing valve and spring.
(3) Remove 3-4 quick fill valve, spring and plug.
(4) Remove 3-4 shift valve and spring.
(5) Remove converter clutch valve, spring and plug (Fig. 312).
(6) Remove converter clutch timing valve, retainer and valve spring.

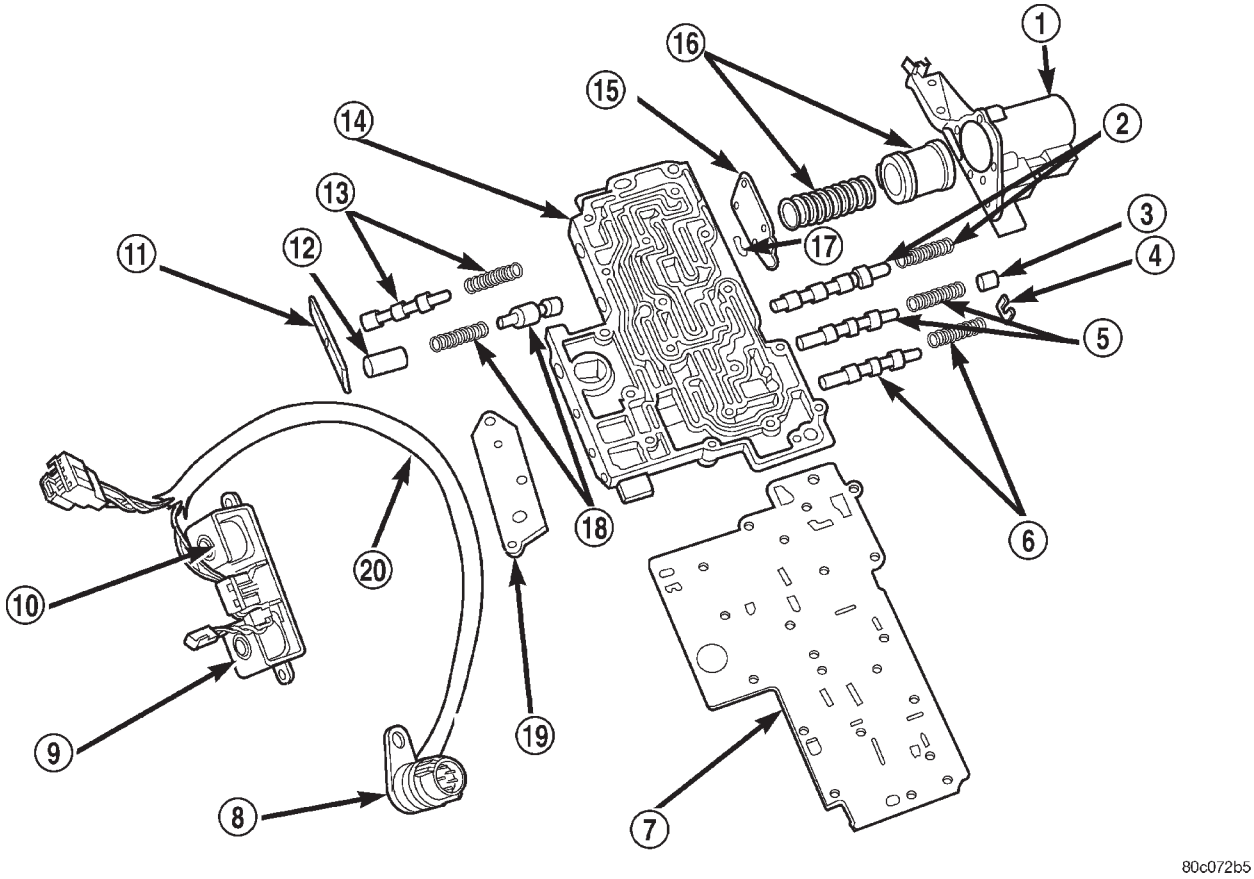

Fig. 312 Lower Housing Shift Valves and Springs

1 - 3-4 ACCUMULATOR HOUSING
2 - 3-4 SHIFT VALVE AND SPRING
3 - PLUG
4 - SPRING RETAINER
5 - CONVERTER CLUTCH VALVE AND SPRING
6 - CONVERTER CLUTCH TIMING VALVE AND SPRING
7 - OVERDRIVE SEPARATOR PLATE
8 - CASE CONNECTOR
9 - CONVERTER CLUTCH SOLENOID
10 - OVERDRIVE SOLENOID
11 - TIMING VALVE COVER
12 - PLUG
13 - 3-4 TIMING VALVE AND SPRING
14 - LOWER HOUSING
15 - ACCUMULATOR END PLATE
16 - 3-4 ACCUMULATOR PISTON AND SPRING
17 - E-CLIP
18 - 3-4 QUICK FILL SPRING AND VALVE
19 - SOLENOID GASKET
20 - HARNESS

VALVE BODY (Continued)

3-4 ACCUMULATOR HOUSING

(1) Remove end plate from housing.
(2) Remove piston spring.
(3) Remove piston. Remove and discard piston seals (Fig. 313).

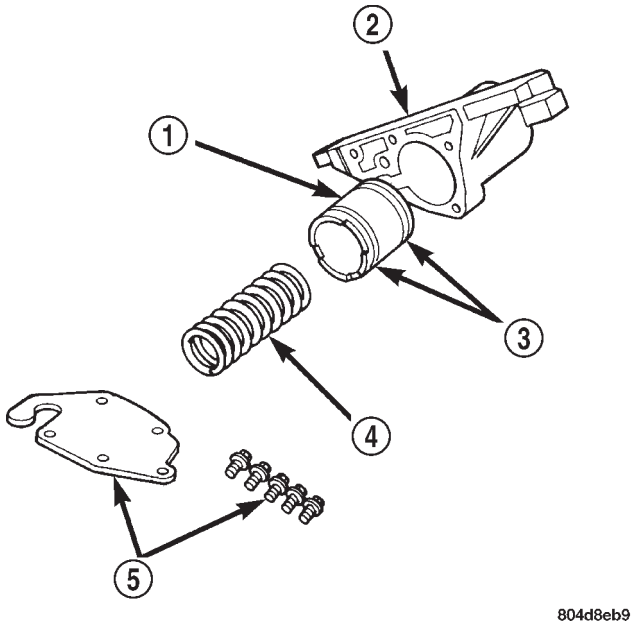

Fig. 313 Accumulator Housing Components

1 - ACCUMULATOR PISTON
2 - 3-4 ACCUMULATOR HOUSING
3 - TEFLON SEALS
4 - PISTON SPRING
5 - COVER PLATE AND SCREWS

CLEANING

Clean the valve housings, valves, plugs, springs, and separator plates with a standard parts cleaning solution only. Do not use gasoline, kerosene, or any type of caustic solution.

Do not immerse any of the electrical components in cleaning solution. Clean the governor solenoid and sensor and the dual solenoid and harness assembly by wiping them off with dry shop towels only.

Dry all except the electrical parts with compressed air. Make sure all passages are clean and free from obstructions. **Do not use rags or shop towels to dry or wipe off valve body components. Lint from these materials can stick to valve body parts, interfere with valve operation, and clog filters and fluid passages.**

Wipe the governor pressure sensor and solenoid valve with dry, lint free shop towels only. The O-rings on the sensor and solenoid valve are the only serviceable components. Be sure the vent ports in the solenoid valve are open and not blocked by dirt or debris. Replace the valve and/or sensor only when DRB scan tool diagnosis indicates this is necessary. Or, if either part has sustained physical damage (dented, deformed, broken, etc.).

CAUTION: Do not turn the small screw at the end of the solenoid valve for any reason. Turning the screw in either direction will ruin solenoid calibration and result in solenoid failure. In addition, the filter on the solenoid valve is NOT serviceable. Do not try to remove the filter as this will damage the valve housing.

INSPECTION

Inspect the throttle and manual valve levers and shafts. Do not attempt to straighten a bent shaft or correct a loose lever. Replace these components if worn, bent, loose or damaged in any way.

Inspect all of the valve body mating surfaces for scratches, nicks, burrs, or distortion. Use a straightedge to check surface flatness. Minor scratches may be removed with crocus cloth using only very light pressure.

Minor distortion of a valve body mating surface may be corrected by smoothing the surface with a sheet of crocus cloth. Position the crocus cloth on a surface plate, sheet of plate glass or equally flat surface. If distortion is severe or any surfaces are heavily scored, the valve body will have to be replaced.

CAUTION: Many of the valves and plugs, such as the throttle valve, shuttle valve plug, 1-2 shift valve and 1-2 governor plug, are made of coated aluminum. Aluminum components are identified by the dark color of the special coating applied to the surface (or by testing with a magnet). Do not sand aluminum valves or plugs under any circumstances. This practice could damage the special coating causing the valves/plugs to stick and bind.

Inspect the valves and plugs for scratches, burrs, nicks, or scores. Minor surface scratches on steel valves and plugs can be removed with crocus cloth but **do not round off the edges of the valve or plug lands.**Maintaining sharpness of these edges is vitally important. The edges prevent foreign matter from lodging between the valves and plugs and the bore.

Inspect all the valve and plug bores in the valve body. Use a penlight to view the bore interiors. Replace the valve body if any bores are distorted or scored. Inspect all of the valve body springs. The springs must be free of distortion, warpage or broken coils.

Check the two separator plates for distortion or damage of any kind. Inspect the upper housing, lower housing, 3-4 accumulator housing, and transfer

VALVE BODY (Continued)

plate carefully. Be sure all fluid passages are clean and clear. Check condition of the upper housing and transfer plate check balls as well. The check balls and ball seats must not be worn or damaged.

Trial fit each valve and plug in its bore to check freedom of operation. When clean and dry, the valves and plugs should drop freely into the bores.

Valve body bores do not change dimensionally with use. If the valve body functioned correctly when new, it will continue to operate properly after cleaning and inspection. It should not be necessary to replace a valve body assembly unless it is damaged in handling.

The only serviceable valve body components are listed below. The remaining valve body components are serviced only as part of a complete valve body assembly. Serviceable parts are:

- dual solenoid and harness assembly
- solenoid gasket
- solenoid case connector O-rings and shoulder bolt
- switch valve and spring
- pressure adjusting screw and bracket assembly
- throttle lever
- manual lever and shaft seal
- throttle lever shaft seal, washer, and E-clip
- fluid filter and screws
- detent ball and spring
- valve body screws
- governor pressure solenoid
- governor pressure sensor and retaining clip
- park lock rod and E-clip

ASSEMBLY

CAUTION: Do not force valves or plugs into place during reassembly. If the valve body bores, valves and plugs are free of distortion or burrs, the valve body components should all slide into place easily. In addition, do not overtighten the transfer plate and valve body screws during reassembly. Overtightening can distort the housings resulting in valve sticking, cross leakage and unsatisfactory operation. Tighten valve body screws to recommended torque only.

LOWER HOUSING

(1) Lubricate valves, springs, and the housing valve and plug bores with clean transmission fluid (Fig. 312).

(2) Install 3-4 timing valve spring and valve in lower housing.

(3) Install 3-4 quick fill valve in lower housing.

(4) Install 3-4 quick fill valve spring and plug in housing.

(5) Install timing valve end plate. Tighten end plate screws to 4 N·m (35 in. lbs.) torque.

3-4 ACCUMULATOR

(1) Lubricate accumulator piston, seals and housing piston bore with clean transmission fluid (Fig. 313).

(2) Install new seal rings on accumulator piston.

(3) Install piston and spring in housing.

(4) Install end plate on housing.

TRANSFER PLATE

(1) Install rear clutch and rear servo check balls in transfer plate (Fig. 314).

(2) Install filter screen in upper housing separator plate (Fig. 315).

(3) Align and position upper housing separator plate on transfer plate (Fig. 316).

(4) Install brace plate (Fig. 316). Tighten brace attaching screws to 4 N·m (35 in. lbs.) torque.

(5) Install remaining separator plate attaching screws. Tighten screws to 4 N·m (35 in. lbs.) torque.

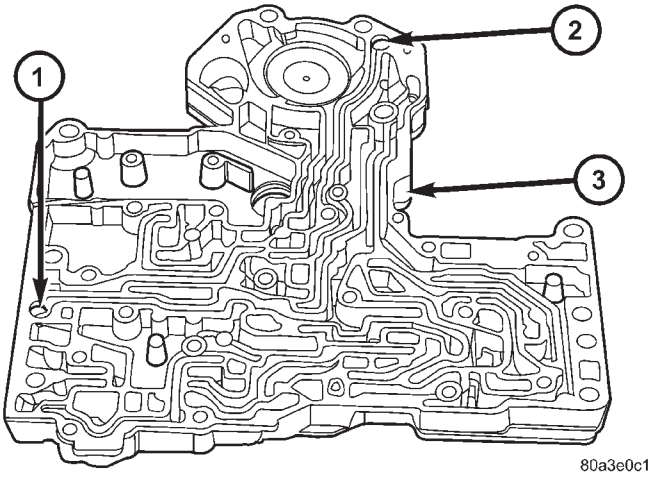

Fig. 314 Rear Clutch And Rear Servo Check Ball Locations

1 - REAR CLUTCH CHECK BALL
2 - REAR SERVO CHECK BALL
3 - TRANSFER PLATE

VALVE BODY (Continued)

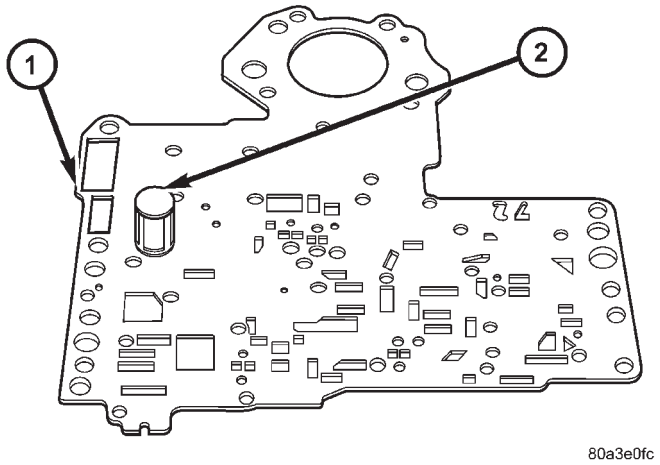

Fig. 315 Separator Plate Filter Screen Installation

1 - UPPER HOUSING SEPARATOR PLATE
2 - FILTER SCREEN

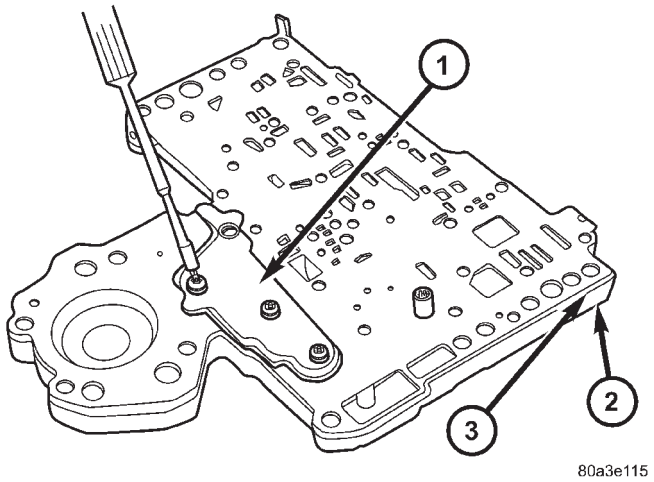

Fig. 316 Brace Plate

1 - BRACE
2 - TRANSFER PLATE
3 - SEPARATOR PLATE

UPPER AND LOWER HOUSING

(1) Position upper housing so internal passages and check ball seats are facing upward. Then install check balls in housing (Fig. 317). Eight check balls are used. The single large check ball is approximately 8.7 mm (11/32 in.) diameter. The single small check ball is approximately 4.8 mm (3/16 in.) in diameter. The remaining 6 check balls are approximately 6.3 mm (1/4 in.) in diameter.

(2) Position assembled transfer plate and upper housing separator plate on upper housing (Fig. 318). Be sure filter screen is seated in proper housing recess.

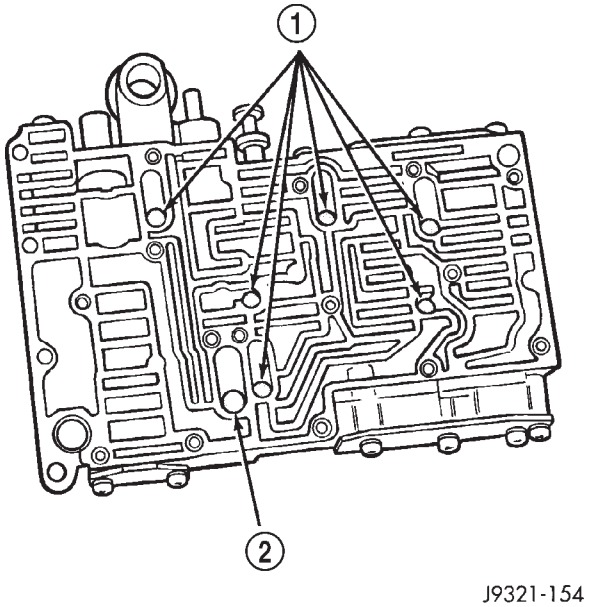

Fig. 317 Check Ball Locations In Upper Housing

1 - SMALL DIAMETER CHECK BALLS (6)
2 - LARGE DIAMETER CHECK BALL (1)

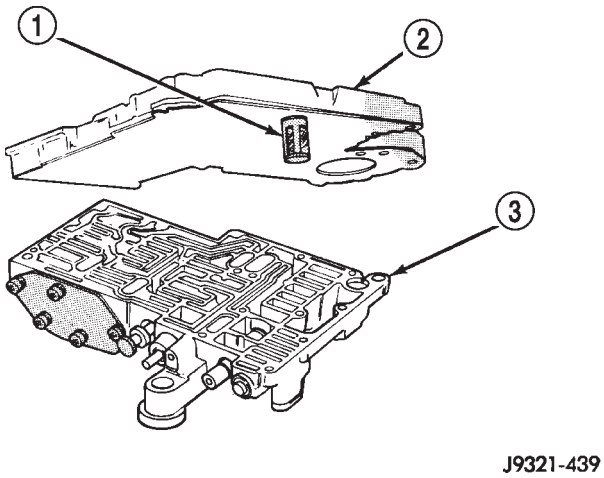

Fig. 318 Installing Transfer Plate On Upper Housing

1 - FILTER SCREEN
2 - TRANSFER PLATE/SEPARATOR PLATE ASSEMBLY
3 - UPPER HOUSING

VALVE BODY (Continued)

(3) Install the ECE check ball into the transfer plate (Fig. 304). The ECE check ball is approximately 4.8 mm (3/16 in.) in diameter.

(4) Position lower housing separator plate on transfer plate (Fig. 319).

(5) Install lower housing on assembled transfer plate and upper housing (Fig. 320).

(6) Install and start all valve body screws by hand except for the screws to hold the boost valve tube brace. Save those screws for later installation. Then tighten screws evenly to 4 N·m (35 in. lbs.) torque. Start at center and work out to sides when tightening screws (Fig. 320).

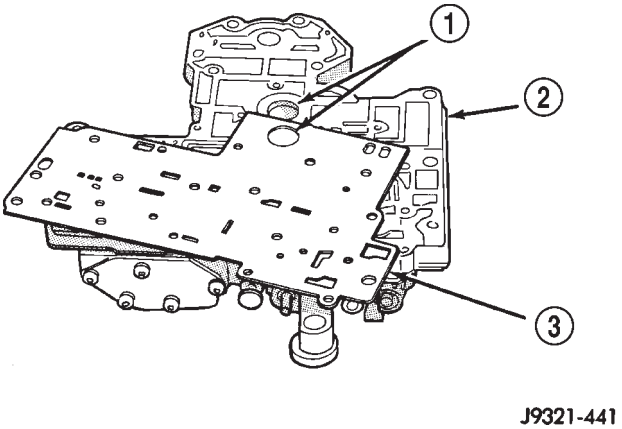

Fig. 319 Lower Housing Separator Plate

1 - BE SURE TO ALIGN BORES
2 - TRANSFER PLATE
3 - LOWER HOUSING (OVERDRIVE) SEPARATOR PLATE

UPPER HOUSING VALVE AND PLUG

Refer to (Fig. 321), (Fig. 322) and (Fig. 323) to perform the following steps.

(1) Lubricate valves, plugs, springs with clean transmission fluid.

(2) Assemble regulator valve line pressure plug, sleeve, throttle plug and spring. Insert assembly in upper housing and install cover plate. Tighten cover plate screws to 4 N·m (35 in. lbs.) torque.

(3) Install 1-2 and 2-3 shift valves and springs.

(4) Install 1-2 shift control valve and spring.

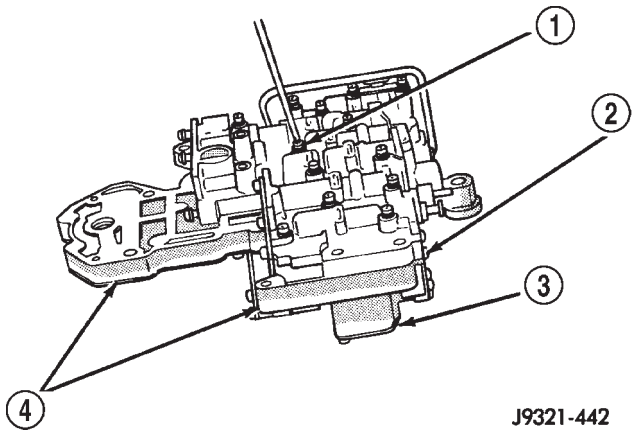

Fig. 320 Installing Lower Housing On Transfer Plate And Upper Housing

1 - VALVE BODY SCREWS (13)
2 - LOWER HOUSING
3 - UPPER HOUSING
4 - TRANSFER PLATE

(5) Install retainer, spring, limit valve, and 2-3 throttle plug from limit valve housing.

(6) Install limit valve housing and cover plate. Tighten screws to 4 N·m (35 in. lbs.).

(7) Install shuttle valve as follows:

(a) Insert plastic guides in shuttle valve secondary spring and install spring on end of valve.

(b) Install shuttle valve into housing.

(c) Hold shuttle valve in place.

(d) Compress secondary spring and install E-clip in groove at end of shuttle valve.

(e) Verify that spring and E-clip are properly seated before proceeding.

(8) Install shuttle valve cover plate. Tighten cover plate screws to 4 N·m (35 in. lbs.) torque.

(9) Install 1-2 and 2-3 valve governor plugs in valve body.

(10) Install shuttle valve primary spring and throttle plug.

(11) Align and install governor plug cover. Tighten cover screws to 4 N·m (35 in. lbs.) torque.

VALVE BODY (Continued)

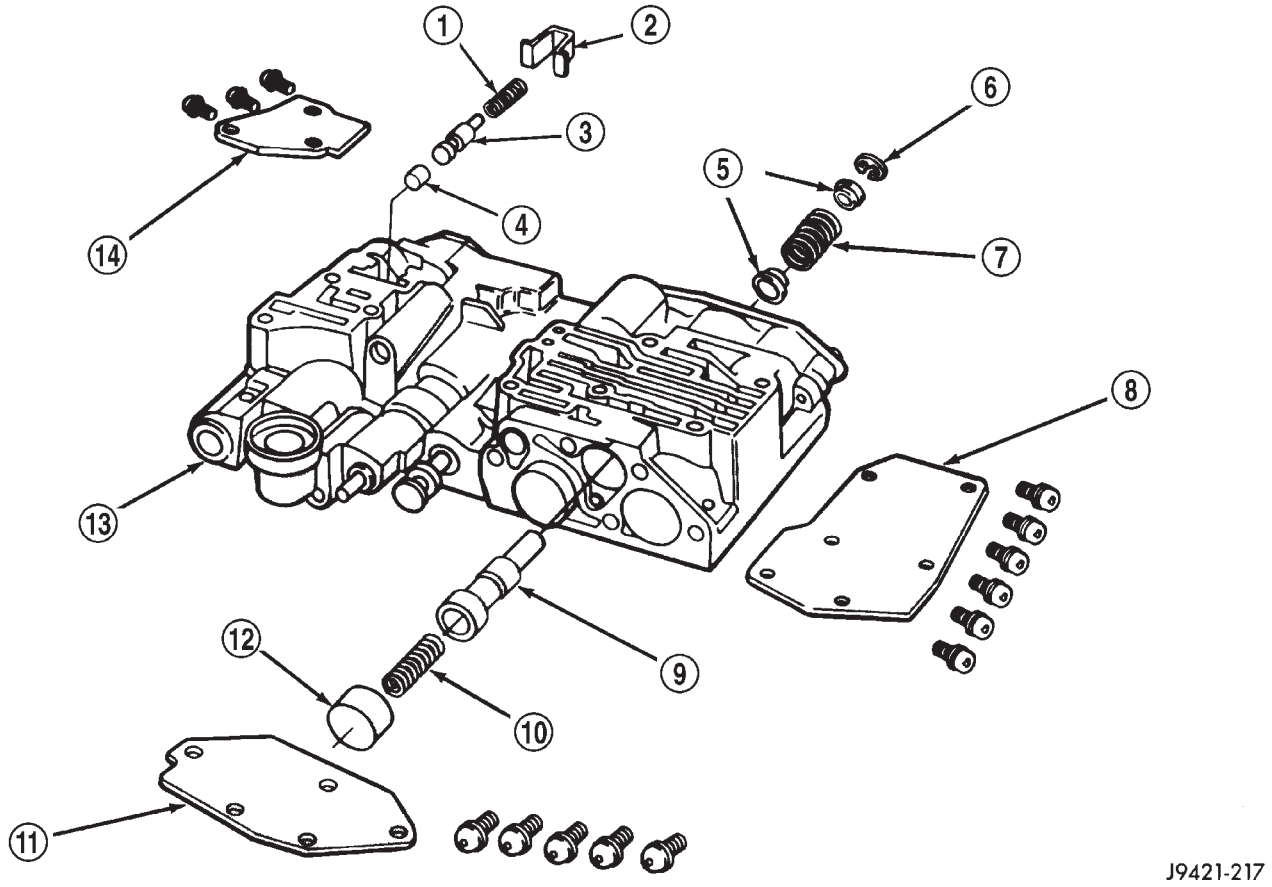

Fig. 321 Shuttle And Boost Valve Components

1 - SPRING
2 - RETAINER
3 - BOOST VALVE
4 - BOOST VALVE PLUG
5 - SPRING GUIDES
6 - E-CLIP
7 - SHUTTLE VALVE SECONDARY SPRING
8 - SHUTTLE VALVE COVER
9 - SHUTTLE VALVE
10 - SHUTTLE VALVE PRIMARY SPRING
11 - GOVERNOR PLUG COVER
12 - THROTTLE PLUG
13 - UPPER HOUSING
14 - BOOST VALVE COVER

VALVE BODY (Continued)

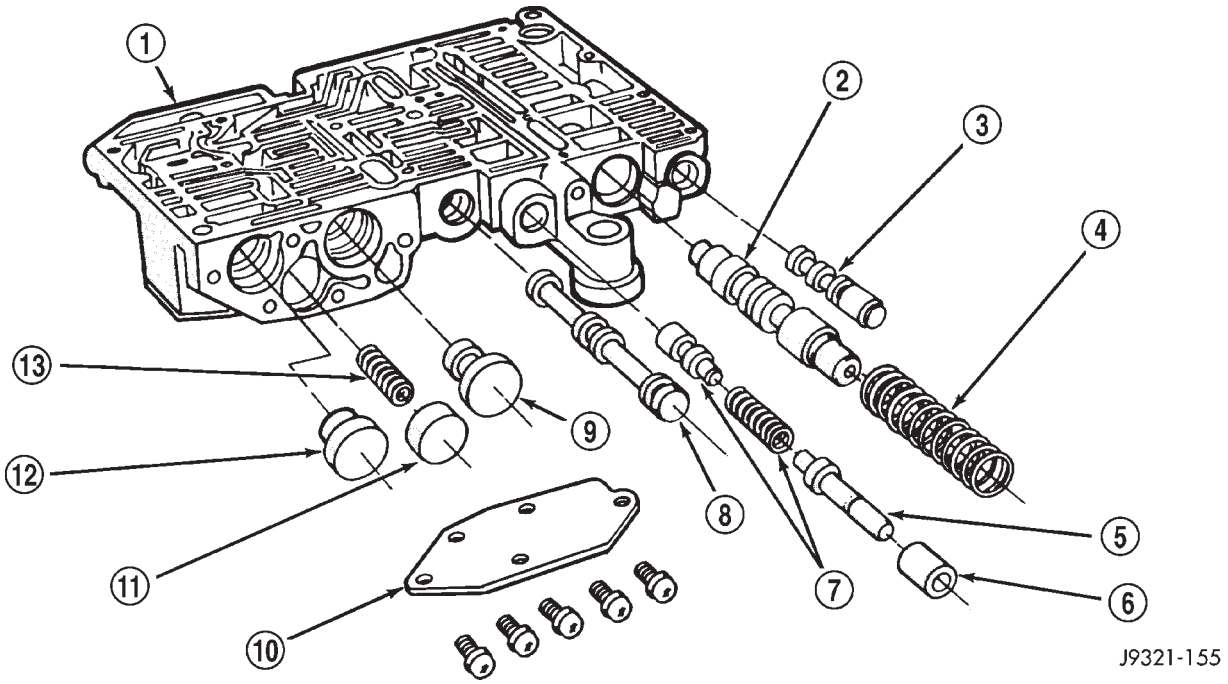

Fig. 322 Upper Housing Control Valve Locations

1 - UPPER HOUSING
2 - REGULATOR VALVE
3 - SWITCH VALVE
4 - REGULATOR VALVE SPRING
5 - KICKDOWN VALVE
6 - KICKDOWN DETENT
7 - THROTTLE VALVE AND SPRING
8 - MANUAL VALVE
9 - 1-2 GOVERNOR PLUG
10 - GOVERNOR PLUG COVER
11 - THROTTLE PLUG
12 - 2-3 GOVERNOR PLUG
13 - SHUTTLE VALVE PRIMARY SPRING

VALVE BODY (Continued)

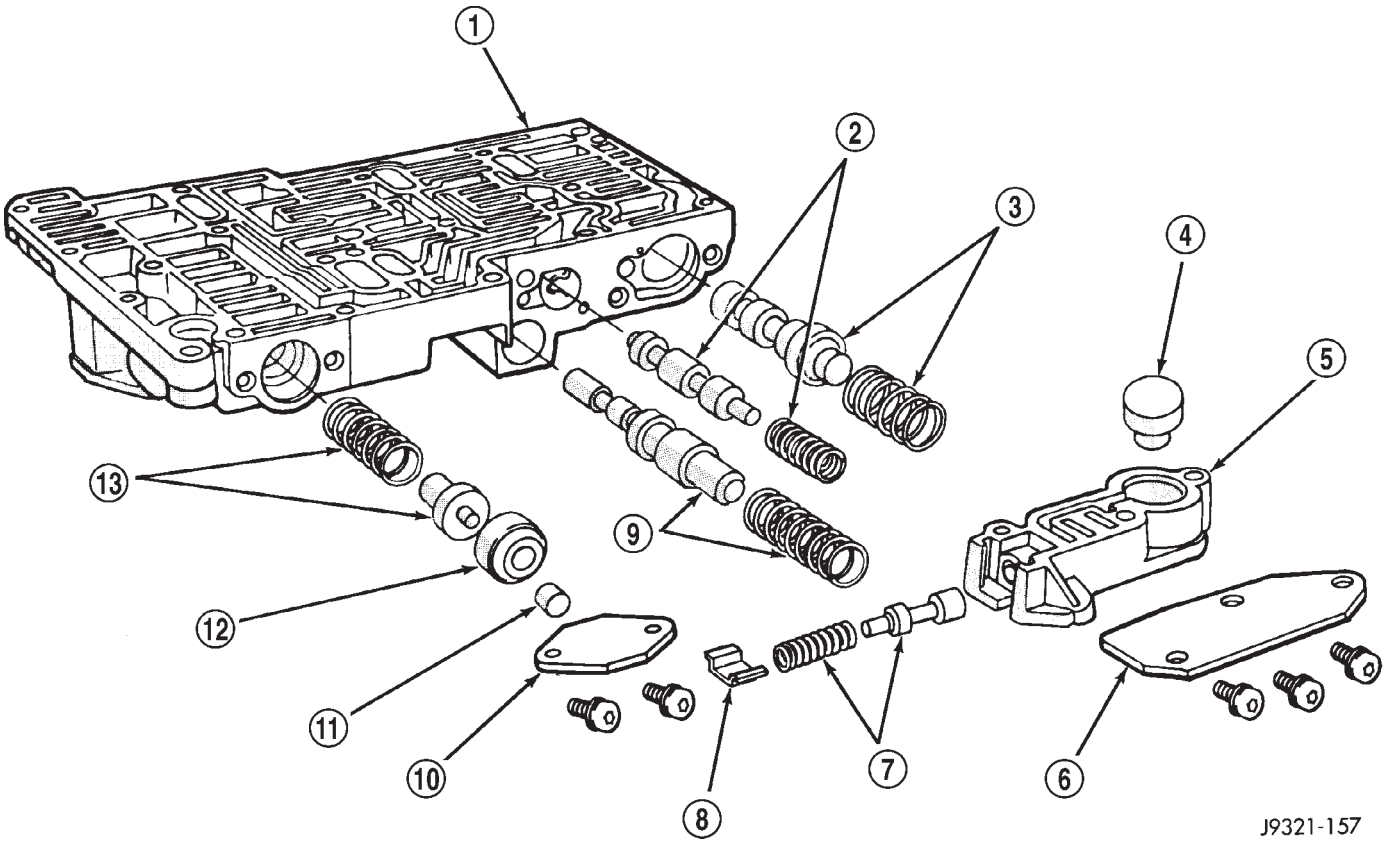

Fig. 323 Upper Housing Shift Valve And Pressure Plug Locations

1 - UPPER HOUSING
2 - 1-2 SHIFT VALVE AND SPRING
3 - 2-3 SHIFT VALVE AND SPRING
4 - 2-3 THROTTLE PLUG
5 - LIMIT VALVE HOUSING
6 - LIMIT VALVE COVER
7 - LIMIT VALVE AND SPRING
8 - RETAINER
9 - 1-2 SHIFT CONTROL VALVE AND SPRING
10 - PRESSURE PLUG COVER
11 - LINE PRESSURE PLUG
12 - PLUG SLEEVE
13 - THROTTLE PRESSURE SPRING AND PLUG

VALVE BODY (Continued)

BOOST VALVE TUBE AND BRACE

(1) Position valve body assembly so lower housing is facing upward (Fig. 324).

(2) Lubricate tube ends and housing ports with transmission fluid or petroleum jelly.

(3) Start tube in lower housing port first. Then swing tube downward and work opposite end of tube into upper housing port (Fig. 324).

(4) Insert and seat each end of tube in housings.

(5) Slide tube brace under tube and into alignment with valve body screw holes (Fig. 325).

(6) Install and finger tighten three screws that secure tube brace to valve body housings (Fig. 325).

(7) Bend tube brace tabs up and against tube to hold it in position (Fig. 326).

(8) Tighten all valve body housing screws to 4 N·m (35 in. lbs.) torque after tube and brace are installed. Tighten screws in diagonal pattern starting at center and working outward.

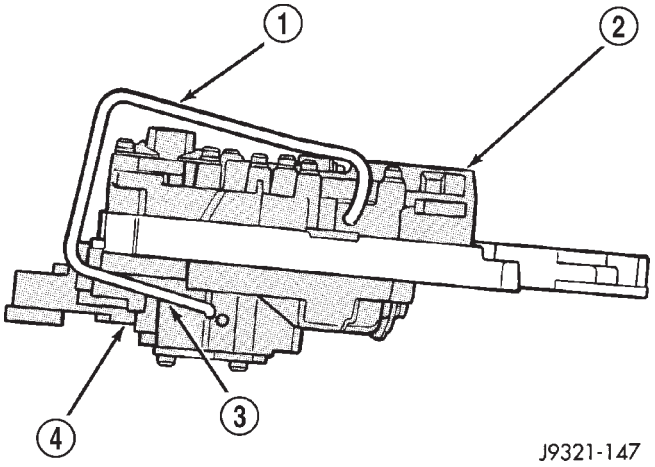

Fig. 324 Boost Valve Tube

1 - BOOST VALVE TUBE
2 - LOWER HOUSING
3 - DISENGAGE THIS END OF TUBE FIRST
4 - UPPER HOUSING

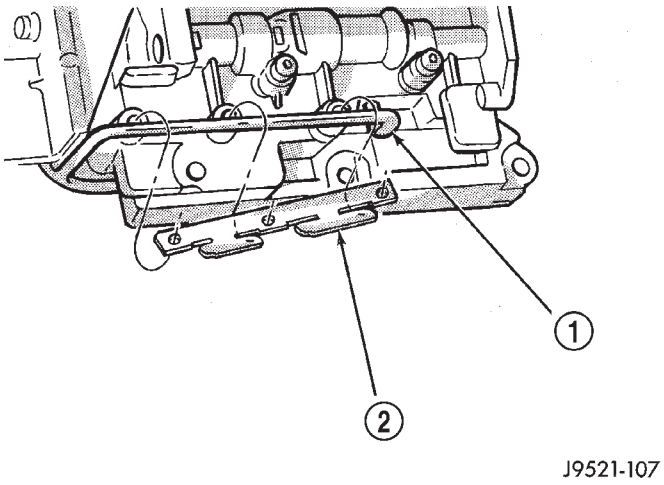

Fig. 325 Boost Valve Tube And Brace

1 - BOOST VALVE TUBE
2 - TUBE BRACE

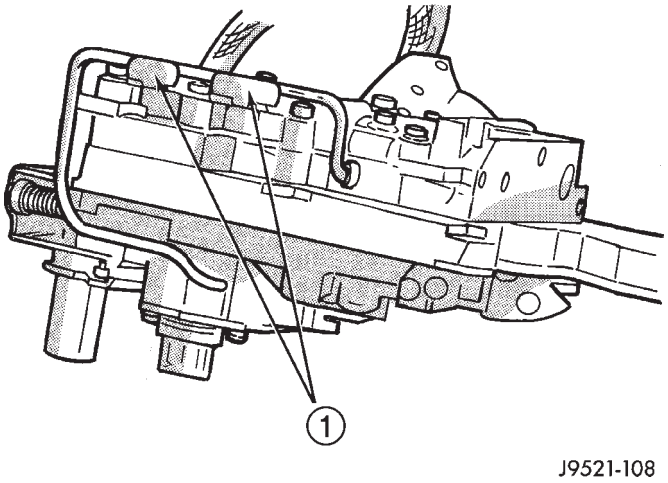

Fig. 326 Securing Boost Valve Tube With Brace Tabs

1 - BEND TABS UP AGAINST TUBE AS SHOWN

VALVE BODY (Continued)

3-4 ACCUMULATOR

(1) Position converter clutch valve and 3-4 shift valve springs in housing (Fig. 327).

(2) Loosely attach accumulator housing with right-side screw (Fig. 327). Install only one screw at this time as accumulator must be free to pivot upward for ease of installation.

(3) Install 3-4 shift valve and spring.

(4) Install converter clutch timing valve and spring.

(5) Position plug on end of converter clutch valve spring. Then compress and hold springs and plug in place with fingers of one hand.

(6) Swing accumulator housing upward over valve springs and plug.

(7) Hold accumulator housing firmly in place and install remaining two attaching screws. Be sure springs and clutch valve plug are properly seated (Fig. 328). Tighten screws to 4 N·m (35 in. lbs.).

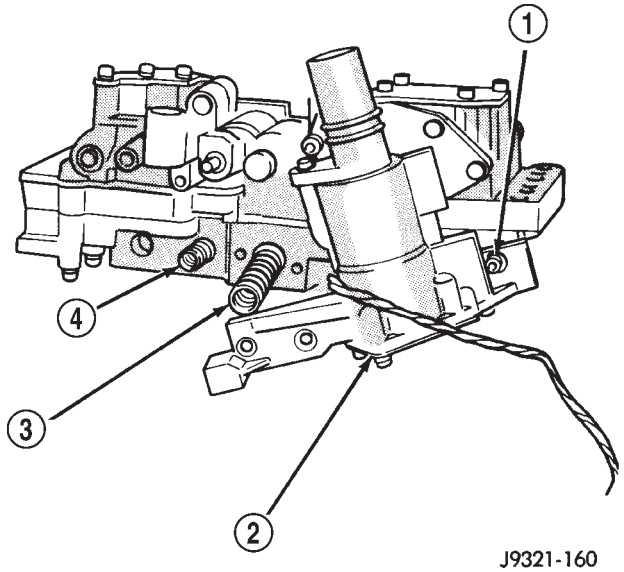

Fig. 327 Converter Clutch And 3-4 Shift Valve Springs

1 - RIGHT-SIDE SCREW
2 - 3-4 ACCUMULATOR
3 - 3-4 SHIFT VALVE SPRING
4 - CONVERTER CLUTCH VALVE SPRING

VALVE BODY FINAL

(1) Install boost valve, valve spring, retainer and cover plate. Tighten cover plate screws to 4 N·m (35 in. lbs.) torque.

(2) Insert manual lever detent spring in upper housing.

(3) Position detent ball on end of spring. Then hold detent ball and spring in detent housing with Retainer Tool 6583 (Fig. 329).

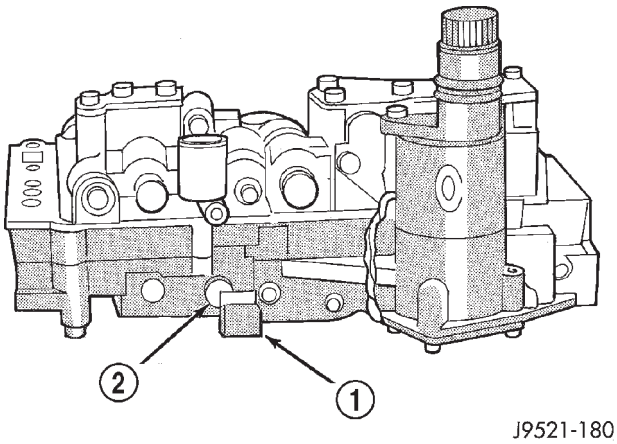

Fig. 328 Seating 3-4 Accumulator On Lower Housing

1 - ACCUMULATOR BOX
2 - CONVERTER CLUTCH VALVE PLUG

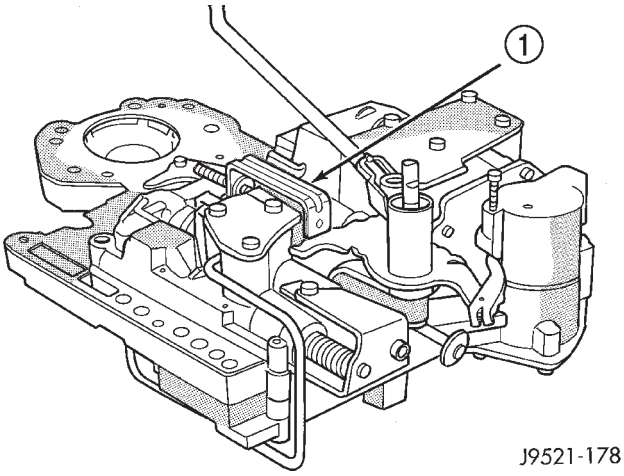

Fig. 329 Detent Ball Spring

1 - SPECIAL TOOL 6583 POSITIONED ON DETENT HOUSING

(4) Install throttle lever in upper housing. Then install manual lever over throttle lever and start manual lever into housing.

(5) Align manual lever with detent ball and manual valve. Hold throttle lever upward. Then press down on manual lever until fully seated. Remove detent ball retainer tool after lever is seated.

(6) Then install manual lever seal, washer and E-clip.

(7) Verify that throttle lever is aligned with end of kickdown valve stem and that manual lever arm is engaged in manual valve (Fig. 330).

(8) Position line pressure adjusting screw in adjusting screw bracket.

(9) Install spring on end of line pressure regulator valve.

VALVE BODY (Continued)

(10) Install switch valve spring on tang at end of adjusting screw bracket.

(11) Install manual valve.

(12) Install throttle valve and spring.

(13) Install kickdown valve and detent.

(14) Install pressure regulator valve.

(15) Install switch valve.

(16) Position adjusting screw bracket on valve body. Align valve springs and press bracket into place. Install short, upper bracket screws first and long bottom screw last. Verify that valve springs and bracket are properly aligned. Then tighten all three bracket screws to 4 N·m (35 in. lbs.) torque.

(17) Perform Line Pressure and Throttle Pressure adjustments. (Refer to 21 - TRANSMISSION/TRANSAXLE/AUTOMATIC/VALVE BODY - ADJUSTMENTS)

(18) Lubricate solenoid case connector O-rings and shaft of manual lever with light coat of petroleum jelly.

(19) Attach solenoid case connector to 3-4 accumulator with shoulder-type screw. Connector has small locating tang that fits in dimple at top of accumulator housing (Fig. 331). Seat tang in dimple before tightening connector screw.

(20) Install solenoid assembly and gasket. Tighten solenoid attaching screws to 8 N·m (72 in. lbs.) torque.

(21) Verify that solenoid wire harness is properly routed (Fig. 332). Solenoid harness must be clear of manual lever and park rod and not be pinched between accumulator housing and cover.

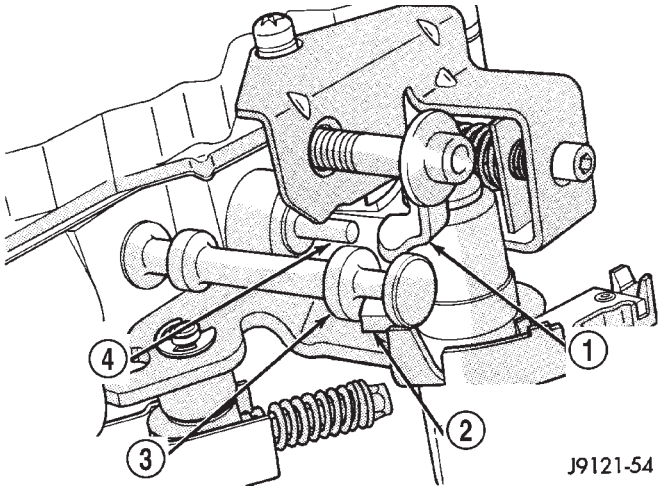

Fig. 330 Manual And Throttle Lever Alignment

1 - THROTTLE LEVER
2 - MANUAL LEVER VALVE ARM
3 - MANUAL VALVE
4 - KICKDOWN VALVE

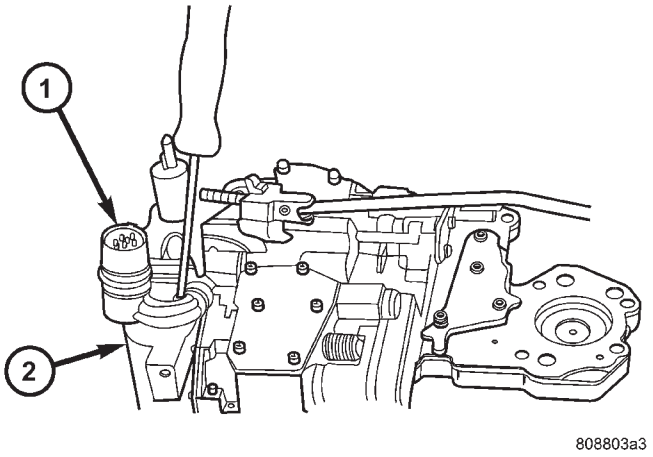

Fig. 331 Solenoid Harness Case Connector Shoulder Bolt

1 - SOLENOID HARNESS CASE CONNECTOR
2 - 3-4 ACCUMULATOR HOUSING

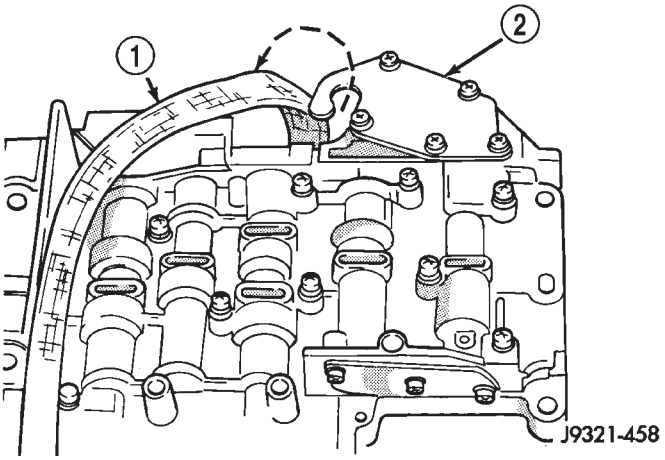

Fig. 332 Solenoid Harness Routing

1 - OVERDRIVE/CONVERTER SOLENOID WIRE HARNESS
2 - 3-4 ACCUMULATOR COVER PLATE

GOVERNOR BODY, SENSOR AND SOLENOID

(1) Turn valve body assembly over so accumulator side of transfer plate is facing down.

(2) Install new O-rings on governor pressure solenoid and sensor.

(3) Lubricate solenoid and sensor O-rings with clean transmission fluid.

(4) Install governor pressure sensor in governor body.

(5) Install governor pressure solenoid in governor body. Push solenoid in until it snaps into place in body.

(6) Position governor body gasket on transfer plate.

VALVE BODY (Continued)

(7) Install retainer plate on governor body and around solenoid. Be sure solenoid connector is positioned in retainer cutout.

(8) Align screw holes in governor body and transfer plate. Then install and tighten governor body screws to 4 N·m (35 in. lbs.) torque.

(9) Connect harness wires to governor pressure solenoid and governor pressure sensor.

(10) Install fluid filter and pan.

(11) Lower vehicle.

(12) Fill transmission with recommended fluid and road test vehicle to verify repair.

INSTALLATION

(1) Check condition of O-ring seals on valve body harness connector (Fig. 333). Replace seals on connector body if cut or worn.

(2) Check condition of manual lever shaft seal in transmission case. Replace seal if lip is cut or worn. Install new seal with 15/16 deep well socket (Fig. 334).

(3) Check condition of seals on accumulator piston (Fig. 335). Install new piston seals, if necessary.

(4) Place valve body manual lever in low (1 position) so ball on park lock rod will be easier to install in sprag.

(5) Lubricate shaft of manual lever with petroleum jelly. This will ease inserting shaft through seal in case.

(6) Lubricate seal rings on valve body harness connector with petroleum jelly.

(7) Position valve body in case and work end of park lock rod into and through pawl sprag. Turn propeller shaft to align sprag and park lock teeth if necessary. The rod will click as it enters pawl. Move rod to check engagement.

CAUTION: It is possible for the park rod to displace into a cavity just above the pawl sprag during installation. Make sure the rod is actually engaged in the pawl and has not displaced into this cavity.

(8) Install accumulator springs and piston into case. Then swing valve body over piston and outer spring to hold it in place.

(9) Align accumulator piston and outer spring, manual lever shaft and electrical connector in case.

(10) Then seat valve body in case and install one or two bolts to hold valve body in place.

(11) Tighten valve body bolts alternately and evenly to 11 N·m (100 in. lbs.) torque.

(12) Install new fluid filter on valve body. Tighten filter screws to 4 N·m (35 in. lbs.) torque.

(13) Install throttle and gearshift levers on valve body manual lever shaft.

(14) Check and adjust front and rear bands if necessary.

(15) Connect solenoid case connector wires.

(16) Install oil pan and new gasket. Tighten pan bolts to 17 N·m (13 ft. lbs.) torque.

(17) Lower vehicle and fill transmission with Mopar® ATF +4, type 9602, fluid.

(18) Check and adjust gearshift and throttle valve cables, if necessary.

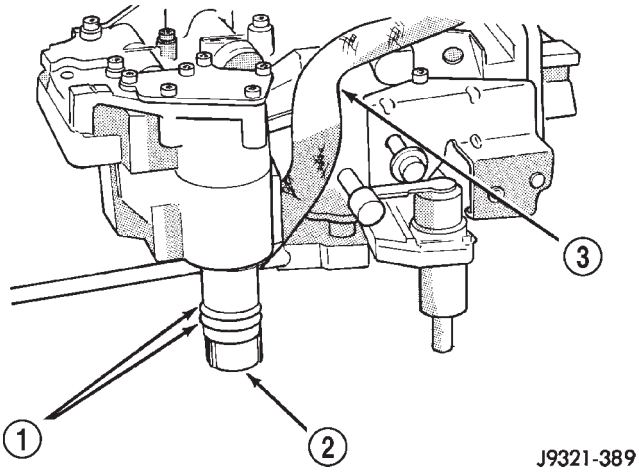

Fig. 333 Valve Body Harness Connector O-Ring Seal

1 - CONNECTOR O-RINGS
2 - VALVE BODY HARNESS CONNECTOR
3 - HARNESS

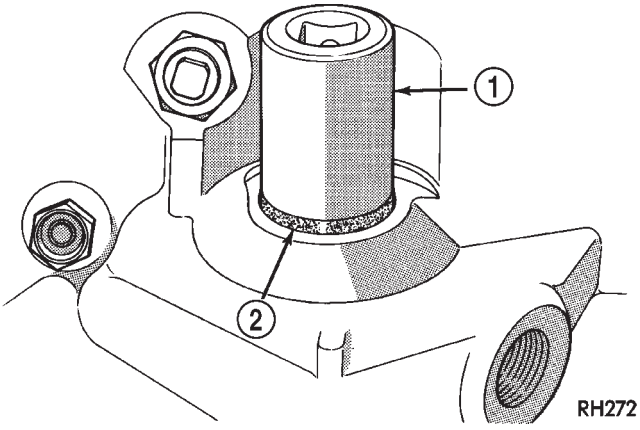

Fig. 334 Manual Lever Shaft Seal

1 - 15/16′′ SOCKET
2 - SEAL

ADJUSTMENTS - VALVE BODY

CONTROL PRESSURE ADJUSTMENTS

There are two control pressure adjustments on the valve body;

- Line Pressure
- Throttle Pressure

Line and throttle pressures are interdependent because each affects shift quality and timing. As a

VALVE BODY (Continued)

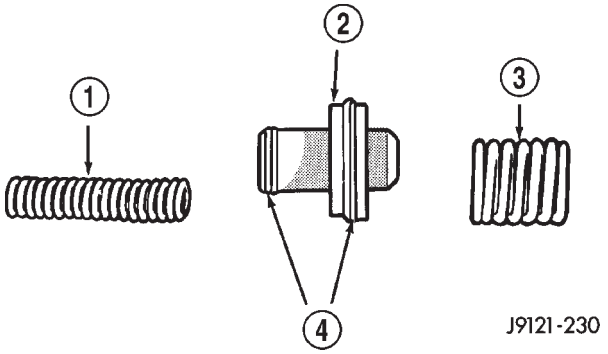

Fig. 335 Accumulator Piston Components

1 - INNER SPRING
2 - ACCUMULATOR PISTON
3 - OUTER SPRING
4 - SEAL RINGS

result, both adjustments must be performed properly and in the correct sequence. Adjust line pressure first and throttle pressure last.

LINE PRESSURE ADJUSTMENT

Measure distance from the valve body to the inner edge of the adjusting screw with an accurate steel scale (Fig. 336).

Distance should be 33.4 mm (1-5/16 in.).

If adjustment is required, turn the adjusting screw in, or out, to obtain required distance setting.

NOTE: The 33.4 mm (1-5/16 in.) setting is an approximate setting. Manufacturing tolerances may make it necessary to vary from this dimension to obtain desired pressure.

One complete turn of the adjusting screw changes line pressure approximately 1-2/3 psi (9 kPa).

Turning the adjusting screw counterclockwise increases pressure while turning the screw clockwise decreases pressure.

THROTTLE PRESSURE ADJUSTMENT

Insert Gauge Tool C-3763 between the throttle lever cam and the kickdown valve stem (Fig. 337).

Push the gauge tool inward to compress the kickdown valve against the spring and bottom the throttle valve.

Maintain pressure against kickdown valve spring. Turn throttle lever stop screw until the screw head

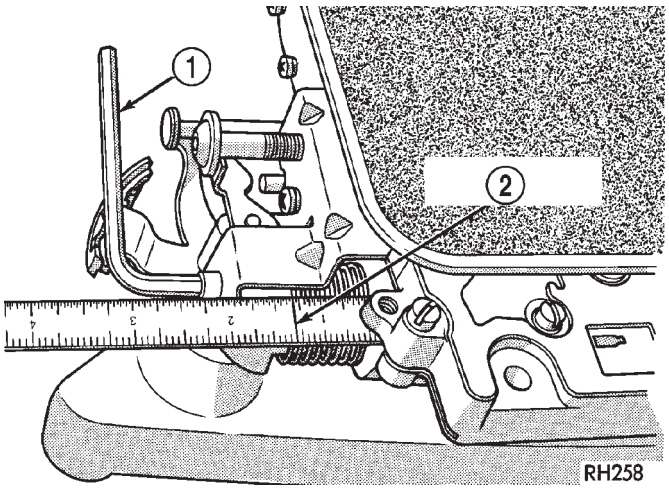

Fig. 336 Line Pressure Adjustment

1 - WRENCH
2 - 1–5/16 INCH

touches throttle lever tang and the throttle lever cam touches gauge tool.

NOTE: The kickdown valve spring must be fully compressed and the kickdown valve completely bottomed to obtain correct adjustment.

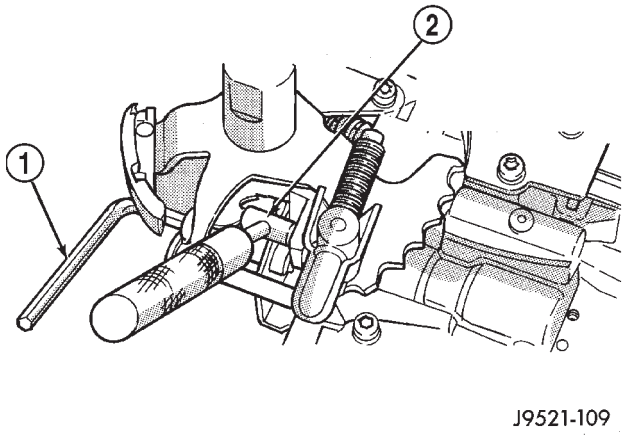

Fig. 337 Throttle Pressure Adjustment

1 - HEX WRENCH (IN THROTTLE LEVER ADJUSTING SCREW)
2 - SPECIAL TOOL C-3763 (POSITIONED BETWEEN THROTTLE LEVER AND KICKDOWN VALVE)

AUTOMATIC TRANSMISSION - 545RFE

TABLE OF CONTENTS

page

AUTOMATIC TRANSMISSION - 545RFE
DESCRIPTION 242
OPERATION. 243
DIAGNOSIS AND TESTING 243
AUTOMATIC TRANSMISSION. 243
PRELIMINARY DIAGNOSIS 244
ROAD TESTING 244
HYDRAULIC PRESSURE TEST 245
AIR CHECKING TRANSMISSION CLUTCH OPERATION 246
CONVERTER HOUSING FLUID LEAK 246
STANDARD PROCEDURE 247
ALUMINUM THREAD REPAIR. 247
REMOVAL 247
DISASSEMBLY. 248
CLEANING 253
INSPECTION 254
ASSEMBLY 254
INSTALLATION. 261
SCHEMATICS AND DIAGRAMS 262
SPECIFICATIONS. 283
SPECIAL TOOLS 284
4C RETAINER/BULKHEAD
DISASSEMBLY. 287
ASSEMBLY 287
ADAPTER HOUSING SEAL
REMOVAL 288
INSTALLATION. 288
BRAKE TRANSMISSION SHIFT INTERLOCK MECHANISM
DESCRIPTION 289
OPERATION. 289
DIAGNOSIS AND TESTING 290
BRAKE TRANSMISSION SHIFT INTERLOCK . 290
REMOVAL 290
INSTALLATION. 291
ADJUSTMENTS 291
FLUID AND FILTER
DIAGNOSIS AND TESTING 292
EFFECTS OF INCORRECT FLUID LEVEL . . . 292
CAUSES OF BURNT FLUID 292
FLUID CONTAMINATION 293
STANDARD PROCEDURE 294
FLUID LEVEL CHECK. 294
FLUID AND FILTER REPLACEMENT 295
TRANSMISSION FILL 295
GEARSHIFT CABLE
DIAGNOSIS AND TESTING 296
GEARSHIFT CABLE 296
REMOVAL 296
INSTALLATION. 296
ADJUSTMENTS 297
HOLDING CLUTCHES
DESCRIPTION 298
OPERATION. 298
INPUT CLUTCH ASSEMBLY
DESCRIPTION 300
OPERATION. 300
DISASSEMBLY. 302
ASSEMBLY 303
INPUT SPEED SENSOR
DESCRIPTION 309
OPERATION. 309
REMOVAL 309
INSTALLATION. 309
LINE PRESSURE (LP) SENSOR
DESCRIPTION 310
OPERATION. 310
REMOVAL 310
INSTALLATION. 310
LOW/REVERSE CLUTCH
DISASSEMBLY 311
CLEANING 312
INSPECTION 312
ASSEMBLY 312
OIL PUMP
DESCRIPTION 313
OPERATION. 315
STANDARD PROCEDURE 315
OIL PUMP VOLUME CHECK. 315
DISASSEMBLY. 315
CLEANING 315
INSPECTION 315
ASSEMBLY 316
OIL PUMP FRONT SEAL
REMOVAL 318
INSTALLATION. 318
OUTPUT SPEED SENSOR
DESCRIPTION 319
OPERATION. 319
REMOVAL 319
INSTALLATION. 319
OVERDRIVE SWITCH
DESCRIPTION 319
OPERATION. 319
PISTONS
DESCRIPTION 319
OPERATION. 320

PLANETARY GEARTRAIN
DESCRIPTION 322
OPERATION. 322
DISASSEMBLY. 323
CLEANING 323
INSPECTION 323
ASSEMBLY 323
SHIFT MECHANISM
DESCRIPTION 324
OPERATION. 324
REMOVAL 325
INSTALLATION. 326
SOLENOID SWITCH VALVE
DESCRIPTION 326
OPERATION. 326
SOLENOIDS
DESCRIPTION 327
OPERATION. 327
TORQUE CONVERTER
DESCRIPTION 327
OPERATION. 331
REMOVAL 332
INSTALLATION. 332
TRANSMISSION CONTROL RELAY
DESCRIPTION 333
OPERATION. 333
TRANSMISSION RANGE SENSOR
DESCRIPTION 333
OPERATION. 333
TRANSMISSION SOLENOID/TRS ASSEMBLY
DESCRIPTION 334
OPERATION. 334
REMOVAL 334
INSTALLATION. 335
TRANSMISSION TEMPERATURE SENSOR
DESCRIPTION 335
OPERATION. 335
VALVE BODY
DESCRIPTION 335
OPERATION. 335
REMOVAL 337
DISASSEMBLY. 337
CLEANING 338
INSPECTION 338
ASSEMBLY 340
INSTALLATION. 341

AUTOMATIC TRANSMISSION - 545RFE

DESCRIPTION

The 545RFE automatic transmission is a sophisticated, multi-range, electronically controlled transmission which combines optimized gear ratios for responsive performance, state of the art efficiency features and low NVH. Other features include driver adaptive shifting and three planetary gear sets to provide wide ratio capability with precise ratio steps for optimum driveability. The three planetary gear sets also make available a unique alternate second gear ratio. The primary 2nd gear ratio fits between 1st and 3rd gears for normal through-gear accelerations. The alternate second gear ratio (2prime) allows smoother 4-2 kickdowns at high speeds to provide 2nd gear passing performance over a wider highway cruising range. An additional overdrive ratio (0.67:1) is also provided for greater fuel economy and less NVH at highway speeds.

The hydraulic portion of the transmission consists of the transmission fluid, fluid passages, hydraulic valves, and various line pressure control components.

The primary mechanical components of the transmission consist of the following:

- Three multiple disc input clutches
- Three multiple disc holding clutches
- Five hydraulic accumulators
- Three planetary gear sets
- Dual Stage Hydraulic oil pump
- Valve body
- Solenoid pack

The TCM is the “heart” or “brain” of the electronic control system and relies on information from various direct and indirect inputs (sensors, switches, etc.) to determine driver demand and vehicle operating conditions. With this information, the TCM can calculate and perform timely and quality shifts through various output or control devices (solenoid pack, transmission control relay, etc.).

AUTOMATIC TRANSMISSION - 545RFE (Continued)

TRANSMISSION IDENTIFICATION

Transmission identification numbers are stamped on the left side of the case just above the oil pan sealing surface (Fig. 1). Refer to this information when ordering replacement parts. A label is attached to the transmission case above the stamped numbers. The label gives additional information which may also be necessary for identification purposes.

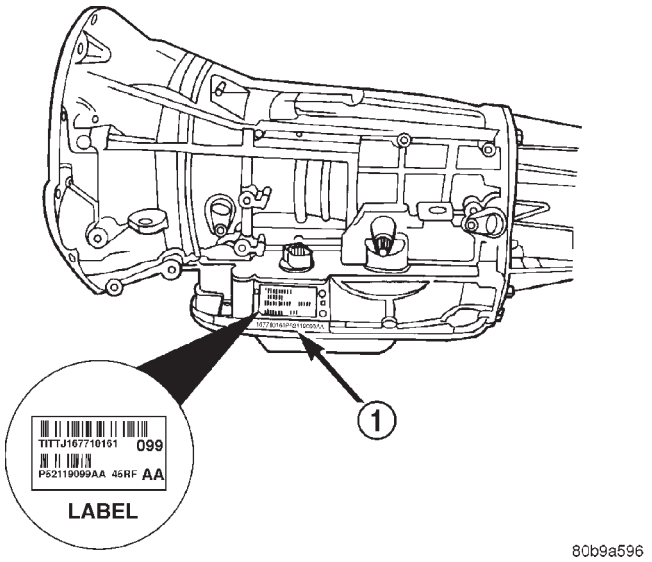

Fig. 1 Transmission Part And Serial Number Location

1 - IDENTIFICATION NUMBERS (STAMPED)

GEAR RATIOS The 545RFE gear ratios are:

1st	3.00:1
2nd	1.67:1
2nd Prime	1.50:1
3rd	1.00:1
4th	0.75:1
5th	0.67:1
Reverse	3.00:1

OPERATION

The 545RFE offers full electronic control of all automatic up and downshifts, and features real-time adaptive closed-loop shift and pressure control. Electronic shift and torque converter clutch controls help protect the transmission from damage due to high temperatures, which can occur under severe operating conditions. By altering shift schedules, line pressure, and converter clutch control, these controls reduce heat generation and increase transmission cooling.

To help reduce efficiency-robbing parasitic losses, the transmission includes a dual-stage transmission fluid pump with electronic output pressure control. Under most driving conditions, pump output pressure greatly exceeds that which is needed to keep the clutches applied. The 545RFE pump-pressure control system monitors input torque and adjusts the pump pressure accordingly. The primary stage of the pump works continuously; the second stage is bypassed when demand is low. The control system also monitors input and output speed and, if incipient clutch slip is observed, the pressure control solenoid duty cycle is varied, increasing pressure in proportion to demand.

A high-travel torque converter damper assembly allows earlier torque converter clutch engagement to reduce slippage. Needle-type thrust bearings reduce internal friction. The 545RFE is packaged in a one-piece die-cast aluminum case. To reduce NVH, the case has high lateral, vertical and torsional stiffness. It is also designed to maximize the benefit of the structural dust cover that connects the bottom of the bell housing to the engine bedplate, enhancing overall power train stiffness. Dual filters protect the pump and other components. A pump return filter is added to the customary main sump filter. Independent lubrication and cooler circuits assure ample pressure for normal transmission operation even if the cooler is obstructed or the fluid cannot flow due to extremely low temperatures.

The hydraulic control system design (without electronic assist) provides the transmission with PARK, REVERSE, NEUTRAL, SECOND, and THIRD gears, based solely on driver shift lever selection. This design allows the vehicle to be driven (in “limp-in” mode) in the event of a electronic control system failure, or a situation that the Transmission Control Module (TCM) recognizes as potentially damaging to the transmission.

The TCM also performs certain self-diagnostic functions and provides comprehensive information (sensor data, DTC’s, etc.) which is helpful in proper diagnosis and repair. This information can be viewed with the DRB scan tool.

DIAGNOSIS AND TESTING - AUTOMATIC TRANSMISSION

CAUTION: Before attempting any repair on a 545RFE automatic transmission, check for Diagnostic Trouble Codes with the DRB® scan tool.

Transmission malfunctions may be caused by these general conditions:

- Poor engine performance
- Improper adjustments
- Hydraulic malfunctions
- Mechanical malfunctions
- Electronic malfunctions

Diagnosis of these problems should always begin by checking the easily accessible variables: fluid level and condition, gearshift cable adjustment. Then perform a road test to determine if the problem has been corrected or if more diagnosis is necessary. If the

problem persists after the preliminary tests and corrections are completed, hydraulic pressure checks should be performed.

DIAGNOSIS AND TESTING - PRELIMINARY DIAGNOSIS

Two basic procedures are required. One procedure for vehicles that are drivable and an alternate procedure for disabled vehicles (will not back up or move forward).

VEHICLE IS DRIVABLE

(1) Check for transmission fault codes using DRB® scan tool.

(2) Check fluid level and condition.

(3) Adjust gearshift cable if complaint was based on delayed, erratic, or harsh shifts.

(4) Road test and note how transmission upshifts, downshifts, and engages.

(5) Perform stall test if complaint is based on sluggish acceleration. Or, if abnormal throttle opening is needed to maintain normal speeds with a properly tuned engine.

(6) Perform hydraulic pressure test if shift problems were noted during road test.

(7) Perform air-pressure test to check clutch operation.

VEHICLE IS DISABLED

(1) Check fluid level and condition.

(2) Check for broken or disconnected gearshift cable.

(3) Check for cracked, leaking cooler lines, or loose or missing pressure-port plugs.

(4) Raise and support vehicle on safety stands, start engine, shift transmission into gear, and note following:

(a) If propeller shaft turns but wheels do not, problem is with differential or axle shafts.

(b) If propeller shaft does not turn and transmission is noisy, stop engine. Remove oil pan, and check for debris. If pan is clear, remove transmission and check for damaged driveplate, converter, oil pump, or input shaft.

(c) If propeller shaft does not turn and transmission is not noisy, perform hydraulic-pressure test to determine if problem is hydraulic or mechanical.

DIAGNOSIS AND TESTING - ROAD TESTING

Before road testing, be sure the fluid level and control cable adjustments have been checked and adjusted if necessary. Verify that all diagnostic trouble codes have been resolved.

Observe engine performance during the road test. A poorly tuned engine will not allow accurate analysis of transmission operation.

Operate the transmission in all gear ranges. Check for shift variations and engine flare which indicates slippage. Note if shifts are harsh, spongy, delayed, early, or if part throttle downshifts are sensitive.

Slippage indicated by engine flare, usually means clutch, overrunning clutch, or line presure problems.

A slipping clutch can often be determined by comparing which internal units are applied in the various gear ranges. The Clutch Application chart provides a basis for analyzing road test results.

CLUTCH APPLICATION CHART

SLP	UD	OD	R	2C	4C	L/R	OVERRUNNING
P–PARK						ON	
R–REVERSE			ON			ON	
N-NEUTRAL						ON	
D–OVERDRIVE FIRST	ON					ON*	ON
SECOND	ON			ON			
SECOND PRIME	ON				ON		
THIRD	ON	ON					
FOURTH		ON			ON		
FIFTH		ON		ON			
LIMP-IN	ON	ON					
2–FIRST	ON					ON*	ON
SECOND	ON			ON			
LIMP-IN	ON			ON			
1–LOW	ON					ON	ON

*L/R clutch is on only with the output shaft speed below 150 rpm.

AUTOMATIC TRANSMISSION - 545RFE (Continued)

DIAGNOSIS AND TESTING - HYDRAULIC PRESSURE TEST

An accurate tachometer and pressure test gauges are required. Test Gauge C-3293-SP has a 300 psi range and is used at all locations where pressures exceed 100 psi.

Pressure Test Port Locations

Only two pressure ports are supplied on the transmission case. The torque converter clutch apply and release ports are located on the right side of the transmission case (Fig. 2).

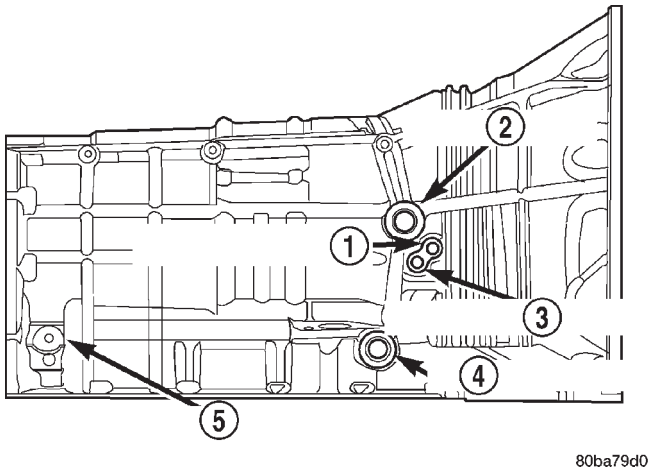

Fig. 2 Torque Converter Pressure Locations

1 - TCC RELEASE
2 - TO COOLER
3 - TCC APPLY
4 - FROM COOLER
5 - LINE PRESSURE SENSOR

To determine the line pressure, there are two available methods. The DRB® scan tool can be used to read line pressure from the line pressure sensor. The second method is to install Line Pressure Adapter 8259 (Fig. 4) into the transmission case and then install the pressure gauge and the original sensor into the adapter. This will allow a comparison of the DRB® readings and the gauge reading to determe the accuracy of the line pressure sensor. The DRB® line pressure reading should match the gauge reading within ±10 psi.

In order to access any other pressure tap locations, the transmission oil pan must be removed, the pressure port plugs removed and Valve Body Pressure Tap Adapter 8258-A (Fig. 5) installed. The extensions supplied with Adapter 8258-A will allow the installation of pressure gauges to the valve body. Refer to (Fig. 3) for correct pressure tap location identification.

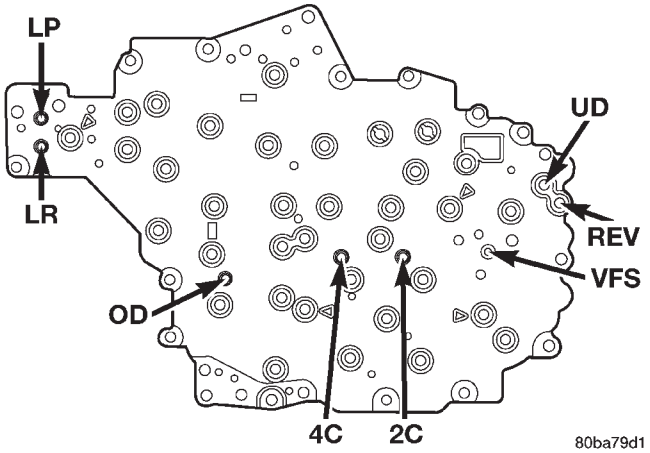

Fig. 3 Pressure Tap Locations

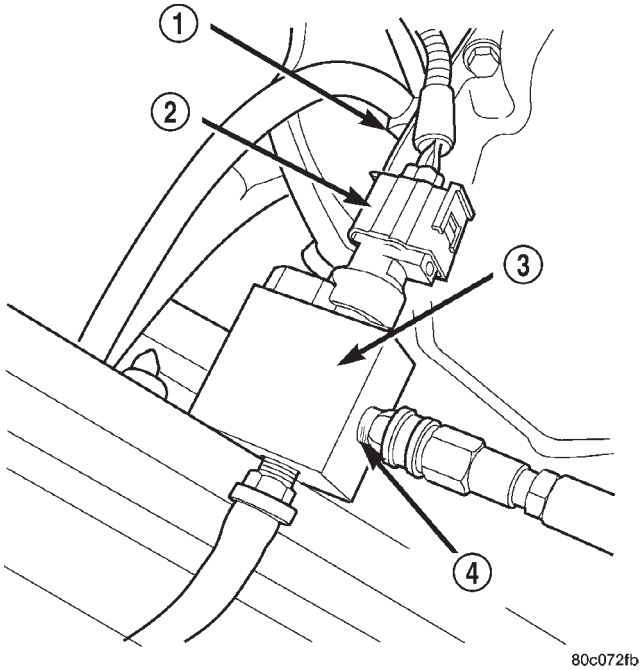

Fig. 4 Line Pressure Adapter 8259

1 - LINE PRESSURE SENSOR PORT
2 - LINE PRESSURE SENSOR
3 - TOOL 8259
4 - PRESSURE TAP

TEST PROCEDURE

All pressure readings should be taken with the transmission fluid level full, transmission oil at the normal operating temperature, and the engine at 1500 rpm. Check the transmission for proper operation in each gear position that is in question or if a specific element is in question, check the pressure readings in at least two gear positions that employ that element. Refer to the Hydraulic Schematics at the rear of this section to determine the correct pressures for each element in a given gear position.

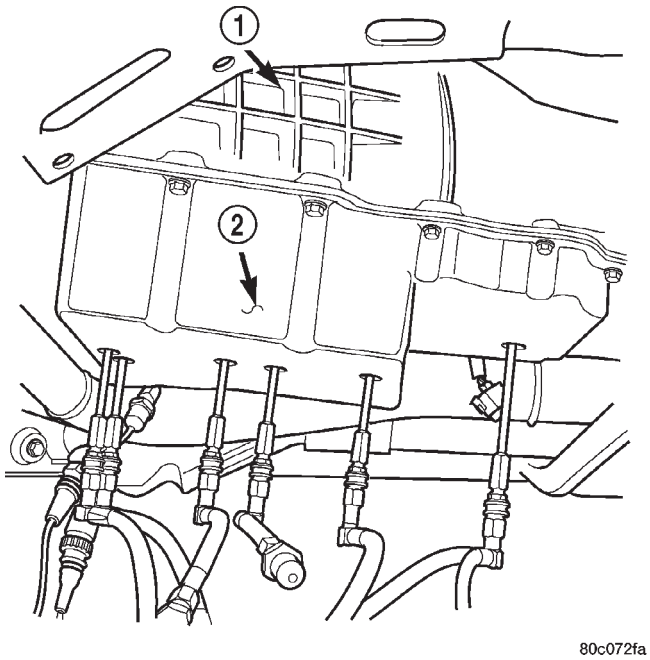

Fig. 5 Valve Body Pressure Tap Adapter 8258-A

1 - 545RFE TRANSMISSION
2 - TOOL 8258-A

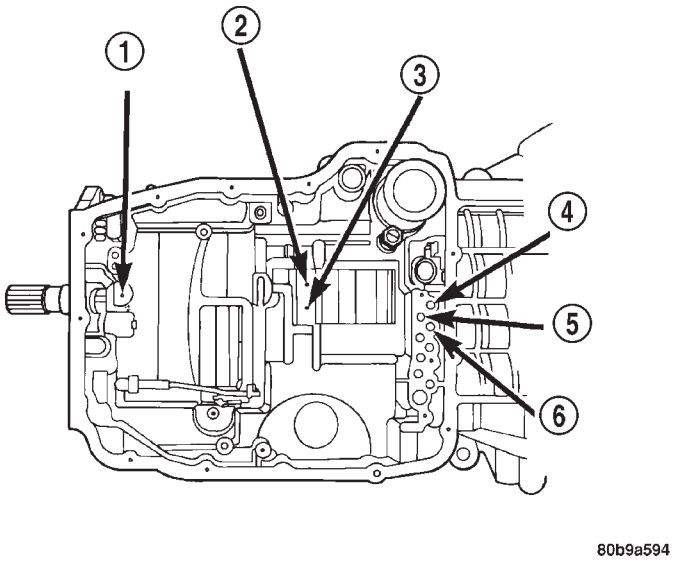

Fig. 6 Air Pressure Test Passages

1 - LOW REVERSE CLUTCH
2 - 4TH CLUTCH
3 - 2ND CLUTCH
4 - OVERDRIVE CLUTCH
5 - UNDERDRIVE CLUTCH
6 - REVERSE CLUTCH

NOTE: The 545RFE utilizes closed loop control of pump line pressure. The pressure readings may therefore vary greatly but should always follow line pressure.

Some common pressures that can be measured to evaluate pump and clutch performance are the upshift/downshift pressures and the garage shift pressures. The upshift/downshift pressure for all shifts except the 4-5 shift is 120 psi. The upshift pressure for the 4-5 shift is 130 psi. The garage shift pressure when performing a N-R shift is 220 psi. The garage shift pressure for the R-N and N-1 shifts is 120 psi.

DIAGNOSIS AND TESTING - AIR CHECKING TRANSMISSION CLUTCH OPERATION

Air-pressure testing can be used to check transmission clutch operation. The test can be conducted with the transmission either in the vehicle or on the work bench, as a final check.

Air-pressure testing requires that the oil pan and valve body be removed from the transmission. The clutch apply passages are shown (Fig. 6).

NOTE: The air supply which is used must be free of moisture and dirt. Use a pressure of 30 psi to test clutch operation.

Apply air pressure at each port. If the clutch is functioning, a soft thump will be heard as the clutch is applied. The clutch application can also be felt by touching the appropriate element while applying air pressure. As the air pressure is released, the clutch should also release.

DIAGNOSIS AND TESTING - CONVERTER HOUSING FLUID LEAK

When diagnosing converter housing fluid leaks, two items must be established before repair.

(1) Verify that a leak condition actually exists.
(2) Determined the true source of the leak.

Some suspected converter housing fluid leaks may not be leaks at all. They may only be the result of residual fluid in the converter housing, or excess fluid spilled during factory fill or fill after repair. Converter housing leaks have several potential sources. Through careful observation, a leak source can be identified before removing the transmission for repair. Torque converter seal leaks tend to move along the drive hub and onto the rear of the converter. Pump cover seal tend to run down the cover and the inside surface of the bellhousing.

Some leaks, or suspected leaks, may be particularly difficult to locate. If necessary, a Mopar® approved dye may be used to locate a leak.

AUTOMATIC TRANSMISSION - 545RFE (Continued)

TORQUE CONVERTER LEAK POINTS

Possible sources of converter leaks are:

(1) Leaks at the weld joint around the outside diameter weld (Fig. 7).

(2) Leaks at the converter hub weld (Fig. 7).

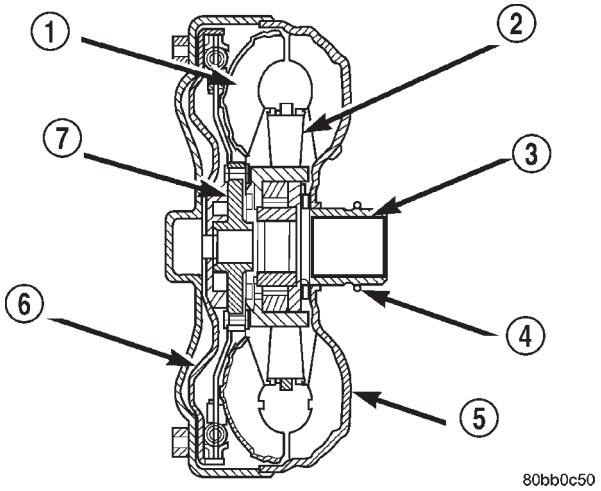

Fig. 7 Torque Converter Assembly

1 - TURBINE ASSEMBLY
2 - STATOR
3 - CONVERTER HUB
4 - O-RING
5 - IMPELLER ASSEMBLY
6 - CONVERTER CLUTCH PISTON
7 - TURBINE HUB

STANDARD PROCEDURE - ALUMINUM THREAD REPAIR

Damaged or worn threads in the aluminum transmission case and valve body can be repaired by the use of Heli-Coils™, or equivalent. This repair consists of drilling out the worn-out damaged threads. Then tap the hole with a special Heli-Coil™ tap, or equivalent, and installing a Heli-Coil™ insert, or equivalent, into the hole. This brings the hole back to its original thread size.

Heli-Coil™, or equivalent, tools and inserts are readily available from most automotive parts suppliers.

REMOVAL

CAUTION: The transmission and torque converter must be removed as an assembly to avoid component damage. The converter driveplate, converter hub o-ring, or oil seal can be damaged if the converter is left attached to the driveplate during removal. Be sure to remove the transmission and converter as an assembly.

(1) Disconnect the negative battery cable.

(2) Raise and support the vehicle

(3) Mark propeller shaft and axle yokes for assembly alignment.

(4) Remove the rear propeller shaft

(5) Remove the front propeller shaft.

(6) Remove the engine to transmission collar (Fig. 8).

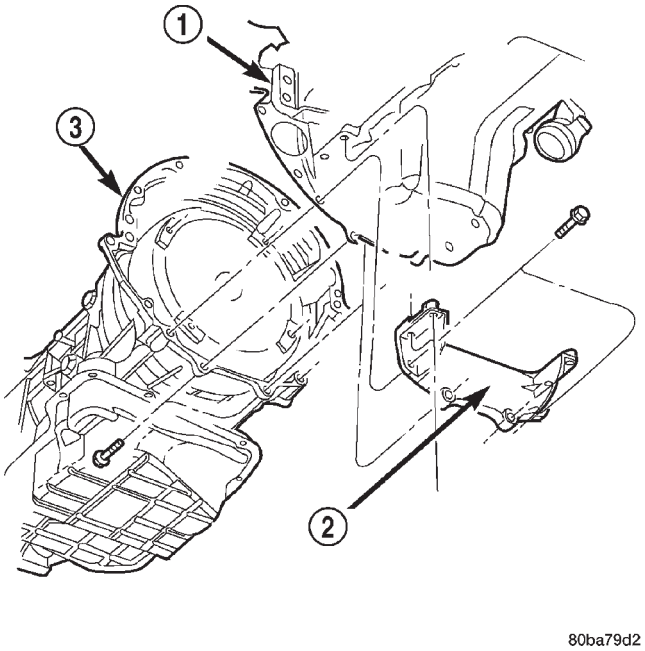

Fig. 8 Transmission Collar

1 - ENGINE
2 - ENGINE TO TRANSMISSION COLLAR
3 - TRANSMISSION

(7) Remove the exhaust support bracket from the rear of the transmission.

(8) Disconnect and lower or remove any necessary exhaust components.

(9) Remove the starter motor.

(10) Rotate crankshaft in clockwise direction until converter bolts are accessible. Then remove bolts one at a time. Rotate crankshaft with socket wrench on dampener bolt.

(11) Disconnect wires from solenoid and pressure switch assembly, input and output speed sensors, and line pressure sensor.

(12) Disconnect gearshift cable from transmission manual valve lever (Fig. 9).

(13) Disconnect transfer case shift cable from the transfer case shift lever (Fig. 10).

(14) Remove the clip securing the transfer case shift cable into the cable support bracket.

(15) Disconnect transmission fluid cooler lines at transmission fittings and clips.

(16) Disconnect the transmission vent hose from the transmission.

AUTOMATIC TRANSMISSION - 545RFE (Continued)

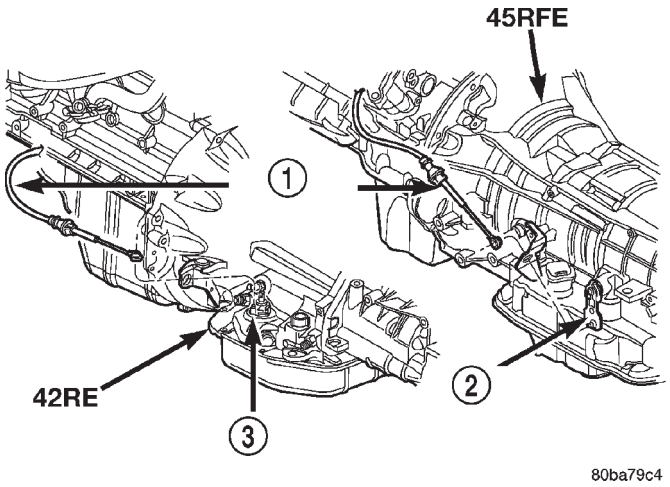

Fig. 9 Transmission Shift Cable

1 - SHIFT CABLE
2 - MANUAL LEVER
3 - MANUAL LEVER

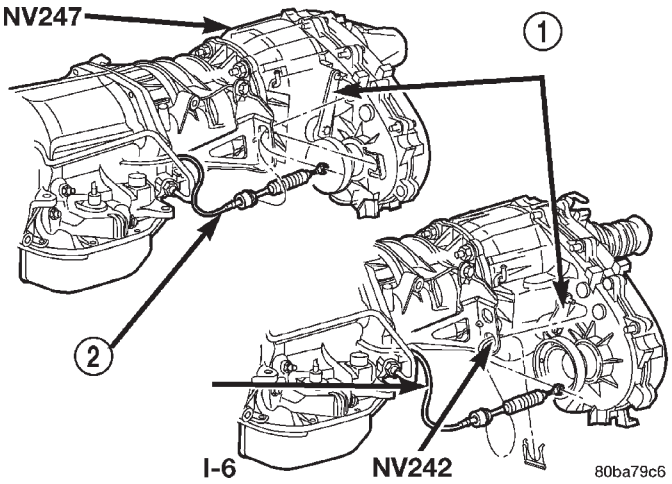

Fig. 10 Transfer Case Shift Cable

1 - TRANSFER CASE SHIFT LEVER
2 - TRANSFER CASE SHIFT CABLE

(17) Support rear of engine with safety stand or jack.

(18) Raise transmission slightly with service jack to relieve load on crossmember and supports.

(19) Remove bolts securing rear support and cushion to transmission and crossmember (Fig. 11).

(20) Remove bolts attaching crossmember to frame and remove crossmember.

(21) Remove transfer case (Fig. 12) and (Fig. 13).

(22) Remove all remaining converter housing bolts.

(23) Carefully work transmission and torque converter assembly rearward off engine block dowels.

(24) Hold torque converter in place during transmission removal.

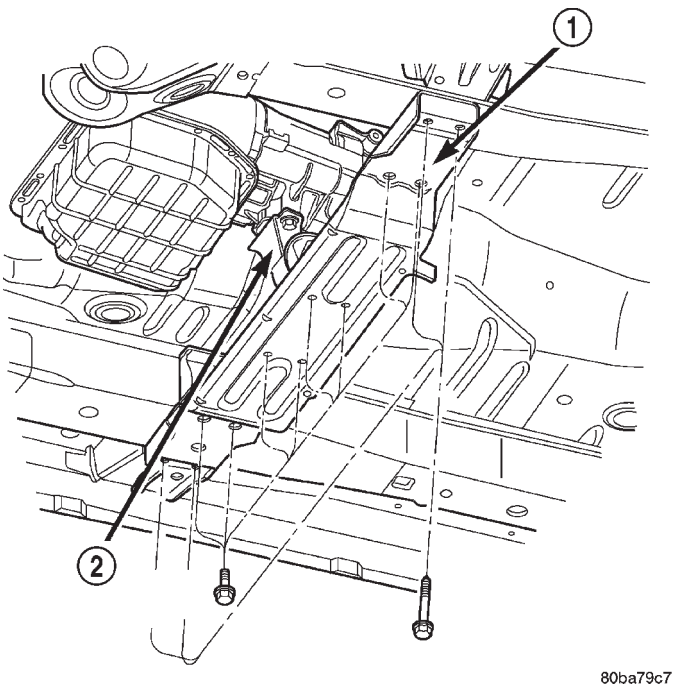

Fig. 11 Rear Transmission Crossmember

1 - CROSSMEMBER
2 - REAR TRANSMISSION MOUNT

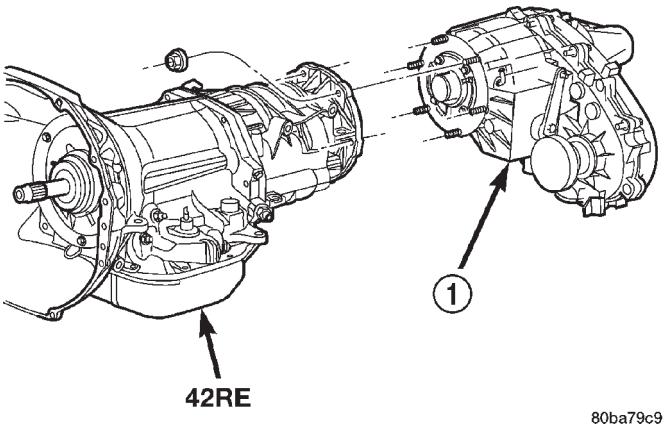

Fig. 12 Remove NV247 Transfer Case

1 - NV247 TRANSFER CASE

(25) Lower transmission and remove assembly from under the vehicle.

(26) To remove torque converter, carefully slide torque converter out of the transmission.

DISASSEMBLY

(1) Drain fluid from transmission.

(2) Clean exterior of transmission with suitable solvent or pressure washer.

(3) Remove the torque converter from the transmission.

AUTOMATIC TRANSMISSION - 545RFE (Continued)

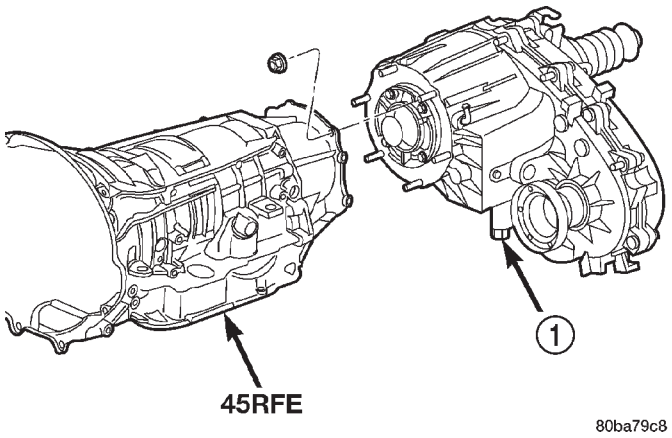

Fig. 13 Remove NV242 Transfer Case

1 - NV242 TRANSFER CASE

(4) Remove the manual shift lever from the transmission.

(5) Remove the input, output, and line pressure sensors from the transmission case (Fig. 14).

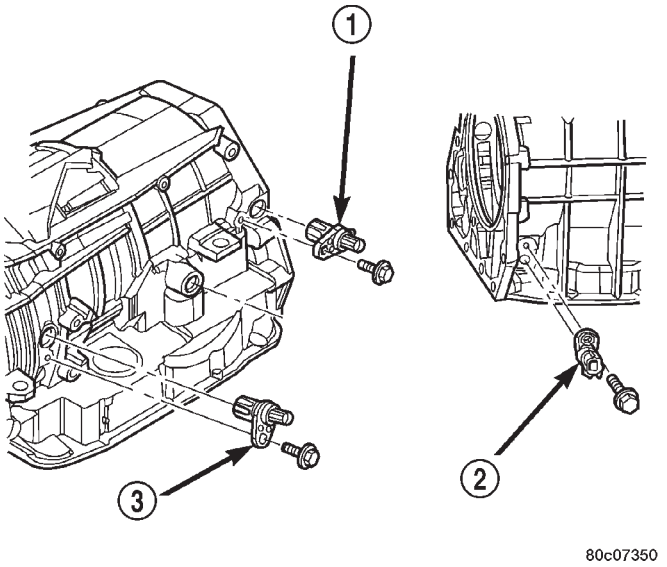

Fig. 14 Remove Input, Output, and Line Pressure Sensors

1 - OUTPUT SPEED SENSOR
2 - LINE PRESSURE SENSOR
3 - INPUT SPEED SENSOR

(6) Inspect the ends of the sensors for debris, which may indicate the nature of the transmission failure.

(7) Install Support Stand 8257 onto the transmission case (Fig. 15).

(8) Using Adapter 8266-1 from End-Play Tool Set 8266 and Dial Indicator C-3339, measure and record the input shaft end-play (Fig. 16).

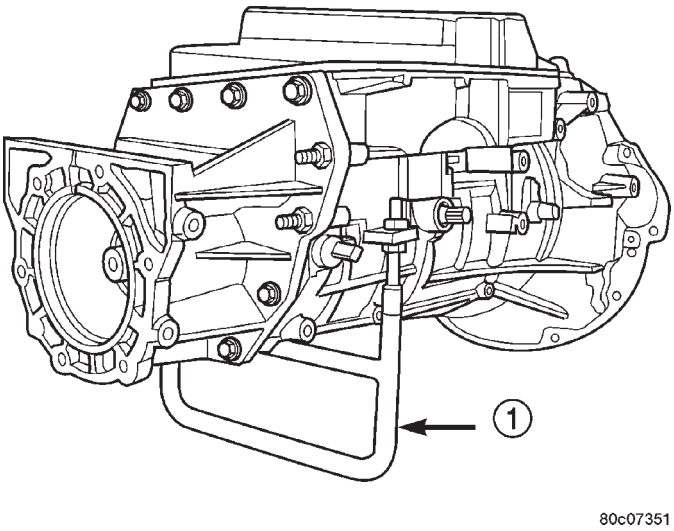

Fig. 15 Install Support Stand - Tool 8257

1 - TOOL 8257

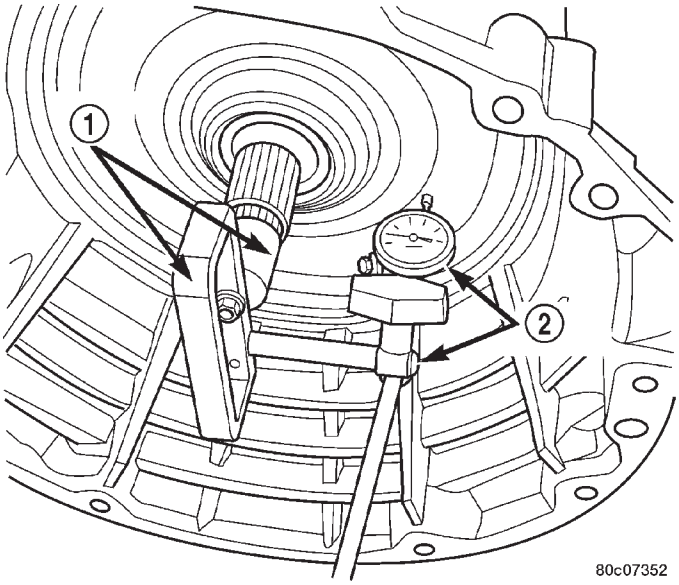

Fig. 16 Measure Input Shaft End Play

1 - TOOL 8266
2 - TOOL C-3339

NOTE: When measuring the input shaft end-play, two ″stops″ will be felt. When the input shaft is pushed inward and the dial indicator zeroed, the first ″stop″ felt when the input shaft is pulled outward is the movement of the input shaft in the input clutch housing hub. This value should not be included in the end-play measured value and therefore must be recorded and subtracted from the dial indicator reading.

(9) Remove the bolts holding the transmission extension/adapter housing to the transmission case.

AUTOMATIC TRANSMISSION - 545RFE (Continued)

(10) Remove the extension/adapter housing from the transmission case.

(11) Using Alignment Plate 8261, Adapter 8266-17 from End-Play Tool Set 8266 and Dial Indicator C-3339, measure and record the output shaft end-play (Fig. 17).

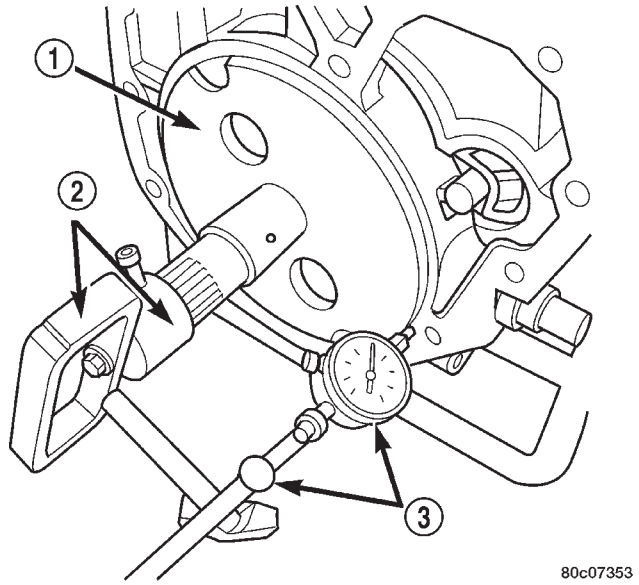

Fig. 17 Measure Output Shaft End Play

1 - TOOL 8261
2 - TOOL 8266
3 - TOOL C-3339

(12) Remove the bolts holding the transmission oil pan to the transmission case.

(13) Remove the transmission oil pan from the transmission case.

(14) Remove the primary oil filter and the oil cooler return filter (Fig. 18).

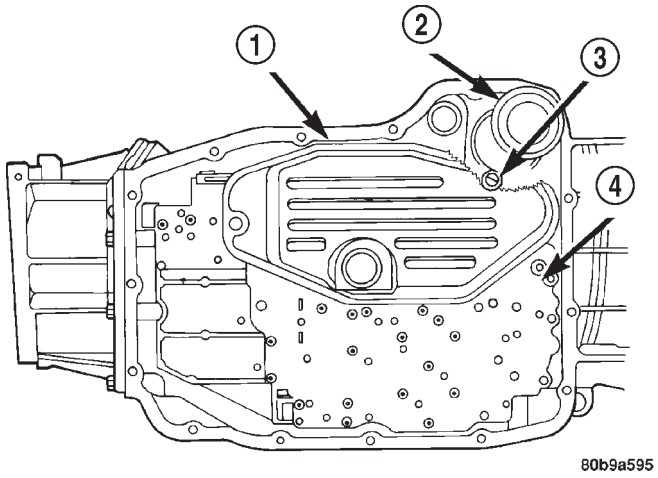

Fig. 18 Remove Primary Oil and Cooler Filters

1 - PRIMARY OIL FILTER
2 - COOLER RETURN FILTER
3 - FILTER BYPASS VALVE
4 - VALVE BODY

(15) Remove the cooler bypass valve.

(16) Remove the bolts holding the valve body to the transmission case (Fig. 19).

(17) Remove the valve body from the transmission case.

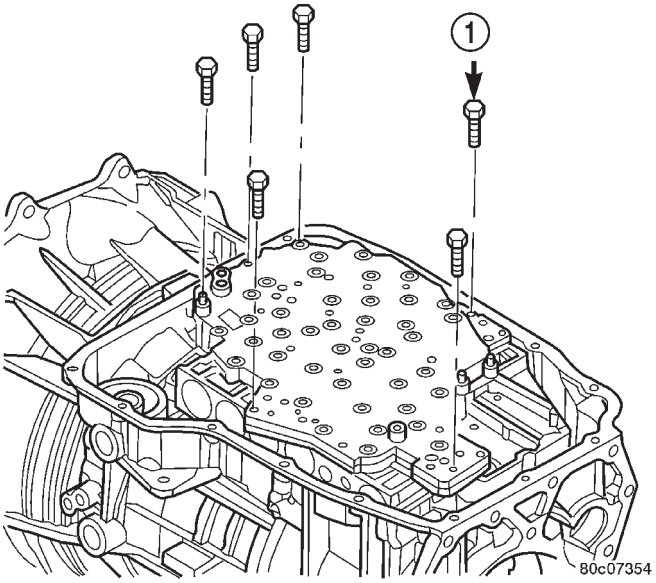

Fig. 19 Remove Valve Body Assembly

1 - VALVE BODY TO CASE BOLT (6)

(18) Remove the outer snap-ring securing the transmission front cover into the transmission case (Fig. 20).

(19) Remove the inner snap-ring securing the transmission front cover to the oil pump (Fig. 20).

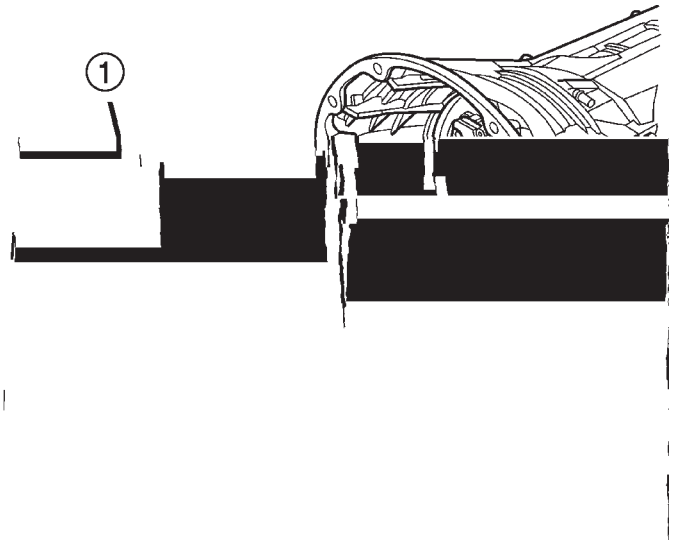

Fig. 20 Remove Transmission Front Cover

1 - INNER SNAP-RING
2 - TRANSMISSION COVER
3 - OUTER SNAP-RING

AUTOMATIC TRANSMISSION - 545RFE (Continued)

(38) Remove the park sprag gear from the output shaft (Fig. 27).

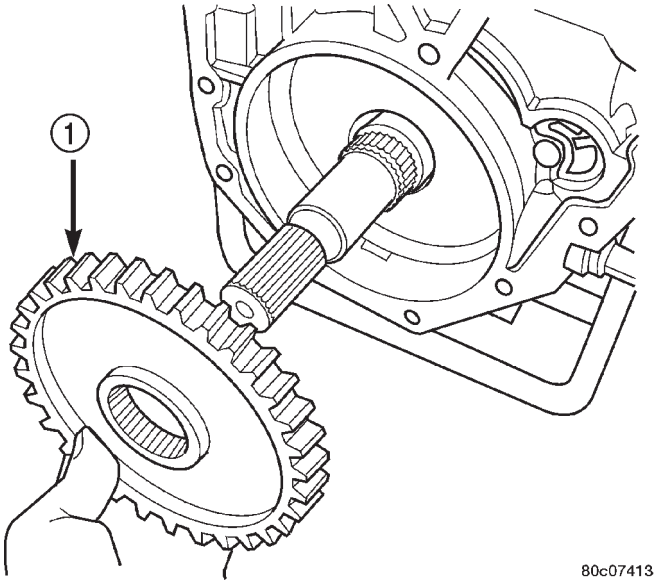

Fig. 27 Remove Park Sprag Gear

1 - PARK SPRAG GEAR

(39) Remove the input/reverse planetary assembly (Fig. 28).

(40) Remove the number 12 bearing from the input/reverse planetary assembly (Fig. 28).

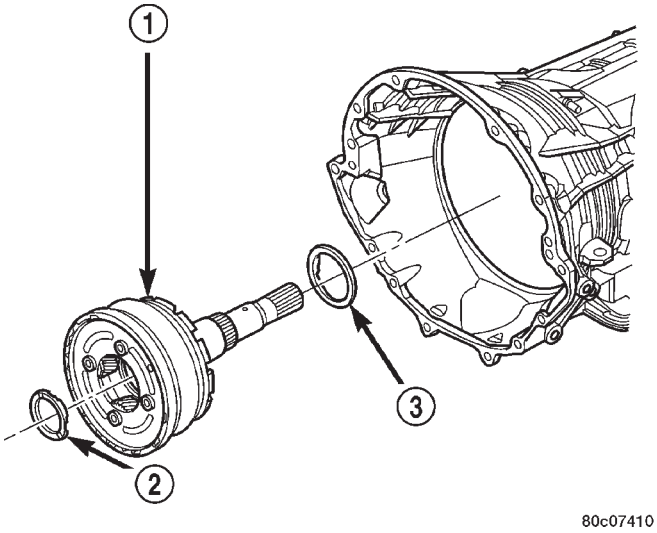

Fig. 28 Remove Input/Reverse Planetary Assembly

1 - INPUT/REVERSE PLANETARY ASSEMBLY
2 - BEARING NUMBER 9
3 - BEARING NUMBER 12

(41) Remove the snap-ring holding the low/reverse clutch retainer into the transmission case (Fig. 29).

(42) Remove the low/reverse clutch retainer from the transmission case (Fig. 29).

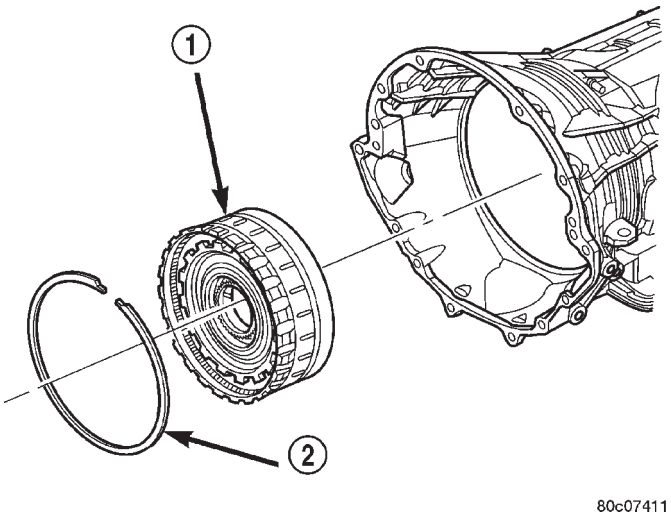

Fig. 29 Remove Low/Reverse Clutch Retainer

1 - LOW/REVERSE OVERRUNNING CLUTCH ASSEMBLY
2 - SNAP-RING

(43) Remove the park pawl rod and e-clip (Fig. 30).

(44) Remove the park pawl rod guide snap-ring (Fig. 30).

(45) Remove the park pawl rod guide (Fig. 30).

(46) Remove the park pawl pivot shaft, park pawl, and spring (Fig. 30).

(47) Remove the manual selector shaft (Fig. 30).

(48) Remove the manual selector shaft seal.

(49) Remove the dipstick tube seal.

CLEANING

The use of crocus cloth is permissible where necessary, providing it is used carefully. When used on shafts, or valves, use extreme care to avoid rounding off sharp edges. Sharp edges are vital as they prevent foreign matter from getting between the valve and valve bore.

Do not reuse oil seals, gaskets, seal rings, or O-rings during overhaul. Replace these parts as a matter of course. Also do not reuse snap rings or E-clips that are bent or distorted. Replace these parts as well.

Lubricate transmission parts with Mopar® ATF +4, Type 9602, transmission fluid during overhaul and assembly. Use petroleum jelly, Mopar® Door Ease, or Ru-Glyde to prelubricate seals, O-rings, and thrust washers. Petroleum jelly can also be used to hold parts in place during reassembly.

Clean the case in a solvent tank. Flush the case bores and fluid passages thoroughly with solvent. Dry the case and all fluid passages with compressed air. Be sure all solvent is removed from the case and that all fluid passages are clear.

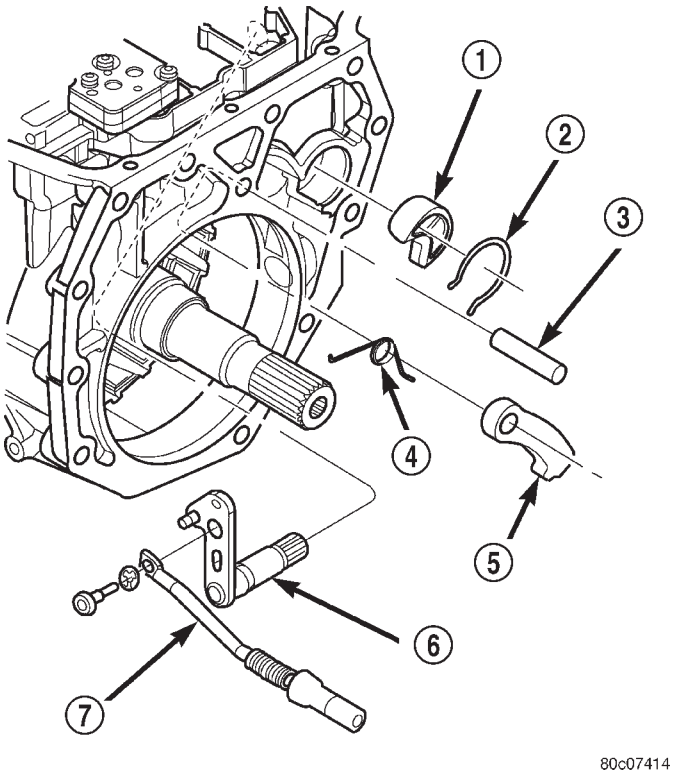

Fig. 30 Manual Shaft/Park Lock Components

1 - GUIDE
2 - SNAP-RING
3 - SHAFT
4 - SPRING
5 - PARK PAWL
6 - MANUAL SHAFT/LEVER
7 - PARK ROD

NOTE: Do not use shop towels or rags to dry the case (or any other transmission component) unless they are made from lint-free materials. Lint will stick to case surfaces and transmission components and circulate throughout the transmission after assembly. A sufficient quantity of lint can block fluid passages and interfere with valve body operation.

INSPECTION

Inspect the case for cracks, porous spots, worn bores, or damaged threads. Damaged threads can be repaired with Helicoil thread inserts. However, the case will have to be replaced if it exhibits any type of damage or wear.

ASSEMBLY

(1) Clean and inspect all components. Replace any components which show evidence of excessive wear or scoring.

(2) Install the cooler filter bypass valve.

(3) Torque the bypass valve to specification. The valve uses a tapered pipe thread and excessive torque can damage the transmission case. Tighten the cooler filter bypass valve to 11.3 N·m (100 in.lbs.).

(4) Install a new selector shaft seal using Seal Installer 8253 (Fig. 31).

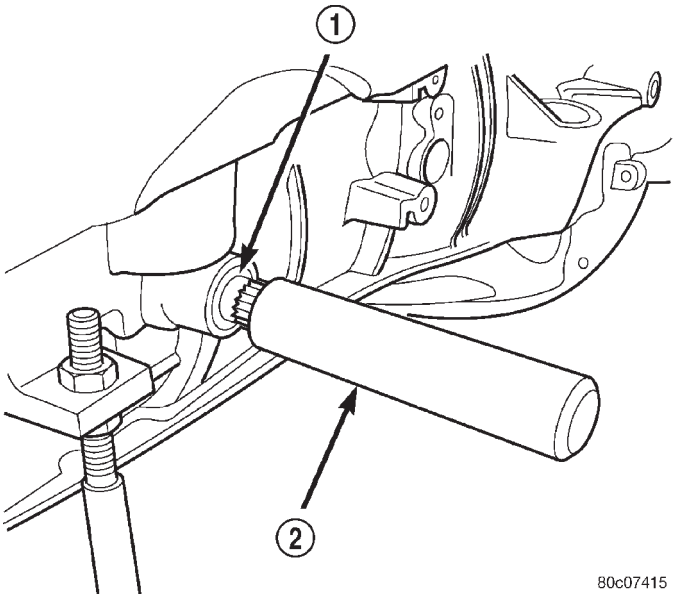

Fig. 31 Install Selector Shaft

1 - SEAL
2 - TOOL 8253

(5) Install the manual selector shaft and retaining screw. Tighten the manual selector shaft retaining screw to 28 N·m (250 in.lbs.).

(6) Install the park pawl, spring, and shaft (Fig. 32).

(7) Install the park rod and e-clip (Fig. 32).

(8) Install the park rod guide and snap-ring (Fig. 32).

(9) Install a new dipstick tube seal using Seal Installer 8254 (Fig. 33).

NOTE: Before final assembly of transmission centerline, the 2C/4C clutch components should be installed into position and measured as follows:

(10) Install the 2C reaction plate into the transmission case (Fig. 34). The reaction plate is directional. The plate must be installed with the flat side toward the front of the transmission.

(11) Install the 2C clutch pack into the transmission case (Fig. 34).

(12) Install the flat 2C clutch snap-ring into the transmission case (Fig. 34).

AUTOMATIC TRANSMISSION - 545RFE (Continued)

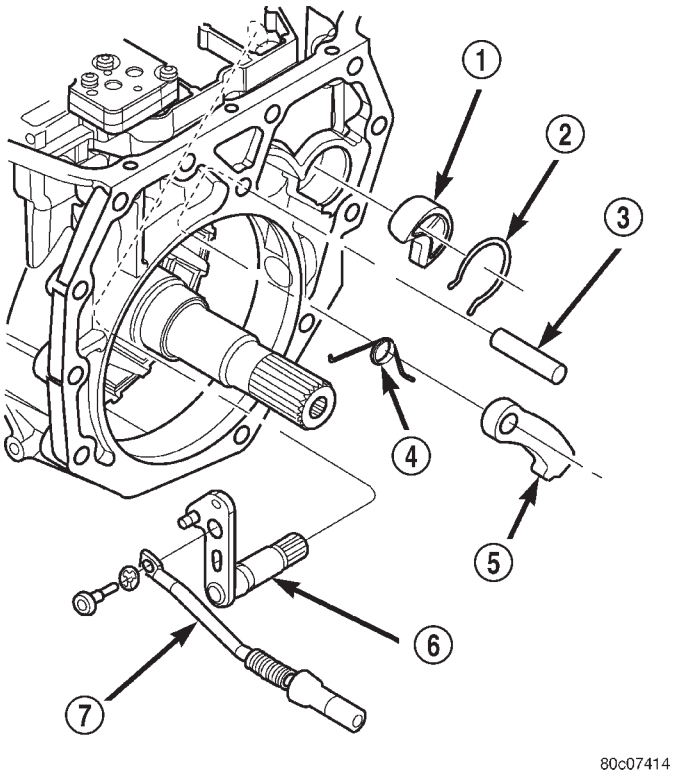

Fig. 32 Manual Shaft/Park Lock Components

1 - GUIDE
2 - SNAP-RING
3 - SHAFT
4 - SPRING
5 - PARK PAWL
6 - MANUAL SHAFT/LEVER
7 - PARK ROD

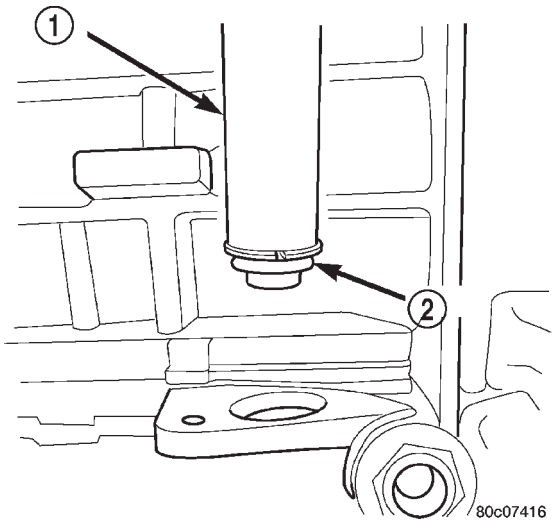

Fig. 33 Install Dipstick Tube Seal Using Tool 8254

1 - TOOL 8254
2 - SEAL

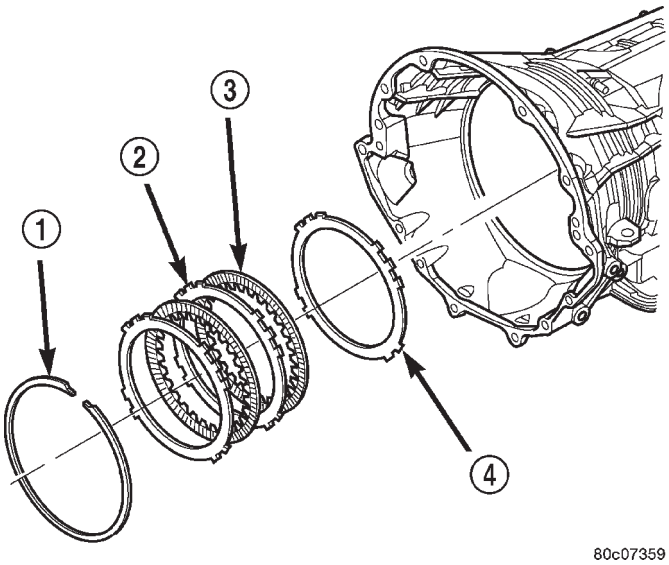

Fig. 34 Install 2C Clutch Pack

1 - SNAP-RING
2 - PLATE
3 - DISC
4 - REACTION PLATE

(13) Install the 4C retainer/bulkhead into the transmission case. Make sure that the oil feed holes are pointing toward the valve body area.

(14) Install the 4C retainer/bulkhead tapered snap-ring into the transmission case. Make sure that the open ends of the snap-ring are located in the case opening toward the valve body area.

(15) Using a feeler gauge through the opening in the rear of the transmission case, measure the 2C clutch pack clearance between the 2C reaction plate and the transmission case at four different points. The average of these measurements is the 2C clutch pack clearance. The correct clutch clearance is 0.533-1.27 mm (0.021-0.050 in.). The reaction plate is not selective. If the clutch pack clearance is not within specification, the reaction plate, all the friction discs, and steels must be replaced.

(16) Remove the 4C retainer/bulkhead and all of the 2C clutch components from the transmission case.

(17) Install the low/reverse clutch assembly (Fig. 35). Make sure that the oil feed hole points toward the valve body area and that the bleed orifice is aligned with the notch in the rear of the transmission case.

(18) Install the snap-ring to hold the low/reverse clutch retainer into the transmission case (Fig. 35). The snap-ring is tapered and must be installed with the tapered side forward. Once installed, verify that the snap-ring is fully seated in the snap-ring groove.

(19) Air check the low/reverse clutch and verify correct overrunning clutch operation.

AUTOMATIC TRANSMISSION - 545RFE (Continued)

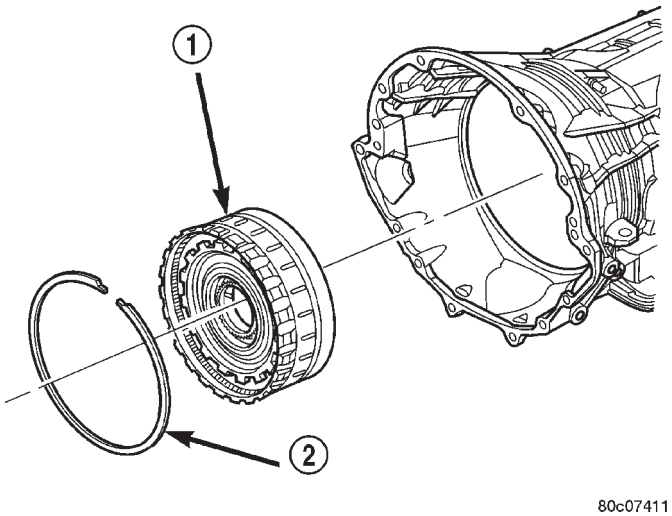

Fig. 35 Install Low/Reverse Clutch Retainer

1 - LOW/REVERSE OVERRUNNING CLUTCH ASSEMBLY
2 - SNAP-RING

(20) Install the reverse/input planetary assembly through the low/reverse clutch assembly (Fig. 36).

(21) Install the number 12 bearing over the output shaft of the rear planetary gear set and onto the low/reverse clutch assembly. The flat side of the bearing goes toward the clutch assembly.

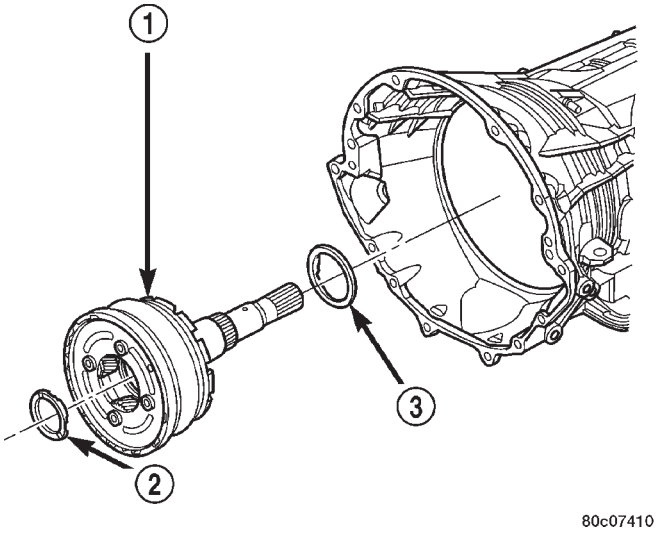

Fig. 36 Install Input/Reverse Planetary Assembly

1 - INPUT/REVERSE PLANETARY ASSEMBLY
2 - BEARING NUMBER 9
3 - BEARING NUMBER 12

(22) Install the park sprag onto the output shaft (Fig. 37).

(23) Install the snap-ring to hold the park sprag onto the output shaft (Fig. 38).

(24) Install the 2C reaction plate into the transmission case (Fig. 39). The reaction plate is directional. The plate must be installed with the flat side toward the front of the transmission.

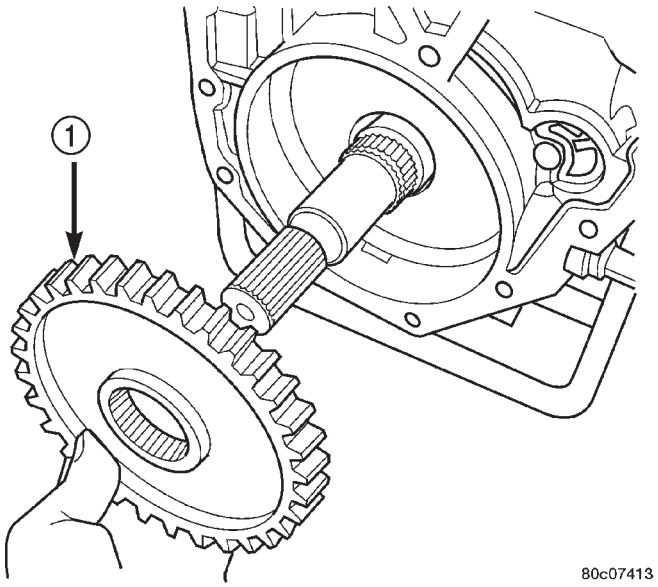

Fig. 37 Install Park Sprag Gear

1 - PARK SPRAG GEAR

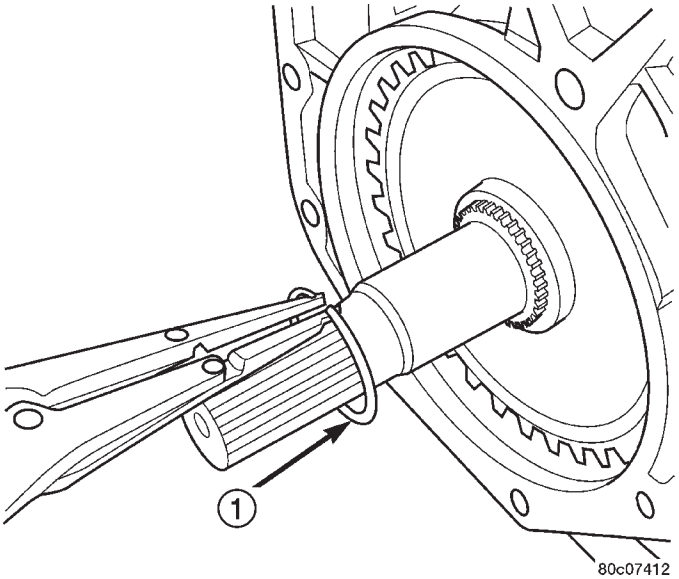

Fig. 38 Install Park Sprag Snap-Ring

1 - SNAP-RING

(25) Install the 2C clutch pack into the transmission case (Fig. 39).

(26) Install the number 8 bearing inside the reaction carrier with the round side against the planetary carrier.

(27) Install the reaction planetary gear set and the number 9 bearing into the transmission case (Fig. 40).

AUTOMATIC TRANSMISSION - 545RFE (Continued)

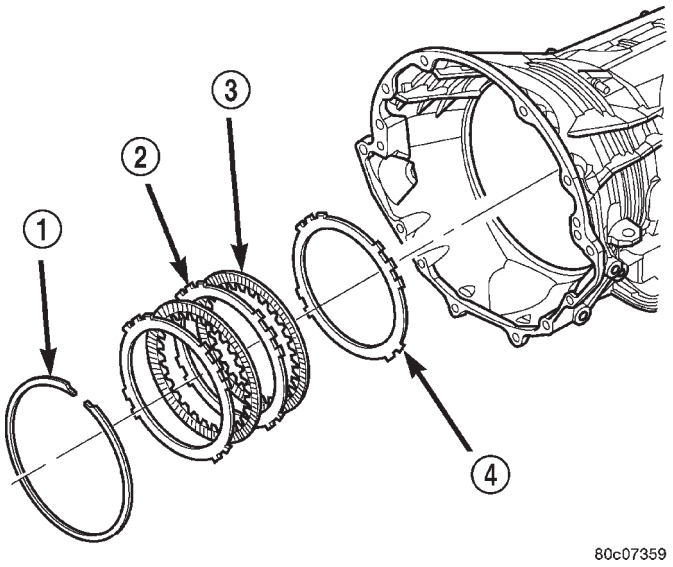

Fig. 39 Install 2C Clutch Pack

1 - SNAP-RING
2 - PLATE
3 - DISC
4 - REACTION PLATE

(28) Install the flat 2C clutch snap-ring into the transmission case (Fig. 39).

(29) Install the reaction sun gear into the reaction planetary gear set. **Make sure** the small shoulder is facing the front of the transmission (Fig. 40).

(30) Install the number 7 bearing onto the reaction sun gear with the flat side against the sun gear (Fig. 40).

(31) Install the output shaft selective thrust plate onto the reaction annulus with the oil grooves facing the annulus gear and the tabs and notches aligned as shown in (Fig. 41).

(32) Install the number 6 bearing against the output shaft selective spacer with the flat side against the spacer (Fig. 40).

(33) Install the reaction annulus into the reaction planetary gear set (Fig. 40).

(34) Install the 4C retainer/bulkhead into the transmission case. Make sure that the oil feed holes are pointing toward the valve body area. Rotate the

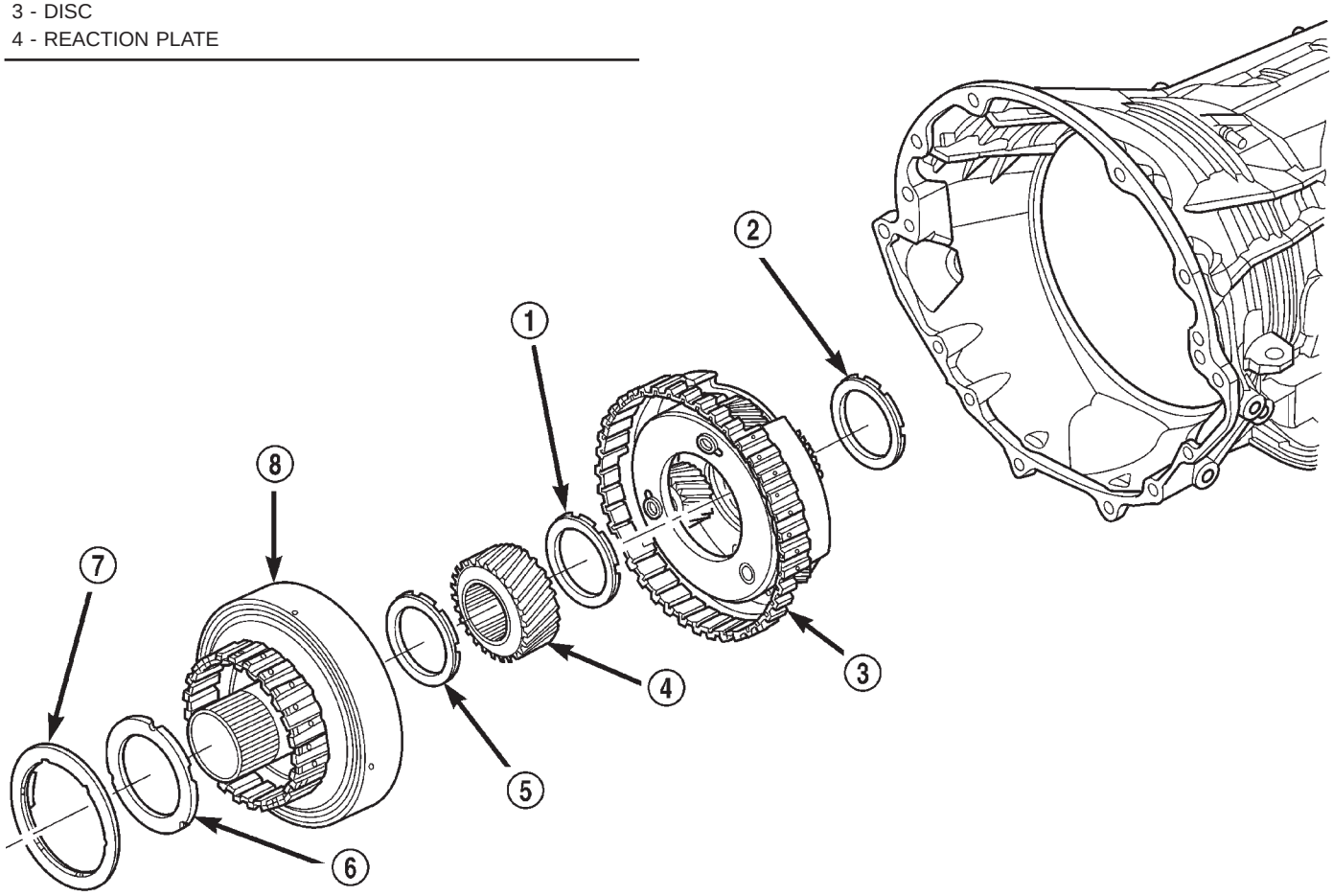

Fig. 40 Install Reaction Annulus and Carrier

1 - BEARING NUMBER 8
2 - BEARING NUMBER 9
3 - REACTION PLANETARY CARRIER
4 - REACTION SUN GEAR
5 - BEARING NUMBER 7
6 - THRUST PLATE
7 - BEARING NUMBER 6
8 - REACTION ANNULUS

AUTOMATIC TRANSMISSION - 545RFE (Continued)

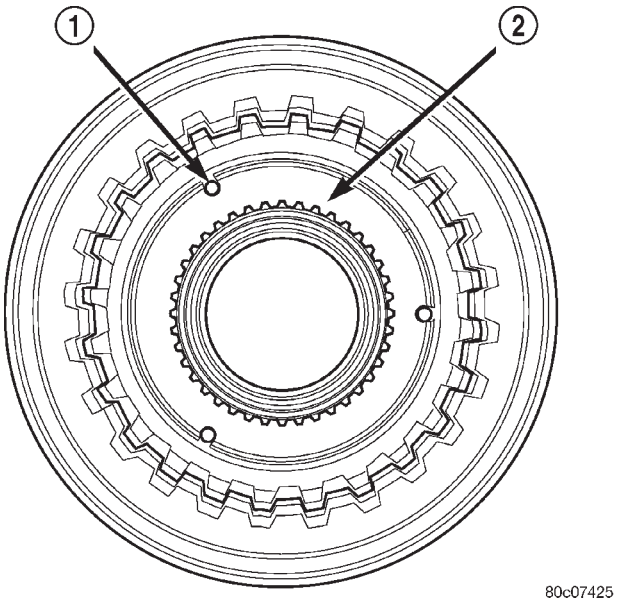

Fig. 41 Thrust Plate Alignment

1 - LOCATING LUG (3)
2 - THRUST PLATE

reaction annulus during the installation of the 4C retainer/bulkhead to ease installation.

(35) Install the 4C retainer/bulkhead tapered snap-ring into the transmission case (Fig. 42). Make sure that the open ends of the snap-ring are located in the case opening toward the valve body area.

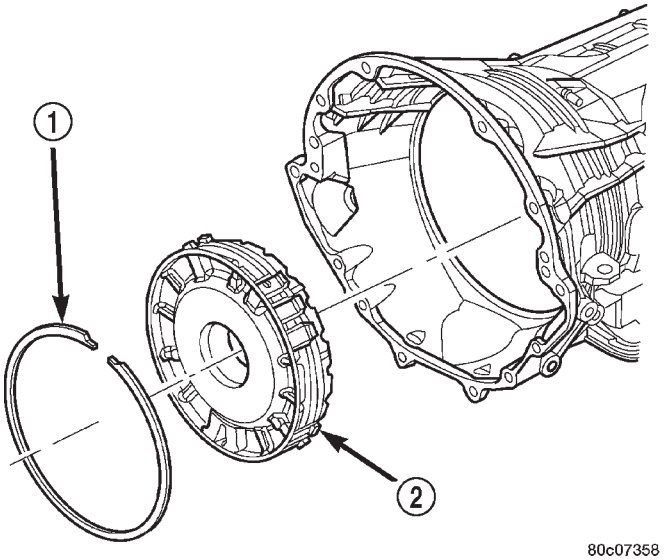

Fig. 42 Install 4C Clutch Retainer/Bulkhead

1 - SNAP-RING
2 - 4C CLUTCH RETAINER/BULKHEAD

(36) Air check the 2C and 4C clutch operation.

(37) Using Alignment Plate 8261, Adapter 8266-17 from End-Play Tool Set 8266 and Dial Indicator C-3339, measure and record the output shaft end-play (Fig. 43). The correct output shaft end-play is 0.22-0.55 mm (0.009-0.021 in.). Adjust as necessary. Install the chosen output shaft selective spacer and re-measure end-play to verify selection.

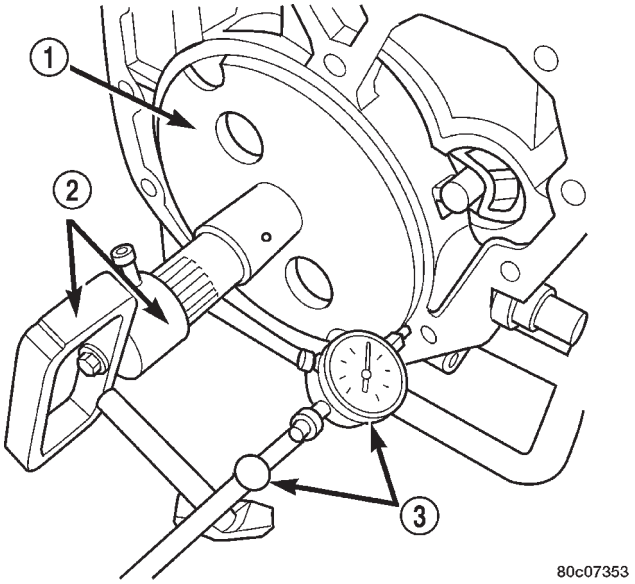

Fig. 43 Measure Output Shaft End Play

1 - TOOL 8261
2 - TOOL 8266
3 - TOOL C-3339

(38) Apply a bead of RTV silicone and install the extension/adapter housing onto the transmission case.

(39) Install and torque the bolts to hold the extension/adapter housing onto the transmission case. The correct torque is 54 N·m (40 ft.lbs.).

(40) Install the number 5 bearing and spacer onto the 4C retainer/bulkhead (Fig. 44).

(41) Install the input clutch assembly into the transmission case (Fig. 44). Make sure that the input clutch assembly is fully installed by performing a visual inspection through the input speed sensor hole. If the tone wheel on the input clutch assembly is visible, the assembly is fully installed.

(42) Install the number 1 bearing with the flat side down in the pocket of the input clutch assembly (Fig. 44).

(43) Install the oil pump into the transmission case (Fig. 45).

(44) Install the bolts to hold the oil pump into the transmission case. Tighten the oil pump bolts to 28 N·m (250 in.lbs.).

(45) Using Adapter 8266-1 from End-Play Tool Set 8266 and Dial Indicator C-3339, measure and record the input shaft end-play (Fig. 46). The correct end-play is 0.46-0.89 mm (0.018-0.035 in.). Adjust as nec-

AUTOMATIC TRANSMISSION - 545RFE (Continued)

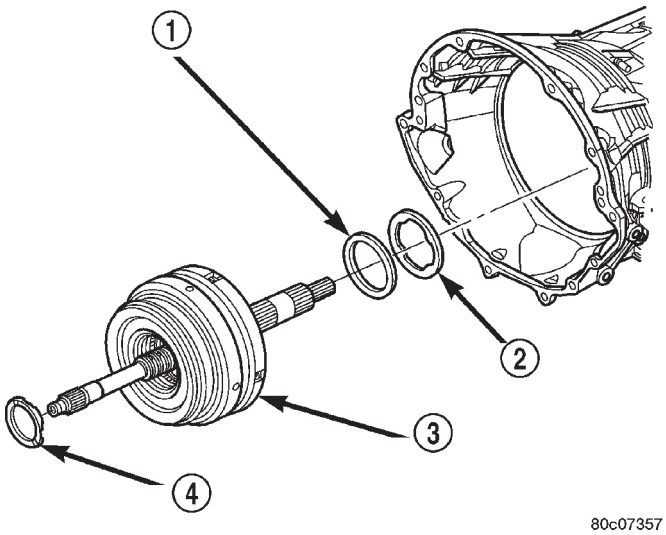

Fig. 44 Install Input Clutch Assembly

1 - BEARING NUMBER 5
2 - THRUST PLATE (SELECT)
3 - INPUT CLUTCH ASSEMBLY
4 - BEARING NUMBER 1

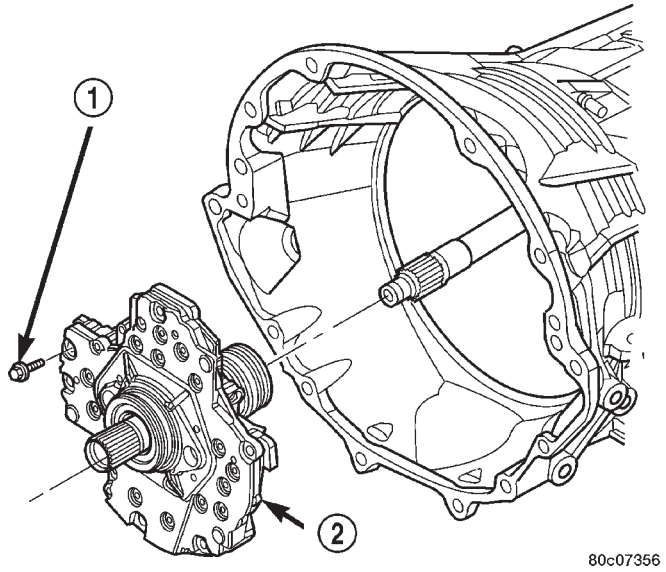

Fig. 45 Install Oil Pump

1 - OIL PUMP TO CASE BOLT (6)
2 - OIL PUMP

essary. Install the chosen spacer on the number 5 bearing and re-measure end-play to verify selection.

NOTE: When measuring the input shaft end-play, two ″stops″ will be felt. When the input shaft is pushed inward and the dial indicator zeroed, the first ″stop″ felt when the input shaft is pulled outward is the movement of the input shaft in the input clutch housing hub. This value should not be included in the end-play measured value and therefore must be recorded and subtracted from the dial indicator reading.

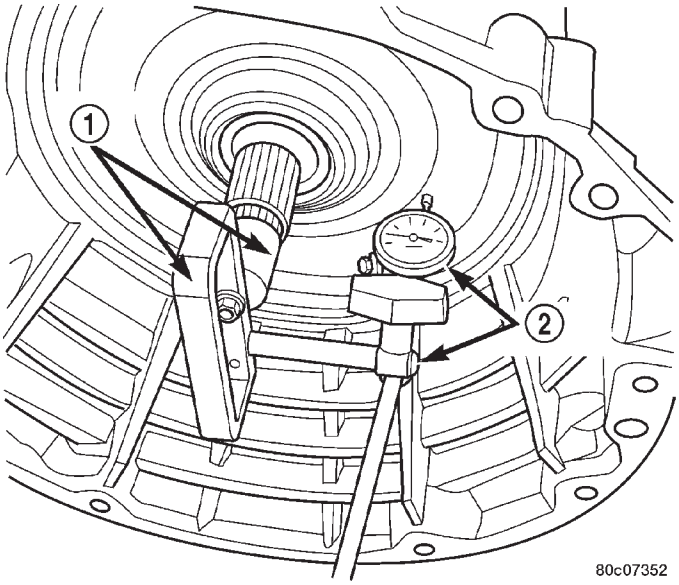

Fig. 46 Measure Input Shaft End Play

1 - TOOL 8266
2 - TOOL C-3339

(46) Install the transmission front cover into the transmission case (Fig. 47).

(47) Install the outer snap-ring to hold the transmission front cover into the transmission case (Fig. 47).

(48) Partially install the inner transmission front cover snap-ring onto the oil pump (Fig. 47).

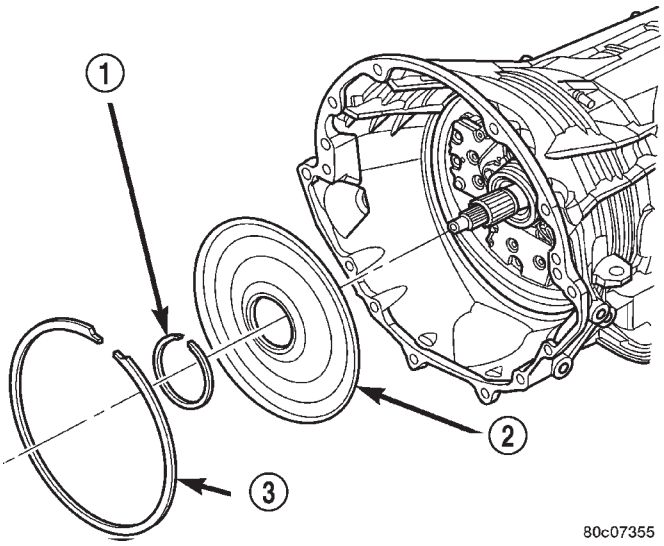

Fig. 47 Install the Transmission Front Cover

1 - INNER SNAP-RING
2 - TRANSMISSION COVER
3 - OUTER SNAP-RING

AUTOMATIC TRANSMISSION - 545RFE (Continued)

(49) Using Installer 8255, install the inner transmission front cover snap-ring the remainder of the way onto the oil pump (Fig. 48).

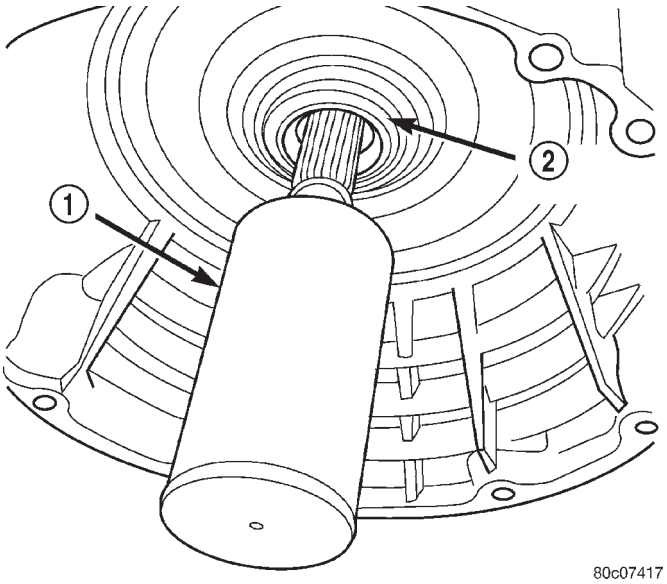

Fig. 48 Seat Snap-Ring Using Tool 8255

1 - TOOL 8255
2 - SNAP-RING

(50) Install the valve body (Fig. 49). Tighten the valve body to transmission case bolts to 12 N·m (105 in.lbs.).

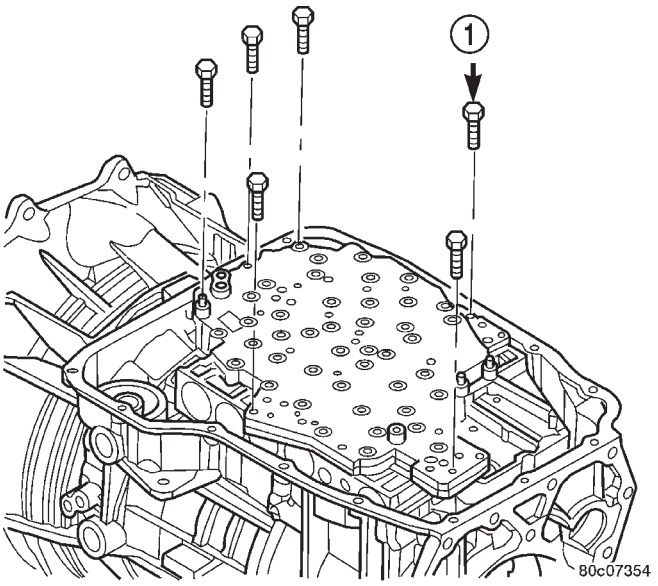

Fig. 49 Install Valve Body Assembly

1 - VALVE BODY TO CASE BOLT (6)

(51) Install the primary oil filter and the oil cooler return filter (Fig. 50). Tighten the screws to hold the primary oil filter to the valve body to 4.5 N·m (40 in.lbs.). Using Oil Filter Wrench 8321, tighten the cooler return oil filter to the transmission case to 14 N·m (125 in.lbs.).

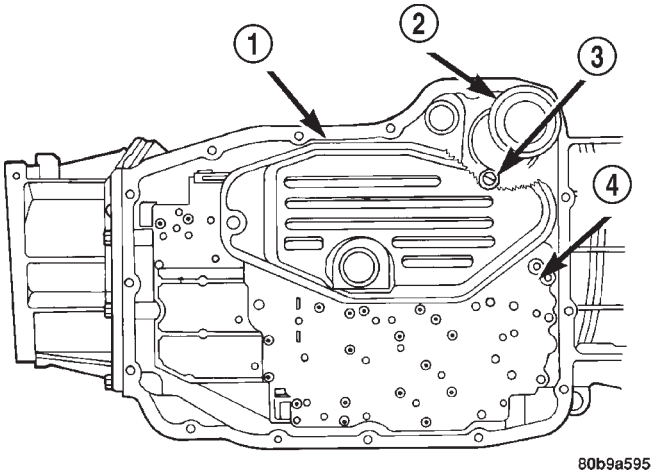

Fig. 50 Install Primary Oil and Cooler Filters

1 - PRIMARY OIL FILTER
2 - COOLER RETURN FILTER
3 - FILTER BYPASS VALVE
4 - VALVE BODY

(52) Apply RTV silicone to the oil pan and install the transmission oil pan. Tighten the bolts to 12 N·m (105 in.lbs.).

(53) Install the input, output, and line pressure sensors (Fig. 51). Tighten the bolts to 12 N·m (105 in.lbs.).

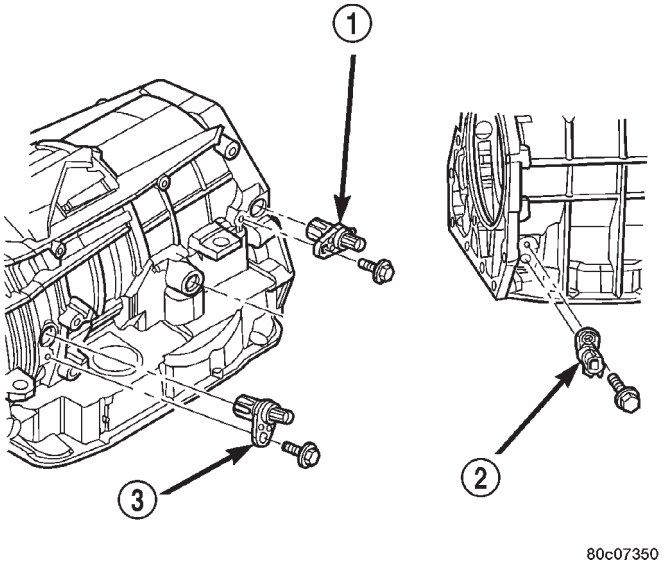

Fig. 51 Install Input, Output, and Line Pressure Sensors

1 - OUTPUT SPEED SENSOR
2 - LINE PRESSURE SENSOR
3 - INPUT SPEED SENSOR

(54) Install the manual shift lever from the transmission. Torque the retaining cross-bolt to 16 N·m (140 in.lbs.).

AUTOMATIC TRANSMISSION - 545RFE (Continued)

INSTALLATION

(1) Check torque converter hub and hub drive flats for sharp edges burrs, scratches, or nicks. Polish the hub and flats with 320/400 grit paper and crocus cloth if necessary. Verify that the converter hub o-ring is properly installed and is free of any debris. The hub must be smooth to avoid damaging pump seal at installation.

(2) If a replacement transmission is being installed, transfer any components necessary, such as the manual shift lever and shift cable bracket, from the original transmission onto the replacement transmission.

(3) Lubricate oil pump seal lip with transmission fluid.

(4) Align converter and oil pump.

(5) Carefully insert converter in oil pump. Then rotate converter back and forth until fully seated in pump gears.

(6) Check converter seating with steel scale and straightedge (Fig. 52). Surface of converter lugs should be at least 13 mm (1/2 in.) to rear of straightedge when converter is fully seated.

(7) Temporarily secure converter with C-clamp.

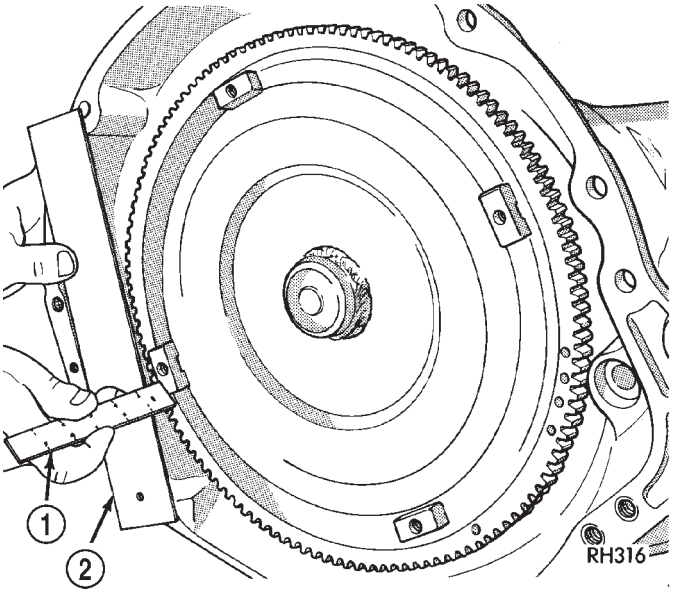

Fig. 52 Checking Torque Converter Seating - Typical

1 - SCALE
2 - STRAIGHTEDGE

(8) Position transmission on jack and secure it with chains.

(9) Check condition of converter driveplate. Replace the plate if cracked, distorted or damaged. **Also be sure transmission dowel pins are seated in engine block and protrude far enough to hold transmission in alignment.**

(10) Apply a light coating of Mopar® High Temp Grease to the torque converter hub pocket in the rear

(11) Raise transmission and align converter with drive plate and converter housing with engine block.

(12) Move transmission forward. Then raise, lower or tilt transmission to align converter housing with engine block dowels.

(13) Carefully work transmission forward and over engine block dowels until converter hub is seated in crankshaft.

(14) Install two bolts to attach converter housing to engine.

(15) Install remaining torque converter housing to engine bolts. Tighten to 68 N·m (50 ft.lbs.).

(16) Install rear transmission crossmember. Tighten crossmember to frame bolts to 68 N·m (50 ft.lbs.).

(17) Install rear support to transmission. Tighten bolts to 47 N·m (35 ft.lbs.).

(18) Lower transmission onto crossmember and install bolts attaching transmission mount to crossmember. Tighten clevis bracket to crossmember bolts to 47 N·m (35 ft.lbs.). Tighten the clevis bracket to rear support bolt to 68 N·m (50 ft.lbs.).

(19) Remove engine support fixture.

(20) Install new plastic retainer grommet on any shift cable that was disconnected. Grommets should not be reused. Use pry tool to remove rod from grommet and cut away old grommet. Use pliers to snap new grommet into cable and to snap grommet onto lever.

(21) Connect gearshift cable to transmission.

(22) Connect wires to solenoid and pressure switch assembly connector, input and output speed sensors, and line pressure sensor. Be sure transmission harnesses are properly routed.

CAUTION: It is essential that correct length bolts be used to attach the converter to the driveplate. Bolts that are too long will damage the clutch surface inside the converter.

(23) Install all torque converter-to-driveplate bolts by hand.

(24) Verify that the torque converter is pulled flush to the driveplate. Tighten bolts to 31 N·m (270 in. lbs.).

(25) Install starter motor and cooler line bracket.

(26) Connect cooler lines to transmission.

(27) Install transmission fill tube.

(28) Install exhaust components.

(29) Install transfer case. Tighten transfer case nuts to 35 N·m (26 ft.lbs.).

(30) Install the transfer case shift cable to the cable support bracket and the transfer case shift lever.

(31) Install the transmission collar onto the transmission and the engine. Tighten the bolts to 54 N·m (40 ft.lbs.).

(32) Align and connect propeller shaft(s).

(33) Adjust gearshift cable if necessary.

(34) Lower vehicle.

(35) Fill transmission with Mopar® ATF +4, type 9602, Automatic Transmission fluid.

SCHEMATICS AND DIAGRAMS

HYDRAULIC SCHEMATICS

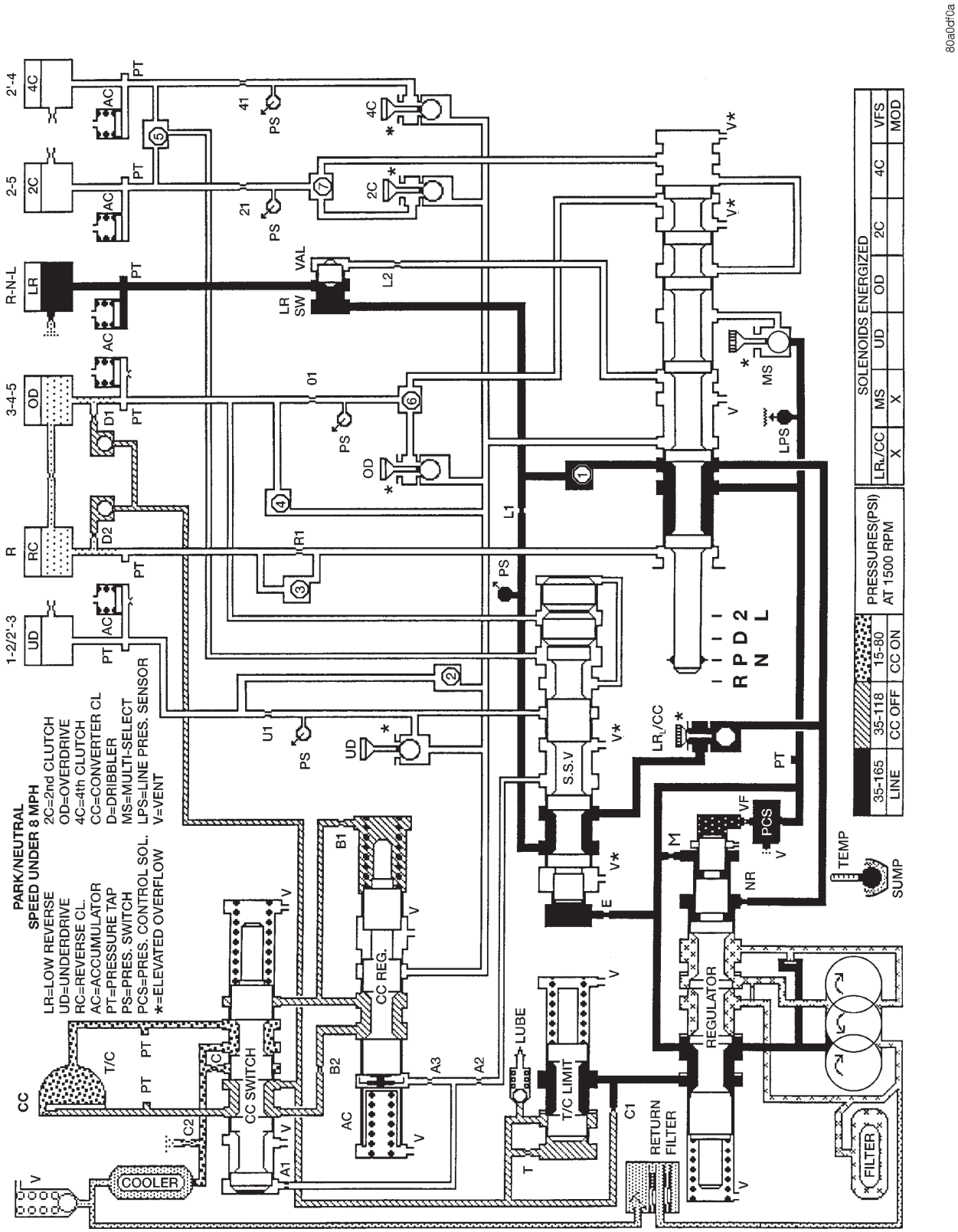

545RFE HYDRAULIC SCHEMATIC

SCHEMATICS AND DIAGRAMS (Continued)

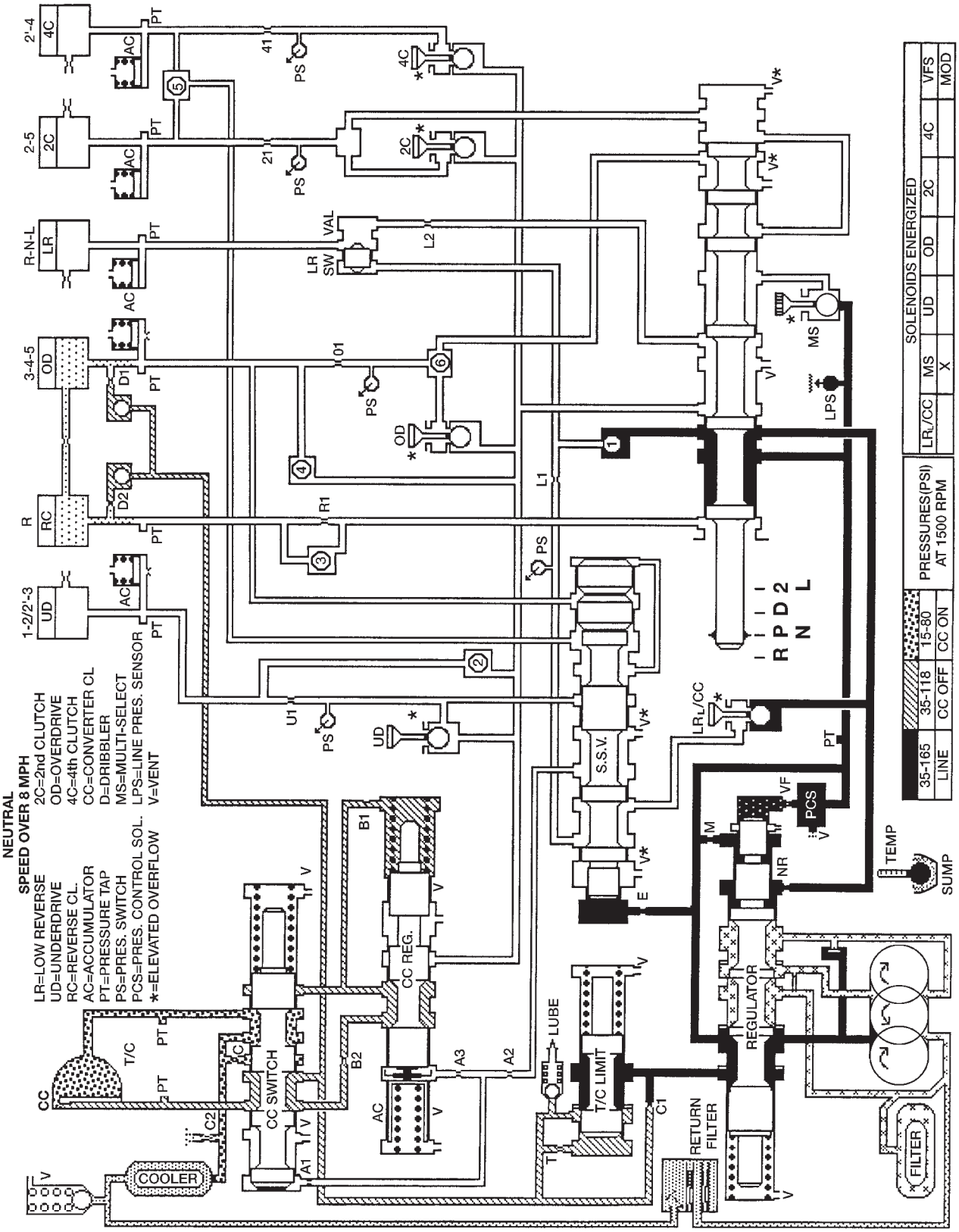

545RFE HYDRAULIC SCHEMATIC

SCHEMATICS AND DIAGRAMS (Continued)

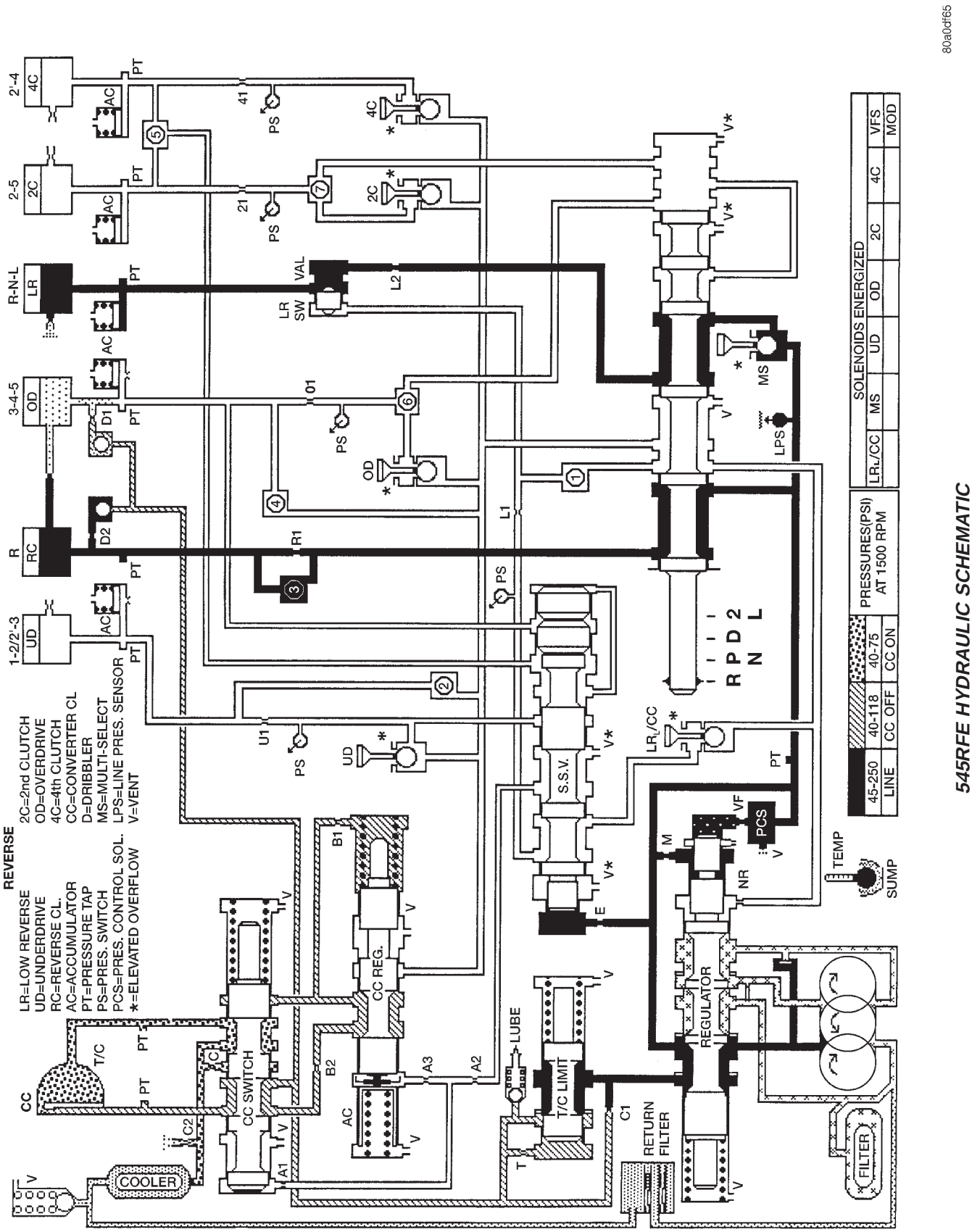

SCHEMATICS AND DIAGRAMS (Continued)

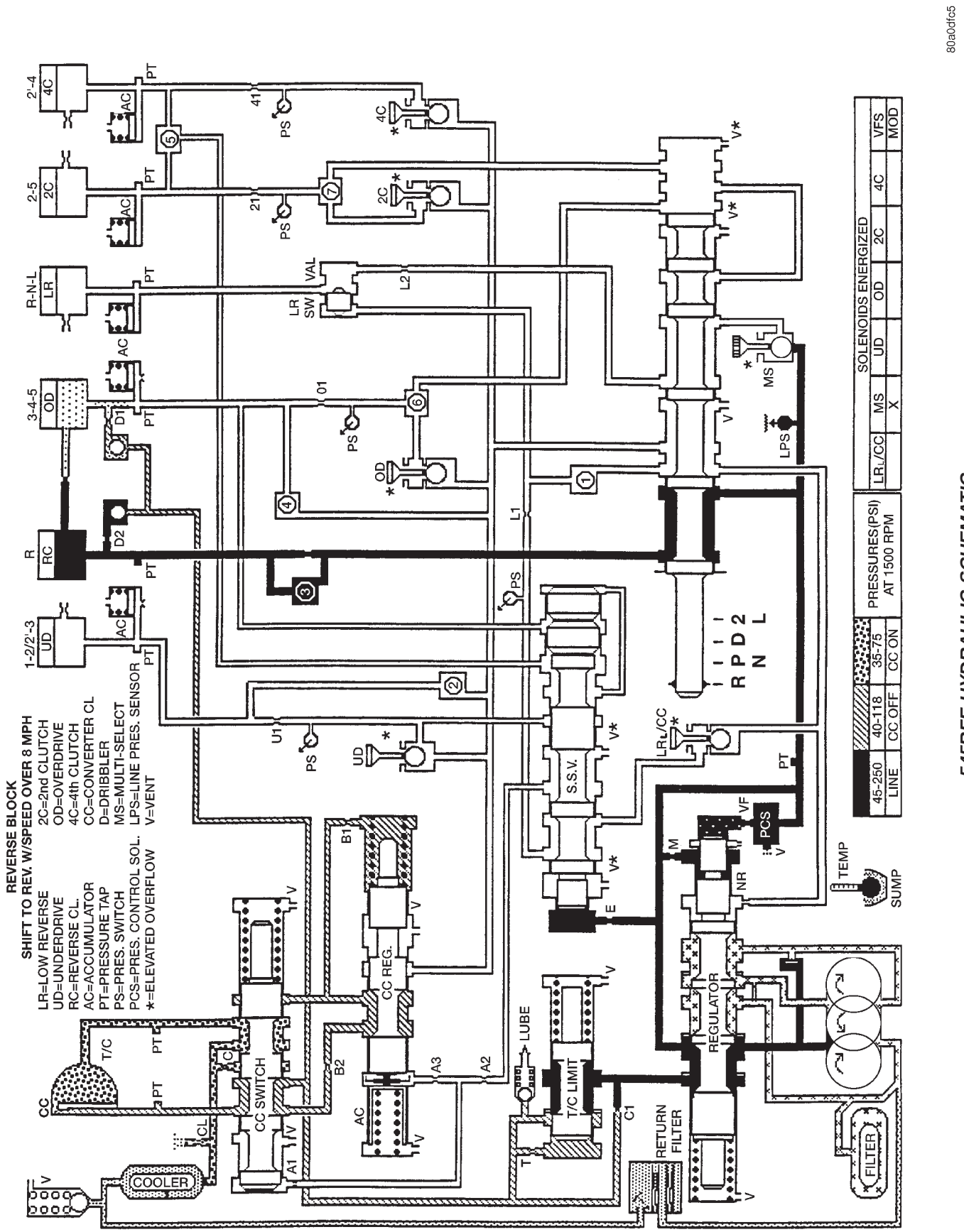

545RFE HYDRAULIC SCHEMATIC

SCHEMATICS AND DIAGRAMS (Continued)

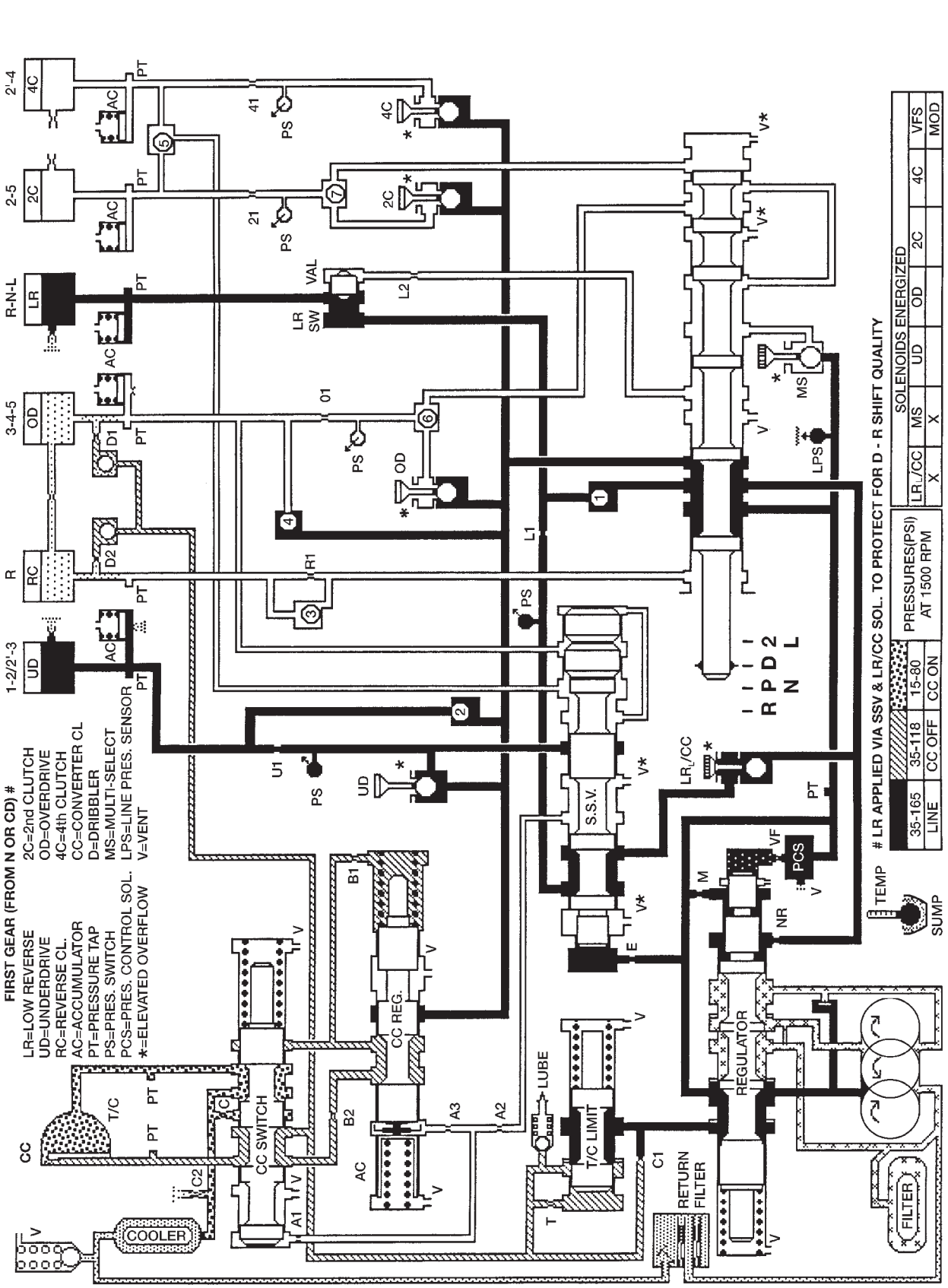

545RFE HYDRAULIC SCHEMATIC

SCHEMATICS AND DIAGRAMS (Continued)

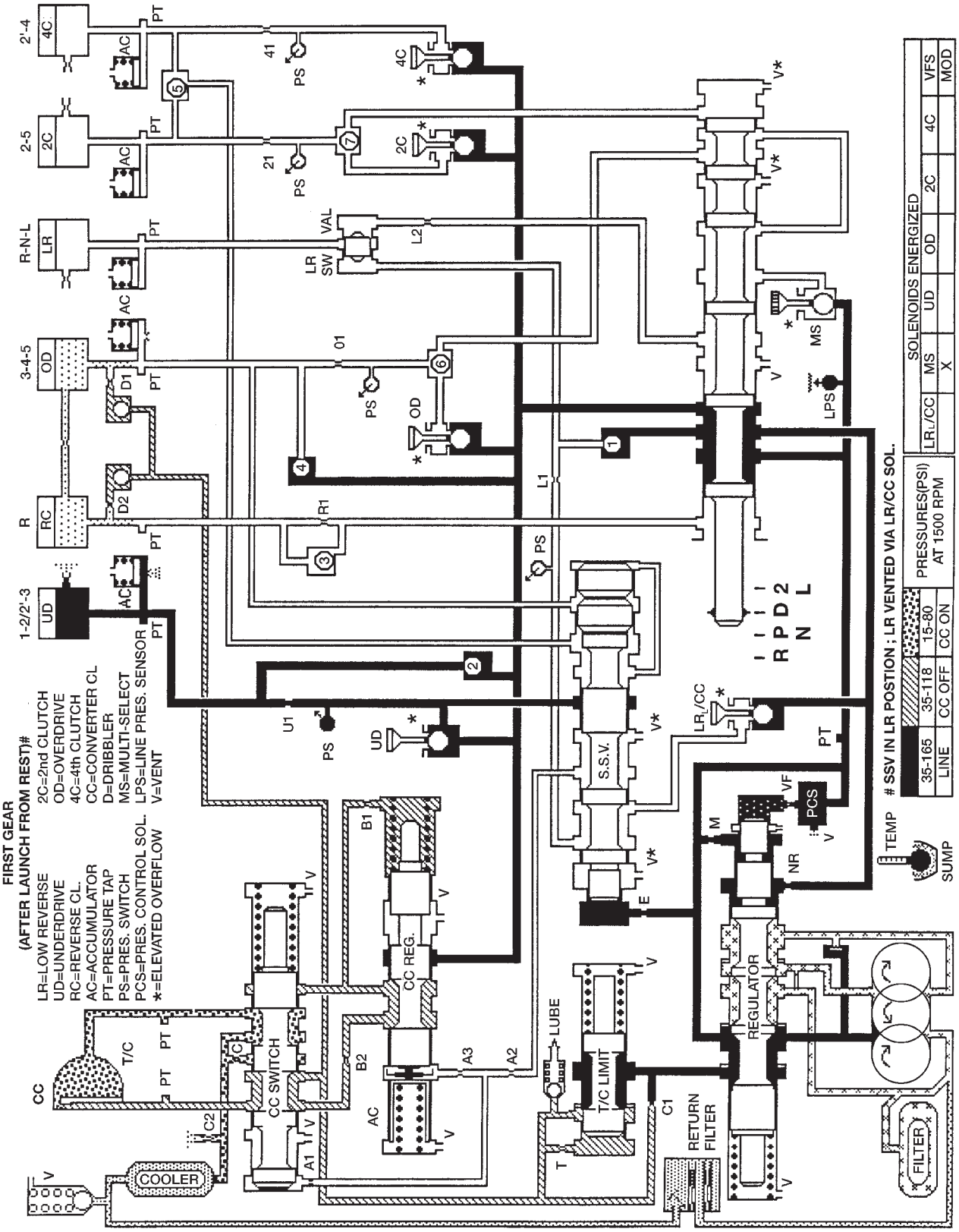

545RFE HYDRAULIC SCHEMATIC

SCHEMATICS AND DIAGRAMS (Continued)

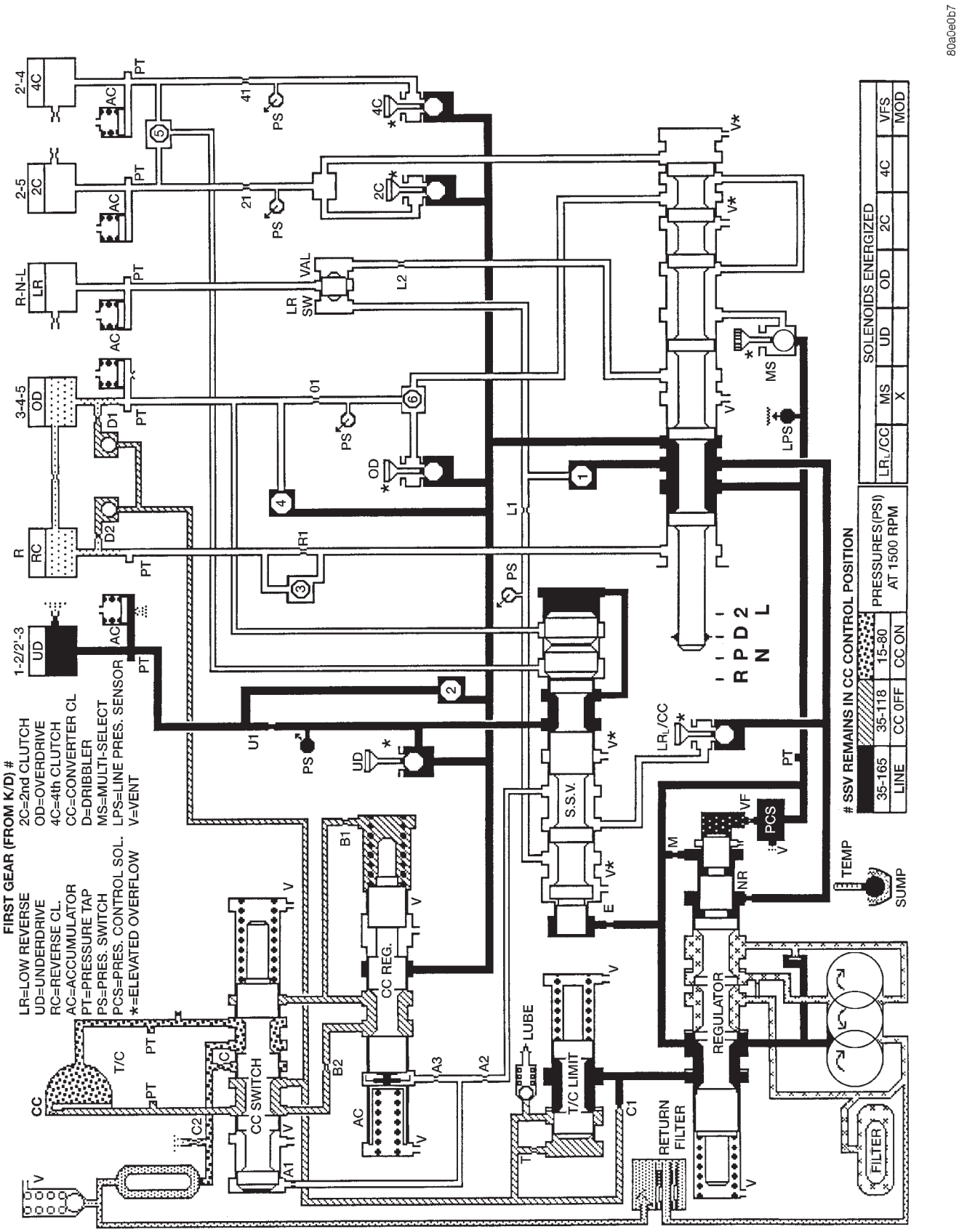

545RFE HYDRAULIC SCHEMATIC

SCHEMATICS AND DIAGRAMS (Continued)

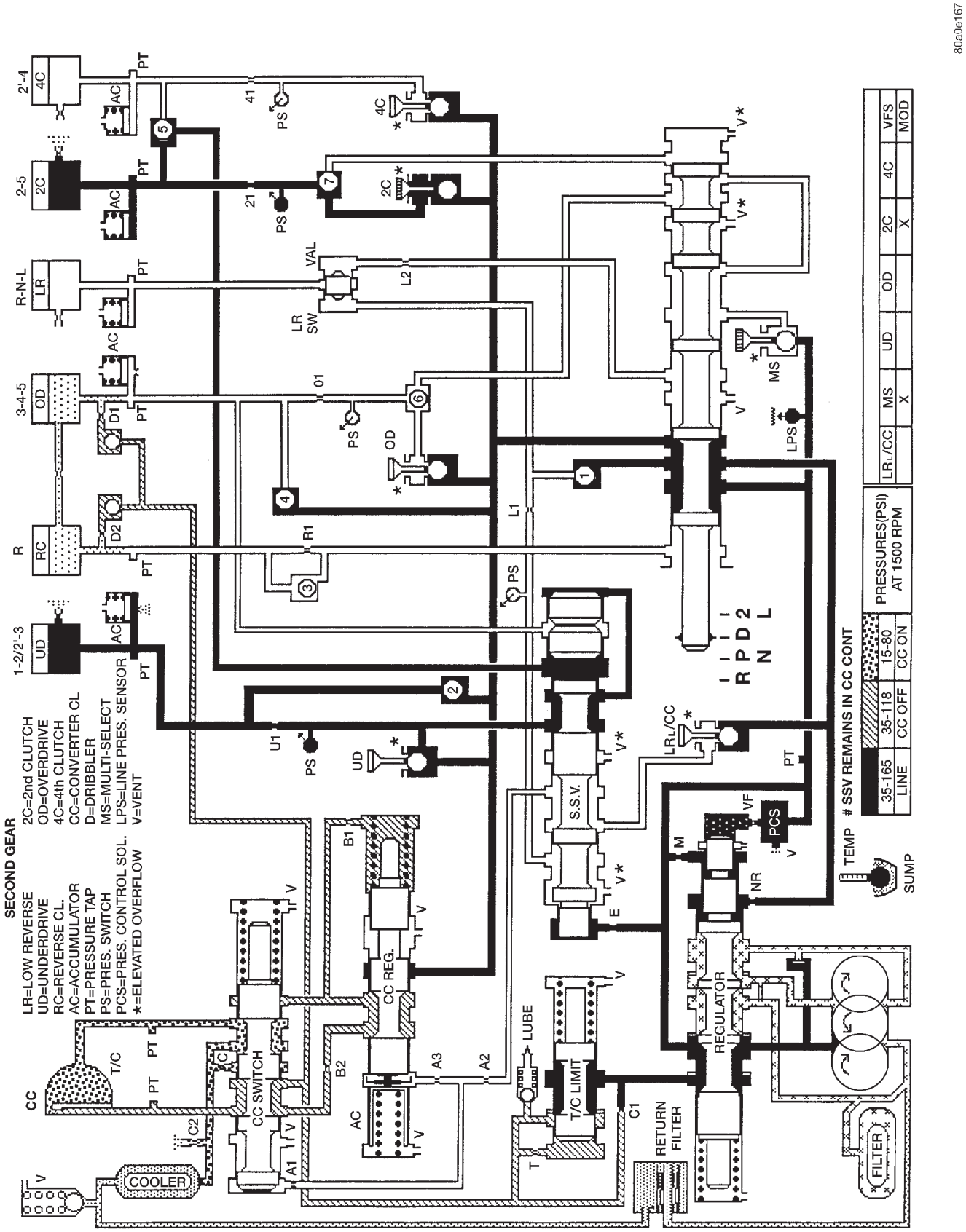

545RFE HYDRAULIC SCHEMATIC

SCHEMATICS AND DIAGRAMS (Continued)

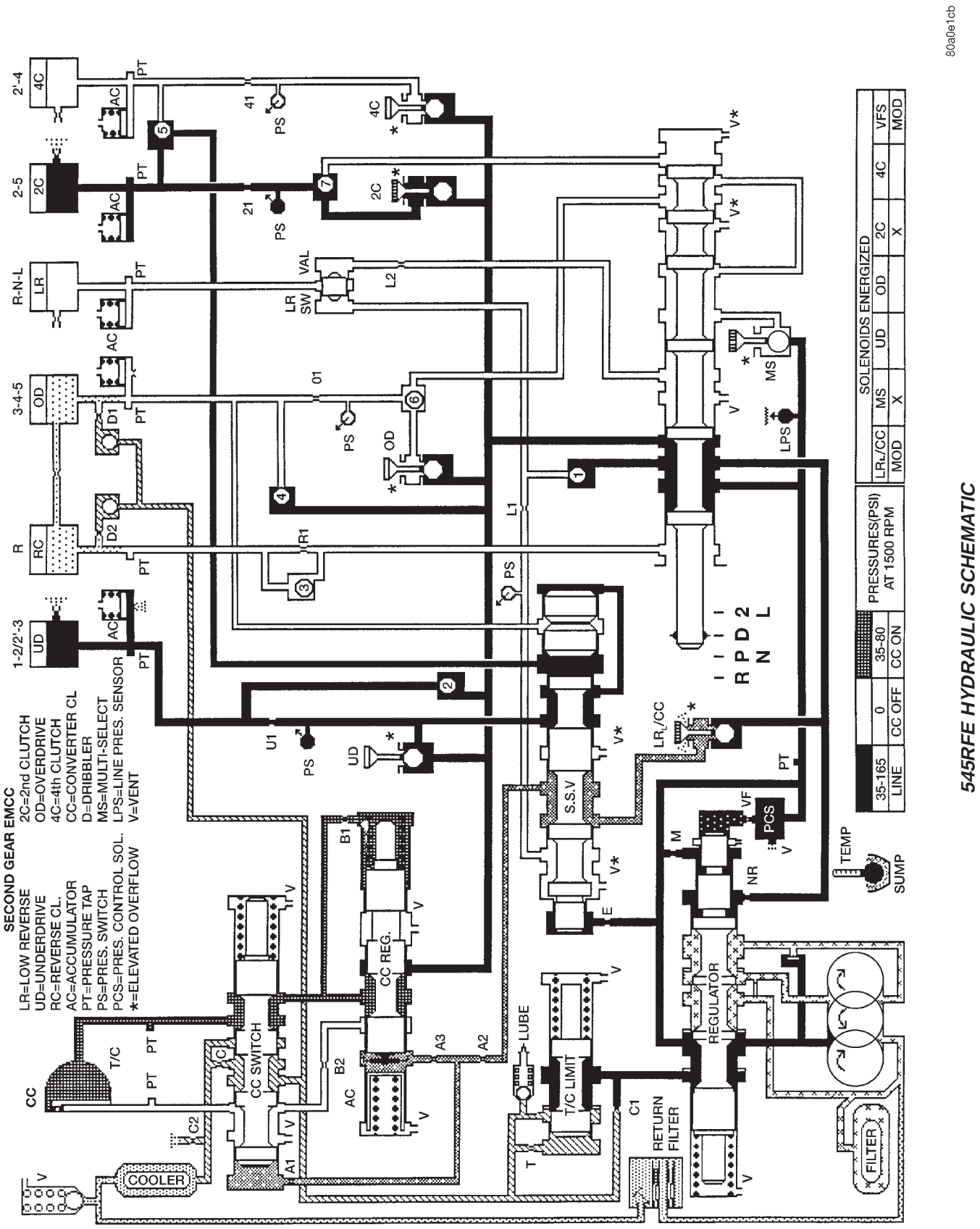

545RFE HYDRAULIC SCHEMATIC

SCHEMATICS AND DIAGRAMS (Continued)

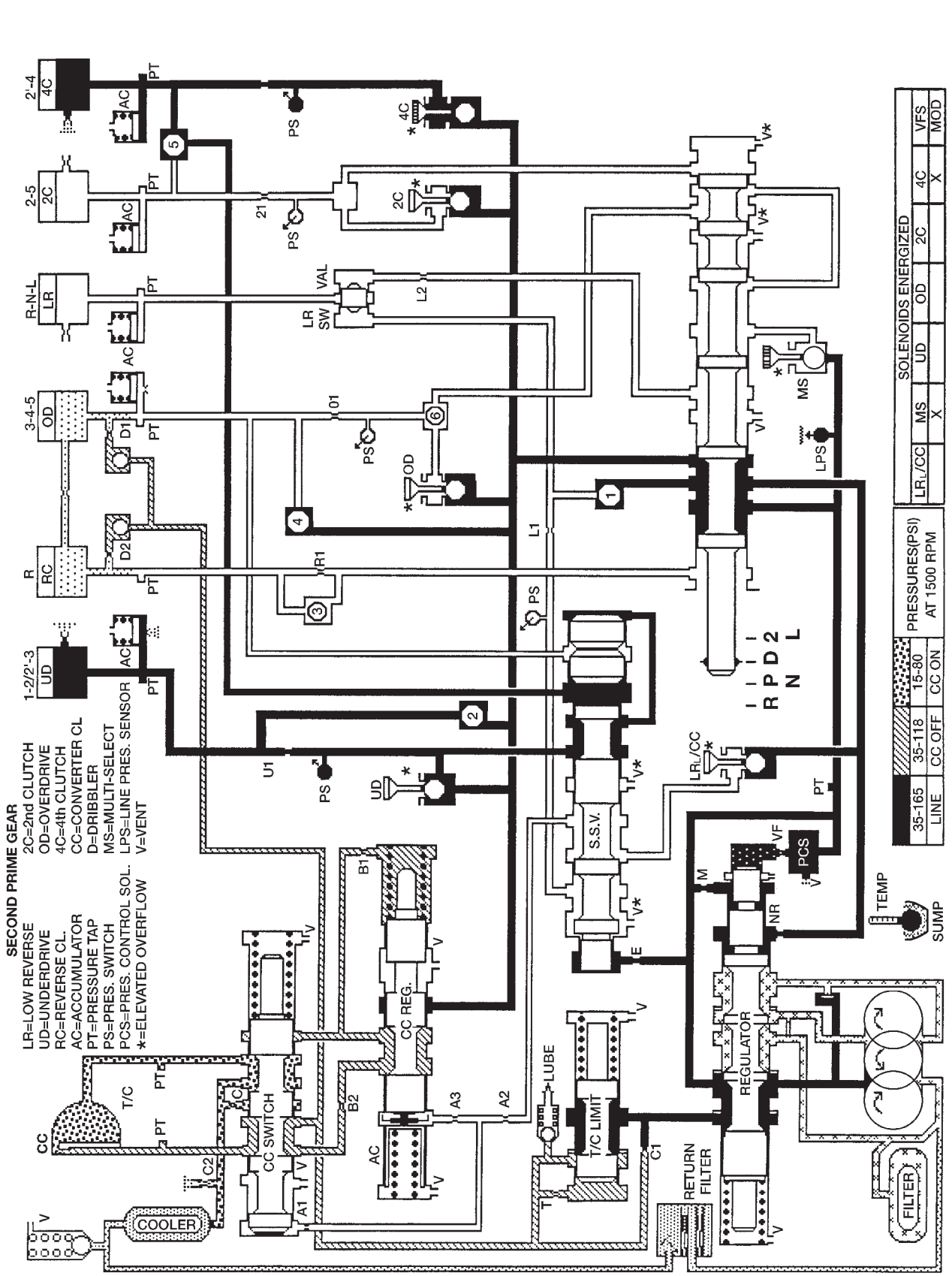

545RFE HYDRAULIC SCHEMATIC

SCHEMATICS AND DIAGRAMS (Continued)

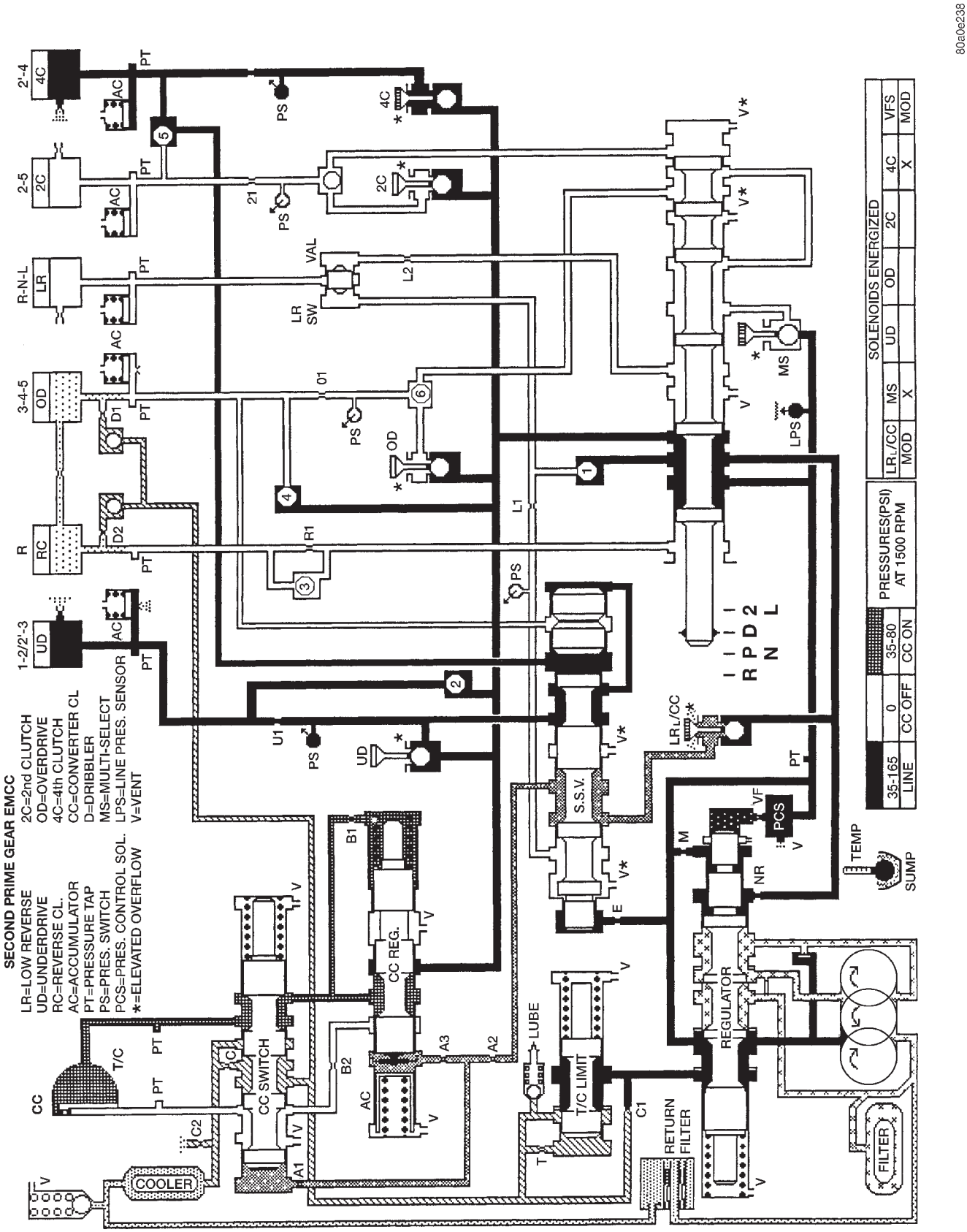

545RFE HYDRAULIC SCHEMATIC

SCHEMATICS AND DIAGRAMS (Continued)

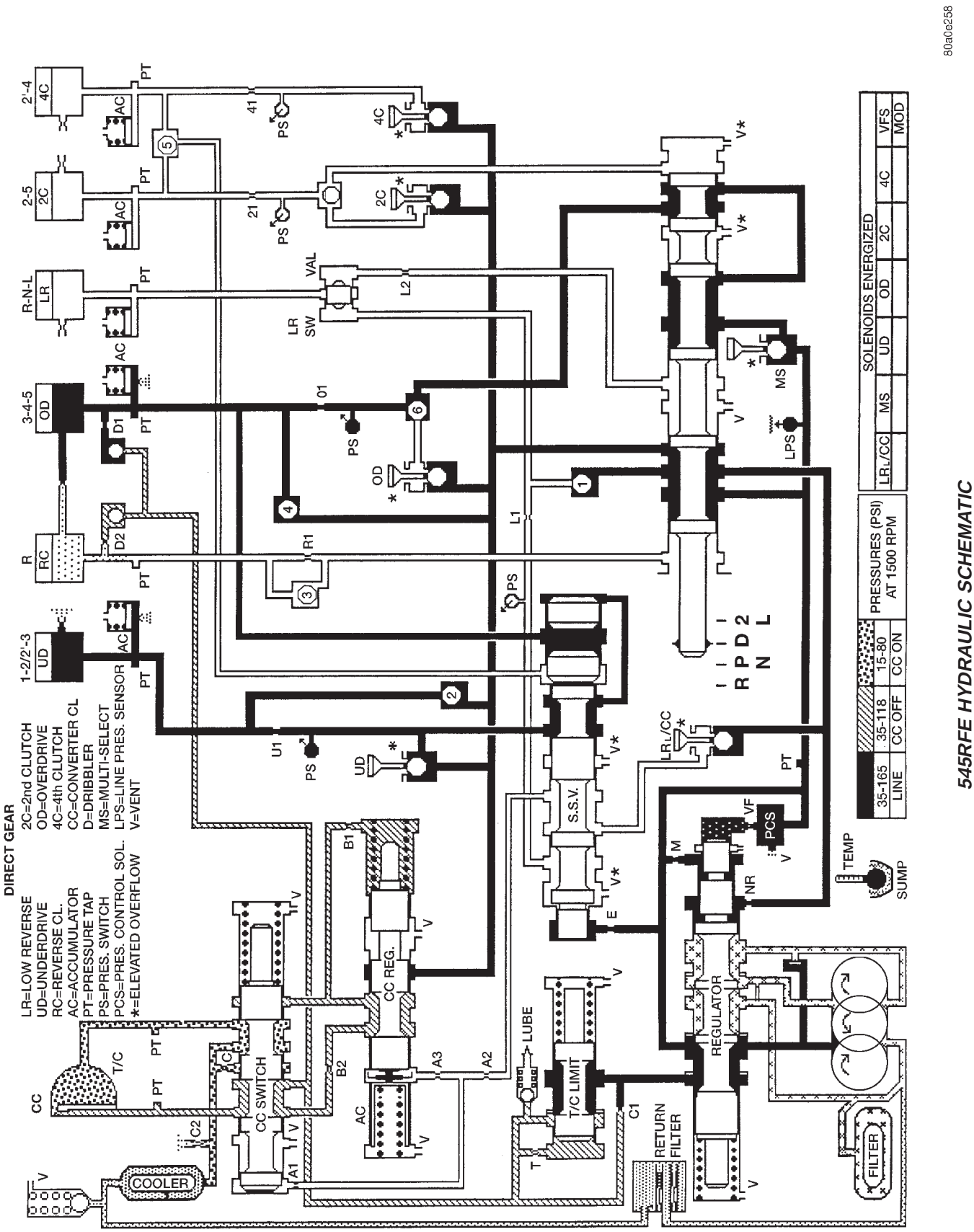

545RFE HYDRAULIC SCHEMATIC

SCHEMATICS AND DIAGRAMS (Continued)

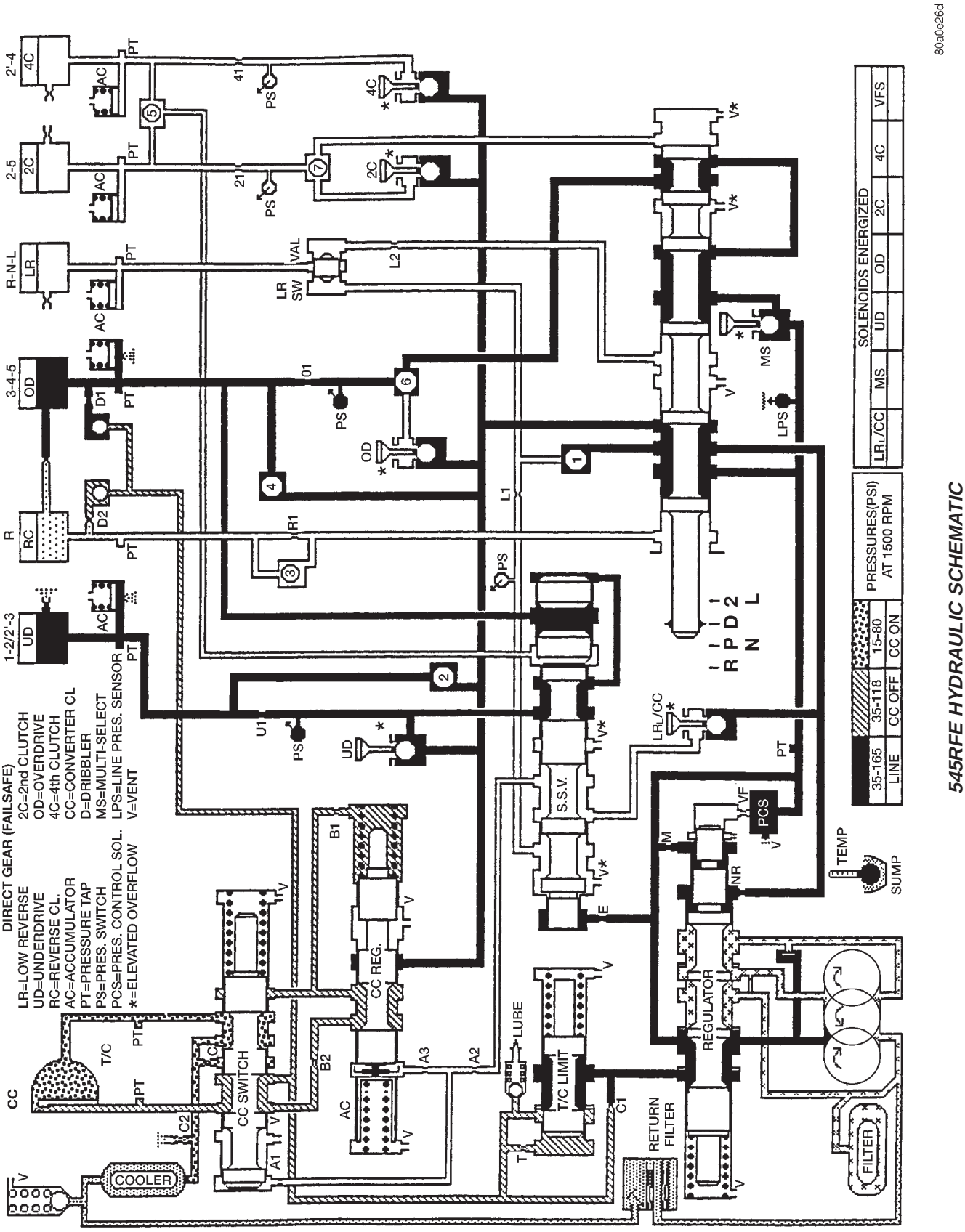

545RFE HYDRAULIC SCHEMATIC

SCHEMATICS AND DIAGRAMS (Continued)

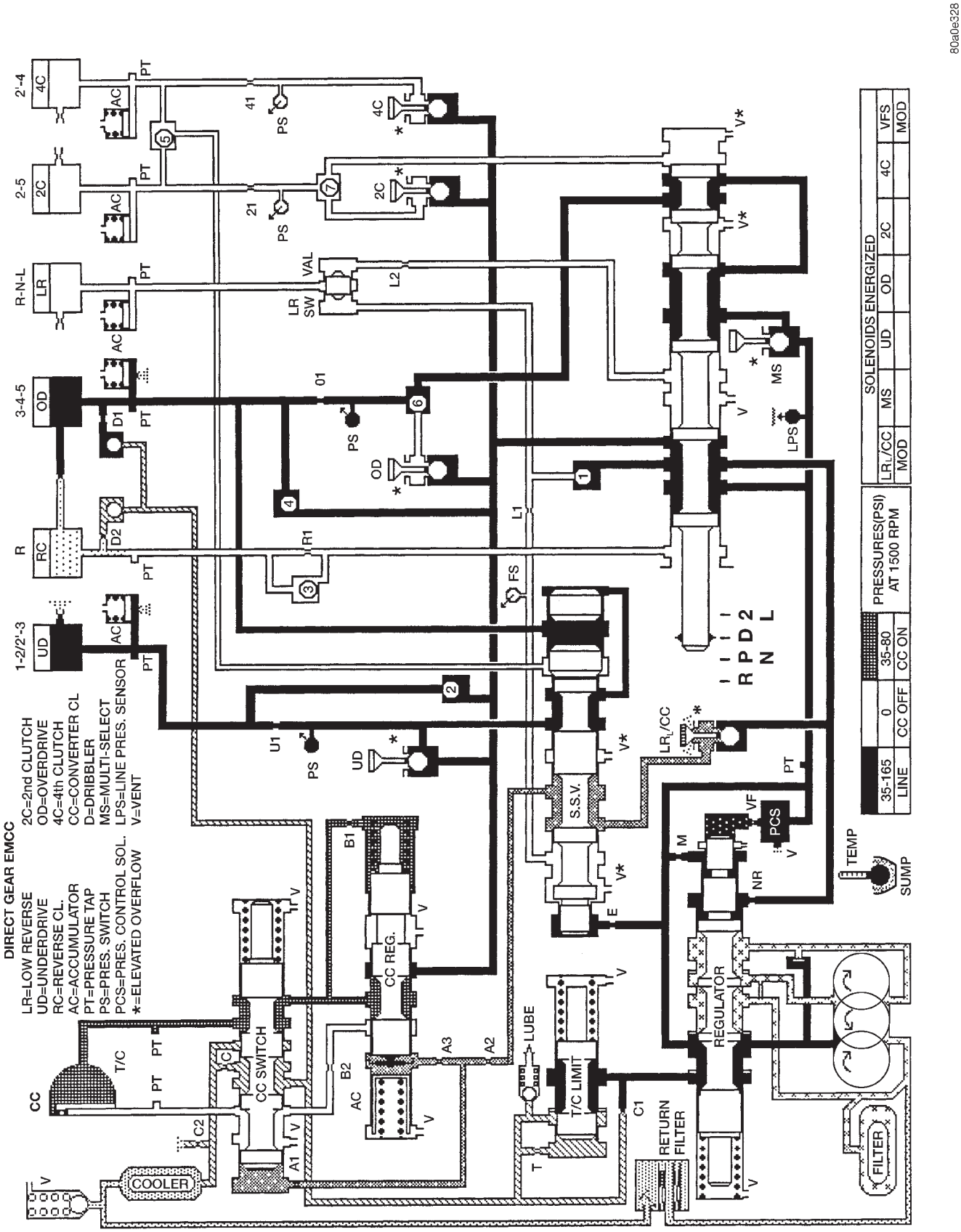

545RFE HYDRAULIC SCHEMATIC

SCHEMATICS AND DIAGRAMS (Continued)

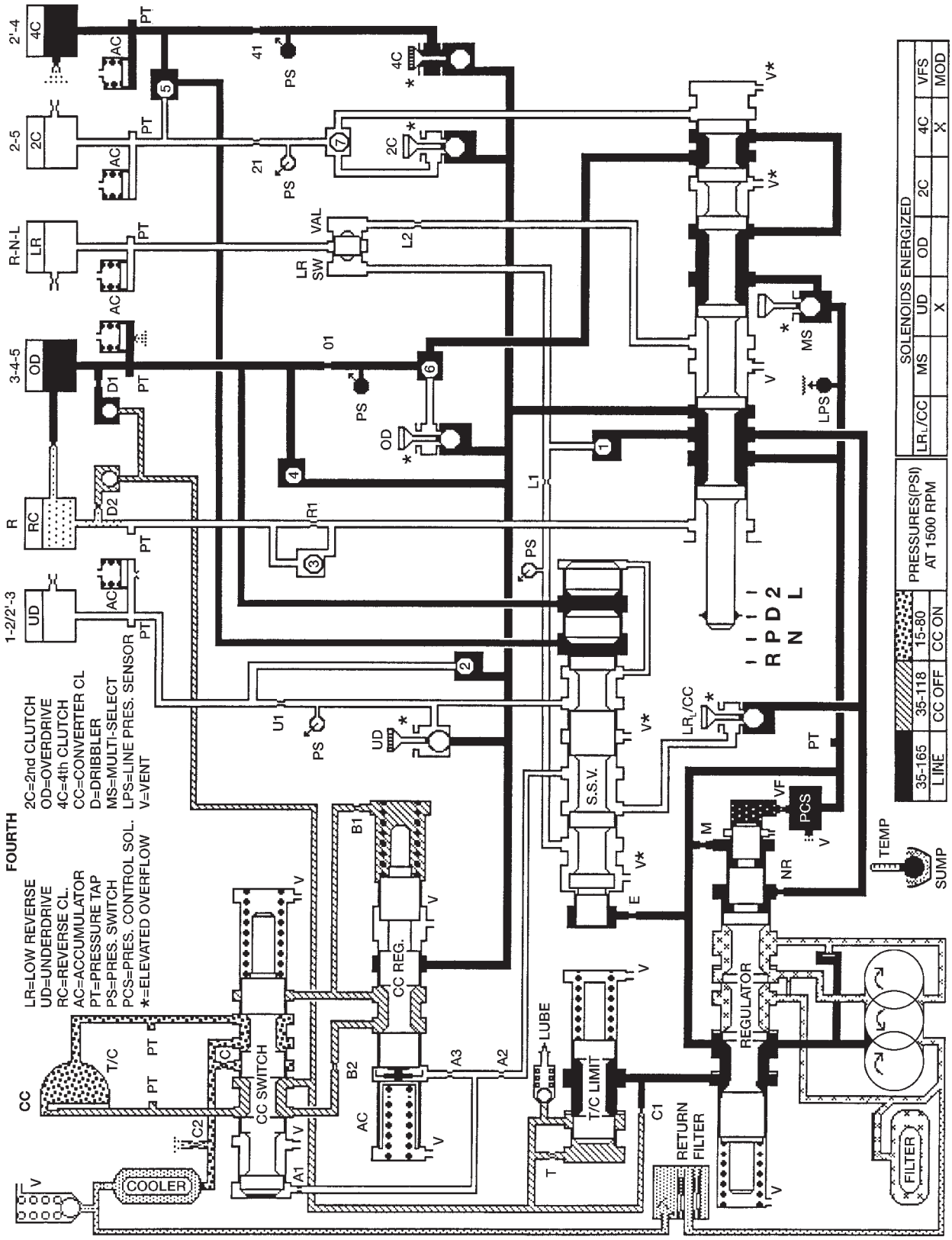

545RFE HYDRAULIC SCHEMATIC

SCHEMATICS AND DIAGRAMS (Continued)

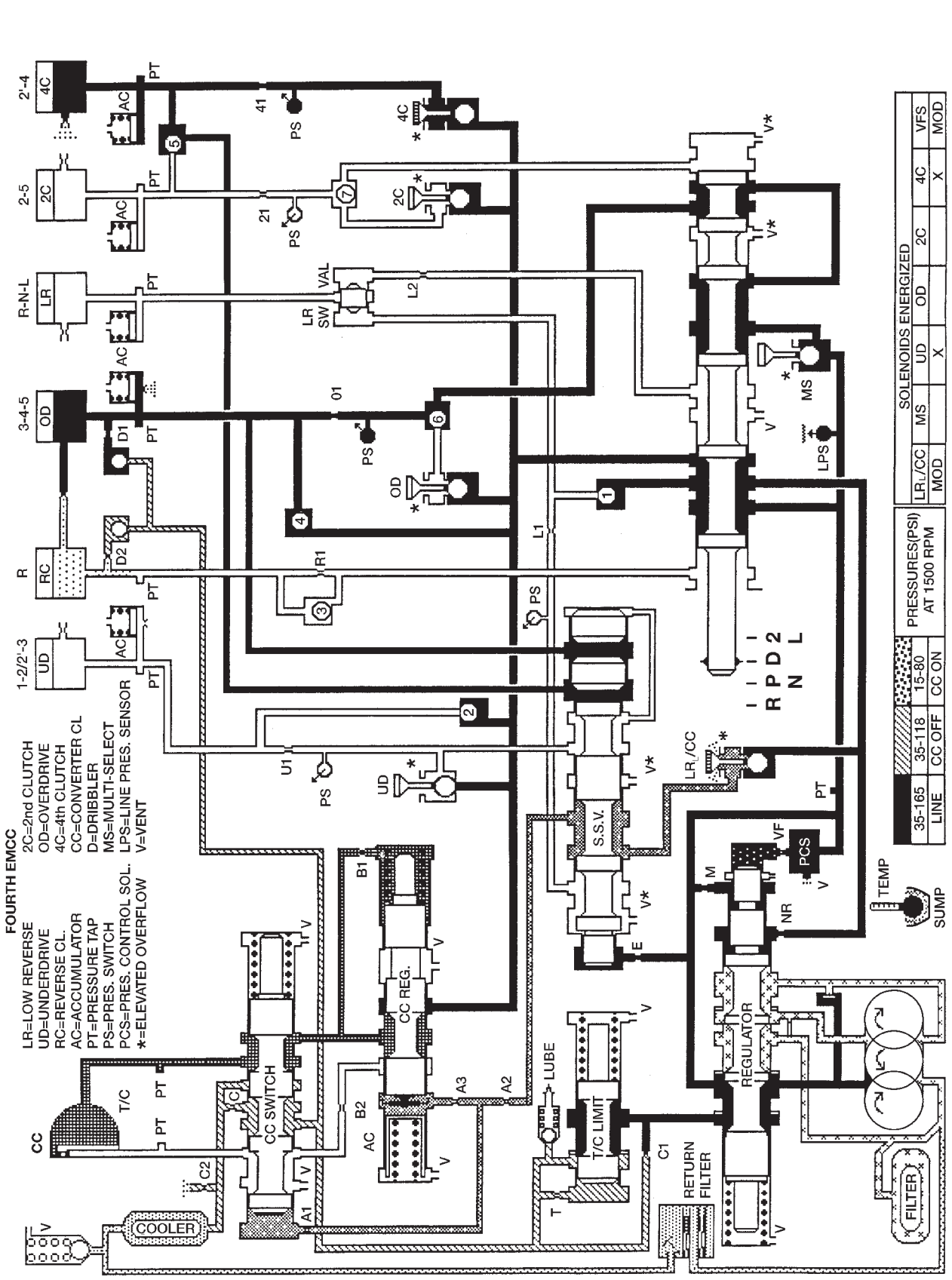

545RFE HYDRAULIC SCHEMATIC

SCHEMATICS AND DIAGRAMS (Continued)

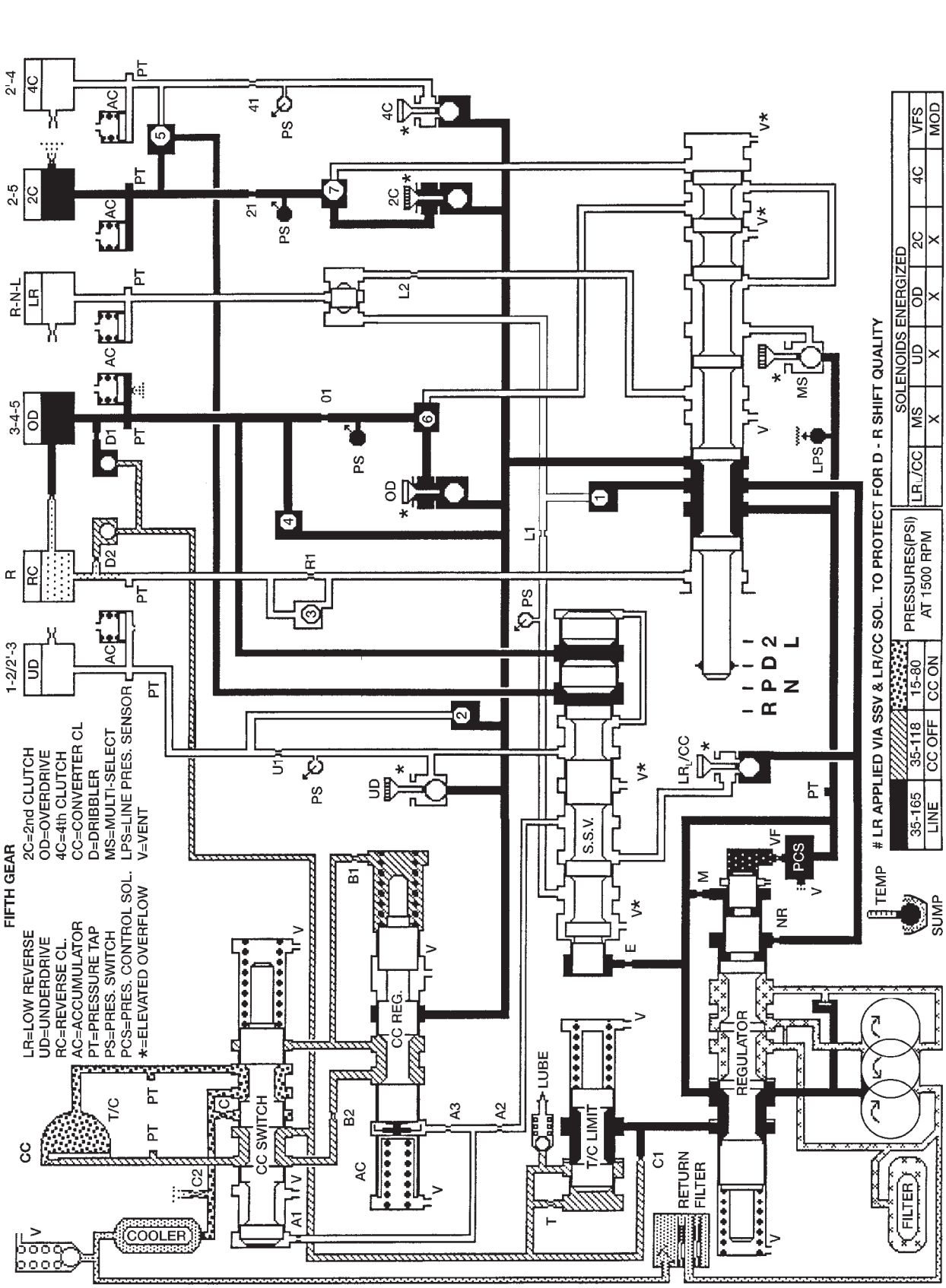

545RFE HYDRAULIC SCHEMATIC

SCHEMATICS AND DIAGRAMS (Continued)

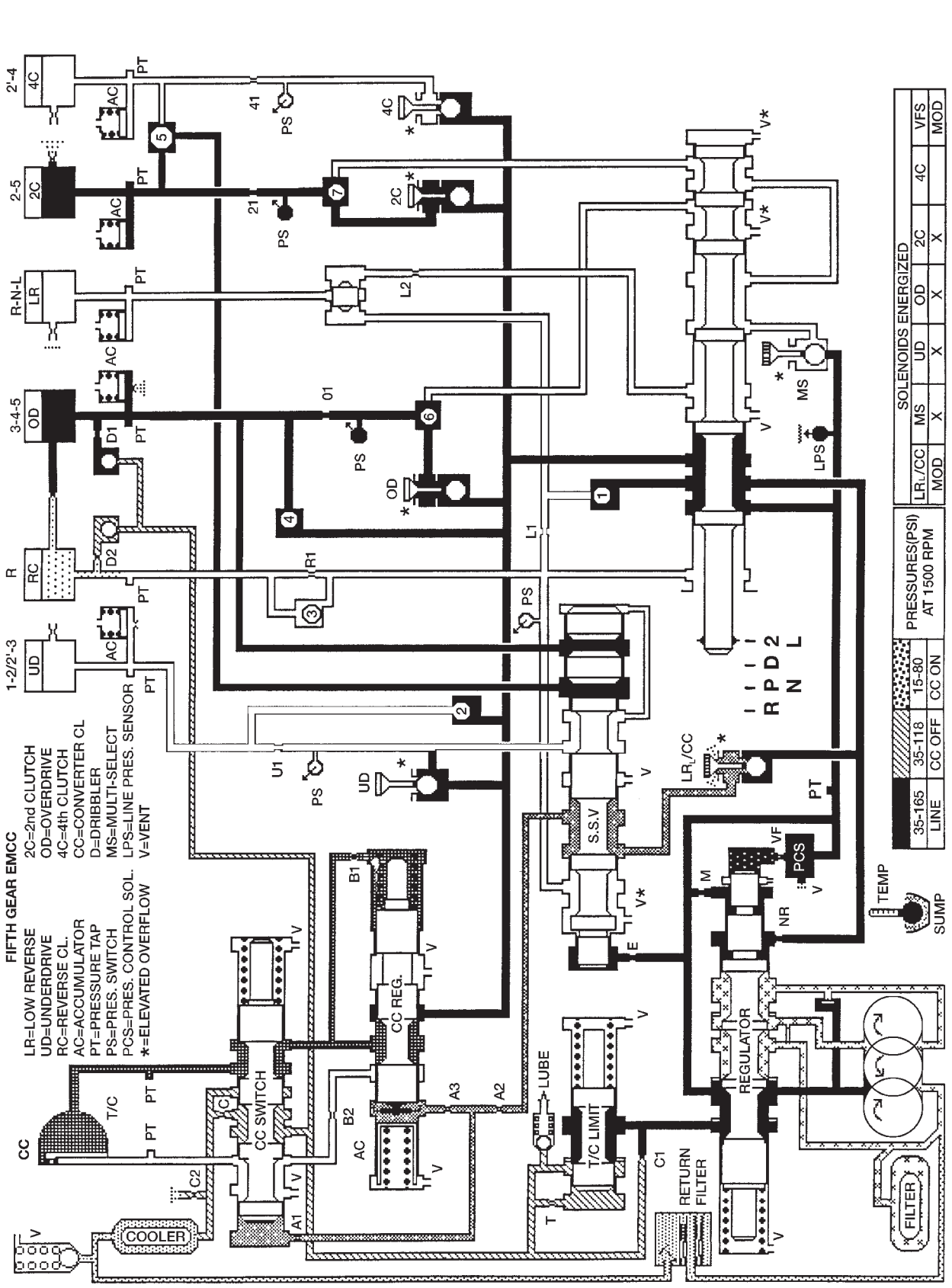

545RFE HYDRAULIC SCHEMATIC

SCHEMATICS AND DIAGRAMS (Continued)

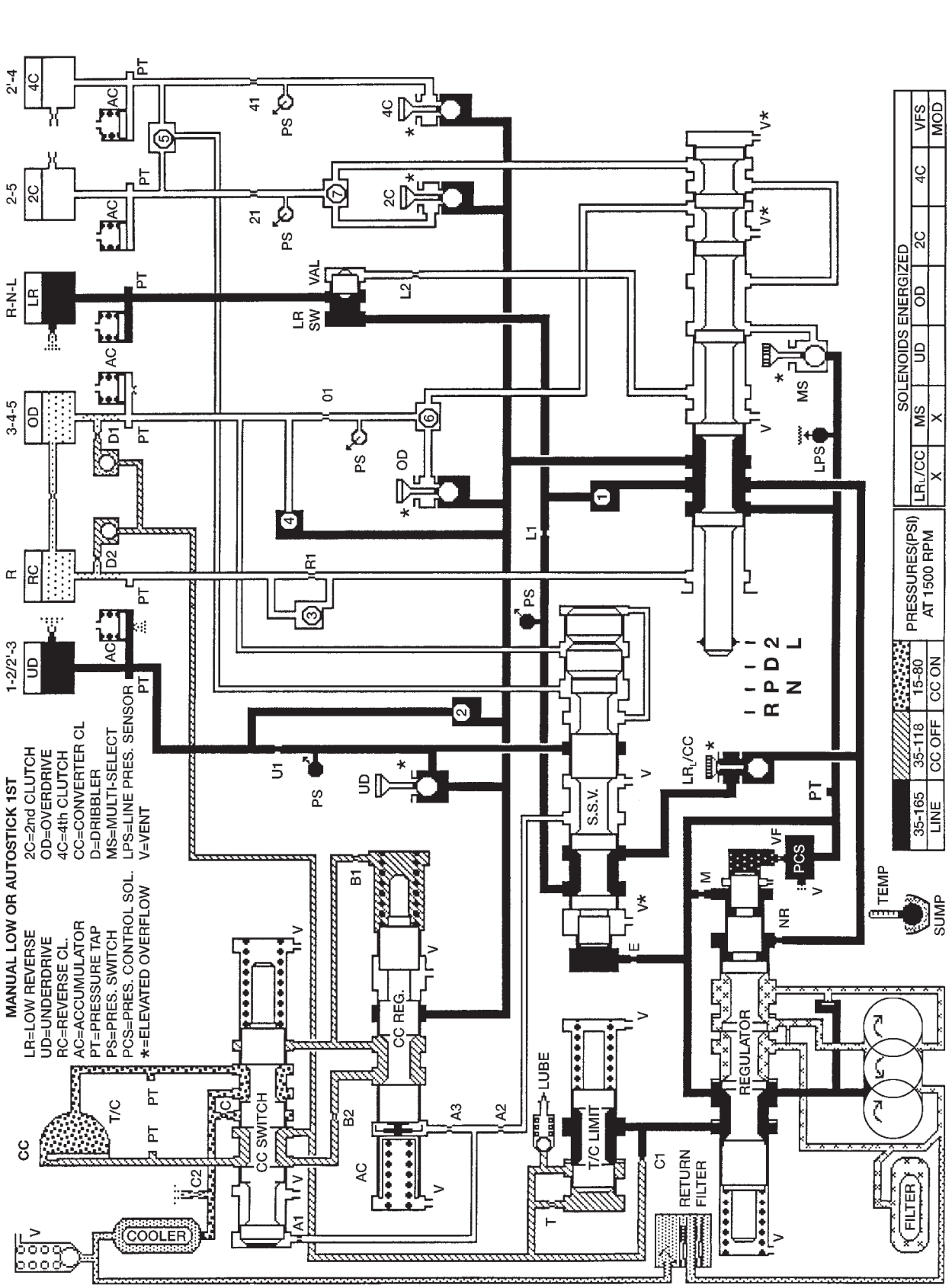

545RFE HYDRAULIC SCHEMATIC

SCHEMATICS AND DIAGRAMS (Continued)

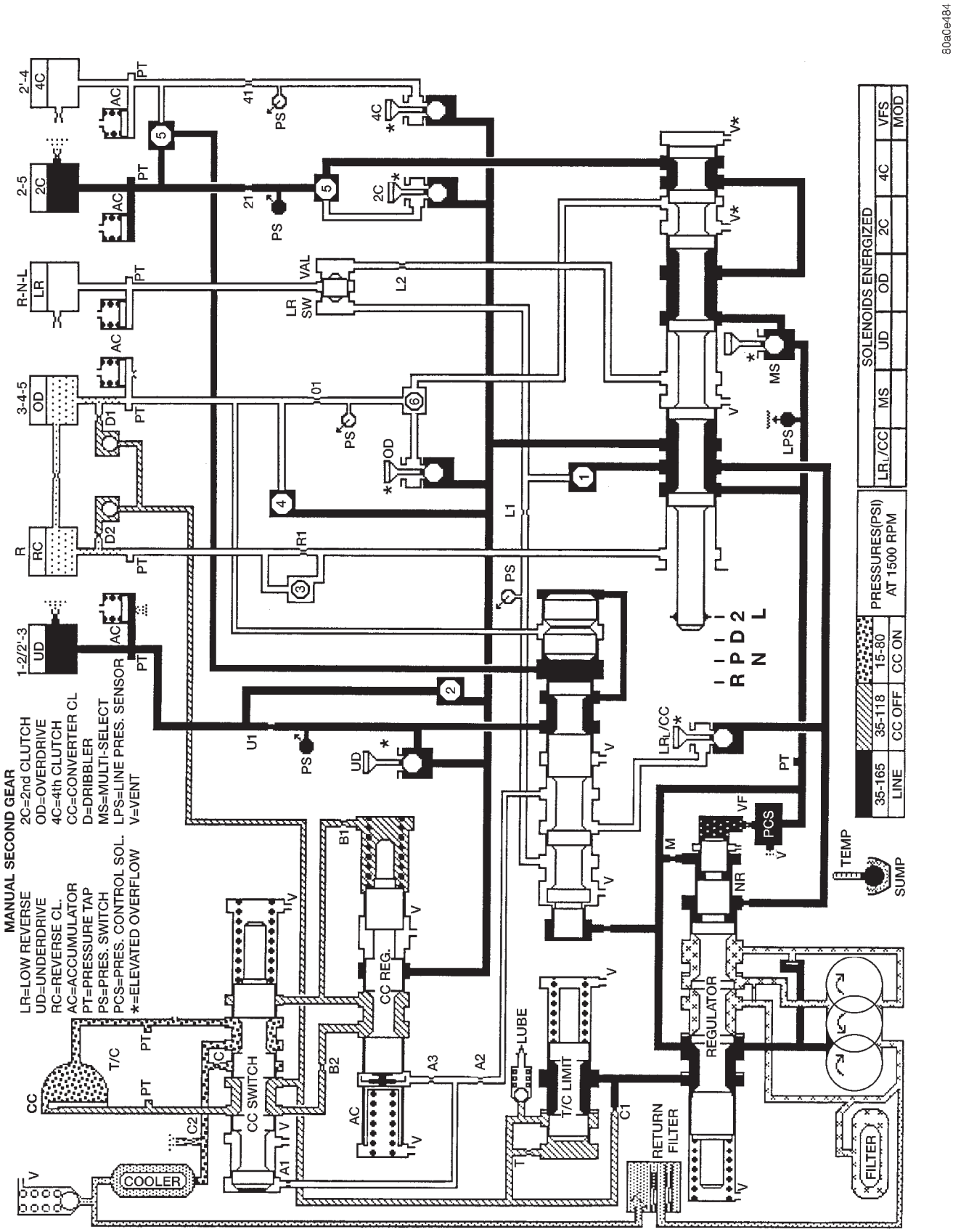

545RFE HYDRAULIC SCHEMATIC

SCHEMATICS AND DIAGRAMS (Continued)

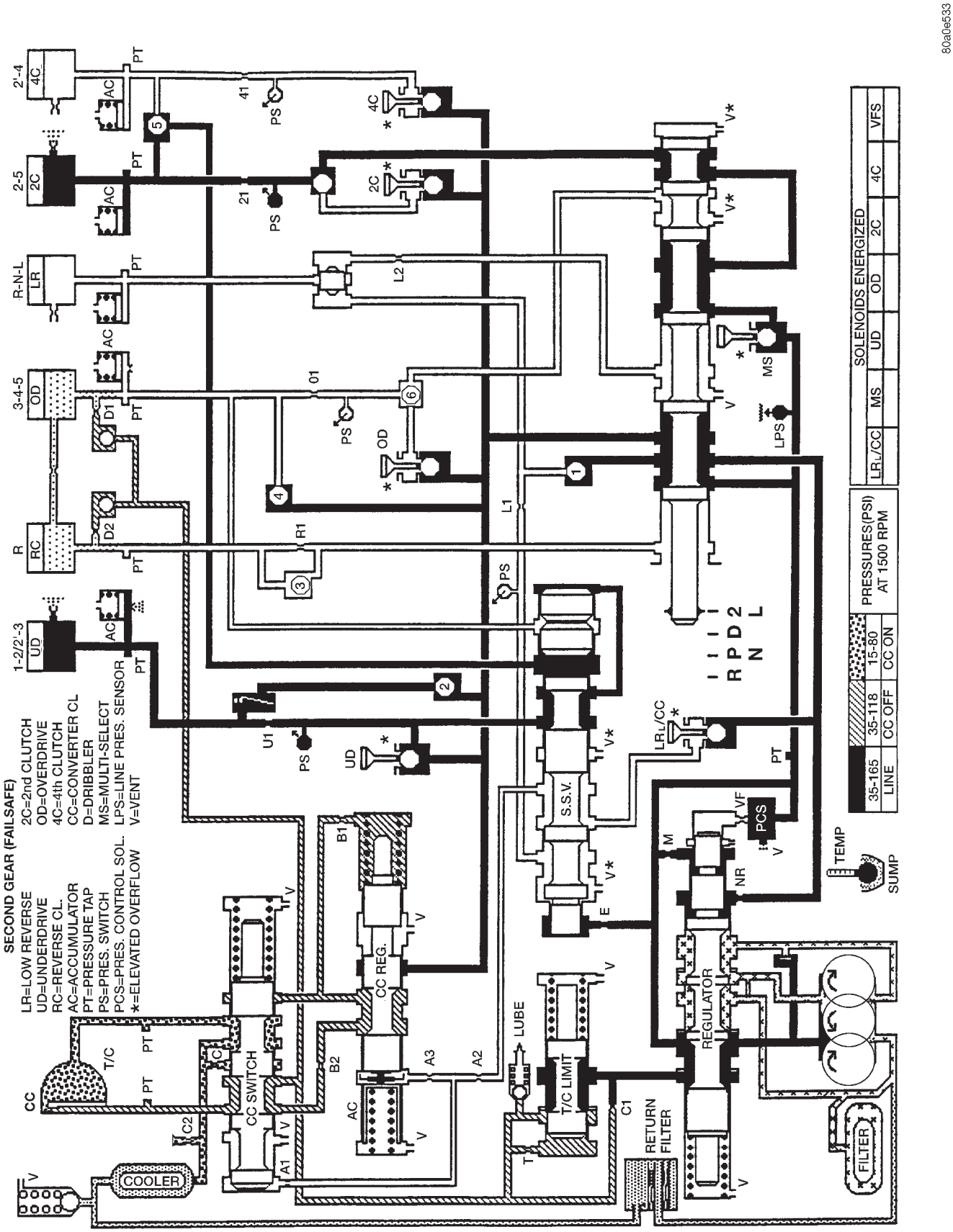

545RFE HYDRAULIC SCHEMATIC

SPECIFICATIONS

TRANSMISSION

GENERAL

Component	Metric	Inch
Output Shaft End Play	0.22-0.55 mm	0.009-0.021 in.
Input Shaft End Play	0.46-0.89 mm	0.018-0.035 in.
2C Clutch Pack Clearance	0.53-1.27 mm	0.021-0.050 in.
4C Clutch Pack Clearance	0.81-1.35 mm	0.032-0.053 in.
L/R Clutch Pack Clearance	1.14-1.91 mm	0.045-0.075 in.
OD Clutch Pack Clearance	1.016-1.65 mm	0.040-0.065 in.
UD Clutch Pack Clearance	0.76-1.160 mm	0.030-0.063 in.
Reverse Clutch Pack Clearance	0.81-1.24 mm	0.032-0.049 in.
Recommended fluid	Mopar® ATF +4, type 9602	

GEAR RATIOS

1ST	3.00:1
2ND	1.67:1
2ND Prime	1.50:1
3RD	1.0:1
4TH	0.75:1
5TH	0.67:1
REVERSE	3.00:1

TORQUE SPECIFICATIONS

DESCRIPTION	N·m	Ft. Lbs.	In. Lbs.
Fitting, cooler line at trans	17.5	-	155
Bolt, torque convertor	31	23	-
Bolt/nut, crossmember	68	50	-
Bolt, driveplate to crankshaft	75	55	-
Bolt, oil pan	11.8	-	105
Screw, primary fluid filter	4.5	-	40
Bolt, oil pump	28.2	-	250
Bolt, oil pump body to cover	4.5	-	40
Screw, plate to oil pump body	4.5	-	40
Bolt, valve body to case	11.8	-	105
Plug, pressure test port	5.1	-	45
Bolt, reaction shaft support	11.8	-	105
Screw, valve body to transfer plate	5.6	-	50
Screw, solenoid module to transfer plate	5.7	-	50
Screw, accumulator cover	4.5	-	40
Screw, detent spring	4.5	-	40
Bolt, input speed sensor	11.8	-	105
Bolt, output speed sensor	11.8	-	105
Bolt, line pressure sensor	11.8	-	105
Bolt, extension housing	54	40	-
Fitting, vent	12	-	100
Screw, manual valve cam retaining	2.5	-	40
Bolt, manual lever	28.2	-	250

SPECIAL TOOLS

RFE TRANSMISSION

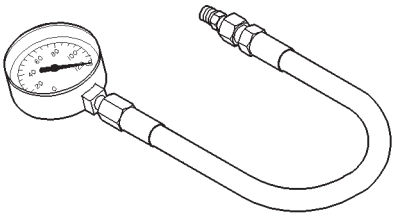

Gauge, Oil Pressure - C-3292

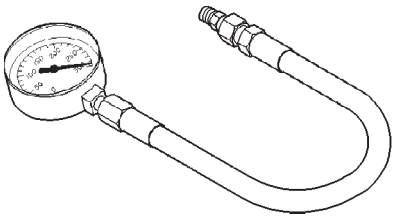

Gauge, Oil Pressure - C-3293SP

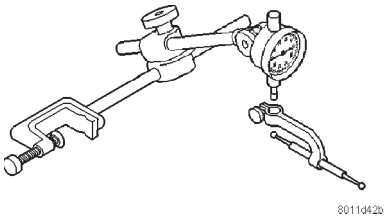

Dial Indicator - C-3339

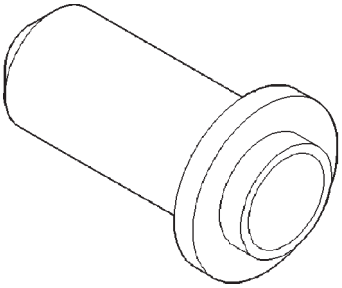

Installer, Seal - C-3860-A

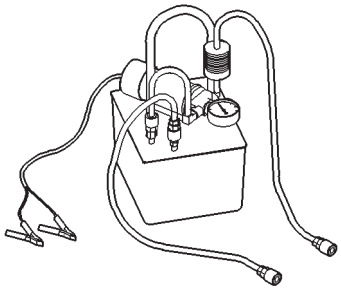

Flusher, Oil Cooler - 6906-C

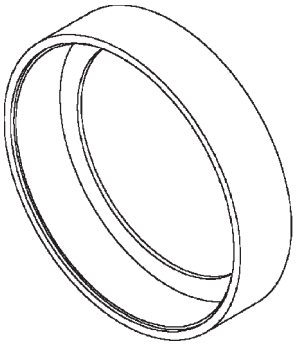

Compressor, Spring - 8249

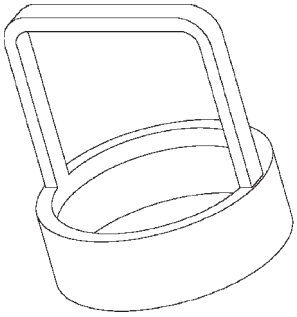

Compressor, Spring - 8250

SPECIAL TOOLS (Continued)

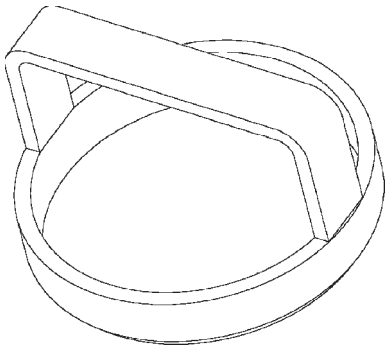

Compressor, Spring - 8251

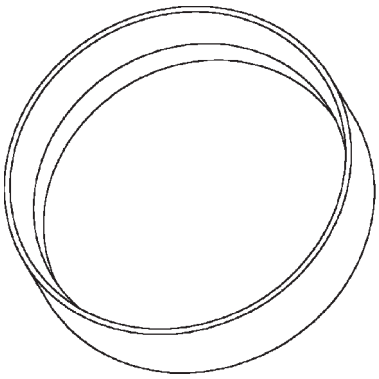

Installer, Piston - 8252

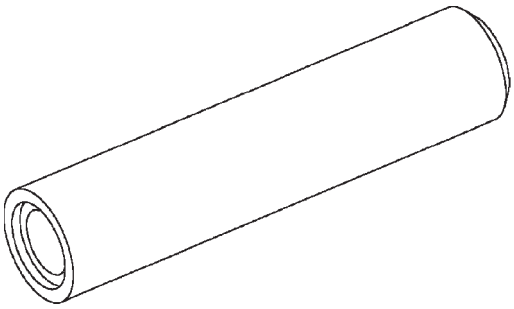

Installer, Seal - 8253

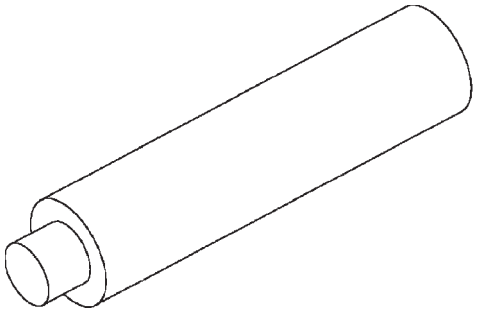

Installer, Seal - 8254

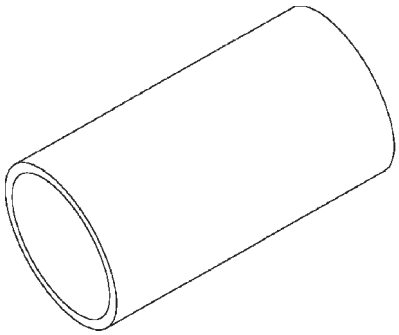

Installer, Snap-ring - 8255

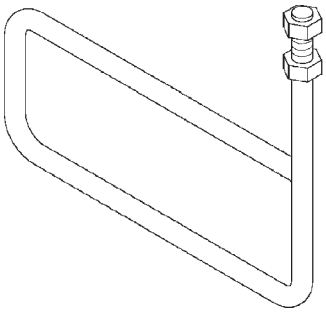

Stand, Support - 8257

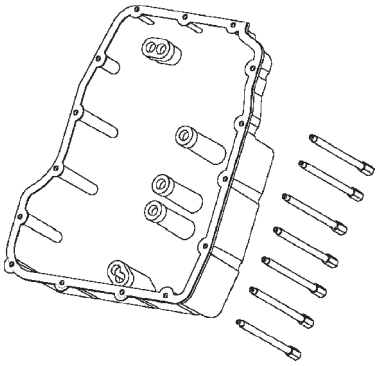

Adapter, Pressure Tap - 8258-A

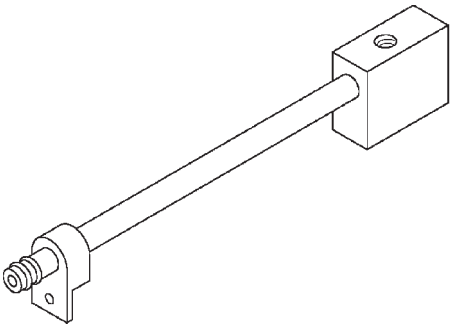

Adapter, Line Pressure - 8259

SPECIAL TOOLS (Continued)

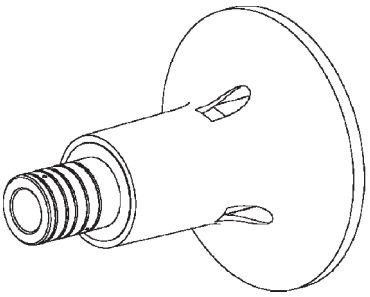

Fixture, Input Clutch Pressure - 8260

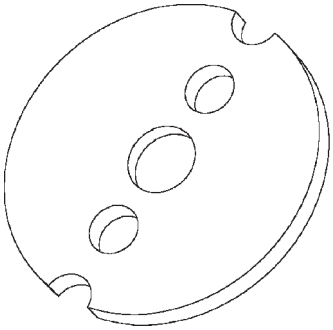

Plate, Alignment - 8261

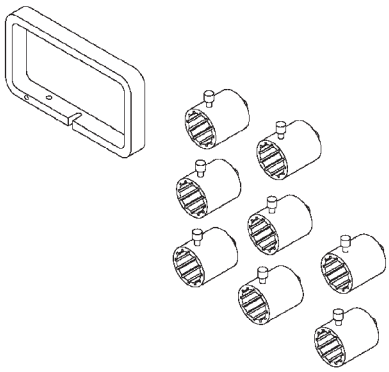

End Play Set - 8266

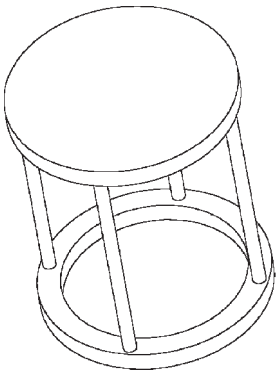

Compressor, Spring - 8285

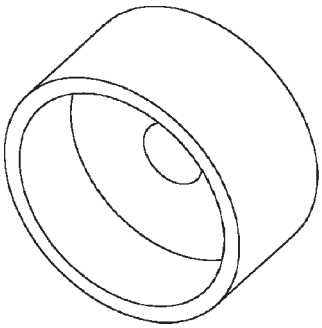

Installer, Bearing - 8320

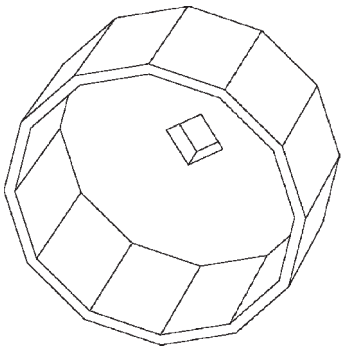

Wrench, Filter - 8321

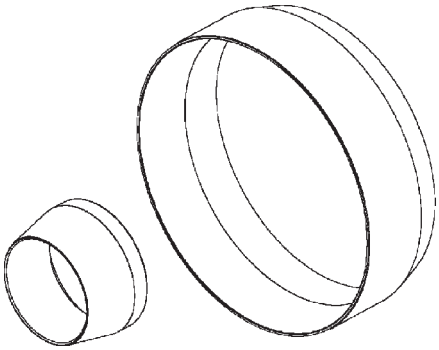

Installer, Piston - 8504

4C RETAINER/BULKHEAD

DISASSEMBLY

(1) Remove the 2C piston belleville spring snap-ring from the 4C retainer /bulkhead (Fig. 53).

(2) Remove the 2C piston Belleville spring from the retainer/bulkhead (Fig. 53).

(3) Remove the 2C piston from the retainer/bulkhead. Use 20 psi of air pressure to remove the piston if necessary.

(4) Remove the 4C clutch snap-ring from the retainer/bulkhead (Fig. 53).

(5) Remove the 4C clutch pack from the retainer/bulkhead (Fig. 53).

(6) Using Spring Compressor 8250 and a suitable shop press, compress the 4C piston return spring and remove the snap-ring (Fig. 53).

(7) Remove the 4C piston return spring and piston from the retainer/bulkhead (Fig. 53). Use 20 psi of air pressure to remove the piston if necessary.

ASSEMBLY

(1) Clean and inspect all components. Replace any components which show evidence of excessive wear or scoring.

(2) Install new seals on the 2C and 4C pistons (Fig. 53).

(3) Lubricate all seals with Mopar® ATF +4, type 9602 prior to installation.

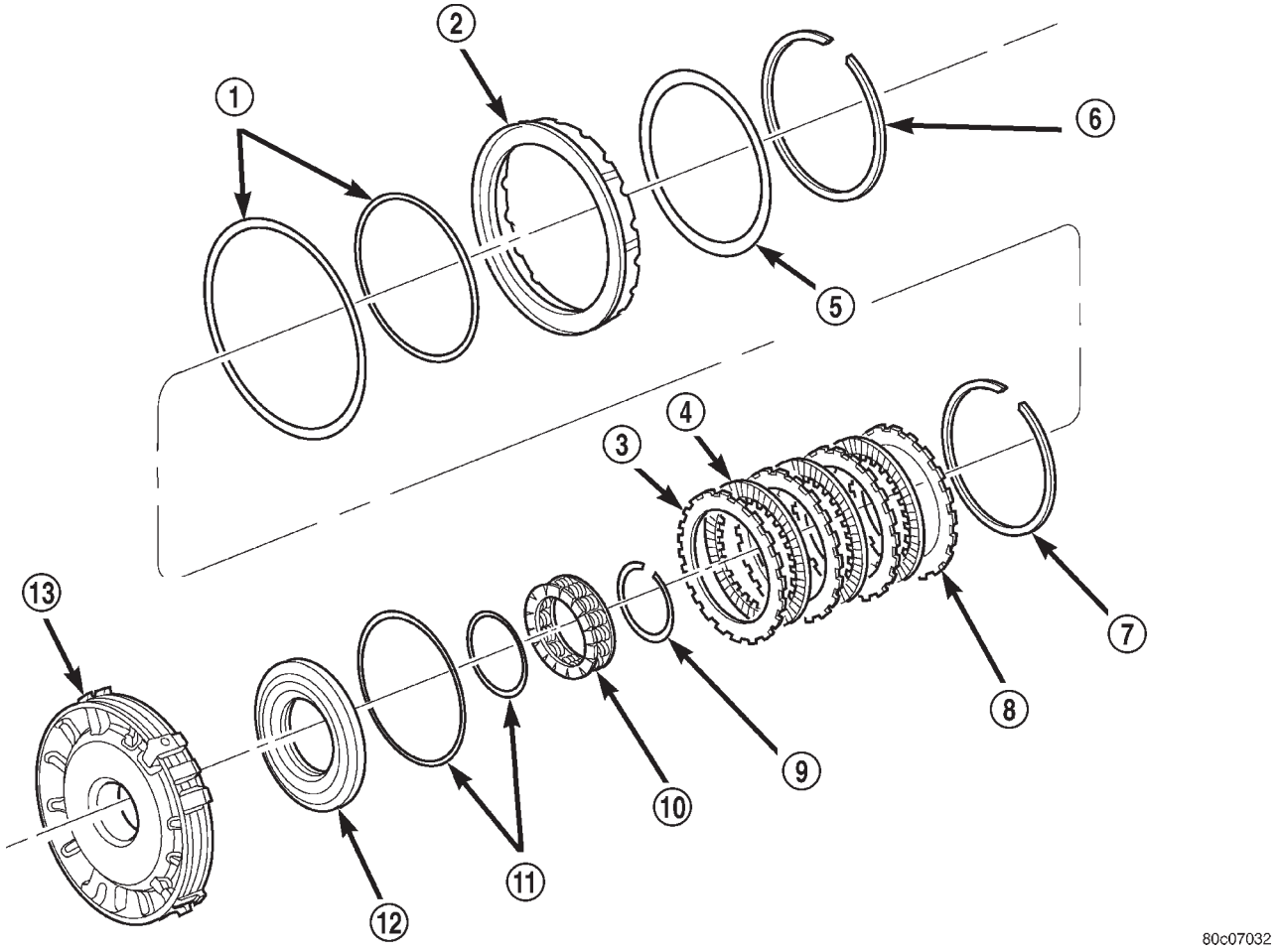

Fig. 53 4C Retainer/Bulkhead Components

1 - SEAL
2 - 2C PISTON
3 - PLATE
4 - DISC
5 - 2C BELLEVILLE SPRING
6 - SNAP-RING
7 - SNAP-RING (SELECT)
8 - REACTION PLATE
9 - SNAP-RING
10 - RETURN SPRING
11 - SEAL
12 - 4C PISTON
13 - 4C RETAINER/BULKHEAD

4C RETAINER/BULKHEAD (Continued)

(4) Install the 4C piston into the 4C retainer/bulkhead (Fig. 53).

(5) Position the 4C piston return spring onto the 4C piston.

(6) Using Spring Compressor 8250 and a suitable shop press, compress the 4C piston return spring and install the snap-ring (Fig. 54).

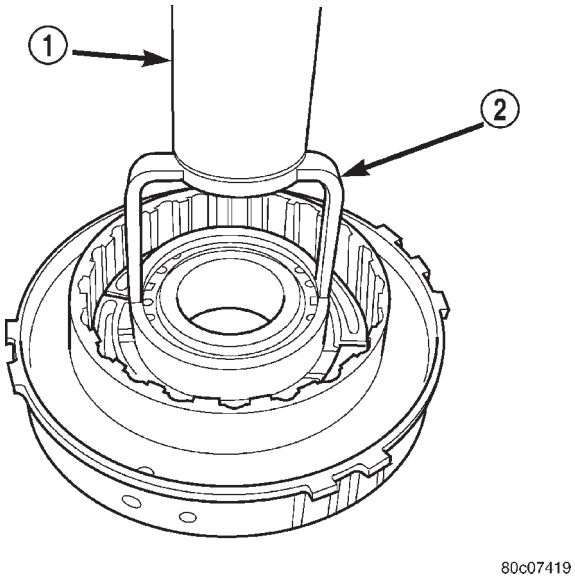

Fig. 54 Compress 4C Piston Return Spring Using Tool 8250

1 - PRESS
2 - TOOL 8250

(7) Assemble and install the 4C clutch pack into the retainer/bulkhead (Fig. 53).

(8) Install the 4C reaction plate and snap-ring into the retainer/bulkhead (Fig. 53). The 4C reaction plate is non-directional.

(9) Measure the 4C clutch clearance. The correct clutch clearance is 0.81-1.35 mm (0.032-0.053 in.). The snap-ring is selectable. Install the chosen snap-ring and re-measure to verify the selection.

(10) Install the 2C piston into the retainer/bulkhead (Fig. 53).

(11) Position the 2C Belleville spring onto the 2C piston.

(12) Position the 2C Belleville spring snap-ring onto the 2C Belleville spring (Fig. 53).

(13) Using Spring Compressor 8249 and a suitable shop press (Fig. 55), compress the belleville spring until the snap-ring is engaged with the snap-ring groove in the retainer/bulkhead.

ADAPTER HOUSING SEAL

REMOVAL

(1) Remove the transfer case from the transmission.

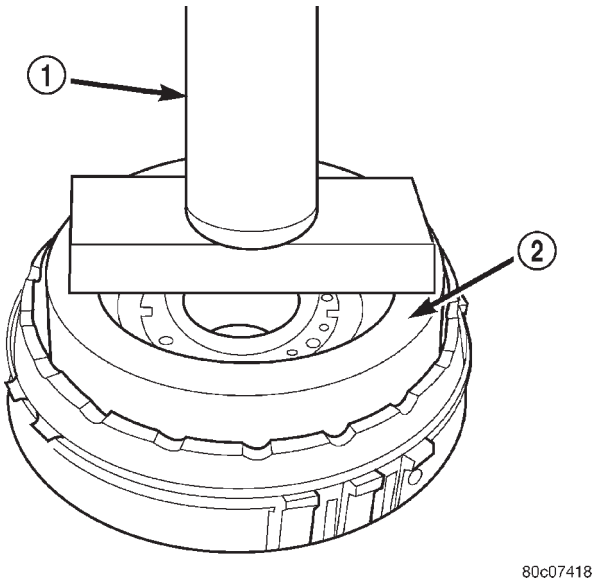

Fig. 55 Compress 2C Belleville Spring Using Tool 8249

1 - PRESS
2 - TOOL 8249

(2) Using a screw mounted on a slide hammer, remove the adapter housing seal.

INSTALLATION

(1) Clean the adapter seal bore in the adapter housing of any residue or particles remaining from the original seal.

(2) Install new oil seal in the adapter housing using Seal Installer C-3860-A (Fig. 56).

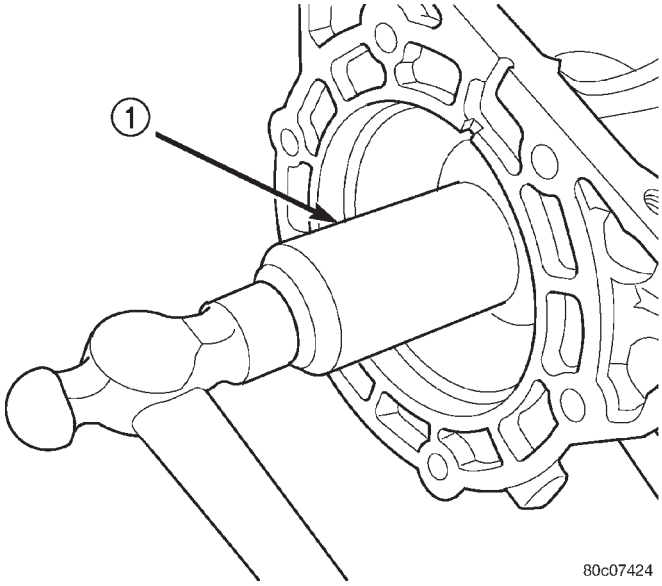

Fig. 56 Adapter Housing Seal Installation

1 - TOOL C-3860-A

(3) Install the transfer case onto the transmission.

BRAKE TRANSMISSION SHIFT INTERLOCK MECHANISM

DESCRIPTION

The Brake Transmission Shifter/Ignition Interlock (BTSI), is a cable and solenoid operated system. It interconnects the automatic transmission floor mounted shifter to the steering column ignition switch (Fig. 57).

OPERATION

The system locks the shifter into the PARK position. The interlock system is engaged whenever the ignition switch is in the LOCK or ACCESSORY position. An additional electrically activated feature will prevent shifting out of the PARK position unless the brake pedal is depressed approximately one-half an inch. A magnetic holding device in line with the park lock cable is energized when the ignition is in the RUN position. When the key is in the RUN position and the brake pedal is depressed, the shifter is unlocked and will move into any position. The interlock system also prevents the ignition switch from being turned to the LOCK or ACCESSORY position, unless the shifter is fully locked into the PARK position.

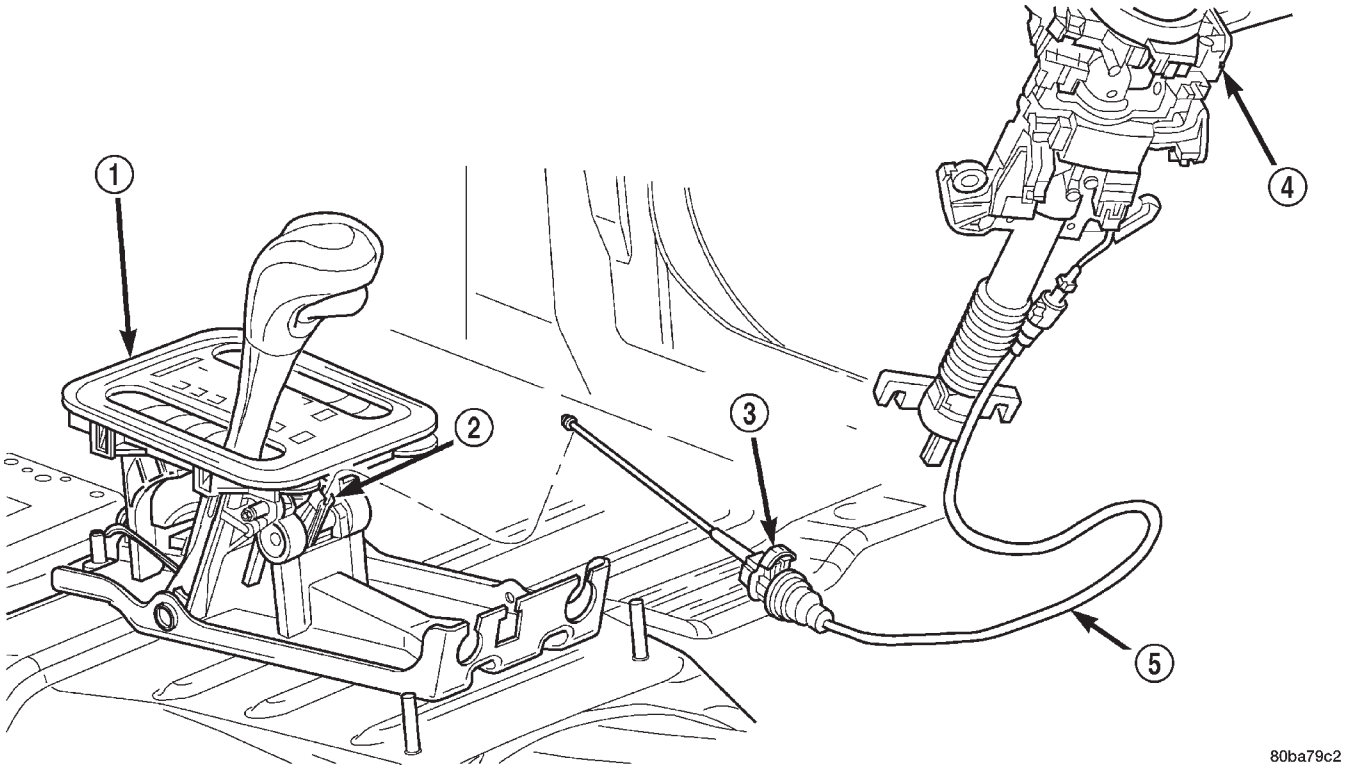

Fig. 57 Ignition Interlock Cable

1 - SHIFT MECHANISM
2 - SHIFTER BTSI LEVER
3 - ADJUSTMENT CLIP
4 - STEERING COLUMN ASSEMBLY
5 - INTERLOCK CABLE

BRAKE TRANSMISSION SHIFT INTERLOCK MECHANISM (Continued)

DIAGNOSIS AND TESTING - BRAKE TRANSMISSION SHIFT INTERLOCK

(1) Verify that the key can only be removed in the PARK position

(2) When the shift lever is in PARK And the shift handle pushbutton is in the “OUT” position, the ignition key cylinder should rotate freely from OFF to LOCK. When the shifter is in any other gear or neutral position, the ignition key cylinder should not rotate to the LOCK position.

(3) Shifting out of PARK should be possible when the ignition key cylinder is in the OFF position.

(4) Shifting out of PARK should not be possible while applying normal pushbutton force and ignition key cylinder is in the RUN or START positions unless the foot brake pedal is depressed approximately 1/2 inch (12mm).

(5) Shifting out of PARK should not be possible when the ignition key cylinder is in the ACCESSORY or LOCK positions.

(6) Shifting between any gears, NEUTRAL or into PARK may be done without depressing foot brake pedal with ignition switch in RUN or START positions.

REMOVAL

(1) Lower the steering column.

(2) Disconnect the brake transmission shift interlock (BTSI) cable solenoid electrical connector (Fig. 58).

(3) With the ignition switch in the “RUN” position depress the BTSI cable locking tab, located on top of the cable connector (Fig. 58) at the steering column and pull the BTSI cable straight out.

(4) Disengage the wire connector at the solenoid on the cable

(5) Remove the transmission shift interlock cable from steering column (Fig. 59).

(6) Remove the floor console and related trim. (Refer to 23 - BODY/INTERIOR/FLOOR CONSOLE - REMOVAL)

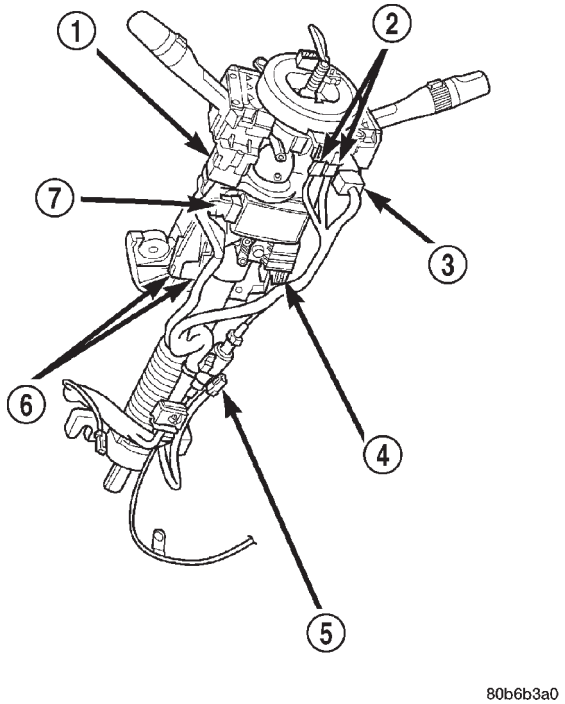

Fig. 58 BTSI Solenoid Connector Location

1 - LEFT MULTIFUNCTION SWITCH CONNECTOR
2 - LOWER CLOCKSPRING CONNECTORS
3 - RIGHT MULTIFUNCTION SWITCH CONNECTOR
4 - SHIFTER INTERLOCK CABLE CONNECTOR
5 - SHIFTER INTERLOCK SOLENOID CONNECTOR
6 - IGNITION SWITCH CONNECTOR RECEPTACLES
7 - SKIM CONNECTOR

(7) Disconnect the BTSI cable from the shift BTSI lever and remove the cable from the shifter assembly bracket.

(8) Release the BTSI cable from any remaining clips.

(9) Remove BTSI cable from the vehicle.

BRAKE TRANSMISSION SHIFT INTERLOCK MECHANISM (Continued)

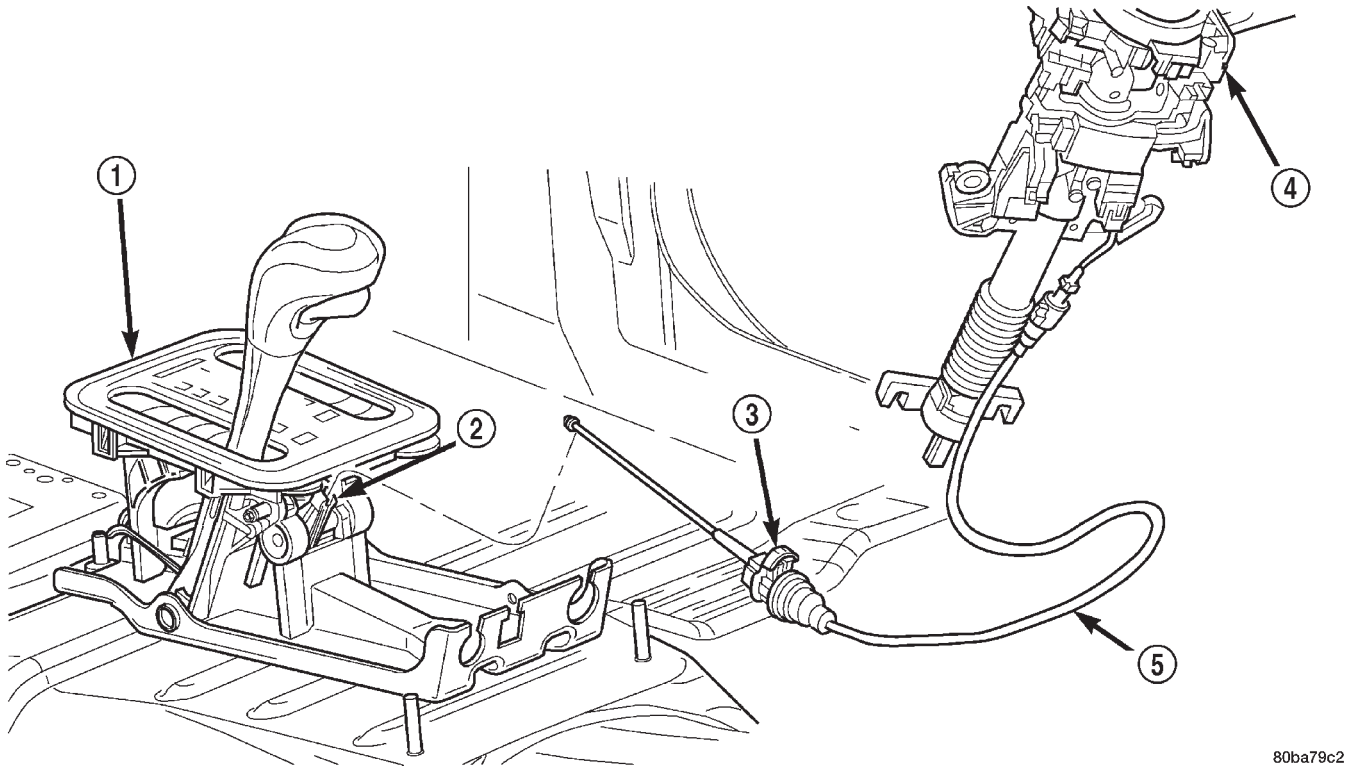

Fig. 59 Brake Transmission Shift Interlock

1 - SHIFT MECHANISM
2 - SHIFTER BTSI LEVER
3 - ADJUSTMENT CLIP
4 - STEERING COLUMN ASSEMBLY
5 - INTERLOCK CABLE

INSTALLATION

NOTE: The gearshift cable must be secured into position and properly adjusted before the installation of the Brake Transmission Interlock Cable (BTSI).

(1) Push the BTSI cable straight into the square mounting hole in the steering column until cable snaps in place (Fig. 60).

(2) Snap BTSI cable solenoid tie strap into hole in steering column tube.

(3) Engage the wiring connector from brake light switch into BTSI cable solenoid housing.

(4) Route BTSI cable to the shifter mechanism.

(5) Install the BTSI cable end fitting into shifter BTSI lever.

(6) Snap BTSI cable adjuster ears into floor shifter bracket and

(7) Place the ignition key cylinder in the LOCK position.

(8) Push the cable adjuster lock clamp downward to lock it.

(9) Test the BTSI cable operation.

(10) Install the floor console and related trim. (Refer to 23 - BODY/INTERIOR/FLOOR CONSOLE - INSTALLATION)

ADJUSTMENTS - BRAKE TRANSMISSION SHIFT INTERLOCK

The park interlock cable is part of the brake/shift lever interlock system. Correct cable adjustment is important to proper interlock operation. The gear shift and park lock cables must both be correctly adjusted in order to shift out of PARK.

ADJUSTMENT PROCEDURE

(1) Remove floor console as necessary for access to the brake transmission shift interlock cable. (Refer to 23 - BODY/INTERIOR/FLOOR CONSOLE - REMOVAL)

(2) Shift the transmission into the PARK position.

(3) Turn ignition switch to LOCK position. **Be sure ignition key cylinder is in the LOCK position. Cable will not adjust correctly in any other position.**

(4) Pull cable lock button up to release cable (Fig. 61).

(5) Ensure that the cable is free to self-adjust by pushing cable rearward and releasing.

BRAKE TRANSMISSION SHIFT INTERLOCK MECHANISM (Continued)

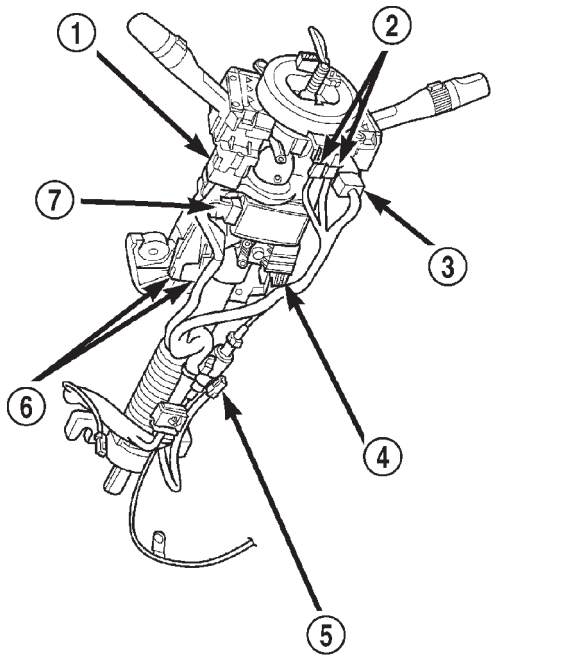

80b6b3a0

Fig. 60 BTSI Solenoid Connector Location

1 - LEFT MULTIFUNCTION SWITCH CONNECTOR
2 - LOWER CLOCKSPRING CONNECTORS
3 - RIGHT MULTIFUNCTION SWITCH CONNECTOR
4 - SHIFTER INTERLOCK CABLE CONNECTOR
5 - SHIFTER INTERLOCK SOLENOID CONNECTOR
6 - IGNITION SWITCH CONNECTOR RECEPTACLES
7 - SKIM CONNECTOR

(6) Push lock button down until it snaps in place.

BTSI FUNCTION CHECK

(1) Verify removal of ignition key allowed in PARK position only.

(2) When the shift lever is in PARK, and the shift handle push-button is in the out position, the ignition key cylinder should rotate freely from off to lock. When the shifter is in any other position, the ignition key should not rotate from off to lock.

(3) Shifting out of PARK should be possible when the ignition key cylinder is in the off position.

(4) Shifting out of PARK should not be possible while applying normal push-button force, and ignition key cylinder is in the run or start positions, unless the foot brake pedal is depressed approximately 1/2 inch (12mm).

(5) Shifting out of PARK should not be possible when the ignition key cylinder is in the accessory or lock position.

(6) Shifting between any gear and NEUTRAL, or PARK, may be done without depressing foot brake with ignition switch in run or start positions.

(7) The floor shifter lever and gate positions should be in alignment with all transmission detent positions.

(8) Engine starts must be possible with shifter lever in PARK or NEUTRAL gate positions only. Engine starts must not be possible in any other gate positions other than PARK or NEUTRAL.

(9) With shifter lever handle push-button not depressed and lever detent in:

- PARK position- apply forward force on center of handle and remove pressure. Engine start must be possible.
- PARK position- apply rearward force on center of handle and remove pressure. Engine start must be possible.
- NEUTRAL position- engine start must be possible.
- NEUTRAL position, engine running and brakes applied- Apply forward force on center of shift handle. Transmission should not be able to shift into REVERSE detent.

FLUID AND FILTER

DIAGNOSIS AND TESTING - EFFECTS OF INCORRECT FLUID LEVEL

A low fluid level allows the pump to take in air along with the fluid. Air in the fluid will cause fluid pressures to be low and develop slower than normal. If the transmission is overfilled, the gears churn the fluid into foam. This aerates the fluid and causing the same conditions occurring with a low level. In either case, air bubbles cause fluid overheating, oxidation and varnish buildup which interferes with valve, clutch and servo operation. Foaming also causes fluid expansion which can result in fluid overflow from the transmission vent or fill tube. Fluid overflow can easily be mistaken for a leak if inspection is not careful.

DIAGNOSIS AND TESTING - CAUSES OF BURNT FLUID

Burnt, discolored fluid is a result of overheating which has two primary causes.

(1) A result of restricted fluid flow through the main and/or auxiliary cooler. This condition is usually the result of a faulty or improperly installed drainback valve, a damaged main cooler, or severe restrictions in the coolers and lines caused by debris or kinked lines.

(2) Heavy duty operation with a vehicle not properly equipped for this type of operation. Trailer towing or similar high load operation will overheat the transmission fluid if the vehicle is improperly equipped. Such vehicles should have an auxiliary transmission fluid cooler, a heavy duty cooling sys-

FLUID AND FILTER (Continued)

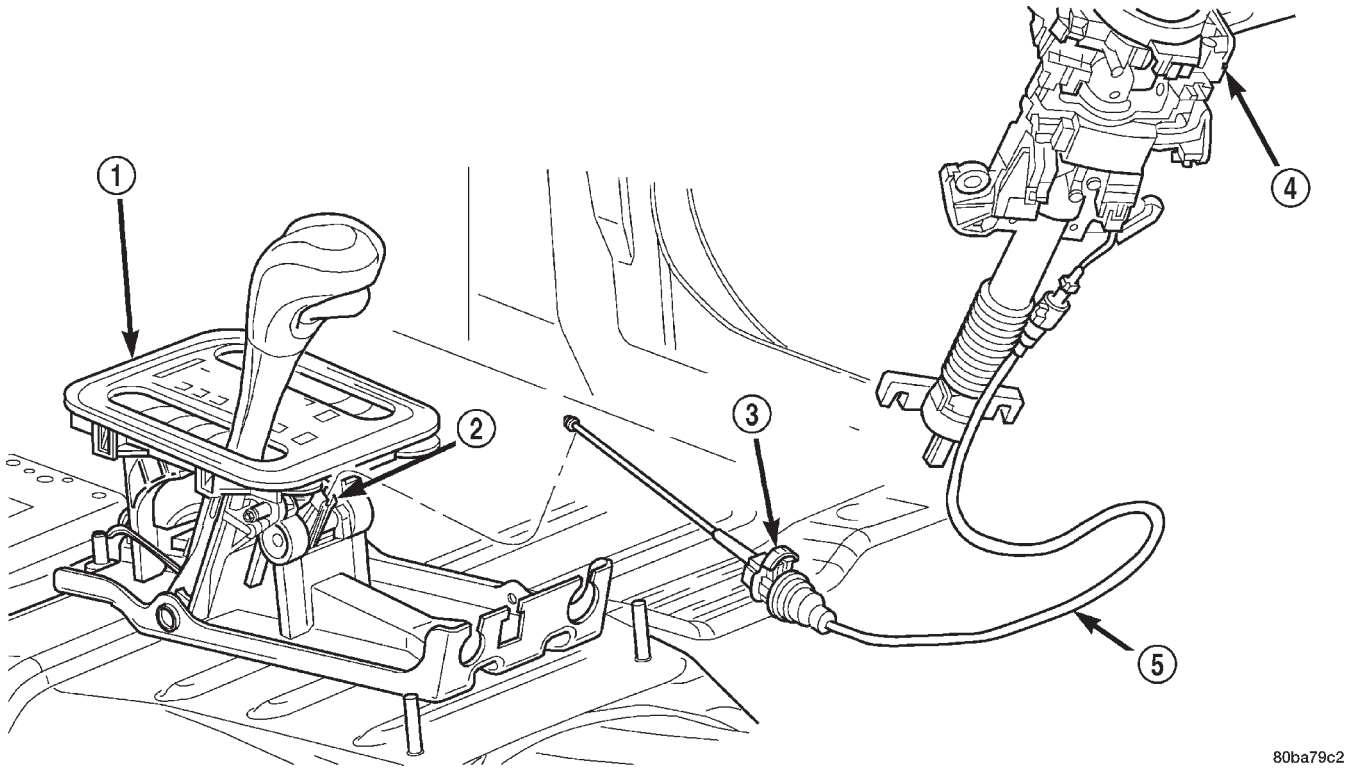

Fig. 61 Brake Transmission Shift Interlock Cable

1 - SHIFT MECHANISM
2 - SHIFTER BTSI LEVER
3 - ADJUSTMENT CLIP
4 - STEERING COLUMN ASSEMBLY
5 - INTERLOCK CABLE

tem, and the engine/axle ratio combination needed to handle heavy loads.

DIAGNOSIS AND TESTING - FLUID CONTAMINATION

Transmission fluid contamination is generally a result of:

- adding incorrect fluid
- failure to clean dipstick and fill tube when checking level
- engine coolant entering the fluid
- internal failure that generates debris
- overheat that generates sludge (fluid breakdown)
- failure to reverse flush cooler and lines after repair
- failure to replace contaminated converter after repair

The use of non-recommended fluids can result in transmission failure. The usual results are erratic shifts, slippage, abnormal wear and eventual failure due to fluid breakdown and sludge formation. Avoid this condition by using recommended fluids only.

The dipstick cap and fill tube should be wiped clean before checking fluid level. Dirt, grease and other foreign material on the cap and tube could fall into the tube if not removed beforehand. Take the time to wipe the cap and tube clean before withdrawing the dipstick.

Engine coolant in the transmission fluid is generally caused by a cooler malfunction. The only remedy is to replace the radiator as the cooler in the radiator is not a serviceable part. If coolant has circulated through the transmission for some time, an overhaul may also be necessary; especially if shift problems have developed.

The transmission cooler and lines should be reverse flushed whenever a malfunction generates sludge and/or debris. The torque converter should also be replaced at the same time.

Failure to flush the cooler and lines will result in recontamination. Flushing applies to auxiliary coolers as well. The torque converter should also be replaced whenever a failure generates sludge and debris. This is necessary because normal converter flushing procedures will not remove all contaminants.

FLUID AND FILTER (Continued)

STANDARD PROCEDURES - FLUID LEVEL CHECK

Low fluid level can cause a variety of conditions because it allows the pump to take in air along with the fluid. As in any hydraulic system, air bubbles make the fluid spongy, therefore, pressures will be low and build up slowly.

Improper filling can also raise the fluid level too high. When the transmssion has too much fluid, the geartrain churns up foam and cause the same conditions which occur with a low fluid level.

In either case, air bubbles can cause overheating and/or fluid oxidation, and varnishing. This can interfere with normal valve, clutch, and accumulator operation. Foaming can also result in fluid escaping from the transmission vent where it may be mistaken for a leak.

Along with fluid level, it is important to check the condition of the fluid. When the fluid smells burned, and is contaminated with metal or friction material particles, a complete transmission recondition is needed. Be sure to examine the fluid on the dipstick closely. If there is any doubt about its condition, drain out a sample for a double check.

After the fluid has been checked, seat the dipstick fully to seal out water and dirt.

The transmission has a dipstick to check oil level. It is located on the right side of the engine. Be sure to wipe all dirt from dipstick handle before removing.

The torque converter fills in both the P (PARK) and N (NEUTRAL) positions. Place the selector lever in P (PARK) to be sure that the fluid level check is accurate. **The engine should be running at idle speed for at least one minute, with the vehicle on level ground.** At normal operating temperature (approximately 82 C. or 180 F.), the fluid level is correct if it is in the HOT region (cross-hatched area) on the oil level indicator. The fluid level will be approximately at the upper COLD hole of the dipstick at 70° F fluid temperature.

NOTE: Engine and Transmission should be at normal operating temperature before performing this procedure.

(1) Start engine and apply parking brake.

(2) Shift the transmission into DRIVE for approximately 2 seconds.

(3) Shift the transmission into REVERSE for approximately 2 seconds.

(4) Shift the transmission into PARK.

(5) Hook up DRB® scan tool and select transmission.

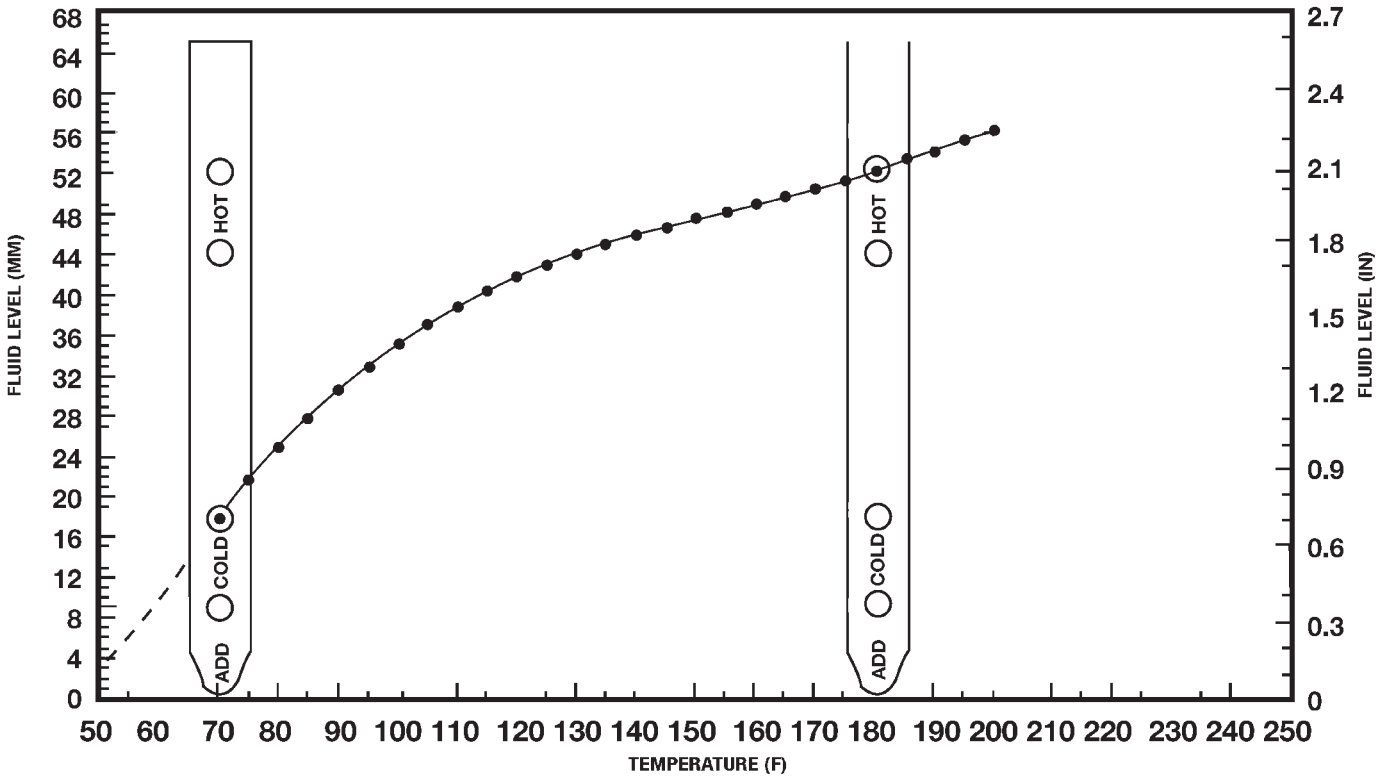

80c072fc

Transmission Fluid Temperature Chart

FLUID AND FILTER (Continued)

(6) Select sensors.
(7) Read the transmission temperature value.
(8) Compare the fluid temperature value with the chart.
(9) Adjust transmission fluid level shown on the dipstick according to the chart.

NOTE: After adding any fluid to the transmission, wait a minimum of 2 minutes for the oil to fully drain from the fill tube into the transmission before rechecking the fluid level.

(10) Check transmission for leaks.

STANDARD PROCEDURES - FLUID AND FILTER REPLACEMENT

For proper service intervals (Refer to LUBRICATION & MAINTENANCE/MAINTENANCE SCHEDULES - DESCRIPTION).

REMOVAL

(1) Hoist and support vehicle on safety stands.
(2) Place a large diameter shallow drain pan beneath the transmission pan.
(3) Remove bolts holding front and sides of pan to transmission.
(4) Loosen bolts holding rear of pan to transmission.
(5) Slowly separate front of pan away from transmission allowing the fluid to drain into drain pan.
(6) Hold up pan and remove remaining bolt holding pan to transmission.
(7) While holding pan level, lower pan away from transmission.
(8) Pour remaining fluid in pan into drain pan.
(9) Remove screws holding filter to valve body (Fig. 62).
(10) Separate filter from valve body and oil pump and pour fluid in filter into drain pan.
(11) Remove and discard the oil filter seal from the bottom of the oil pump.
(12) Using Oil Filter Wrench 8321, remove the cooler return filter from the transmission.
(13) Dispose of used trans fluid and filter properly.

INSPECTION

Inspect bottom of pan and magnet for excessive amounts of metal. A light coating of clutch material on the bottom of the pan does not indicate a problem unless accompanied by a slipping condition or shift lag. If fluid and pan are contaminated with excessive amounts or debris, refer to the diagnosis section of this group.

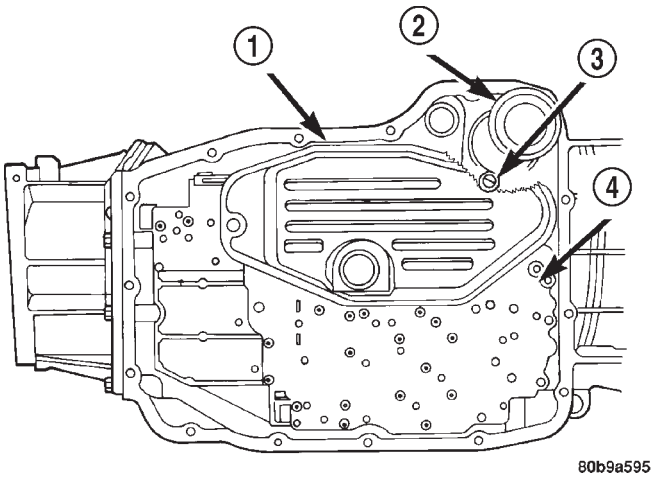

Fig. 62 Transmission Filters - 4X4 Shown

1 - PRIMARY OIL FILTER
2 - COOLER RETURN FILTER
3 - FILTER BYPASS VALVE
4 - VALVE BODY

CLEANING

(1) Using a suitable solvent, clean pan and magnet.
(2) Using a suitable gasket scraper, clean original sealing material from surface of transmission case and the transmission pan.

INSTALLATION

(1) Install a new oil filter seal into the bottom of the oil pump.

NOTE: Do not attempt to install the seal onto the oil filter first and then into the oil pump. An unsatisfactory seal between the oil pump and filter will result, allowing air to be drawn into the pump.

(2) Place replacement filter in position on valve body and into the oil pump.
(3) Install screws to hold filter to valve body (Fig. 62). Tighten screws to 4.5 N·m (40 in. lbs.) torque.
(4) Install new cooler return filter onto the transmission. Torque the filter to 14.12 N·m (125 in.lbs.).
(5) Place bead of Mopar® RTV sealant onto the transmission case sealing surface.
(6) Place pan in position on transmission.
(7) Install screws to hold pan to transmission. Tighten bolts to 11.8 N·m (105 in. lbs.) torque.
(8) Lower vehicle and fill transmission with Mopar® ATF +4, type 9602 fluid.

STANDARD PROCEDURES - TRANSMISSION FILL

To avoid overfilling transmission after a fluid change or overhaul, perform the following procedure:

FLUID AND FILTER (Continued)

(1) Remove dipstick and insert clean funnel in transmission fill tube.

(2) Add following initial quantity of Mopar® ATF +4 to transmission:

(a) If only fluid and filter were changed, add **10 pints (5 quarts)** of ATF +4 to transmission.

(b) If transmission was completely overhauled, torque converter was replaced or drained, and cooler was flushed, add **24 pints (12 quarts)** of ATF +4 to transmission.

(3) Check the transmission fluid (Refer to 21 - TRANSMISSION/TRANSAXLE/AUTOMATIC - 45RFE/FLUID - STANDARD PROCEDURE).

GEARSHIFT CABLE

DIAGNOSIS AND TESTING - GEARSHIFT CABLE

(1) The floor shifter lever and gate positions should be in alignment with all transmission PARK, NEUTRAL, and gear detent positions.

(2) Engine starts must be possible with floor shift lever in PARK or NEUTRAL gate positions only. Engine starts must not be possible in any other gear position.

(3) With floor shift lever handle push-button not depressed and lever in:

(a) PARK position - Apply forward force on center of handle and remove pressure. Engine starts must be possible.

(b) PARK position - Apply rearward force on center of handle and remove pressure. Engine starts must be possible.

(c) NEUTRAL position - Normal position. Engine starts must be possible.

(d) NEUTRAL position - Engine running and brakes applied, apply forward force on center of shift handle. Transmission shall not be able to shift from NEUTRAL to REVERSE.

REMOVAL

(1) Shift transmission into PARK.

(2) Raise vehicle.

(3) Remove the shift cable eyelet from the transmission manual shift lever (Fig. 63).

(4) Remove shift cable from the cable support bracket.

(5) Lower vehicle.

(6) Remove necessary console parts for access to shift lever assembly and shift cable. (Refer to 23 - BODY/INTERIOR/FLOOR CONSOLE - REMOVAL)

(7) Disconnect cable at shift lever and shifter assembly bracket (Fig. 64).

(8) Remove the nuts holding the shift cable seal plate to the floor pan (Fig. 65).

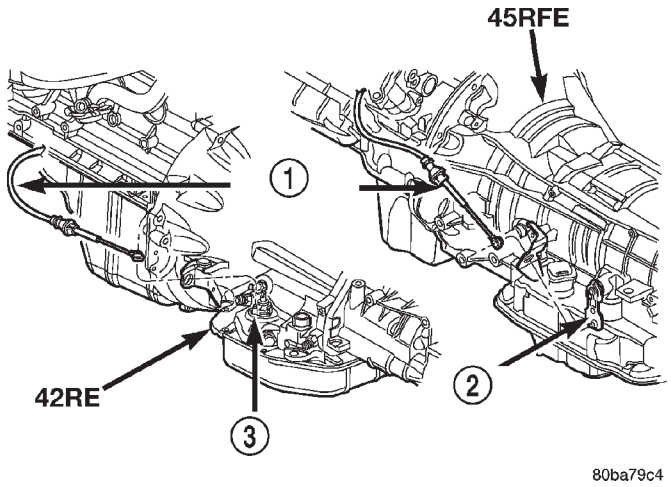

Fig. 63 Remove Shift Cable From Transmission

1 - SHIFT CABLE
2 - MANUAL LEVER
3 - MANUAL LEVER

(9) Pull cable through floor panel opening.

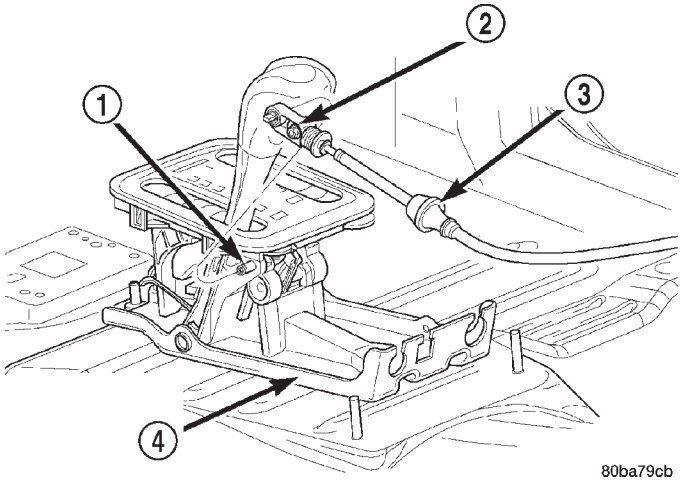

Fig. 64 Transmission Shift Cable at Shifter

1 - SHIFT LEVER PIN
2 - ADJUSTMENT SCREW
3 - SHIFT CABLE
4 - SHIFTER ASSEMBLY BRACKET

(10) Remove shift cable from vehicle.

INSTALLATION

(1) Route cable through hole in floor pan.

(2) Install seal plate to studs in floor pan.

(3) Install nuts to hold seal plate to floor pan. Tighten nuts to 7 N·m (65 in.lbs.).

(4) Install the shift cable to the shifter assembly bracket. Push cable into the bracket until secure.

(5) Place the floor shifter lever in PARK position.

(6) Loosen the adjustment screw on the shift cable.

(7) Snap the shift cable onto the shift lever pin.

GEARSHIFT CABLE (Continued)

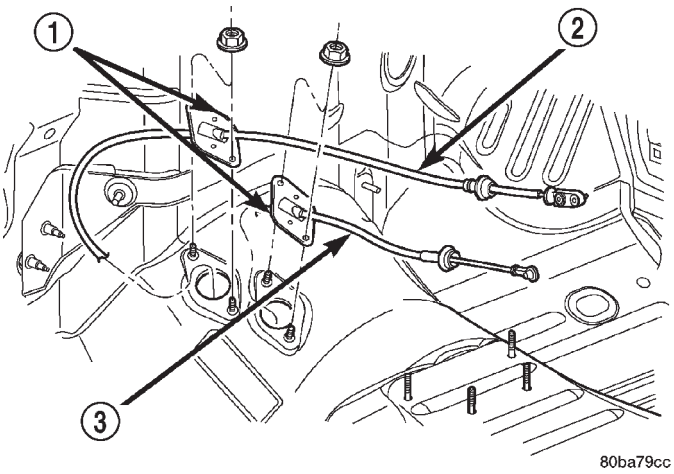

Fig. 65 Shift Cables at Floor Pan

1 - SEAL PLATES
2 - TRANSMISSION SHIFT CABLE
3 - TRANSFER CASE SHIFT CABLE

(8) Raise the vehicle.

(9) Install the shift cable to the shift cable support bracket.

(10) Shift the transmission into PARK. PARK is the rearmost detent position on the transmission manual shift lever.

(11) Snap the shift cable onto the transmission manual shift lever.

(12) Lower vehicle.

(13) Verify that the shift lever is in the PARK position.

(14) Tighten the adjustment screw to 7 N·m (65 in.lbs.).

(15) Verify correct shifter operation.

(16) Install any console parts removed for access to shift lever assembly and shift cable. (Refer to 23 - BODY/INTERIOR/FLOOR CONSOLE - INSTALLATION)

ADJUSTMENTS - GEARSHIFT CABLE

Check adjustment by starting the engine in PARK and NEUTRAL. Adjustment is CORRECT if the engine starts only in these positions. Adjustment is INCORRECT if the engine starts in one but not both positions. If the engine starts in any position other than PARK or NEUTRAL, or if the engine will not start at all, the park/neutral position switch or TRS may be faulty.

Gearshift Adjustment Procedure

(1) Shift transmission into PARK.

(2) Remove floor console as necessary for access to the shift cable adjustment. (Refer to 23 - BODY/INTERIOR/FLOOR CONSOLE - REMOVAL)

(3) Loosen the shift cable adjustment screw (Fig. 66).

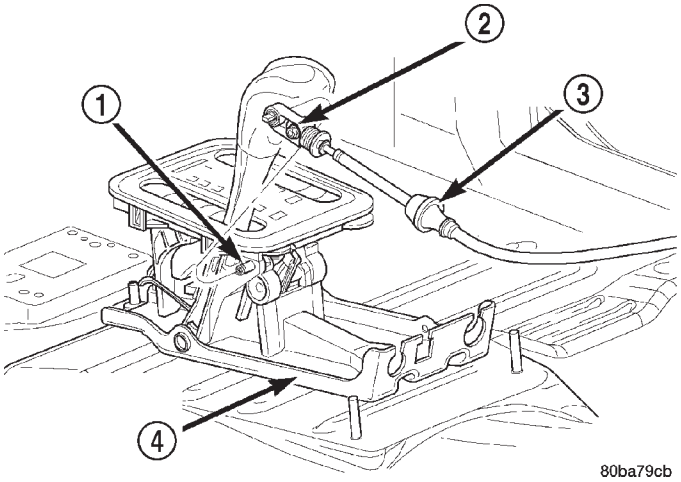

Fig. 66 Shift Cable at the Shifter

1 - SHIFT LEVER PIN
2 - ADJUSTMENT SCREW
3 - SHIFT CABLE
4 - SHIFTER ASSEMBLY BRACKET

(4) Raise vehicle.

(5) Unsnap cable eyelet from transmission shift lever.

(6) Verify transmission shift lever is in PARK detent by moving lever fully rearward. Last rearward detent is PARK position.

(7) Verify positive engagement of transmission park lock by attempting to rotate propeller shaft. Shaft will not rotate when park lock is engaged.

(8) Snap cable eyelet onto transmission shift lever.

(9) Lower vehicle

(10) Tighten the shift cable adjustment screw to 7 N·m (65 in.lbs.).

(11) Verify correct operation.

(12) Install any floor console components removed for access. (Refer to 23 - BODY/INTERIOR/FLOOR CONSOLE - INSTALLATION)

HOLDING CLUTCHES

DESCRIPTION

Three hydraulically applied multi-disc clutches are used to hold planetary geartrain components stationary while the input clutches drive others. The 2C, 4C, and Low/Reverse clutches are considered holding clutches. The 2C and 4C clutches are located in the 4C retainer/bulkhead (Fig. 67), while the Low/Reverse clutch is located at the rear of the transmission case (Fig. 68).

OPERATION

2C CLUTCH

The 2C clutch is hydraulically applied in second and fifth gear by pressurized fluid against the 2C piston. When the 2C clutch is applied, the reverse sun gear assembly is held or grounded to the transmission case by holding the reaction planetary carrier.

4C CLUTCH

The 4C clutch is hydraulically applied in second prime and fourth gear by pressurized fluid against the 4C clutch piston. When the 4C clutch is applied, the reaction annulus gear is held or grounded to the transmission case.

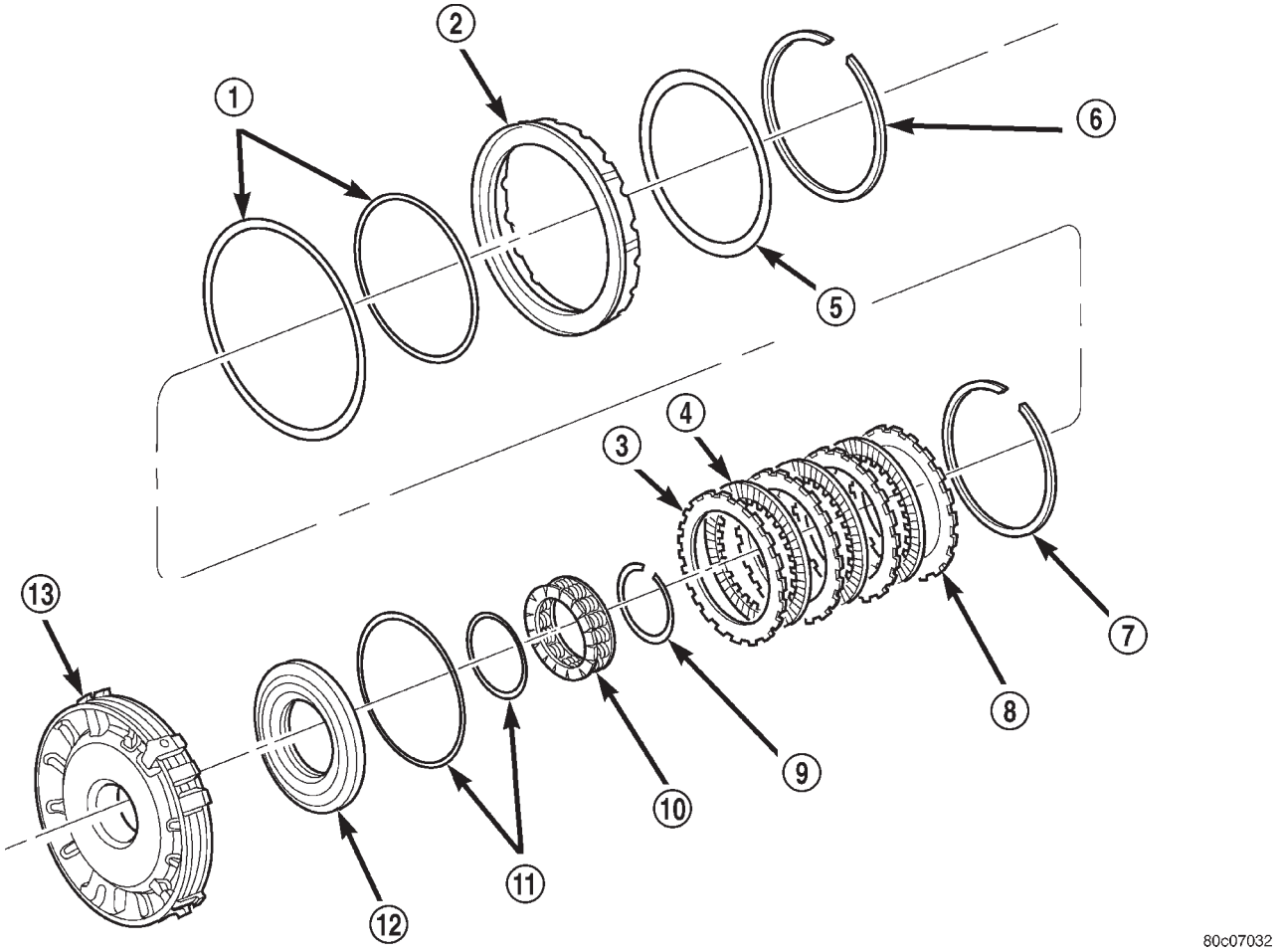

Fig. 67 2C and 4C Clutches

1 - SEAL
2 - 2C PISTON
3 - PLATE
4 - DISC
5 - 2C BELLEVILLE SPRING
6 - SNAP-RING
7 - SNAP-RING (SELECT)
8 - REACTION PLATE
9 - SNAP-RING
10 - RETURN SPRING
11 - SEAL
12 - 4C PISTON
13 - 4C RETAINER/BULKHEAD

HOLDING CLUTCHES (Continued)

LOW/REVERSE CLUTCH

The Low/Reverse clutch is hydraulically applied in park, reverse, neutral, and first gears by pressurized fluid against the Low/Reverse clutch piston. When the Low/Reverse clutch is applied, the input annulus assembly is held or grounded to the transmission case.

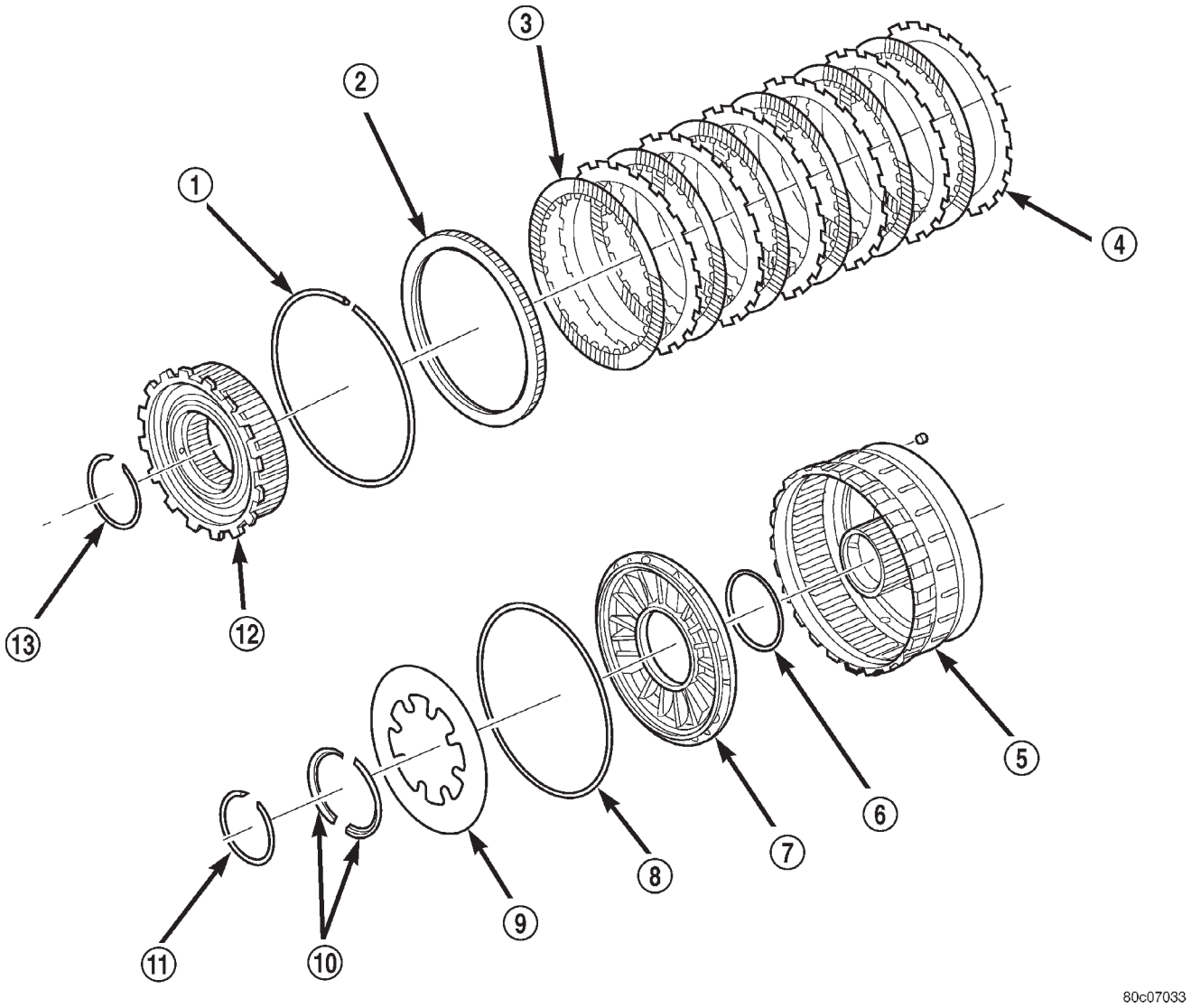

Fig. 68 Low/Reverse Clutch

1 - SNAP-RING (SELECT)
2 - REACTION PLATE
3 - DISC
4 - PLATE
5 - L/R CLUTCH RETAINER
6 - SEAL
7 - PISTON
8 - SEAL
9 - BELLEVILLE SPRING
10 - RETAINER
11 - SNAP-RING
12 - OVERRUNNING CLUTCH
13 - SNAP-RING

INPUT CLUTCH ASSEMBLY

DESCRIPTION

Three hydraulically applied input clutches are used to drive planetary components. The underdrive, overdrive, and reverse clutches are considered input clutches and are contained within the input clutch assembly (Fig. 69) and (Fig. 70). The input clutch assembly also contains:

- Input shaft
- Input hub
- Clutch retainer
- Underdrive piston
- Overdrive/reverse piston
- Overdrive hub
- Underdrive hub

OPERATION

The three input clutches are responsible for driving different components of the planetary geartrain.

UNDERDRIVE CLUTCH

The underdrive clutch is hydraulically applied in first, second, second prime, and third (direct) gears

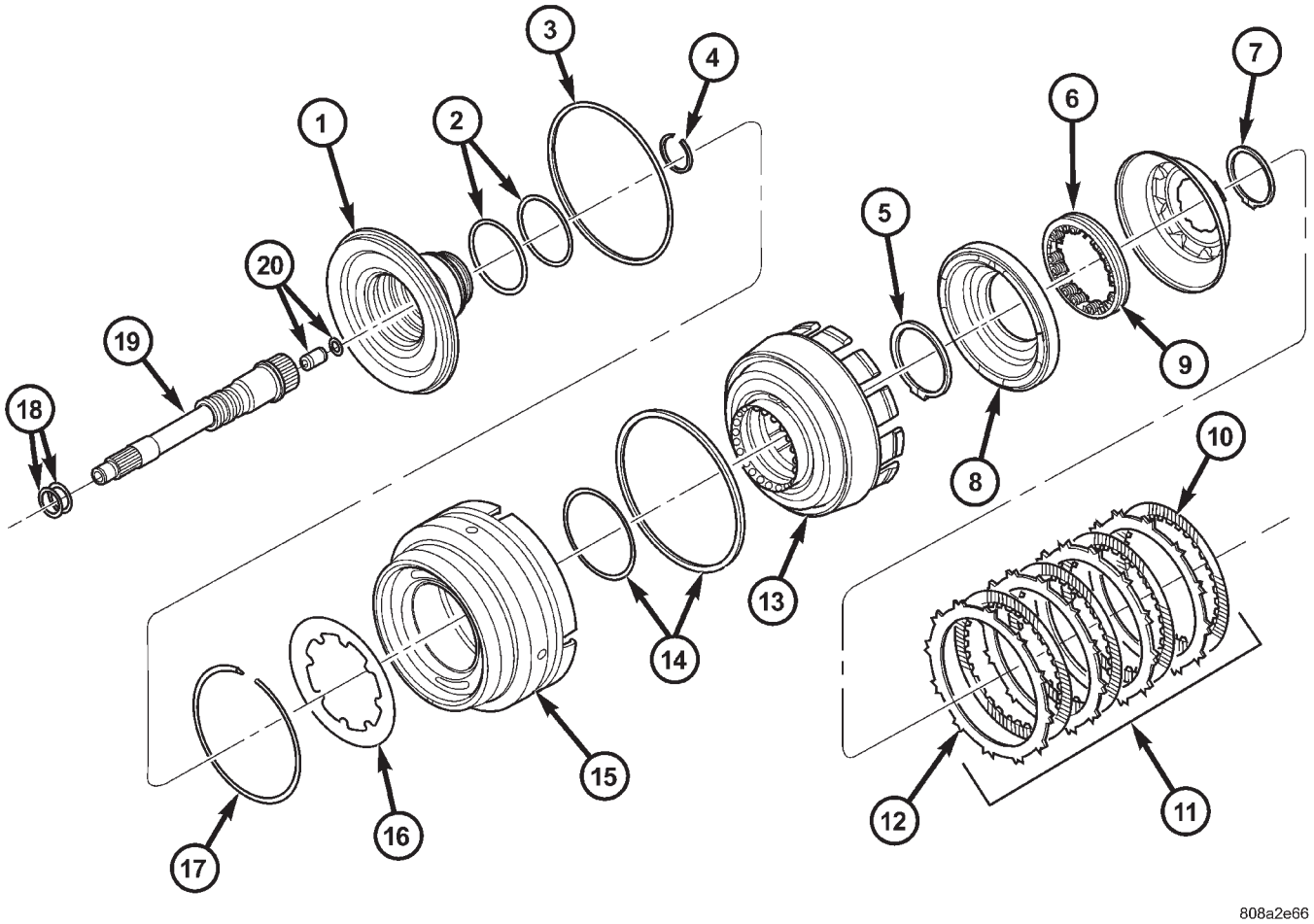

Fig. 69 Input Clutch Assembly-Part 1

1 - INPUT CLUTCH HUB
2 - SEAL
3 - SEAL
4 - SNAP-RING
5 - SNAP-RING
6 - UD BALANCE PISTON
7 - SNAP-RING
8 - UD PISTON
9 - SPRING
10 - DISC
11 - UD CLUTCH
12 - PLATE
13 - CLUTCH RETAINER
14 - SEAL
15 - OD/REV PISTON
16 - BELLEVILLE SPRING
17 - SNAP-RING
18 - SEAL
19 - INPUT SHAFT
20 - LUBRICATION CHECK VALVE AND SNAP-RING

INPUT CLUTCH ASSEMBLY (Continued)

by pressurized fluid against the underdrive piston. When the underdrive clutch is applied, the underdrive hub drives the input sun gear.

OVERDRIVE CLUTCH

The overdrive clutch is hydraulically applied in third (direct), fourth, and fifth gears by pressurized fluid against the overdrive/reverse piston. When the overdrive clutch is applied, the overdrive hub drives the reverse carrier/input annulus assembly.

REVERSE CLUTCH

The reverse clutch is hydraulically applied in reverse gear by pressurized fluid against the overdrive/reverse piston. When the reverse clutch is applied, the reaction annulus gear is driven.

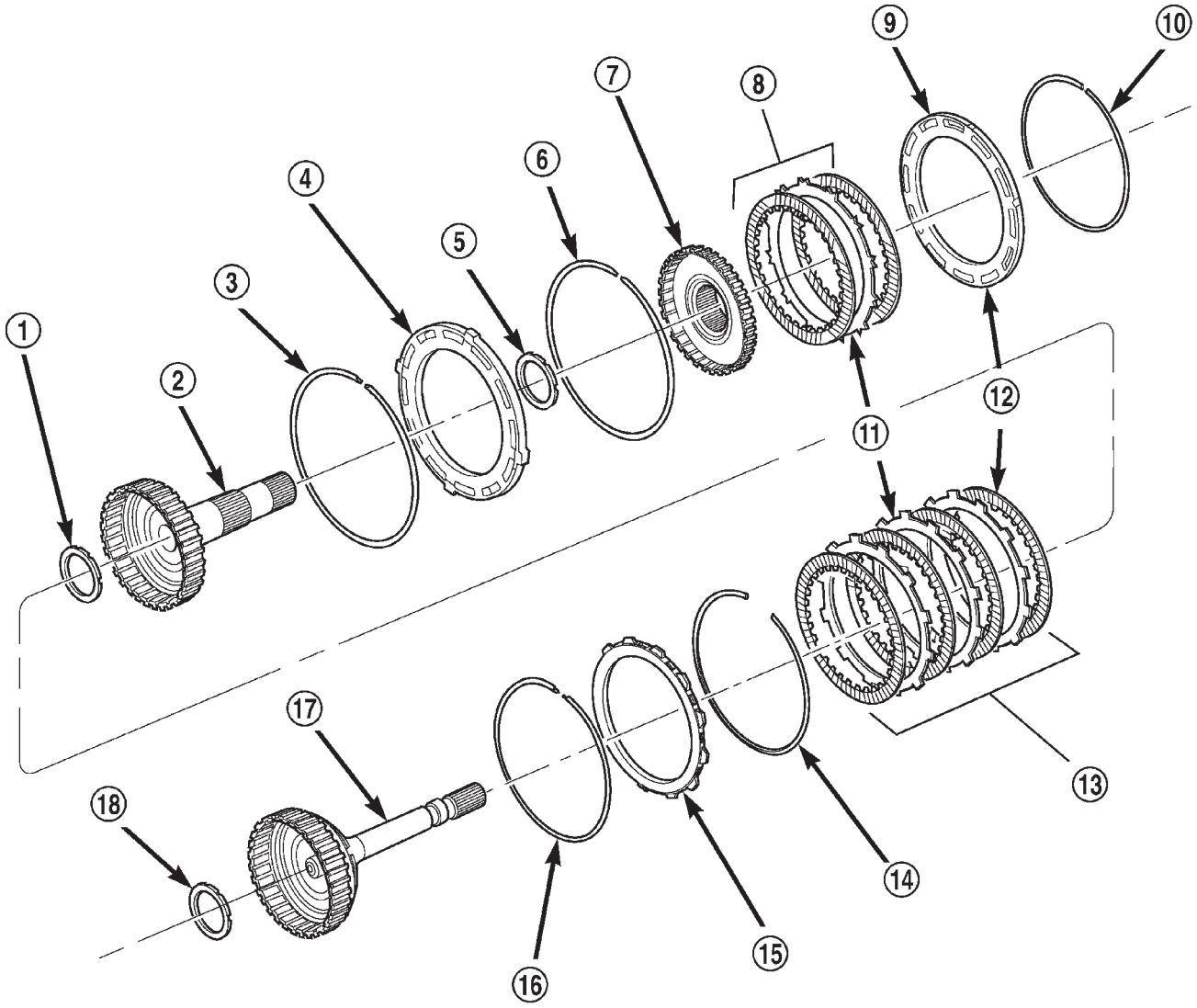

Fig. 70 Input Clutch Assembly-Part 2

1 - BEARING NUMBER 3
2 - OD HUB/SHAFT
3 - SNAP-RING (WAVE)
4 - REV/OD REACTION PLATE
5 - BEARING NUMBER 4
6 - SNAP-RING (FLAT)
7 - REV HUB/SHAFT
8 - REV CLUTCH
9 - REV REACTION PLATE
10 - SNAP RING (SELECT)
11 - PLATE
12 - DISC
13 - OD CLUTCH
14 - SNAP-RING (TAPER)
15 - UD/OD REACTION PLATE
16 - SNAP-RING (FLAT)
17 - UD HUB/SHAFT
18 - BEARING NUMBER 2

INPUT CLUTCH ASSEMBLY (Continued)

DISASSEMBLY

(1) Remove the reverse reaction plate selective snap-ring from the input clutch retainer (Fig. 71).

(2) Remove the reverse reaction plate from the input clutch retainer.

(3) Remove the reverse hub and reverse clutch pack from the input clutch retainer.

(4) Remove the number 4 bearing from the overdrive hub.

(5) Remove the overdrive hub from the input clutch retainer (Fig. 71).

(6) Remove the number 3 bearing from the underdrive hub.

(7) Remove the OD/reverse reaction plate snap-ring from the input clutch retainer.

(8) Remove the underdrive hub, overdrive clutch, and overdrive reaction plate from the input clutch retainer (Fig. 71).

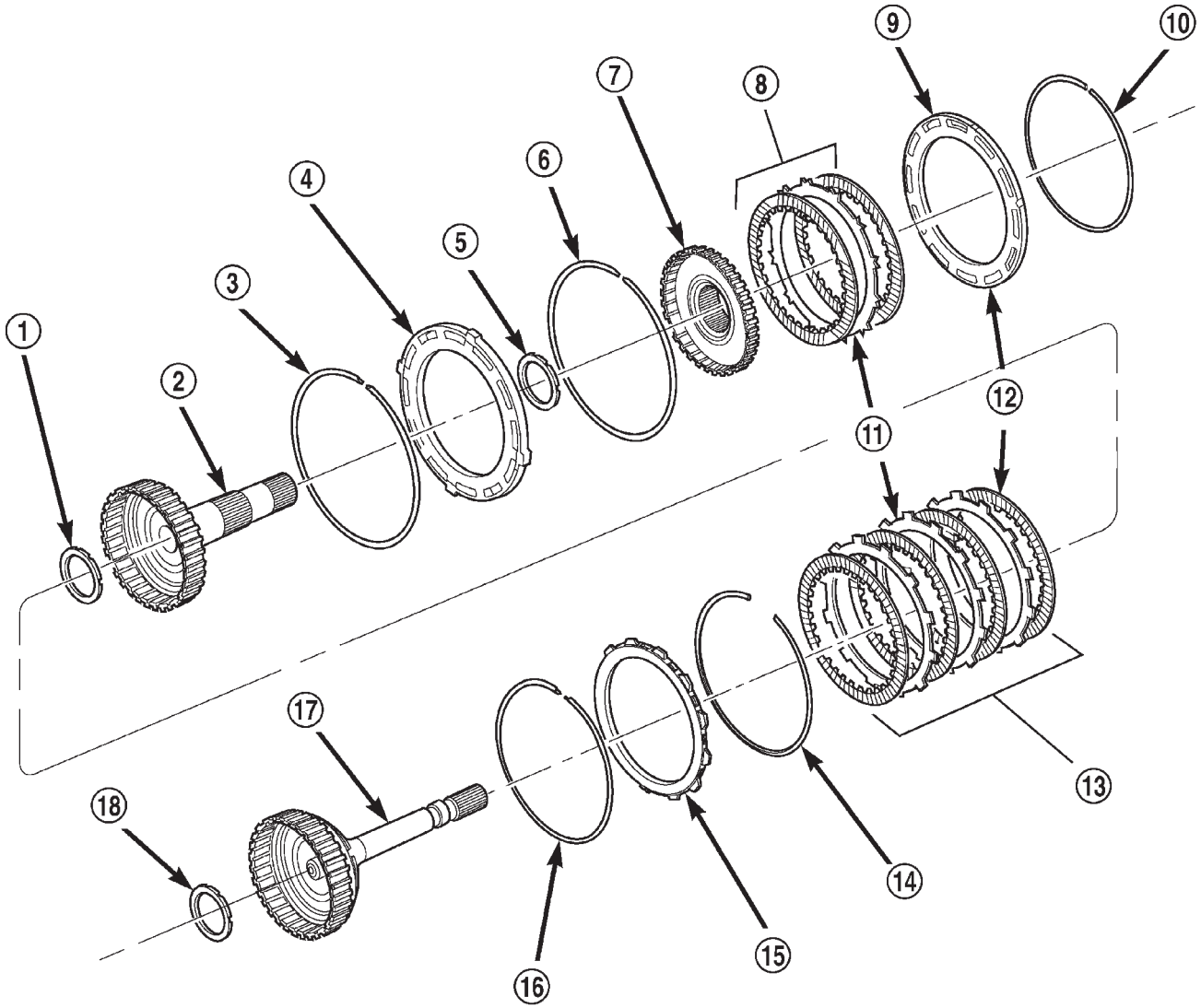

Fig. 71 Input Clutch Assembly - Part 2

1 - BEARING NUMBER 3
2 - OD HUB/SHAFT
3 - SNAP-RING (WAVE)
4 - REV/OD REACTION PLATE
5 - BEARING NUMBER 4
6 - SNAP-RING (FLAT)
7 - REV HUB/SHAFT
8 - REV CLUTCH
9 - REV REACTION PLATE
10 - SNAP RING (SELECT)
11 - PLATE
12 - DISC
13 - OD CLUTCH
14 - SNAP-RING (TAPER)
15 - UD/OD REACTION PLATE
16 - SNAP-RING (FLAT)
17 - UD HUB/SHAFT
18 - BEARING NUMBER 2

INPUT CLUTCH ASSEMBLY (Continued)

NOTE: The overdrive friction discs and steel discs are thicker than the matching components in the underdrive and reverse clutches.

(9) Remove the number 2 bearing from the input clutch hub.

(10) Remove the overdrive clutch wave snap-ring from the input clutch retainer.

(11) Remove the UD/OD reaction plate tapered snap-ring from the input clutch retainer.

(12) Remove the UD/OD reaction plate from the input clutch retainer.

(13) Remove the UD/OD reaction plate flat snap-ring from the input clutch retainer (Fig. 71).

(14) Remove the underdrive clutch pack from the input clutch retainer (Fig. 73).

(15) Using Spring Compressor 8251, compress the UD/OD balance piston and remove the snap-ring from the input clutch hub (Fig. 72).

(16) Remove the UD/OD balance piston and piston return spring from the input clutch retainer (Fig. 73).

(17) Remove the underdrive piston from the input clutch retainer (Fig. 73).

NOTE: Both the UD/OD balance piston and the underdrive piston have seals molded onto them. If the seal is damaged, do not attempt to install a new seal onto the piston. The piston/seal must be replaced as an assembly.

(18) Remove the input clutch retainer tapered snap-ring.

(19) Separate input clutch retainer from input clutch hub.

(20) Separate OD/reverse piston from input clutch hub retainer (Fig. 73).

(21) Remove all seals and o-rings from the input shaft and input hub. The o-rings on the input hub are color coded. Be sure to make note of which o-ring belongs in which location.

ASSEMBLY

(1) Install all new seals and o-rings onto the input shaft and input hub. The o-rings on the input hub are color coded. Be sure to install the correct o-ring in the correct location.

(2) Check the transmission lubrication check valve located in the input shaft using shop air. The valve should only allow air flow in one direction. If the valve allows no air flow, or air flow in both directions, the valve will need to be replaced.

(3) Lubricate all seals with Mopar® ATF +4, type 9602, prior to installation.

(4) Assemble the OD/reverse piston onto the input clutch hub (Fig. 74).

(5) Assemble the input clutch retainer onto the input clutch hub.

(6) Install the input clutch retainer tapered snap-ring with tapered side up onto the input clutch hub.

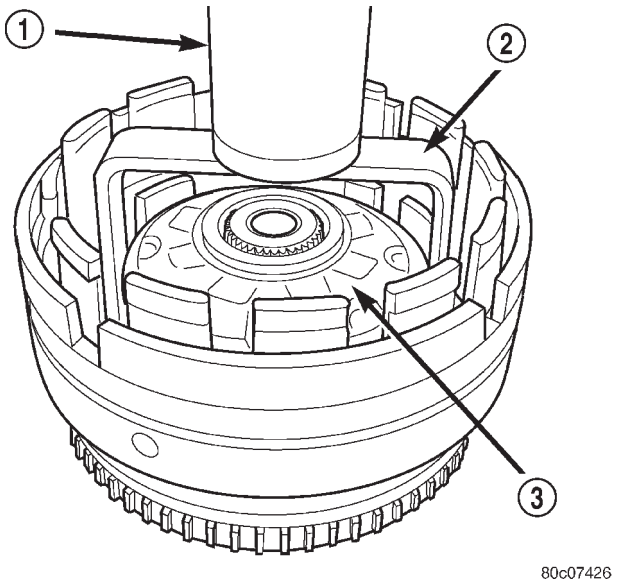

Fig. 72 Compressing UD/OD Balance Piston Using Tool 8251

1 - PRESS
2 - TOOL 8251
3 - BALANCE PISTON

INPUT CLUTCH ASSEMBLY (Continued)

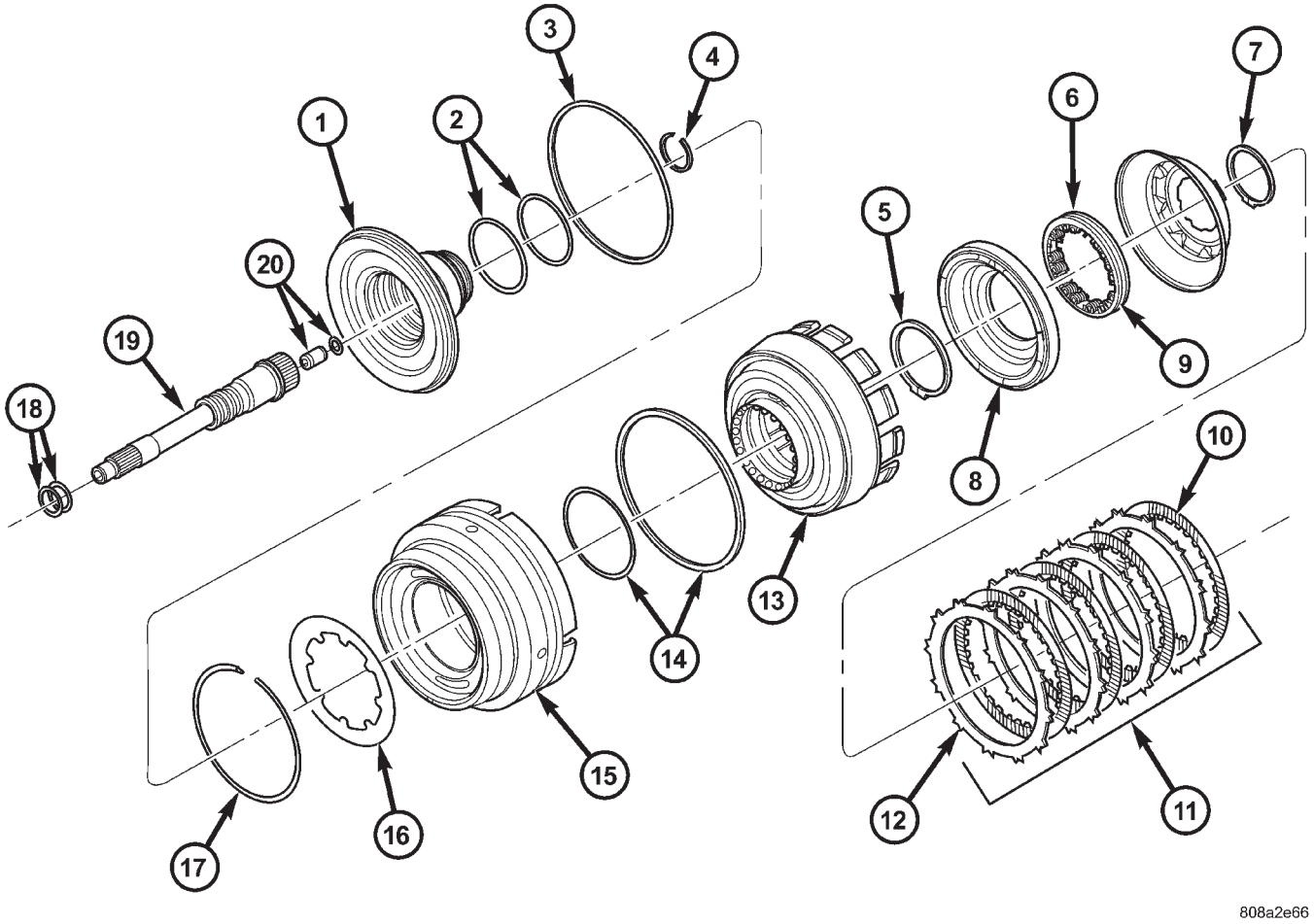

Fig. 73 Input Clutch Assembly - Part 1

1 - INPUT CLUTCH HUB
2 - SEAL
3 - SEAL
4 - SNAP-RING
5 - SNAP-RING
6 - UD BALANCE PISTON
7 - SNAP-RING
8 - UD PISTON
9 - SPRING
10 - DISC
11 - UD CLUTCH
12 - PLATE
13 - CLUTCH RETAINER
14 - SEAL
15 - OD/REV PISTON
16 - BELLEVILLE SPRING
17 - SNAP-RING
18 - SEAL
19 - INPUT SHAFT
20 - LUBRICATION CHECK VALVE AND SNAP-RING

INPUT CLUTCH ASSEMBLY (Continued)

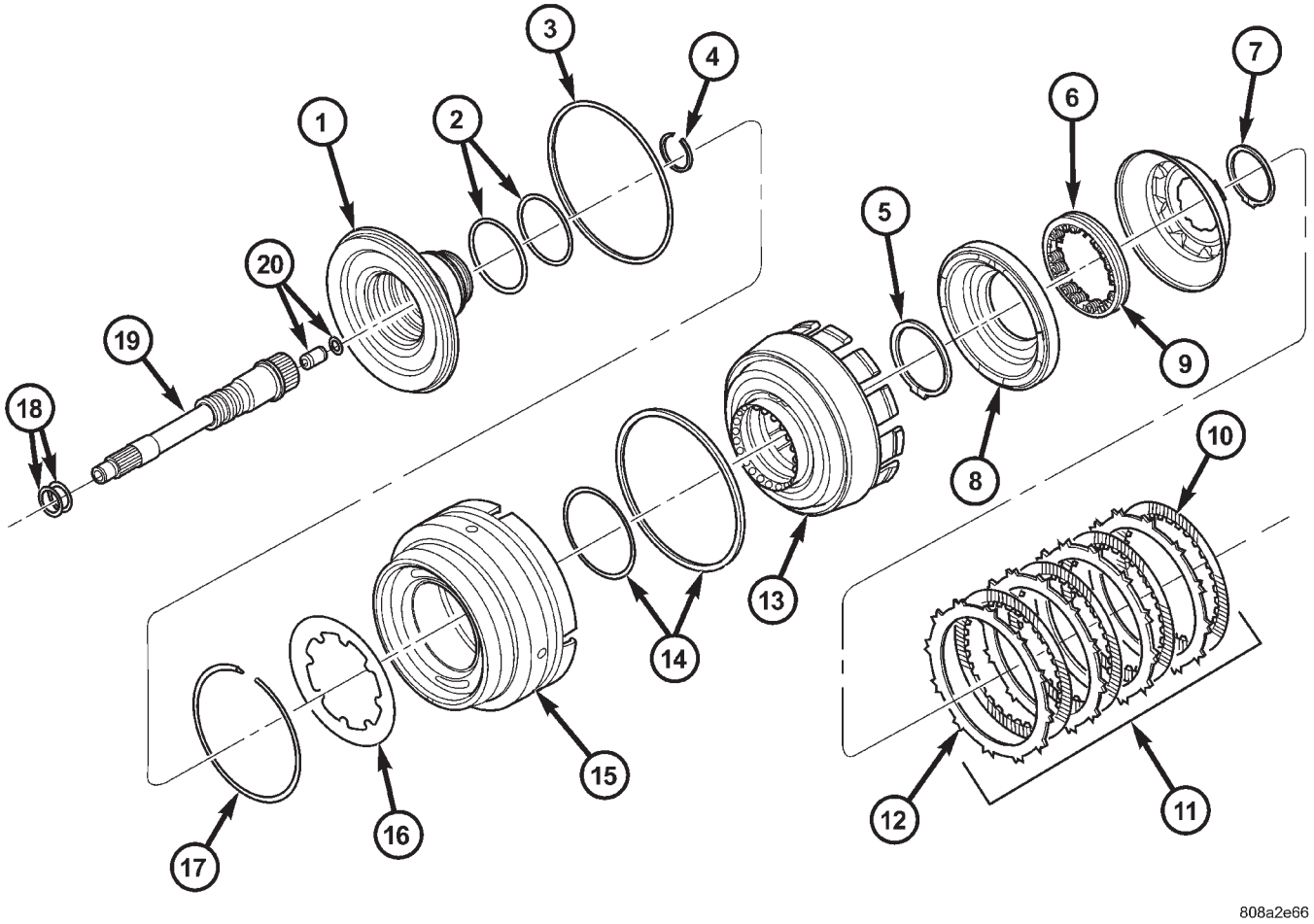

Fig. 74 Input Clutch Assembly - Part 2

1 - INPUT CLUTCH HUB
2 - SEAL
3 - SEAL
4 - SNAP-RING
5 - SNAP-RING
6 - UD BALANCE PISTON
7 - SNAP-RING
8 - UD PISTON
9 - SPRING
10 - DISC
11 - UD CLUTCH
12 - PLATE
13 - CLUTCH RETAINER
14 - SEAL
15 - OD/REV PISTON
16 - BELLEVILLE SPRING
17 - SNAP-RING
18 - SEAL
19 - INPUT SHAFT
20 - LUBRICATION CHECK VALVE AND SNAP-RING

INPUT CLUTCH ASSEMBLY (Continued)

(7) Install Piston Guides 8504 into the input clutch retainer (Fig. 75) and onto the input clutch hub to guide the inner and outer underdrive piston seals into position.

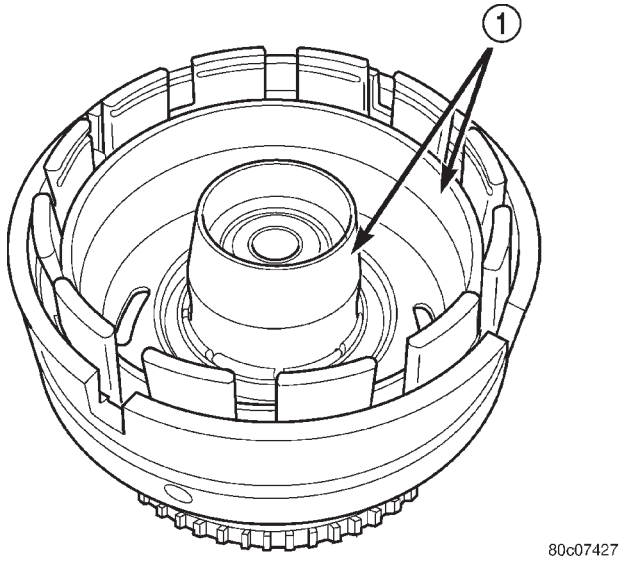

Fig. 75 Install Underdrive Piston Using Tool 8504

1 - TOOL 8504

(8) Install the underdrive piston into the input clutch retainer and over the input clutch hub (Fig. 74).

(9) Install the UD/OD balance piston return spring pack into the input clutch retainer.

(10) Install Piston Guide 8252 into the input clutch retainer (Fig. 76) to guide the UD/OD balance piston seal into position inside the underdrive piston.

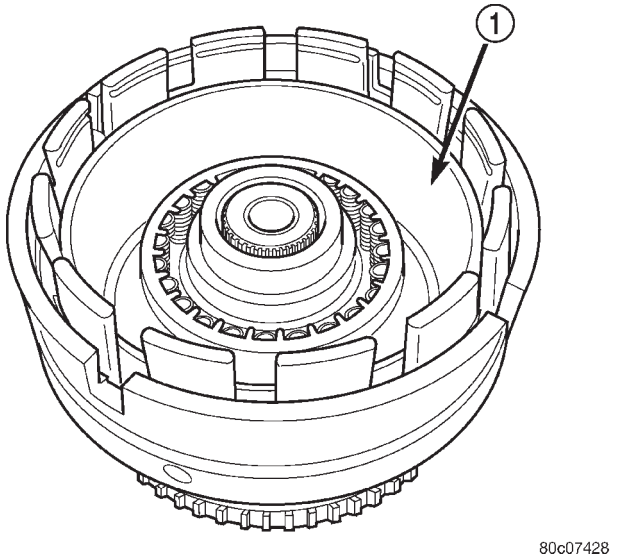

Fig. 76 Install Balance Piston Using Tool 8252

1 - TOOL 8252

(11) Install the UD/OD balance piston into the input clutch retainer and the underdrive piston.

(12) Using Spring Compressor 8251, compress the UD/OD return spring pack and secure the piston in place with the snap-ring (Fig. 77).

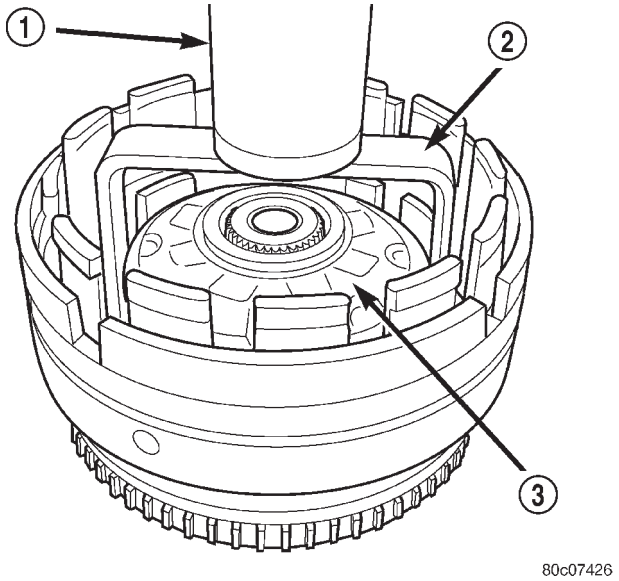

Fig. 77 Compressing UD/OD Balance Piston Using Tool 8251

1 - PRESS
2 - TOOL 8251
3 - BALANCE PISTON

(13) Install the underdrive clutch pack into the input clutch retainer (Fig. 74).

(14) Install the UD/OD reaction plate lower flat snap-ring (Fig. 78). The correct snap-ring can be identified by the two tabbed ears.

(15) Install the UD/OD reaction plate into the input clutch retainer. The reaction plate is to be installed with the big step down.

(16) Install the UD/OD reaction plate upper tapered snap-ring with tapered side up.

(17) Install the input clutch assembly into Input Clutch Pressure Fixture 8260 (Fig. 79). Mount a dial indicator to the assembly, push down on the clutch discs and zero the indicator against the underdrive clutch discs (Fig. 80). Apply 20 psi of air pressure to the underdrive clutch and record the dial indicator reading. Measure and record UD clutch pack measurement in four (4) places, 90° apart. Take average of four measurements and compare with UD clutch pack clearance specification. The correct clutch clearance is 0.76-1.16 mm (0.030-0.063 in.). The reaction plate is not selective. If the clutch clearance is not within specification, replace the reaction plate along with all the friction and steel discs.

(18) Install the overdrive clutch pack into the input clutch retainer (Fig. 78). The overdrive steel

INPUT CLUTCH ASSEMBLY (Continued)

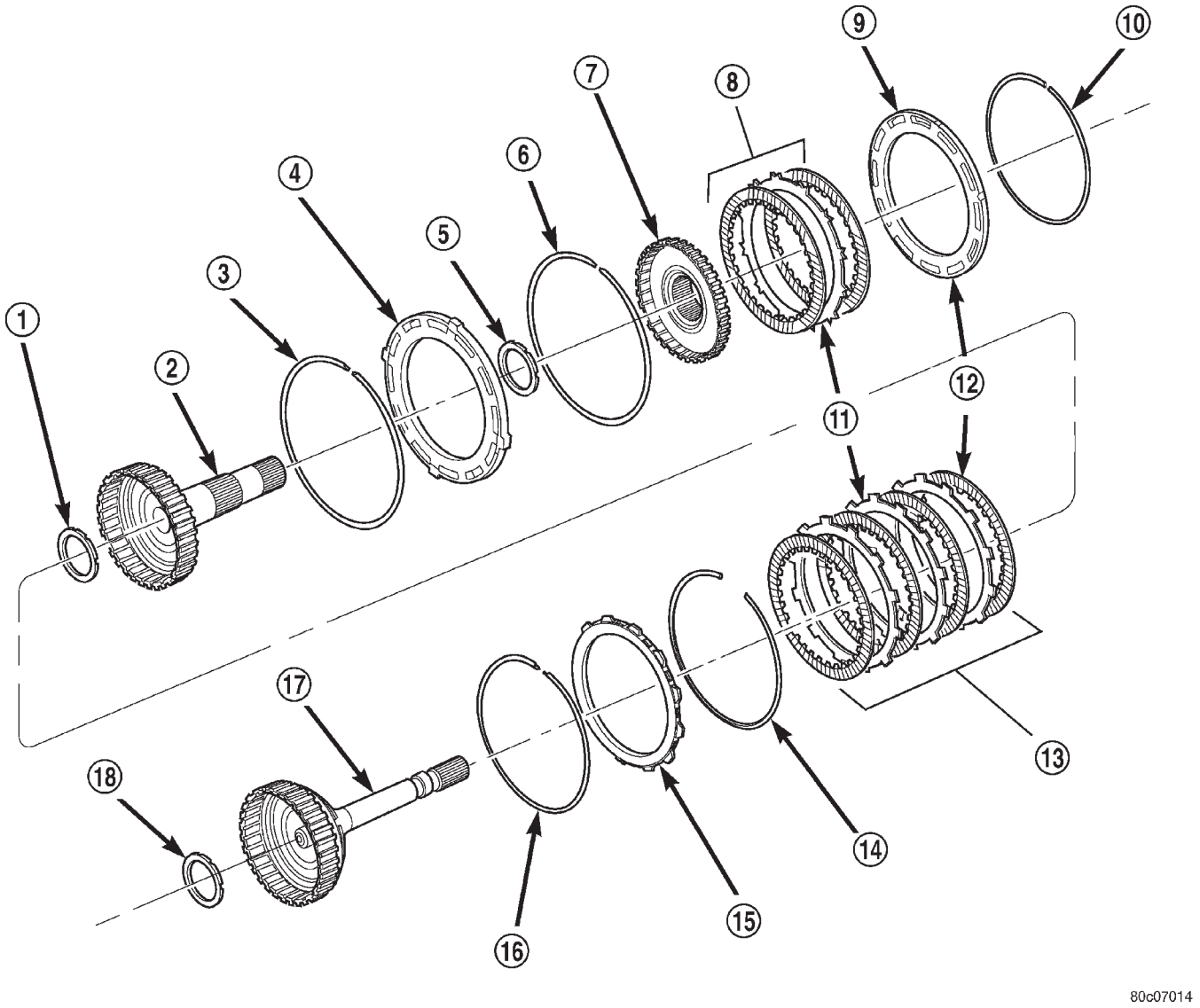

Fig. 78 Input Clutch Assembly - Part I

1 - BEARING NUMBER 3
2 - OD HUB/SHAFT
3 - SNAP-RING (WAVE)
4 - REV/OD REACTION PLATE
5 - BEARING NUMBER 4
6 - SNAP-RING (FLAT)
7 - REV HUB/SHAFT
8 - REV CLUTCH
9 - REV REACTION PLATE
10 - SNAP RING (SELECT)
11 - PLATE
12 - DISC
13 - OD CLUTCH
14 - SNAP-RING (TAPER)
15 - UD/OD REACTION PLATE
16 - SNAP-RING (FLAT)
17 - UD HUB/SHAFT
18 - BEARING NUMBER 2

separator plates can be identified by the lack of the half-moon cuts in the locating tabs.

(19) Install the overdrive clutch wavy snap-ring with the two tabbed ears into the input clutch retainer.

(20) Install the OD/reverse reaction plate into the input clutch retainer. The reaction plate is non-directional (Fig. 78).

(21) Install the OD/reverse reaction plate flat snap-ring into the input clutch retainer.

(22) Mount a dial indicator to the assembly and zero the indicator against the OD/reverse reaction plate (Fig. 81). Apply 20 psi of air pressure to the overdrive clutch and record the dial indicator reading. Measure and record OD clutch pack measurement in four (4) places, 90° apart. Take average of

INPUT CLUTCH ASSEMBLY (Continued)

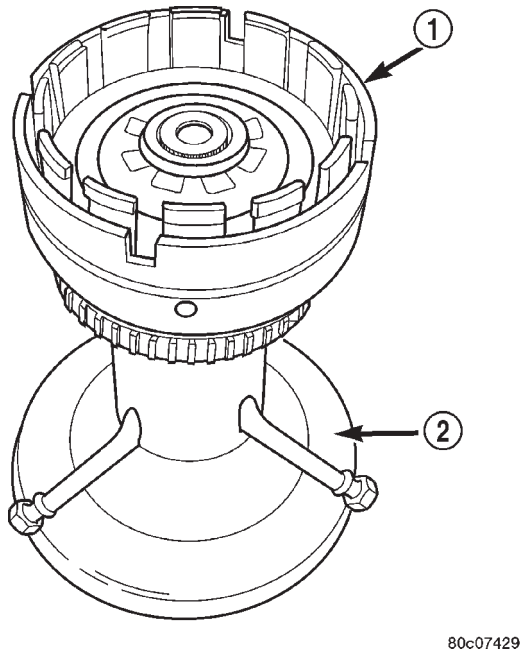

Fig. 79 Input Clutch Assembly Mounted on Tool 8260

1 - INPUT CLUTCH ASSEMBLY
2 - TOOL 8260

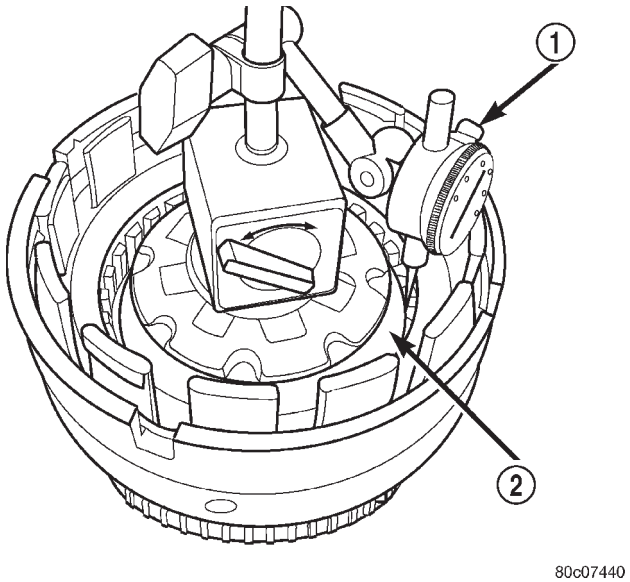

Fig. 80 Measuring UD Clutch Clearance

1 - TOOL C-3339
2 - UNDERDRIVE CLUTCH PACK

four measurements and compare with OD clutch pack clearance specification.Verify that the clutch clearance is 1.016-1.65 mm (0.040-0.065 in.). The reaction plate is not selective. If the clutch clearance is not within specification, replace the reaction plate along with all the friction and steel discs.

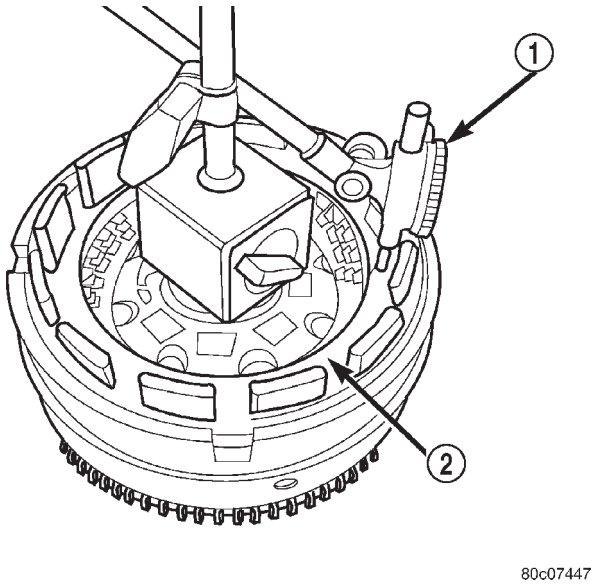

Fig. 81 Measuring OD Clutch Clearance

1 - TOOL C-3339
2 - OD/REV REACTION PLATE

(23) Install the reverse clutch pack into the input clutch retainer (Fig. 78).

(24) Install the reverse reaction plate into the input clutch retainer.

(25) Install the reverse reaction plate selective snap-ring into the input clutch retainer.

(26) Mount a dial indicator to the assembly, push down on the clutch discs, pull up on the reaction plate to ensure the plate is properly seated and zero the indicator against the reverse clutch discs (Fig. 82). Apply 20 psi of air pressure to the reverse clutch and record the dial indicator reading. Measure and record Reverse clutch pack measurement in four (4) places, 90° apart. Take average of four measurements and compare with Reverse clutch pack clearance specification. The correct clutch clearance is 0.81-1.24 mm (0.032-0.049 in.). Adjust as necessary. Install the chosen snap-ring and re-measure to verify selection.

(27) Remove the reverse clutch pack from the input clutch retainer.

(28) Install the number 2 bearing onto the underdrive hub with flat side up/forward with petroleum jelly.

(29) Install the underdrive hub into the input clutch retainer.

(30) Install the number 3 bearing into the overdrive hub with the flat side up/forward with petroleum jelly.

(31) Install the overdrive hub into the input clutch retainer.

(32) Install the number 4 bearing into the reverse hub with flat side up/forward with petroleum jelly.

INPUT CLUTCH ASSEMBLY (Continued)

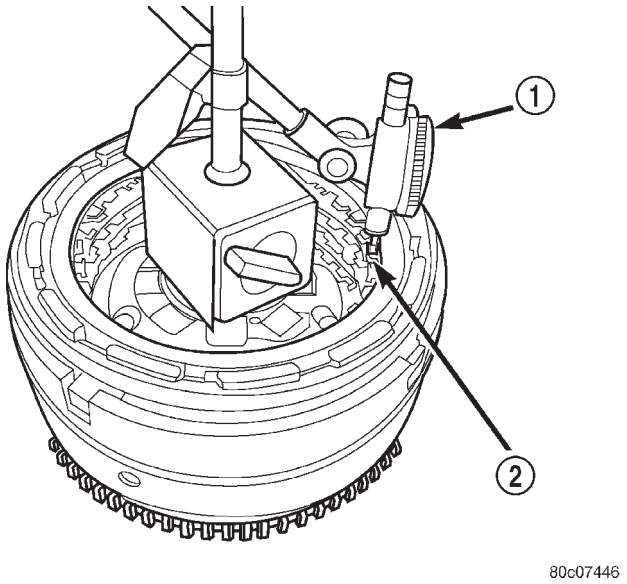

Fig. 82 Measuring Reverse Clutch Clearance

1 - TOOL C-3339
2 - REVERSE CLUTCH PACK

(33) Install the reverse hub into the input clutch retainer.

(34) Install the complete reverse clutch pack.

(35) Install the reverse reaction plate and snap-ring.

(36) Push up on reaction plate to allow reverse clutch to move freely.

INPUT SPEED SENSOR

DESCRIPTION

The Input and Output Speed Sensors are two-wire magnetic pickup devices that generate AC signals as rotation occurs. They are mounted in the left side of the transmission case and are considered primary inputs to the Transmission Control Module (TCM).

OPERATION

The Input Speed Sensor provides information on how fast the input shaft is rotating. As the teeth of the input clutch hub pass by the sensor coil, an AC voltage is generated and sent to the TCM. The TCM interprets this information as input shaft rpm.

The Output Speed Sensor generates an AC signal in a similar fashion, though its coil is excited by rotation of the rear planetary carrier lugs. The TCM interprets this information as output shaft rpm.

The TCM compares the input and output speed signals to determine the following:

- Transmission gear ratio
- Speed ratio error detection
- CVI calculation

The TCM also compares the input speed signal and the engine speed signal to determine the following:

- Torque converter clutch slippage
- Torque converter element speed ratio

REMOVAL

(1) Raise vehicle.

(2) Place a suitable fluid catch pan under the transmission.

(3) Remove the wiring connector from the input speed sensor (Fig. 83).

(4) Remove the bolt holding the input speed sensor to the transmission case.

(5) Remove the input speed sensor from the transmission case.

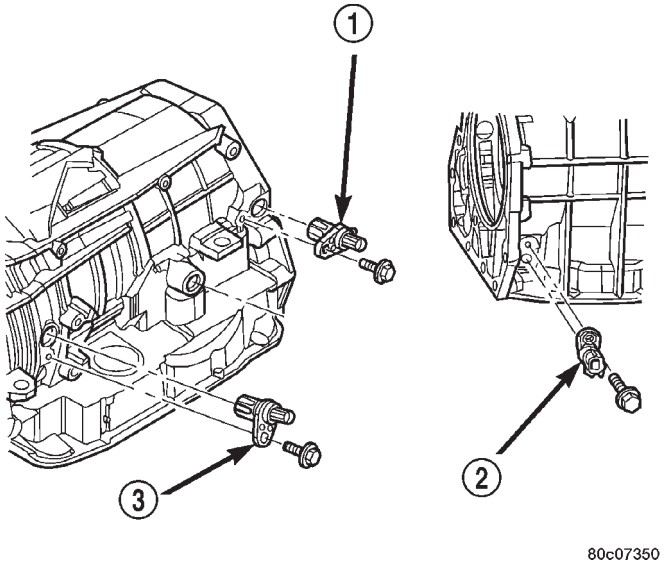

Fig. 83 Input Speed Sensor

1 - OUTPUT SPEED SENSOR
2 - LINE PRESSURE SENSOR
3 - INPUT SPEED SENSOR

INSTALLATION

(1) Install the input speed sensor into the transmission case.

(2) Install the bolt to hold the input speed sensor into the transmission case. Tighten the bolt to 11.9 N·m (105 in.lbs.).

(3) Install the wiring connector onto the input speed sensor

(4) Verify the transmission fluid level. Add fluid as necessary.

(5) Lower vehicle.

LINE PRESSURE (LP) SENSOR

DESCRIPTION

The TCM utilizes a closed-loop system to control transmission line pressure. The system contains a variable force style solenoid, the Pressure Control Solenoid, mounted on the side of the solenoid and pressure switch assembly. The solenoid is duty cycle controlled by the TCM to vent the unnecessary line pressure supplied by the oil pump back to the sump. The system also contains a variable pressure style sensor, the Line Pressure Sensor, which is a direct input to the TCM. The line pressure solenoid monitors the transmission line pressure and completes the feedback loop to the TCM. The TCM uses this information to adjust its control of the pressure control solenoid to achieve the desired line pressure.

OPERATION

The TCM calculates the desired line pressure based upon inputs from the transmission and engine. The TCM calculates the torque input to the transmission and uses that information as the primary input to the calculation. The line pressure is set to a predetermined value during shifts and when the transmission is in the PARK and NEUTRAL positions. This is done to ensure consistent shift quality. During all other operation, the actual line pressure is compared to the desired line pressure and adjustments are made to the pressure control solenoid duty cycle.

REMOVAL

(1) Raise vehicle.

(2) Place a suitable fluid catch pan under the transmission.

(3) Remove the wiring connector from the line pressure sensor (Fig. 84).

(4) Remove the bolt holding the line pressure sensor to the transmission case.

(5) Remove the line pressure sensor from the transmission case.

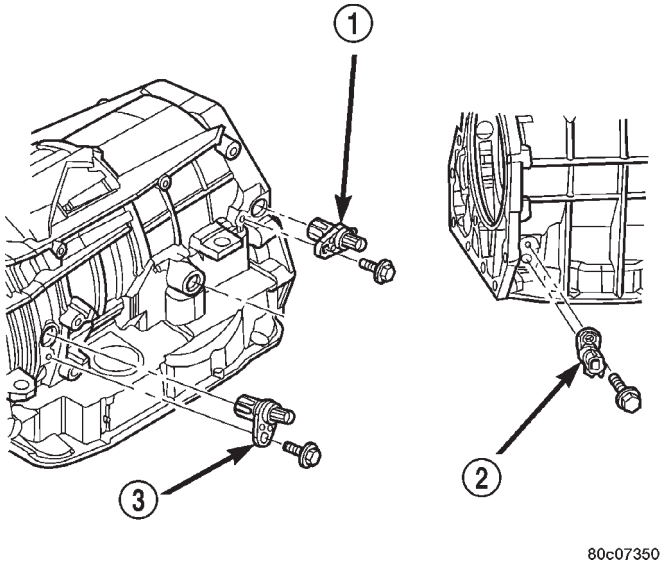

Fig. 84 Line Pressure Sensor

1 - OUTPUT SPEED SENSOR
2 - LINE PRESSURE SENSOR
3 - INPUT SPEED SENSOR

INSTALLATION

(1) Install the line pressure sensor into the transmission case.

(2) Install the bolt to hold the line pressure sensor into the transmission case. Tighten the bolt to 11.9 N·m (105 in.lbs.).

(3) Install the wiring connector onto the line pressure sensor

(4) Verify the transmission fluid level. Add fluid as necessary.

(5) Lower vehicle.

LOW/REVERSE CLUTCH

DISASSEMBLY

(1) Remove the inner overrunning clutch snap-ring from the low/reverse clutch retainer (Fig. 85).

(2) Remove the outer low/reverse reaction plate flat snap-ring (Fig. 85).

(3) Remove the low/reverse clutch and the overrunning clutch from the low/reverse clutch retainer as an assembly (Fig. 85).

(4) Separate the low/reverse clutch from the overrunning clutch.

(5) Remove the overrunning clutch snap-ring (Fig. 86).

(6) Remove the spacer from the overrunning clutch (Fig. 86).

(7) Separate the inner and outer races of the overrunning clutch (Fig. 86).

(8) Remove the overrunning clutch lower snap-ring (Fig. 86).

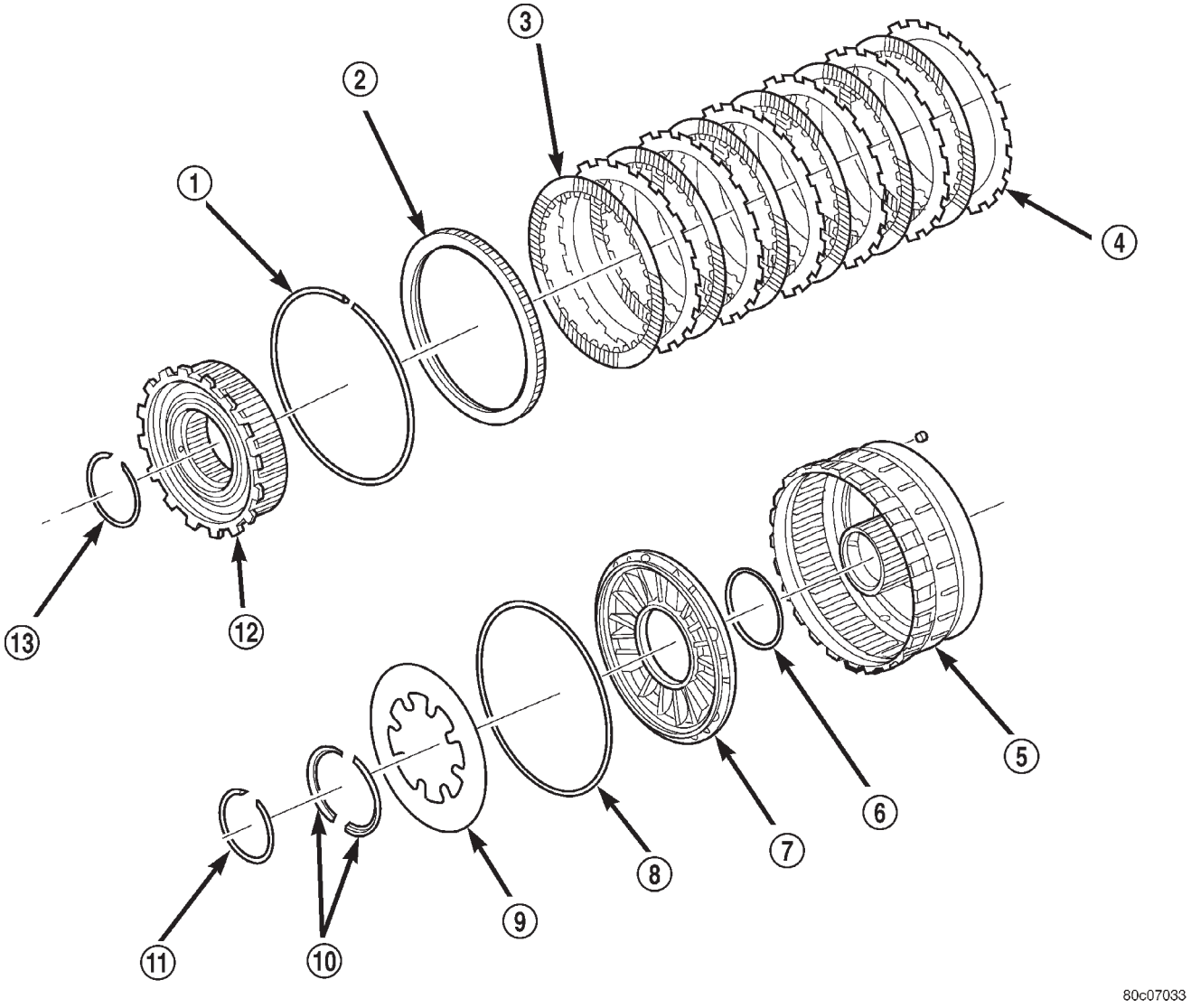

Fig. 85 Low/Reverse Clutch Assembly

1 - SNAP-RING (SELECT)
2 - REACTION PLATE
3 - DISC
4 - PLATE
5 - L/R CLUTCH RETAINER
6 - SEAL
7 - PISTON
8 - SEAL
9 - BELLEVILLE SPRING
10 - RETAINER
11 - SNAP-RING
12 - OVERRUNNING CLUTCH
13 - SNAP-RING

LOW/REVERSE CLUTCH (Continued)

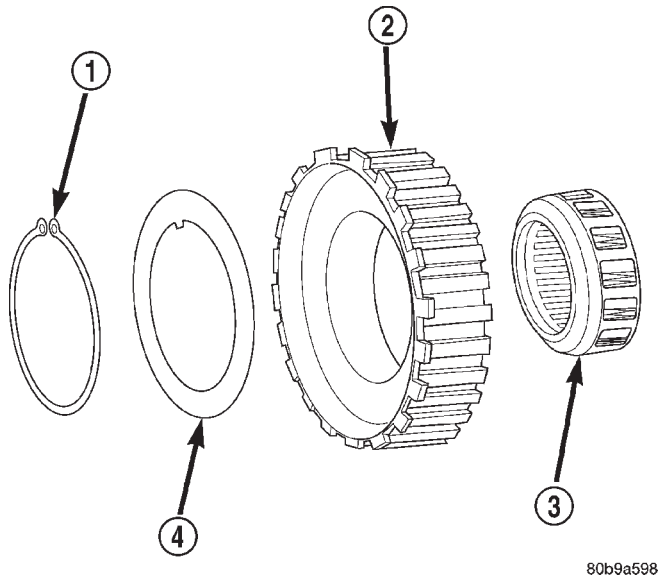

Fig. 86 Overrunning Clutch

1 - SNAP-RING
2 - OUTER RACE
3 - OVERRUNNING CLUTCH
4 - SPACER

(9) Using Spring Compressor 8285 and a suitable shop press (Fig. 87), compress the low/reverse piston Belleville spring and remove the split retaining ring holding the Belleville spring into the low/reverse clutch retainer.

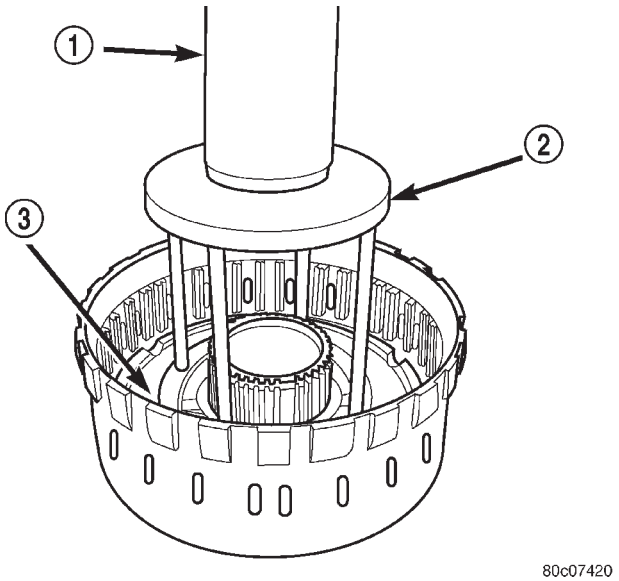

Fig. 87 Compress Low/Reverse Belleville Spring Using Tool 8285

1 - PRESS
2 - TOOL 8285
3 - BELLEVILLE SPRING

(10) Remove the low/reverse clutch Belleville spring and piston from the low/reverse clutch retainer. Use 20 psi of air pressure to remove the piston if necessary.

CLEANING

Clean the overrunning clutch assembly, clutch cam, and low-reverse clutch retainer. Dry them with compressed air after cleaning.

INSPECTION

Inspect condition of each clutch part after cleaning. Replace the overrunning clutch roller and spring assembly if any rollers or springs are worn or damaged, or if the roller cage is distorted, or damaged. Replace the cam if worn, cracked or damaged.

Replace the low-reverse clutch retainer if the clutch race, roller surface or inside diameter is scored, worn or damaged.

ASSEMBLY

(1) Check the bleed orifice to ensure that it is not plugged or restricted.

(2) Install a new seal on the low/reverse piston. Lubricate the seal with Mopar® ATF +4, type 9602, prior to installation.

(3) Install the low/reverse piston into the low/reverse clutch retainer.

(4) Position the low/reverse piston Belleville spring on the low/reverse piston.

(5) Using Spring Compressor 8285 and a suitable shop press (Fig. 87), compress the low/reverse piston Belleville spring and install the split retaining ring to hold the Belleville spring into the low/reverse clutch retainer.

(6) Install the lower overrunning clutch snap-ring (Fig. 86).

(7) Assemble the inner and outer races of the overrunning clutch (Fig. 86).

(8) Position the overrunning clutch spacer on the overrunning clutch.

(9) Install the upper overrunning clutch snap-ring (Fig. 86).

(10) Assemble and install the low/reverse clutch pack into the low/reverse clutch retainer (Fig. 85).

(11) Install the low/reverse reaction plate into the low/reverse clutch retainer (Fig. 85). The reaction plate is directional and must be installed with the flat side down.

(12) Install the low/reverse clutch pack snap-ring (Fig. 85). The snap-ring is selectable and should be chosen to give the correct clutch pack clearance.

(13) Measure the low/reverse clutch pack clearance and adjust as necessary. The correct clutch clearance is 1.14-1.91 mm (0.045-0.075 in.).

LOW/REVERSE CLUTCH (Continued)

(14) Install the overrunning clutch into the low/reverse clutch retainer making sure that the index splines are aligned with the retainer.

(15) Install the overrunning clutch inner snap-ring.

OIL PUMP

DESCRIPTION

The oil pump (Fig. 88) is located at the front of the transmission inside the bell housing and behind the transmission front cover. The oil pump consists of two independent pumps (Fig. 89), a number of valves (Fig. 90), a front seal (Fig. 91), and a bolt on reaction shaft. The converter clutch switch and regulator valves, pressure regulator valve, and converter pressure limit valve are all located in the oil pump housing.

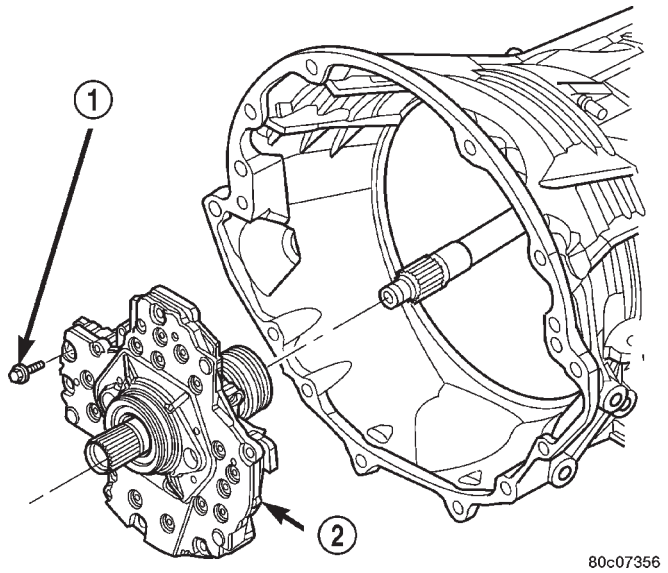

Fig. 88 Oil Pump

1 - OIL PUMP TO CASE BOLT (6)
2 - OIL PUMP

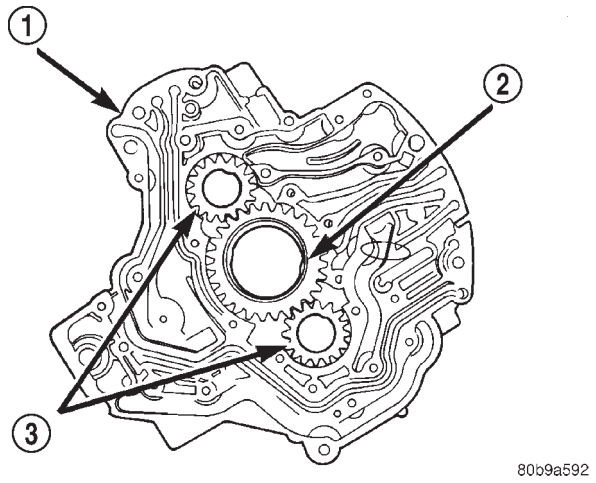

Fig. 89 Oil Pump Gears

1 - PUMP BODY
2 - DRIVE GEAR
3 - DRIVEN GEARS

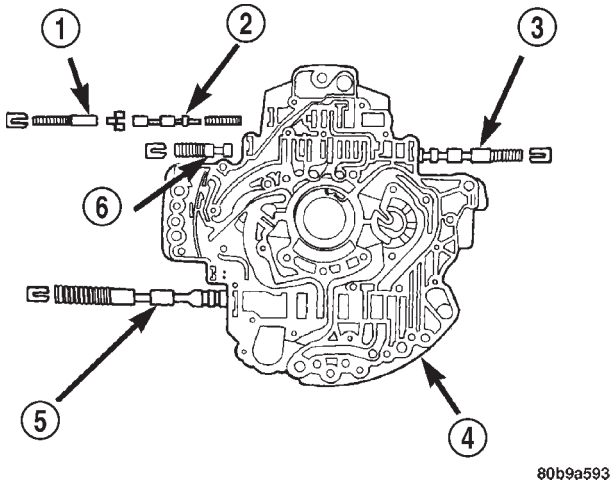

Fig. 90 Oil Pump Valves

1 - TORQUE CONVERTER CLUTCH ACCUMULATOR VALVE
2 - TORQUE CONVERTER CLUTCH CONTROL VALVE
3 - TORQUE CONVERTER CLUTCH SWITCH VALVE
4 - PUMP COVER
5 - PRESSURE REGULATOR VALVE
6 - TORQUE CONVERTER CLUTCH LIMIT VALVE

OIL PUMP (Continued)

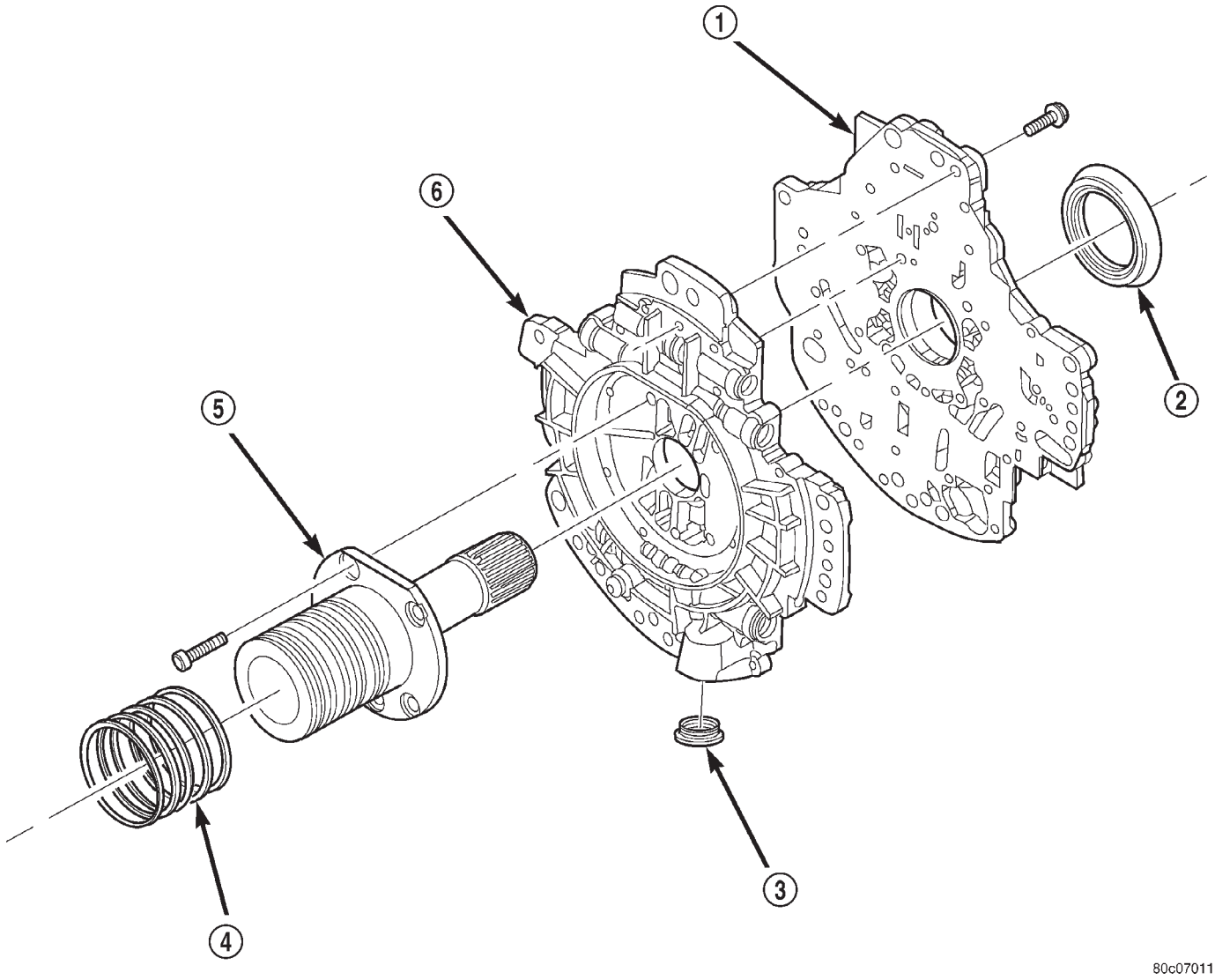

Fig. 91 Oil Pump Reaction Shaft

1 - PUMP HOUSING
2 - SEAL
3 - OIL FILTER SEAL
4 - SEAL RING (5)
5 - REACTION SHAFT SUPPORT
6 - VALVE BODY

OIL PUMP (Continued)

OPERATION

As the torque converter rotates, the converter hub rotates the oil pump drive gear. As the drive gear rotates both driven gears, the clearance between the gear teeth increases in the crescent area, and creates a suction at the inlet side of the pump. This suction draws fluid through the pump inlet from the oil pan. As the clearance between the gear teeth in the crescent area decreases, it forces pressurized fluid into the pump outlet and to the oil pump valves.

At low speeds, both pumps supply fluid to the transmission. As the speed of the torque converter increases, the pressure output of both pumps increases until the primary pump pressure reaches the point where it can close off the check valve located between the two pumps. When the check valve is closed, the secondary pump is shut down and the primary pump supplies all the fluid to the transmission.

CONVERTER CLUTCH SWITCH VALVE

The converter clutch switch valve is used to control the hydraulic pressure supplied to the front (OFF) side of the torque converter clutch.

CONVERTER CLUTCH REGULATOR VALVE

The converter clutch regulator valve is used to control the hydraulic pressure supplied to the back (ON) side of the torque converter clutch.

TORQUE CONVERTER LIMIT VALVE

The torque converter limit valve serves to limit the available line pressure to the torque converter clutch to approximately 120 psi.

STANDARD PROCEDURES - OIL PUMP VOLUME CHECK

Measuring the oil pump output volume will determine if sufficient oil flow to the transmission oil cooler exists, and whether or not an internal transmission failure is present.

Verify that the transmission fluid is at the proper level. Refer to the Fluid Level Check procedure in this section. If necessary, fill the transmission to the proper level with Mopar® ATF +4, type 9602, Automatic Transmission Fluid.

(1) Disconnect the **To cooler** line at the cooler inlet and place a collecting container under the disconnected line.

CAUTION: With the fluid set at the proper level, fluid collection should not exceed (1) quart or internal damage to the transmission may occur.

(2) Run the engine **at 1800 rpm**, with the shift selector in neutral. Verify that the transmission fluid temperature is below 104.5° C (220° F) for this test.

(3) If one quart of transmission fluid is collected in the container in 30 seconds or less, oil pump flow volume is within acceptable limits. If fluid flow is intermittent, or it takes more than 30 seconds to collect one quart of fluid, refer to the Hydraulic Pressure tests in this section for further diagnosis.

(4) Re-connect the **To cooler** line to the transmission cooler inlet.

(5) Refill the transmission to proper level.

DISASSEMBLY

(1) Remove the bolts holding the reaction shaft support to the oil pump (Fig. 92).

(2) Remove the reaction shaft support from the oil pump (Fig. 92).

(3) Remove all bolts holding the oil pump halves together (Fig. 92).

(4) Using suitable prying tools, separate the oil pump sections by inserting the tools in the supplied areas and prying the halves apart.

NOTE: The oil pump halves are aligned to each other through the use of two dowels. Be sure to pry upward evenly to prevent damage to the oil pump components.

(5) Remove the screws holding the separator plate onto the oil pump body (Fig. 93).

(6) Remove the separator plate from the oil pump body (Fig. 93).

(7) Mark all gears for location. The gears are select fit and if the oil pump is to be reused, the gears must be returned to their original locations.

(8) Remove the oil pump gears from the oil pump case (Fig. 93).

(9) Remove the oil pump valve retainers and associated valve and spring one at a time (Fig. 94) (Fig. 95). Mark the combination of components as a group and tag them as to the location from which they were removed.

CLEANING

Clean pump and support components with solvent and dry them with compressed air.

INSPECTION

Check condition of the seal rings and thrust washer on the reaction shaft support. The seal rings do not need to be replaced unless cracked, broken, or severely worn.

Inspect the pump and support components. Replace the pump or support if the seal ring grooves or machined surfaces are worn, scored, pitted, or dam-

OIL PUMP (Continued)

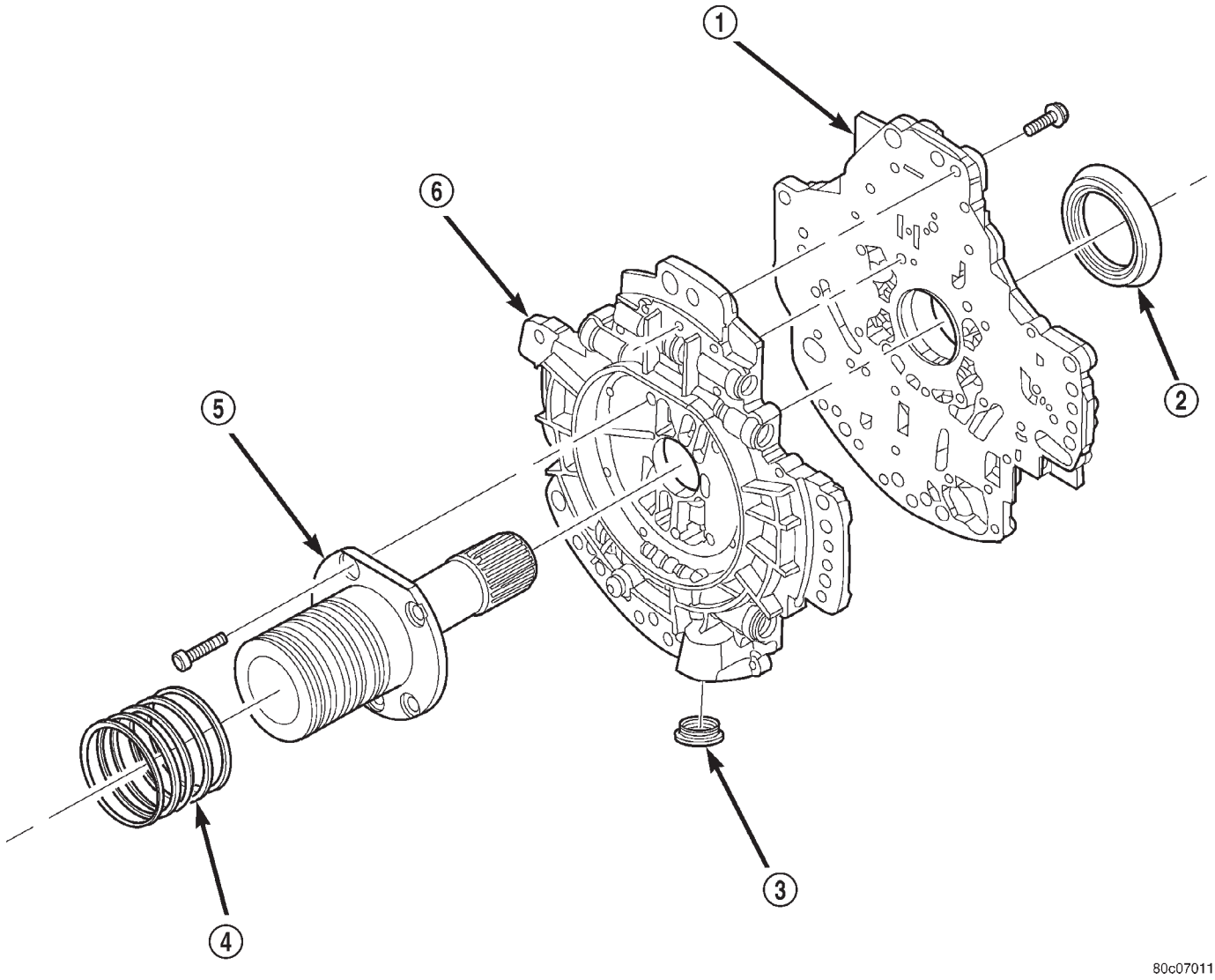

Fig. 92 Oil Pump Assembly

1 - PUMP HOUSING
2 - SEAL
3 - OIL FILTER SEAL
4 - SEAL RING (5)
5 - REACTION SHAFT SUPPORT
6 - VALVE BODY

aged. Replace the pump gears if pitted, worn chipped, or damaged.

Inspect the pump bushing. Then check the reaction shaft support bushing. Replace either bushing only if heavily worn, scored or damaged. It is not necessary to replace the bushings unless they are actually damaged.

Inspect the valves and plugs for scratches, burrs, nicks, or scores. Minor surface scratches on steel valves and plugs can be removed with crocus cloth but **do not round off the edges of the valve or plug lands.** Maintaining sharpness of these edges is vitally important. The edges prevent foreign matter from lodging between the valves and plugs and the bore.

Inspect all the valve and plug bores in the oil pump cover. Use a penlight to view the bore interiors. Replace the oil pump if any bores are distorted or scored. Inspect all of the valve springs. The springs must be free of distortion, warpage or broken coils.

Trial fit each valve and plug in its bore to check freedom of operation. When clean and dry, the valves and plugs should drop freely into the bores.

ASSEMBLY

(1) Clean and inspect all components. Make sure that all passages are thoroughly cleaned and are free from dirt or debris. Make sure that all valves move

OIL PUMP (Continued)

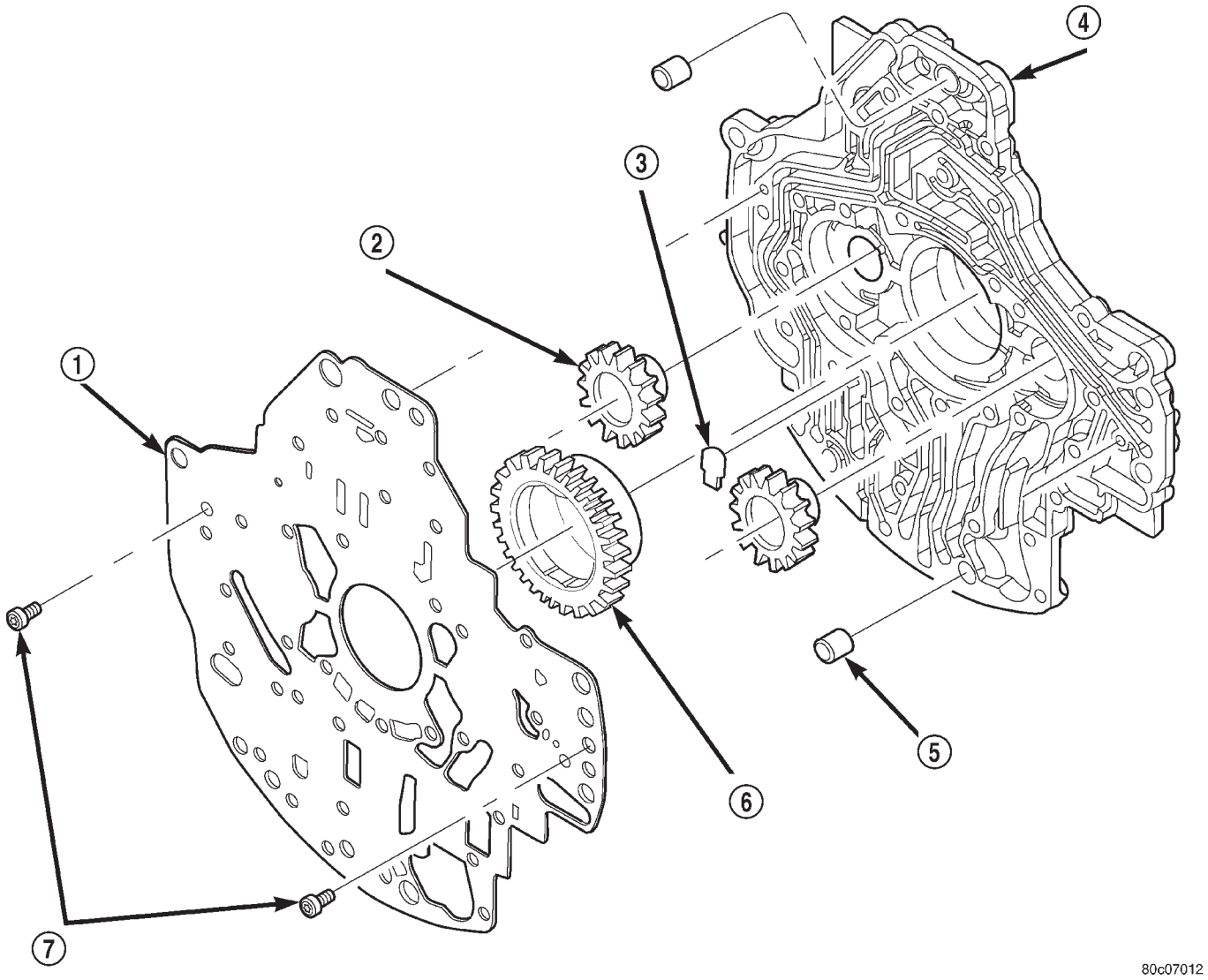

Fig. 93 Oil Pump Housing and Gears

1 - SEPARATOR PLATE
2 - DRIVEN GEAR (2)
3 - CHECK VALVE
4 - PUMP HOUSING
5 - DOWEL (2)
6 - DRIVE GEAR
7 - SCREW

freely in their proper bore. Make sure that all gear pockets and bushings are free from excessive wear and scoring. Replace the oil pump if any excessive wear or scoring is found.

(2) Coat the gears with Mopar® ATF +4, type 9602, and install into their original locations.

(3) Lubricate the oil pump valves with Mopar® ATF +4, type 9602, and install the valve, spring and retainer into the appropriate oil pump valve body bore (Fig. 94) (Fig. 95).

(4) Place the separator plate onto the oil pump body (Fig. 93).

(5) Install the screws to hold the separator plate onto the oil pump body (Fig. 93). Tighten the screws to 4.5 N·m (40 in.lbs.).

(6) Position the oil pump cover onto the locating dowels (Fig. 92).

(7) Seat the two oil pump halves together and install all bolts finger tight.

(8) Torque all bolts down slowly starting in the center and working outward. The correct torque is 4.5 N·m (40 in.lbs.).

(9) Verify that the oil pump gears rotate freely and smoothly.

(10) Position the reaction shaft support into the oil pump (Fig. 92).

OIL PUMP (Continued)

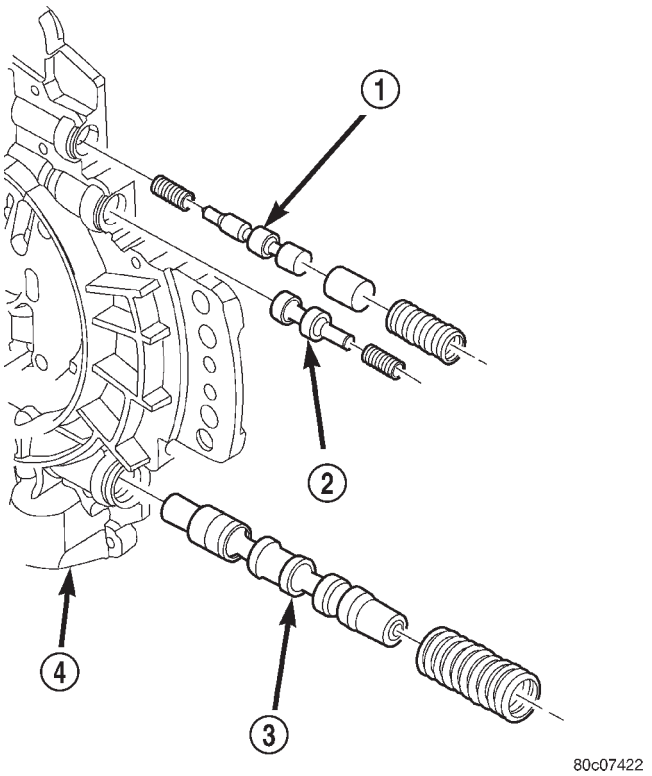

Fig. 94 Oil Pump Valve Body

1 - T/C REGULATOR VALVE
2 - T/C LIMIT VALVE
3 - REGULATOR VALVE
4 - OIL PUMP VALVE BODY

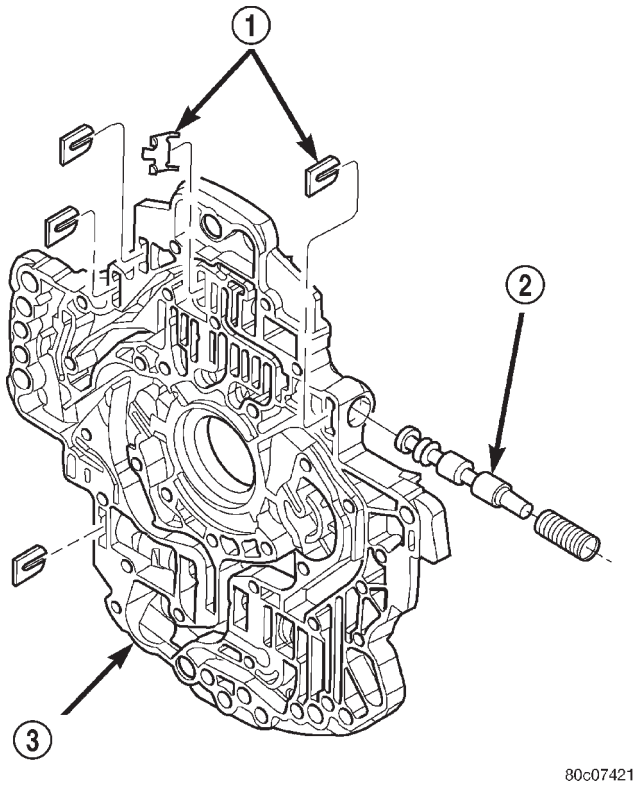

Fig. 95 T/C Switch Valve

1 - RETAINER
2 - T/C SWITCH VALVE
3 - OIL PUMP VALVE BODY

(11) Install and torque the bolts to hold the reaction shaft support to the oil pump (Fig. 92). The correct torque is 12 N·m (105 in.lbs.).

OIL PUMP FRONT SEAL

REMOVAL

(1) Remove transmission from the vehicle.

(2) Remove the torque converter from the transmission.

(3) Using a screw mounted in a slide hammer, remove the oil pump front seal.

INSTALLATION

(1) Clean seal bore of the oil pump of any residue or particles from the original seal.

(2) Install new oil seal in the oil pump housing using Seal Installer C-3860-A (Fig. 96).

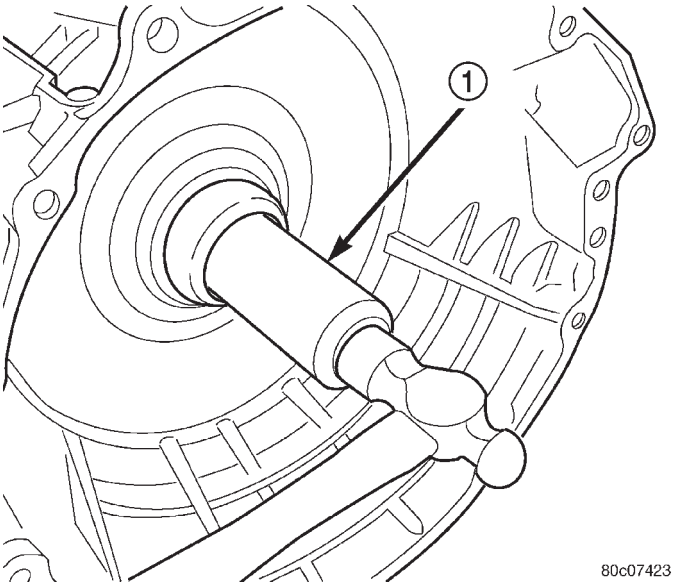

Fig. 96 Install Oil Pump Front Seal

1 - TOOL C-3860-A

OUTPUT SPEED SENSOR

DESCRIPTION

The Input and Output Speed Sensors are two-wire magnetic pickup devices that generate AC signals as rotation occurs. They are mounted in the left side of the transmission case and are considered primary inputs to the Transmission Control Module (TCM).

OPERATION

The Input Speed Sensor provides information on how fast the input shaft is rotating. As the teeth of the input clutch hub pass by the sensor coil, an AC voltage is generated and sent to the TCM. The TCM interprets this information as input shaft rpm.

The Output Speed Sensor generates an AC signal in a similar fashion, though its coil is excited by rotation of the rear planetary carrier lugs. The TCM interprets this information as output shaft rpm.

The TCM compares the input and output speed signals to determine the following:

- Transmission gear ratio
- Speed ratio error detection
- CVI calculation

The TCM also compares the input speed signal and the engine speed signal to determine the following:

- Torque converter clutch slippage
- Torque converter element speed ratio

REMOVAL

(1) Raise vehicle.

(2) Place a suitable fluid catch pan under the transmission.

(3) Remove the wiring connector from the output speed sensor (Fig. 97).

(4) Remove the bolt holding the output speed sensor to the transmission case.

(5) Remove the output speed sensor from the transmission case.

INSTALLATION

(1) Install the output speed sensor into the transmission case.

(2) Install the bolt to hold the output speed sensor into the transmission case. Tighten the bolt to 11.9 N·m (105 in.lbs.).

(3) Install the wiring connector onto the output speed sensor

(4) Verify the transmission fluid level. Add fluid as necessary.

(5) Lower vehicle.

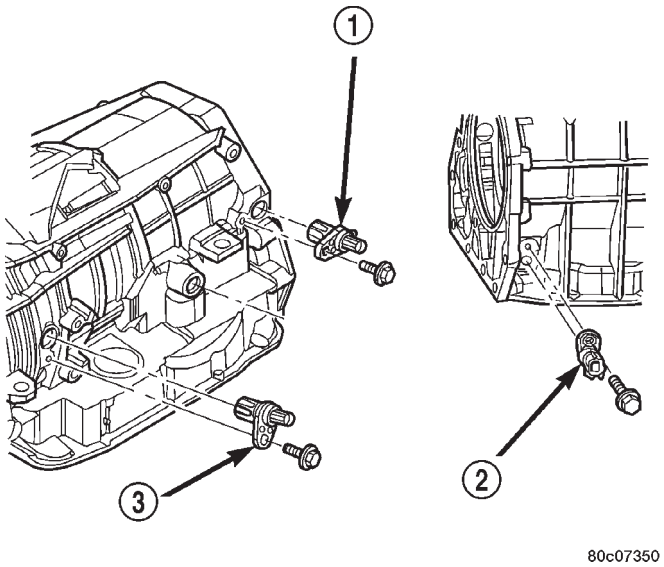

Fig. 97 Output Speed Sensor

1 - OUTPUT SPEED SENSOR
2 - LINE PRESSURE SENSOR
3 - INPUT SPEED SENSOR

OVERDRIVE SWITCH

DESCRIPTION

The overdrive OFF (control) switch is located in the shifter handle. The switch is a momentary contact device that signals the PCM to toggle current status of the overdrive function.

OPERATION

At key-on, fourth and fifth gear operation is allowed. Pressing the switch once causes the overdrive OFF mode to be entered and the overdrive OFF switch lamp to be illuminated. Pressing the switch a second time causes normal overdrive operation to be restored and the overdrive lamp to be turned off. The overdrive OFF mode defaults to ON after the ignition switch is cycled OFF and ON. The normal position for the control switch is the ON position. The switch must be in this position to energize the solenoids and allow upshifts to fourth and fifth gears. The control switch indicator light illuminates only when the overdrive switch is turned to the OFF position, or when illuminated by the transmission control module.

PISTONS

DESCRIPTION

There are several sizes and types of pistons used in an automatic transmission. Some pistons are used to apply clutches, while others are used to apply bands. They all have in common the fact that they are

PISTONS (Continued)

round or circular in shape, located within a smooth walled cylinder, which is closed at one end and converts fluid pressure into mechanical movement. The fluid pressure exerted on the piston is contained within the system through the use of piston rings or seals.

OPERATION

The principal which makes this operation possible is known as Pascal's Law. Pascal's Law can be stated as: "Pressure on a confined fluid is transmitted equally in all directions and acts with equal force on equal areas."

PRESSURE

Pressure (Fig. 98) is nothing more than force (lbs.) divided by area (in or ft.), or force per unit area. Given a 100 lb. block and an area of 100 sq. in. on the floor, the pressure exerted by the block is: 100 lbs. 100 in or 1 pound per square inch, or PSI as it is commonly referred to.

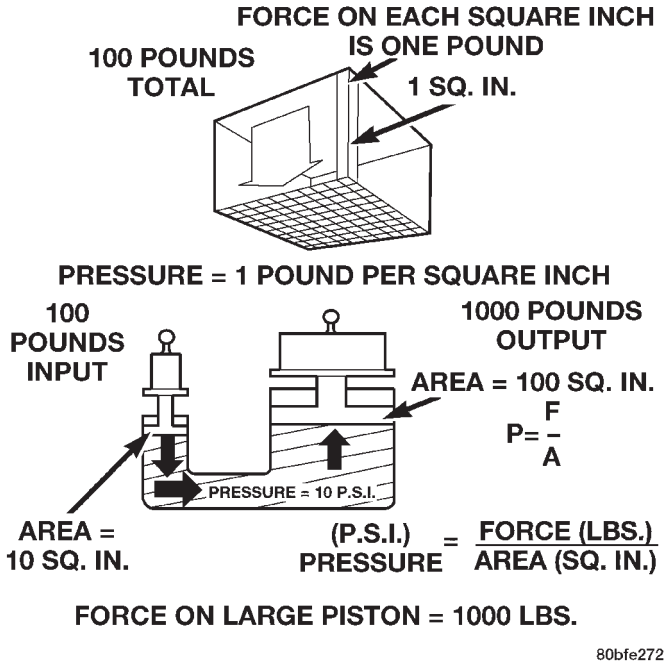

Fig. 98 Force and Pressure Relationship

PRESSURE ON A CONFINED FLUID

Pressure is exerted on a confined fluid (Fig. 99) by applying a force to some given area in contact with the fluid. A good example of this is a cylinder filled with fluid and equipped with a piston that is closely fitted to the cylinder wall. If a force is applied to the piston, pressure will be developed in the fluid. Of course, no pressure will be created if the fluid is not confined. It will simply "leak" past the piston. There must be a resistance to flow in order to create pressure. Piston sealing is extremely important in hydraulic operation. Several kinds of seals are used to accomplish this within a transmission. These include but are not limited to O-rings, D-rings, lip seals, sealing rings, or extremely close tolerances between the piston and the cylinder wall. The force exerted is downward (gravity), however, the principle remains the same no matter which direction is taken. The pressure created in the fluid is equal to the force applied, divided by the piston area. If the force is 100 lbs., and the piston area is 10 sq. in., then the pressure created equals 10 PSI. Another interpretation of Pascal's Law is that regardless of container shape or size, the pressure will be maintained throughout, as long as the fluid is confined. In other words, the pressure in the fluid is the same everywhere within the container.

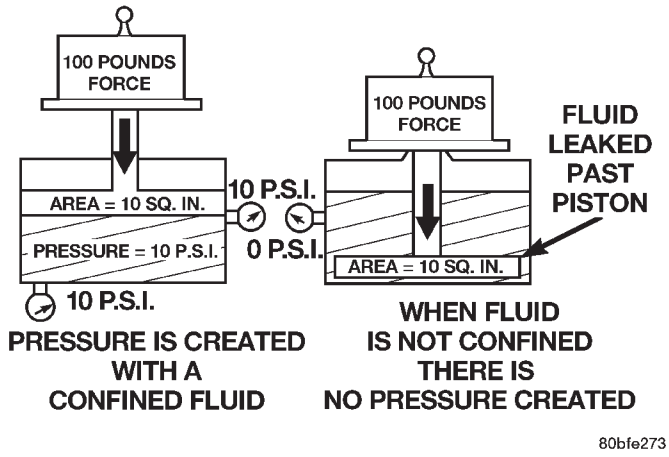

Fig. 99 Pressure on a Confined Fluid

PISTONS (Continued)

FORCE MULTIPLICATION

Using the 10 PSI example used in the illustration (Fig. 100), a force of 1000 lbs. can be moved with a force of only 100 lbs. The secret of force multiplication in hydraulic systems is the total fluid contact area employed. The illustration, (Fig. 100), shows an area that is ten times larger than the original area. The pressure created with the smaller 100 lb. input is 10 PSI. The concept "pressure is the same everywhere" means that the pressure underneath the larger piston is also 10 PSI. Pressure is equal to the force applied divided by the contact area. Therefore, by means of simple algebra, the output force may be found. This concept is extremely important, as it is also used in the design and operation of all shift valves and limiting valves in the valve body, as well as the pistons, of the transmission, which activate the clutches and bands. It is nothing more than using a difference of area to create a difference in pressure to move an object.

PISTON TRAVEL

The relationship between hydraulic lever and a mechanical lever is the same. With a mechanical lever it's a weight-to-distance output rather than a pressure-to-area output. Using the same forces and areas as in the previous example, the smaller piston (Fig. 101) has to move ten times the distance required to move the larger piston one inch. Therefore, for every inch the larger piston moves, the smaller piston moves ten inches. This principle is true in other instances also. A common garage floor jack is a good example. To raise a car weighing 2000 lbs., an effort of only 100 lbs. may be required. For every inch the car moves upward, the input piston at the jack handle must move 20 inches downward.

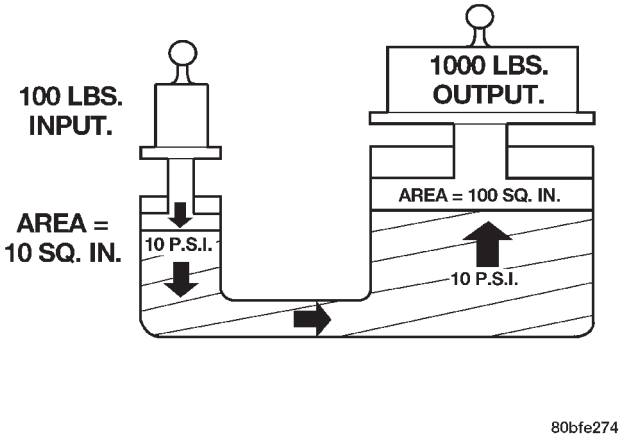

Fig. 100 Force Multiplication

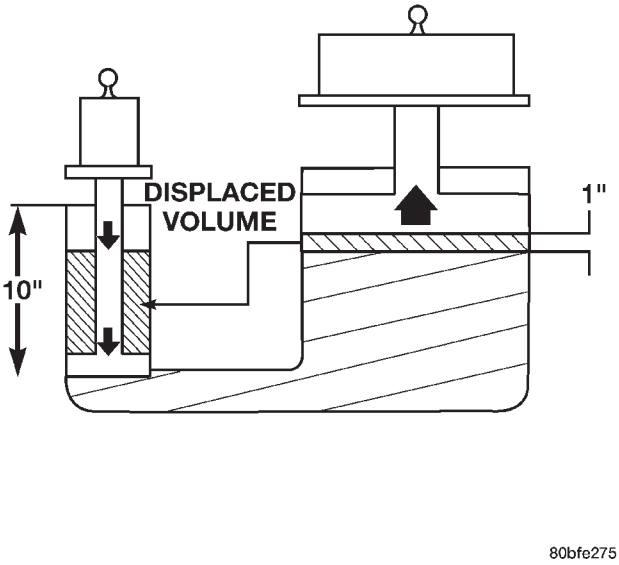

Fig. 101 Piston Travel

PLANETARY GEARTRAIN

DESCRIPTION

The planetary geartrain is located behind the 4C retainer/bulkhead, toward the rear of the transmission. The planetary geartrain consists of three primary assemblies:

- Reaction (Fig. 102).
- Reverse (Fig. 103).
- Input (Fig. 103).

OPERATION

REACTION PLANETARY GEARTRAIN

The reaction planetary carrier and reverse sun gear of the reaction planetary geartrain are a single component which is held by the 2C clutch when required. The reaction annulus gear is a stand alone component that can be driven by the reverse clutch or held by the 4C clutch. The reaction sun gear is driven by the overdrive clutch.

REVERSE PLANETARY GEARTRAIN

The reverse planetary geartrain is the middle of the three planetary sets. The reverse planetary carrier can be driven by the overdrive clutch as required. The reverse planetary carrier is also splined to the input annulus gear, which can be held by the low/reverse clutch. The reverse planetary annulus, input planetary carrier, and output shaft are all one piece.

INPUT PLANETARY GEARTRAIN

The input sun gear of the input planetary geartrain is driven by the underdrive clutch.

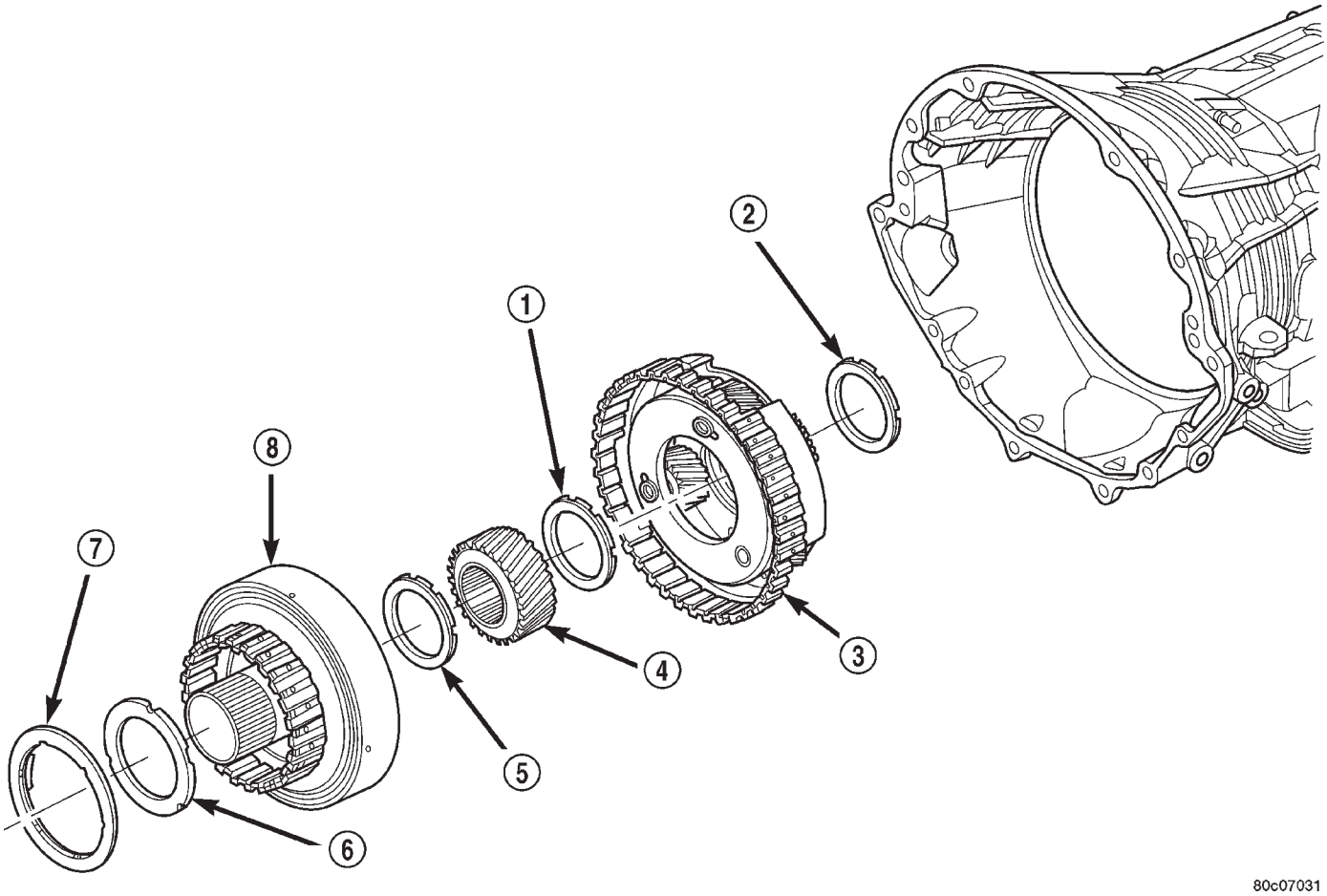

Fig. 102 Reaction Planetary Geartrain

1 - BEARING NUMBER 8
2 - BEARING NUMBER 9
3 - REACTION PLANETARY CARRIER
4 - REACTION SUN GEAR
5 - BEARING NUMBER 7
6 - THRUST PLATE
7 - BEARING NUMBER 6
8 - REACTION ANNULUS

PLANETARY GEARTRAIN (Continued)

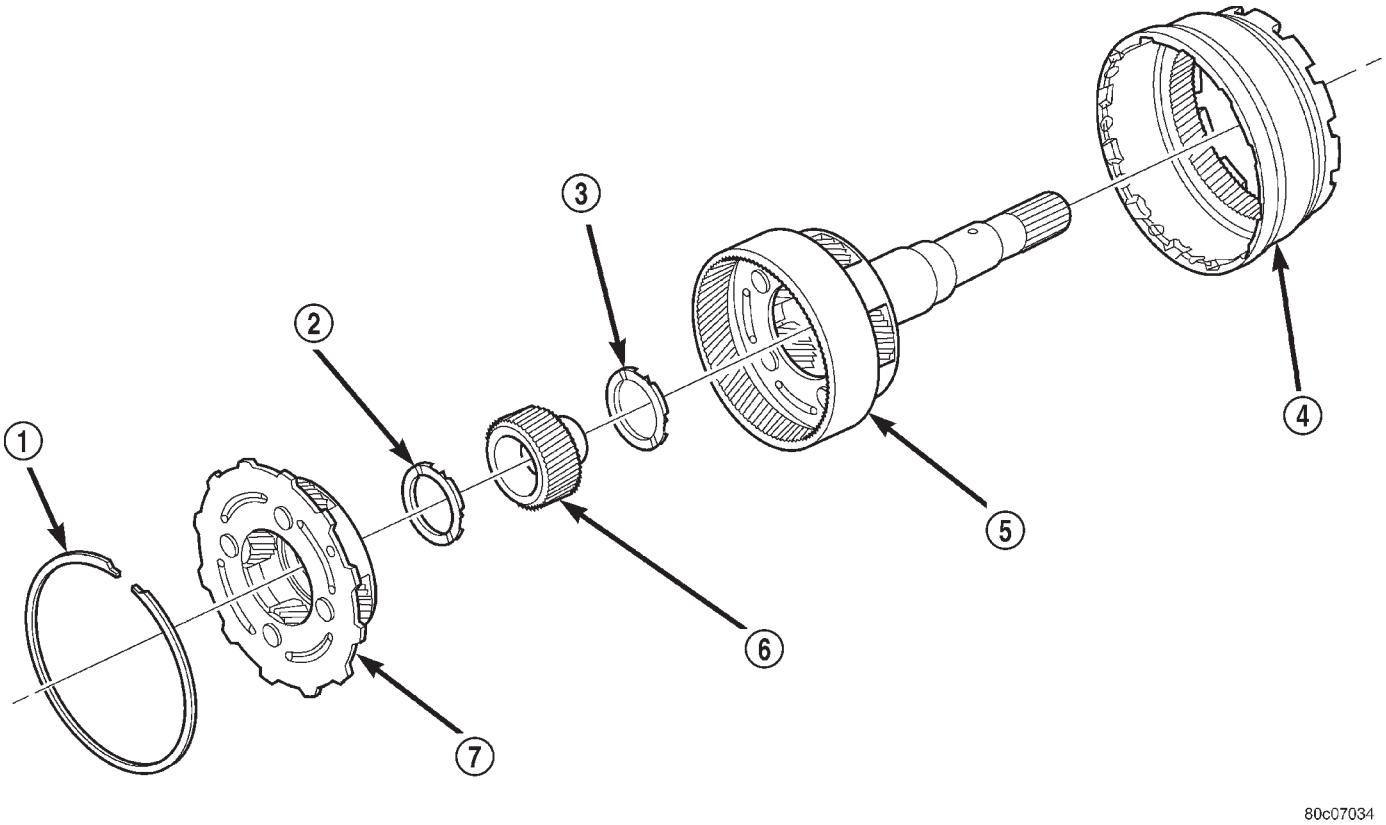

Fig. 103 Reverse/Input Planetary Geartrain

1 - SNAP-RING
2 - BEARING NUMBER 10
3 - BEARING NUMBER 11
4 - INPUT ANNULUS
5 - INPUT PLANETARY CARRIER
6 - INPUT SUN GEAR
7 - REVERSE PLANETARY CARRIER

DISASSEMBLY

(1) Remove the snap-ring holding the input annulus into the input carrier (Fig. 104).

(2) Remove the input annulus from the input carrier (Fig. 104).

(3) Remove the number 9 bearing from the reverse planetary carrier. Note that this planetary carrier has four pinion gears.

(4) Remove the reverse planetary gear carrier (Fig. 104).

(5) Remove the number 10 bearing from the input sun gear (Fig. 104).

(6) Remove the input sun gear from the input carrier (Fig. 104).

(7) Remove the number 11 bearing from the input carrier (Fig. 104).

CLEANING

Clean the planetary components in solvent and dry them with compressed air.

INSPECTION

Check sun gear and driving shell condition. Replace the gear if damaged or if the bushings are scored or worn. The bushings are not serviceable. Replace the driving shell if worn, cracked or damaged.

Replace planetary gear sets if gears, pinion pins, or carrier are damaged in any way. Replace the annulus gears and supports if either component is worn or damaged.

Replace the output shaft if the machined surfaces are scored, pitted, or damaged in any way. Also replace the shaft if the splines are damaged, or exhibits cracks at any location.

ASSEMBLY

(1) Clean and inspect all components. Replace any components which show evidence of excessive wear or scoring.

(2) Install the number 11 bearing into the input planetary carrier with the flat side up and facing forward (Fig. 104).

PLANETARY GEARTRAIN (Continued)

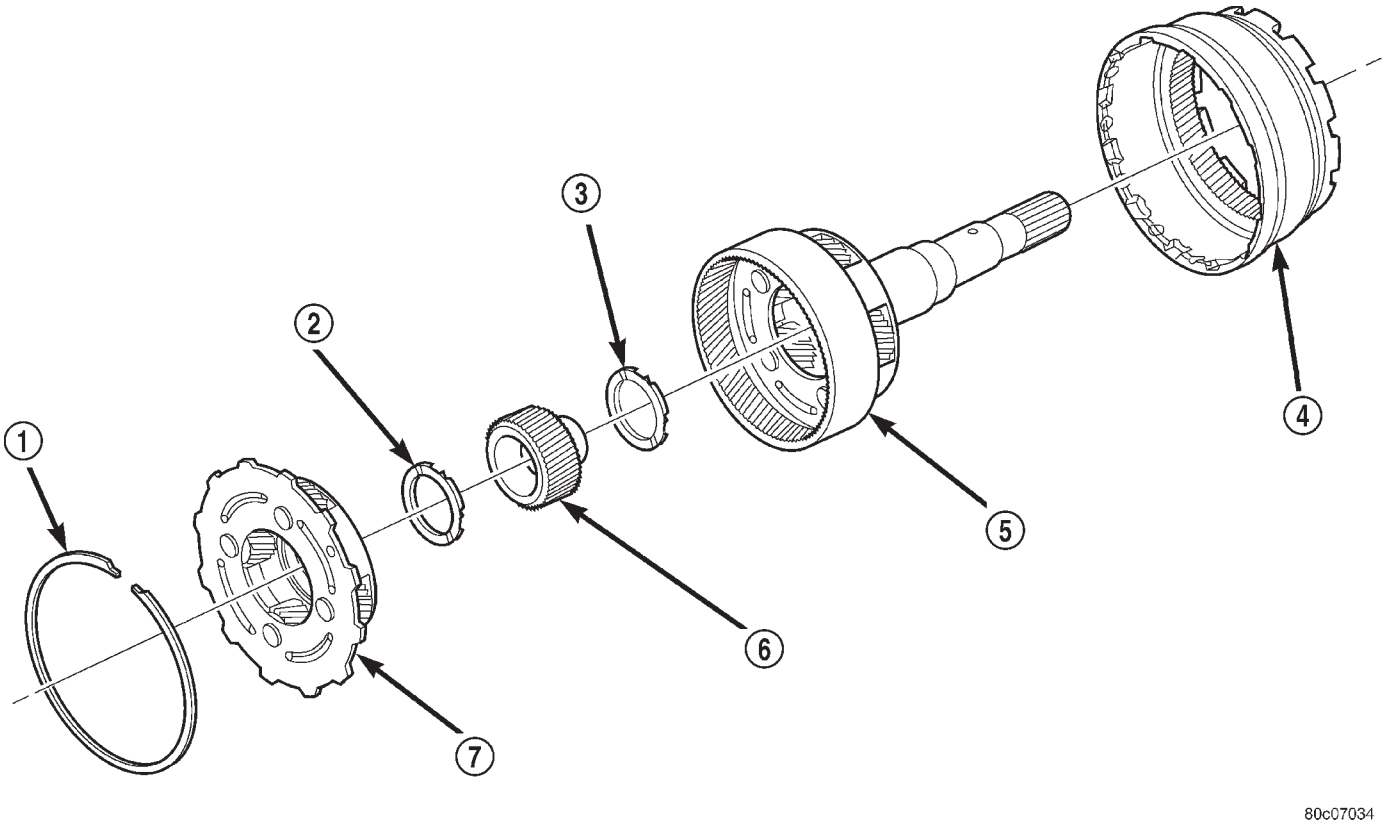

Fig. 104 Reverse/Input Planetary Carrier Assembly

1 - SNAP-RING
2 - BEARING NUMBER 10
3 - BEARING NUMBER 11
4 - INPUT ANNULUS
5 - INPUT PLANETARY CARRIER
6 - INPUT SUN GEAR
7 - REVERSE PLANETARY CARRIER

(3) Install the input sun gear into the input carrier (Fig. 104).

(4) Install the number 10 bearing onto the rear of the reverse planetary carrier with the flat side toward the carrier (Fig. 104).

(5) Install the number 9 bearing onto the front of the reverse planetary carrier with the rounded side toward the carrier and the flat side facing upward (Fig. 104).

(6) Install the reverse planetary gear carrier into the input carrier (Fig. 104).

(7) Install the input annulus gear into the input carrier (Fig. 104).

(8) Install the snap-ring to hold the input annulus gear into the input carrier (Fig. 104).

SHIFT MECHANISM

DESCRIPTION

The gear shift mechanism provides six shift positions which are:

- Park (P)
- Reverse (R)
- Neutral (N)
- Drive (D)
- Manual second (2)
- Manual low (1)

OPERATION

MANUAL LOW (1) range provides FIRST gear only. Overrun braking is also provided in this range. MANUAL SECOND (2) range provides FIRST and SECOND gear only.

DRIVE range provides FIRST, SECOND, THIRD and OVERDRIVE FOURTH and FIFTH gear ranges. The shift into OVERDRIVE FOURTH and FIFTH gear range occurs only after the transmission has completed the shift into D THIRD gear range. No further movement of the shift mechanism is required to complete the 3-4 or 4-5 shifts.

The FOURTH and FIFTH gear upshifts occurs automatically when the overdrive selector switch is in the ON position. An upshift to FOURTH and FIFTH gears may not occur or may be delayed in

SHIFT MECHANISM (Continued)

some of the possible shift schedules. (Refer to 8 - ELECTRICAL/ELECTRONIC CONTROL MODULES/TRANSMISSION CONTROL MODULE - OPERATION)

REMOVAL

(1) Remove any necessary console parts for access to shift lever assembly and shifter cables. (Refer to 23 - BODY/INTERIOR/FLOOR CONSOLE - REMOVAL)

(2) Shift transmission into PARK.

(3) Disconnect the transmission shift cable at shift lever and shifter assembly bracket (Fig. 105).

(4) Disconnect the brake transmission interlock cable (Fig. 106) from the shifter BTSI lever and the shifter assembly bracket.

(5) Disconnect the transfer case shift cable from the transfer case shift lever pin (Fig. 107).

(6) Remove the clip holding the transfer case shift cable to the shifter assembly bracket.

(7) Remove the transfer case shift cable from the shifter assembly bracket.

(8) Disengage all wiring connectors from the shifter assembly.

(9) Remove all nuts holding the shifter assembly to the floor pan (Fig. 108).

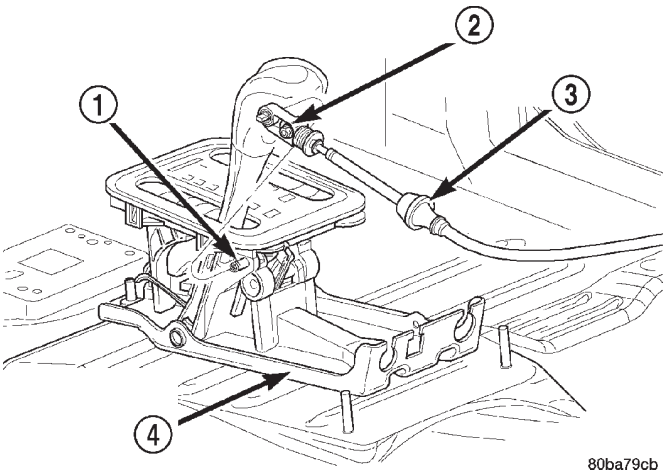

Fig. 105 Transmission Shift Cable

1 - SHIFT LEVER PIN
2 - ADJUSTMENT SCREW
3 - SHIFT CABLE
4 - SHIFTER ASSEMBLY BRACKET

(10) Remove the shifter assembly from the vehicle.

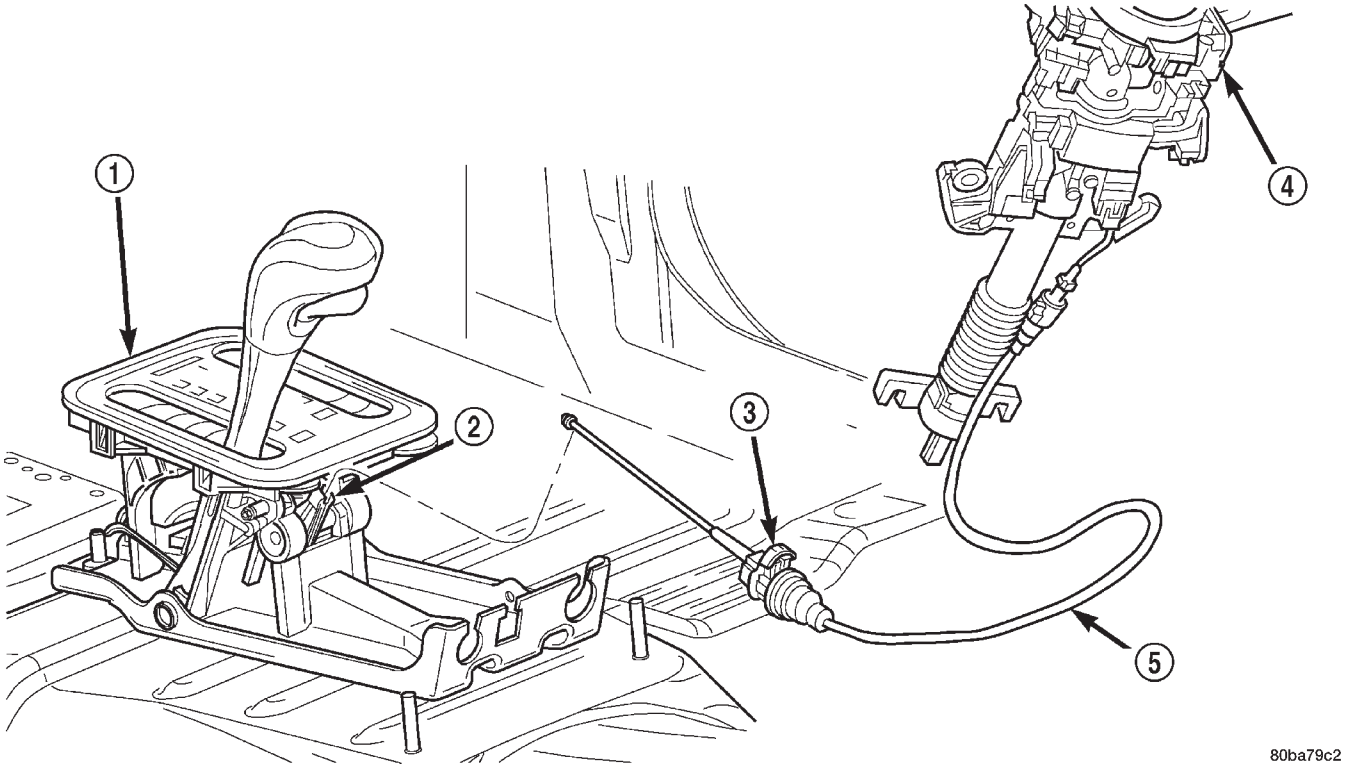

Fig. 106 Brake Transmission Interlock Cable

1 - SHIFT MECHANISM
2 - SHIFTER BTSI LEVER
3 - ADJUSTMENT CLIP
4 - STEERING COLUMN ASSEMBLY
5 - INTERLOCK CABLE

SHIFT MECHANISM (Continued)

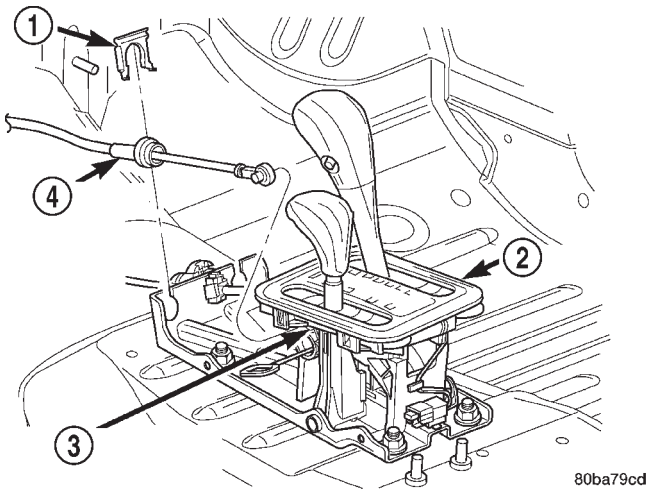

Fig. 107 Transfer Case Shift Cable

1 - CLIP
2 - SHIFTER
3 - TRANSFER CASE SHIFT LEVER PIN
4 - TRANSFER CASE SHIFT CABLE

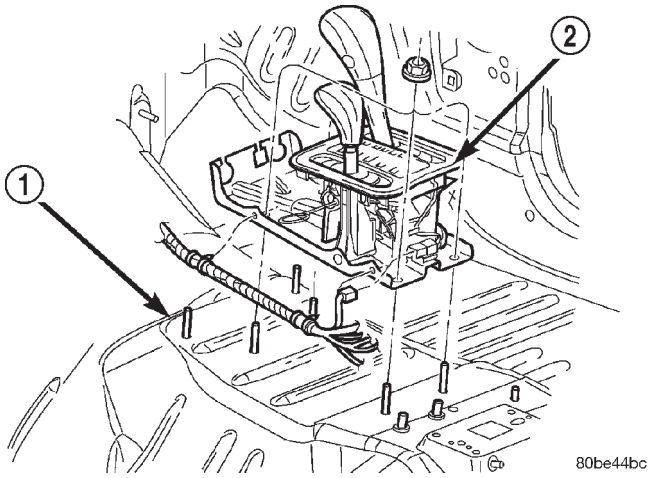

Fig. 108 Shifter Assembly

1 - FLOOR PAN
2 - SHIFTER ASSEMBLY

INSTALLATION

(1) Install shifter assembly onto the shifter assembly studs on the floor pan.

(2) Install the nuts to hold the shifter assembly onto the floor pan. Tighten nuts to 28 N·m (250 in.lbs.).

(3) Install wiring harness to the shifter assembly bracket. Engage any wire connectors removed from the shifter assembly.

(4) Install the transfer case shift cable to the shifter assembly bracket. Install clip to hold cable to the bracket.

(5) Snap the transfer case shift cable onto the transfer case shift lever pin.

(6) Install the brake transmission interlock cable into the shifter assembly bracket and into the shifter BTSI lever.(Refer to 21 - TRANSMISSION/TRANSAXLE/AUTOMATIC/SHIFT INTERLOCK MECHANISM - ADJUSTMENTS)

(7) Install the shift cable to the shifter assembly bracket. Push cable into the bracket until secure.

(8) Place the floor shifter lever in park position.

(9) Loosen the adjustment screw on the shift cable.

(10) Snap the shift cable onto the shift lever pin.

(11) Verify that the shift lever is in the PARK position.

(12) Tighten the adjustment screw to 7 N·m (65 in.lbs.).

(13) Verify correct shifter operation.

(14) Install any console parts removed for access to shift lever assembly and shift cables. (Refer to 23 - BODY/INTERIOR/FLOOR CONSOLE - INSTALLATION)

SOLENOID SWITCH VALVE

DESCRIPTION

The Solenoid Switch Valve (SSV) is located in the valve body and controls the direction of the transmission fluid when the L/R-TCC solenoid is energized.

OPERATION

The Solenoid Switch Valve controls line pressure from the LR-TCC solenoid. In 1st gear, the SSV will be in the downshifted position, thus directing fluid to the L/R clutch circuit. In 2nd, 3rd, 4th,and 5th gears, the solenoid switch valve will be in the upshifted position and directs the fluid into the torque converter clutch (TCC) circuit.

When shifting into 1st gear, a special hydraulic sequence is performed to ensure SSV movement into the downshifted position. The L/R pressure switch is monitored to confirm SSV movement. If the movement is not confirmed (the L/R pressure switch does not close), 2nd gear is substituted for 1st. A DTC will be set after three unsuccessful attempts are made to get into 1st gear in one given key start.

SOLENOIDS

DESCRIPTION

The typical electrical solenoid used in automotive applications is a linear actuator. It is a device that produces motion in a straight line. This straight line motion can be either forward or backward in direction, and short or long distance.

A solenoid is an electromechanical device that uses a magnetic force to perform work. It consists of a coil of wire, wrapped around a magnetic core made from steel or iron, and a spring loaded, movable plunger, which performs the work, or straight line motion.

The solenoids used in transmission applications are attached to valves which can be classified as **normally open** or **normally closed**. The **normally open** solenoid valve is defined as a valve which allows hydraulic flow when no current or voltage is applied to the solenoid. The **normally closed** solenoid valve is defined as a valve which does not allow hydraulic flow when no current or voltage is applied to the solenoid. These valves perform hydraulic control functions for the transmission and must therefore be durable and tolerant of dirt particles. For these reasons, the valves have hardened steel poppets and ball valves. The solenoids operate the valves directly, which means that the solenoids must have very high outputs to close the valves against the sizable flow areas and line pressures found in current transmissions. Fast response time is also necessary to ensure accurate control of the transmission.

The strength of the magnetic field is the primary force that determines the speed of operation in a particular solenoid design. A stronger magnetic field will cause the plunger to move at a greater speed than a weaker one. There are basically two ways to increase the force of the magnetic field:

- Increase the amount of current applied to the coil or
- Increase the number of turns of wire in the coil.

The most common practice is to increase the number of turns by using thin wire that can completely fill the available space within the solenoid housing. The strength of the spring and the length of the plunger also contribute to the response speed possible by a particular solenoid design.

A solenoid can also be described by the method by which it is controlled. Some of the possibilities include variable force, pulse-width modulated, constant ON, or duty cycle. The variable force and pulse-width modulated versions utilize similar methods to control the current flow through the solenoid to position the solenoid plunger at a desired position somewhere between full ON and full OFF. The constant ON and duty cycled versions control the voltage across the solenoid to allow either full flow or no flow through the solenoid's valve.

OPERATION

When an electrical current is applied to the solenoid coil, a magnetic field is created which produces an attraction to the plunger, causing the plunger to move and work against the spring pressure and the load applied by the fluid the valve is controlling. The plunger is normally directly attached to the valve which it is to operate. When the current is removed from the coil, the attraction is removed and the plunger will return to its original position due to spring pressure.

The plunger is made of a conductive material and accomplishes this movement by providing a path for the magnetic field to flow. By keeping the air gap between the plunger and the coil to the minimum necessary to allow free movement of the plunger, the magnetic field is maximized.

TORQUE CONVERTER

DESCRIPTION

The torque converter (Fig. 109) is a hydraulic device that couples the engine crankshaft to the transmission. The torque converter consists of an outer shell with an internal turbine, a stator, an overrunning clutch, an impeller and an electronically applied converter clutch. The converter clutch provides reduced engine speed and greater fuel economy when engaged. Clutch engagement also provides reduced transmission fluid temperatures. The converter clutch engages in third gear. The torque converter hub drives the transmission oil (fluid) pump and contains an o-ring seal to better control oil flow.

The torque converter is a sealed, welded unit that is not repairable and is serviced as an assembly.

CAUTION: The torque converter must be replaced if a transmission failure resulted in large amounts of metal or fiber contamination in the fluid. If the fluid is contaminated, flush the fluid cooler and lines.

TORQUE CONVERTER (Continued)

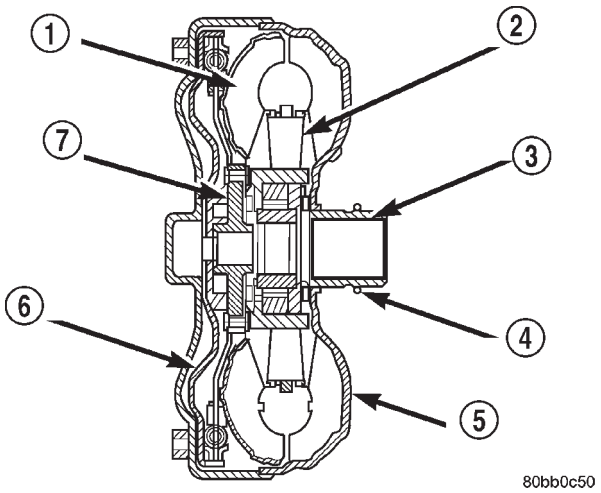

Fig. 109 Torque Converter Assembly

1 - TURBINE ASSEMBLY
2 - STATOR
3 - CONVERTER HUB
4 - O-RING
5 - IMPELLER ASSEMBLY
6 - CONVERTER CLUTCH PISTON
7 - TURBINE HUB

IMPELLER

The impeller (Fig. 110) is an integral part of the converter housing. The impeller consists of curved blades placed radially along the inside of the housing on the transmission side of the converter. As the converter housing is rotated by the engine, so is the impeller, because they are one and the same and are the driving members of the system.

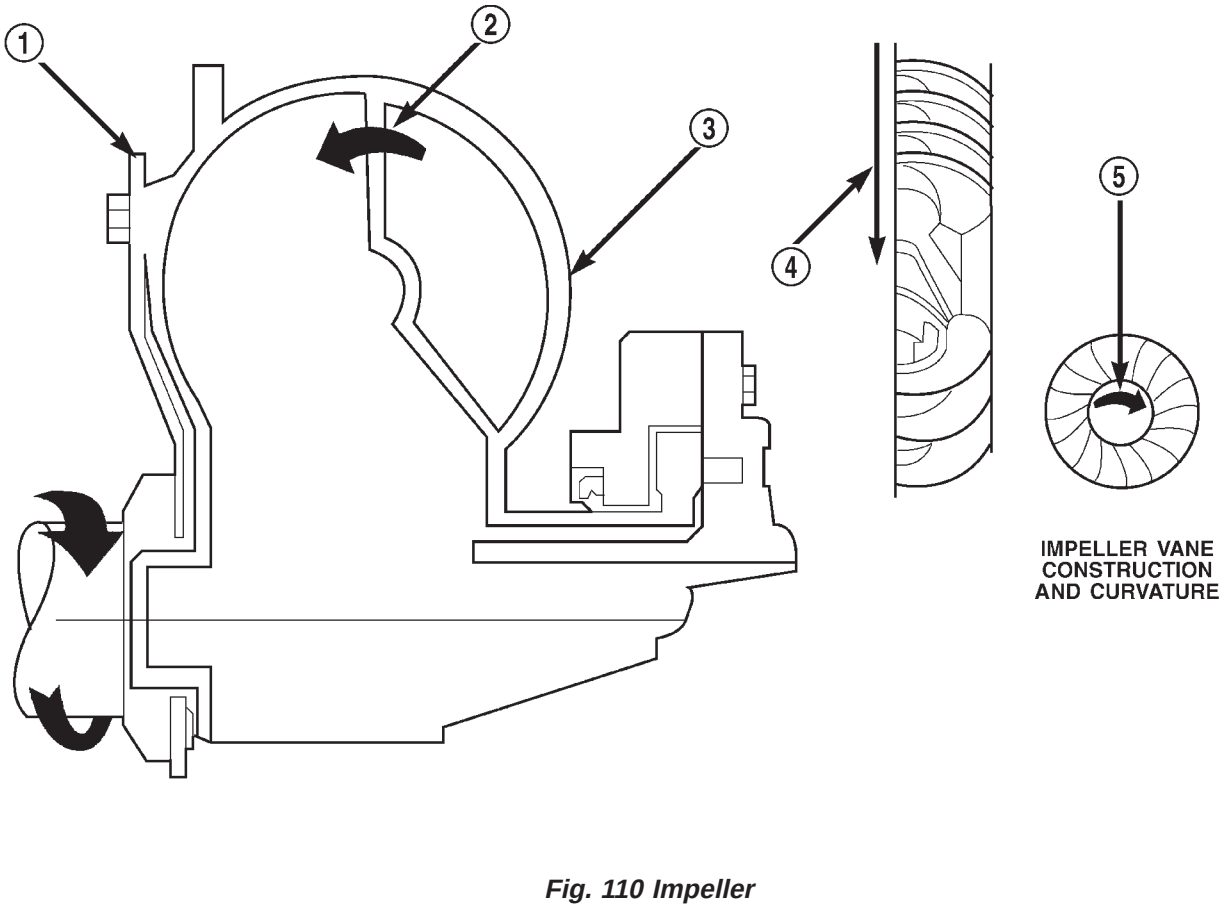

Fig. 110 Impeller

1 - ENGINE FLEXPLATE
2 - OIL FLOW FROM IMPELLER SECTION INTO TURBINE SECTION
3 - IMPELLER VANES AND COVER ARE INTEGRAL
4 - ENGINE ROTATION
5 - ENGINE ROTATION

TORQUE CONVERTER (Continued)

TURBINE

The turbine (Fig. 111) is the output, or driven, member of the converter. The turbine is mounted within the housing opposite the impeller, but is not attached to the housing. The input shaft is inserted through the center of the impeller and splined into the turbine. The design of the turbine is similar to the impeller, except the blades of the turbine are curved in the opposite direction.

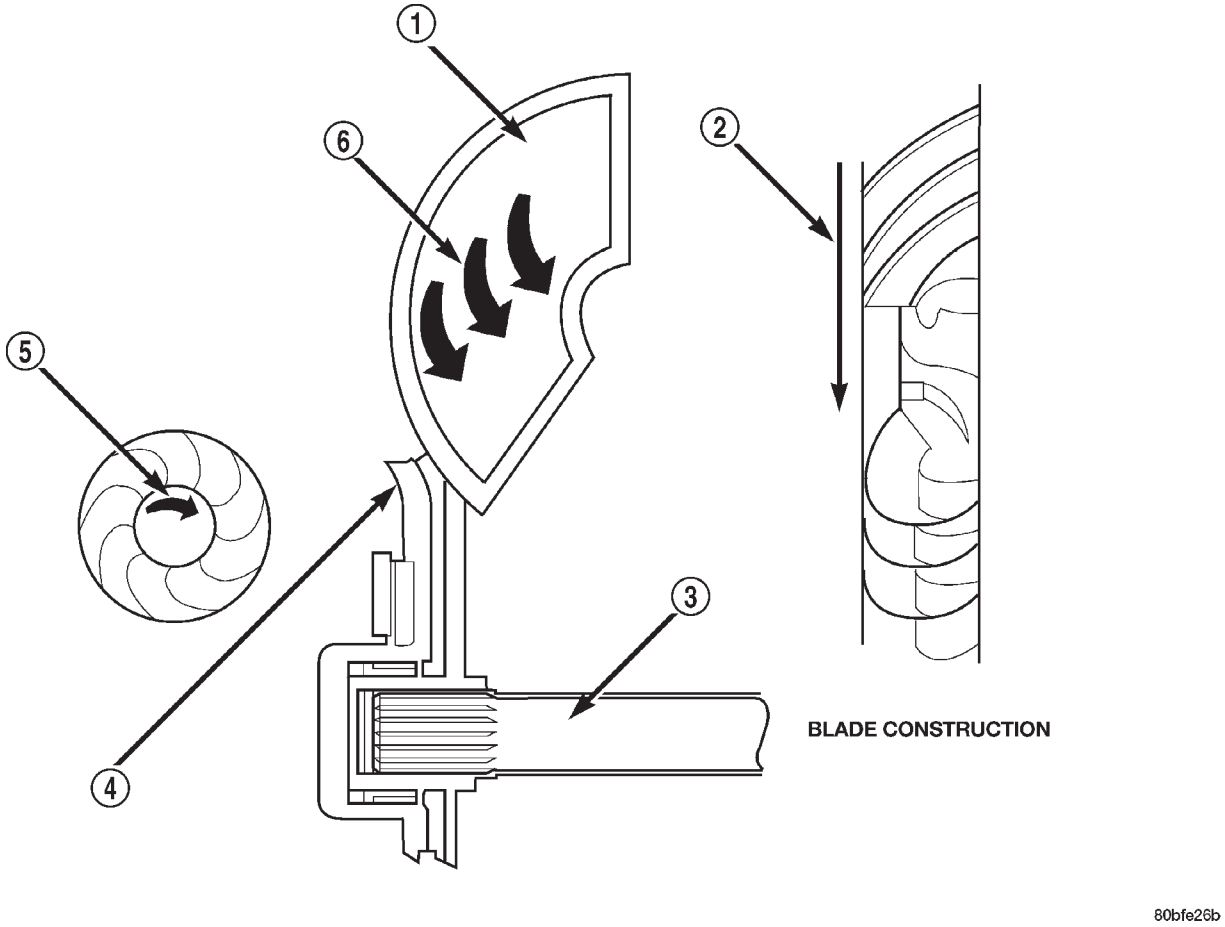

Fig. 111 Turbine

1 - TURBINE VANE
2 - ENGINE ROTATION
3 - INPUT SHAFT
4 - PORTION OF TORQUE CONVERTER COVER
5 - ENGINE ROTATION
6 - OIL FLOW WITHIN TURBINE SECTION

TORQUE CONVERTER (Continued)

STATOR

The stator assembly (Fig. 112) is mounted on a stationary shaft which is an integral part of the oil pump. The stator is located between the impeller and turbine within the torque converter case (Fig. 113). The stator contains an over-running clutch, which allows the stator to rotate only in a clockwise direction. When the stator is locked against the over-running clutch, the torque multiplication feature of the torque converter is operational.

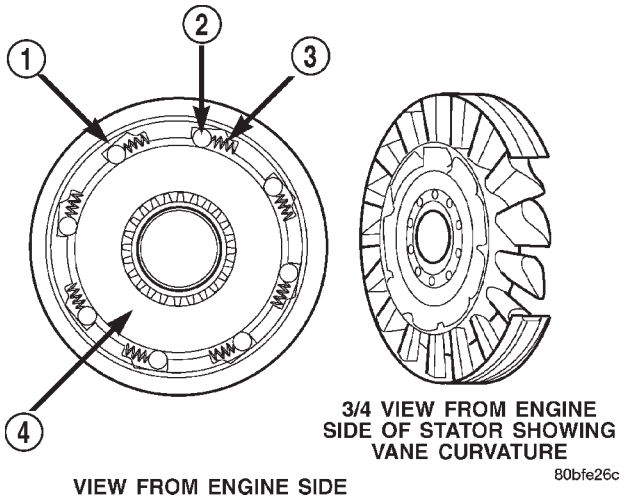

Fig. 112 Stator Components

1 - CAM (OUTER RACE)
2 - ROLLER
3 - SPRING
4 - INNER RACE

TORQUE CONVERTER CLUTCH (TCC)

The TCC (Fig. 114) was installed to improve the efficiency of the torque converter that is lost to the slippage of the fluid coupling. Although the fluid coupling provides smooth, shock-free power transfer, it is natural for all fluid couplings to slip. If the impeller and turbine were mechanically locked together, a zero slippage condition could be obtained. A hydraulic piston with friction material was added to the turbine assembly to provide this mechanical lock-up.

In order to reduce heat build-up in the transmission and buffer the powertrain against torsional vibrations, the TCM can duty cycle the L/R-CC Solenoid to achieve a smooth application of the torque converter clutch. This function, referred to as Electronically Modulated Converter Clutch (EMCC) can occur at various times depending on the following variables:

- Shift lever position
- Current gear range
- Transmission fluid temperature
- Engine coolant temperature
- Input speed

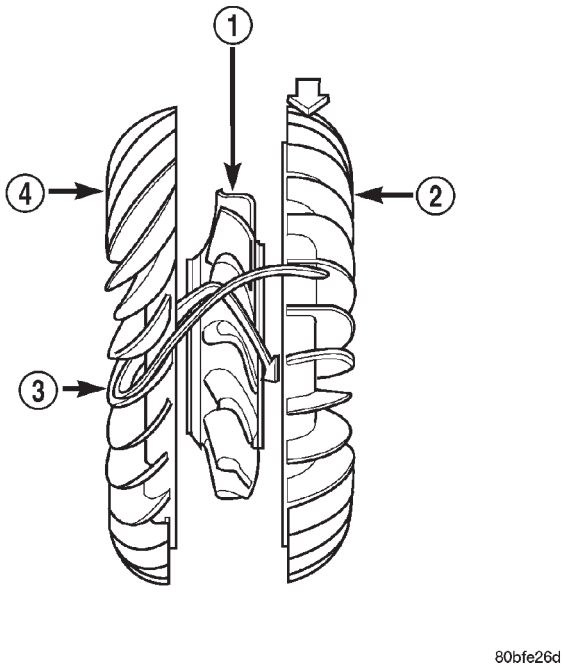

Fig. 113 Stator Location

1 - STATOR
2 - IMPELLER
3 - FLUID FLOW
4 - TURBINE

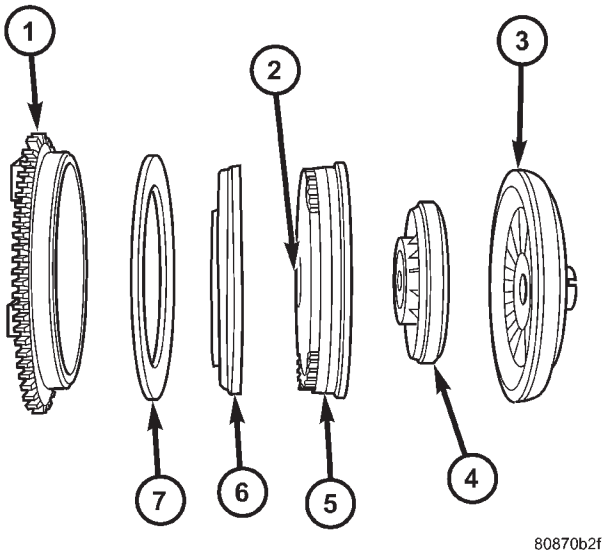

Fig. 114 Torque Converter Clutch (TCC)

1 - FRONT COVER
2 - THRUST WASHER ASSEMBLY
3 - IMPELLER
4 - STATOR
5 - TURBINE
6 - PISTON
7 - FRICTION DISC

- Throttle angle

TORQUE CONVERTER (Continued)

- Engine speed

OPERATION

The converter impeller (Fig. 115) (driving member), which is integral to the converter housing and bolted to the engine drive plate, rotates at engine speed. The converter turbine (driven member), which reacts from fluid pressure generated by the impeller, rotates and turns the transmission input shaft.

TURBINE

As the fluid that was put into motion by the impeller blades strikes the blades of the turbine, some of the energy and rotational force is transferred into the turbine and the input shaft. This causes both of them (turbine and input shaft) to rotate in a clockwise direction following the impeller. As the fluid is leaving the trailing edges of the turbine's blades it continues in a "hindering" direction back toward the impeller. If the fluid is not redirected before it strikes the impeller, it will strike the impeller in such a direction that it would tend to slow it down.

STATOR

Torque multiplication is achieved by locking the stator's over-running clutch to its shaft (Fig. 116). Under stall conditions (the turbine is stationary), the oil leaving the turbine blades strikes the face of the stator blades and tries to rotate them in a counter-clockwise direction. When this happens the over-running clutch of the stator locks and holds the stator from rotating. With the stator locked, the oil strikes the stator blades and is redirected into a "helping" direction before it enters the impeller. This circulation of oil from impeller to turbine, turbine to stator, and stator to impeller, can produce a maximum torque multiplication of about 2.4:1. As the turbine begins to match the speed of the impeller, the fluid that was hitting the stator in such as way as to cause it to lock-up is no longer doing so. In this condition of operation, the stator begins to free wheel and the converter acts as a fluid coupling.

TORQUE CONVERTER CLUTCH (TCC)

In a standard torque converter, the impeller and turbine are rotating at about the same speed and the stator is freewheeling, providing no torque multiplication. By applying the turbine's piston and friction material to the front cover, a total converter engagement can be obtained. The result of this engagement is a direct 1:1 mechanical link between the engine and the transmission.

The clutch can be engaged in second, third, fourth, and fifth gear ranges depending on overdrive control

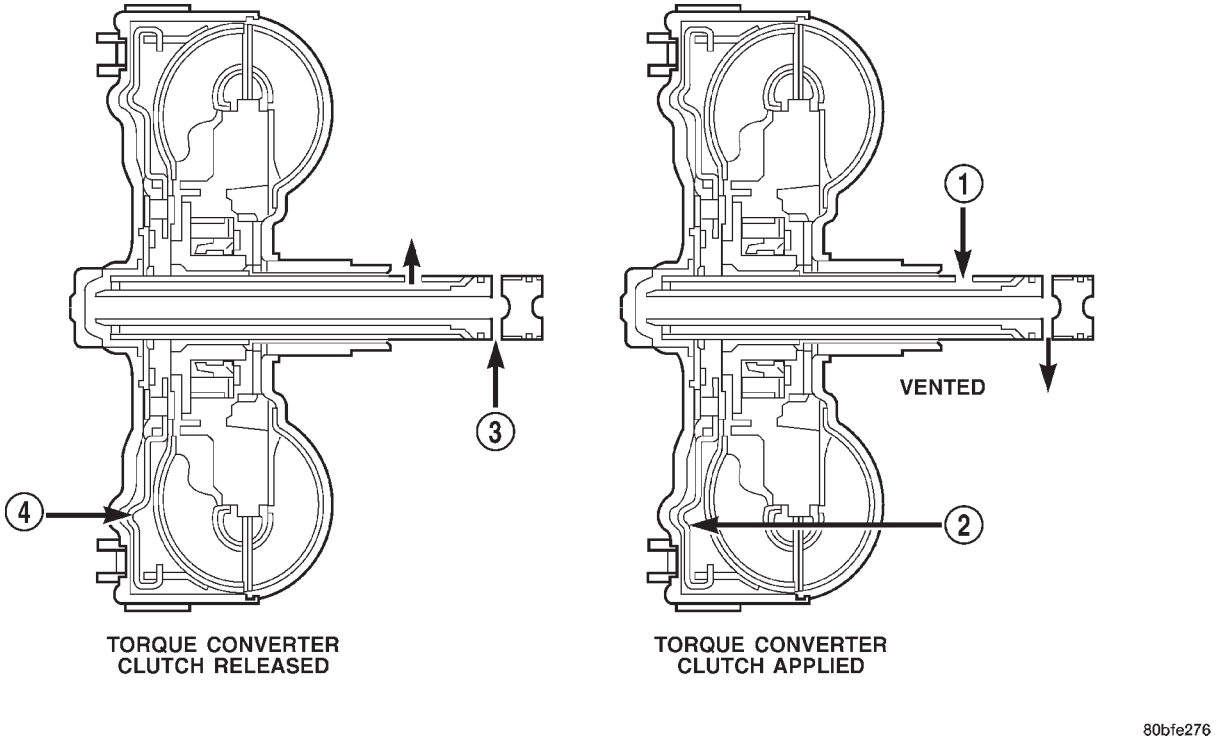

Fig. 115 Torque Converter Fluid Operation - Typical

1 - APPLY PRESSURE
2 - THE PISTON MOVES SLIGHTLY FORWARD
3 - RELEASE PRESSURE
4 - THE PISTON MOVES SLIGHTLY REARWARD

TORQUE CONVERTER (Continued)

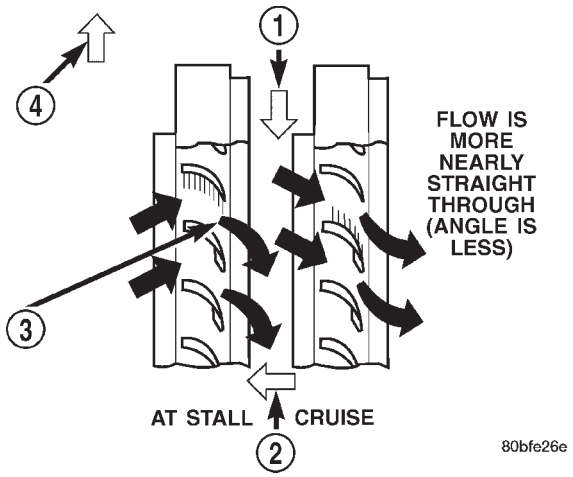

Fig. 116 Stator Operation

1 - DIRECTION STATOR WILL FREE WHEEL DUE TO OIL PUSHING ON BACKSIDE OF VANES
2 - FRONT OF ENGINE
3 - INCREASED ANGLE AS OIL STRIKES VANES
4 - DIRECTION STATOR IS LOCKED UP DUE TO OIL PUSHING AGAINST STATOR VANES

switch position. If the overdrive control switch is in the normal ON position, the clutch will engage after the shift to fourth gear, and above approximately 72 km/h (45 mph). If the control switch is in the OFF position, the clutch will engage after the shift to third gear, at approximately 56 km/h (35 mph) at light throttle.

The TCM controls the torque converter by way of internal logic software. The programming of the software provides the TCM with control over the L/R-CC Solenoid. There are four output logic states that can be applied as follows:

- No EMCC
- Partial EMCC
- Full EMCC
- Gradual-to-no EMCC

NO EMCC

Under No EMCC conditions, the L/R Solenoid is OFF. There are several conditions that can result in NO EMCC operations. No EMCC can be initiated due to a fault in the transmission or because the TCM does not see the need for EMCC under current driving conditions.

PARTIAL EMCC

Partial EMCC operation modulates the L/R Solenoid (duty cycle) to obtain partial torque converter clutch application. Partial EMCC operation is maintained until Full EMCC is called for and actuated. During Partial EMCC some slip does occur. Partial EMCC will usually occur at low speeds, low load and light throttle situations.

FULL EMCC

During Full EMCC operation, the TCM increases the L/R Solenoid duty cycle to full ON after Partial EMCC control brings the engine speed within the desired slip range of transmission input speed relative to engine rpm.

GRADUAL-TO-NO EMCC

This operation is to soften the change from Full or Partial EMCC to No EMCC. This is done at mid-throttle by decreasing the L/R Solenoid duty cycle.

REMOVAL

(1) Remove transmission and torque converter from vehicle.

(2) Place a suitable drain pan under the converter housing end of the transmission.

CAUTION: Verify that transmission is secure on the lifting device or work surface, the center of gravity of the transmission will shift when the torque converter is removed creating an unstable condition. The torque converter is a heavy unit. Use caution when separating the torque converter from the transmission.

(3) Pull the torque converter forward until the center hub clears the oil pump seal.

(4) Separate the torque converter from the transmission.

INSTALLATION

Check converter hub and drive flats for sharp edges, burrs, scratches, or nicks. Polish the hub and flats with 320/400 grit paper or crocus cloth if necessary. Verify that the converter hub o-ring is properly installed and is free from debris. The hub must be smooth to avoid damaging the pump seal at installation.

(1) Lubricate oil pump seal lip with transmission fluid.

(2) Place torque converter in position on transmission.

CAUTION: Do not damage oil pump seal or converter hub o-ring while inserting torque converter into the front of the transmission.

(3) Align torque converter to oil pump seal opening.

(4) Insert torque converter hub into oil pump.

(5) While pushing torque converter inward, rotate converter until converter is fully seated in the oil pump gears.

(6) Check converter seating with a scale and straightedge (Fig. 117). Surface of converter lugs

TORQUE CONVERTER (Continued)

should be at least 13 mm (1/2 in.) to rear of straightedge when converter is fully seated.

(7) If necessary, temporarily secure converter with C-clamp attached to the converter housing.

(8) Install the transmission in the vehicle.

(9) Fill the transmission with the recommended fluid.

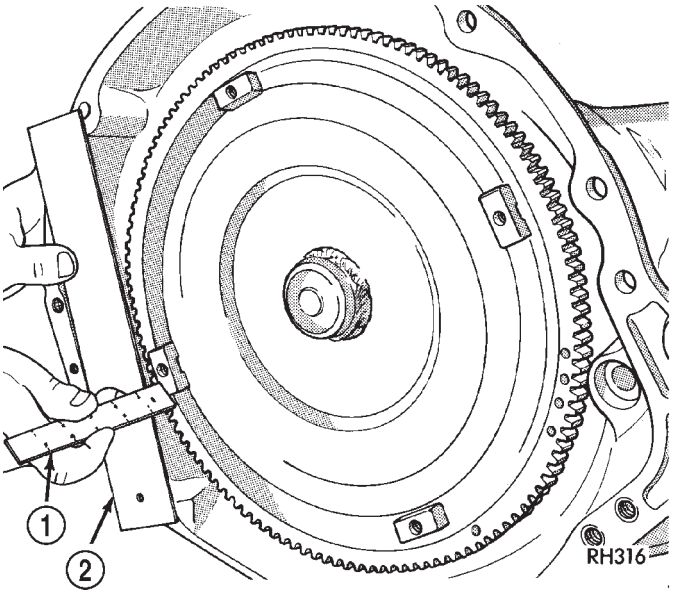

Fig. 117 Checking Torque Converter Seating-Typical

1 - SCALE
2 - STRAIGHTEDGE

TRANSMISSION CONTROL RELAY

DESCRIPTION

The relay is supplied fused B+ voltage, energized by the TCM, and is used to supply power to the solenoid pack when the transmission is in normal operating mode.

OPERATION

When the relay is “off”, no power is supplied to the solenoid pack and the transmission is in “limp-in” mode. After a controller reset, the TCM energizes the relay. Prior to this, the TCM verifies that the contacts are open by checking for no voltage at the switched battery terminals. After this is verified, the voltage at the solenoid pack pressure switches is checked. After the relay is energized, the TCM monitors the terminals to verify that the voltage is greater than 3 volts.

TRANSMISSION RANGE SENSOR

DESCRIPTION

The Transmission Range Sensor (TRS) is mounted to the top of the valve body inside the transmission.

The Transmission Range Sensor (TRS) has six switch contacts that:

- Determine shift lever position
- Supply ground to the Starter Relay in Park and Neutral only.
- Supply ground to the TCM for backup lamp control in Reverse only.

The TRS also has an integrated temperature sensor (thermistor) that communicates transmission temperature to the TCM and PCM.

OPERATION

The Transmission Range Sensor (TRS) communicates shift lever position to the TCM as a combination of open and closed switches. Each shift lever position has an assigned combination of switch states (open/closed) that the TCM receives from four sense circuits. The TCM interprets this information and determines the appropriate transmission gear position and shift schedule.

There are many possible combinations of open and closed switches (codes). Seven of these possible codes are related to gear position and five are recognized as “between gear” codes. This results in many codes which should **never occur**. These are called “invalid” codes. An invalid code will result in a DTC, and the TCM will then determine the shift lever position based on pressure switch data. This allows reasonably normal transmission operation with a TRS failure.

GEAR	C5	C4	C3	C2	C1
Park	CL	OP	OP	CL	CL
Temp 1	CL	OP	OP	CL	OP
Reverse	OP	OP	OP	CL	OP
Temp 2	OP	OP	CL	CL	OP
Neutral 1	OP	OP	CL	CL	CL
Neutral 2	OP	CL	CL	CL	CL
Temp 3	OP	CL	CL	CL	OP
Drive	OP	CL	CL	OP	OP
Temp 4	OP	CL	OP	OP	OP
Manual 2	CL	CL	OP	OP	OP
Temp 5	CL	OP	OP	OP	OP
Manual 1	CL	OP	CL	OP	OP

TRANSMISSION SOLENOID/ TRS ASSEMBLY

DESCRIPTION

The transmission solenoid/TRS assembly is internal to the transmission and mounted on the valve body assembly (Fig. 118). The assembly consists of six solenoids that control hydraulic pressure to the six friction elements (transmission clutches), and the torque converter clutch. The pressure control solenoid is located on the side of the solenoid/TRS assembly. The solenoid/TRS assembly also contains five pressure switches that feed information to the TCM.

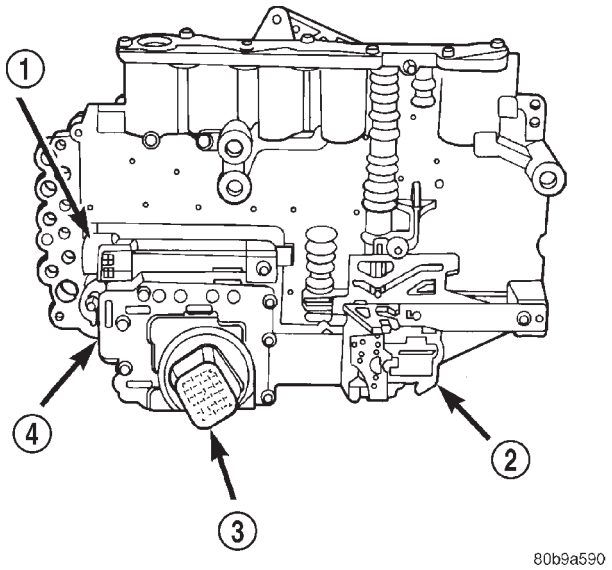

Fig. 118 Transmission Solenoid/TRS Assembly

1 - PRESSURE CONTROL SOLENOID
2 - TRANSMISSION RANGE SENSOR
3 - 23-WAY CONNECTOR
4 - SOLENOID PACK

OPERATION

SOLENOIDS

Solenoids are used to control the L/R, 2C, 4C, OD, and UD friction elements. The reverse clutch is controlled by line pressure and the position of the manual valve in the valve body. All the solenoids are contained within the Solenoid and Pressure Switch Assembly. The solenoid and pressure switch assembly contains one additional solenoid, Multi-Select (MS), which serves primarily to provide 2nd and 3rd gear limp-in operation.

The solenoids receive electrical power from the Transmission Control Relay through a single wire. The TCM energizes or operates the solenoids individually by grounding the return wire of the solenoid as necessary. When a solenoid is energized, the solenoid valve shifts, and a fluid passage is opened or closed (vented or applied), depending on its default operating state. The result is an apply or release of a frictional element.

The MS and UD solenoids are normally applied to allow transmission limp-in in the event of an electrical failure.

The continuity of the solenoids and circuits are periodically tested. Each solenoid is turned on or off depending on its current state. An inductive spike should be detected by the TCM during this test. If no spike is detected, the circuit is tested again to verify the failure. In addition to the periodic testing, the solenoid circuits are tested if a speed ratio or pressure switch error occurs.

PRESSURE SWITCHES

The TCM relies on five pressure switches to monitor fluid pressure in the L/R, 2C, 4C, UD, and OD hydraulic circuits. The primary purpose of these switches is to help the TCM detect when clutch circuit hydraulic failures occur. The switches close at 23 psi and open at 11 psi, and simply indicate whether or not pressure exists. The switches are continuously monitored by the TCM for the correct states (open or closed) in each gear as shown in the following chart:

GEAR	L/R	2C	4C	UD	OD
R	OP	OP	OP	OP	OP
P/N	CL	OP	OP	OP	OP
1ST	CL*	OP	OP	CL	OP
2ND	OP	CL	OP	CL	OP
2ND PRIME	OP	OP	CL	CL	OP
D	OP	OP	OP	CL	CL
4TH	OP	OP	CL	OP	CL
5TH	OP	CL	OP	OP	CL

*L/R is closed if output speed is below 100 rpm in Drive and Manual 2. L/R is open in Manual 1.

A Diagnostic Trouble Code (DTC) will set if the TCM senses any switch open or closed at the wrong time in a given gear.

REMOVAL

(1) Remove the valve body from the transmission (Fig. 119).

(2) Remove the screws holding the transmission solenoid/TRS assembly onto the valve body (Fig. 120).

(3) Separate the transmission solenoid/TRS assembly from the valve body.

TRANSMISSION SOLENOID/TRS ASSEMBLY (Continued)

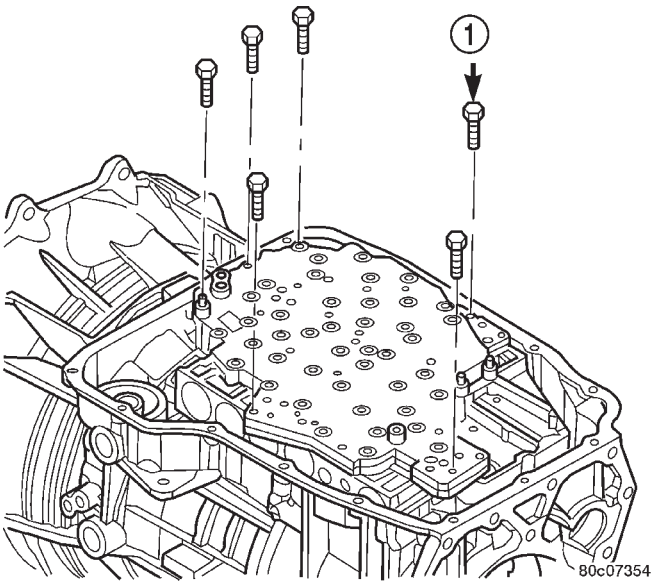

Fig. 119 Valve Body Bolts

1 - VALVE BODY TO CASE BOLT (6)

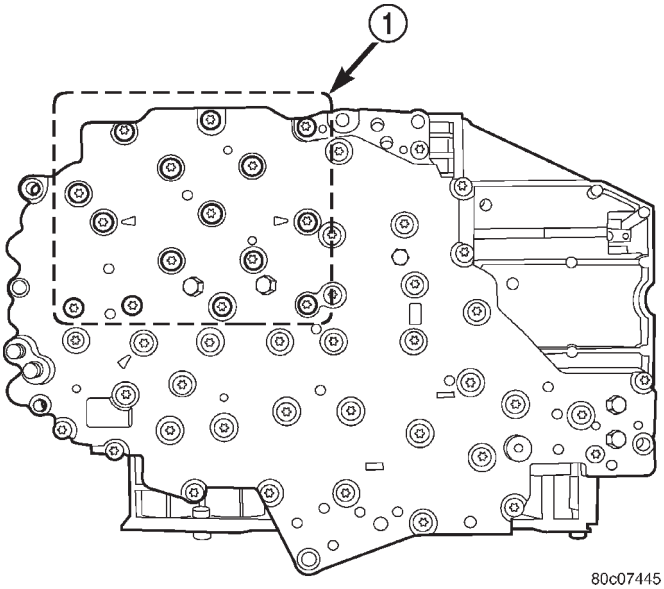

Fig. 120 Ttransmission Solenoid/TRS Assembly Screws

1 - SOLENOID PACK BOLTS (15)

INSTALLATION

(1) Place TRS selector plate in the PARK position.

(2) Position the transmission solenoid/TRS assembly onto the valve body. Be sure that both alignment dowels are fully seated in the valve body and that the TRS switch contacts are properly positioned in the selector plate

(3) Install the screws to hold the transmission solenoid/TRS assembly onto the valve body.

(4) Tighten the solenoid assembly screws adjacent to the arrows cast into the bottom of the valve body first. Tighten the screws to 5.7 N·m (50 in.lbs.).

(5) Tighten the remainder of the solenoid assembly screws to 5.7 N·m (50 in.lbs.).

(6) Install the valve body into the transmission.

TRANSMISSION TEMPERATURE SENSOR

DESCRIPTION

The transmission temperature sensor is a thermistor that is integral to the Transmission Range Sensor (TRS).

OPERATION

The transmission temperature sensor is used by the TCM to sense the temperature of the fluid in the sump. Since fluid temperature can affect transmission shift quality and convertor lock up, the TCM requires this information to determine which shift schedule to operate in.

Calculated Temperature

A failure in the temperature sensor or circuit will result in calculated temperature being substituted for actual temperature. Calculated temperature is a predicted fluid temperature which is calculated from a combination of inputs:

- Battery (ambient) temperature
- Engine coolant temperature
- In-gear run time since start-up

VALVE BODY

DESCRIPTION

The valve body consists of a cast aluminum valve body, a separator plate, and a transfer plate. The valve body contains valves and check balls that control fluid delivery to the torque converter clutch, bands, and frictional clutches. The valve body contains the following components (Fig. 121) and (Fig. 122):

- Solenoid switch valve
- Manual valve
- Low/reverse switch valve
- 5 Accumulators
- 7 check balls

OPERATION

NOTE: Refer to the Hydraulic Schematics for a visual aid in determining valve location, operation and design.

VALVE BODY (Continued)

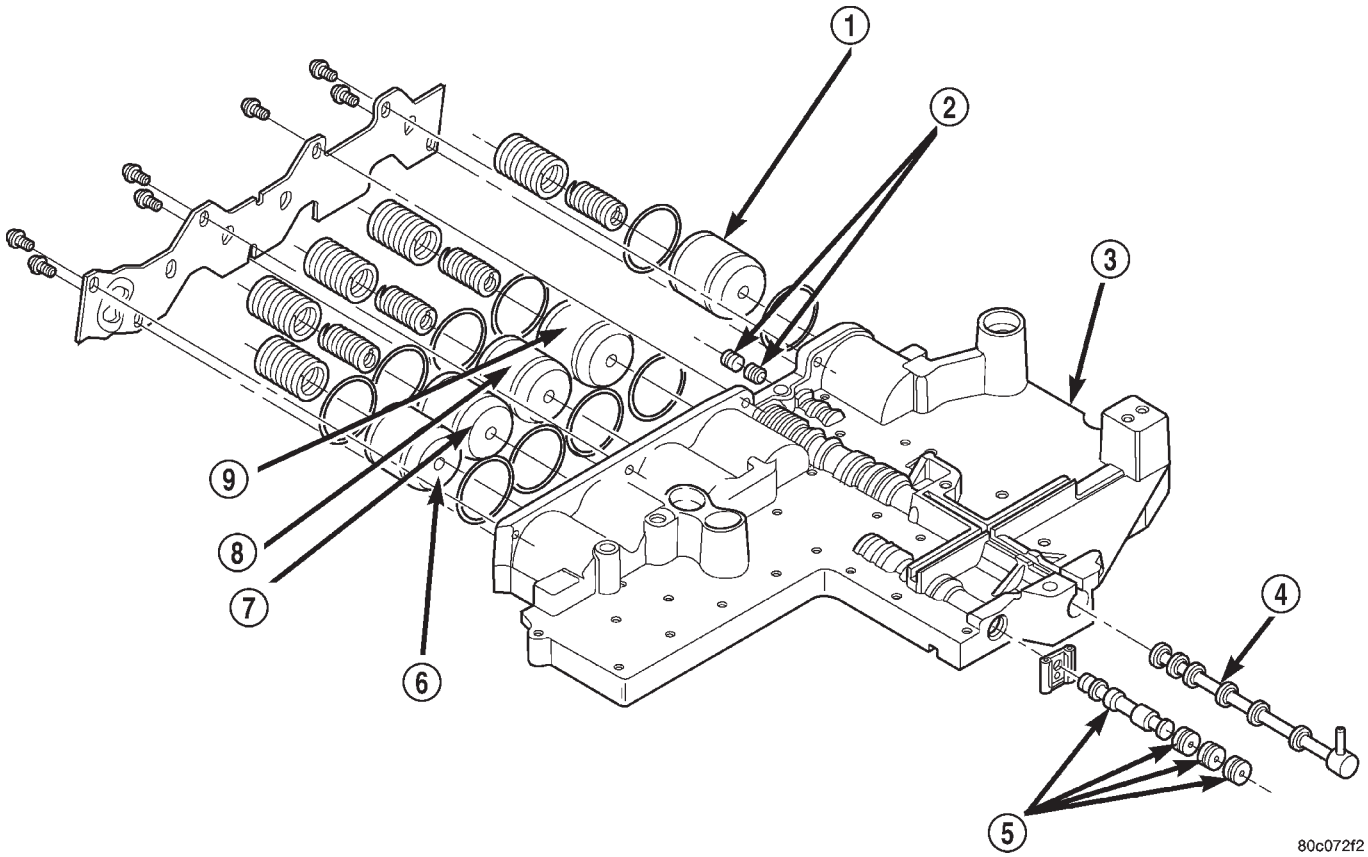

Fig. 121 Valve Body Components

1 - LOW/REVERSE ACCUMULATOR
2 - LOW/REVERSE SWITCH VALVE
3 - UPPER VALVE BODY
4 - MANUAL VALVE
5 - SOLENOID SWITCH VALVE
6 - OVERDRIVE ACCUMULATOR
7 - UNDERDRIVE ACCUMULATOR
8 - 4C ACCUMULATOR
9 - 2C ACCUMULATOR

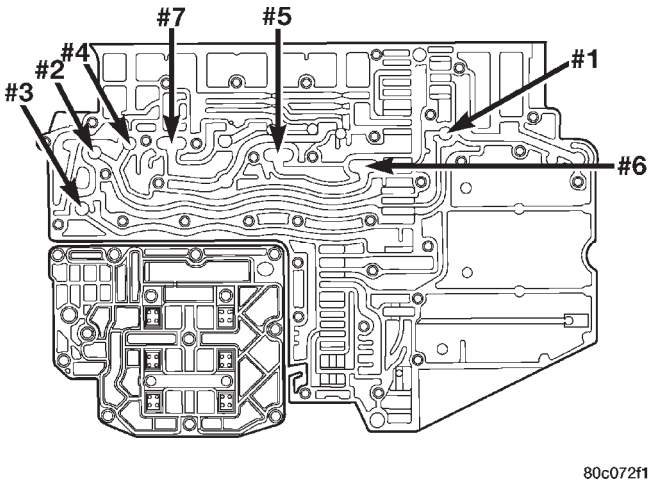

Fig. 122 Check Ball Locations

SOLENOID SWITCH VALVE

The Solenoid Switch Valve (SSV) controls the direction of the transmission fluid when the L/R-TCC solenoid is energized.

The Solenoid Switch Valve controls line pressure from the LR-TCC solenoid. In 1st gear, the SSV will be in the downshifted position, thus directing fluid to the L/R clutch circuit. In 2nd, 3rd, 4th, and fifth gears, the solenoid switch valve will be in the upshifted position and directs the fluid into the torque converter clutch (TCC) circuit.

When shifting into 1st gear, a special hydraulic sequence is performed to ensure SSV movement into the downshifted position. The L/R pressure switch is monitored to confirm SSV movement. If the movement is not confirmed (the L/R pressure switch does not close), 2nd gear is substituted for 1st. A DTC will be set after three unsuccessful attempts are made to get into 1st gear in one given key start.

VALVE BODY (Continued)

MANUAL VALVE

The manual valve is a relay valve. The purpose of the manual valve is to direct fluid to the correct circuit needed for a specific gear or driving range. The manual valve, as the name implies, is manually operated by the driver with a lever located on the top of the valve body. The valve is connected mechanically by a cable to the gearshift mechanism. The valve is held in each of its positions by a roller detent spring (Fig. 123) that engages the “roostercomb” of the TRS selector plate.

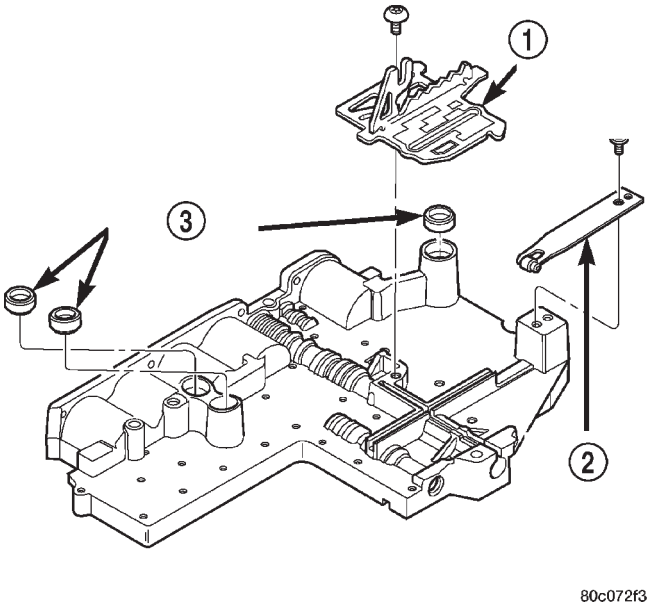

Fig. 123 TRS Selector Plate and Detent Spring

1 - TRS SELECTOR PLATE
2 - DETENT SPRING
3 - CLUTCH PASSAGE SEALS

LOW/REVERSE SWITCH VALVE

The low/reverse switch valve allows the low/reverse clutch to be operated by either the LR/CC solenoid or the MS solenoid.

REMOVAL

The valve body can be removed for service without having to remove the transmission assembly.

The valve body can be disassembled for cleaning and inspection of the individual components. (Refer to 21 - TRANSMISSION/TRANSAXLE/AUTOMATIC - 45RFE/VALVE BODY - DISASSEMBLY)

(1) Shift transmission into PARK.

(2) Raise vehicle.

(3) Disconnect wires at the solenoid and pressure switch assembly connector.

(4) Position drain pan under transmission oil pan.

(5) Remove transmission oil pan.

(6) Remove the primary oil filter from valve body. (Fig. 124)

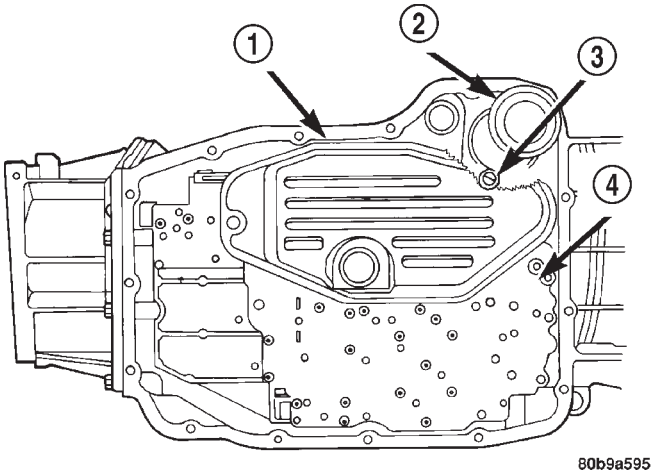

Fig. 124 Remove Primary Oil Filter

1 - PRIMARY OIL FILTER
2 - COOLER RETURN FILTER
3 - FILTER BYPASS VALVE
4 - VALVE BODY

(7) Remove bolts attaching valve body to transmission case (Fig. 125).

(8) Lower the valve body and work the electrical connector out of transmission case.

(9) Separate the valve body from the transmission.

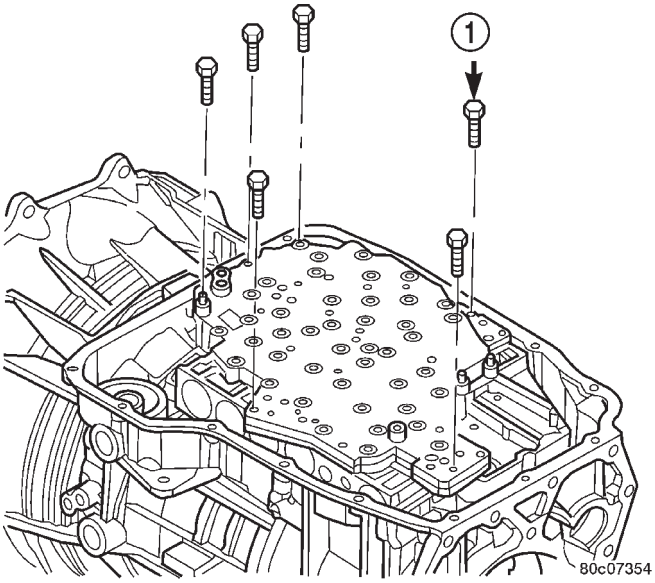

Fig. 125 Valve Body Bolts

1 - VALVE BODY TO CASE BOLT (6)

DISASSEMBLY

(1) Remove the screws holding the solenoid and pressure switch assembly to the valve body (Fig.

VALVE BODY (Continued)

126). Do not remove the screws on the top of the solenoid and pressure switch assembly.

(2) Separate the solenoid and pressure switch assembly from the valve body.

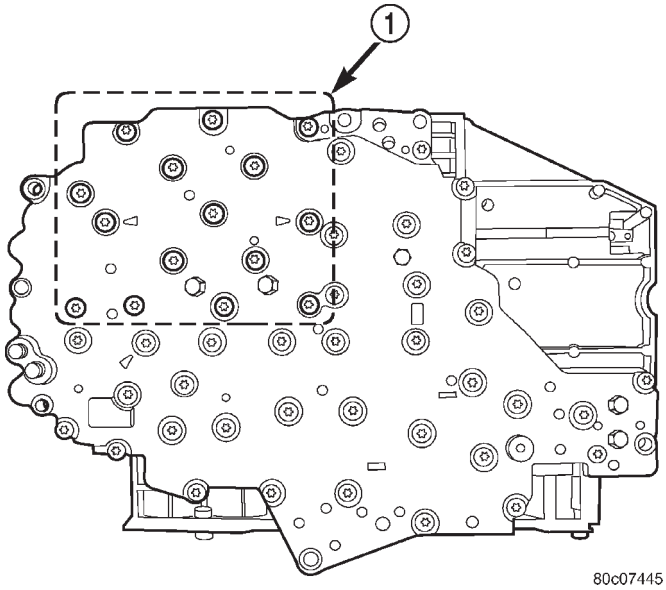

Fig. 126 Solenoid and Pressure Switch Assembly Screws

1 - SOLENOID PACK BOLTS (15)

(3) Remove the screw holding the detent spring (Fig. 127) onto the valve body.

(4) Remove the detent spring from the valve body.

(5) Remove the TRS selector plate from the valve body and the manual valve.

(6) Remove the clutch passage seals from the valve body, if necessary.

(7) Remove the screws holding the accumulator cover onto the valve body (Fig. 128).

(8) Remove the accumulator springs and pistons from the valve body. Note which accumulator piston and spring belong in each location.

(9) Place the valve body on the bench with the transfer plate upward.

NOTE: The valve body contains seven check balls. The transfer plate must be placed upward to prevent losing the check balls when the transfer plate is removed from the valve body.

(10) Remove the screws holding the valve body to the valve body transfer plate.

(11) Remove the transfer plate from the valve body. Note the location of all check balls (Fig. 129).

(12) Remove the check balls from the valve body.

(13) Remove the retainers securing the solenoid switch valve, manual valve, and the low/reverse switch valve into the valve body and remove the associated valve and spring. Tag each valve and

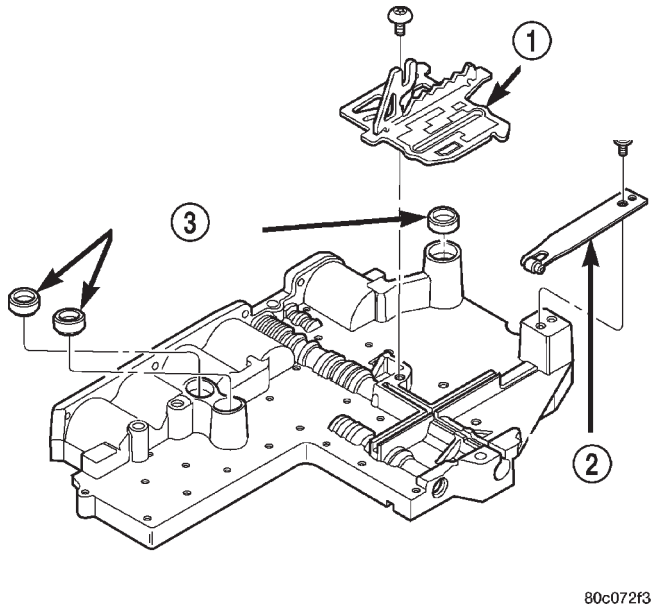

Fig. 127 Valve Body External Components

1 - TRS SELECTOR PLATE
2 - DETENT SPRING
3 - CLUTCH PASSAGE SEALS

spring combination with location information to aid in assembly (Fig. 130).

CLEANING

Clean the valve housings, valves, plugs, springs, and separator plates with a standard parts cleaning solution only. Do not use gasoline, kerosene, or any type of caustic solution. (Fig. 131)

Do not immerse any of the electrical components in cleaning solution. Clean the electrical components by wiping them off with dry shop towels only.

Dry all except the electrical parts with compressed air. Make sure all passages are clean and free from obstructions. **Do not use rags or shop towels to dry or wipe off valve body components. Lint from these materials can stick to valve body parts, interfere with valve operation, and clog filters and fluid passages.**

INSPECTION

Inspect all of the valve body mating surfaces for scratches, nicks, burrs, or distortion. Use a straightedge to check surface flatness. Minor scratches may be removed with crocus cloth using only very light pressure.

Minor distortion of a valve body mating surface may be corrected by smoothing the surface with a sheet of crocus cloth. Position the crocus cloth on a surface plate, sheet of plate glass or equally flat surface. If distortion is severe or any surfaces are

VALVE BODY (Continued)

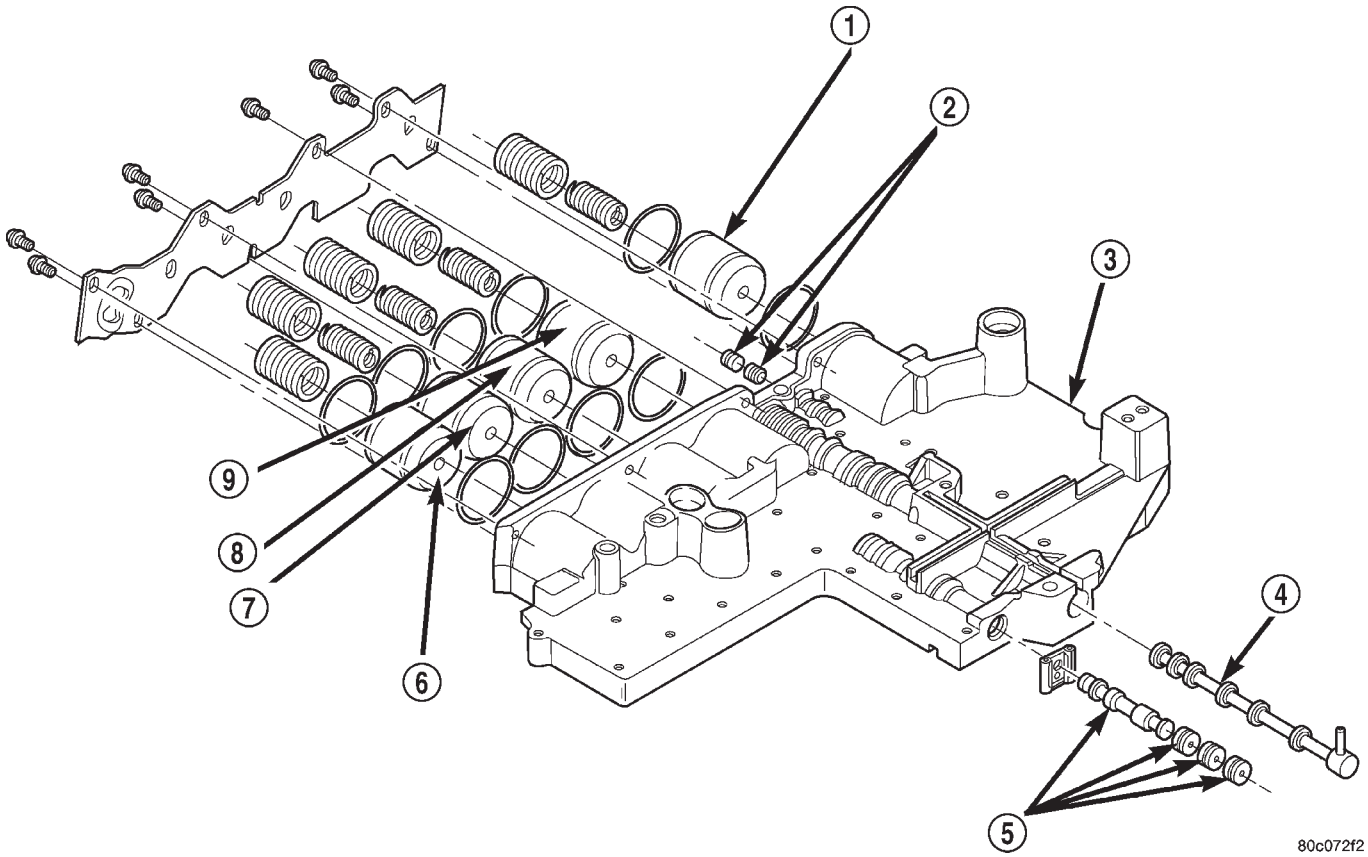

Fig. 128 Valve Body Components

1 - LOW/REVERSE ACCUMULATOR
2 - LOW/REVERSE SWITCH VALVE
3 - UPPER VALVE BODY
4 - MANUAL VALVE
5 - SOLENOID SWITCH VALVE
6 - OVERDRIVE ACCUMULATOR
7 - UNDERDRIVE ACCUMULATOR
8 - 4C ACCUMULATOR
9 - 2C ACCUMULATOR

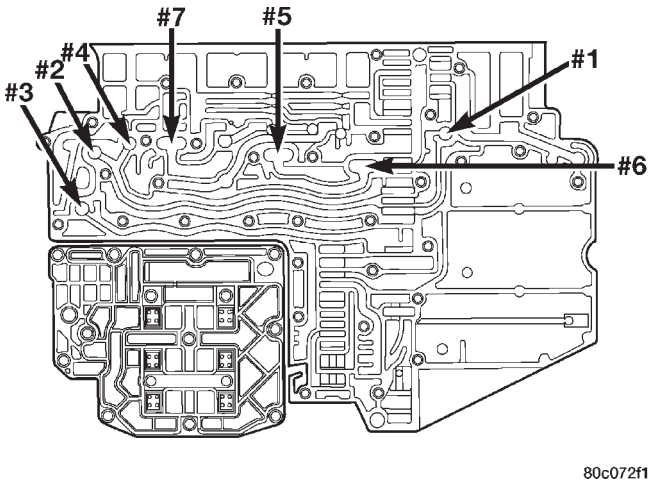

Fig. 129 Check Ball Locations

heavily scored, the valve body will have to be replaced.

Inspect the valves and plugs (Fig. 132) for scratches, burrs, nicks, or scores. Minor surface scratches on steel valves and plugs can be removed with crocus cloth but **do not round off the edges of the valve or plug lands.** Maintaining sharpness of these edges is vitally important. The edges prevent foreign matter from lodging between the valves and plugs and the bore.

Inspect all the valve and plug bores in the valve body. Use a penlight to view the bore interiors. Replace the valve body if any bores are distorted or scored. Inspect all of the valve body springs. The springs must be free of distortion, warpage or broken coils.

Trial fit each valve and plug in its bore to check freedom of operation. When clean and dry, the valves and plugs should drop freely into the bores.

Valve body bores do not change dimensionally with use. If the valve body functioned correctly when new, it will continue to operate properly after cleaning and inspection. It should not be necessary to replace a

VALVE BODY (Continued)

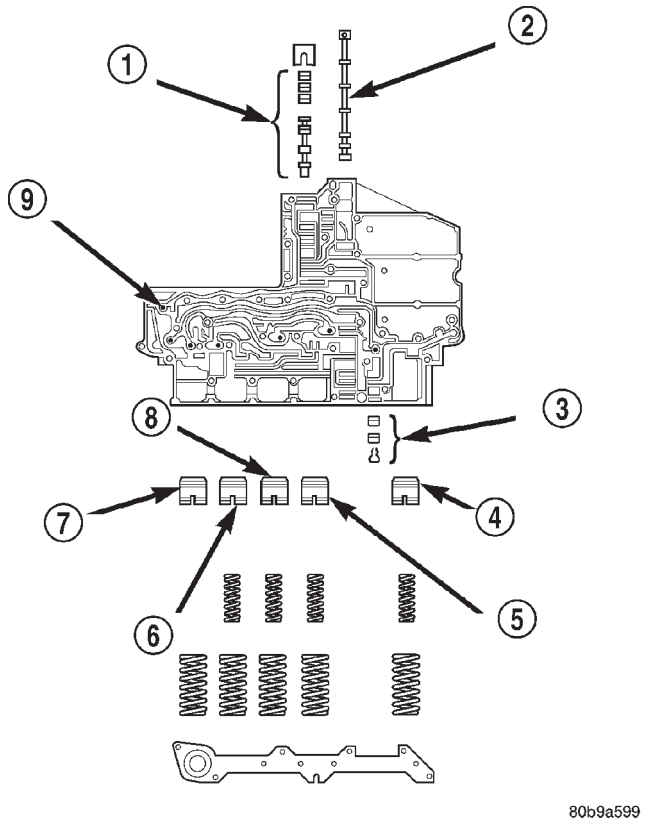

Fig. 130 Valve Body Components

1 - SOLENOID SWITCH VALVE
2 - MANUAL VALVE
3 - LOW REVERSE SWITCH VALVE
4 - LOW REVERSE ACCUMULATOR
5 - 2ND CLUTCH ACCUMULATOR
6 - UNDERDRIVE ACCUMULATOR
7 - OVERDRIVE ACCUMULATOR
8 - 4TH CLUTCH ACCUMULATOR
9 - CHECK BALLS (7)

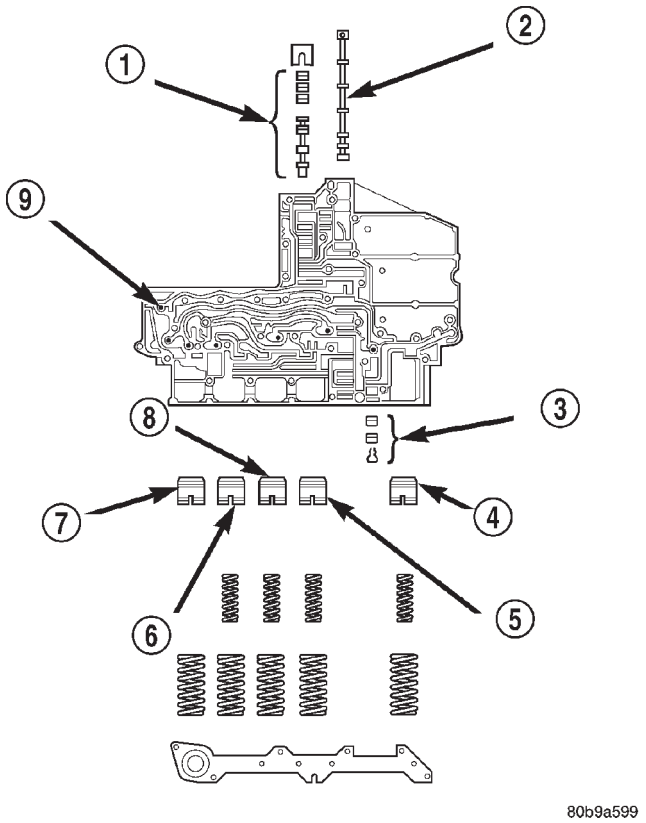

Fig. 131 Valve Body Components

1 - SOLENOID SWITCH VALVE
2 - MANUAL VALVE
3 - LOW REVERSE SWITCH VALVE
4 - LOW REVERSE ACCUMULATOR
5 - 2ND CLUTCH ACCUMULATOR
6 - UNDERDRIVE ACCUMULATOR
7 - OVERDRIVE ACCUMULATOR
8 - 4TH CLUTCH ACCUMULATOR
9 - CHECK BALLS (7)

valve body assembly unless it is damaged in handling.

Inspect all the accumulator bores in the valve body. Use a penlight to view the bore interiors. Replace the valve body if any bores are distorted or scored. Inspect all of the accumulator springs. The springs must be free of distortion, warpage or broken coils.

Inspect all the fluid seals on the valve body (Fig. 133). Replace any seals that are cracked, distorted, or damaged in any way. These seals pass fluid pressure directly to the clutches. Any pressure leak at these points, may cause transmission performance problems.

ASSEMBLY

(1) Lubricate valves, springs, and the housing valve bores with clean transmission fluid.

(2) Install solenoid switch valve, manual valve, and the low/reverse switch valve into the valve body.

(3) Install the retainers to hold each valve into the valve body.

(4) Install the valve body check balls into their proper locations.

(5) Position the transfer plate onto the valve body.

(6) Install the screws to hold the transfer plate to the valve body. Tighten the screws to 5.6 N·m (50 in. lbs.).

(7) Install the accumulator pistons and springs into the valve body in the location from which they were removed. Note that all accumulators except the overdrive have two springs. The overdrive accumulator piston has only one spring.

(8) Position the accumulator cover onto the valve body.

(9) Install the screws to hold the accumulator cover onto the valve body. Tighten the screws to 4.5 N·m (40 in. lbs.).

VALVE BODY (Continued)

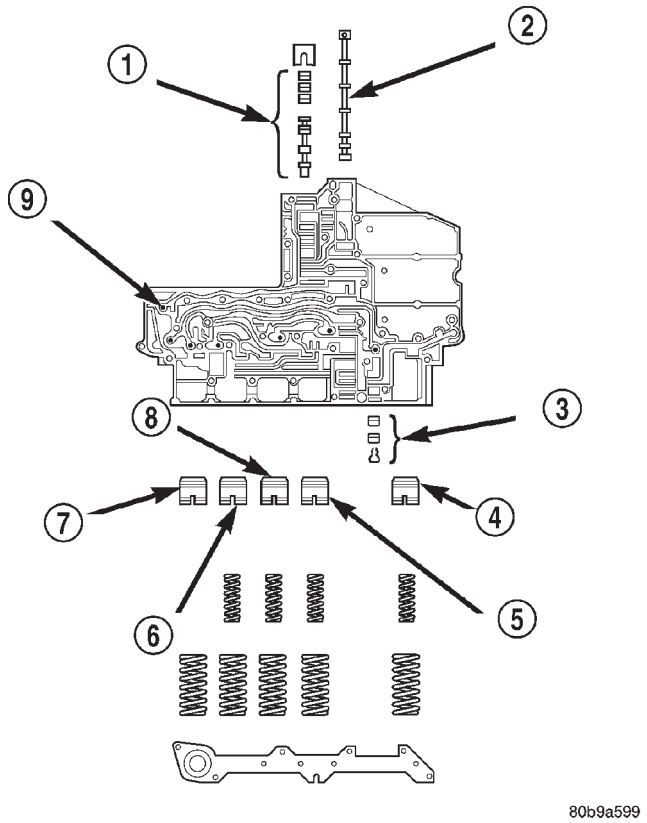

Fig. 132 Valve Body Components

1 - SOLENOID SWITCH VALVE
2 - MANUAL VALVE
3 - LOW REVERSE SWITCH VALVE
4 - LOW REVERSE ACCUMULATOR
5 - 2ND CLUTCH ACCUMULATOR
6 - UNDERDRIVE ACCUMULATOR
7 - OVERDRIVE ACCUMULATOR
8 - 4TH CLUTCH ACCUMULATOR
9 - CHECK BALLS (7)

(10) Install the TRS selector plate onto the valve body and the manual valve.

(11) Install the solenoid and pressure switch assembly onto the valve body.

(12) Install the screws to hold the solenoid and pressure switch assembly onto the valve body. Tighten the screws to 5.7 N·m (50 in. lbs.). Tighten the screws adjacent to the arrows cast into the bottom of the transfer plate first.

(13) Position the detent spring onto the valve body.

(14) Install the screw to hold the detent spring onto the valve body. Tighten the screw to 4.5 N·m (40 in. lbs.).

(15) Install new clutch passage seals onto the valve body, if necessary

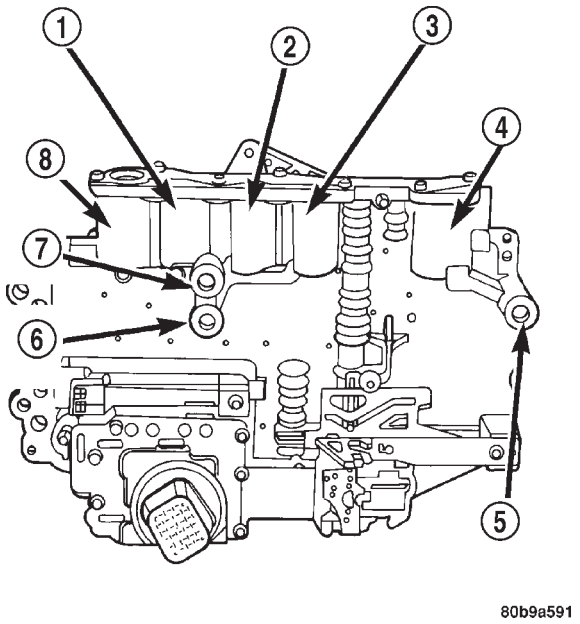

Fig. 133 Valve Body Seals

1 - UNDERDRIVE ACCUMULATOR (2 SPRINGS)
2 - 4TH CLUTCH ACCUMULATOR (2 SPRINGS)
3 - 2ND CLUTCH ACCUMULATOR (2 SPRINGS)
4 - LOW REVERSE ACCUMULATOR (2 SPRINGS)
5 - LOW/REVERSE PASSAGE SEAL
6 - 2ND CLUTCH PASSAGE SEAL
7 - 4TH CLUTCH PASSAGE SEAL
8 - OVERDRIVE ACCUMULATOR (1 SPRING)

INSTALLATION

(1) Check condition of seals on valve body and the solenoid and pressure switch assembly. Replace seals if cut or worn.

(2) Place TRS selector plate in the PARK position.

(3) Place the transmission in the PARK position.

(4) Lubricate seal on the solenoid and pressure switch assembly connector with petroleum jelly.

(5) Position valve body in transmission and align the manual lever on the valve body to the pin on the transmission manual shift lever.

(6) Seat valve body in case and install one or two bolts to hold valve body in place.

(7) Tighten valve body bolts alternately and evenly to 12 N·m (105 in. lbs.) torque.

(8) Install new fluid filter on valve body. Tighten filter screws to 4.5 N·m (40 in. lbs.) torque.

(9) Connect the solenoid and pressure switch assembly connector.

(10) Install oil pan. Tighten pan bolts to 12 N·m (105 in. lbs.) torque.

(11) Lower vehicle and fill transmission with Mopar® ATF +4, type 9602, fluid.

(12) Check and adjust gearshift cable, if necessary.

TIRES/WHEELS

TABLE OF CONTENTS

	page
TIRES/WHEELS	
DIAGNOSIS AND TESTING	1
TIRE AND WHEEL RUNOUT	1
STANDARD PROCEDURE	2
TIRE AND WHEEL BALANCE	2
MATCH MOUNTING	2
TIRE ROTATION	4
TIRES	
DESCRIPTION	5
DIAGNOSIS AND TESTING	7
PRESSURE GAUGES	7
TREAD WEAR INDICATORS	7
TIRE WEAR PATTERNS	7
TIRE NOISE OR VIBRATION	7
STANDARD PROCEDURE	7
REPAIRING LEAKS	7
CLEANING	8
SPECIFICATIONS	8
SPARE TIRE	
DESCRIPTION	8
WHEELS	
DESCRIPTION	8
DIAGNOSIS AND TESTING	9
WHEEL INSPECTION	9
STANDARD PROCEDURE	9
WHEEL REPLACEMENT	9
SPECIFICATIONS	10
STUDS	
REMOVAL	10
INSTALLATION	10

TIRES/WHEELS

DIAGNOSIS AND TESTING - TIRE AND WHEEL RUNOUT

Radial runout is the difference between the high and low points on the tire or wheel (Fig. 1).

Lateral runout is the **wobble** of the tire or wheel.

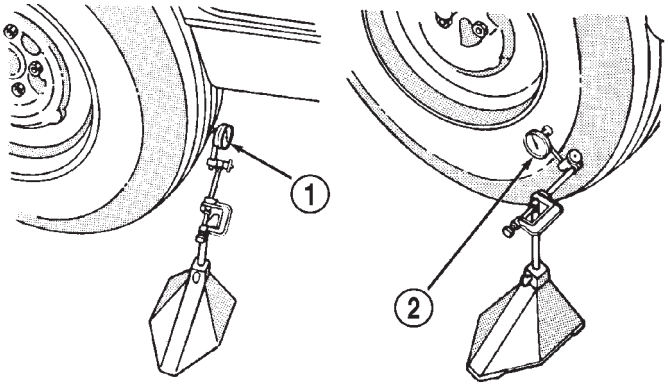

Fig. 1 Checking Tire/Wheel/Hub Runout

1 - RADIAL RUNOUT
2 - LATERAL RUNOUT

Radial runout of more than 1.5 mm (.060 inch) measured at the center line of the tread may cause the vehicle to shake.

Lateral runout of more than 2.0 mm (.080 inch) measured near the shoulder of the tire may cause the vehicle to shake.

Sometimes radial runout can be reduced. Relocate the wheel and tire assembly on the mounting studs (See Method 1). If this does not reduce runout to an acceptable level, the tire can be rotated on the wheel. (See Method 2).

METHOD 1 (RELOCATE WHEEL ON HUB)

(1) Drive vehicle a short distance to eliminate tire flat spotting from a parked position.

(2) Check wheel bearings and adjust if adjustable or replace if necessary.

(3) Check the wheel mounting surface.

(4) Relocate wheel on the mounting, two studs over from the original position.

(5) Tighten wheel nuts until all are properly torqued, to eliminate brake distortion.

(6) Check radial runout. If still excessive, mark tire sidewall, wheel, and stud at point of maximum runout and proceed to Method 2.

METHOD 2 (RELOCATE TIRE ON WHEEL)

NOTE: Rotating the tire on wheel is particularly effective when there is runout in both tire and wheel.

(1) Remove tire from wheel and mount wheel on service dynamic balance machine.

(2) Check wheel radial runout (Fig. 2) and lateral runout (Fig. 3).

TIRES/WHEELS (Continued)

- STEEL WHEELS: Radial runout 0.040 in., Lateral runout 0.045 in. (maximum)
- ALUMINUM WHEELS: Radial runout 0.030 in., Lateral runout 0.035 in. (maximum)

(3) If point of greatest wheel lateral runout is near original chalk mark, remount tire 180 degrees. Recheck runout, Refer to match mounting procedure.

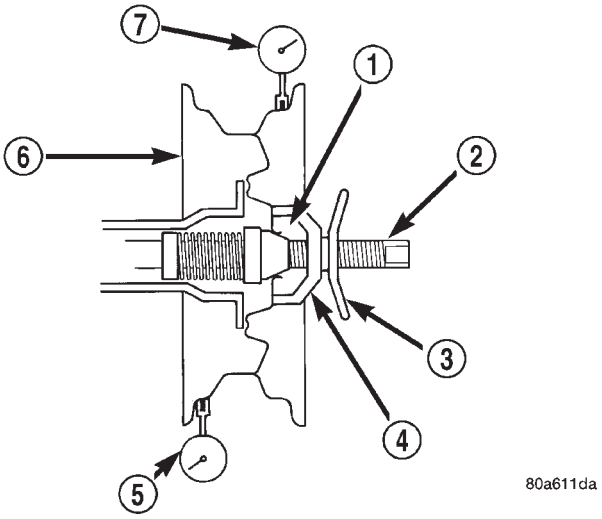

Fig. 2 Radial Runout

1 - MOUNTING CONE
2 - SPINDLE SHAFT
3 - WING NUT
4 - PLASTIC CUP
5 - DIAL INDICATOR
6 - WHEEL
7 - DIAL INDICATOR

STANDARD PROCEDURES - TIRE AND WHEEL BALANCE

It is recommended that a two plane service dynamic balancer be used when a tire and wheel assembly require balancing. Refer to balancer operation instructions for proper cone mounting procedures. Typically use front cone mounting method for steel wheels. For aluminum wheel use back cone mounting method without cone spring.

NOTE: Static should be used only when a two plane balancer is not available.

NOTE: Cast aluminum and forged aluminum wheels require coated balance weights and special alignment equipment.

Wheel balancing can be accomplished with either on or off vehicle equipment. When using on-vehicle balancing equipment, remove the opposite wheel/tire. Off-vehicle balancing is recommended.

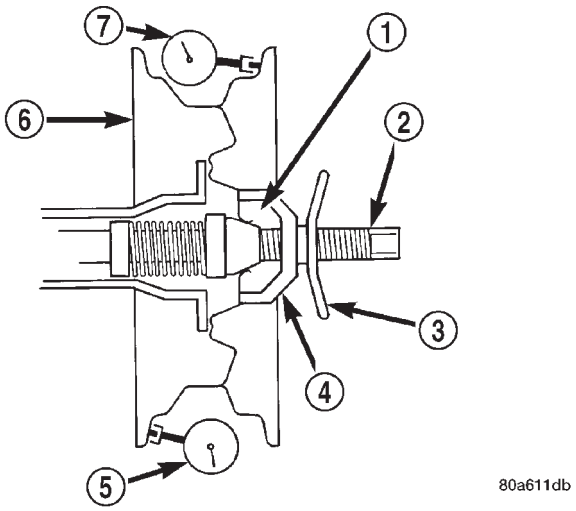

Fig. 3 Lateral Runout

1 - MOUNTING CONE
2 - SPINDLE SHAFT
3 - WING NUT
4 - PLASTIC CUP
5 - DIAL INDICATOR
6 - WHEEL
7 - DIAL INDICATOR

For static balancing, find the location of the heavy spot causing the imbalance. Counter balance wheel directly opposite the heavy spot. Determine weight required to counter balance the area of imbalance. Place half of this weight on the **inner** rim flange and the other half on the **outer** rim flange (Fig. 4).

For dynamic balancing, the balancing equipment is designed to locate the amount of weight to be applied to both the inner and outer rim flange (Fig. 5).

STANDARD PROCEDURE - MATCH MOUNTING

Tires and wheels are currently not match mounted at the factory. Match mounting is a technique used to reduce runout in the wheel/tire assembly. This means that the high spot of the tire is aligned with the low spot on the wheel rim. The high spot on the tire is marked with a paint mark or a bright colored adhesive label on the outboard sidewall. The low spot on the rim is identified with a label on the outside of the rim and a dot on the inside of the rim. If the outside label has been removed the tire will have to be removed to locate the dot on the inside of the rim.

Before dismounting a tire from its wheel, a reference mark should be placed on the tire at the valve stem location. This reference will ensure that it is remounted in the original position on the wheel.

(1) Use a dial indicator to locate the high spot of the tire on the center tread rib (Fig. 6). Record the indicator reading and mark the high spot on the tire.

TIRES/WHEELS (Continued)

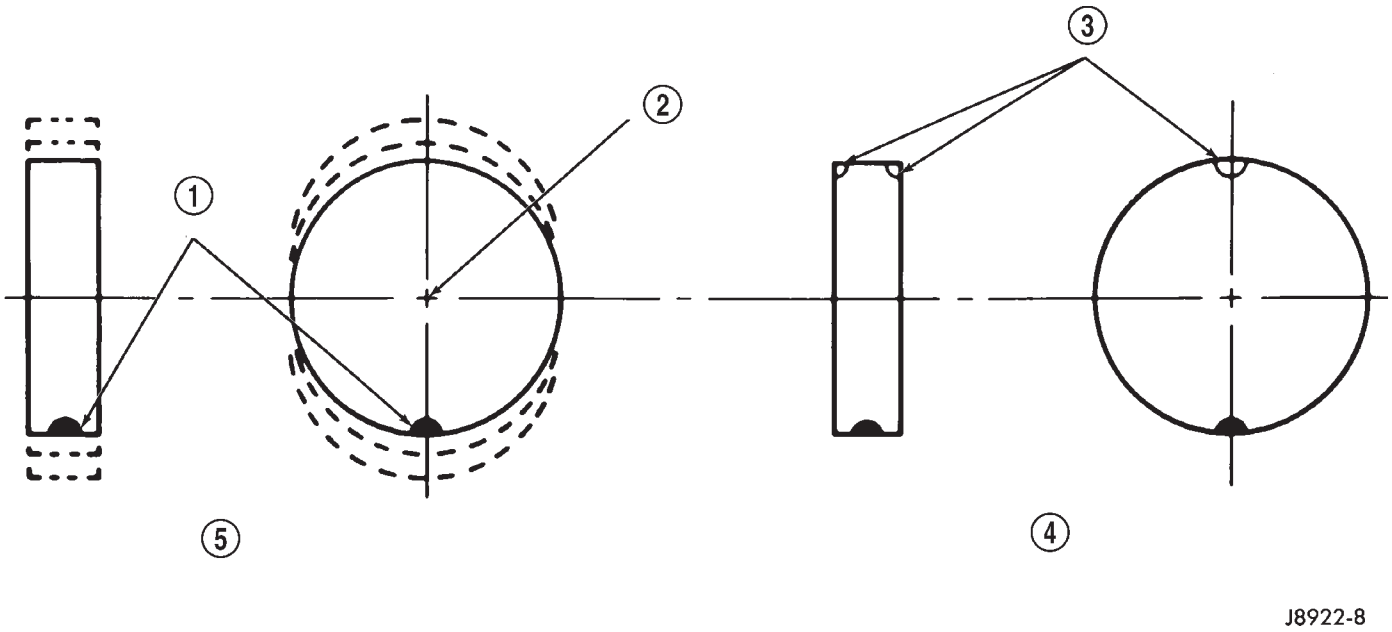

Fig. 4 Static Unbalance & Balance

1 - HEAVY SPOT
2 - CENTER LINE OF SPINDLE
3 - ADD BALANCE WEIGHTS HERE
4 - CORRECTIVE WEIGHT LOCATION
5 - TIRE OR WHEEL TRAMP, OR WHEEL HOP

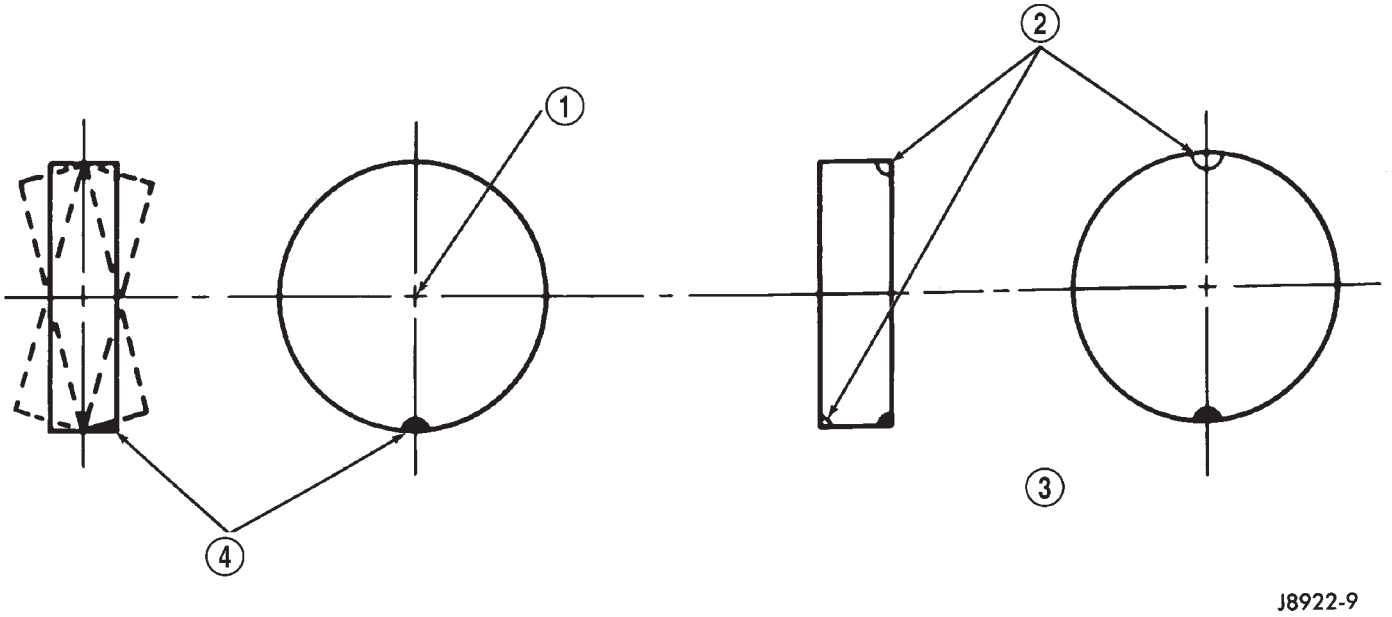

Fig. 5 Dynamic Unbalance & Balance

1 - CENTER LINE OF SPINDLE
2 - ADD BALANCE WEIGHTS HERE
3 - CORRECTIVE WEIGHT LOCATION
4 - HEAVY SPOT WHEEL SHIMMY AND VIBRATION

TIRES/WHEELS (Continued)

Place a mark on the tire at the valve stem location (Fig. 7).

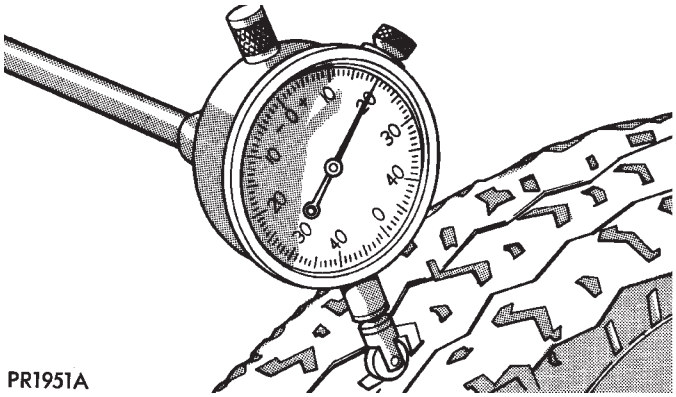

Fig. 6 Dial Indicator

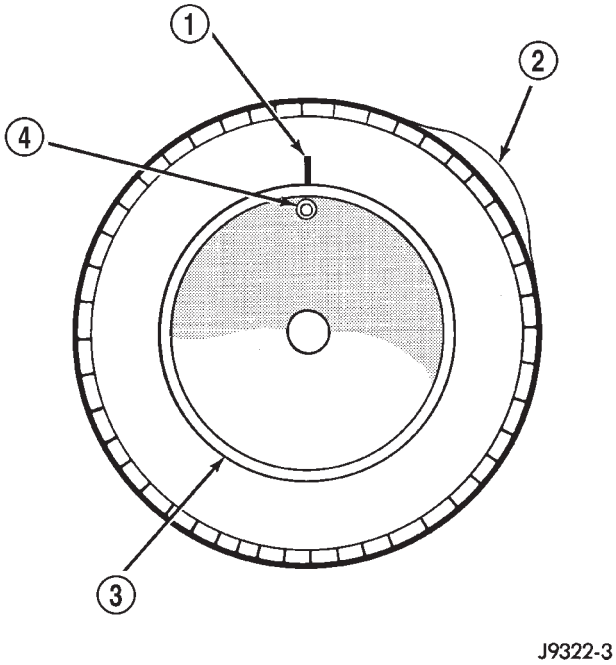

Fig. 7 First Measurement On Tire

1 - REFERENCE MARK
2 - 1ST MEASUREMENT
HIGH SPOT MARK TIRE AND RIM
3 - WHEEL
4 - VALVE STEM

(2) Break down the tire and remount it 180 degrees on the rim (Fig. 8).

(3) Measure the total runout again and mark the tire to indicate the high spot.

(4) If runout is still excessive use the following procedures.

(a) If the high spot is within 101.6 mm (4.0 in.) of the first spot and is still excessive, replace the tire.

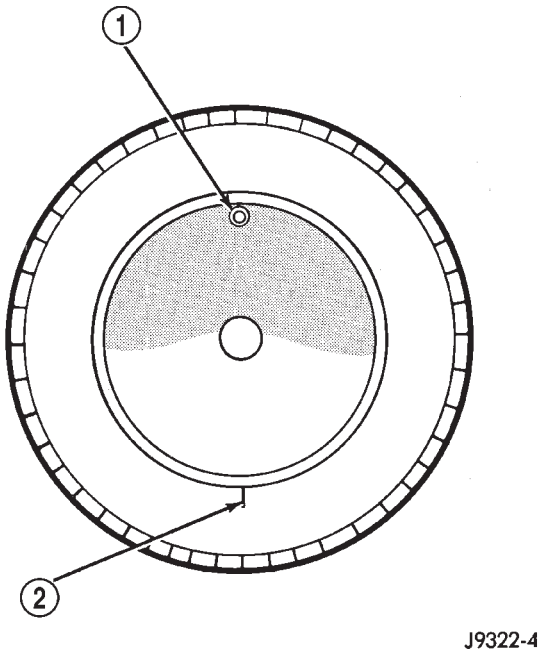

Fig. 8 Remount Tire 180 Degrees

1 - VALVE STEM
2 - REFERENCE MARK

(b) If the high spot is within 101.6 mm (4.0 in.) of the first spot on the wheel, the wheel may be out of specifications,(Refer to 22 - TIRES/WHEELS - DIAGNOSIS AND TESTING).

(c) If the high spot is NOT within 101.6 mm (4.0 in.) of either high spot, draw an arrow on the tread from second high spot to first. Break down the tire and remount it 90 degrees on rim in that direction (Fig. 9). This procedure will normally reduce the runout to an acceptable amount.

STANDARD PROCEDURES - TIRE ROTATION

Tires on the front and rear operate at different loads and perform different steering, driving, and braking functions. For these reasons they wear at unequal rates and tend to develop irregular wear patterns. These effects can be reduced by rotating the tires at regular intervals. The benefits of tire rotation are:

- Increase tread life
- Maintain traction levels
- A smooth, quiet ride

The suggested method of tire rotation is (Fig. 10). Other rotation methods can be used, but they will not provide all the tire longevity benefits.

TIRES/WHEELS (Continued)

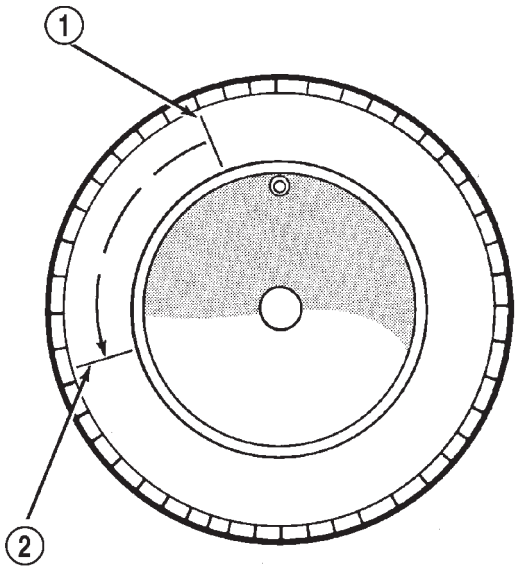

Fig. 9 Remount Tire 90 Degrees In Direction of Arrow

1 - 2ND HIGH SPOT ON TIRE
2 - 1ST HIGH SPOT ON TIRE

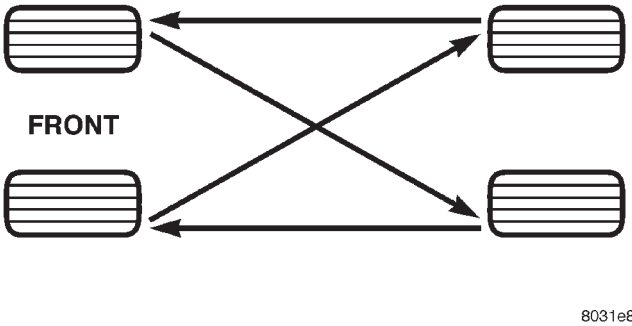

Fig. 10 Tire Rotation Pattern

TIRES

DESCRIPTION - TIRES

Tires are designed and engineered for each specific vehicle. They provide the best overall performance for normal operation. The ride and handling characteristics match the vehicle's requirements. With proper care they will give excellent reliability, traction, skid resistance, and tread life.

Driving habits have more effect on tire life than any other factor. Careful drivers will obtain in most cases, much greater mileage than severe use or careless drivers. A few of the driving habits which will shorten the life of any tire are:

- Rapid acceleration
- Severe brake applications
- High speed driving
- Excessive speeds on turns
- Striking curbs and other obstacles

Radial-ply tires are more prone to irregular tread wear. It is important to follow the tire rotation interval shown in the section on Tire Rotation.(Refer to 22 - TIRES/WHEELS - STANDARD PROCEDURE), This will help to achieve a greater tread life.

TIRE IDENTIFICATION

Tire type, size, aspect ratio and speed rating are encoded in the letters and numbers imprinted on the side wall of the tire. Refer to the chart to decipher the tire identification code (Fig. 11).

Performance tires have a speed rating letter after the aspect ratio number. The speed rating is not always printed on the tire sidewall. These ratings are:

- **Q** up to 100 mph
- **S** up to 112 mph
- **T** up to 118 mph
- **U** up to 124 mph
- **H** up to 130 mph
- **V** up to 149 mph
- **Z** more than 149 mph (consult the tire manufacturer for the specific speed rating)

An All Season type tire will have either **M + S, M & S or M–S** (indicating mud and snow traction) imprinted on the side wall.

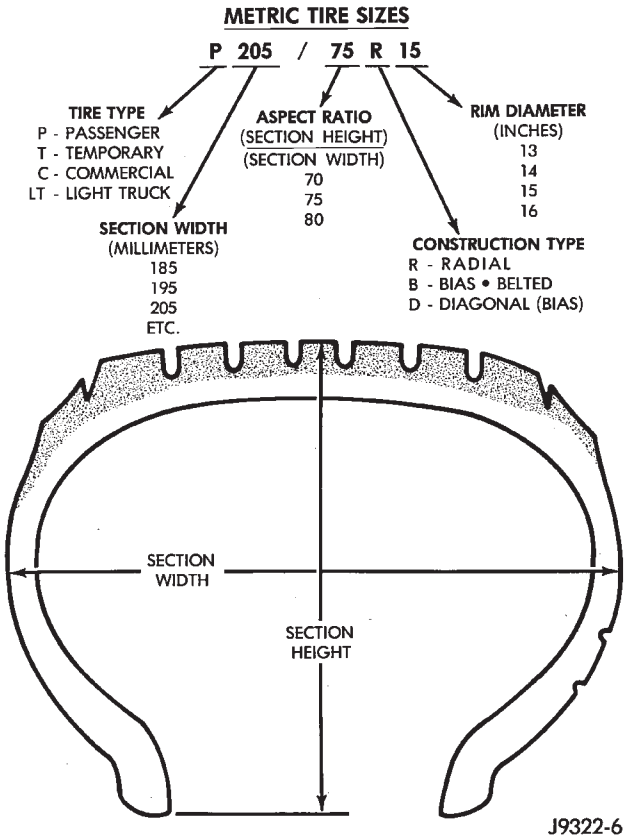

Fig. 11 Tire Identification

TIRES (Continued)

TIRE CHAINS

Tire snow chains may be used on **certain** models. Refer to the Owner's Manual for more information.

DESCRIPTION - RADIAL–PLY TIRES

Radial-ply tires improve handling, tread life and ride quality, and decrease rolling resistance.

Radial-ply tires must always be used in sets of four. Under no circumstances should they be used on the front only. They may be mixed with temporary spare tires when necessary. A maximum speed of 50 MPH is recommended while a temporary spare is in use.

Radial-ply tires have the same load-carrying capacity as other types of tires of the same size. They also use the same recommended inflation pressures.

The use of oversized tires, either in the front or rear of the vehicle, can cause vehicle drive train failure. This could also cause inaccurate wheel speed signals when the vehicle is equipped with Anti-Lock Brakes.

The use of tires from different manufactures on the same vehicle is NOT recommended. The proper tire pressure should be maintained on all four tires.

DESCRIPTION - TIRE INFLATION PRESSURES

Under inflation will cause rapid shoulder wear, tire flexing, and possible tire failure (Fig. 12).

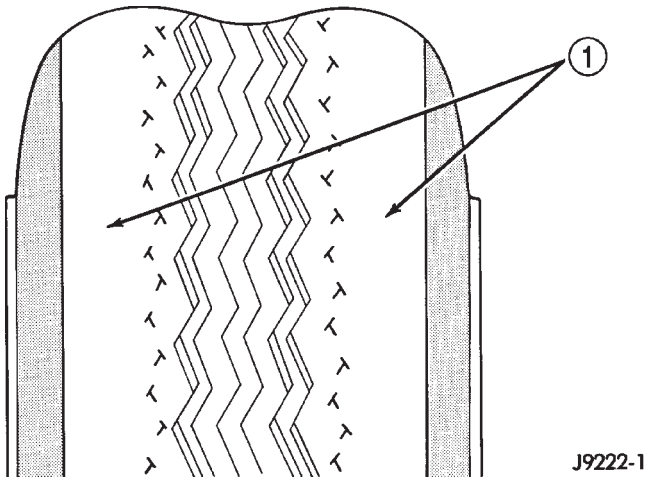

Fig. 12 Under Inflation Wear

1 - THIN TIRE THREAD AREAS

Over inflation will cause rapid center wear and loss of the tire's ability to cushion shocks (Fig. 13).

Improper inflation can cause:

- Uneven wear patterns
- Reduced tread life
- Reduced fuel economy
- Unsatisfactory ride
- Vehicle drift

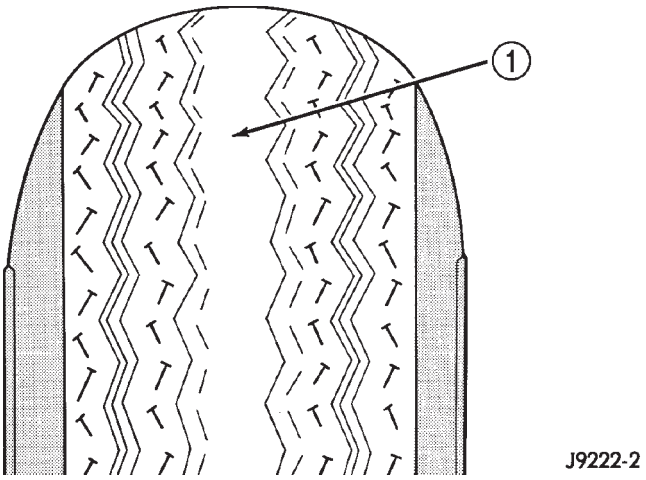

Fig. 13 Over Inflation Wear

1 - THIN TIRE THREAD AREA

For proper tire pressure specification refer to the Tire Inflation Pressure Chart provided with the vehicles Owners Manual. A Certification Label on the drivers side door pillar provides the minimum tire and rim size for the vehicle. The label also list the cold inflation pressure for these tires at full load operation

Tire pressures have been chosen to provide safe operation, vehicle stability, and a smooth ride. Tire pressure should be checked cold once a month. Tire pressure decreases as the ambient temperature drops. Check tire pressure frequently when ambient temperature varies widely.

Tire inflation pressures are cold inflation pressure. The vehicle must sit for at least 3 hours to obtain the correct cold inflation pressure reading. Or be driven less than one mile after sitting for 3 hours. Tire inflation pressures may increase from 2 to 6 pounds per square inch (psi) during operation. Do not reduce this normal pressure build-up.

WARNING: OVER OR UNDER INFLATED TIRES CAN AFFECT VEHICLE HANDLING AND TREAD WEAR. THIS MAY CAUSE THE TIRE TO FAIL SUDDENLY, RESULTING IN LOSS OF VEHICLE CONTROL.

DESCRIPTION - TIRE PRESSURE FOR HIGH SPEED

Where speed limits allow the vehicle to be driven at high speeds, correct tire inflation pressure is very important. For speeds up to and including 120 km/h (75 mph), tires must be inflated to the pressures shown on the tire placard. For continuous speeds in excess of 120 km/h (75 mph), tires must be inflated to the maximum pressure specified on the tire sidewall.

TIRES (Continued)

Vehicles loaded to the maximum capacity should not be driven at continuous speeds above 75 mph (120 km/h).

For emergency vehicles that are driven at speeds over 90 mph (144 km/h), special high speed tires must be used. Consult tire manufacturer for correct inflation pressure recommendations.

DESCRIPTION - REPLACEMENT TIRES

The original equipment tires provide a proper balance of many characteristics such as:

- Ride
- Noise
- Handling
- Durability
- Tread life
- Traction
- Rolling resistance
- Speed capability

It is recommended that tires equivalent to the original equipment tires be used when replacement is needed.

Failure to use equivalent replacement tires may adversely affect the safety and handling of the vehicle.

The use of oversize tires may cause interference with vehicle components. Under extremes of suspension and steering travel, interference with vehicle components may cause tire damage.

WARNING: FAILURE TO EQUIP THE VEHICLE WITH TIRES HAVING ADEQUATE SPEED CAPABILITY CAN RESULT IN SUDDEN TIRE FAILURE.

DIAGNOSIS AND TESTING - PRESSURE GAUGES

A quality air pressure gauge is recommended to check tire pressure. After checking the air pressure, replace valve cap finger tight.

DIAGNOSIS AND TESTING - TREAD WEAR INDICATORS

Tread wear indicators are molded into the bottom of the tread grooves. When tread depth is 1.6 mm (1/16 in.), the tread wear indicators will appear as a 13 mm (1/2 in.) band (Fig. 14).

Tire replacement is necessary when indicators appear in two or more grooves or if localized balding occurs.

DIAGNOSIS AND TESTING - TIRE WEAR PATTERNS

Under inflation will cause wear on the shoulders of tire. Over inflation will cause wear at the center of tire.

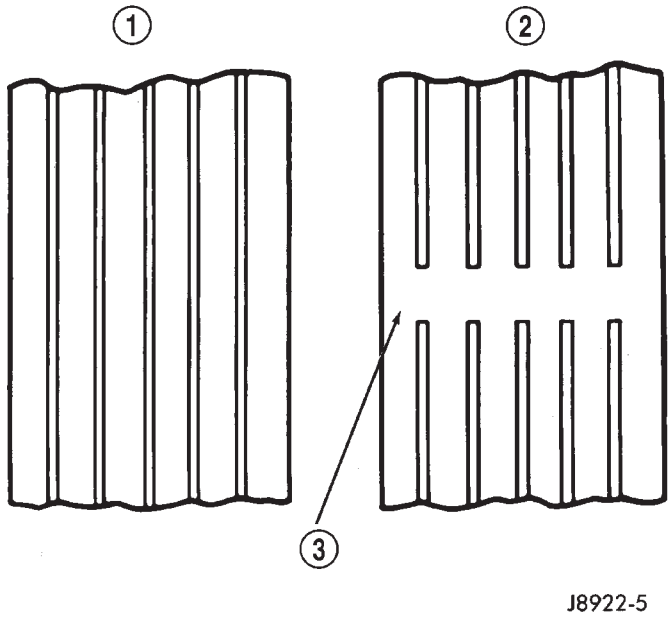

Fig. 14 Tread Wear Indicators

1 - TREAD ACCEPTABLE
2 - TREAD UNACCEPTABLE
3 - WEAR INDICATOR

Excessive camber causes the tire to run at an angle to the road. One side of tread is then worn more than the other (Fig. 15).

Excessive toe-in or toe-out causes wear on the tread edges and a feathered effect across the tread (Fig. 15).

DIAGNOSIS AND TESTING - TIRE NOISE OR VIBRATION

Radial-ply tires are sensitive to force impulses caused by improper mounting, vibration, wheel defects, or possibly tire imbalance.

To find out if tires are causing the noise or vibration, drive the vehicle over a smooth road at varying speeds. Note the noise level during acceleration and deceleration. The engine, differential and exhaust noises will change as speed varies, while the tire noise will usually remain constant.

STANDARD PROCEDURE - REPAIRING LEAKS

For proper repairing, a radial tire must be removed from the wheel. Repairs should only be made if the defect, or puncture, is in the tread area (Fig. 16). The tire should be replaced if the puncture is located in the sidewall.

Deflate tire completely before removing the tire from the wheel. Use lubrication such as a mild soap solution when dismounting or mounting tire. Use tools free of burrs or sharp edges which could damage the tire or wheel rim.

TIRES (Continued)

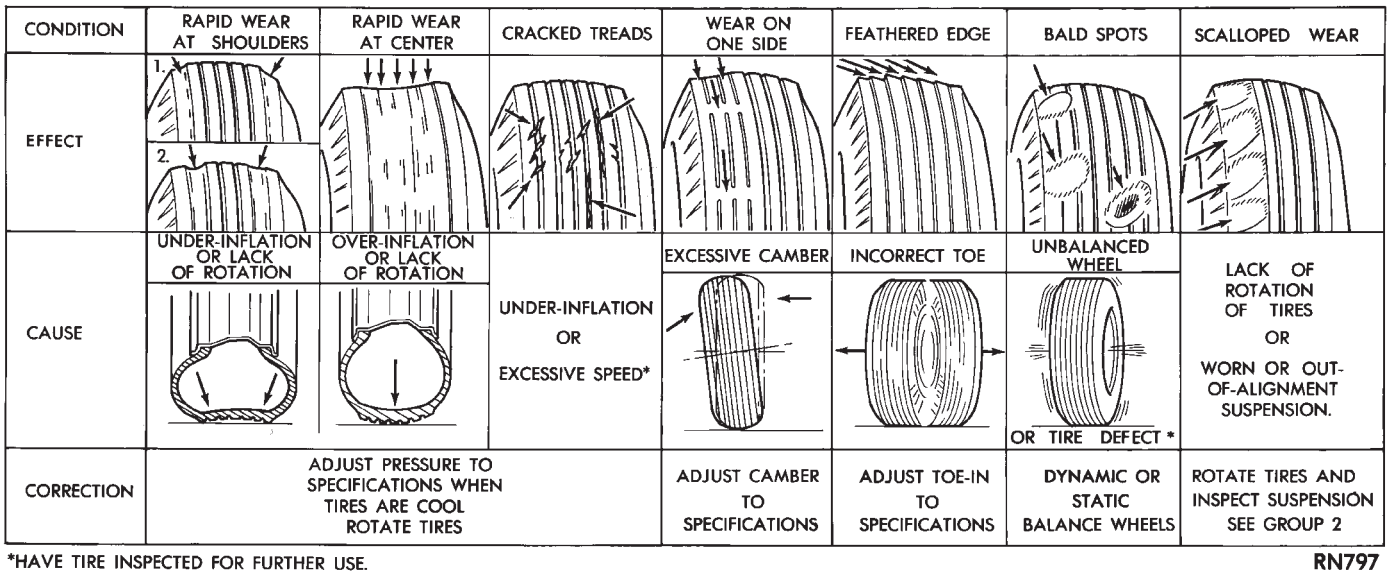

Fig. 15 Tire Wear Patterns

Before mounting tire on wheel, make sure all rust is removed from the rim bead and repaint if necessary.

Install wheel on vehicle, and tighten to proper torque specification.

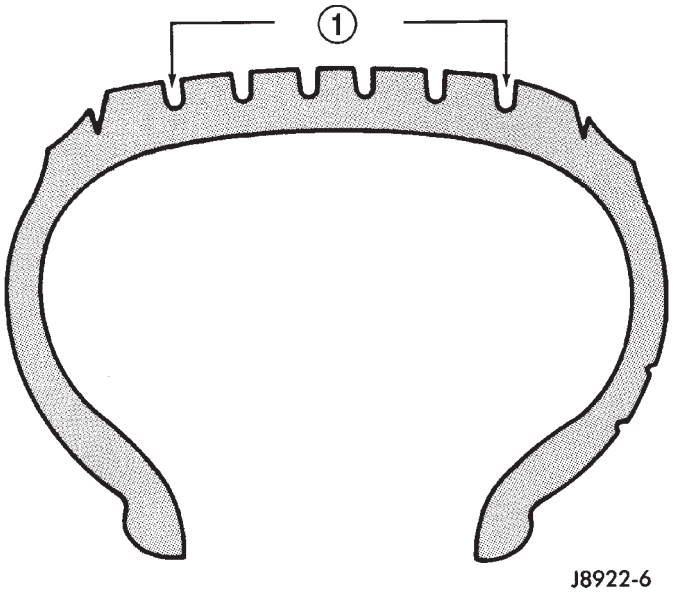

Fig. 16 Tire Repair Area

1 - REPAIRABLE AREA

CLEANING

Remove the protective coating on the tires before delivery of a vehicle. This coating may cause deterioration of the tires.

To remove the protective coating, apply warm water and let it soak for a few minutes. Afterwards, scrub the coating away with a soft bristle brush. Steam cleaning may also be used to remove the coating.

NOTE: DO NOT use gasoline, mineral oil, oil-based solvent or a wire brush for cleaning.

SPECIFICATIONS

TIRES

SPECIFICATIONS

DESCRIPTION	SPECIFICATION
TIRE	P225/75R16
TIRE	P245/70R16

SPARE TIRE

DESCRIPTION - SPARE / TEMPORARY TIRE

The temporary spare tire is designed for emergency use only. The original tire should be repaired or replaced at the first opportunity, then reinstalled. Do not exceed speeds of 50 M.P.H. when using the temporary spare tire. Refer to Owner's Manual for complete details.

WHEELS

DESCRIPTION

The rim size is on the vehicle safety certification label located on the drivers door shut face. The size of the rim is determined by the drivetrain package. Original equipment wheels/rims are designed for operation up to the specified maximum vehicle capacity.

WHEELS (Continued)

All models use stamped steel, cast aluminum or forged aluminum wheels. Every wheel has raised sections between the rim flanges and rim drop well called safety humps (Fig. 17).

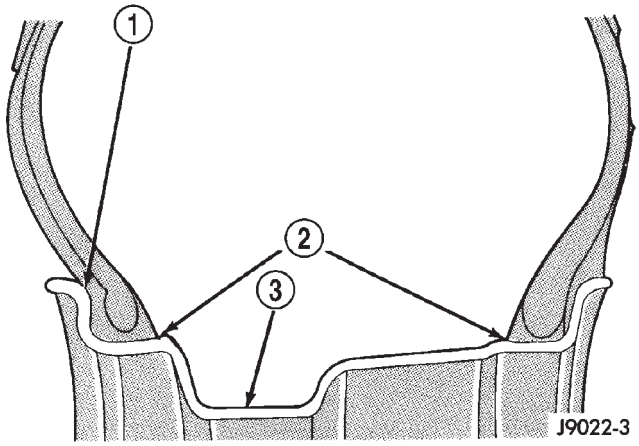

Fig. 17 Safety Rim

1 - FLANGE
2 - RIDGE
3 - WELL

Initial inflation of the tire forces the bead over these raised sections. In case of rapid loss of air pressure, the raised sections help hold the tire on the wheel.

The wheel studs and nuts are designed for specific applications. All aluminum and some steel wheels have wheel stud nuts with an enlarged nose. This enlarged nose is necessary to ensure proper retention of the wheels. Do not use replacement studs or nuts with a different design or lesser quality.

DIAGNOSIS AND TESTING - WHEEL INSPECTION

Inspect wheels for:

- Excessive run out
- Dents or cracks
- Damaged wheel lug nut holes
- Air Leaks from any area or surface of the rim

NOTE: Do not attempt to repair a wheel by hammering, heating or welding.

If a wheel is damaged an original equipment replacement wheel should be used. When obtaining replacement wheels, they should be equivalent in load carrying capacity. The diameter, width, offset, pilot hole and bolt circle of the wheel should be the same as the original wheel.

WARNING: FAILURE TO USE EQUIVALENT REPLACEMENT WHEELS MAY ADVERSELY AFFECT THE SAFETY AND HANDLING OF THE VEHICLE. USED WHEELS ARE NOT RECOMMENDED. THE SERVICE HISTORY OF THE WHEEL MAY HAVE INCLUDED SEVERE TREATMENT OR VERY HIGH MILEAGE. THE RIM COULD FAIL WITHOUT WARNING.

STANDARD PROCEDURE - WHEEL REPLACEMENT

The wheel studs and nuts are designed for specific applications. They must be replaced with equivalent parts. Do not use replacement parts of lesser quality or a substitute design. All aluminum and some steel wheels have wheel stud nuts which feature an enlarged nose. This enlarged nose is necessary to ensure proper retention of the aluminum wheels.

NOTE: Do not use chrome plated lug nuts with chrome plated wheels.

Before installing the wheel, be sure to remove any build up of corrosion on the wheel mounting surfaces. Ensure wheels are installed with good metal-to-metal contact. Improper installation could cause loosening of wheel nuts. This could affect the safety and handling of your vehicle.

To install the wheel, first position it properly on the mounting surface. All wheel nuts should then be tightened just snug. Gradually tighten them in sequence to the proper torque specification. **Never use oil or grease on studs or nuts.**

Wheels must be replaced if they have:

- Excessive runout
- Bent or dented
- Leak air through welds
- Have damaged bolt holes

Wheel repairs employing hammering, heating, or welding are not allowed.

Original equipment wheels are available through your dealer. Replacement wheels from any other source should be equivalent in:

- Load carrying capacity
- Diameter
- Width
- Offset
- Mounting configuration

Failure to use equivalent replacement wheels may affect the safety and handling of your vehicle. Replacement with **used** wheels is not recommended. Their service history may have included severe treatment.

SPECIFICATIONS

TORQUE CHART

TORQUE SPECIFICATIONS

DESCRIPTION	N·m	Ft. Lbs.	In. Lbs.
Lug Nut 1/2 X 20 with 60° Cone	115-150	85-115	

STUDS

REMOVAL

CAUTION: Do not use a hammer to remove wheel studs.

(1) Raise and support vehicle.
(2) Remove wheel and tire assembly.
(3) Remove brake caliper, caliper adapter and rotor,(Refer to 5 - BRAKES/HYDRAULIC/MECHANICAL/DISC BRAKE CALIPERS - REMOVAL).
(4) Remove stud from hub with Remover C-4150A (Fig. 18).

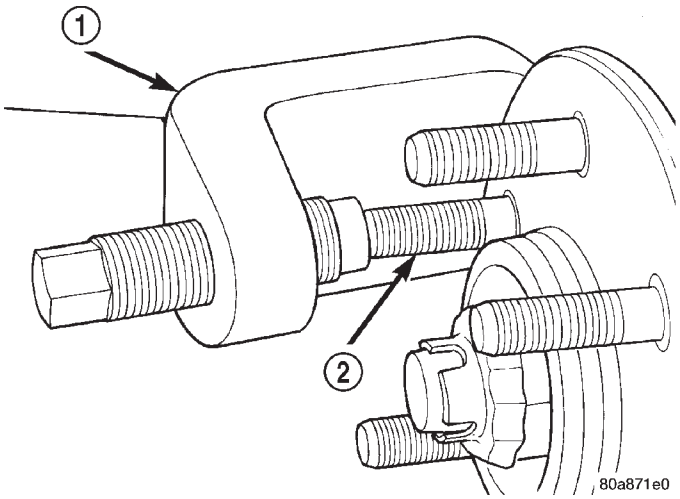

Fig. 18 Wheel Stud Removal

1 - REMOVER
2 - WHEEL STUD

INSTALLATION

CAUTION: Do not use a hammer to remove wheel studs.

(1) Install the new stud into the hub flange.
(2) Install the three washers onto the stud, then install the lug nut with the flat side of the nut against the washers.
(3) Tighten the lug nut until the stud is pulled into the hub flange. Verify that the stud is properly seated into the flange.
(4) Remove the lug nut and washers.
(5) Install the brake rotor, caliper adapter, and caliper,(Refer to 5 - BRAKES/HYDRAULIC/MECHANICAL/DISC BRAKE CALIPERS - INSTALLATION).
(6) Install the wheel and tire assembly, use new lug nut on stud or studs that were replaced.
(7) Remove the support and lower vehicle.

BODY

TABLE OF CONTENTS

page

BODY
DESCRIPTION 1
OPERATION 1
DIAGNOSIS AND TESTING 1
WATER LEAKS. 1
WIND NOISE 2
STANDARD PROCEDURE 3
STANDARD PROCEDURE - BODY LUBRICATION 3
STANDARD PROCEDURE - DRILLING AND WELDING 3
SPECIFICATIONS 4
SPECIAL TOOLS 92
DECKLID/HATCH/LIFTGATE/TAILGATE 93
DOOR - FRONT 99
DOORS - REAR 107
EXTERIOR 113
HOOD 121
INSTRUMENT PANEL SYSTEM 124
INTERIOR 158
PAINT 170
SEATS 172
STATIONARY GLASS 182
WEATHERSTRIP/SEALS 186

BODY

DESCRIPTION - COMPONENT FASTENERS

DaimlerChrysler Corporation uses many different types of push-in fasteners to secure the interior and exterior trim to the body. Most of these fasteners can be reused to assemble the trim during various repair procedures. At times, a push-in fastener cannot be removed without damaging the fastener or the component it is holding. If it is not possible to remove a fastener without damaging a component or body, cut or break the fastener and use a new one when installing the component. Never pry or pound on a plastic or pressed-board trim component. Using a suitable fork-type prying device, pry the fastener from the retaining hole behind the component being removed. When installing, verify fastener alignment with the retaining hole by hand. Push directly on or over the fastener until it seats. Apply a low-force pull to the panel to verify that it is secure.

When it is necessary to remove components to service another, it should not be necessary to apply excessive force or bend a component to remove it. Before damaging a trim component, verify hidden fasteners or captured edges holding the component in place.

DESCRIPTION - LOCK CYLINDERS

Ignition, door, deck lid, and rear hatch lock cylinders are all codable to the key. Lock barrels, tumblers, and tumbler springs are available to allow the technician to change replacement locks cylinders to match the customer's original key set. See the appropriate section in this manual for lock cylinder removal. See the Mopar® catalogue for part numbers and lock coding procedures.

DESCRIPTION

Exterior sheet metal components make up the exterior of the vehicle. Some exterior metal systems are welded assemblies, such as doors and hoods. Some exterior trim items are made of composite.

OPERATION

The exterior is finished in various metal stampings and composite moldings. These assemblies give the vehicle a finished appearance and protect the occupants from the elements. Some components are part of the energy absorbing system used to protect the occupants in collisions. The exterior sheet metal is repairable and adjustable for fit and finish. Welded and bonded component systems are adjustable as a system. Trim components made of composite are stamped with the type of material used. DaimlerChrysler uses various fasteners to retain trim items. At times, it is not possible to remove trim items without damaging the fastener. If it is not possible to remove an item without damaging a component, cut or break the fasteners and use new ones when installing the component.

DIAGNOSIS AND TESTING - WATER LEAKS

Water leaks can be caused by poor sealing, improper body component alignment, body seam porosity, missing plugs, or blocked drain holes. Centrifugal and gravitational force can cause water to drip from a location away from the actual leak point, making leak detection difficult. All body sealing points should be water tight in normal wet-driving

conditions. Water flowing downward from the front of the vehicle should not enter the passenger or luggage compartment. Moving sealing surfaces will not always seal water tight under all conditions. At times, side glass or door seals will allow water to enter the passenger compartment during high pressure washing or hard driving rain (severe) conditions. Overcompensating on door or glass adjustments to stop a water leak that occurs under severe conditions can cause premature seal wear and excessive closing or latching effort. After completing a repair, water test vehicle to verify leak has stopped before returning vehicle to use.

VISUAL INSPECTION BEFORE WATER LEAK TESTS

Verify that floor and body plugs are in place, body drains are clear, and body components are properly aligned and sealed. If component alignment or sealing is necessary, refer to the appropriate section of this group for proper procedures.

WATER LEAK TESTS

WARNING: DO NOT USE ELECTRIC SHOP LIGHTS OR TOOLS IN WATER TEST AREA. PERSONAL INJURY CAN RESULT.

When the conditions causing a water leak have been determined, simulate the conditions as closely as possible.

- If a leak occurs with the vehicle parked in a steady light rain, flood the leak area with an open-ended garden hose.
- If a leak occurs while driving at highway speeds in a steady rain, test the leak area with a reasonable velocity stream or fan spray of water. Direct the spray in a direction comparable to actual conditions.
- If a leak occurs when the vehicle is parked on an incline, hoist the end or side of the vehicle to simulate this condition. This method can be used when the leak occurs when the vehicle accelerates, stops or turns. If the leak occurs on acceleration, hoist the front of the vehicle. If the leak occurs when braking, hoist the back of the vehicle. If the leak occurs on left turns, hoist the left side of the vehicle. If the leak occurs on right turns, hoist the right side of the vehicle. For hoisting recommendations refer to Group 0, Lubrication and Maintenance, General Information section.

WATER LEAK DETECTION

To detect a water leak point-of-entry, do a water test and watch for water tracks or droplets forming on the inside of the vehicle. If necessary, remove interior trim covers or panels to gain visual access to the leak area. If the hose cannot be positioned without being held, have someone help do the water test.

Some water leaks must be tested for a considerable length of time to become apparent. When a leak appears, find the highest point of the water track or drop. The highest point usually will show the point of entry. After leak point has been found, repair the leak and water test to verify that the leak has stopped.

Locating the entry point of water that is leaking into a cavity between panels can be difficult. The trapped water may splash or run from the cavity, often at a distance from the entry point. Most water leaks of this type become apparent after accelerating, stopping, turning, or when on an incline.

MIRROR INSPECTION METHOD

When a leak point area is visually obstructed, use a suitable mirror to gain visual access. A mirror can also be used to deflect light to a limited-access area to assist in locating a leak point.

BRIGHT LIGHT LEAK TEST METHOD

Some water leaks in the luggage compartment can be detected without water testing. Position the vehicle in a brightly lit area. From inside the darkened luggage compartment inspect around seals and body seams. If necessary, have a helper direct a drop light over the suspected leak areas around the luggage compartment. If light is visible through a normally sealed location, water could enter through the opening.

PRESSURIZED LEAK TEST METHOD

When a water leak into the passenger compartment cannot be detected by water testing, pressurize the passenger compartment and soap test exterior of the vehicle. To pressurize the passenger compartment, close all doors and windows, start engine, and set heater control to high blower in HEAT position. If engine can not be started, connect a charger to the battery to ensure adequate voltage to the blower. With interior pressurized, apply dish detergent solution to suspected leak area on the exterior of the vehicle. Apply detergent solution with spray device or soft bristle brush. If soap bubbles occur at a body seam, joint, seal or gasket, the leak entry point could be at that location.

DIAGNOSIS AND TESTING - WIND NOISE

Wind noise is the result of most air leaks. Air leaks can be caused by poor sealing, improper body component alignment, body seam porosity, or missing plugs in the engine compartment or door hinge pillar areas. All body sealing points should be airtight in normal driving conditions. Moving sealing surfaces will not always seal airtight under all conditions. At times, side glass or door seals will allow wind noise to be

BODY (Continued)

noticed in the passenger compartment during high cross winds. Over compensating on door or glass adjustments to stop wind noise that occurs under severe conditions can cause premature seal wear and excessive closing or latching effort. After a repair procedure has been performed, test vehicle to verify noise has stopped before returning vehicle to use.

Wind noise can also be caused by improperly fitted exterior moldings or body ornamentation. Loose moldings can flutter, creating a buzzing or chattering noise. An open cavity or protruding edge can create a whistling or howling noise. Inspect the exterior of the vehicle to verify that these conditions do not exist.

VISUAL INSPECTION BEFORE TESTS

Verify that floor and body plugs are in place and body components are aligned and sealed. If component alignment or sealing is necessary, refer to the appropriate section of this group for proper procedures.

ROAD TESTING WIND NOISE

(1) Drive the vehicle to verify the general location of the wind noise.

(2) Apply 50 mm (2 in.) masking tape in 150 mm (6 in.) lengths along weatherstrips, weld seams or moldings. After each length is applied, drive the vehicle. If noise goes away after a piece of tape is applied, remove tape, locate, and repair defect.

POSSIBLE CAUSE OF WIND NOISE

- Moldings standing away from body surface can catch wind and whistle.
- Gaps in sealed areas behind overhanging body flanges can cause wind-rushing sounds.
- Misaligned movable components.
- Missing or improperly installed plugs in pillars.
- Weld burn through holes.

STANDARD PROCEDURES - BODY LUBRICATION

All mechanisms and linkages should be lubricated when necessary. This will maintain ease of operation and provide protection against rust and excessive wear. The weatherstrip seals should be lubricated to prolong their life as well as to improve door sealing.

All applicable exterior and interior vehicle operating mechanisms should be inspected and cleaned. Pivot/sliding contact areas on the mechanisms should then be lubricated.

(1) When necessary, lubricate the operating mechanisms with the specified lubricants.

(2) Apply silicone lubricant to a cloth and wipe it on door seals to avoid over-spray that can soil passenger's clothing.

(3) Before applying lubricant, the component should be wiped clean. After lubrication, any excess lubricant should be removed.

(4) The hood latch, latch release mechanism, latch striker, and safety latch should be lubricated periodically.

(5) The door lock cylinders should be lubricated twice each year (preferably autumn and spring).

(a) Spray a small amount of lock cylinder lubricant directly into the lock cylinder.

(b) Apply a small amount to the key and insert it into the lock cylinder.

(c) Rotate it to the locked position and then back to the unlocked position several times.

(d) Remove the key. Wipe the lubricant from it with a clean cloth to avoid soiling of clothing.

STANDARD PROCEDURES - DRILLING AND WELDING

When holes must be drilled or punched in an inner body panel, verify depth of space to the outer body panel, electrical wiring, or other components. Damage to vehicle can result.

Do not weld exterior panels unless combustible material on the interior of vehicle is removed from the repair area. Fire or hazardous conditions, can result.

Always have a fire extinguisher ready for use when welding.

SPECIFICATIONS

BODY LUBRICANTS

COMPONENT	SERVICE INTERVAL	LUBRICANT
Door Hinges	As Required	Multi-Purpose Grease NLGI GC-LB (Water Resistant) (1)
Door Latches	As Required	Multi-Purpose Grease NLGI GC-LB (Water Resistant) (1)
Hood Latch, Release Mechanism and Safety Latch	As Required (When Performing Other Underhood Service)	Multi-Purpose Grease NLGI GC-LB 2 EP (2)
Hood Hinges	As Required	Engine Oil
Seat Track and Release Mechanism	As Required	Multi-Purpose Grease NLGI GC-LB 2 EP (2)
Liftgate Hinge	As Required	Multi-Purpose Grease NLGI GC-LB 2 EP (2)
Liftgate Support Arms	As Required	Engine Oil
Liftgate Latches	As Required	White Spray Lubricant (3)
Liftgate Release Handle (Pivot and Slide Contact Surfaces)	As Required	Multi-Purpose Grease NLGI GC-LB 2 EP (2)
Window System Components	As Required	White Spray Lubricant (3)
Lock Cylinders	Twice a Year	Lock-Cylinder Lubricant (4)
Parking Brake Mechanism	As Required	Multi-Purpose Grease NLGI GC-LB 2 EP (1)
1 = Mopar Wheel Bearing Grease (High Temp) 2 = Mopar Multi-Mileage Lubricant 3 = Mopar Spray White Lube 4 = Mopar Lock Cylinder Lubricant		

SPECIFICATIONS (Continued)

WELD LOCATIONS

RADIATOR SUPPORT BRACKETS

W2 - WELDING OF 2 PARTS
W3 - WELDING OF 3 PARTS
W4 - WELDING OF 4 PARTS

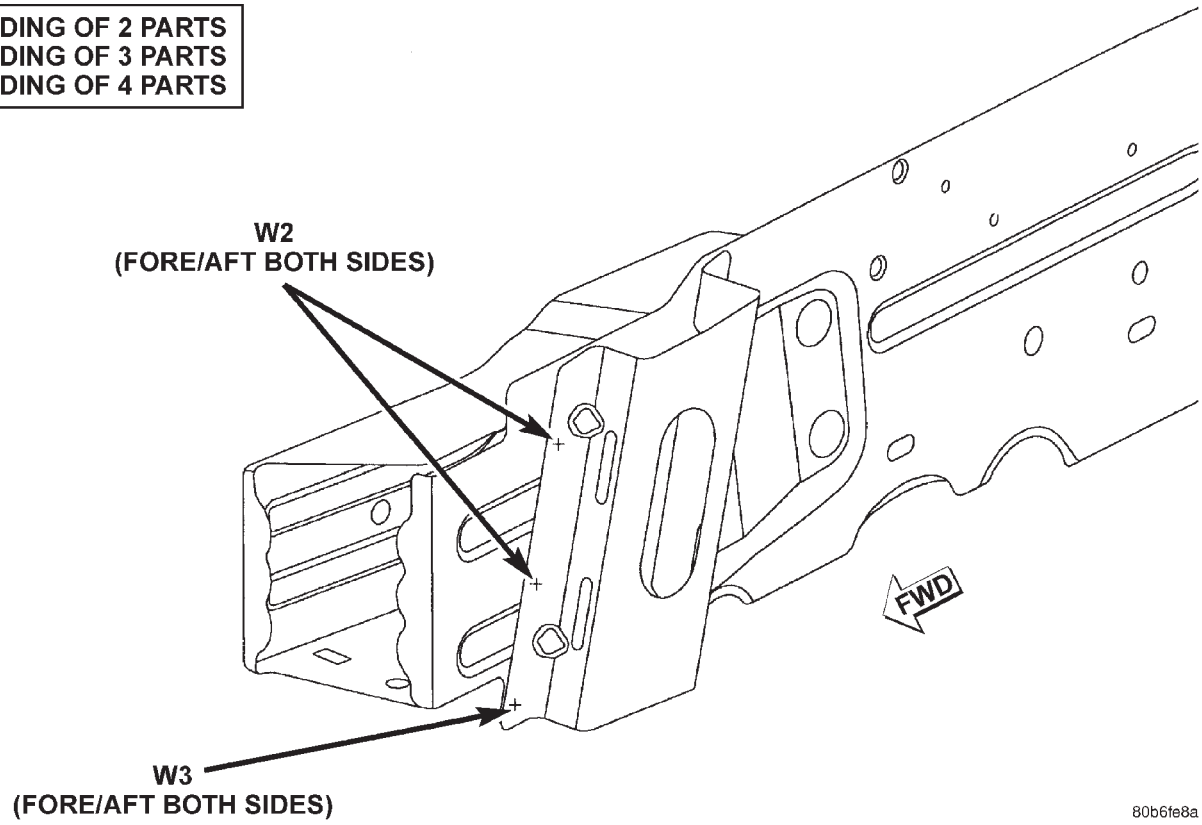

80b6fe8a

FRONT SUSPENSION SUPPORT REINFORCEMENT

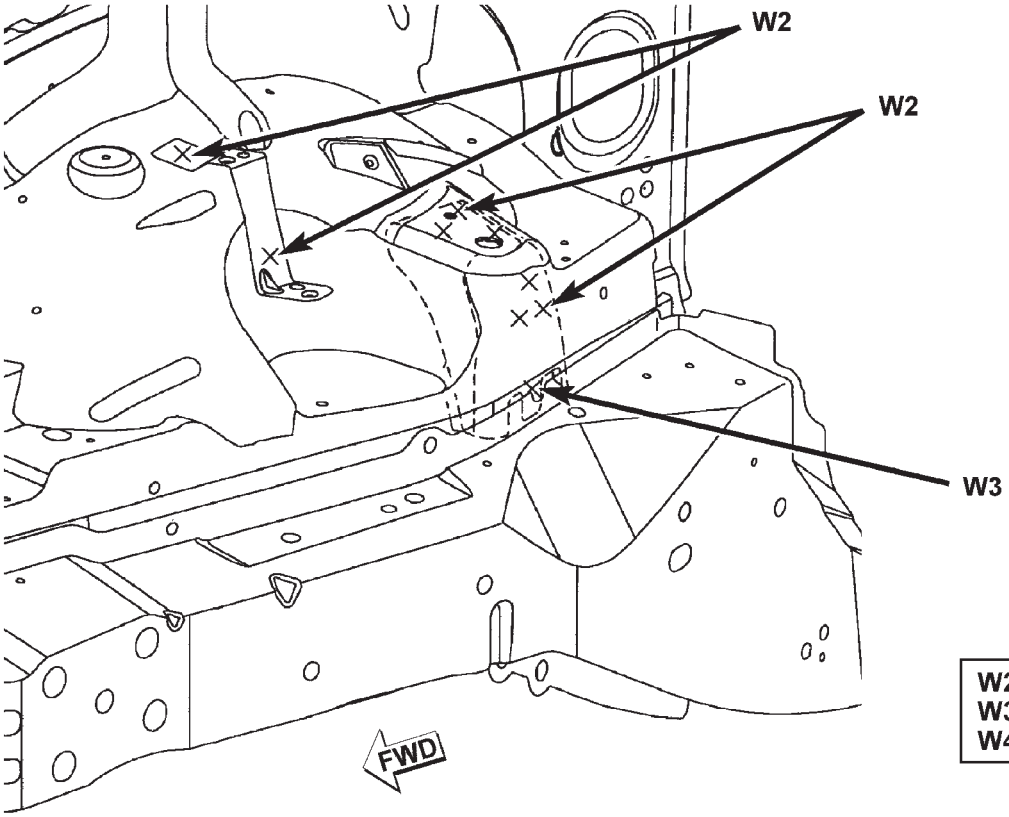

W2 - WELDING OF 2 PARTS
W3 - WELDING OF 3 PARTS
W4 - WELDING OF 4 PARTS

80b6fe8b

SPECIFICATIONS (Continued)

FRONT LOWER CROSSMEMBER TO COWL SIDE PANEL

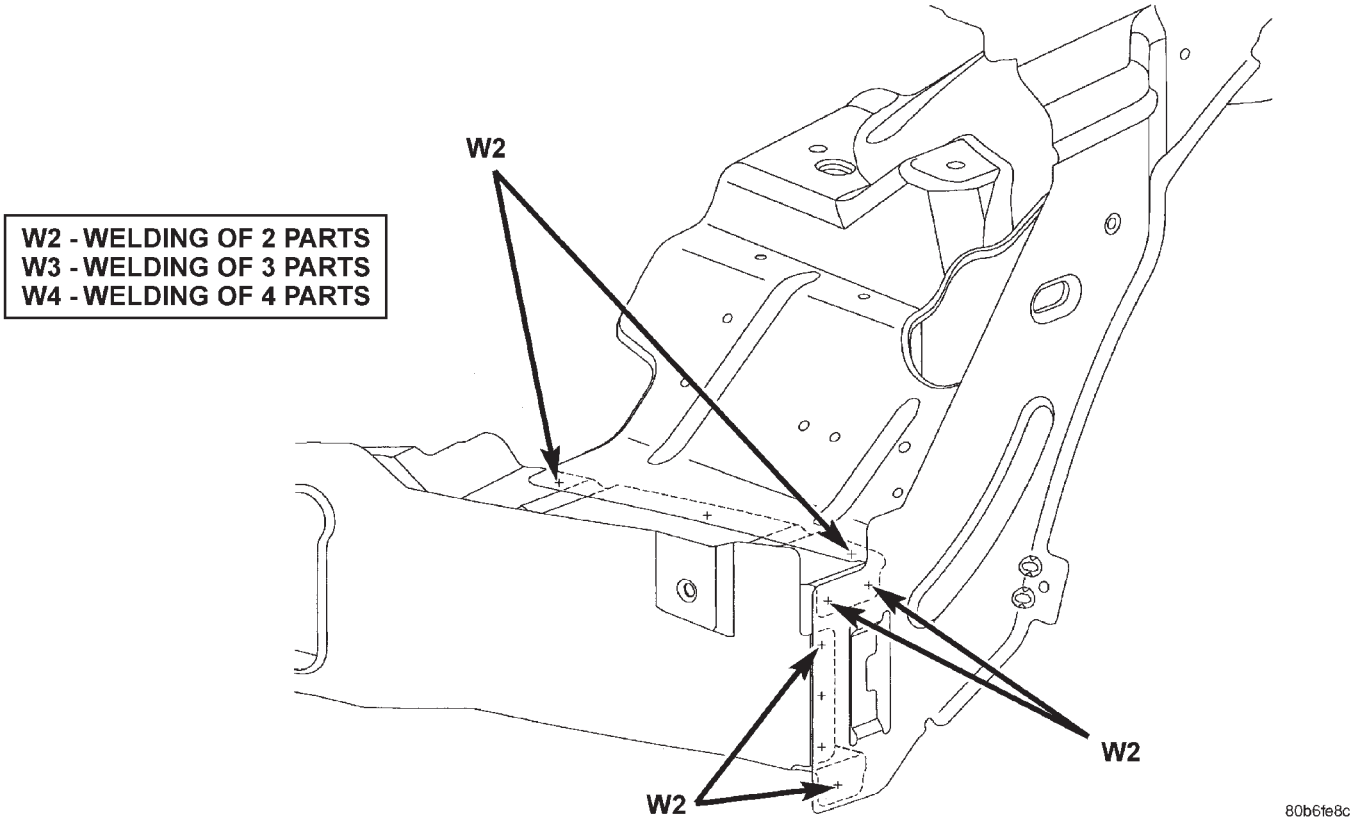

SPECIFICATIONS (Continued)

FRONT SILL TO LOWER CROSSMEMBER

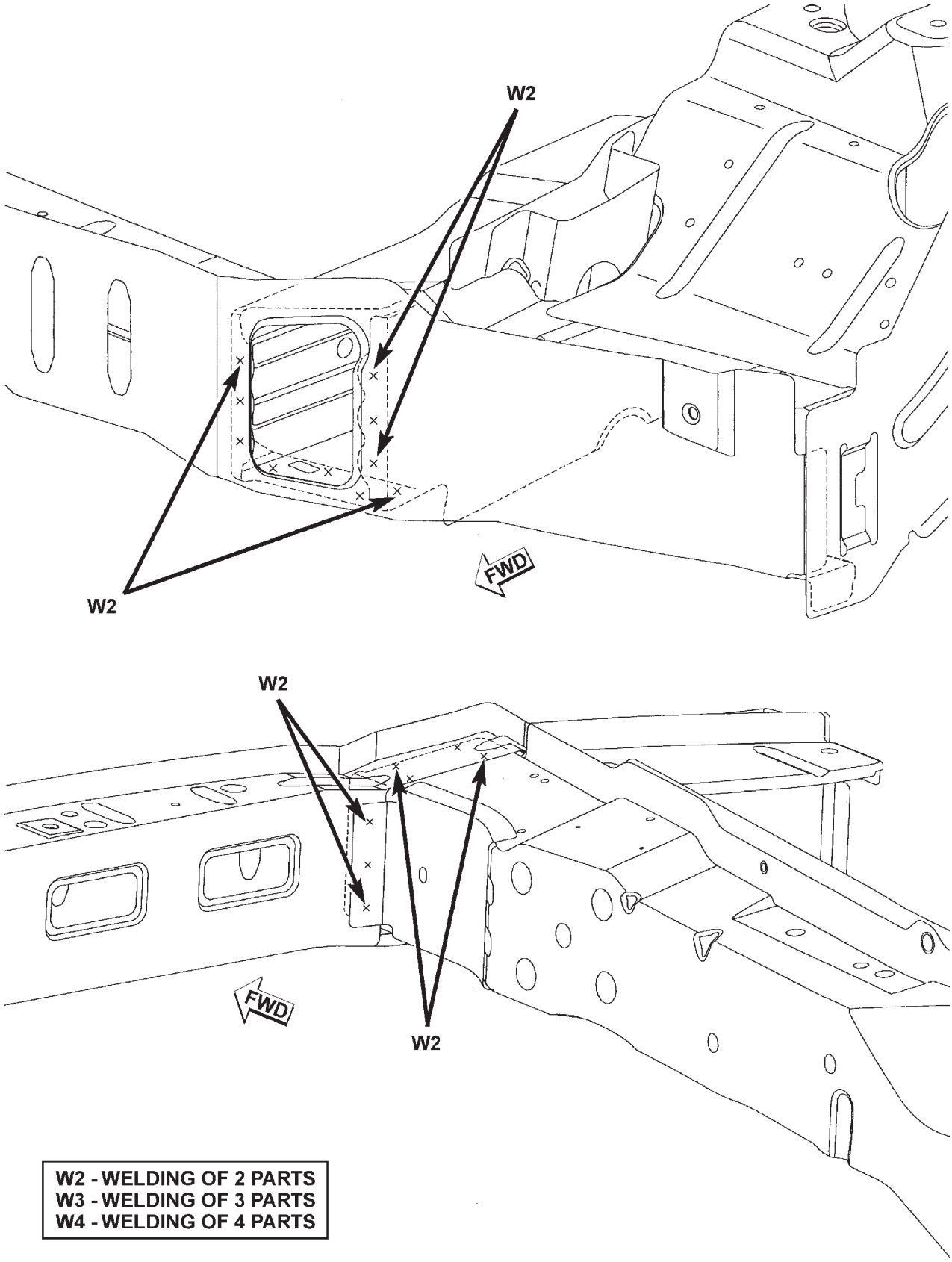

80b6fe8d

SPECIFICATIONS (Continued)

FRONT FENDER MOUNTING BRACKET AND REINFORCEMENT

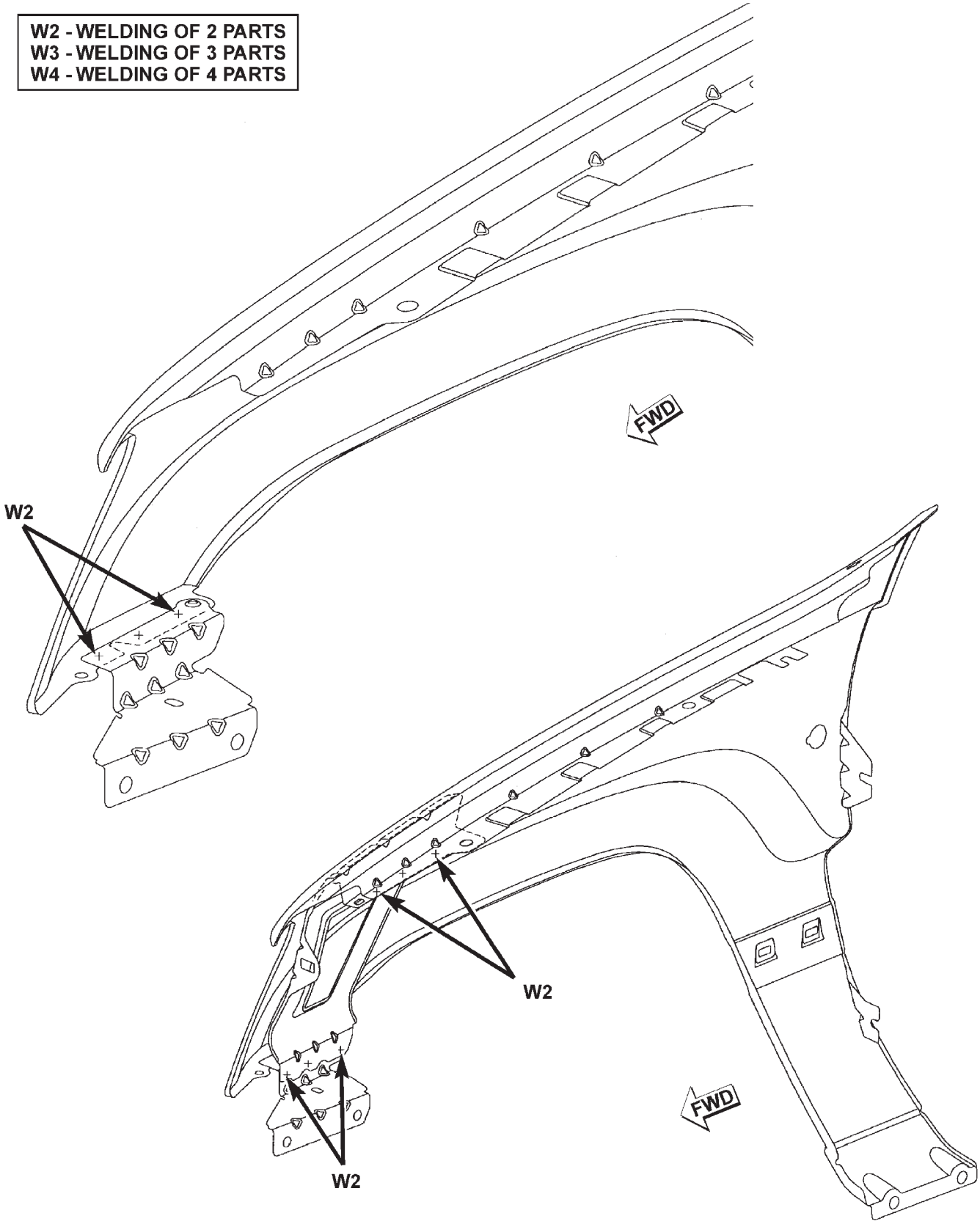

80b6fe8e

SPECIFICATIONS (Continued)

FRONT SUSPENSION SUPPORT TO SILLS AND COWL SIDE PANEL

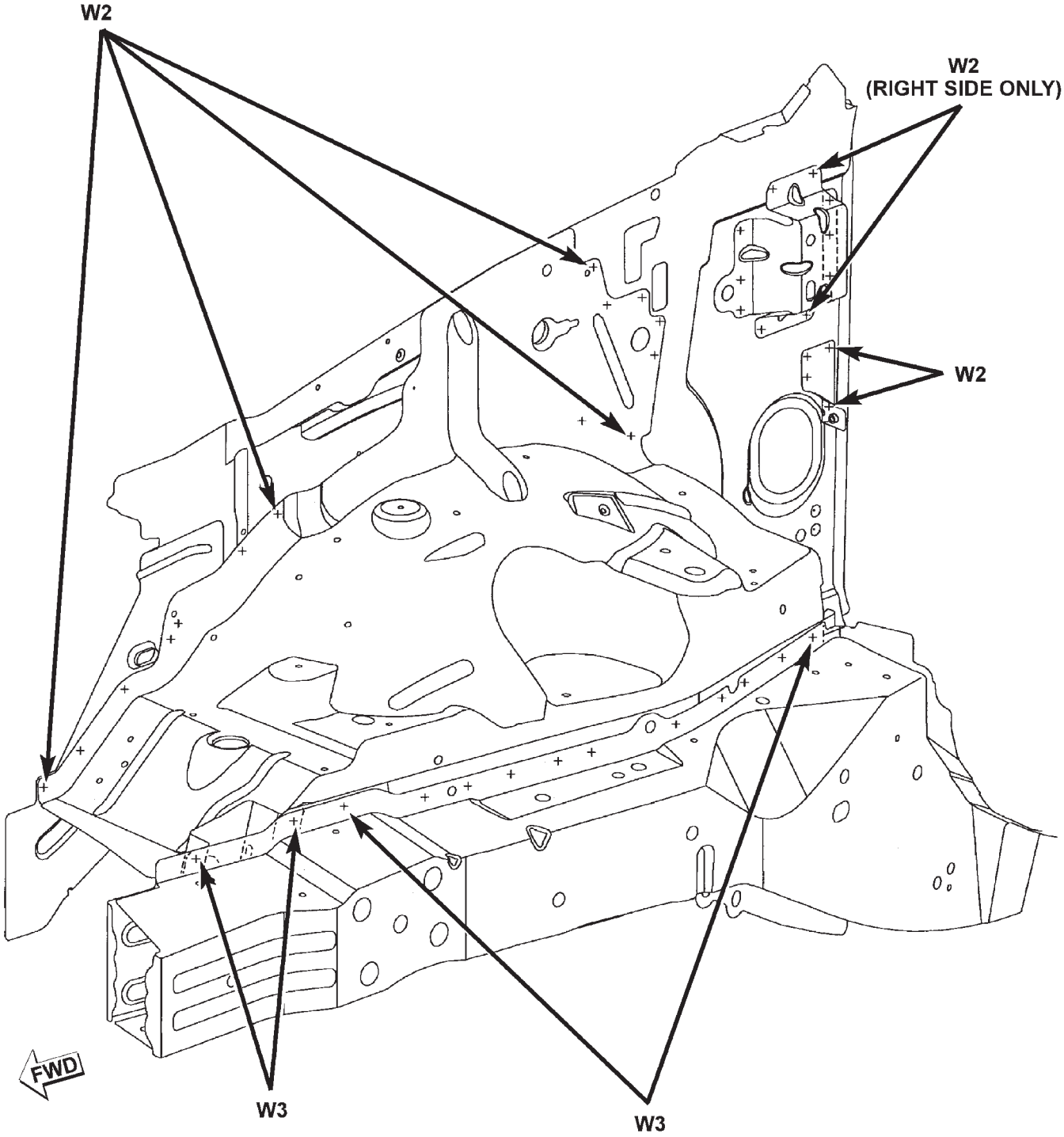

W2 - WELDING OF 2 PARTS
W3 - WELDING OF 3 PARTS
W4 - WELDING OF 4 PARTS

80b6fe59

SPECIFICATIONS (Continued)

LEFT INSTRUMENT PANEL BRACKET TO COWL SIDE PANEL

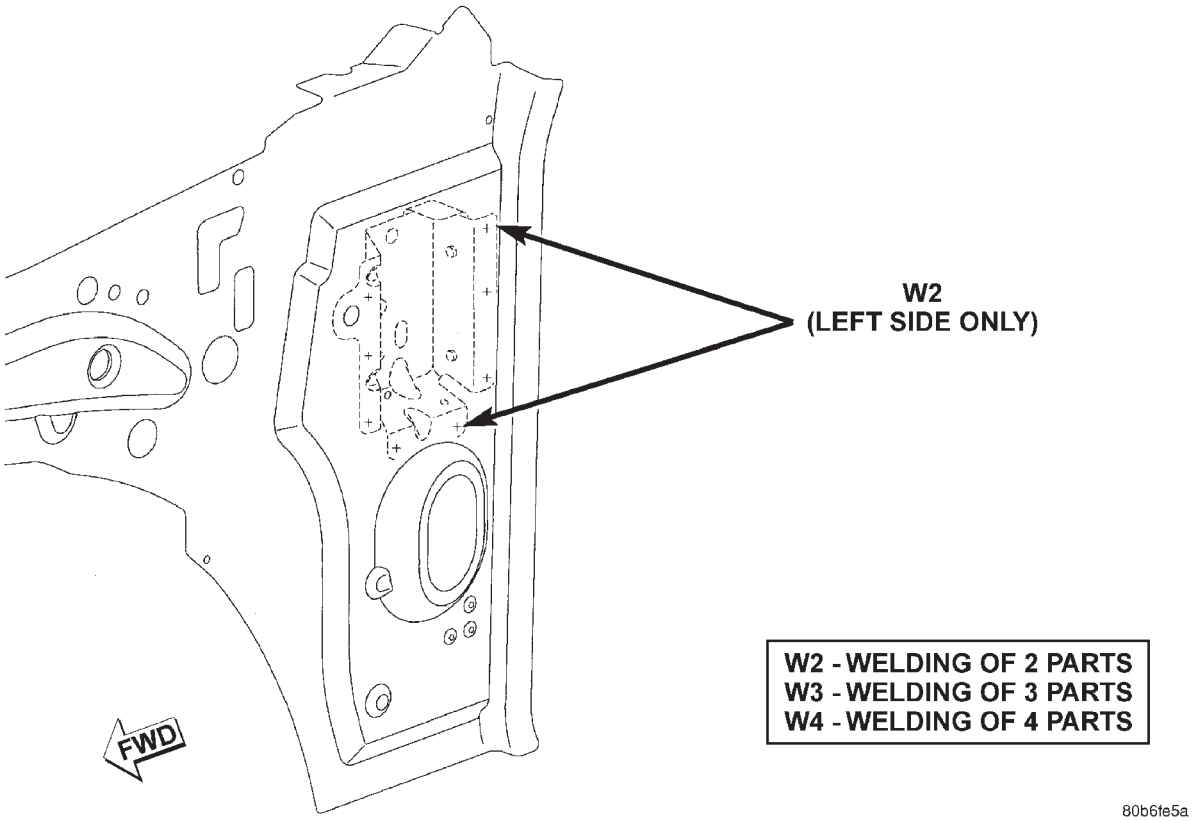

SPECIFICATIONS (Continued)

COWL SIDE UPPER REINFORCEMENT TO COWL SIDE AND FRONT SUSPENSION SUPPORT

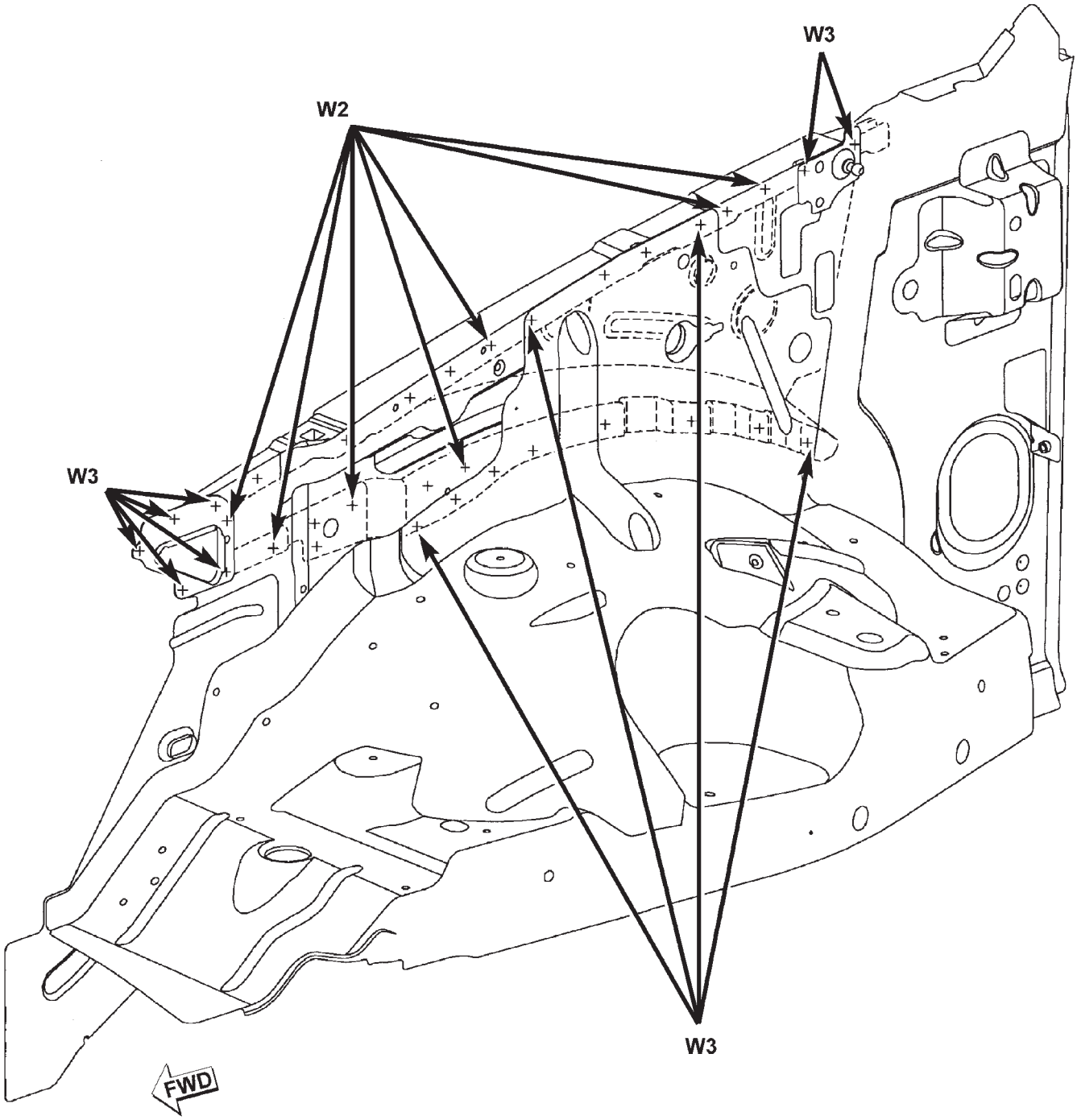

W2 - WELDING OF 2 PARTS
W3 - WELDING OF 3 PARTS
W4 - WELDING OF 4 PARTS

80b6fe5b

SPECIFICATIONS (Continued)

COWL SIDE PANEL TO DASH PANEL AND INNER BODYSIDE PANEL AND SILL

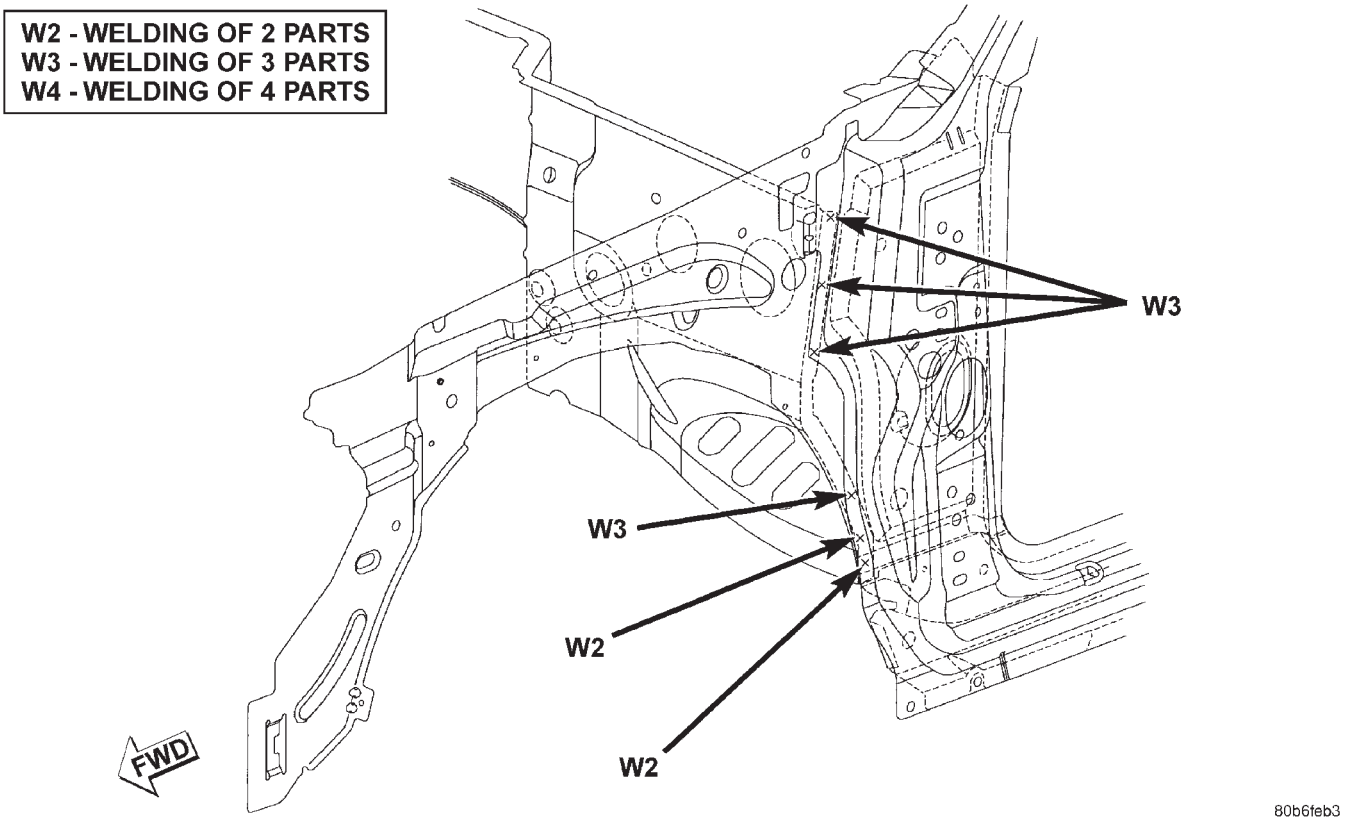

PLENUM ASSEMBLY TO COWL SIDE PANEL

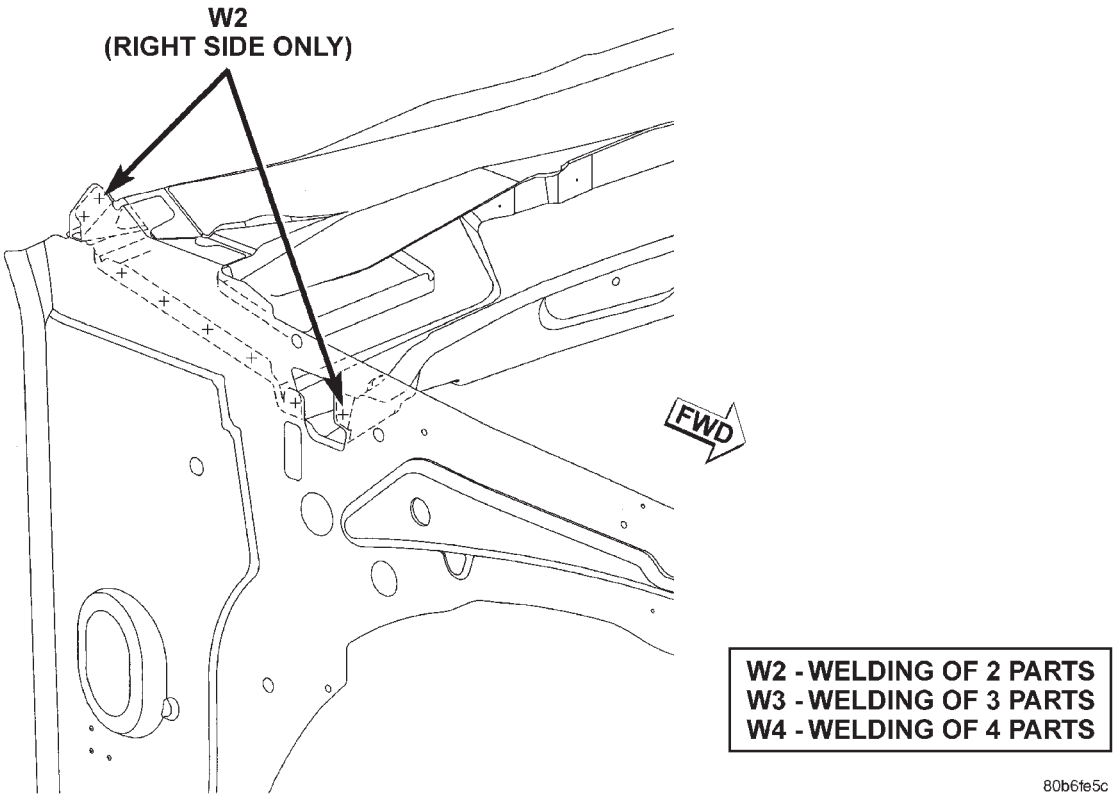

SPECIFICATIONS (Continued)

FRONT LOWER CROSSMEMBER

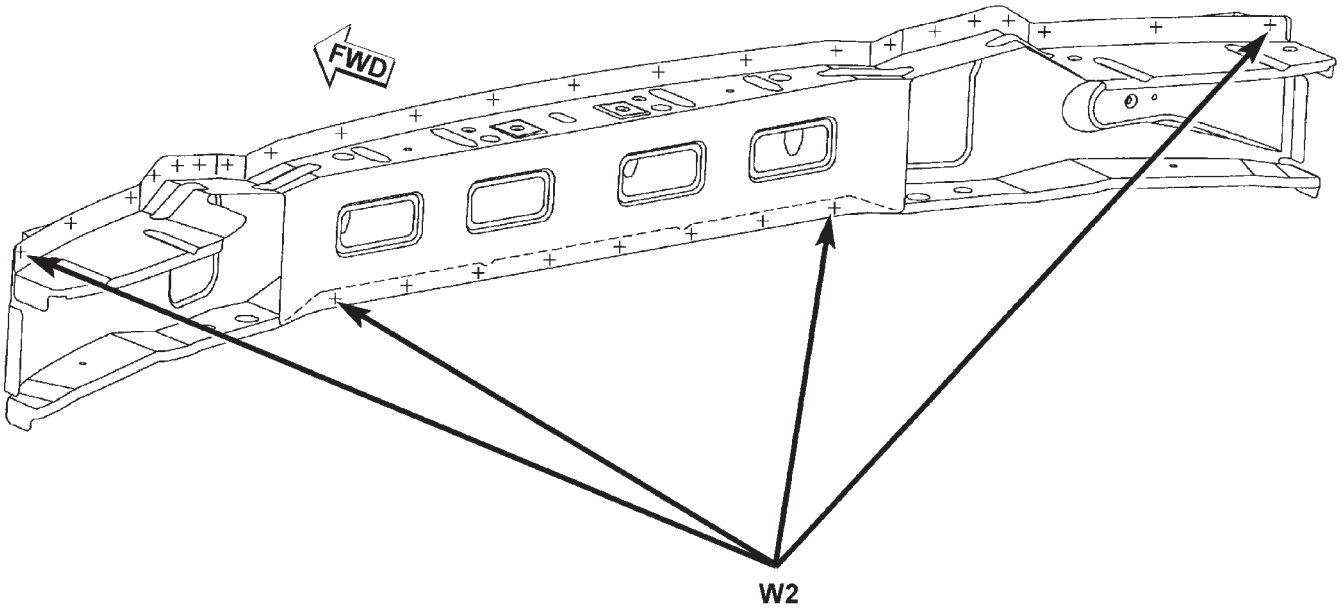

W2 - WELDING OF 2 PARTS
W3 - WELDING OF 3 PARTS
W4 - WELDING OF 4 PARTS

80b6fe7e

SPECIFICATIONS (Continued)

FRONT SUSPENSION SUPPORT TO DASH

W2 - WELDING OF 2 PARTS
W3 - WELDING OF 3 PARTS
W4 - WELDING OF 4 PARTS

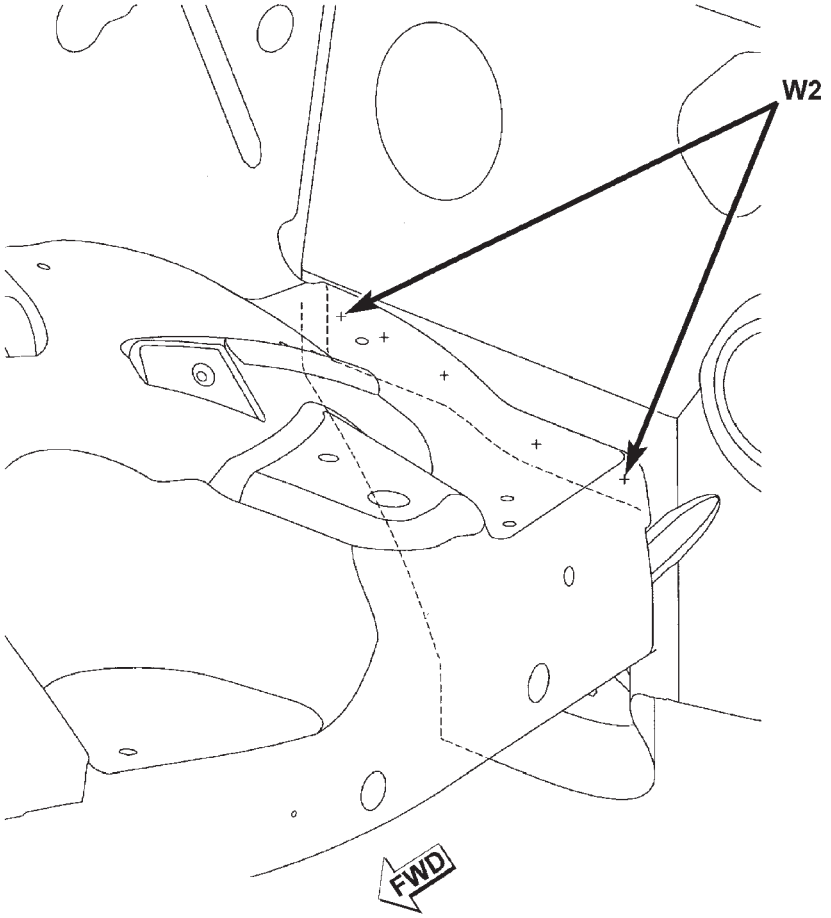

RIGHT SIDE ONLY

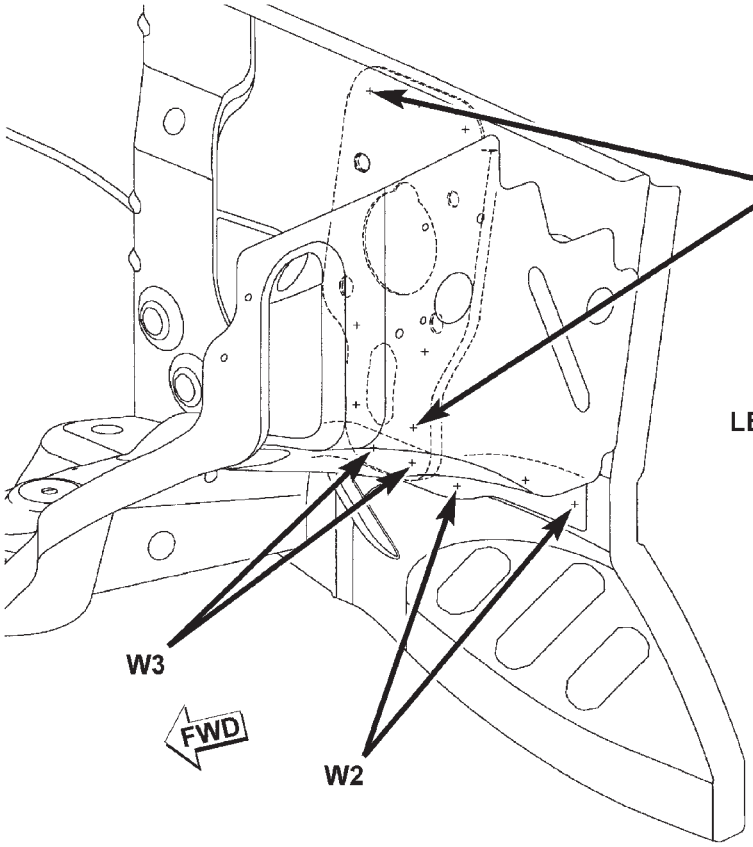

LEFT SIDE ONLY

80b6fe3b

SPECIFICATIONS (Continued)

WIPER MOUNTING BRACKETS TO PLENUM ASSEMBLY

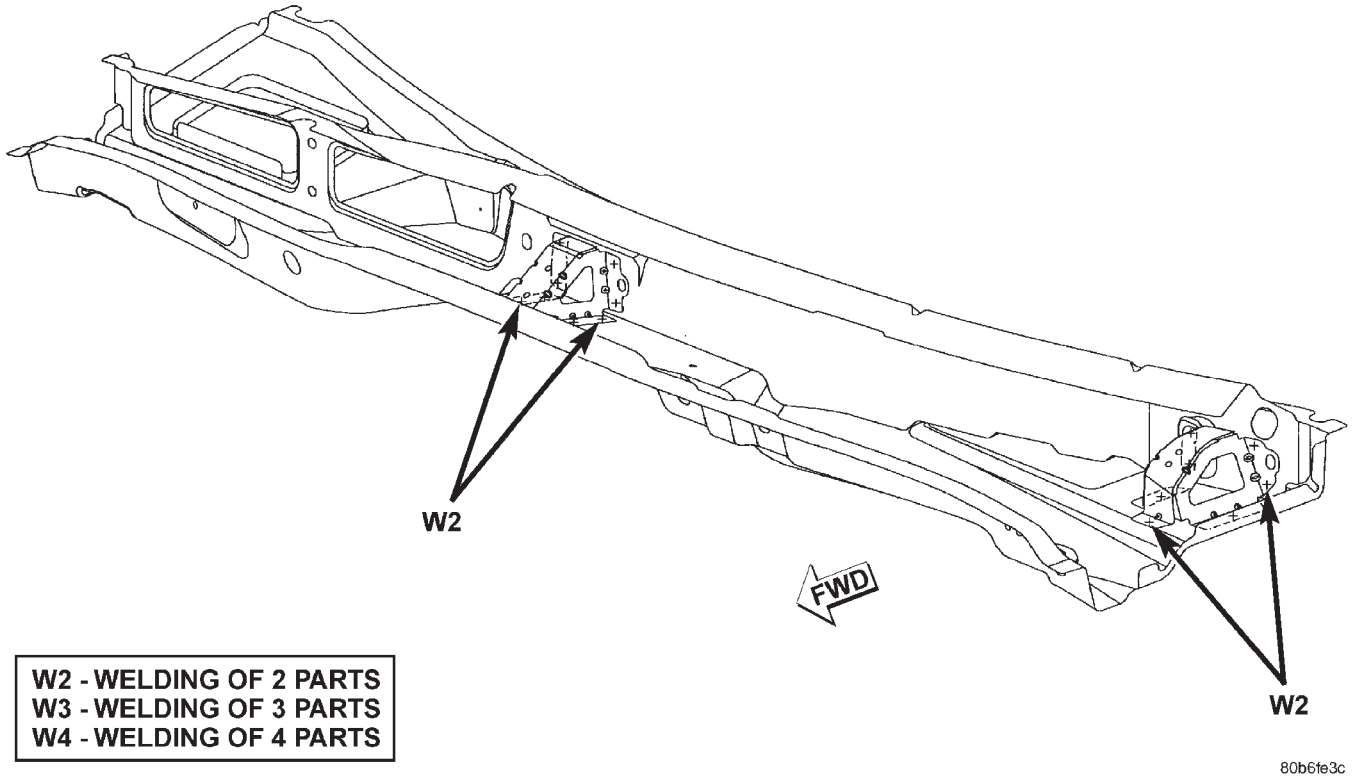

COWL TOP AND PLENUM ASSEMBLY

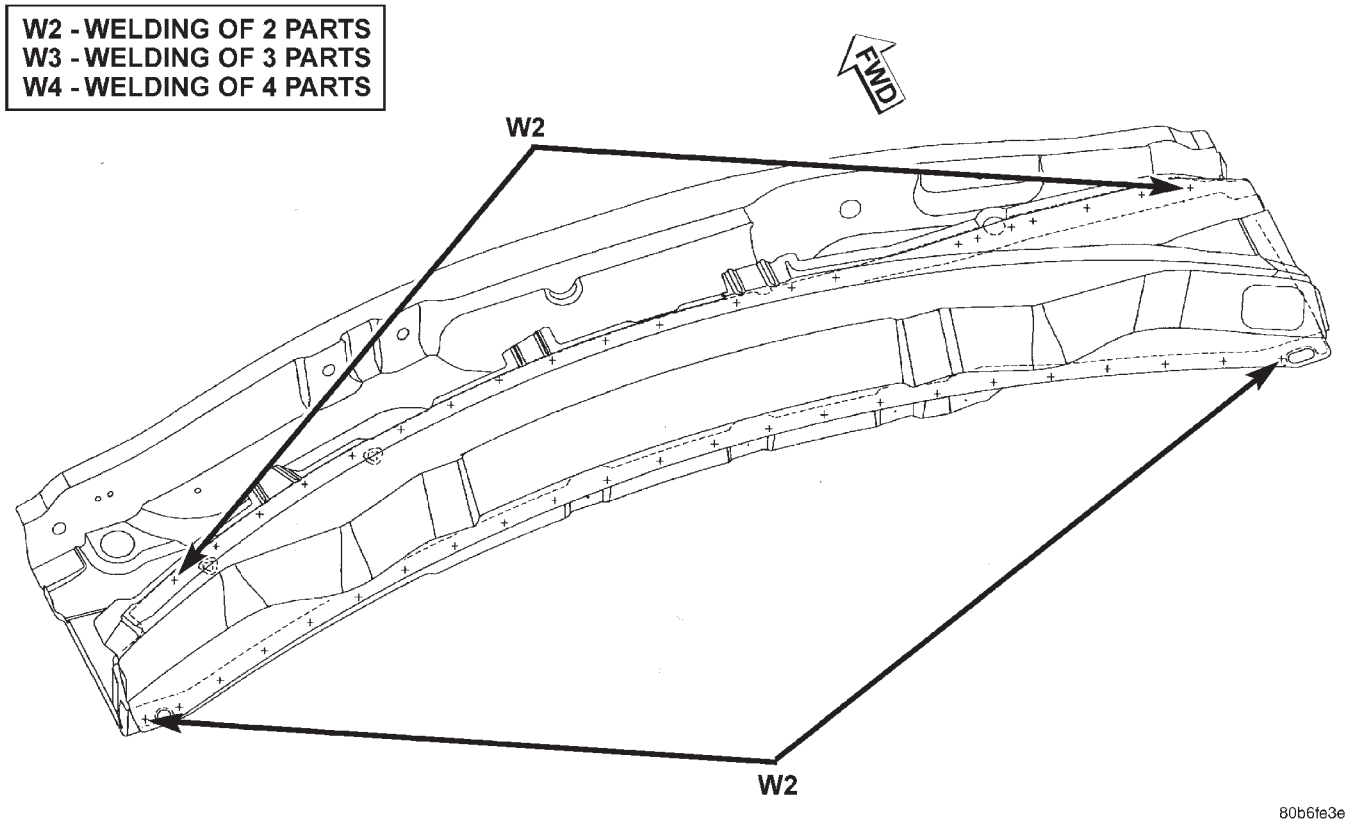

SPECIFICATIONS (Continued)

LOWER PLENUM REINFORCEMENT TO LOWER PLENUM PANEL

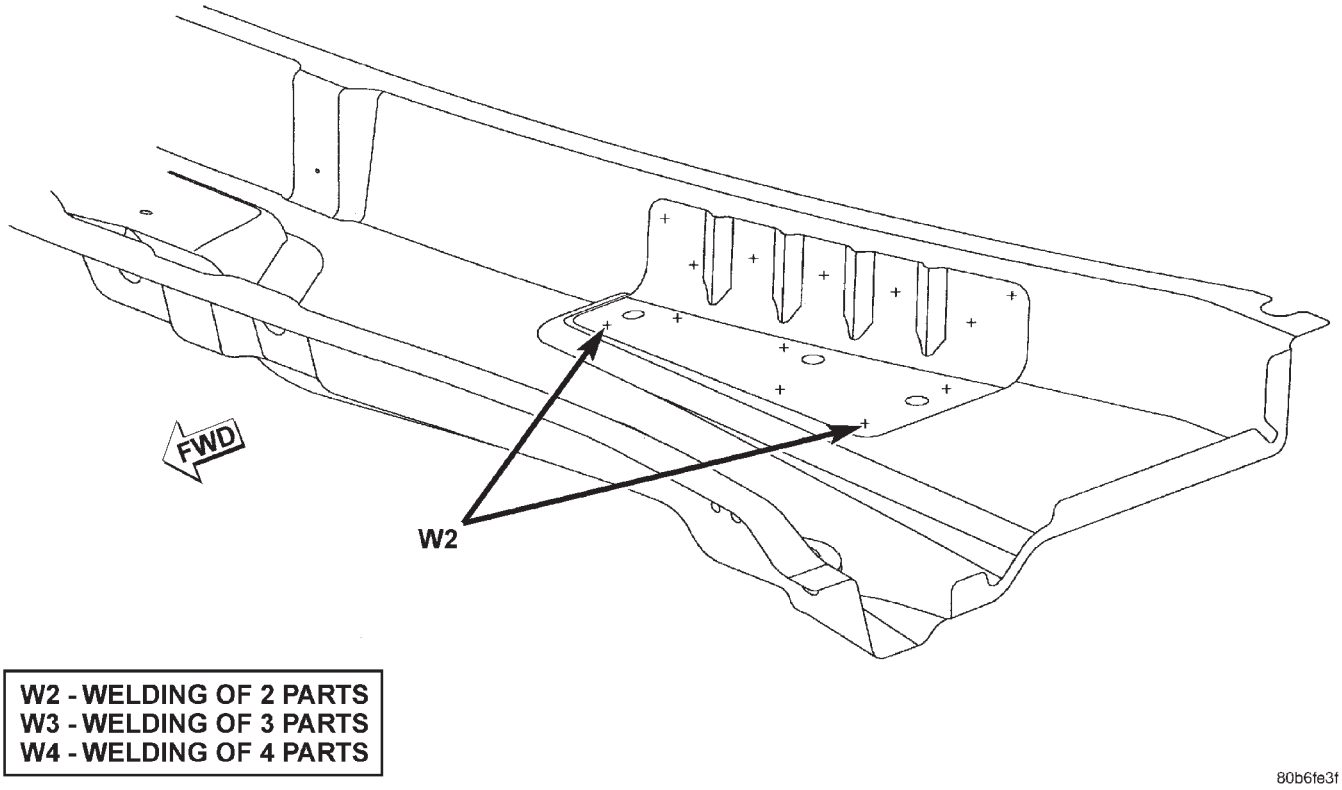

DASH PANEL TO LOWER PLENUM PANEL

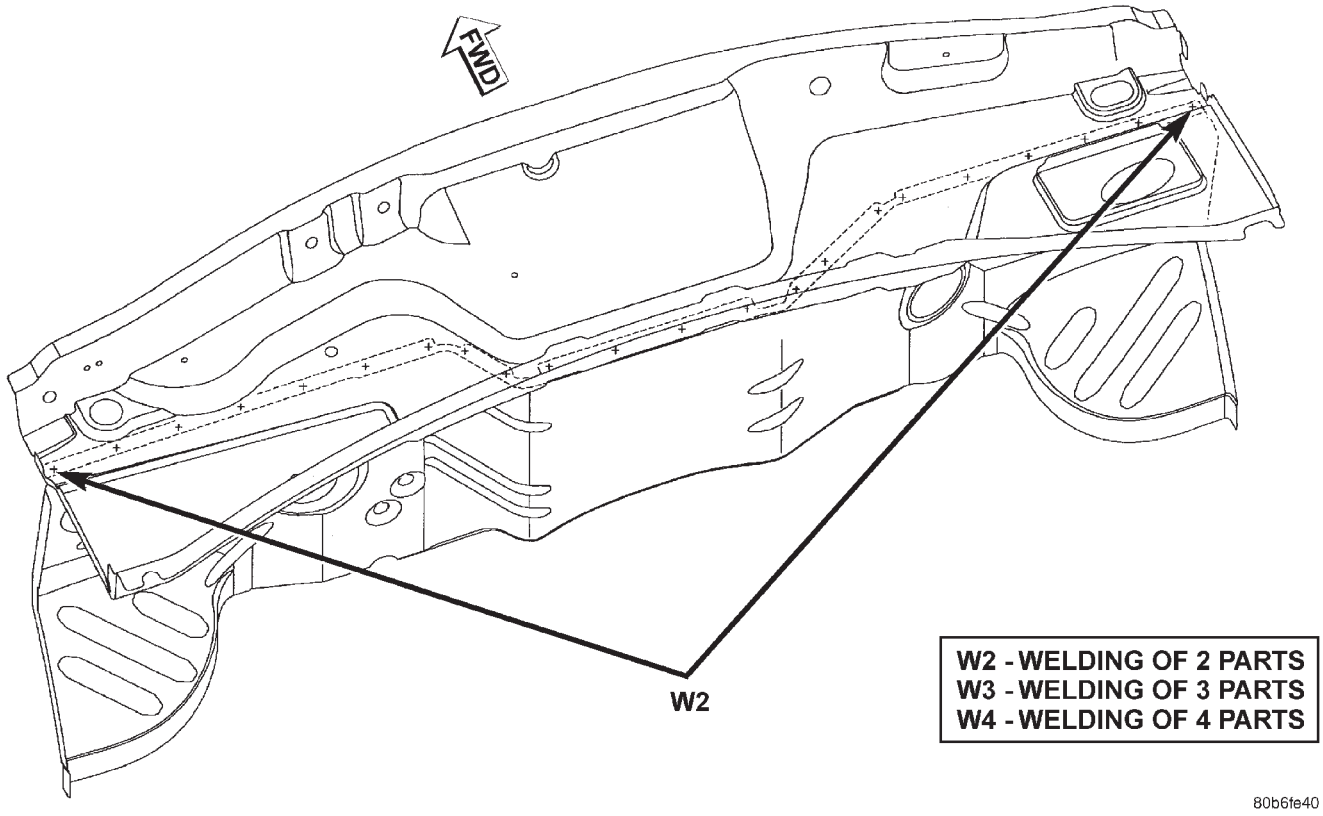

SPECIFICATIONS (Continued)

PLENUM ASSEMBLY TO COWL

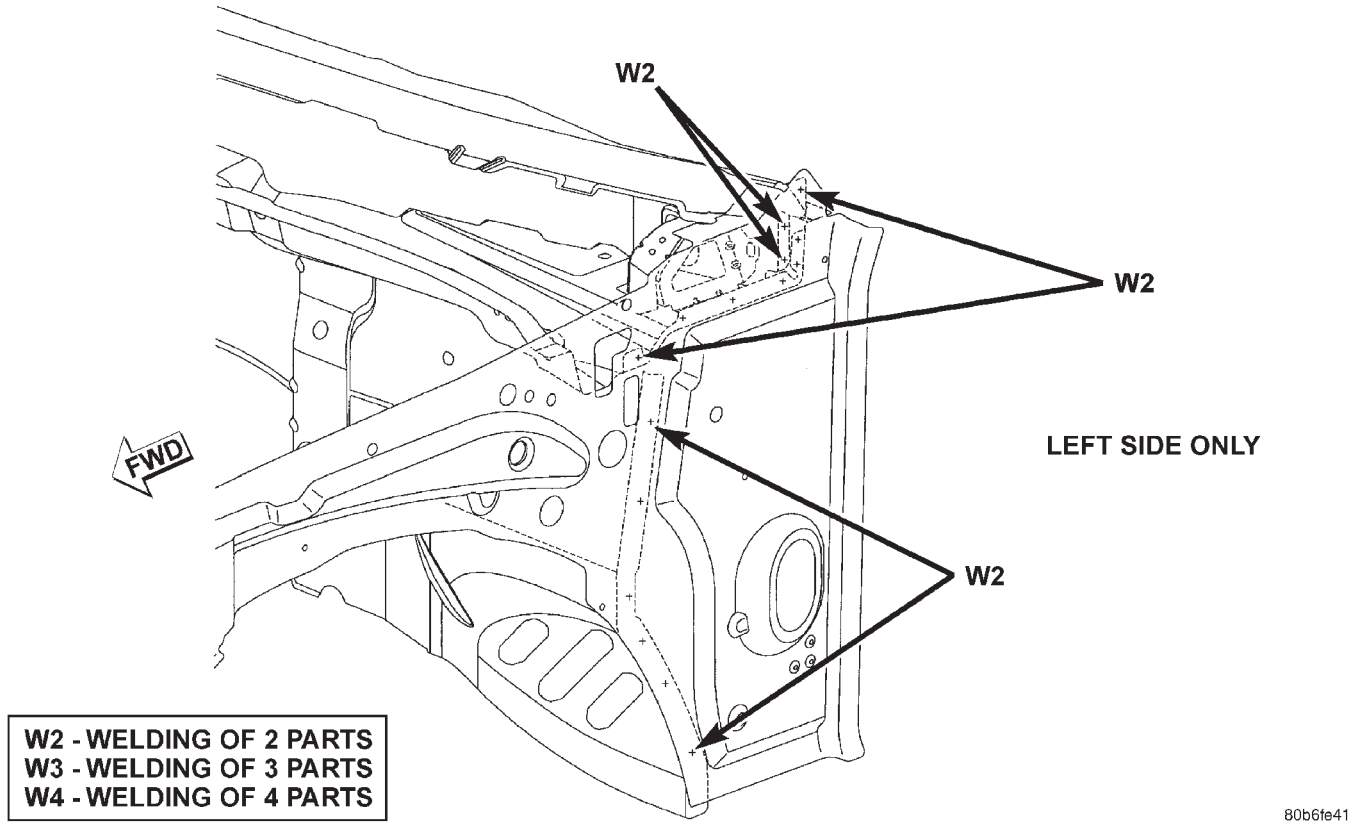

COWL PANEL TO BODYSIDE SILL

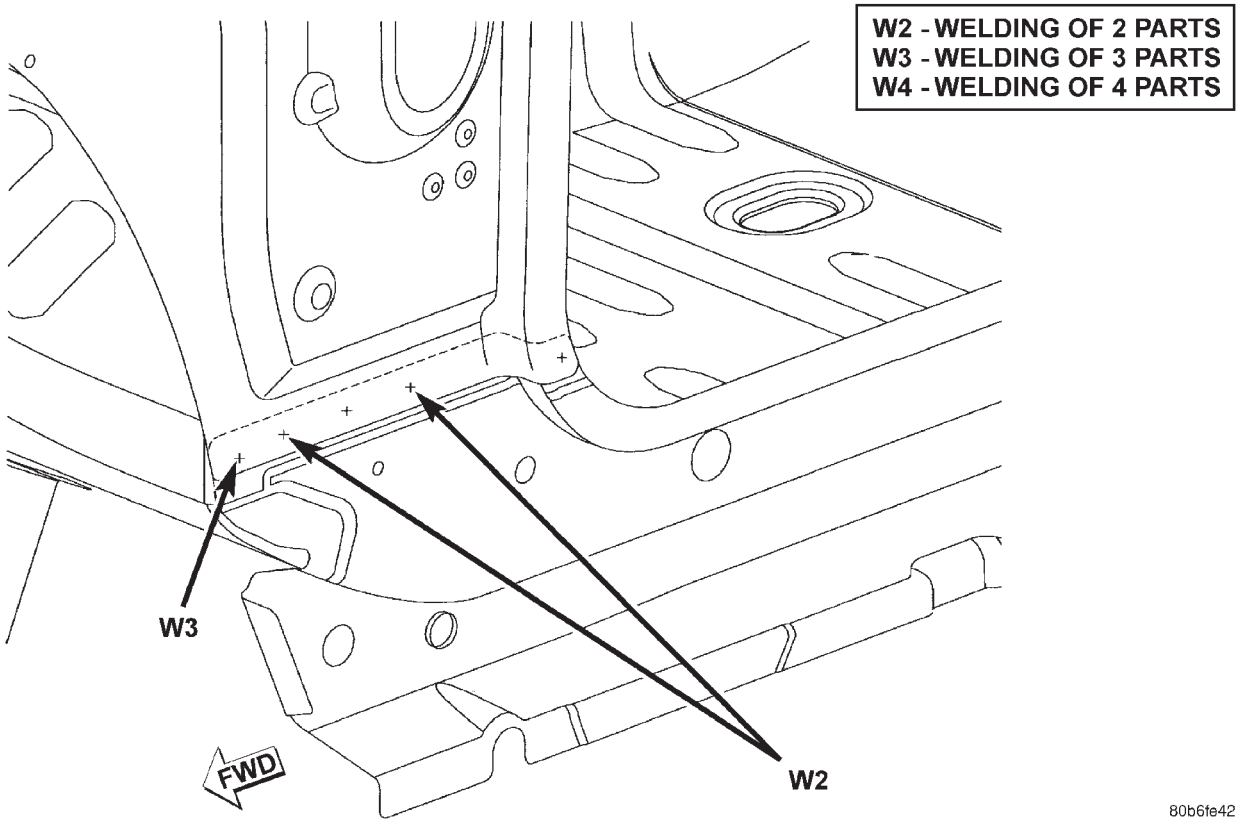

SPECIFICATIONS (Continued)

COWL PANEL TO FRONT FLOOR PAN

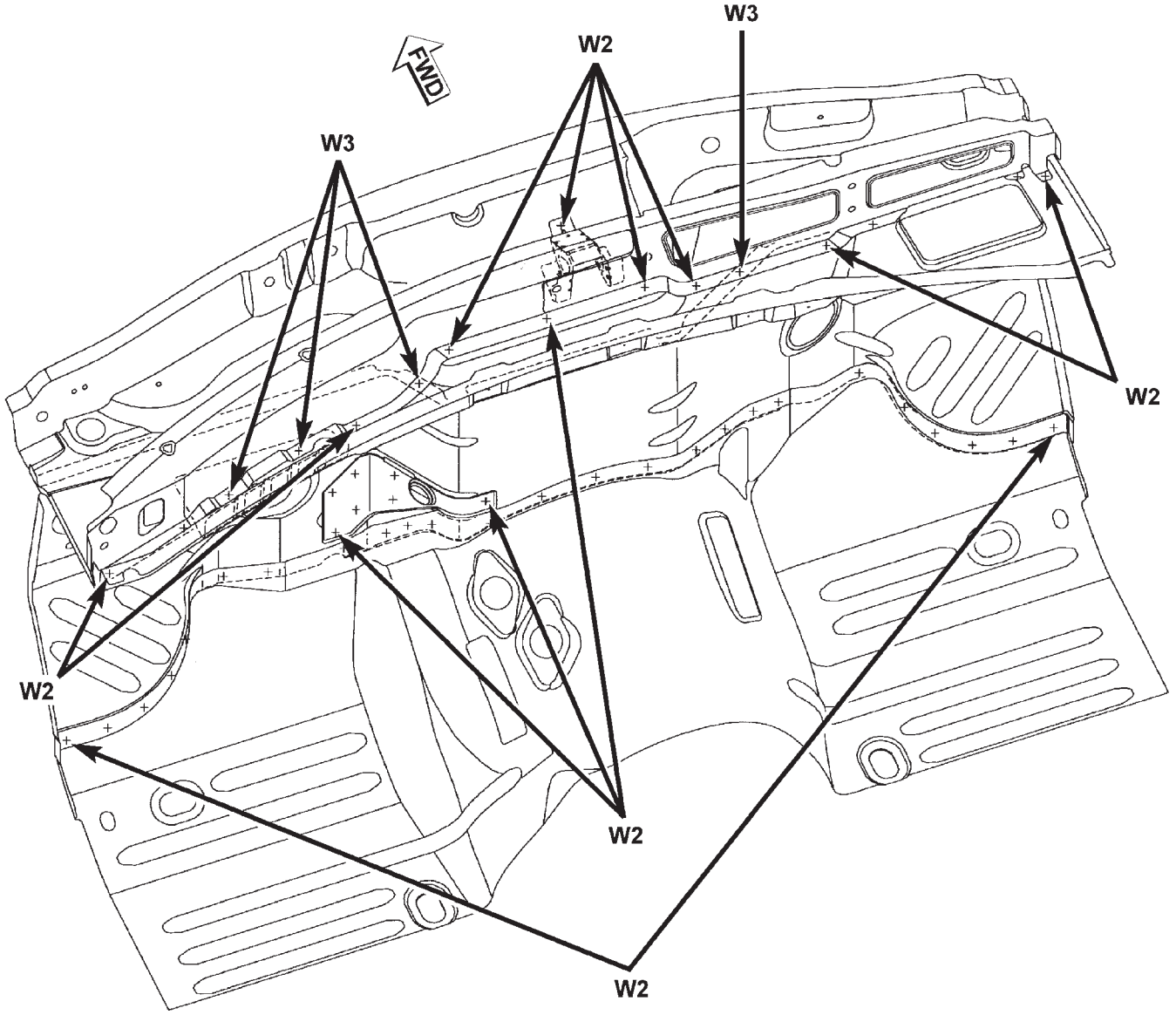

W2 - WELDING OF 2 PARTS
W3 - WELDING OF 3 PARTS
W4 - WELDING OF 4 PARTS

80b6fe47

SPECIFICATIONS (Continued)

FRONT SILLS TO DASH AND FRONT FLOOR PAN

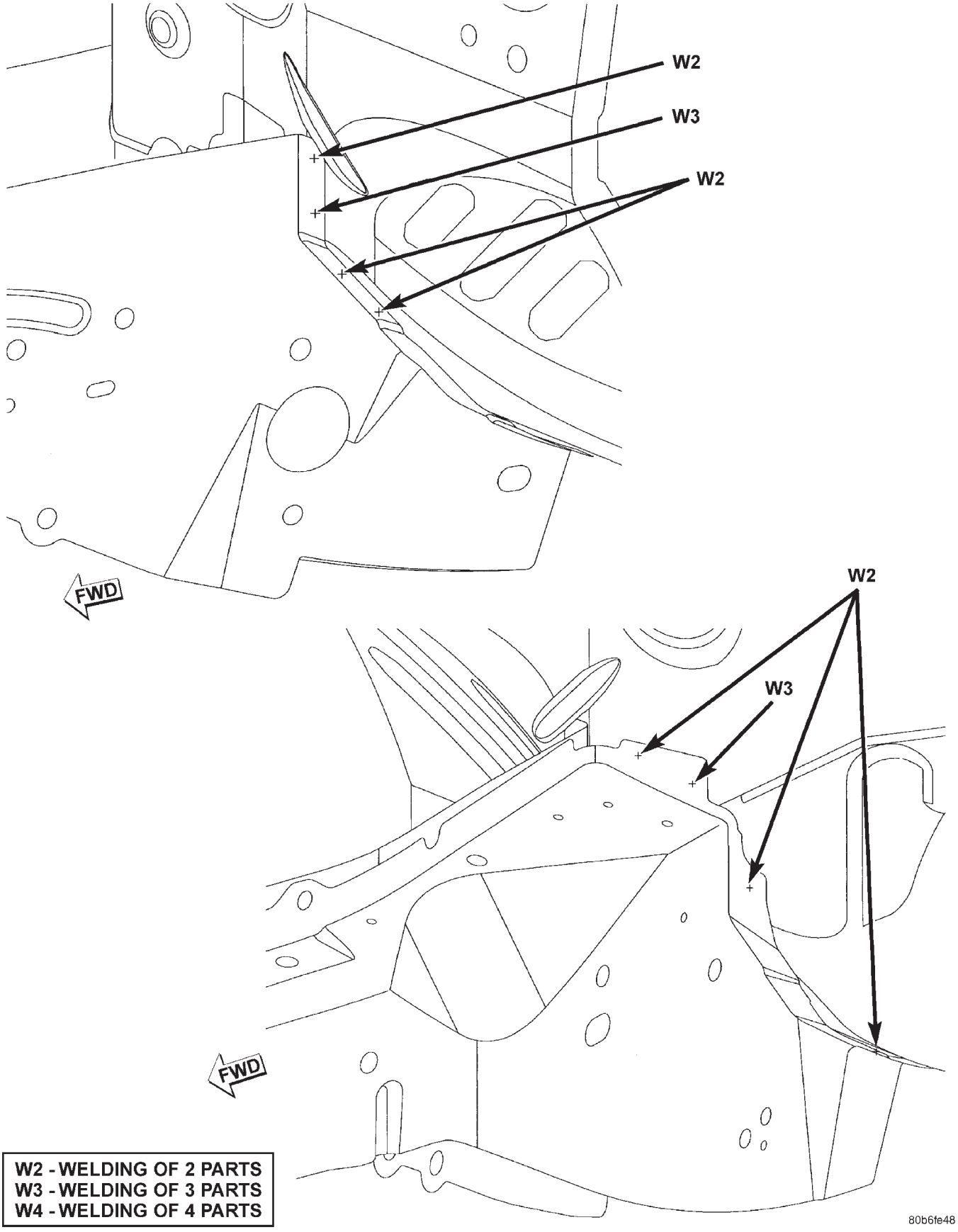

SPECIFICATIONS (Continued)

COWL SIDE PANEL DASH INNER BODYSIDE AND OUTER BODYSIDE PANELS

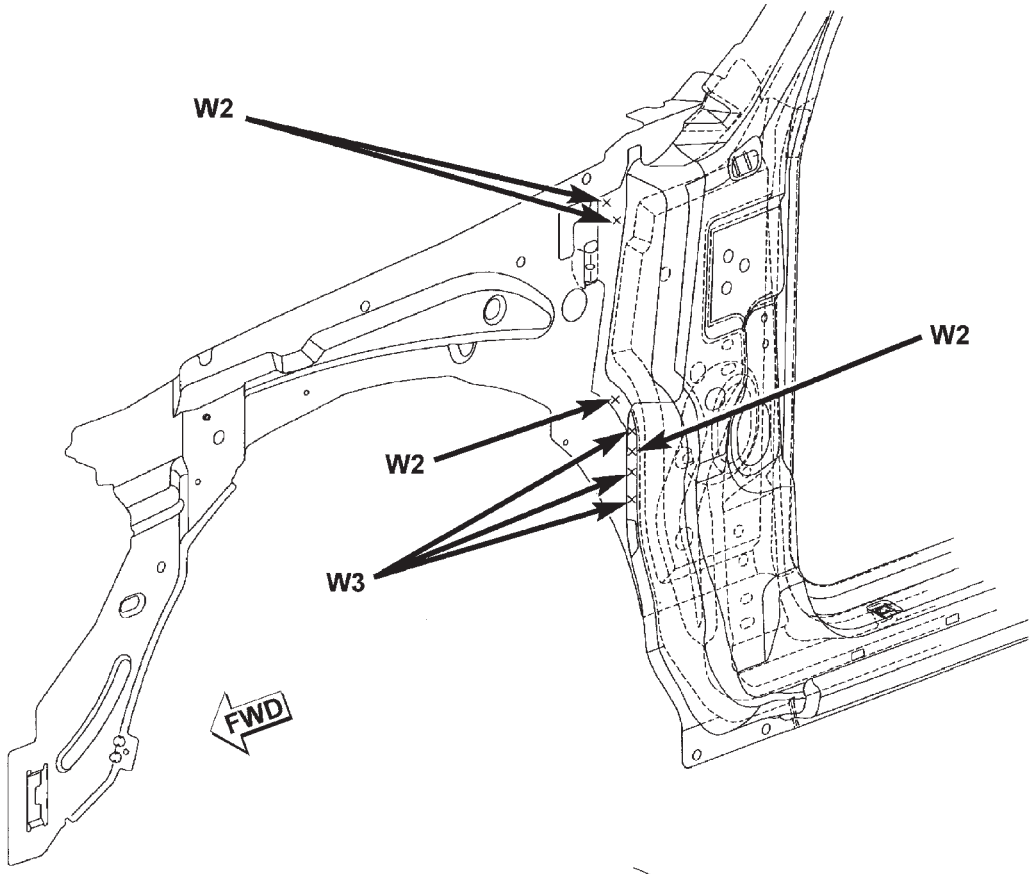

W2 - WELDING OF 2 PARTS
W3 - WELDING OF 3 PARTS
W4 - WELDING OF 4 PARTS

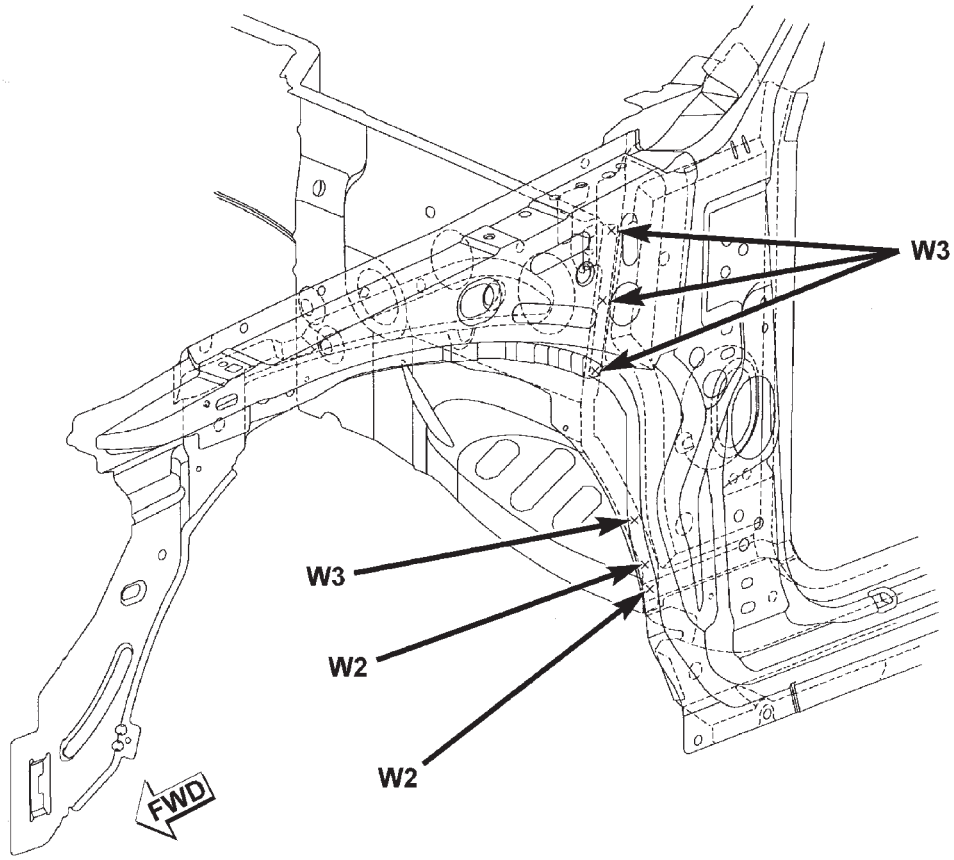

80b6fe8f

SPECIFICATIONS (Continued)

UPPER FRONT INNER PILLAR TO ROOF AND COWL

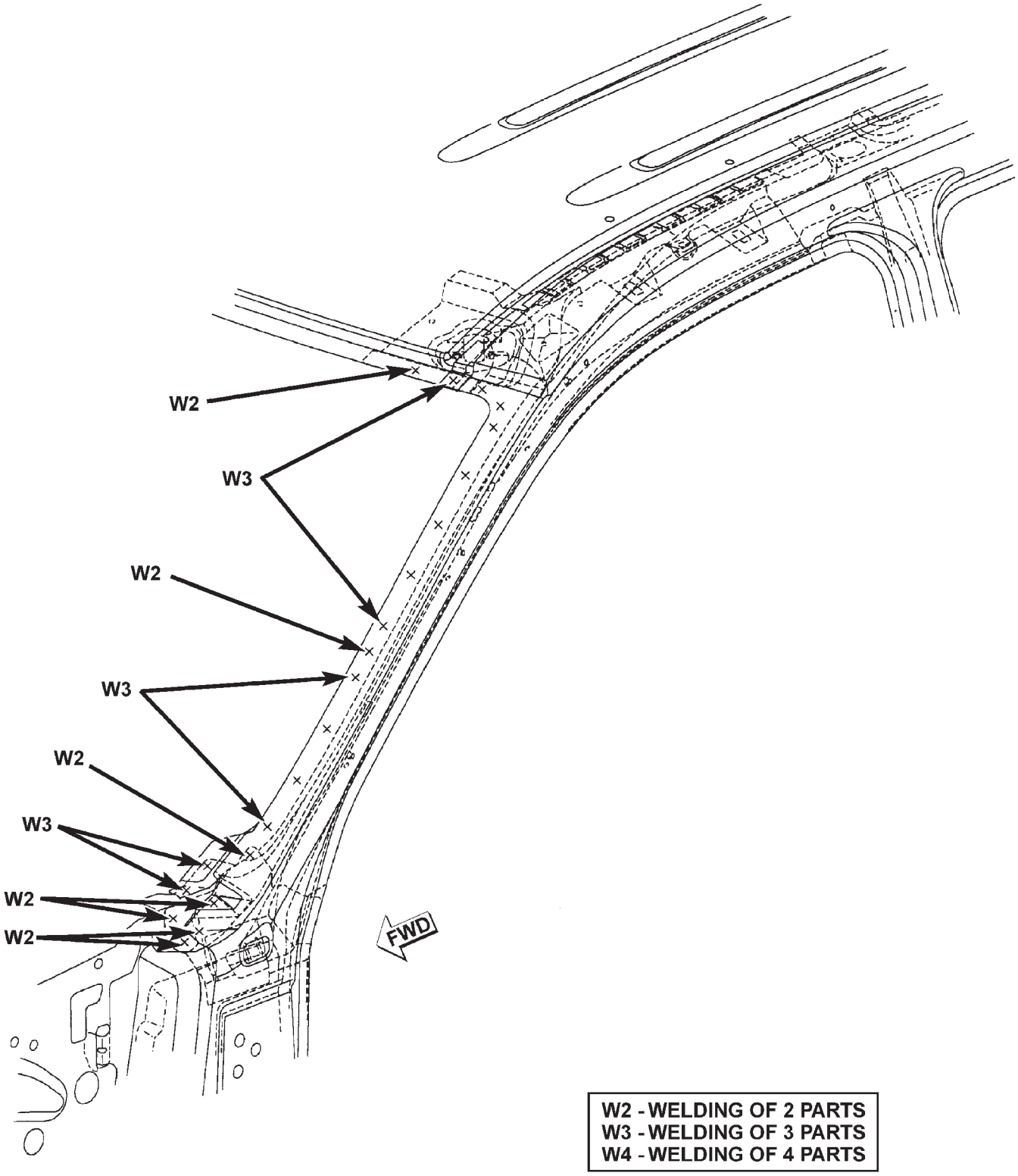

80b6fe90

SPECIFICATIONS (Continued)

DOOR OPENINGS

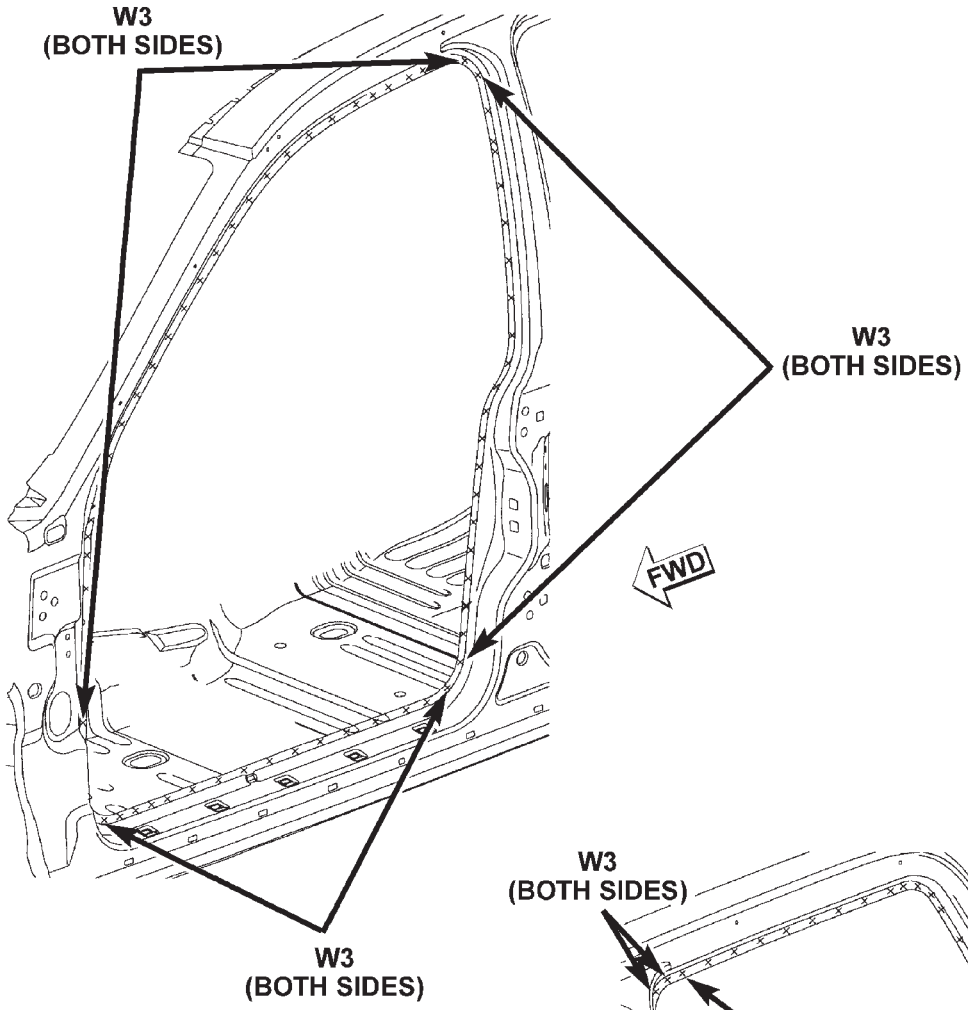

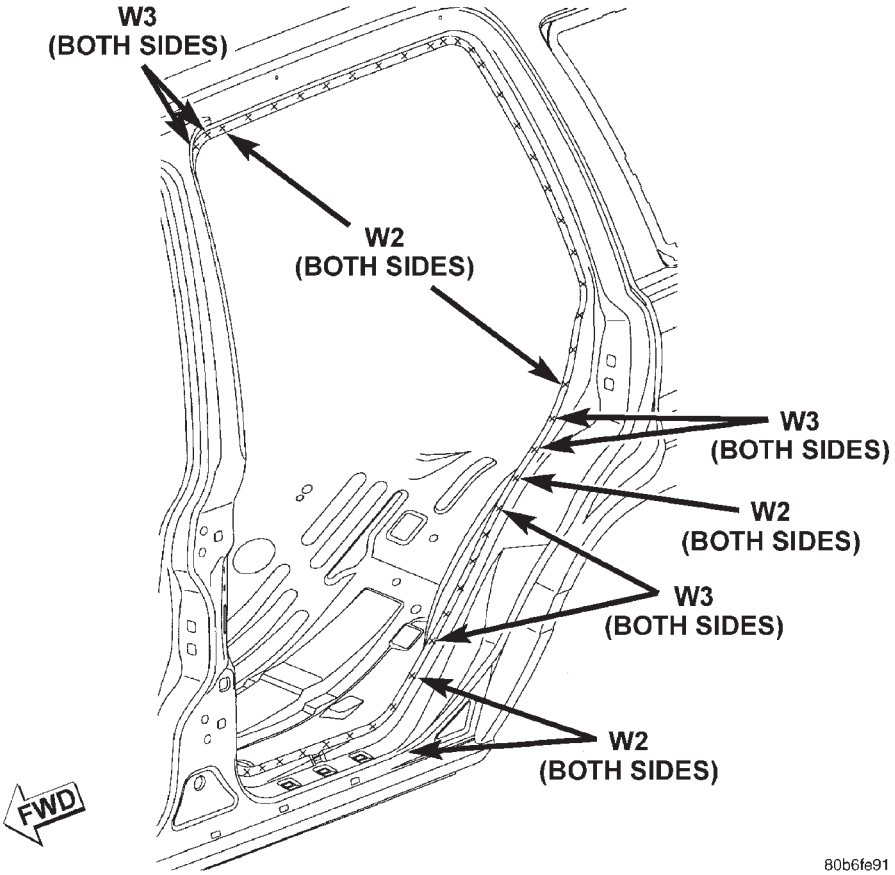

W2 - WELDING OF 2 PARTS
W3 - WELDING OF 3 PARTS
W4 - WELDING OF 4 PARTS

80b6fe91

SPECIFICATIONS (Continued)

B-PILLAR REINFORCEMENT TO INNER BODYSIDE APERTURE

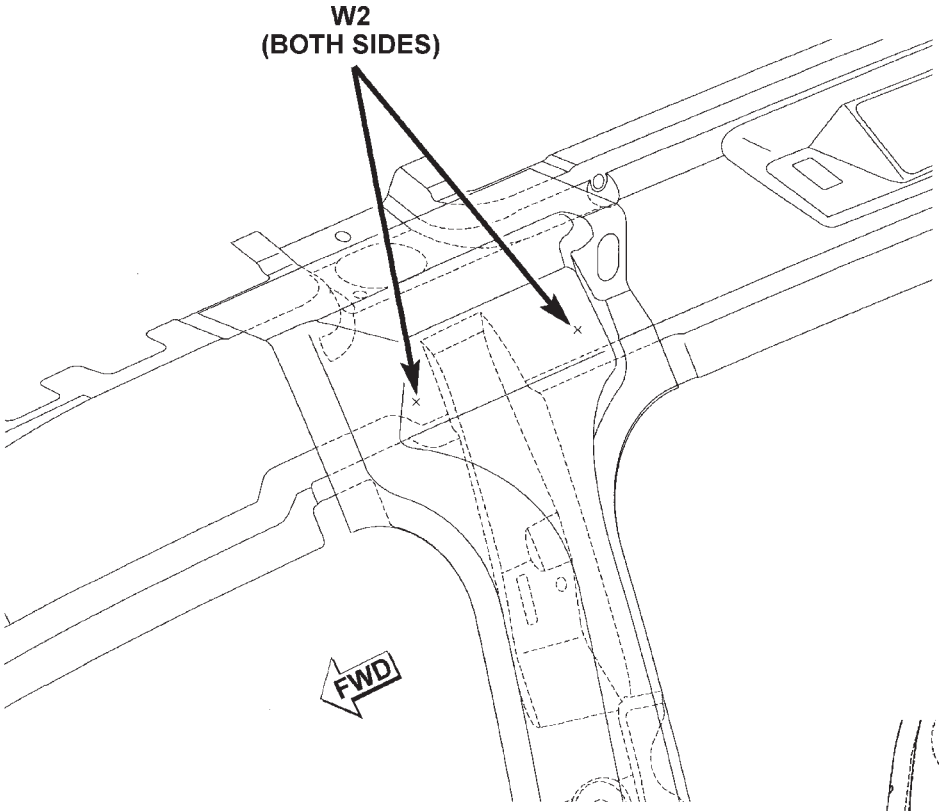

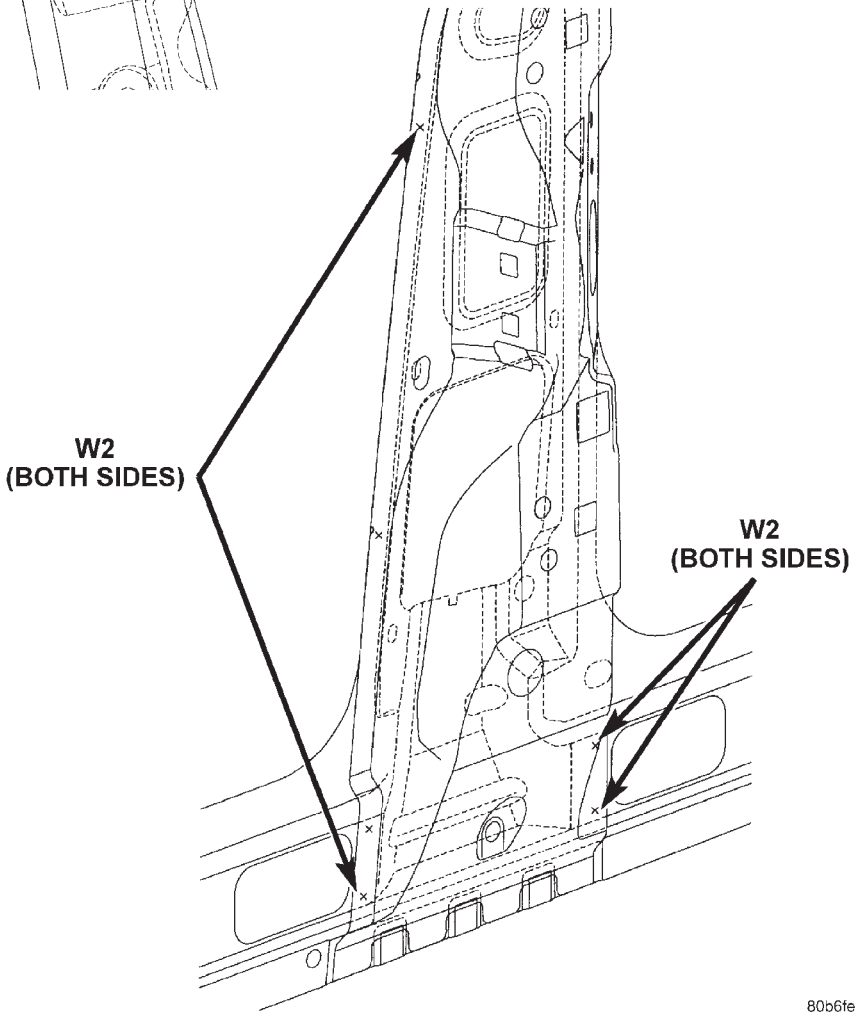

W2 - WELDING OF 2 PARTS
W3 - WELDING OF 3 PARTS
W4 - WELDING OF 4 PARTS

80b6fe92

SPECIFICATIONS (Continued)

REAR QUARTER WINDOW TO BODYSIDE APERTURE INNER AND OUTER

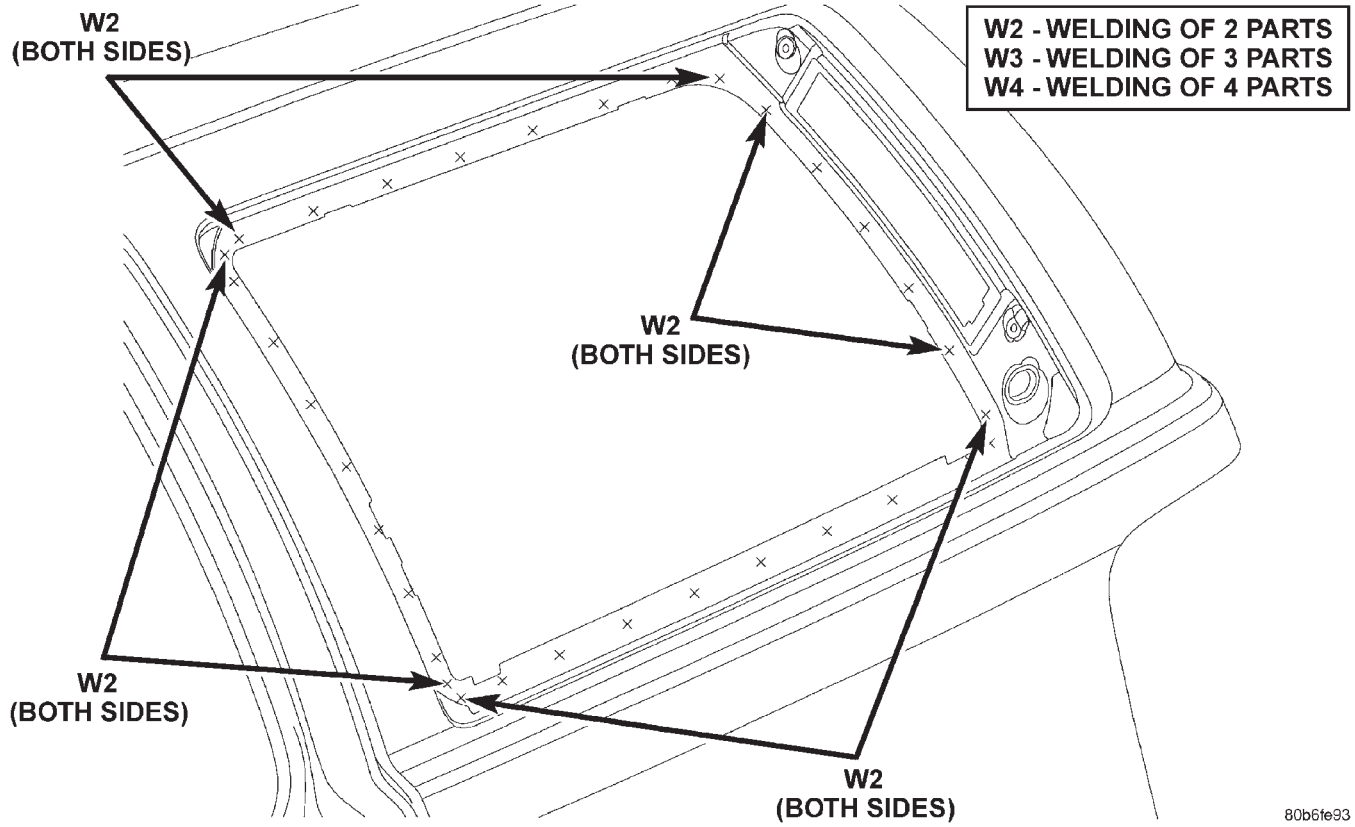

LOWER REAR QUARTER TO BODYSIDE APERTURE INNER AND OUTER

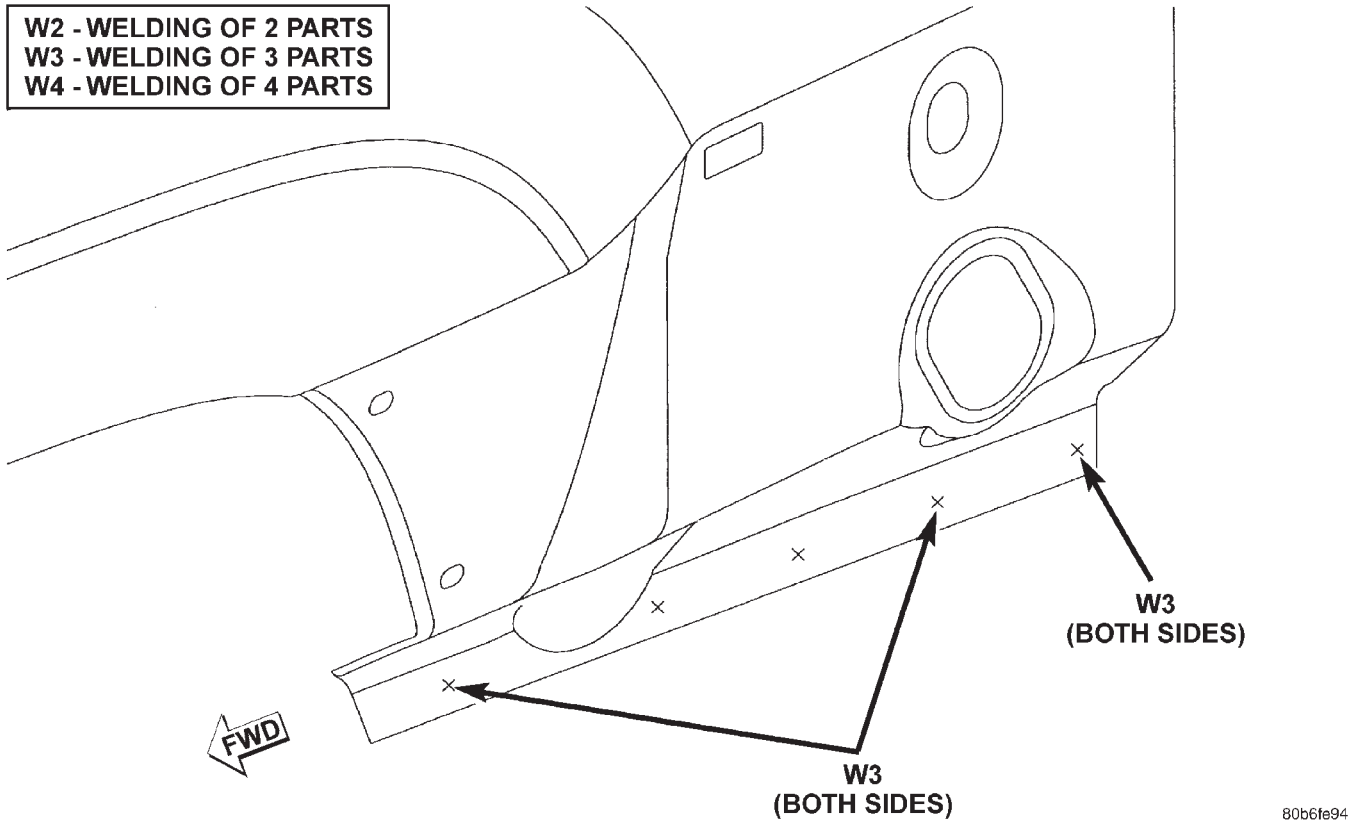

SPECIFICATIONS (Continued)

INNER TRACK BAR, LOWER CONTROL ARM AND TRANSMISSION CROSSMEMBER BRACKETSTO FRONT SILLS

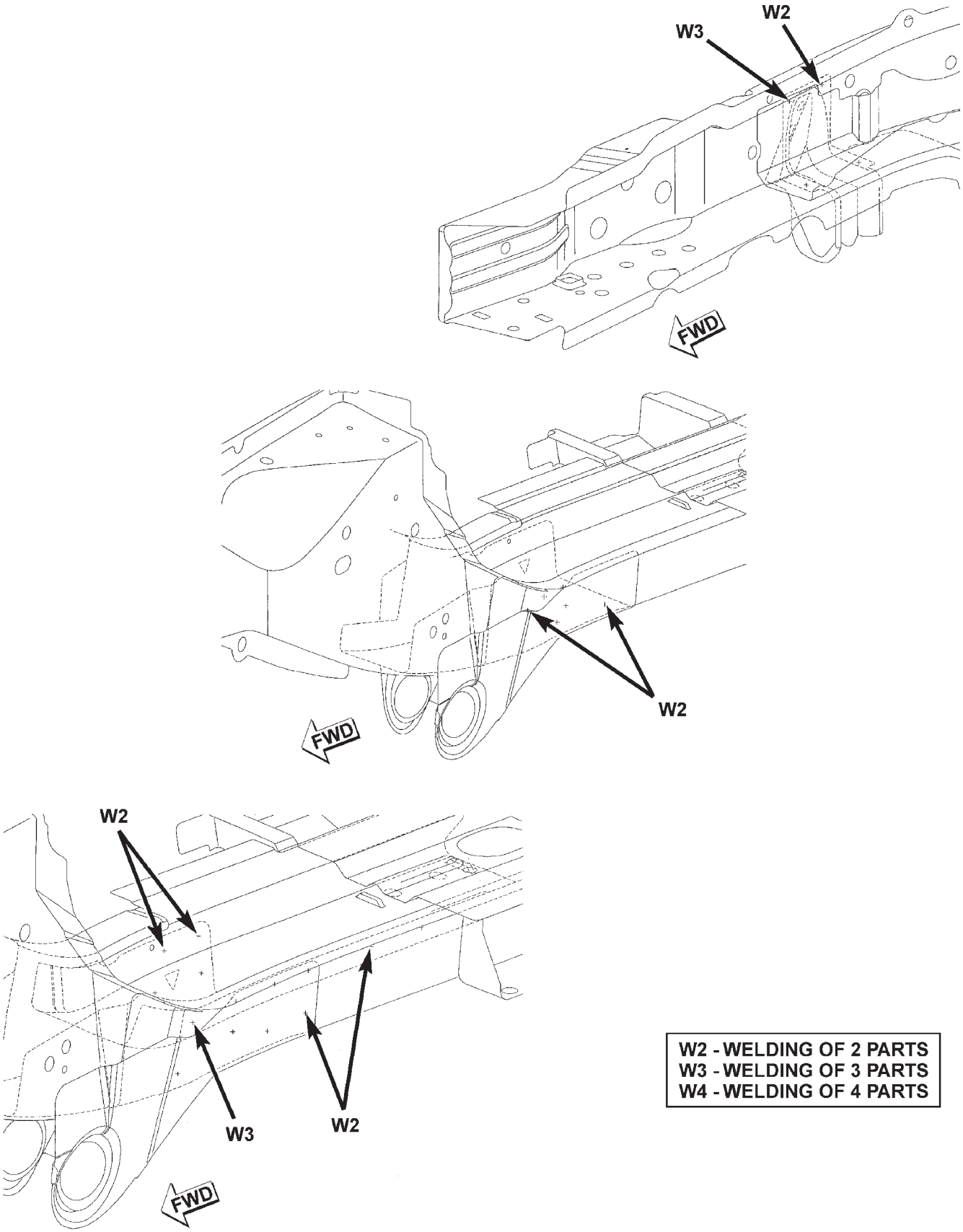

SPECIFICATIONS (Continued)

TRANSMISSION CROSSMEMBER BRACKET AND REINFORCEMENT TO FRONT SILLS

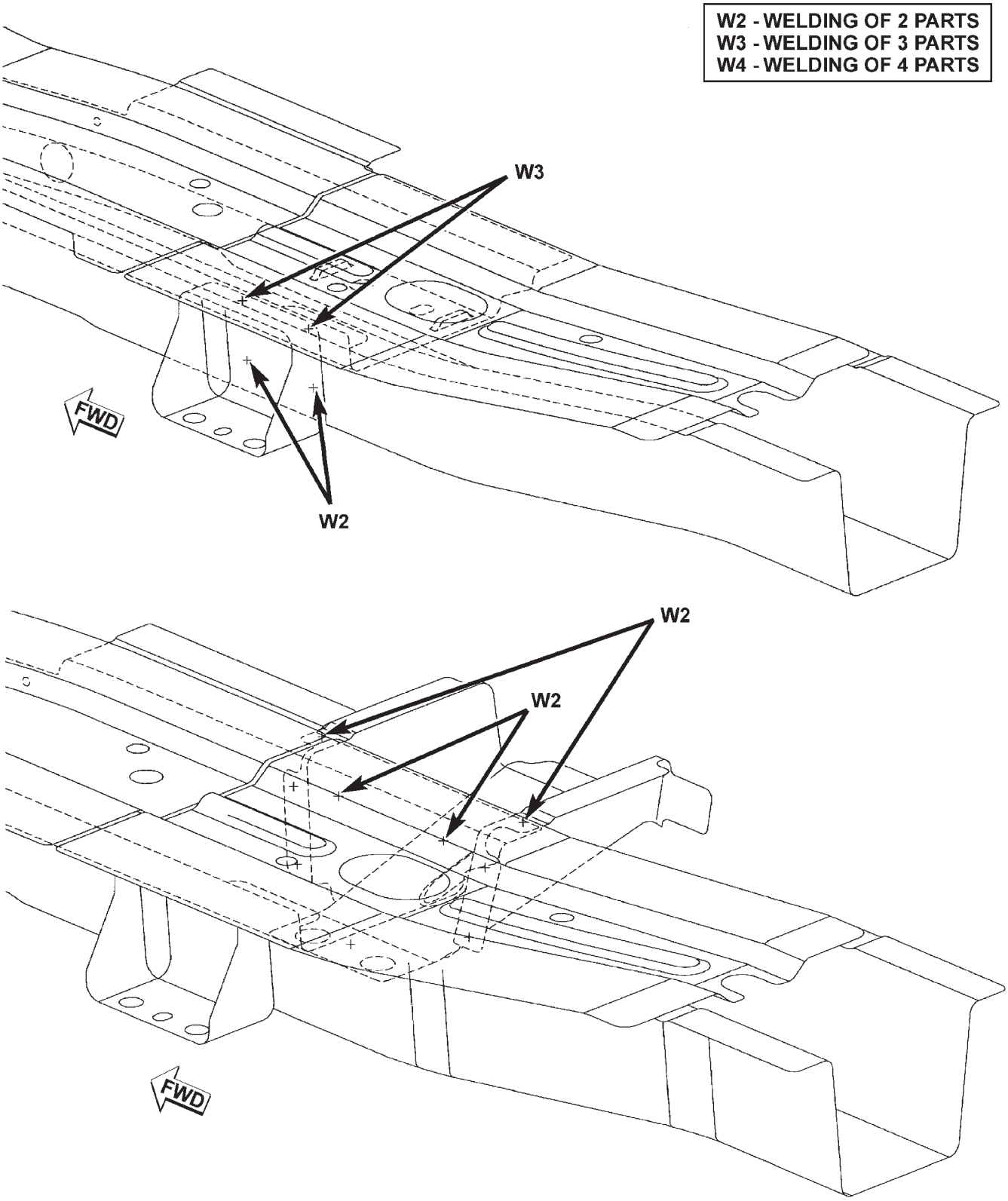

80b6fe83

SPECIFICATIONS (Continued)

UPPER SILLS AND UPPER CONTROL ARM REINFORCEMENT AND BRACKETS TO FRONTSILLS

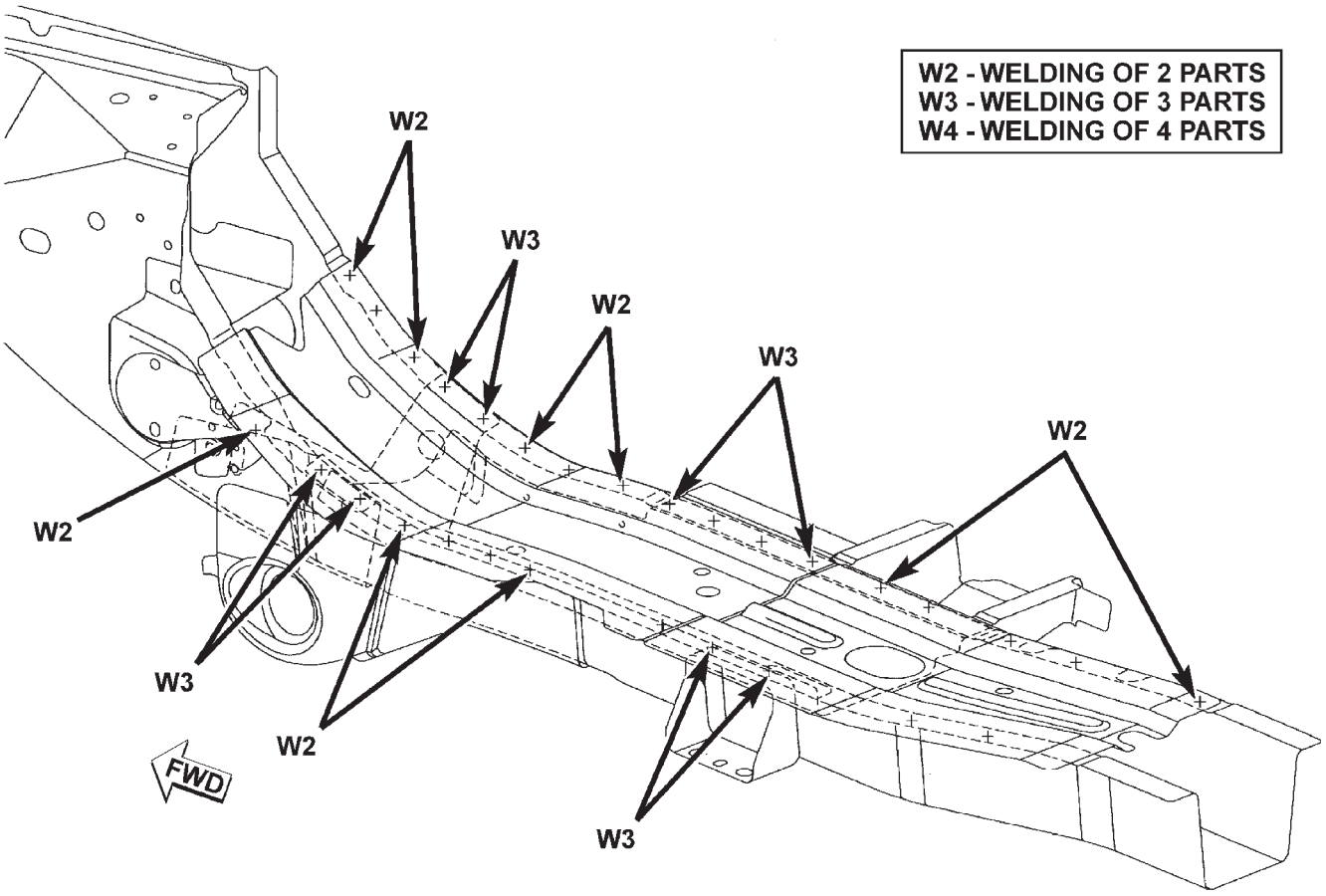

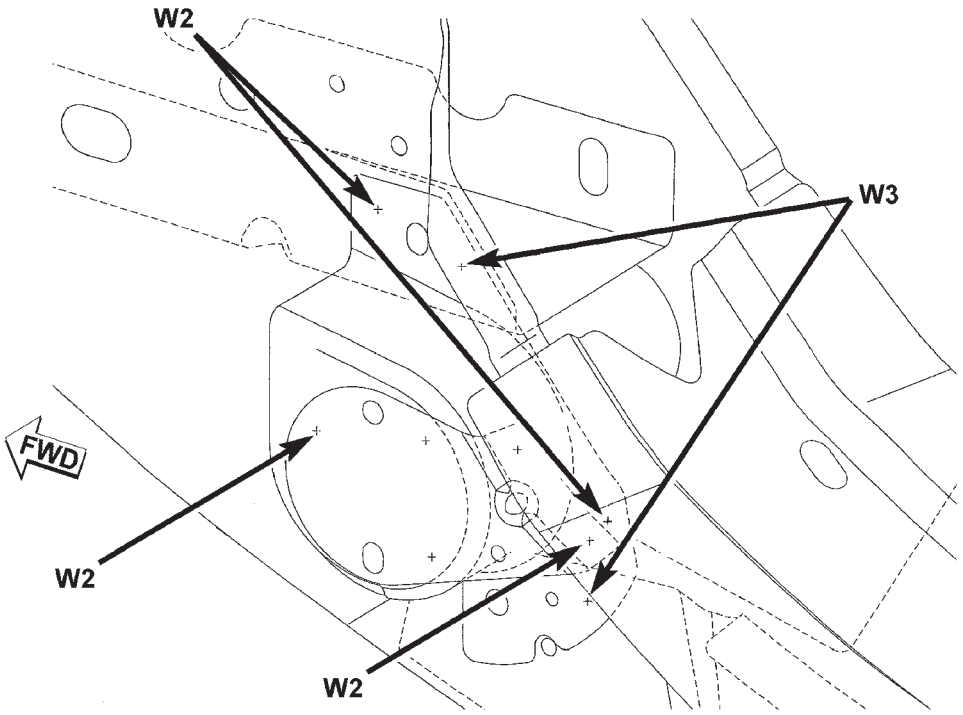

80b6fe84

SPECIFICATIONS (Continued)

REINFORCEMENT TO FRONT OUTER SILLS

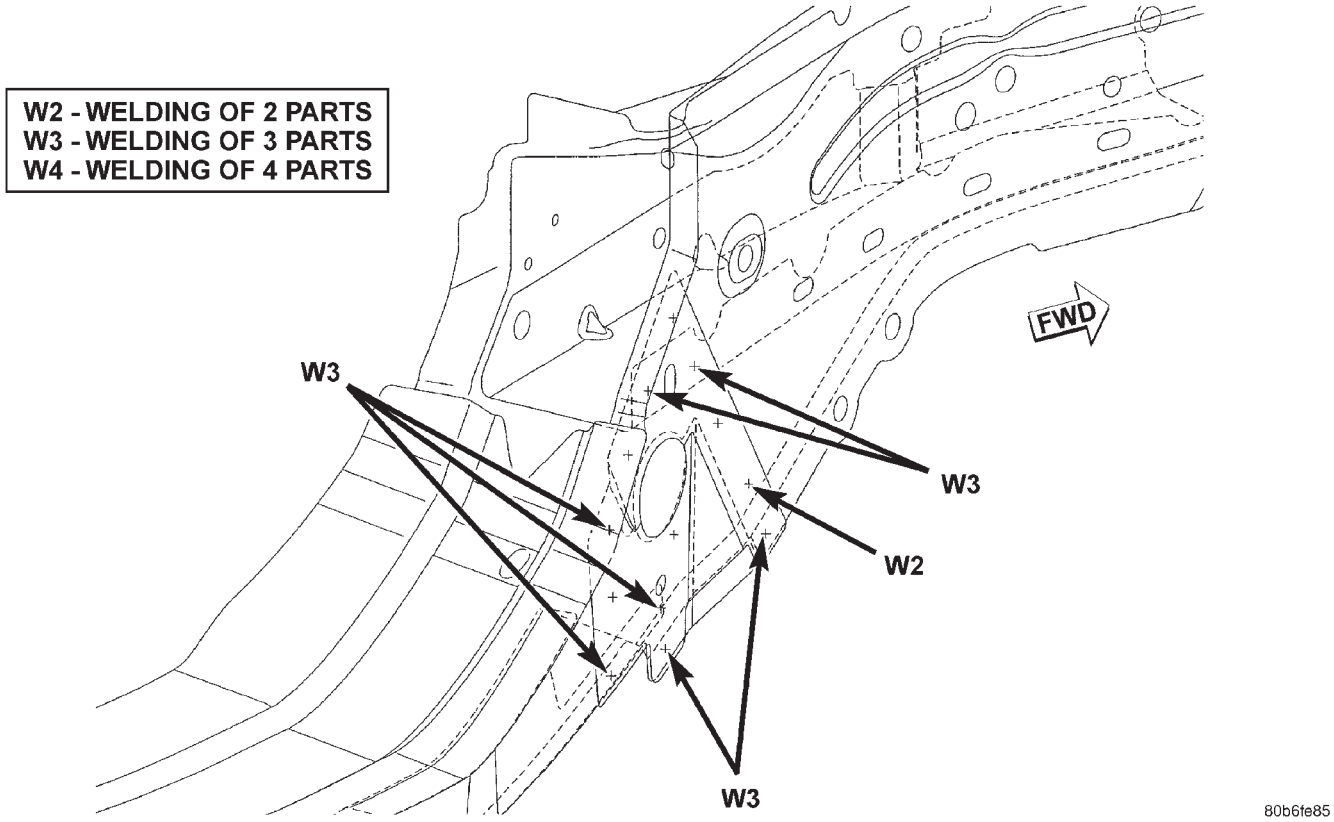

FRONT INNER SILL TO FRONT OUTER SILL

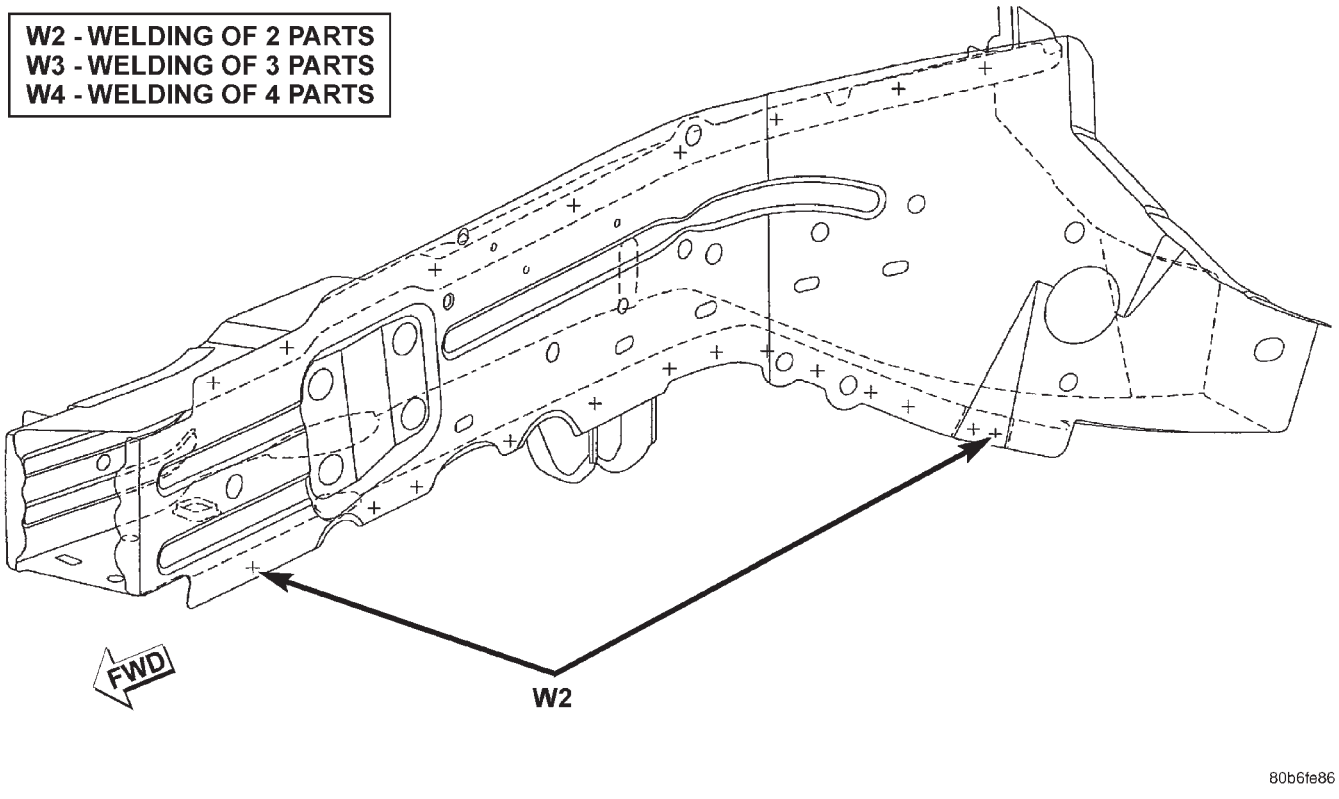

SPECIFICATIONS (Continued)

OUTER TRACK BAR BRACKET TO FRONT OUTER SILL

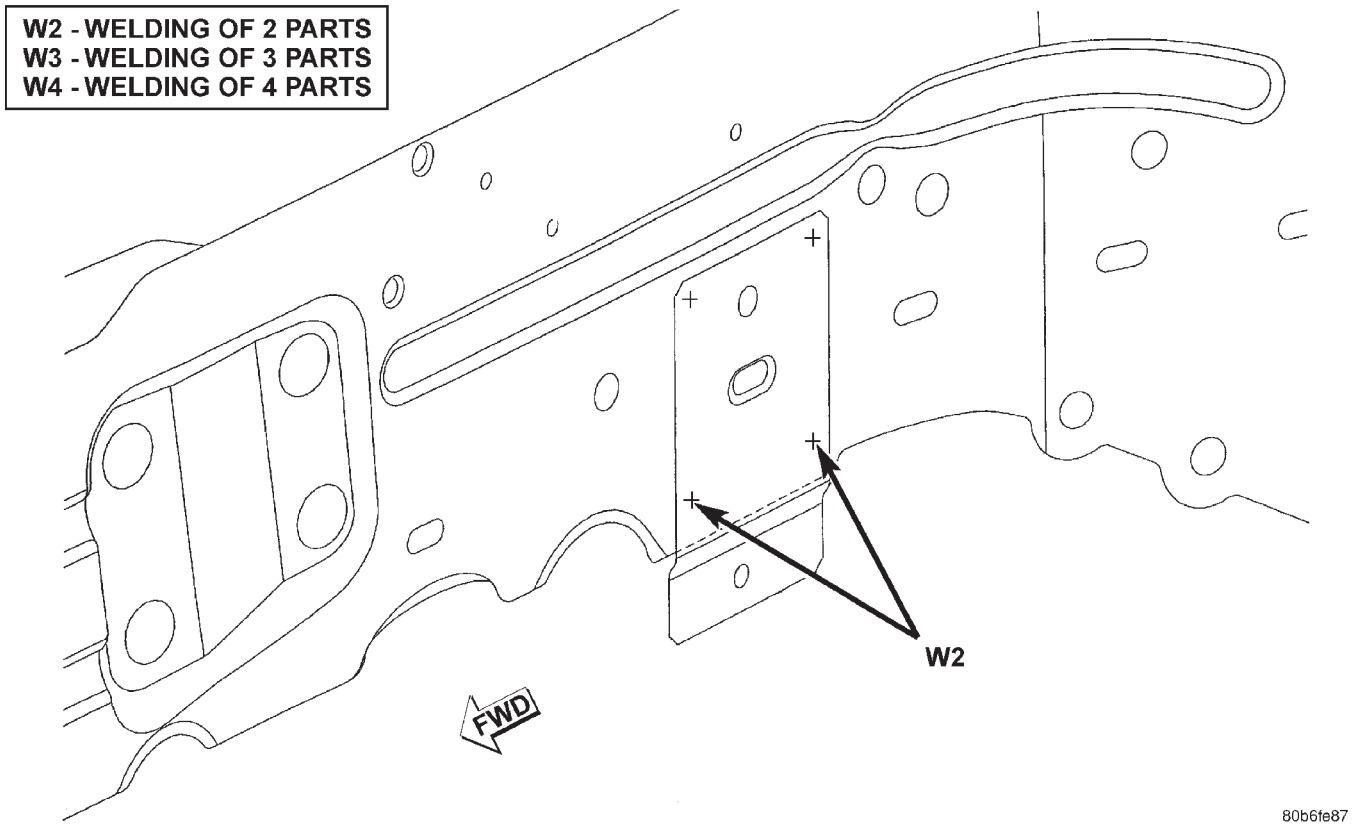

SPECIFICATIONS (Continued)

REINFORCEMENT FOR FRONT ENGINE MOUNTING AND STEERING GEAR TO FRONT INNER SILL

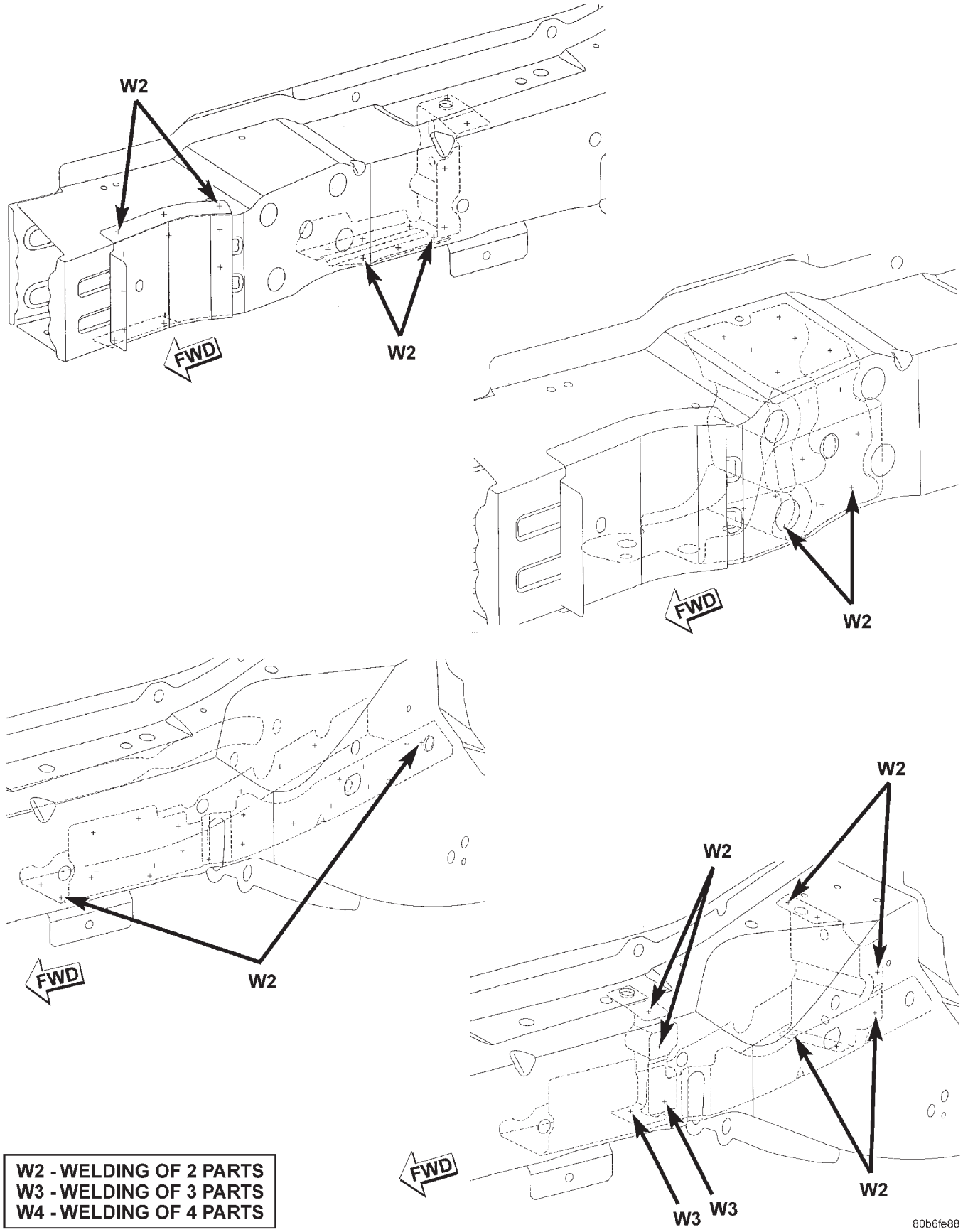

W2 - WELDING OF 2 PARTS
W3 - WELDING OF 3 PARTS
W4 - WELDING OF 4 PARTS

SPECIFICATIONS (Continued)

LARGE AND SMALL SWAY BAR TAPPING PLATES TO FRONT INNER SILLS

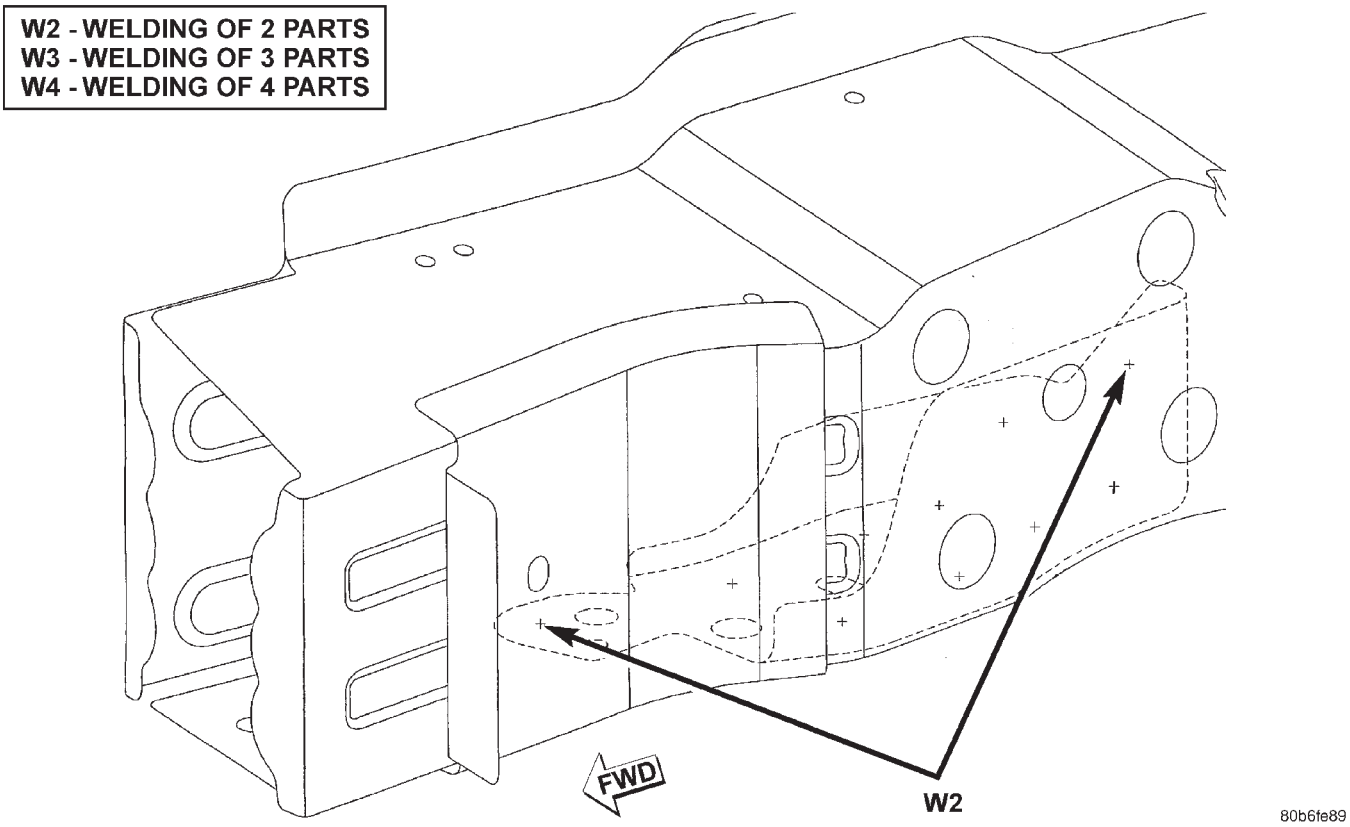

SPECIFICATIONS (Continued)

FRONT AND REAR DOOR HINGE TAPPING PLATES

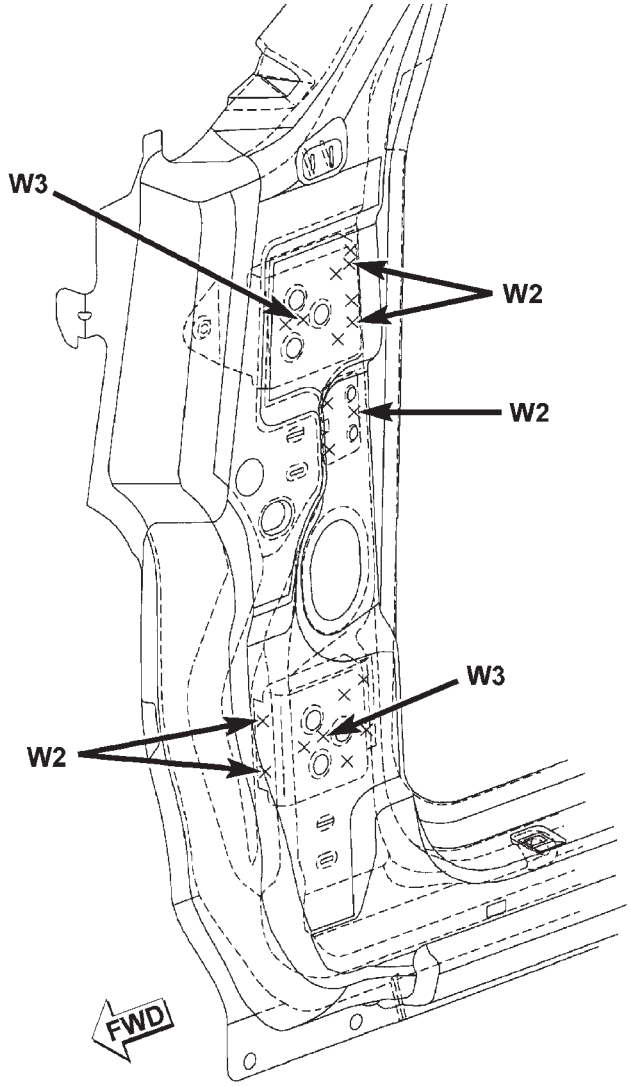

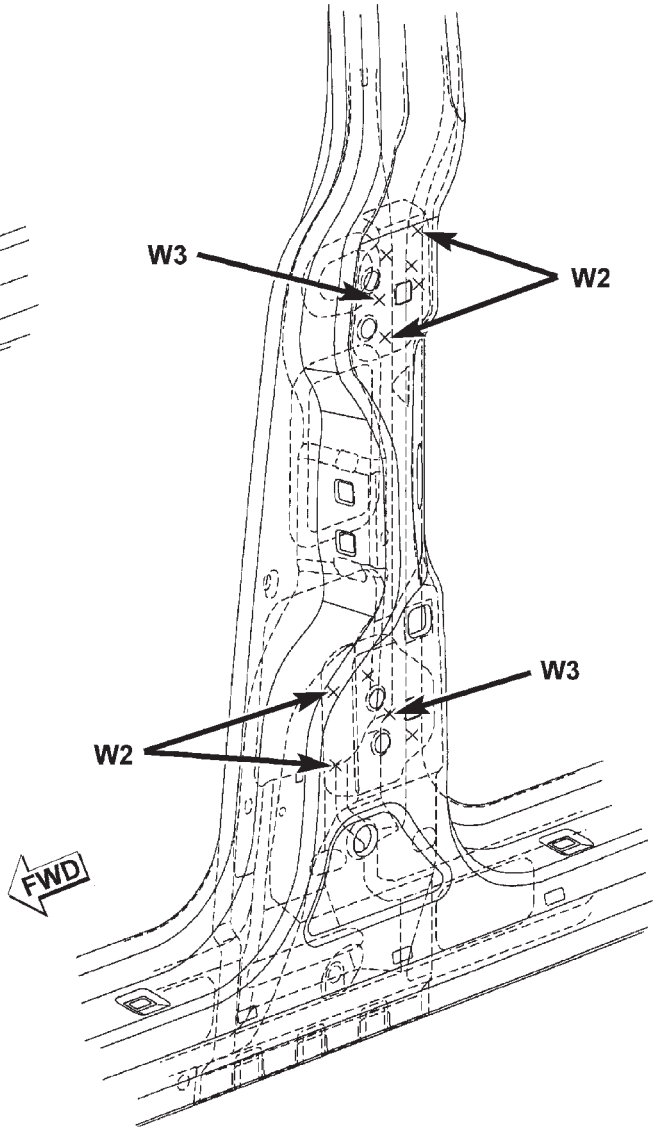

W2 - WELDING OF 2 PARTS
W3 - WELDING OF 3 PARTS
W4 - WELDING OF 4 PARTS

80b6fe7f

SPECIFICATIONS (Continued)

REAR DOOR STRIKER REINFORCEMENT

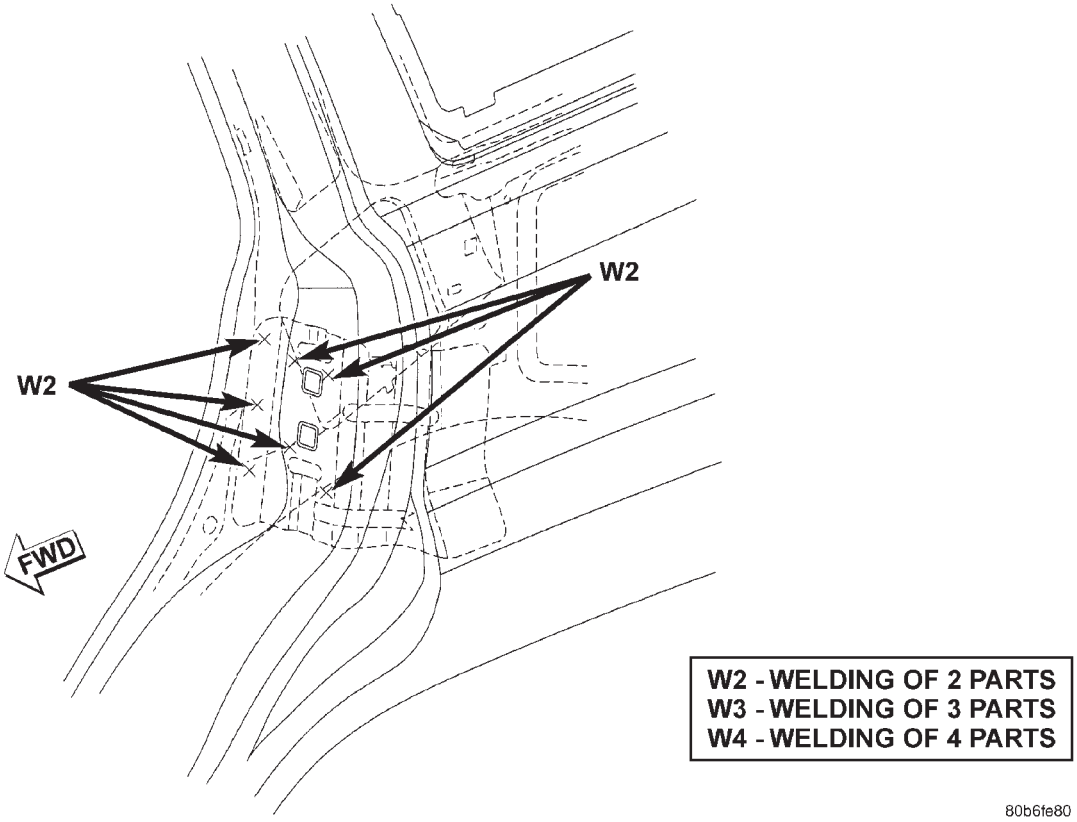

SPECIFICATIONS (Continued)

TAIL LAMP MOUNTING PANELS

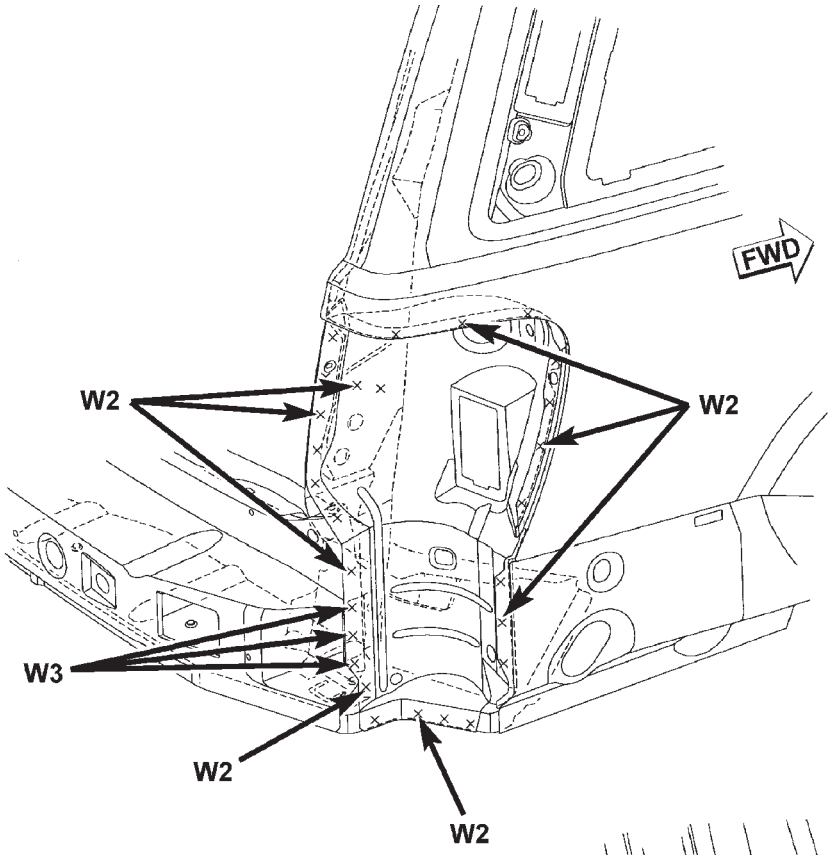

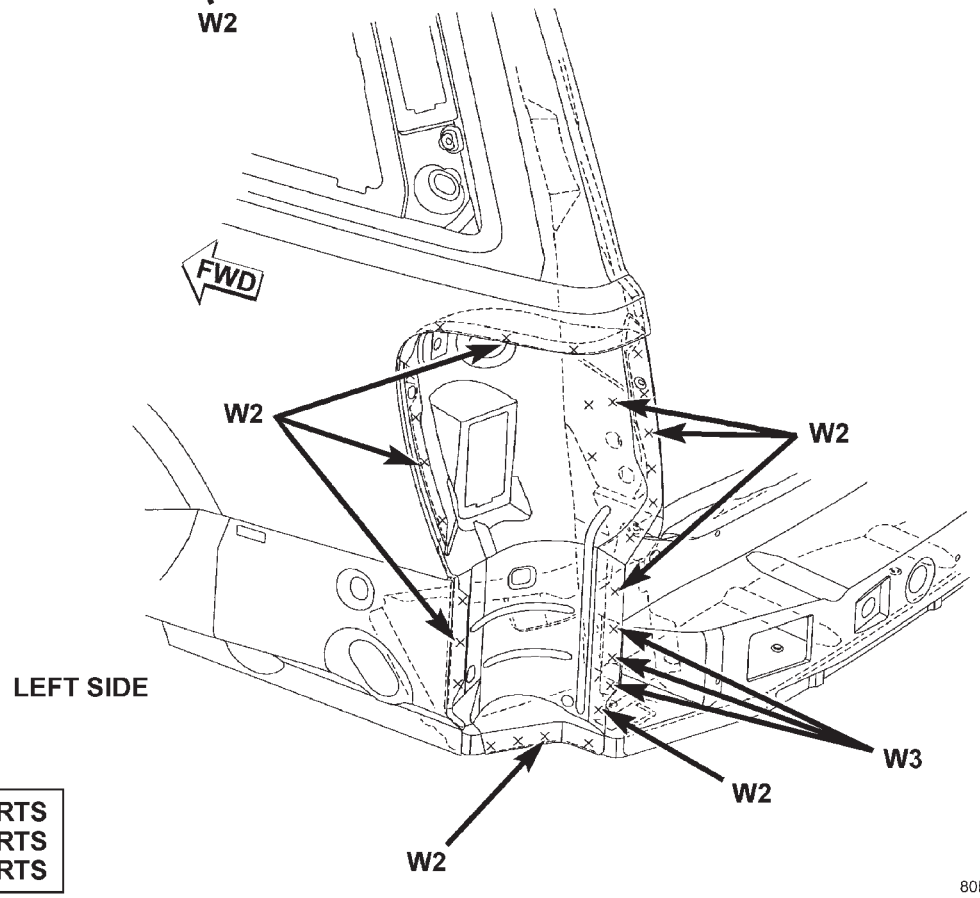

W2 - WELDING OF 2 PARTS
W3 - WELDING OF 3 PARTS
W4 - WELDING OF 4 PARTS

80b6fe81

SPECIFICATIONS (Continued)

ROOF PANEL TO BODYSIDE APERTURE

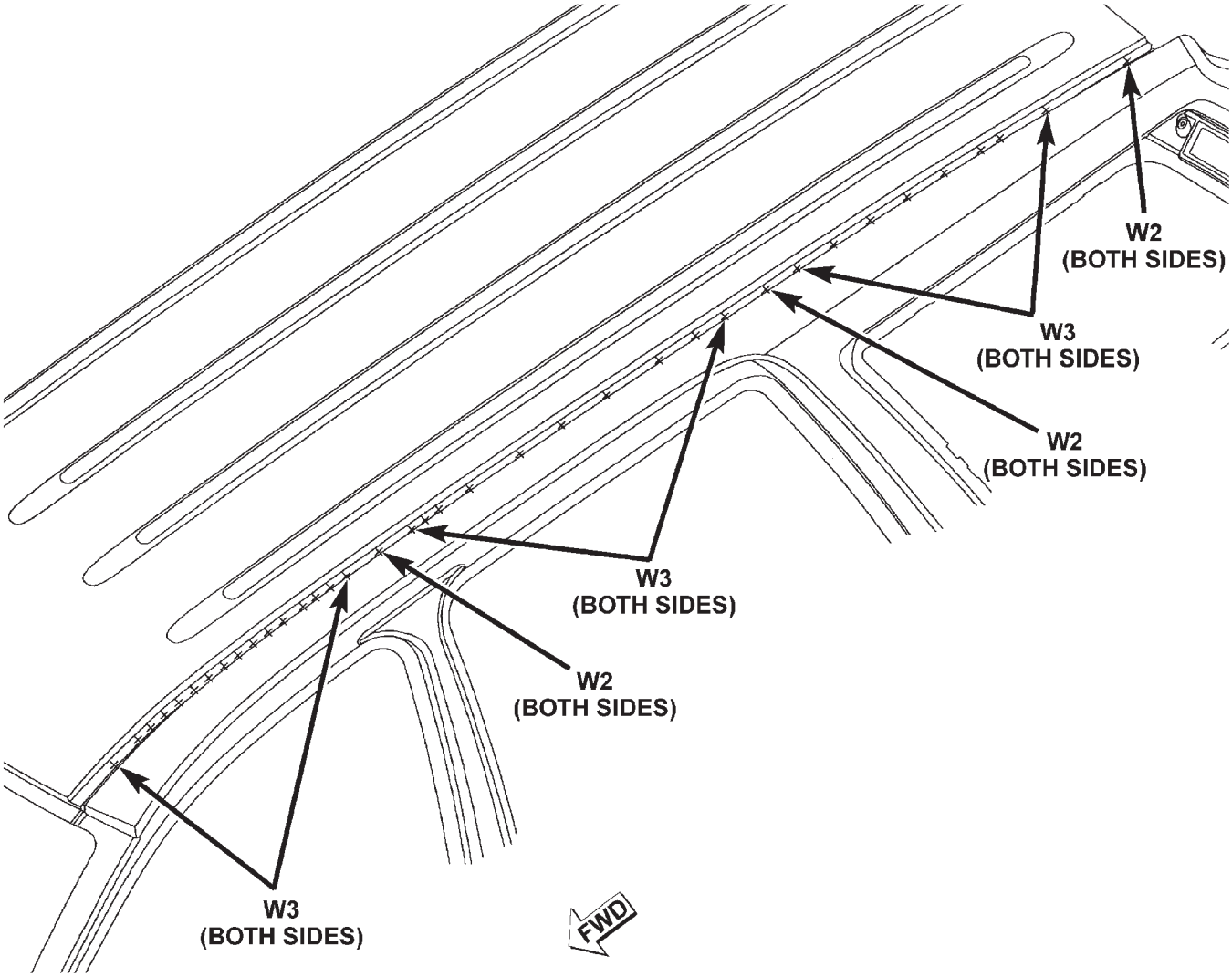

W2 - WELDING OF 2 PARTS
W3 - WELDING OF 3 PARTS
W4 - WELDING OF 4 PARTS

80b6fe49

SPECIFICATIONS (Continued)

ROOF PANEL TO REAR HEADER

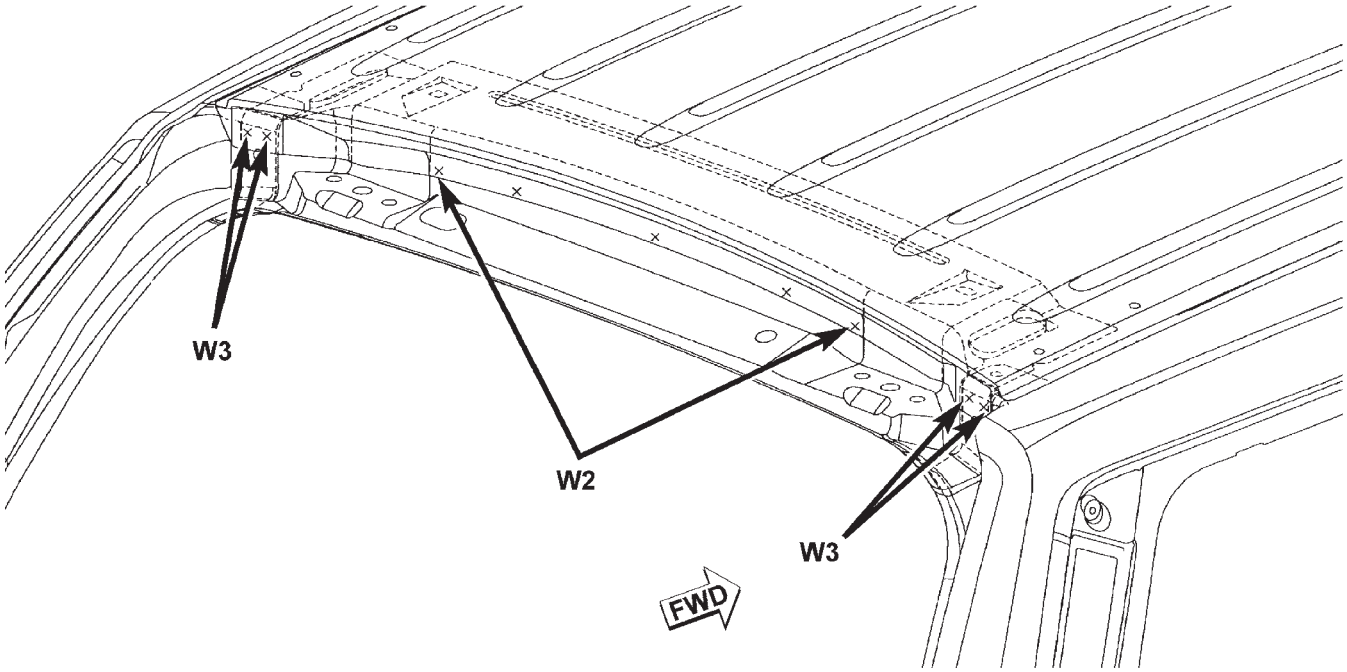

W2 - WELDING OF 2 PARTS
W3 - WELDING OF 3 PARTS
W4 - WELDING OF 4 PARTS

80b6fe4a

SPECIFICATIONS (Continued)

UPPER REAR HEADER TO LOWER HEADER

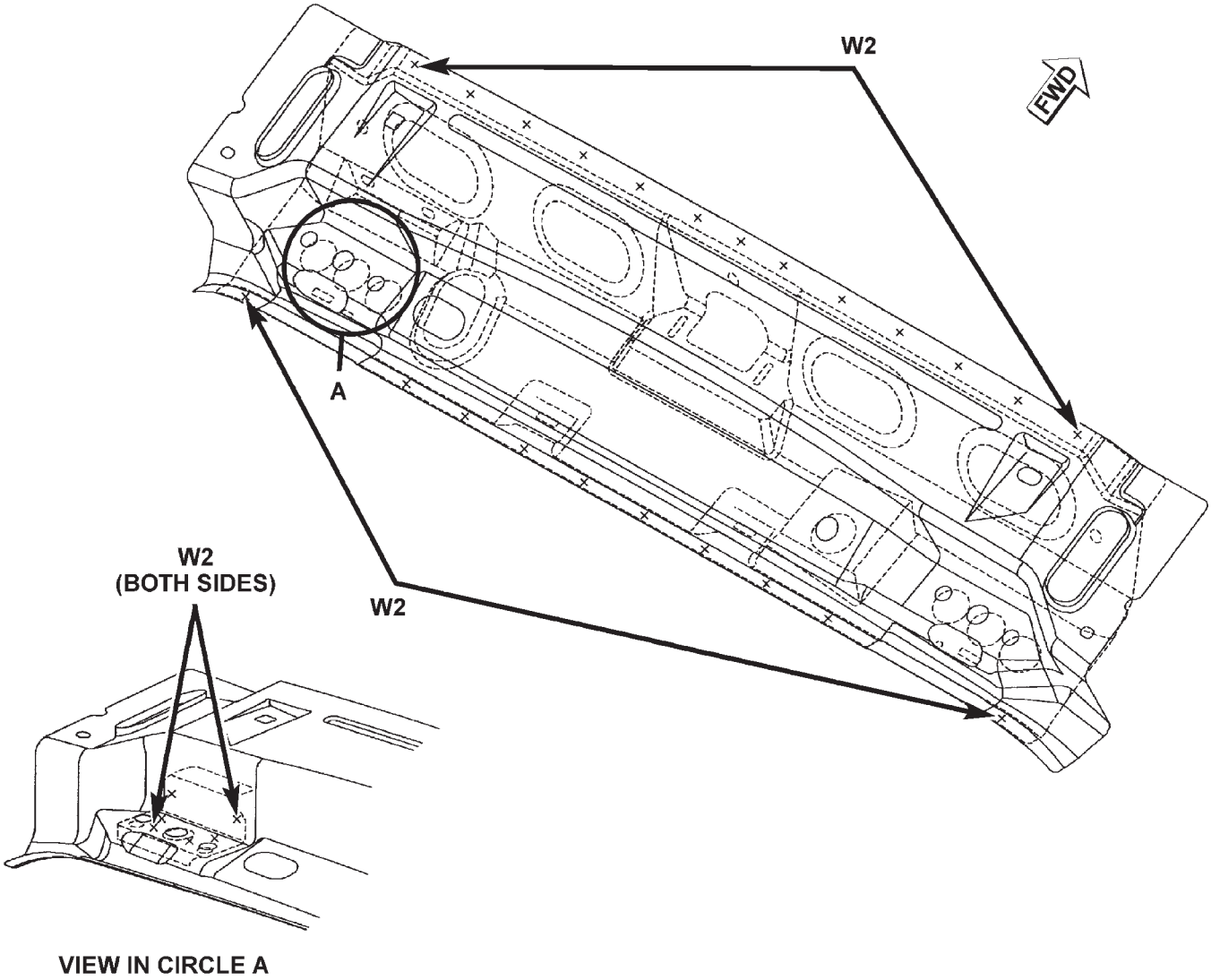

W2 - WELDING OF 2 PARTS
W3 - WELDING OF 3 PARTS
W4 - WELDING OF 4 PARTS

80b6fe4b

SPECIFICATIONS (Continued)

FRONT HEADER AND ROOF BOWS TO INNER PANEL

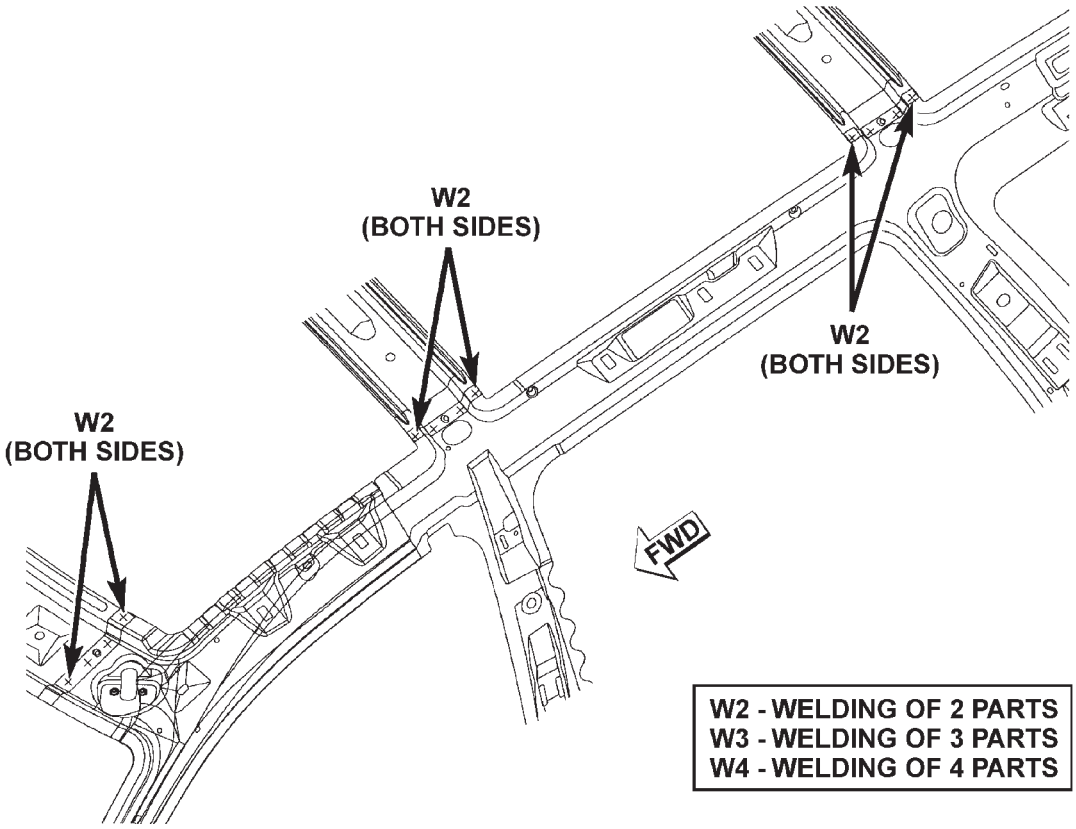

80b6fe4c

SPECIFICATIONS (Continued)

FRONT SEAT/SHOULDER BELT TO INNER PANEL REINFORCEMENT

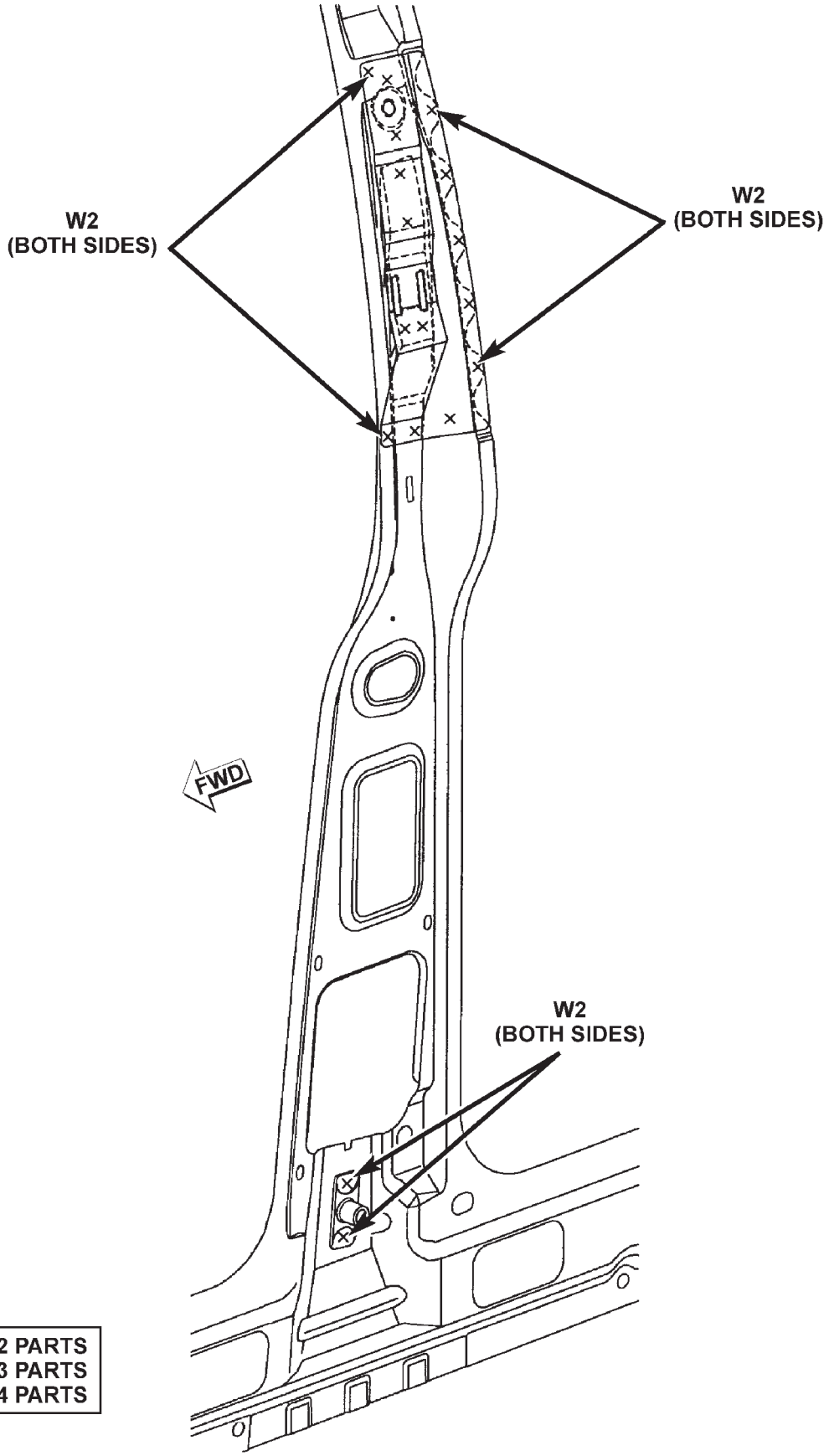

W2 - WELDING OF 2 PARTS
W3 - WELDING OF 3 PARTS
W4 - WELDING OF 4 PARTS

SPECIFICATIONS (Continued)

REAR SEAT/SHOULDER BELT TO INNER PANEL REINFORCEMENT

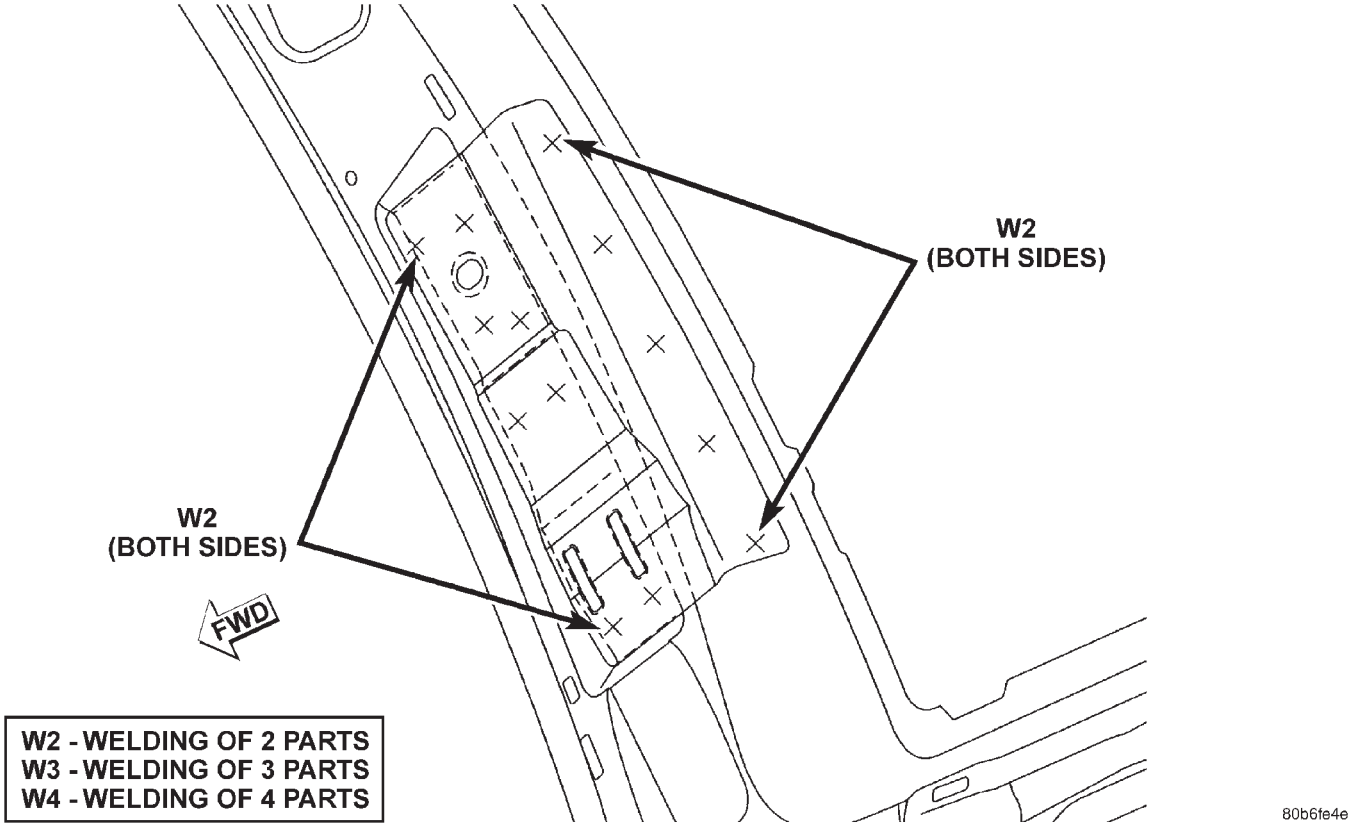

FUEL FILLER GUSSET TO INNER QUARTER PANEL

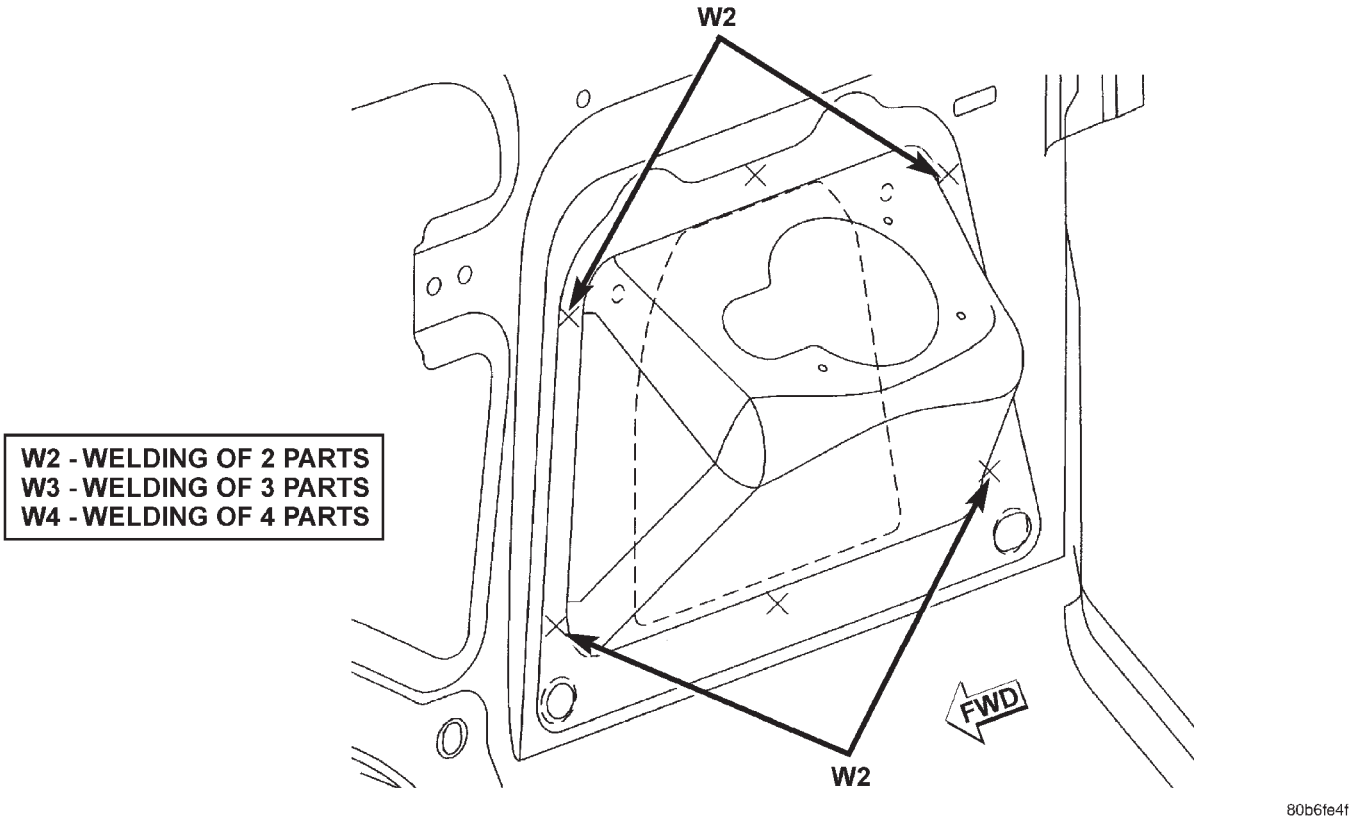

SPECIFICATIONS (Continued)

FRONT FLOOR PAN TO SILL REINFORCEMENT

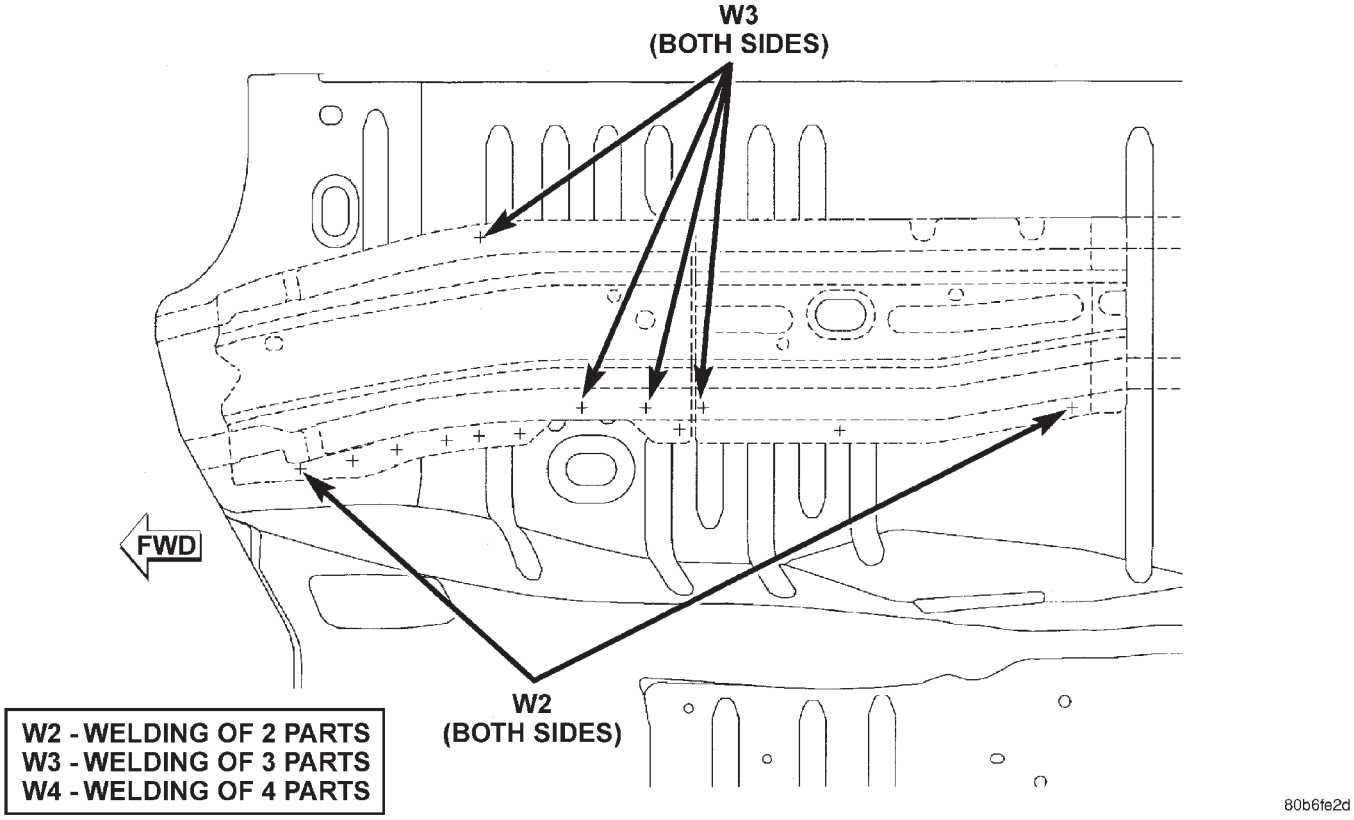

SPECIFICATIONS (Continued)

CENTER FLOOR PAN TO REAR SEAT CROSSMEMBER

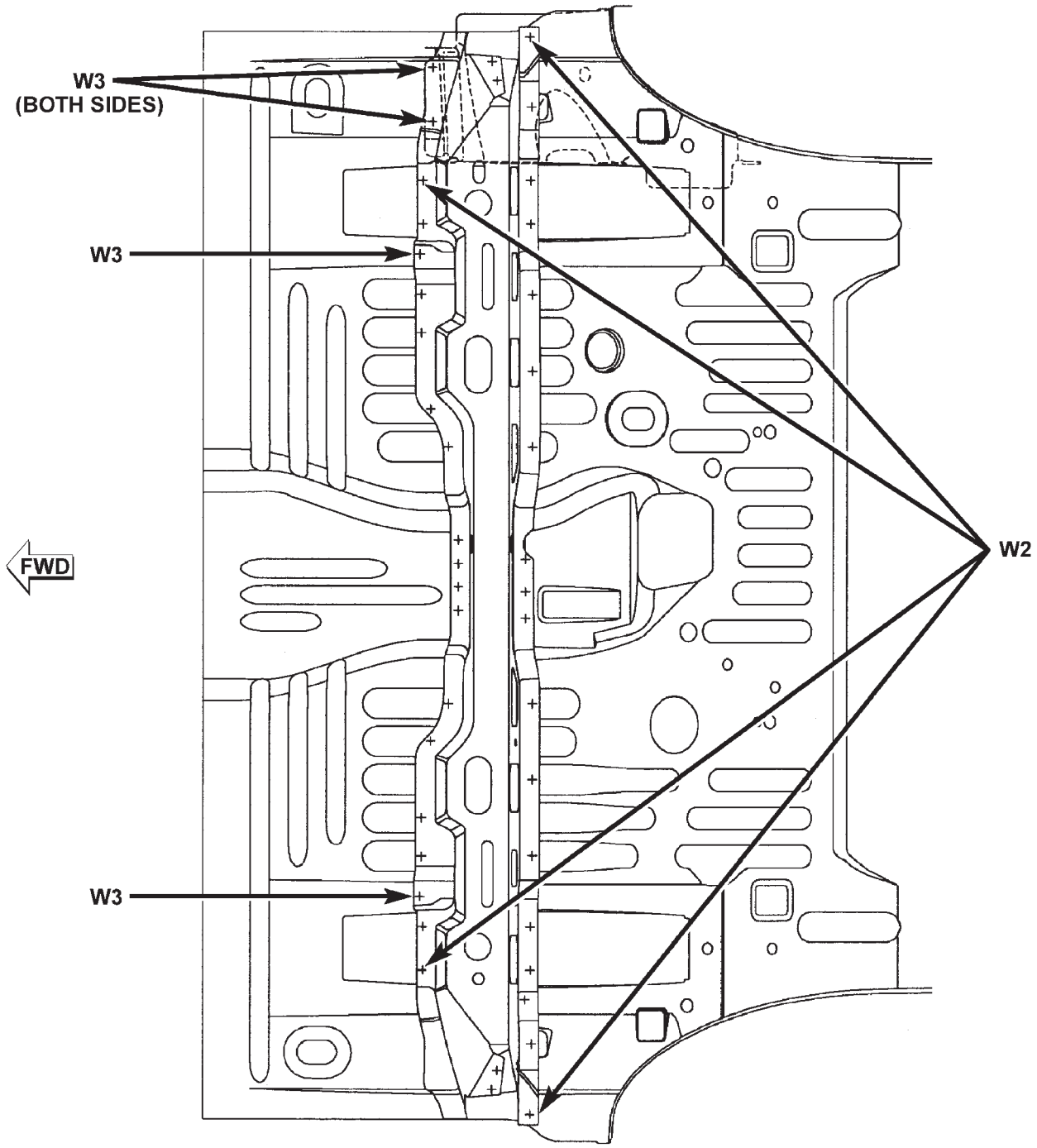

W2 - WELDING OF 2 PARTS
W3 - WELDING OF 3 PARTS
W4 - WELDING OF 4 PARTS

80b6fe2e

SPECIFICATIONS (Continued)

FRONT FLOOR PAN TO FRONT SEAT REINFORCEMENT AND RAILS

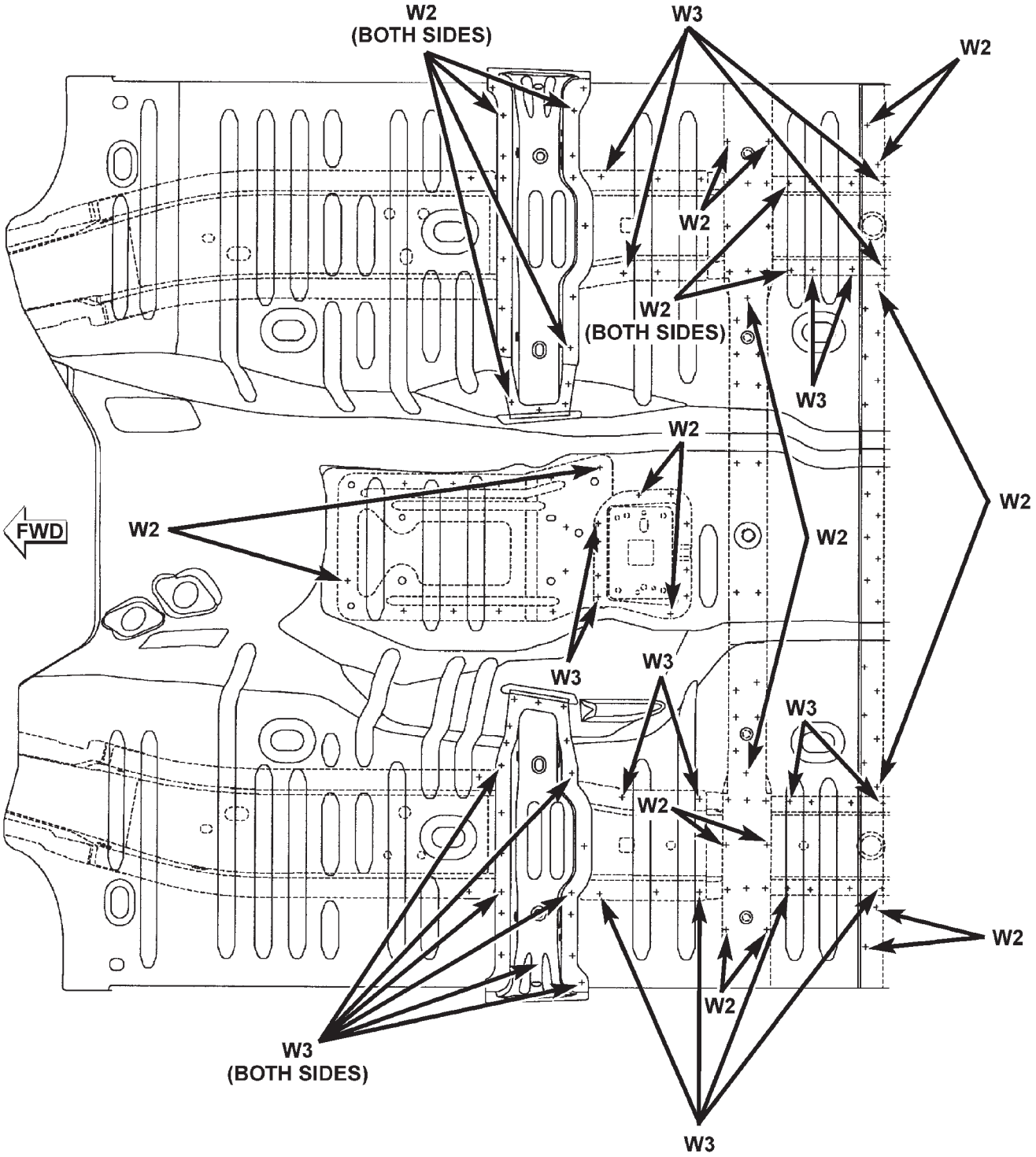

W2 - WELDING OF 2 PARTS
W3 - WELDING OF 3 PARTS
W4 - WELDING OF 4 PARTS

80b6fe2f

SPECIFICATIONS (Continued)

CENTER FLOOR PAN TO UPPER CONTROL ARM CROSSMEMBER AND RAILS

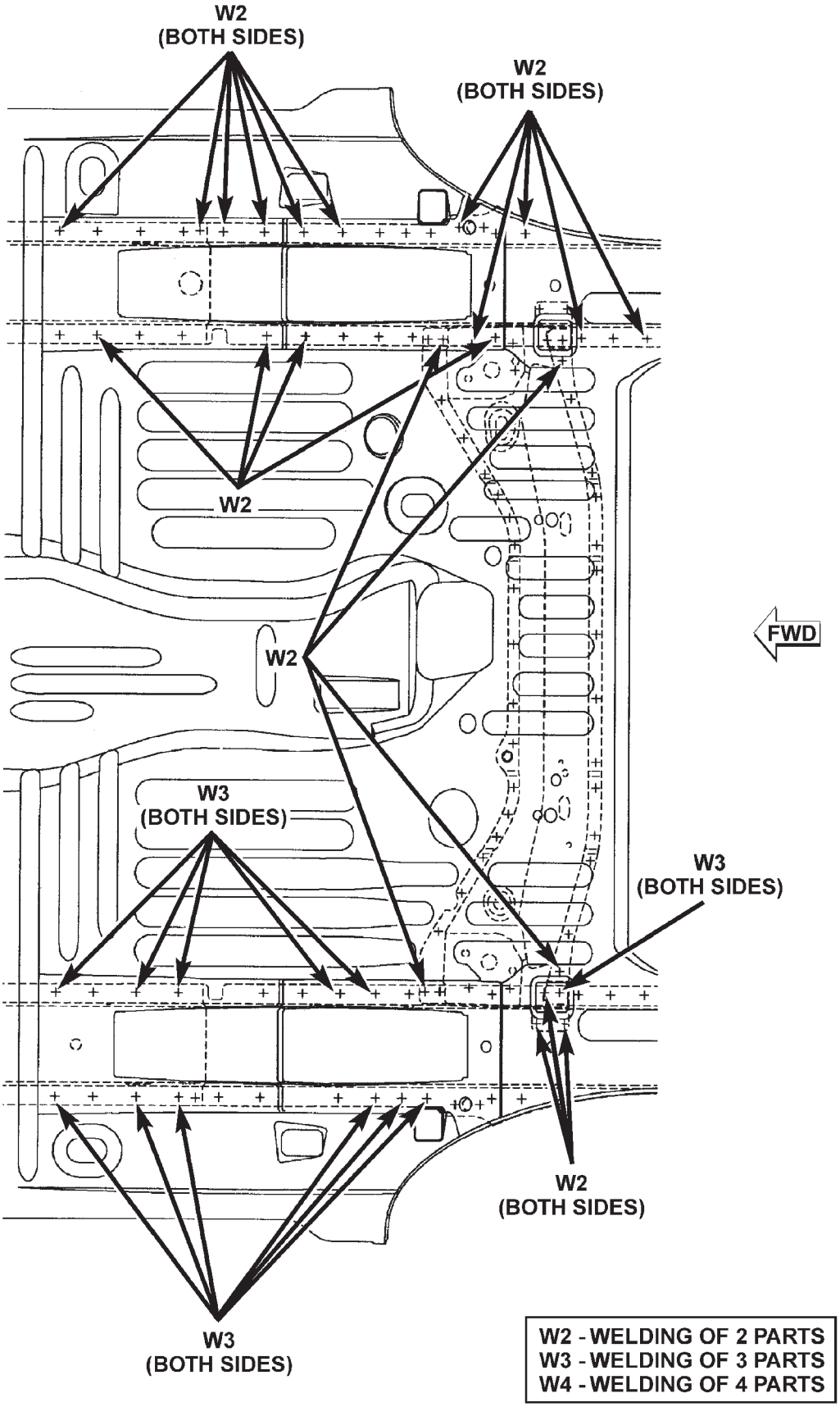

SPECIFICATIONS (Continued)

REAR FLOOR PAN TO RAILS AND SPRING GUIDE CROSSMEMBER

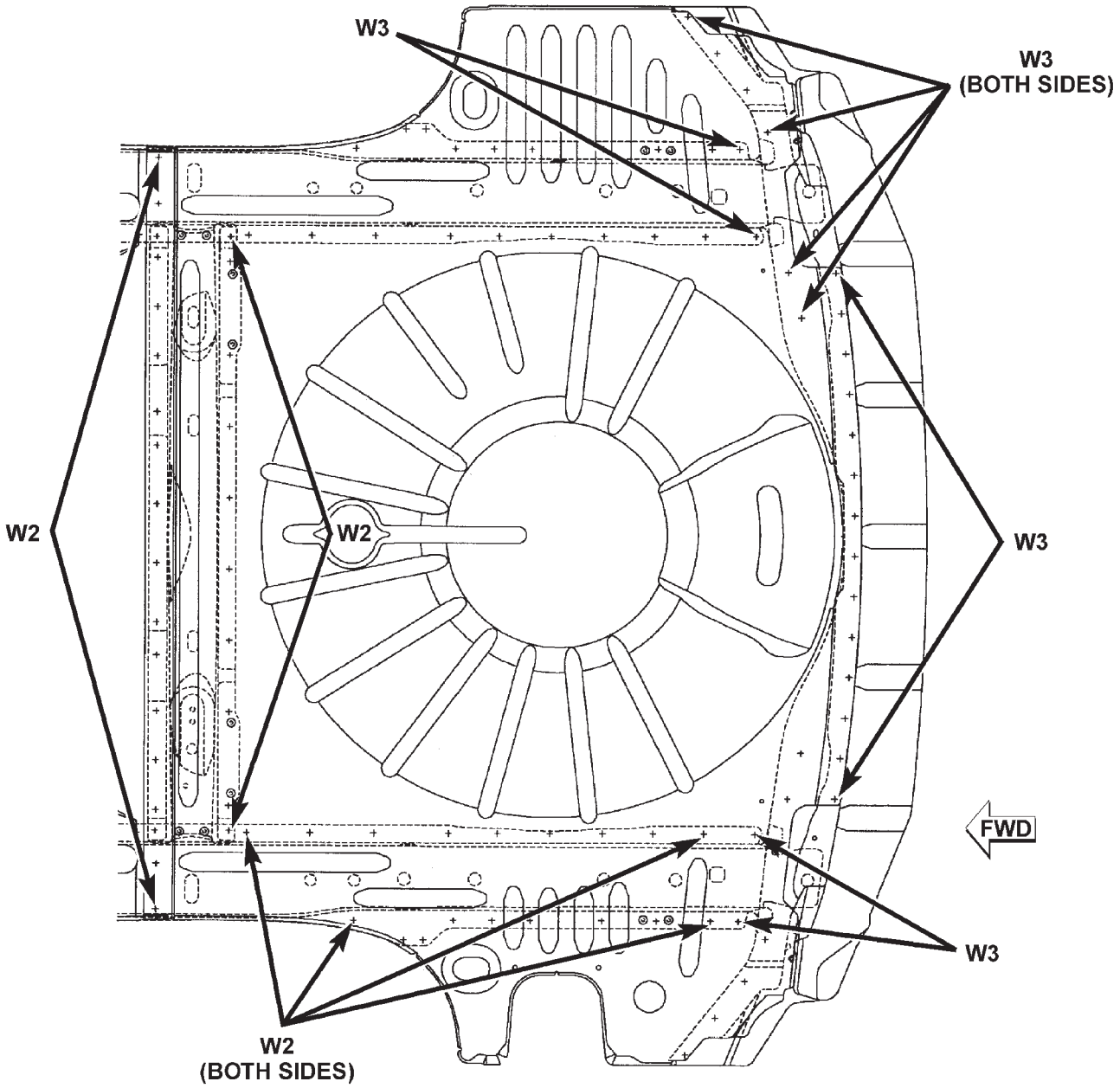

W2 - WELDING OF 2 PARTS
W3 - WELDING OF 3 PARTS
W4 - WELDING OF 4 PARTS

80b6fe31

SPECIFICATIONS (Continued)

REAR RAILS

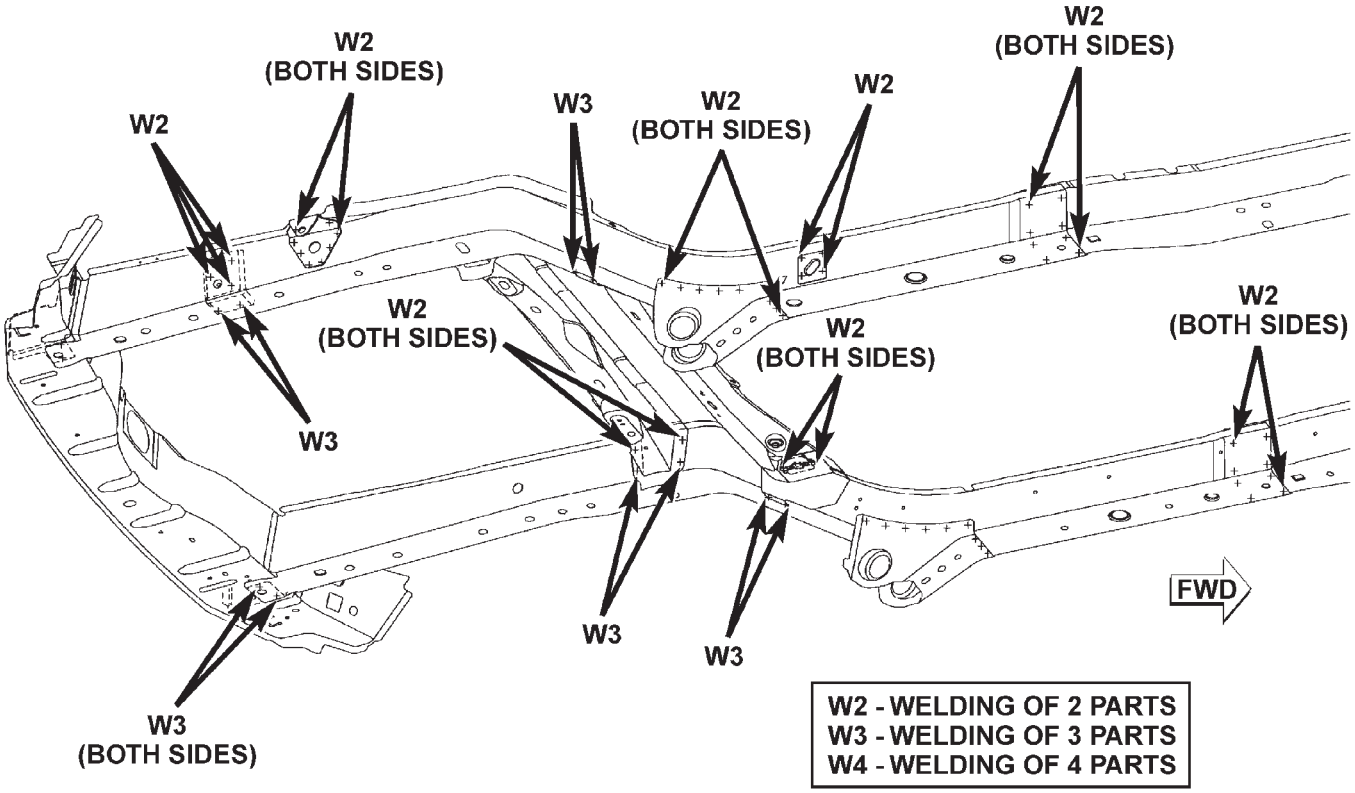

80b6fe32

UPPER CONTROL ARM CROSSMEMBER TO REAR RAIL

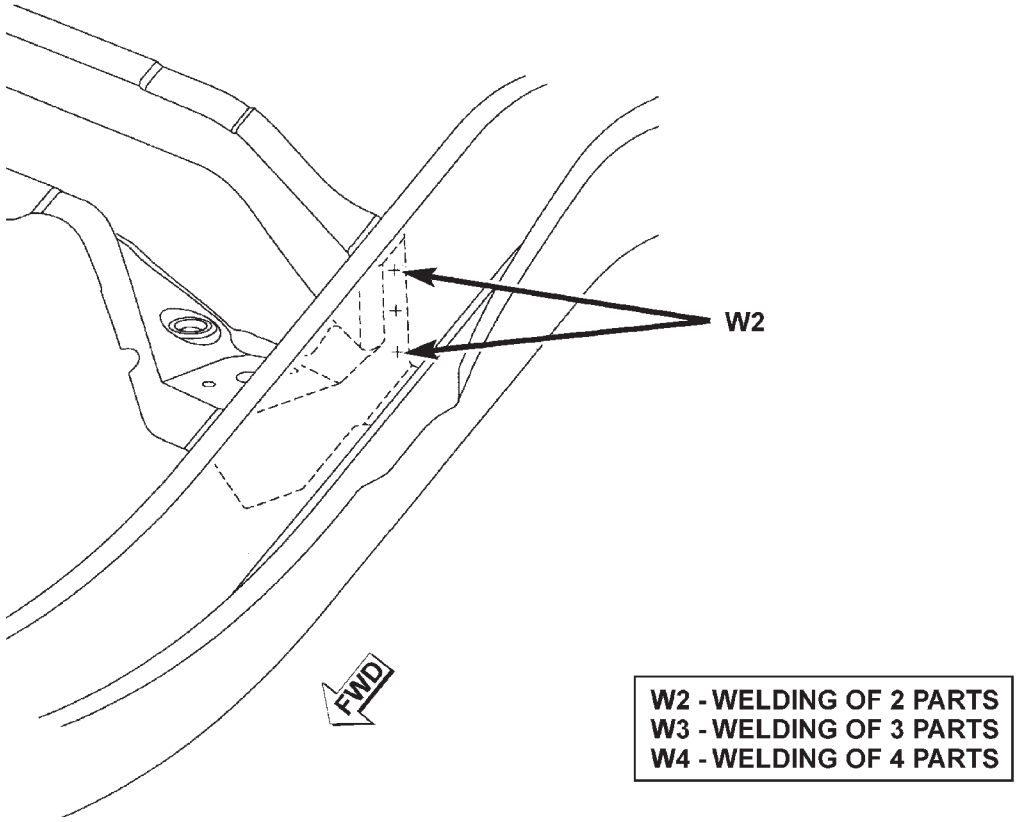

80b6fe33

SPECIFICATIONS (Continued)

REAR RAIL REINFORCEMENT TO REAR RAILS

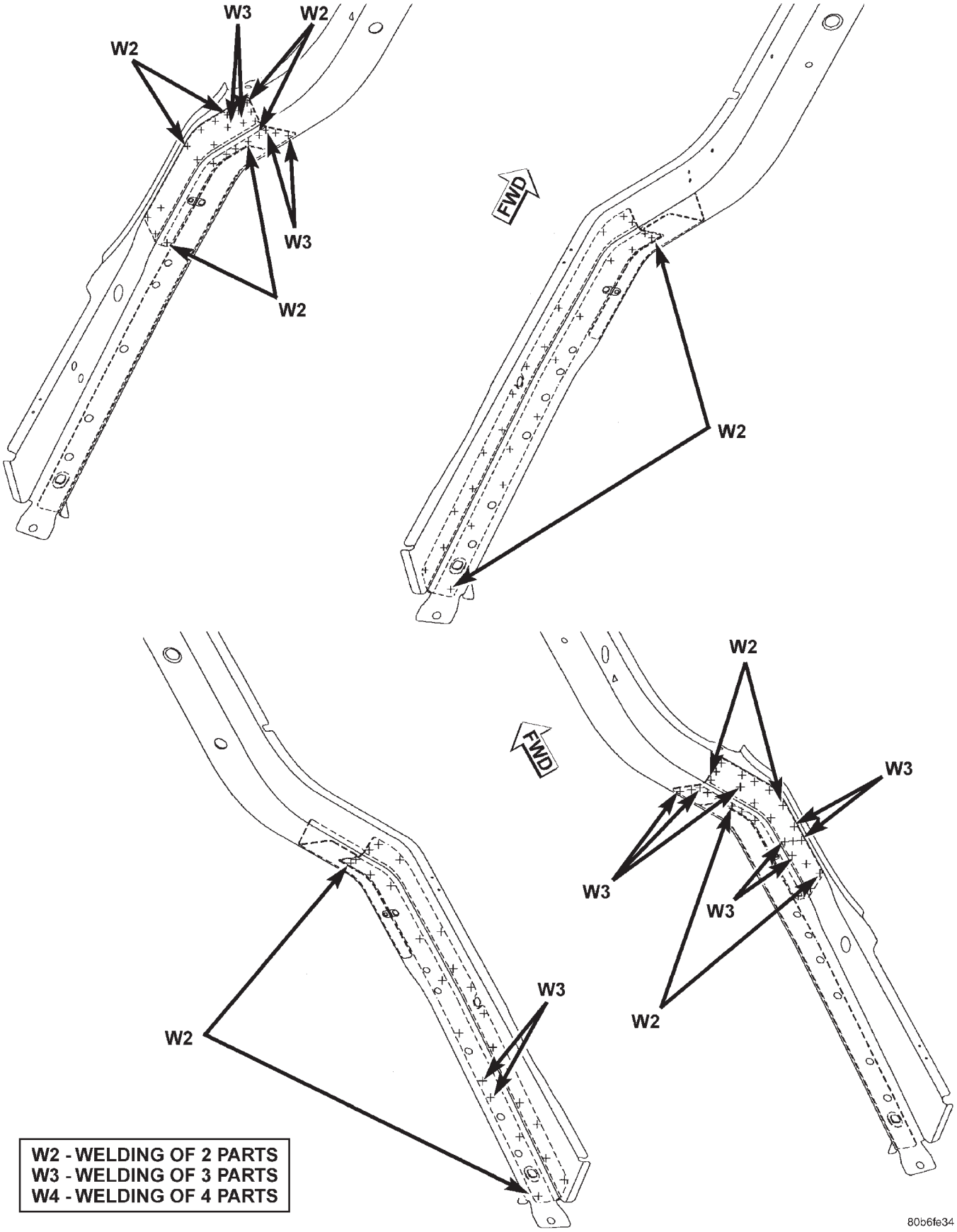

SPECIFICATIONS (Continued)

UPPER CONTROL ARM REINFORCEMENTS TO REAR RAIL

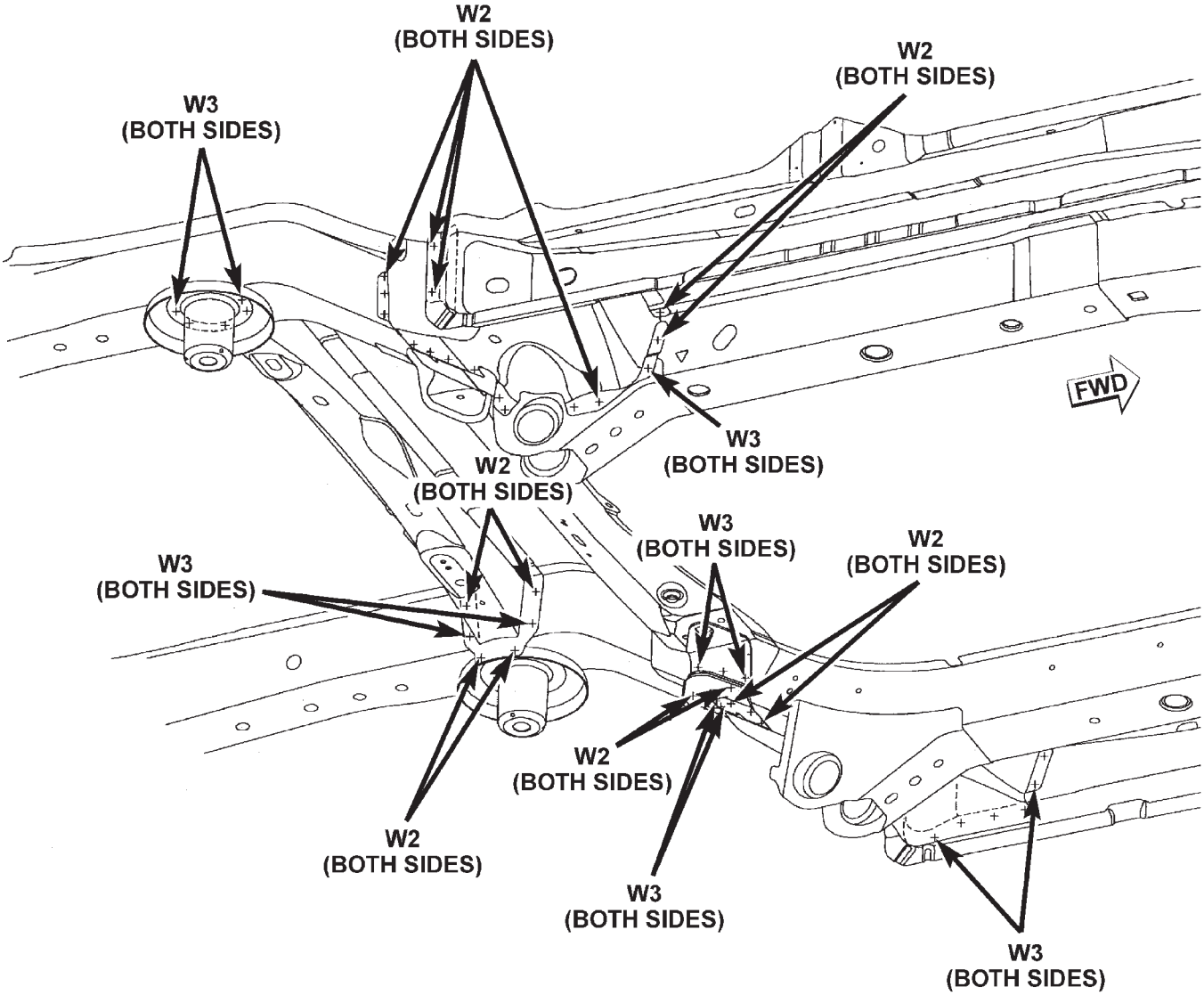

W2 - WELDING OF 2 PARTS
W3 - WELDING OF 3 PARTS
W4 - WELDING OF 4 PARTS

80b6fe35

SPECIFICATIONS (Continued)

OUTER TRANSMISSION CROSSMEMBER REINFORCEMENT TO RAIL AND BODYSIDE SILL

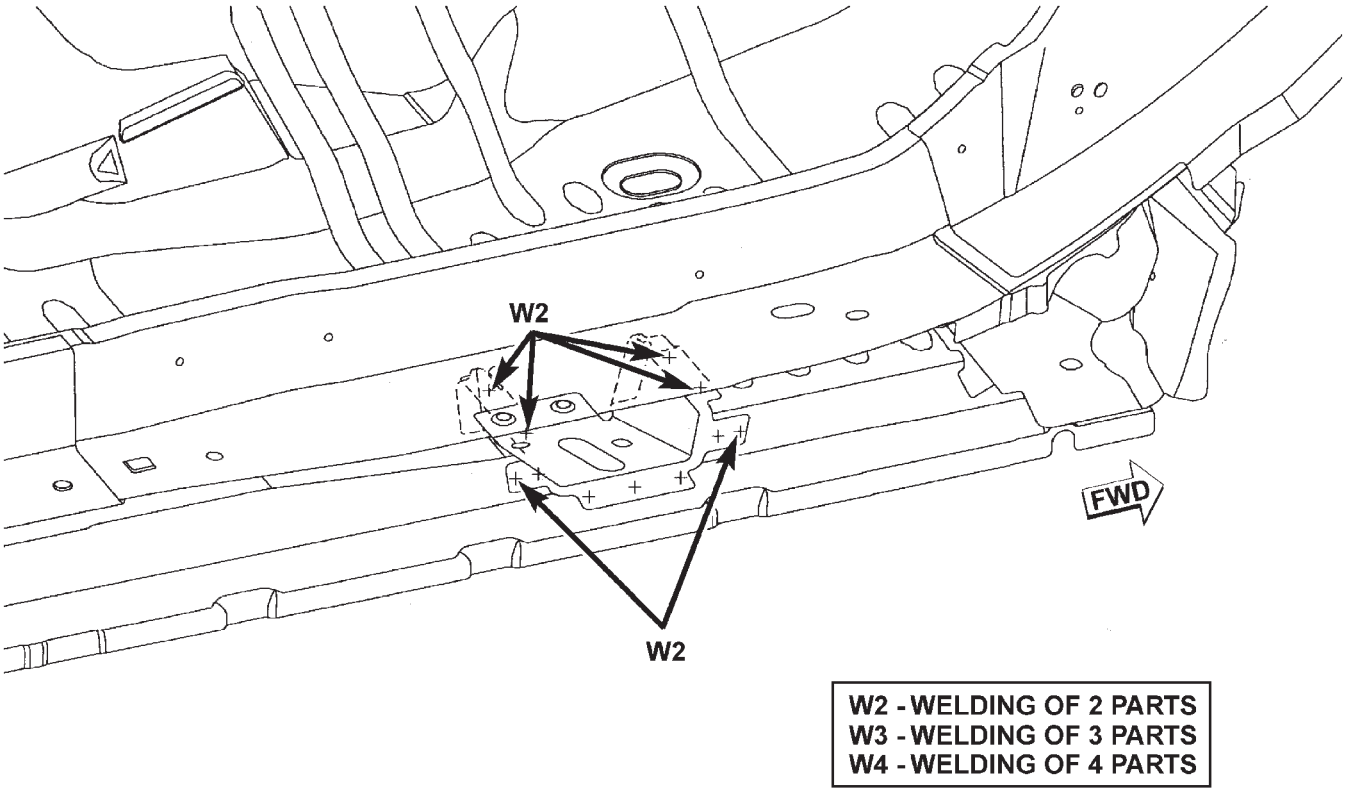

80b6fe36

BODYSIDE SILL TO FLOOR PAN

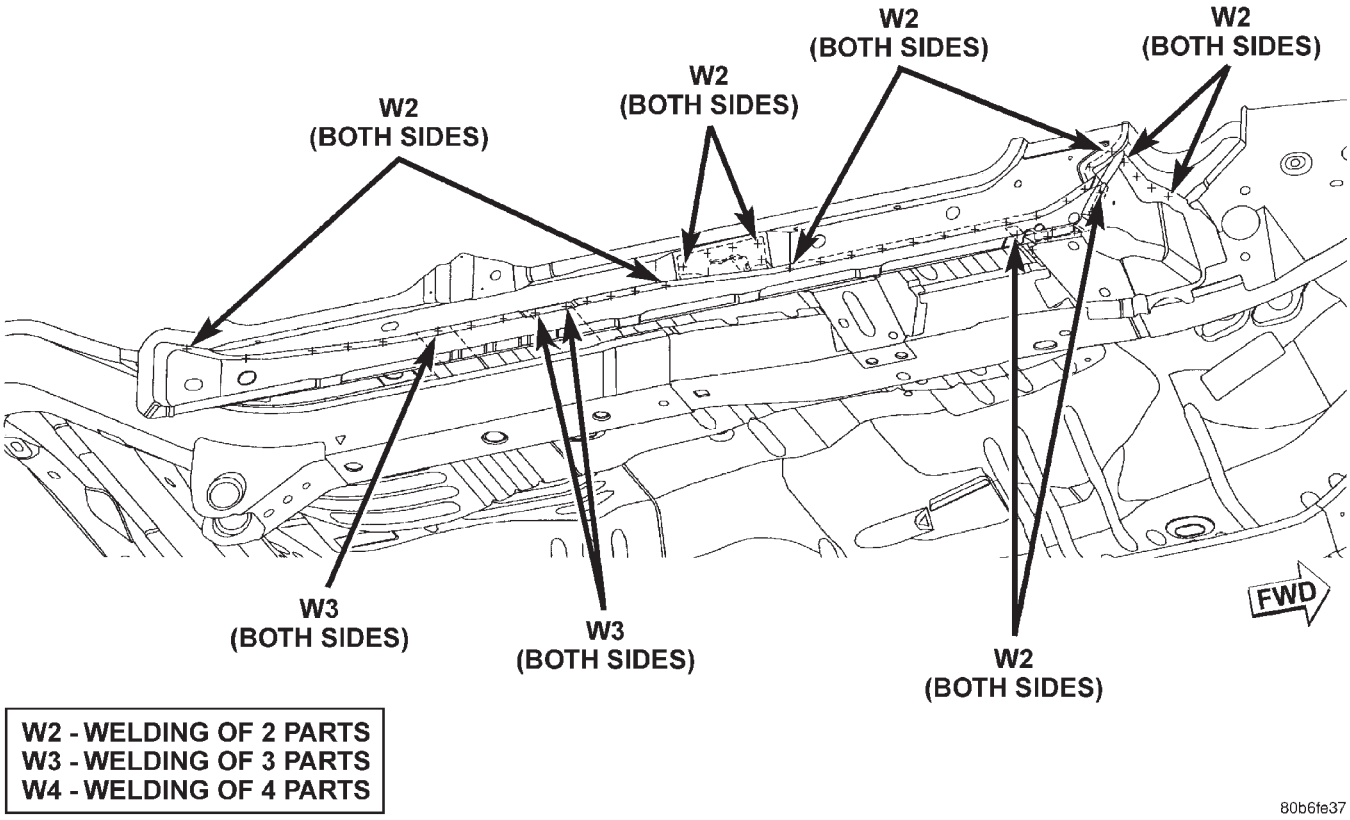

80b6fe37

SPECIFICATIONS (Continued)

REAR RAILS TO REAR CROSSMEMBER

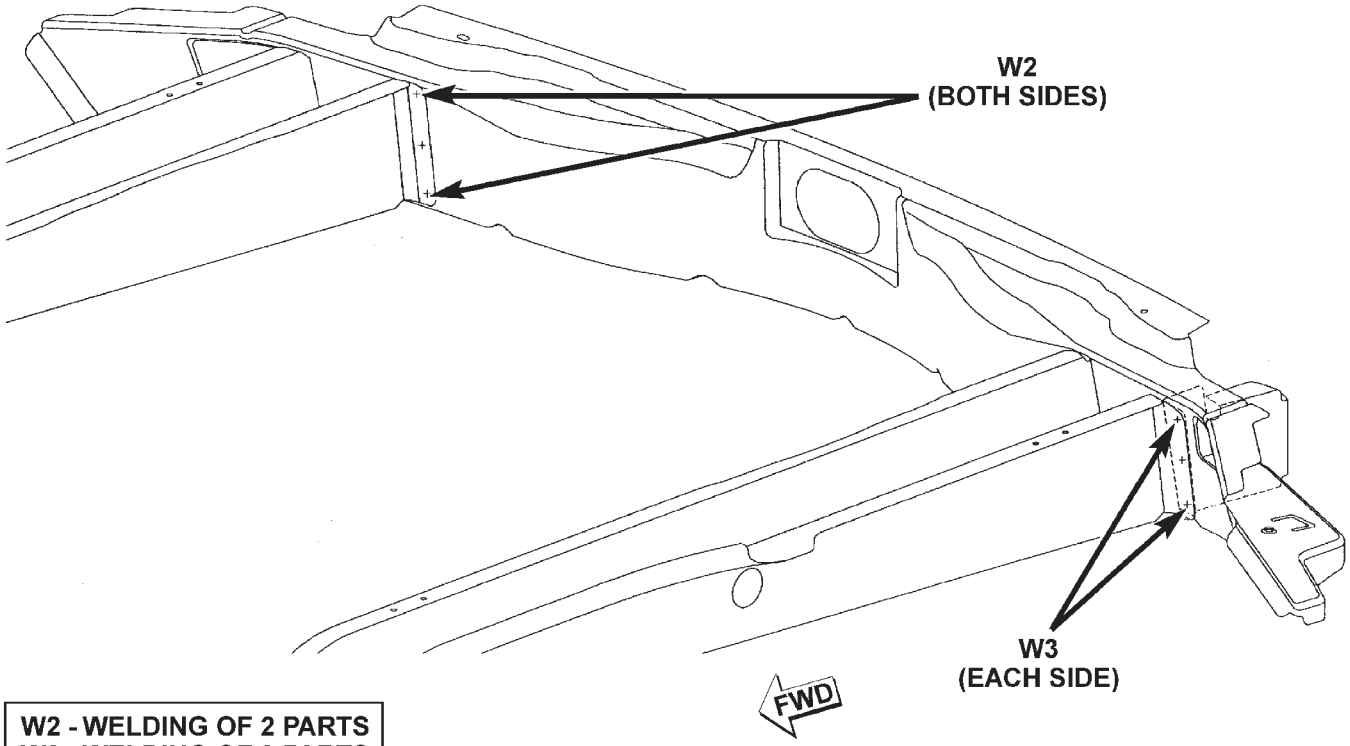

W2 - WELDING OF 2 PARTS
W3 - WELDING OF 3 PARTS
W4 - WELDING OF 4 PARTS

80b6fe38

INNER WHEELHOUSE TO FLOOR PAN

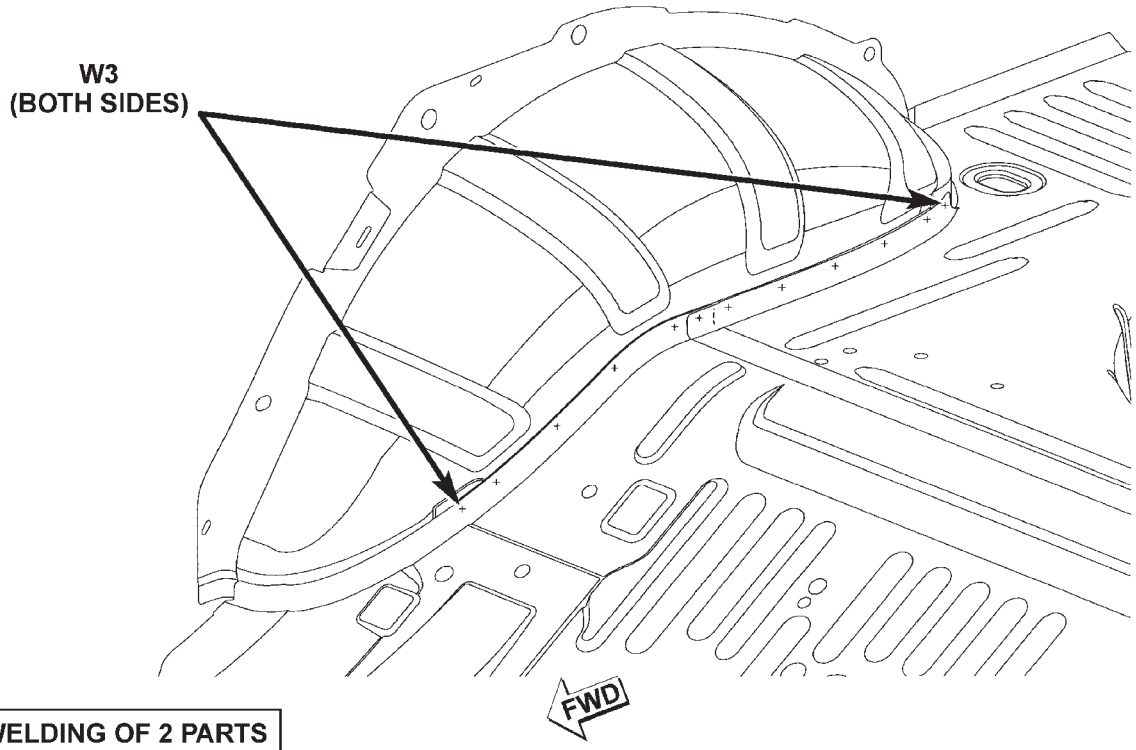

W2 - WELDING OF 2 PARTS
W3 - WELDING OF 3 PARTS
W4 - WELDING OF 4 PARTS

80b6fe39

SPECIFICATIONS (Continued)

INNER WHEELHOUSE TO INNER BODYSIDE APERTURE AND FLOOR PAN

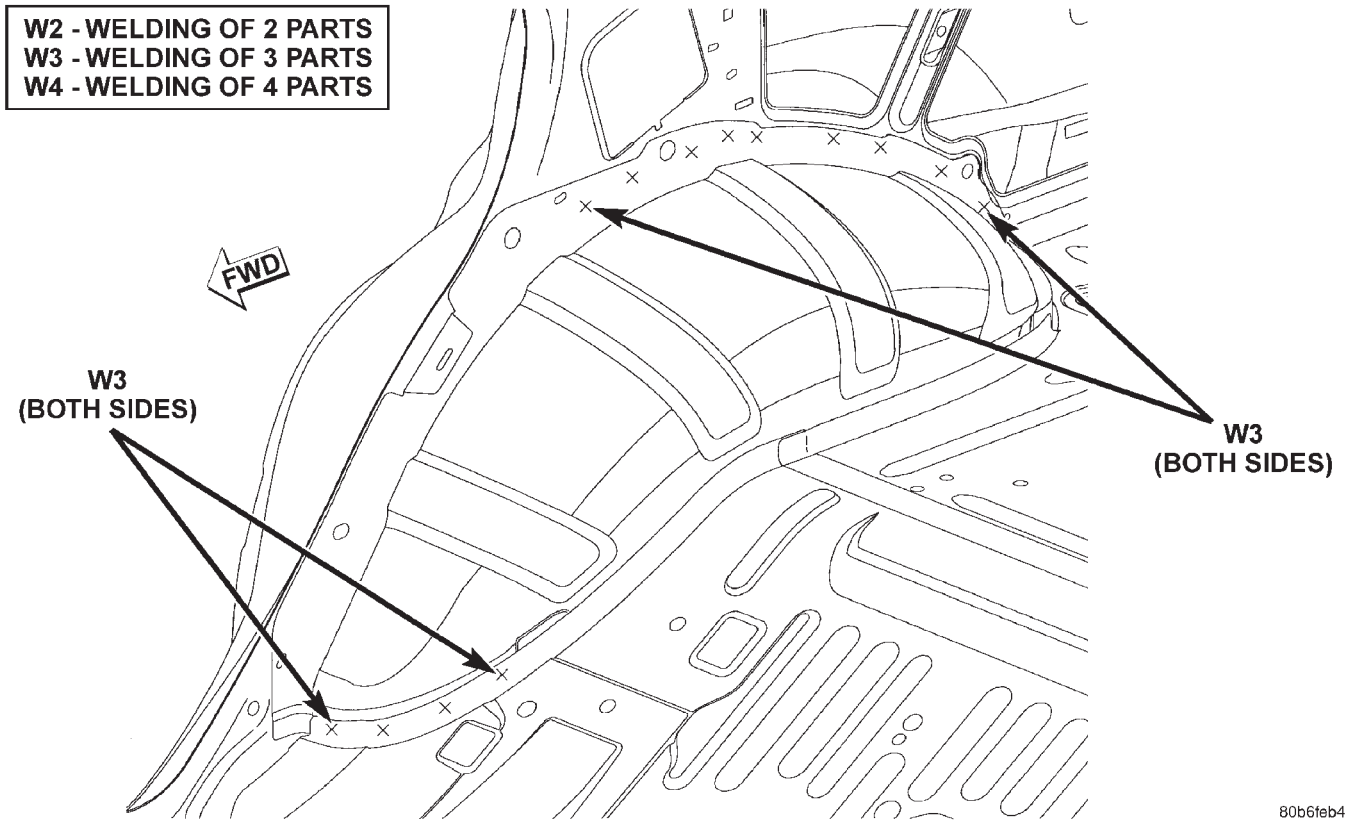

OUTER WHEELHOUSE TO OUTER BODYSIDE APERTURE

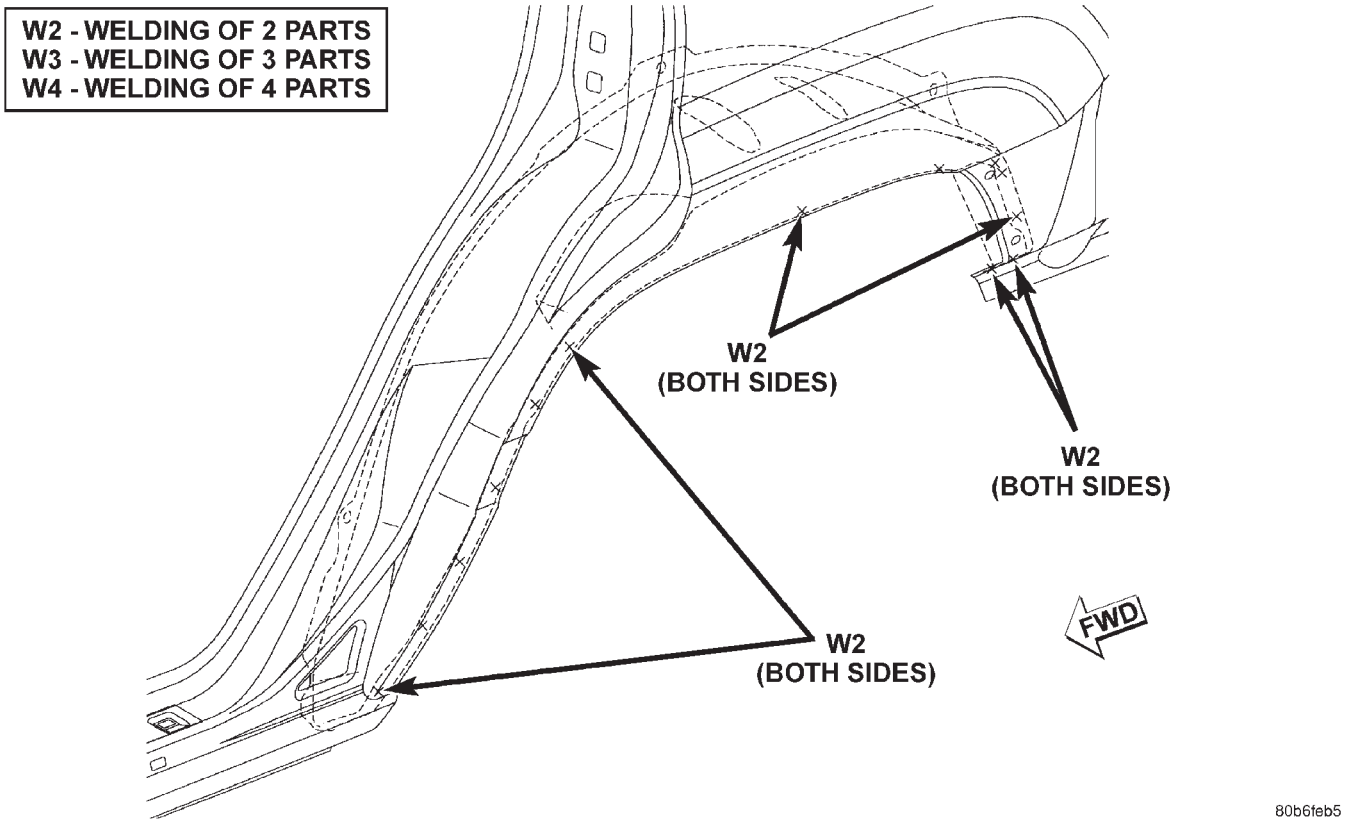

SPECIFICATIONS (Continued)

OUTER WHEELHOUSE TO INNER BODYSIDE APERTURE

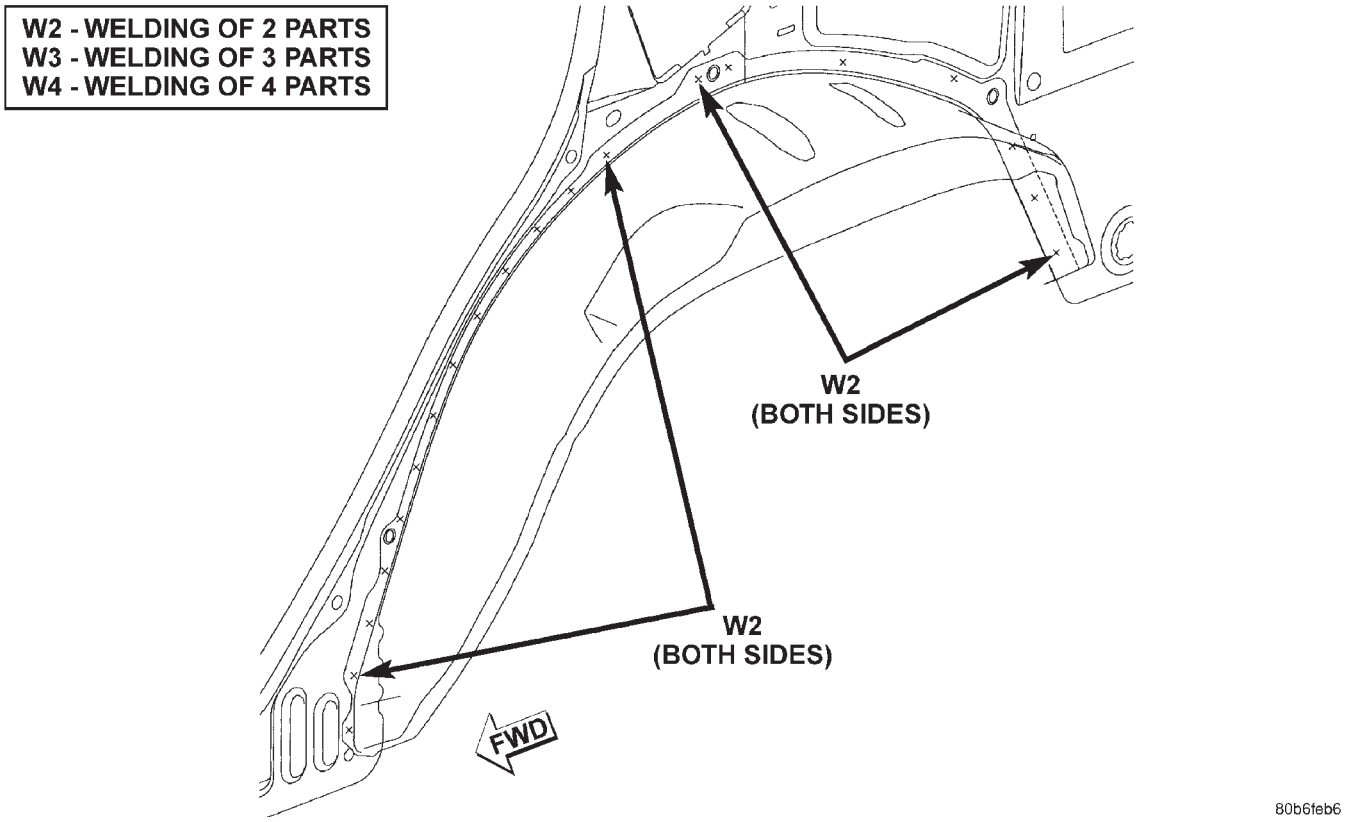

INNER BODYSIDE APERTURE TO OUTER BODYSIDE APERTURE

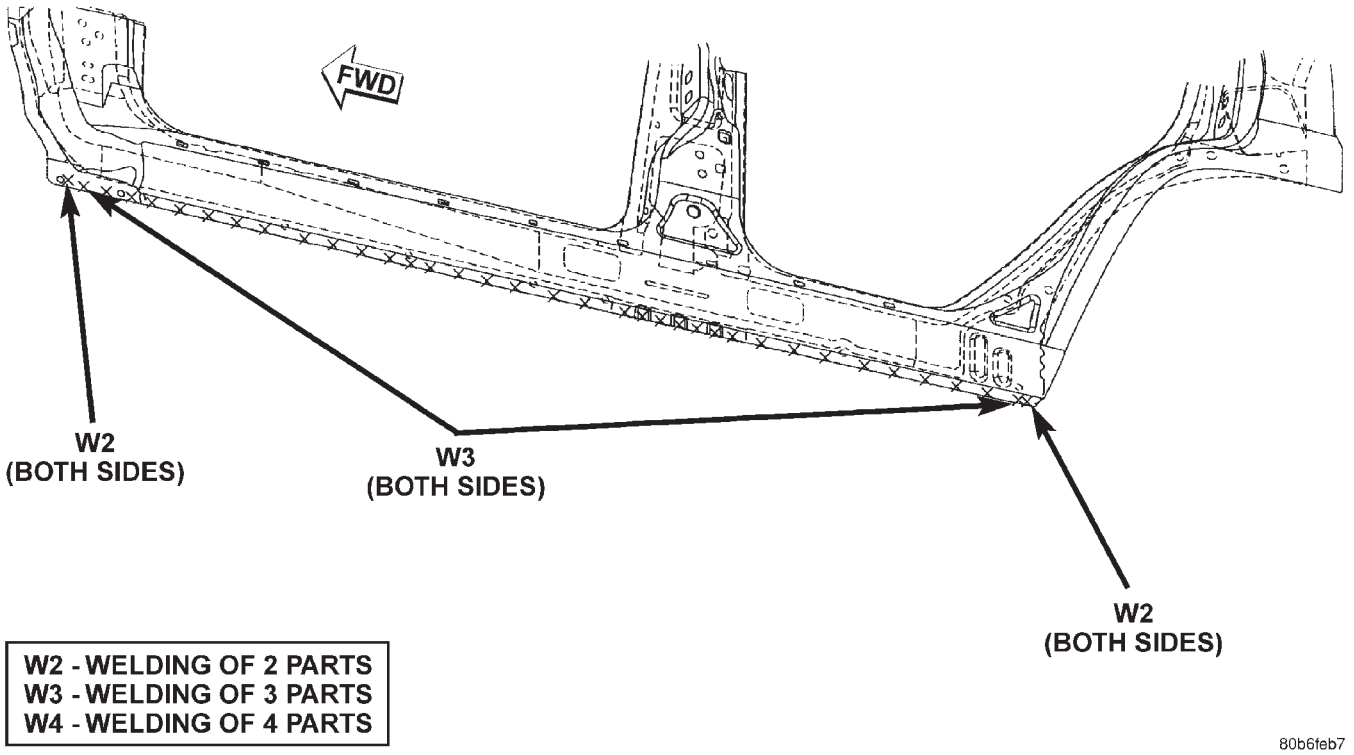

SPECIFICATIONS (Continued)

REAR INBOARD SEAT BELT REINFORCEMENT TO FLOOR PAN

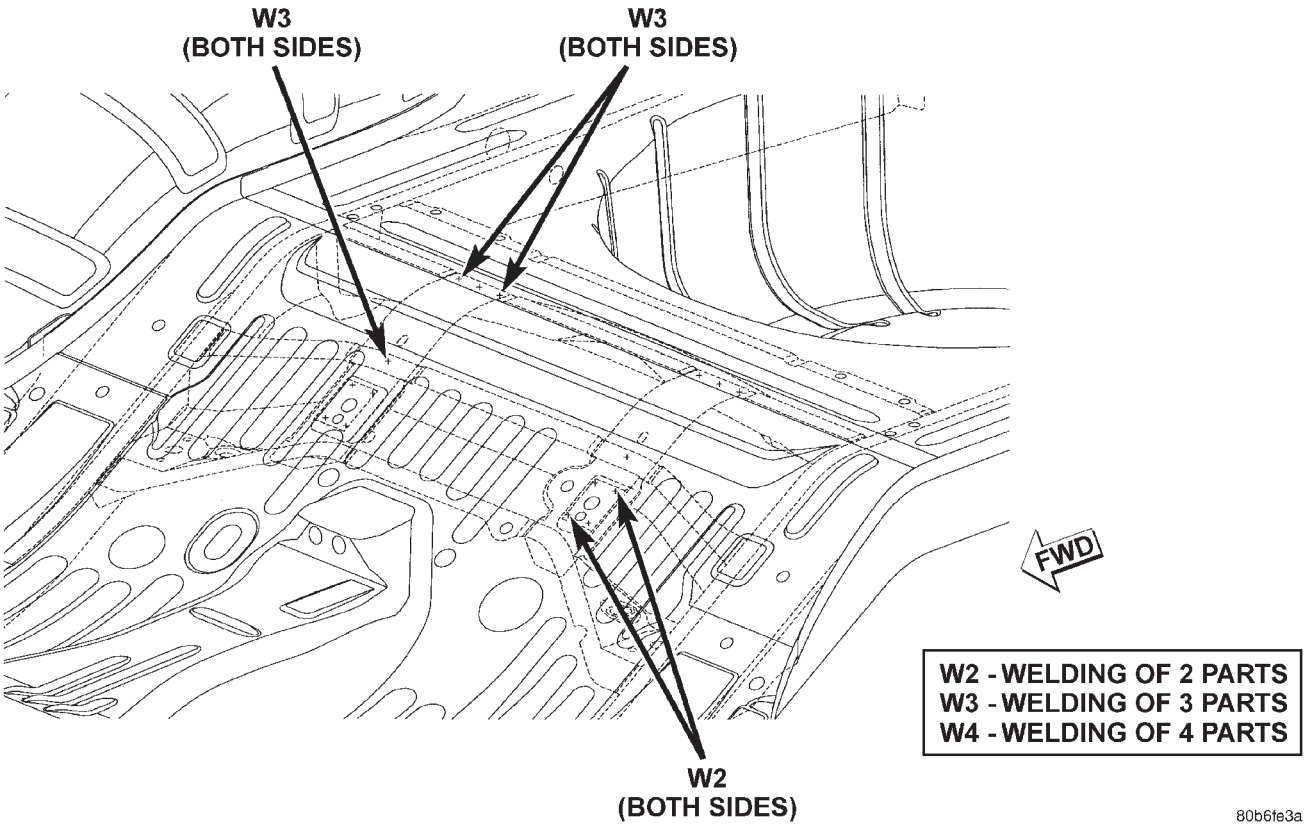

SPECIFICATIONS (Continued)

SEALER LOCATIONS

APPLICATION METHODS

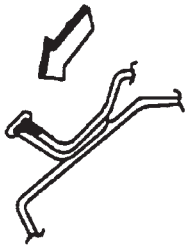

HOLD GUN NOZZLE IN DIRECTION OF ARROW IN ORDER TO EFFECTIVELY SEAL METAL JOINTS.

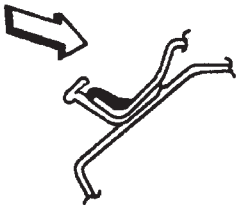

DO NOT HOLD GUN NOZZLE IN DIRECTION OF ARROW. SEALER APPLIED AS SHOWN IN INEFFECTIVE.

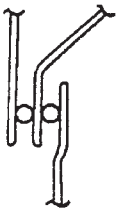

3 METAL THICKNESS

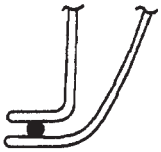

2 METAL THICKNESS

3 METAL THICKNESS

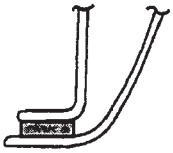

2 METAL THICKNESS

SYMBOLS

	THUMBGRADEABLE SEALER
	EXTRUDABLE THERMOPLASTIC
	EXPOSED THERMOPLASTIC SEALANT
zzzzzzzz	HIDDEN SEALANT

80b62b1b

SPECIFICATIONS (Continued)

COWL PLENUM AND DASH PANEL

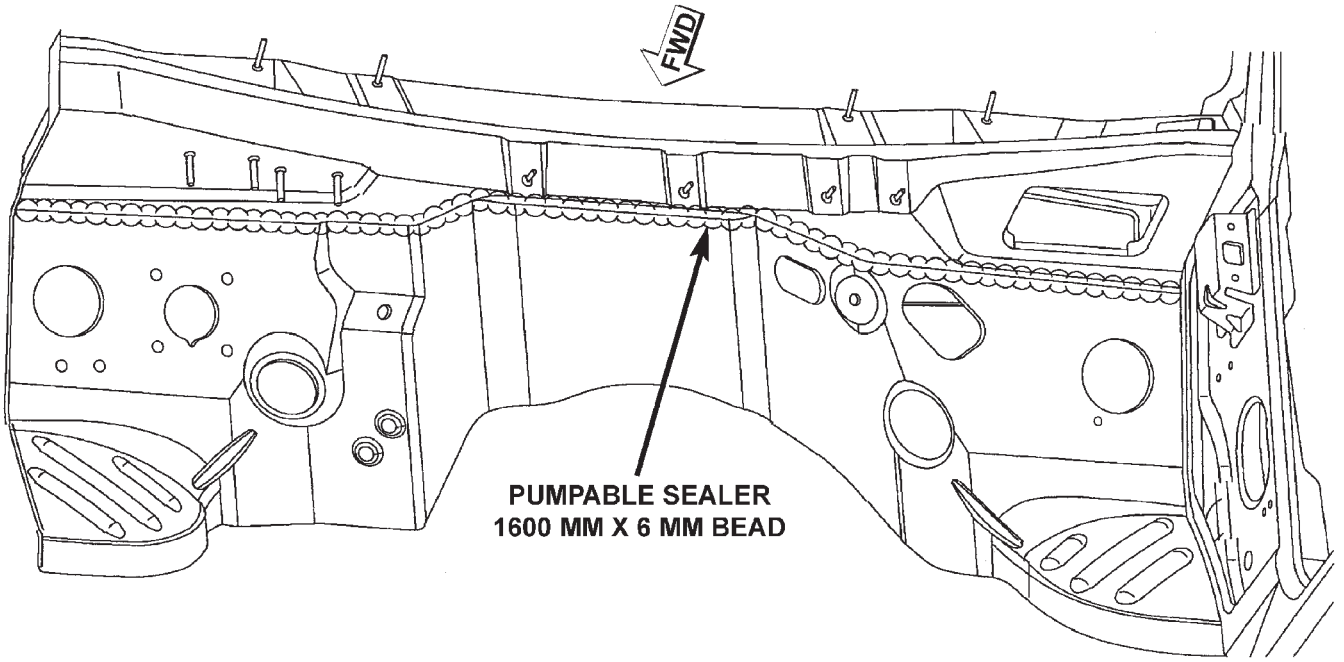

80b6fe1a

SPECIFICATIONS (Continued)

DASH, COWL AND PLENUM

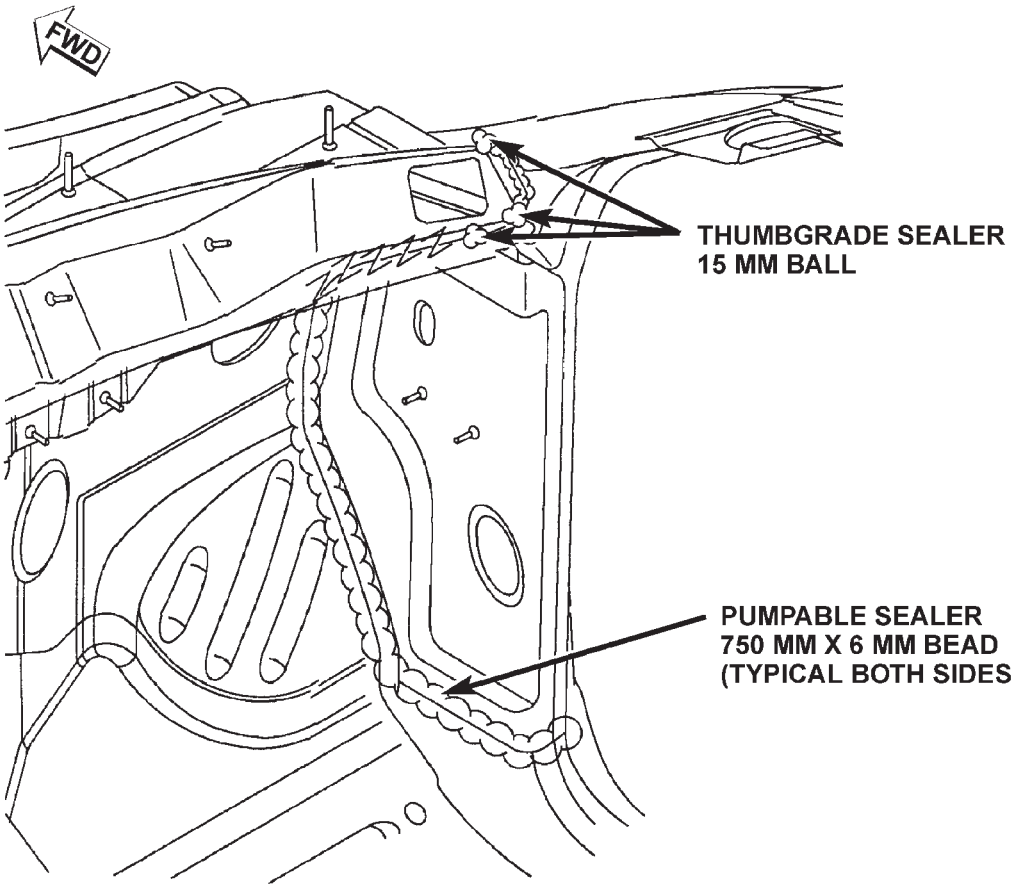

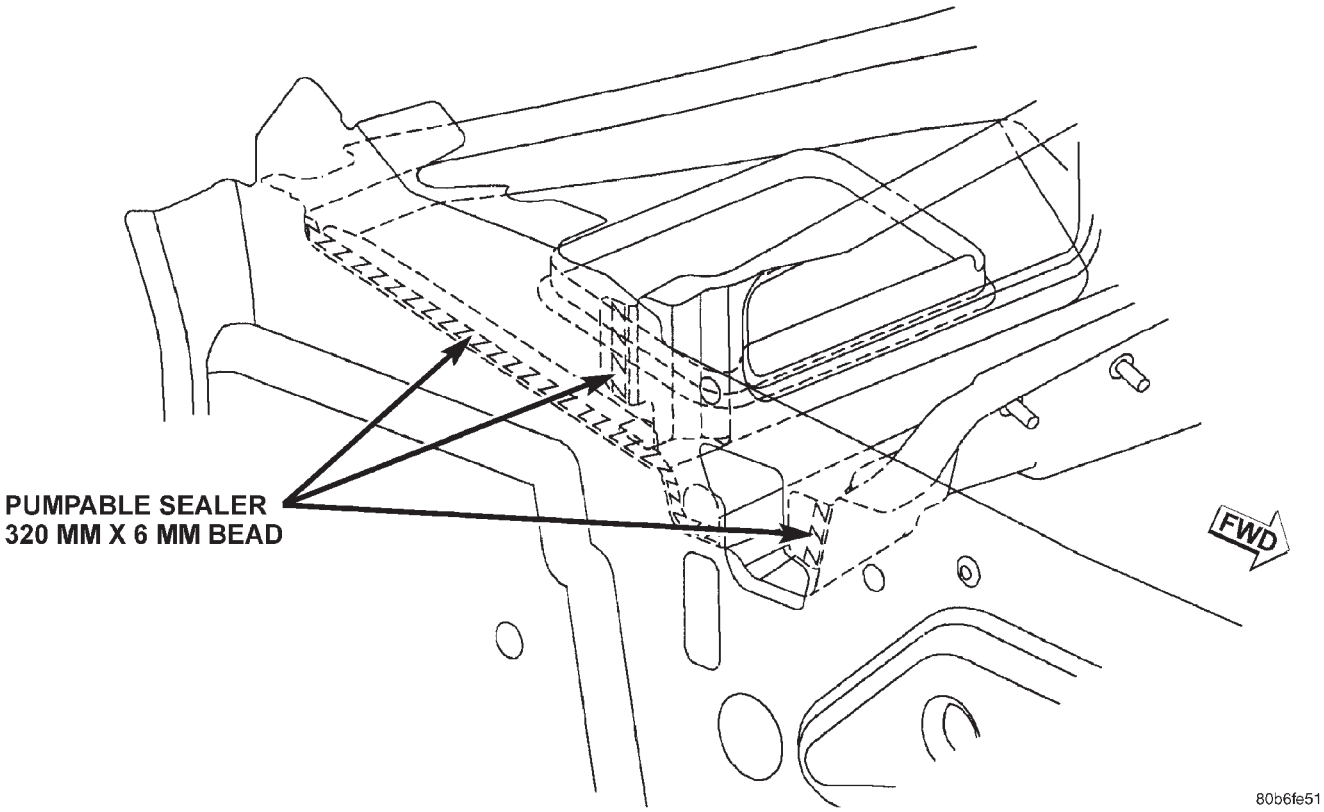

SPECIFICATIONS (Continued)

INNER FENDER AND COWL

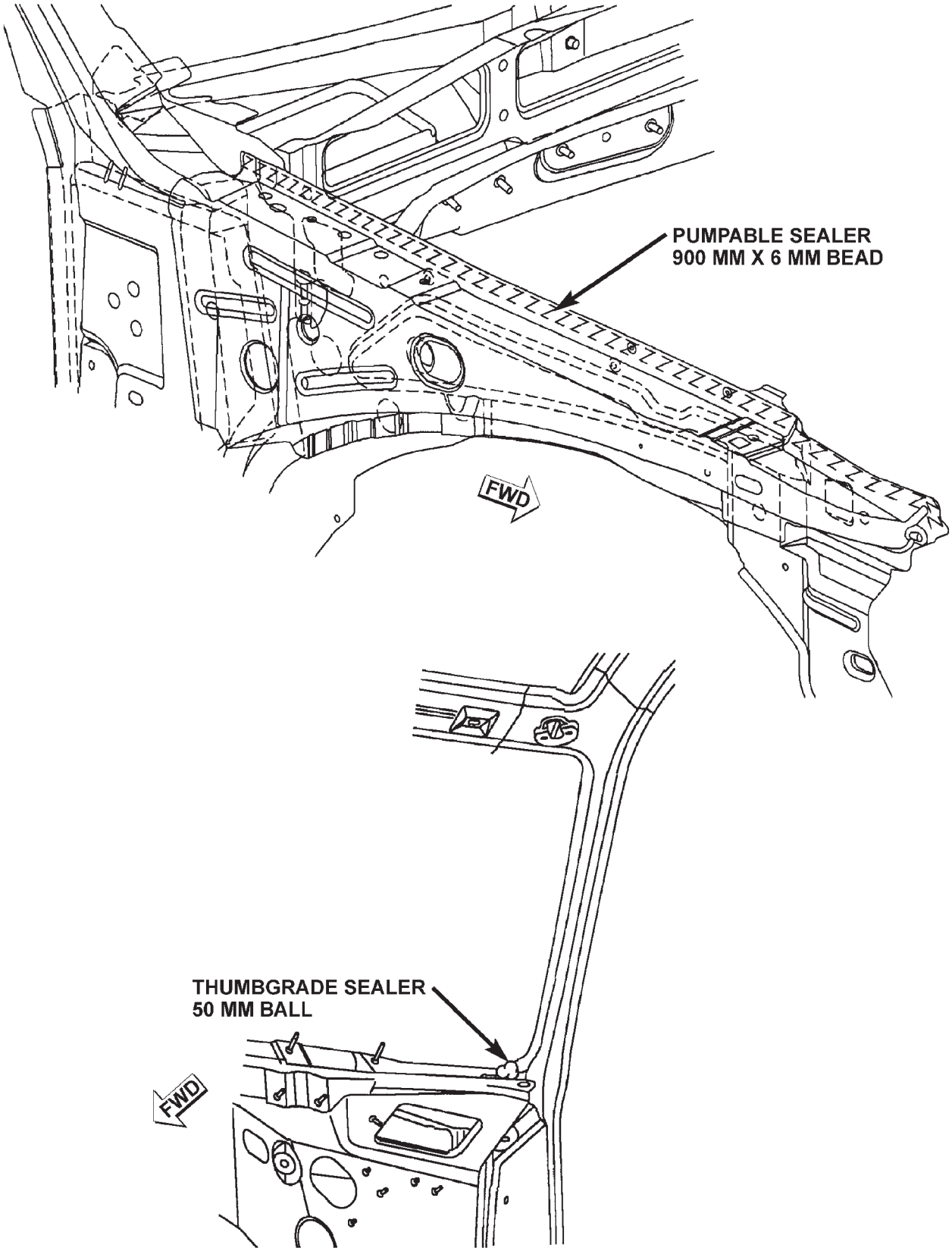

80b6fe50

SPECIFICATIONS (Continued)

LOWER PLENUM AND BAFFLE

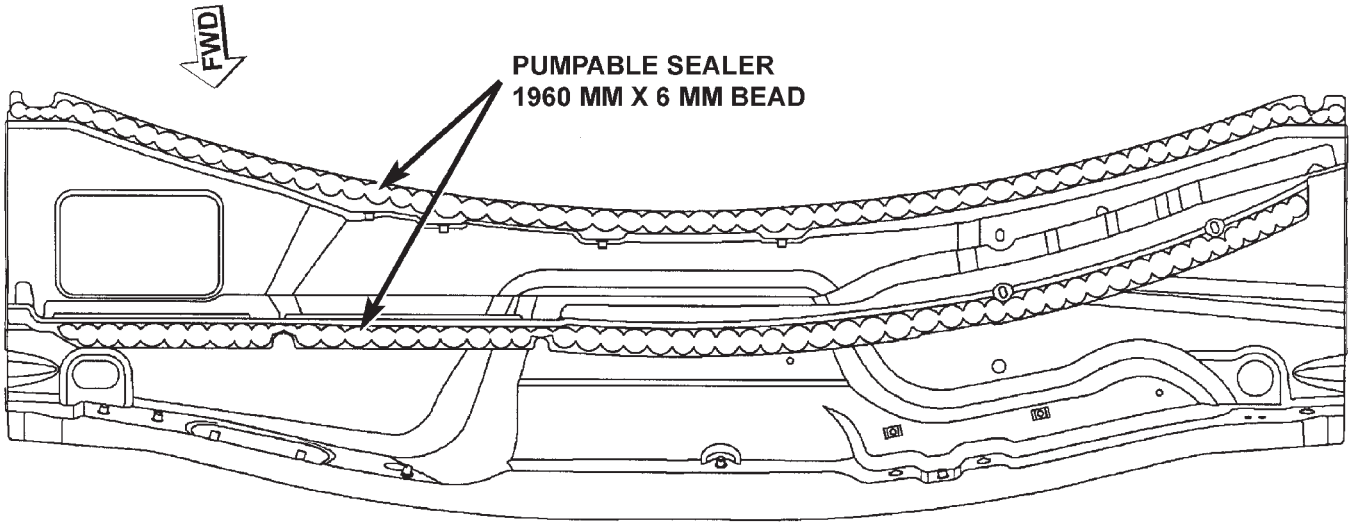

APPLY TO PLENUM LOWER REAR FLANGE
AND PLENUM BAFFLE FLANGE.

80b6fe1b

A-PILLAR

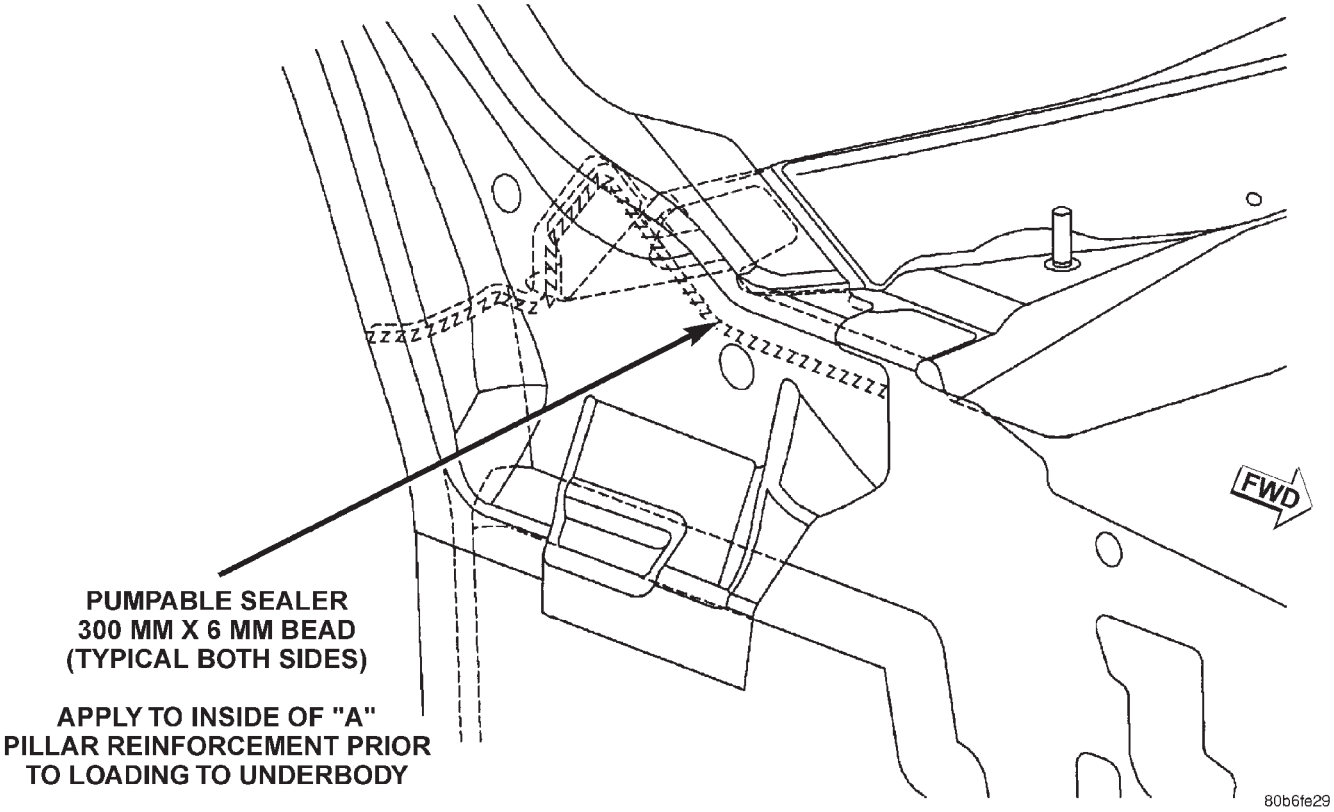

80b6fe29

SPECIFICATIONS (Continued)

COWL SIDE ATTACHMENT

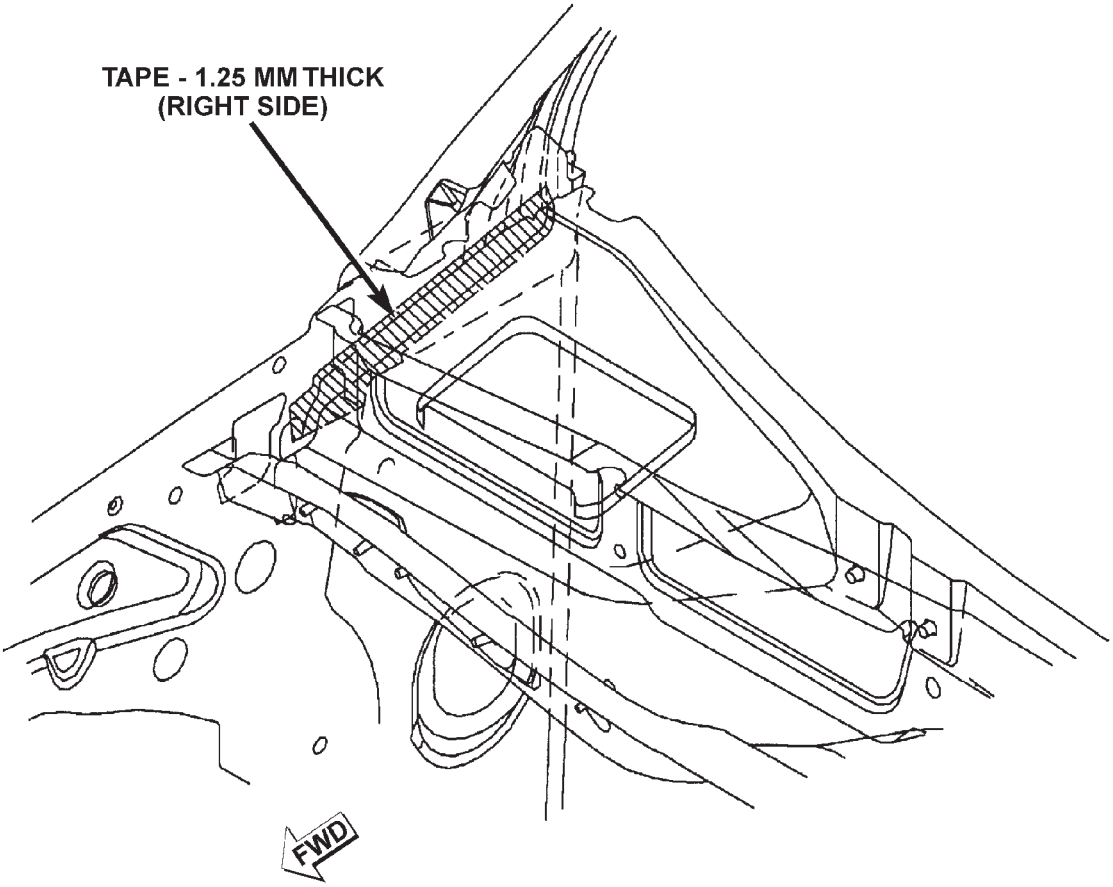

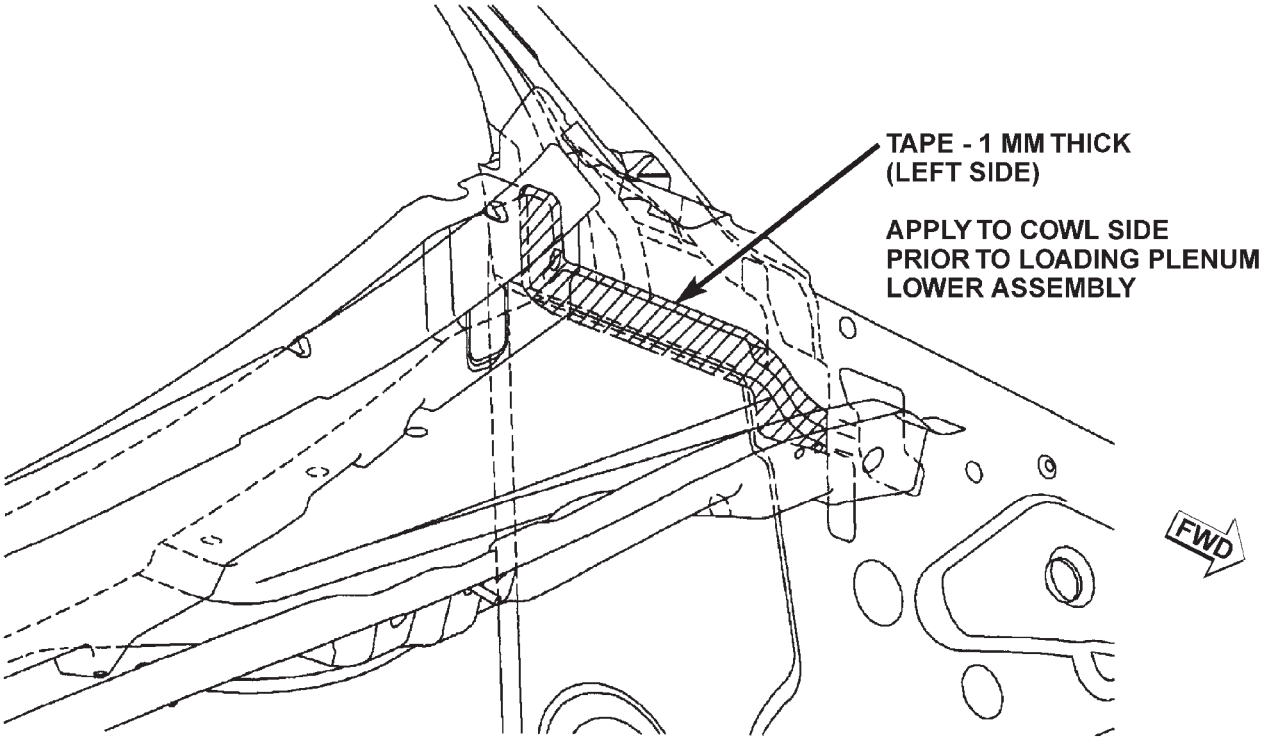

80b6fe2a

SPECIFICATIONS (Continued)

BODYSIDE ATTACHMENT

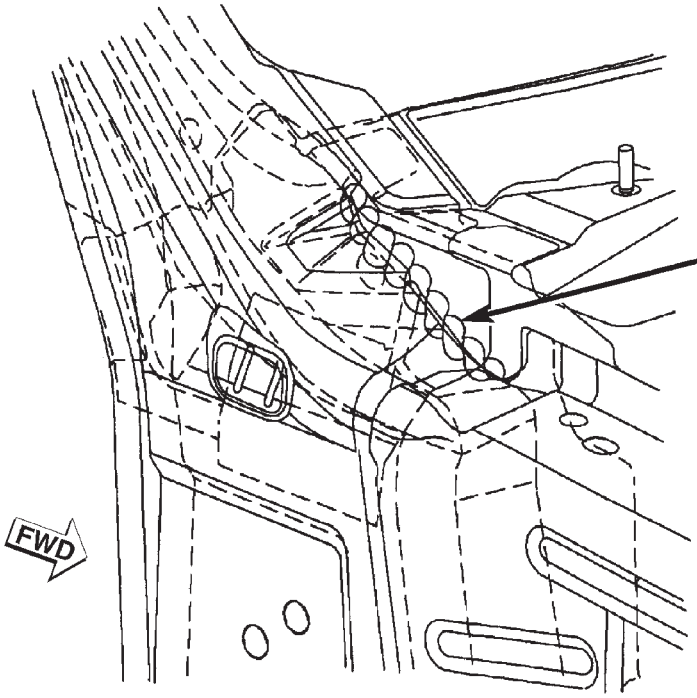

THUMBGRADE ROPE
150 MM X 9 MM BALL
(TYPICAL BOTH SIDES)

APPLY TO BODYSIDE ASSEMBLY PRIOR TO SPRAY SEALER APPLICATION

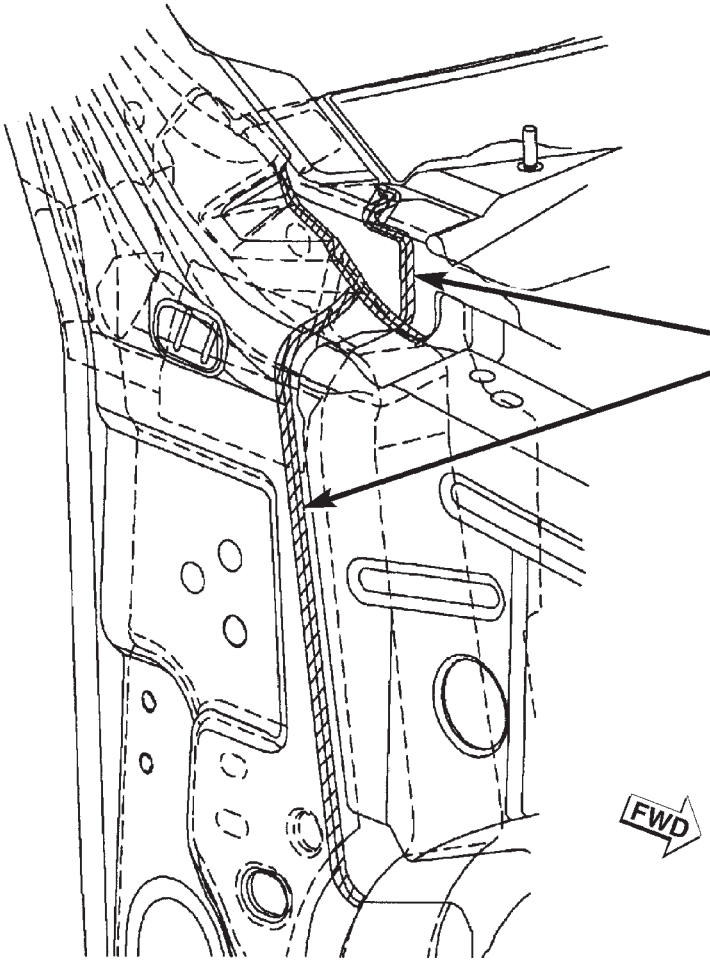

SPRAYABLE ADHESIVE
(TYPICAL BOTH SIDES)

APPLY AFTER MIG WELDS BUT PRIOR TO FENDER INSTALLATION

80b6fe28

SPECIFICATIONS (Continued)

BODYSIDE INNER AND OUTER TO COWL

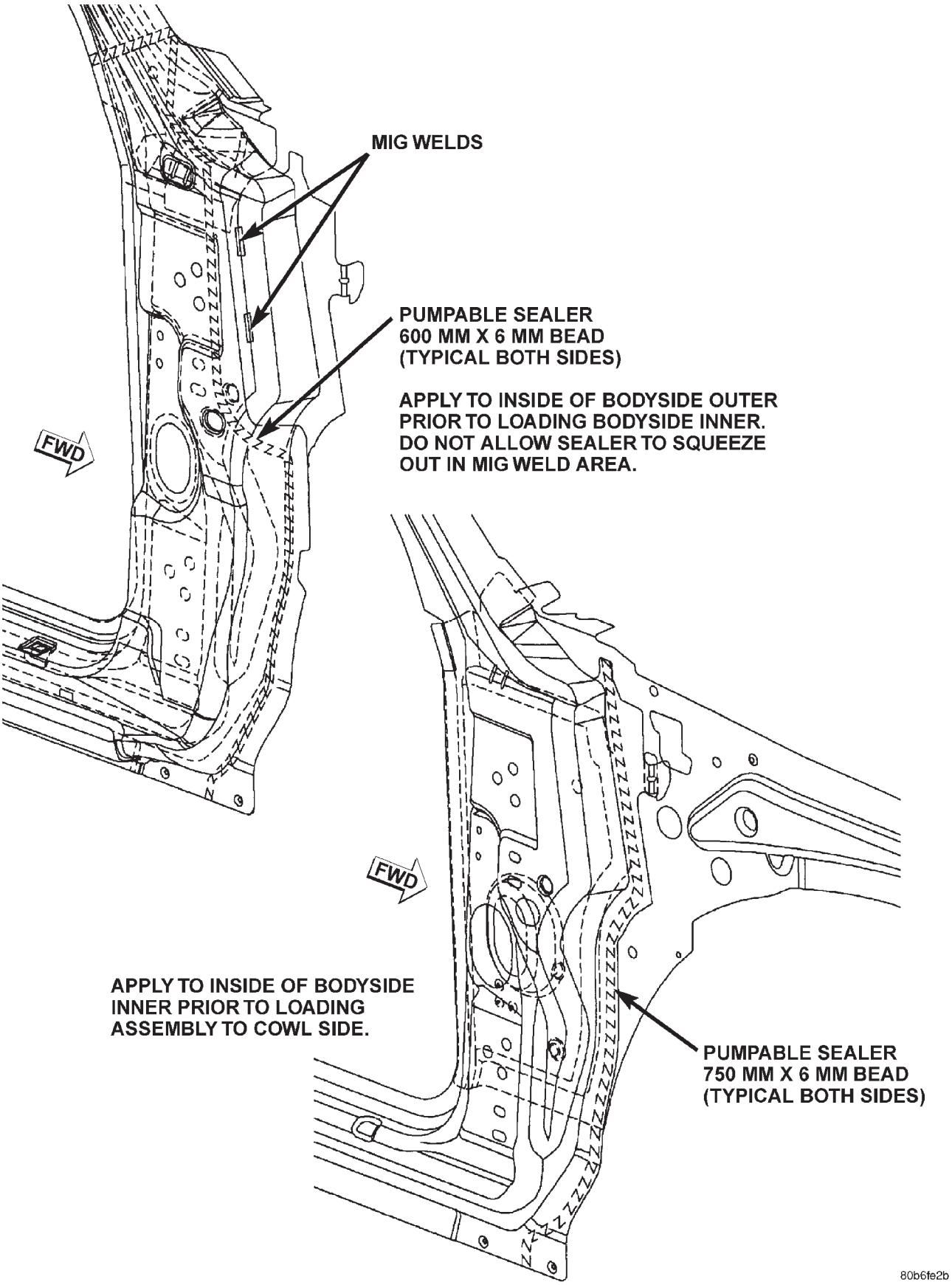

SPECIFICATIONS (Continued)

FENDER ATTACHMENT

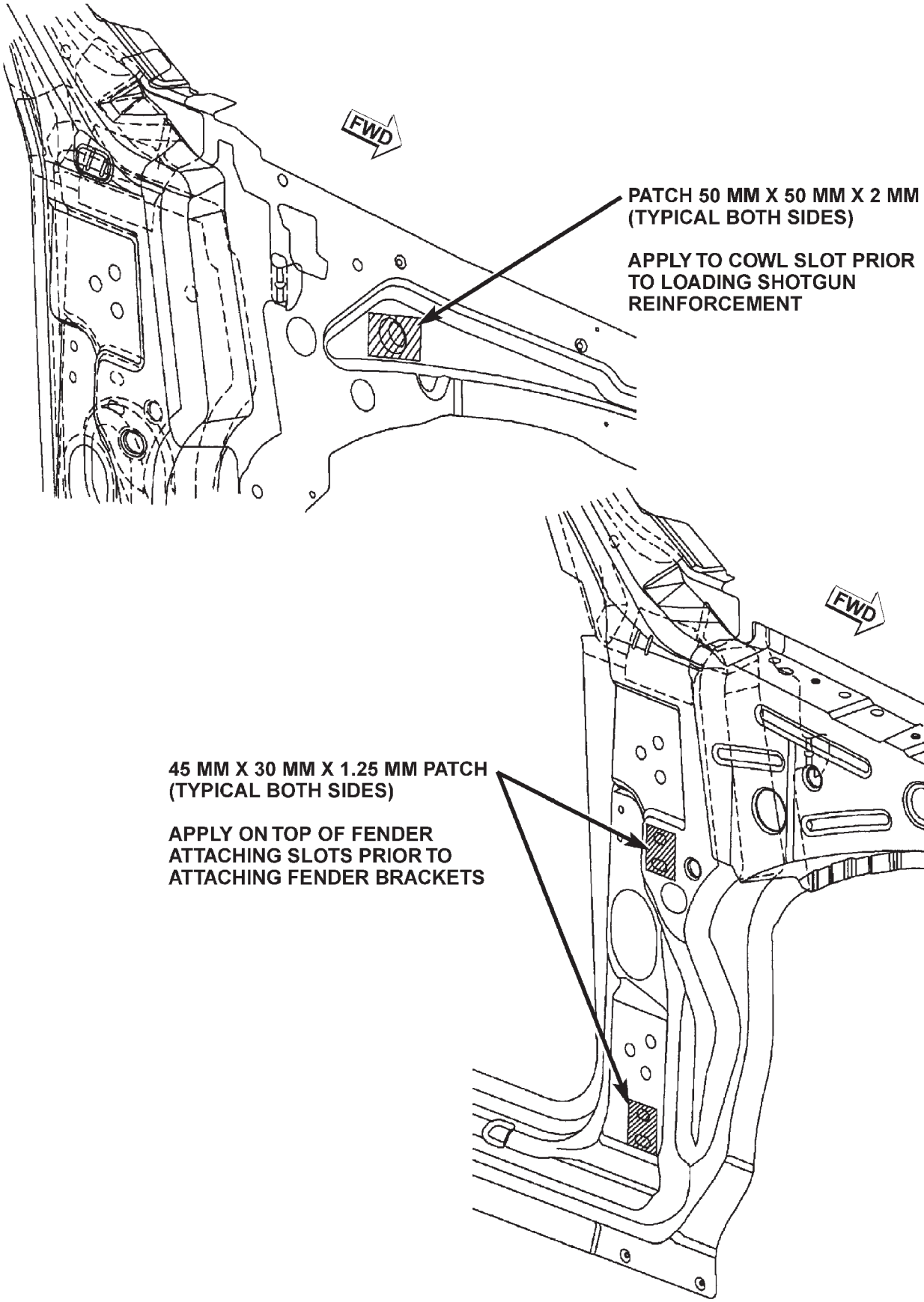

SPECIFICATIONS (Continued)

DOOR HINGE BOLT HOLES

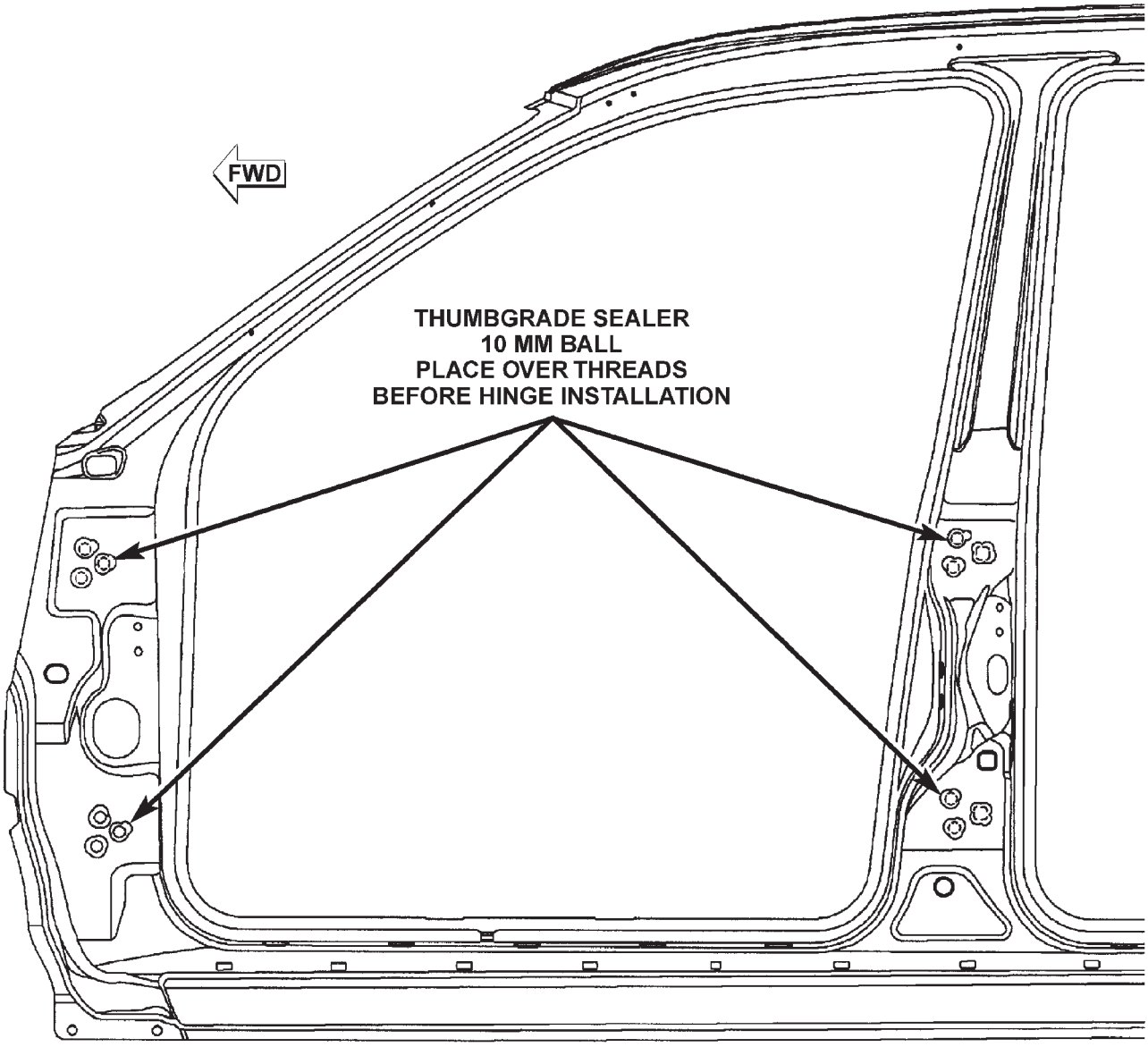

80b6fe1f

SPECIFICATIONS (Continued)

A-PILLAR AND B-PILLAR HINGE AREA

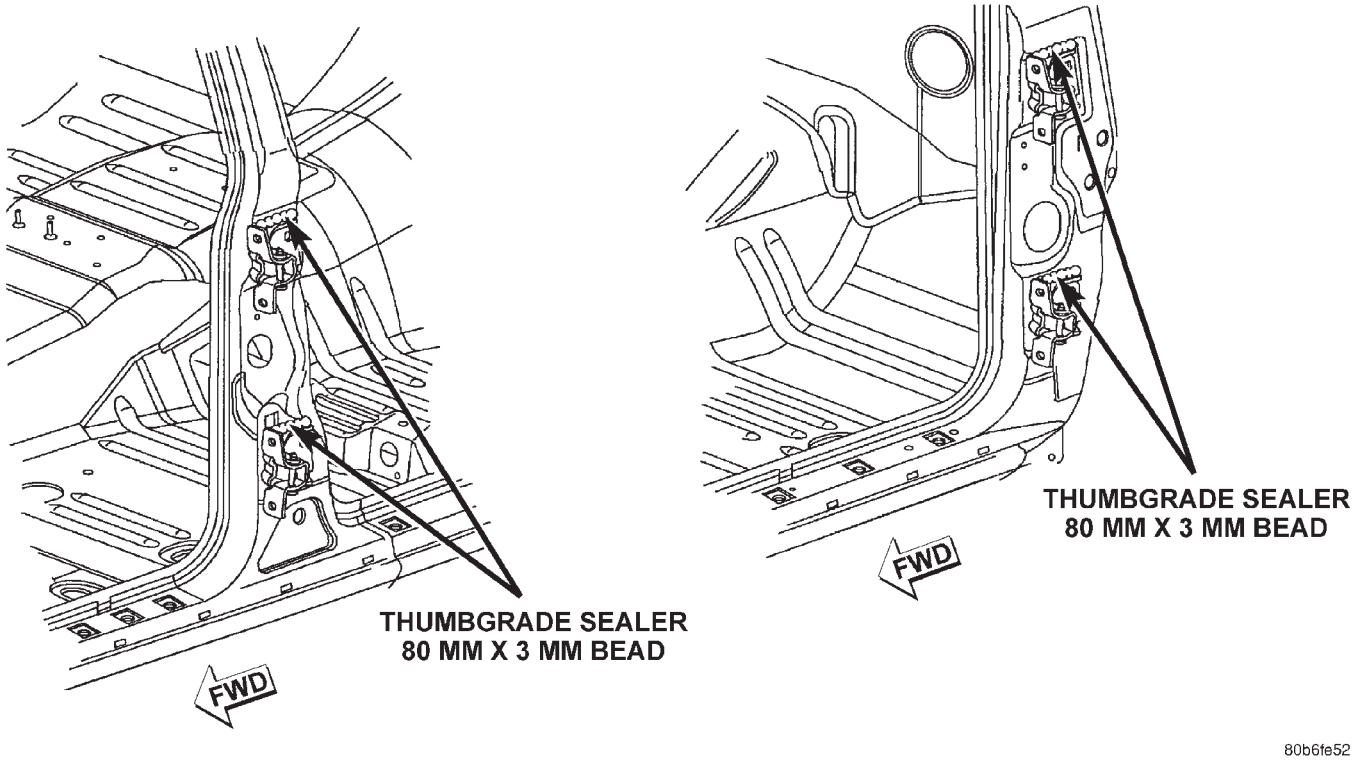

SPECIFICATIONS (Continued)

B-PILLAR AND SILL

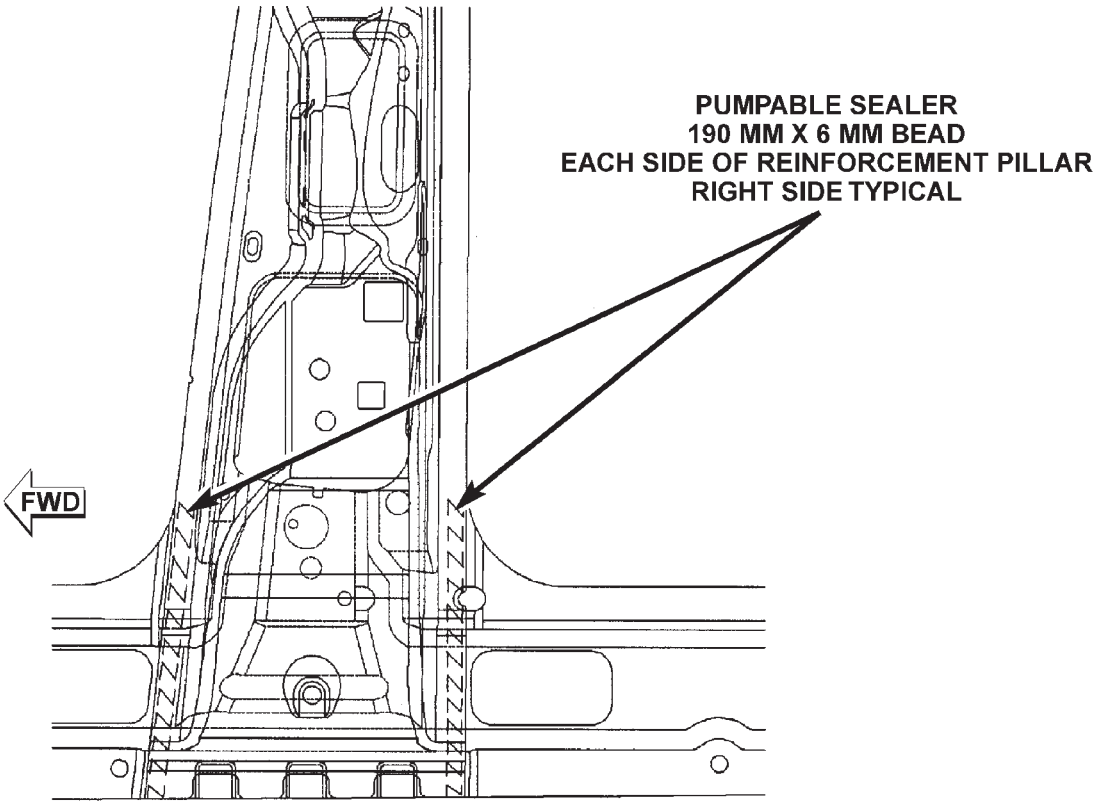

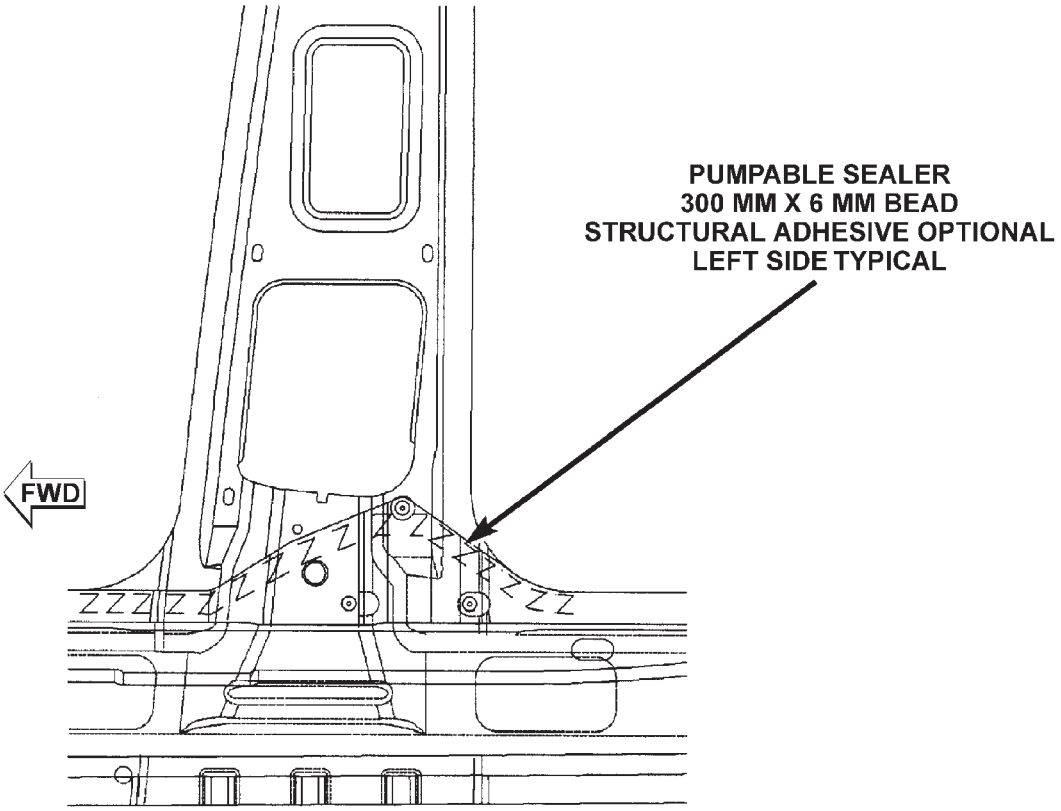

80b6fe20

SPECIFICATIONS (Continued)

SILL AND B-PILLAR

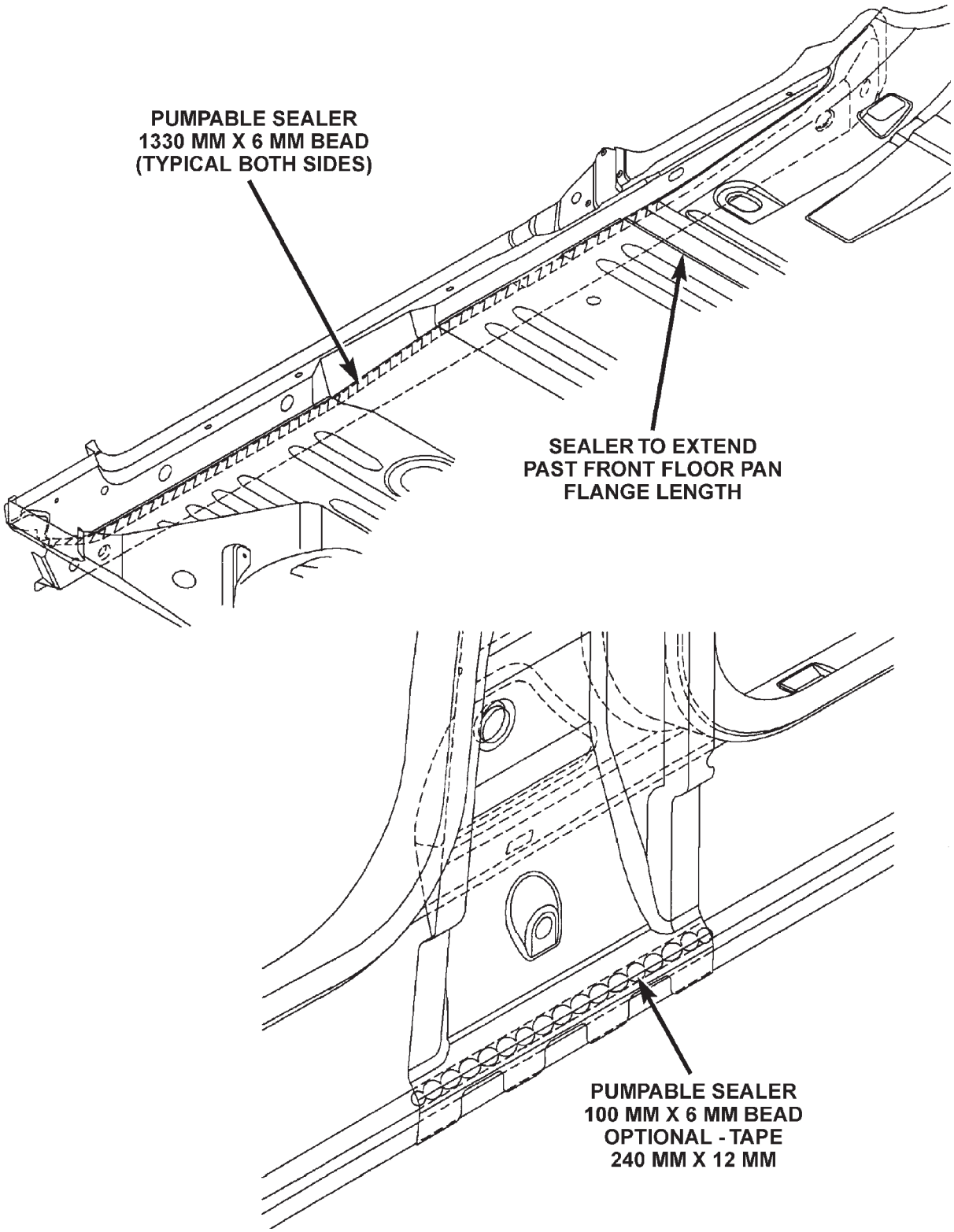

80b6fe53

SPECIFICATIONS (Continued)

BODYSIDE APERTURE AND REAR WHEELHOUSE

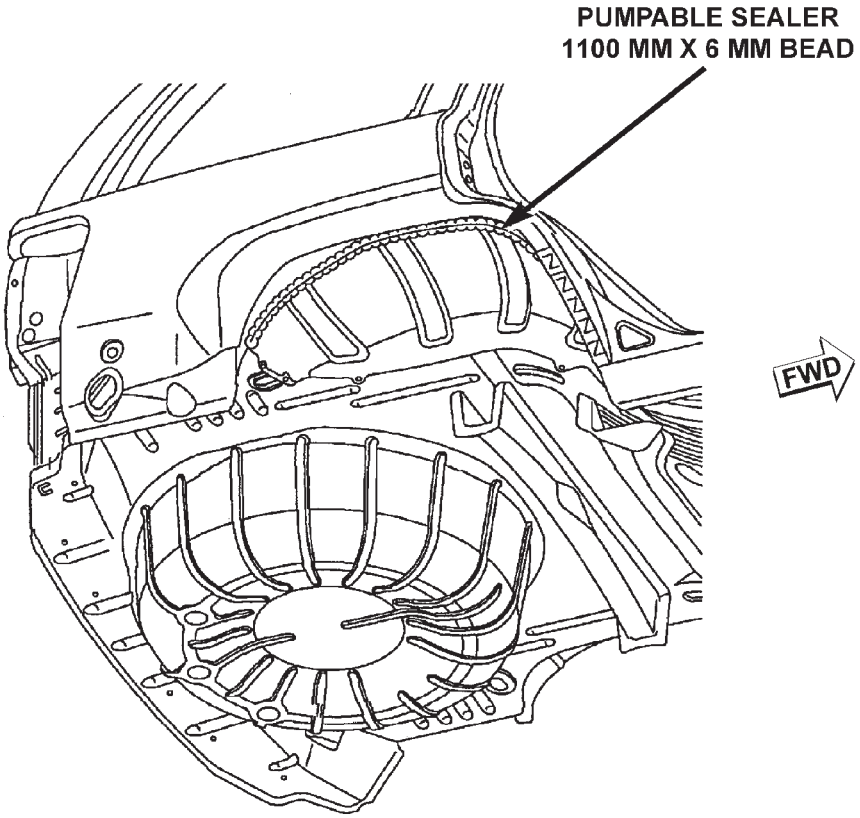

80b6fe21

FUEL FILLER GUSSET

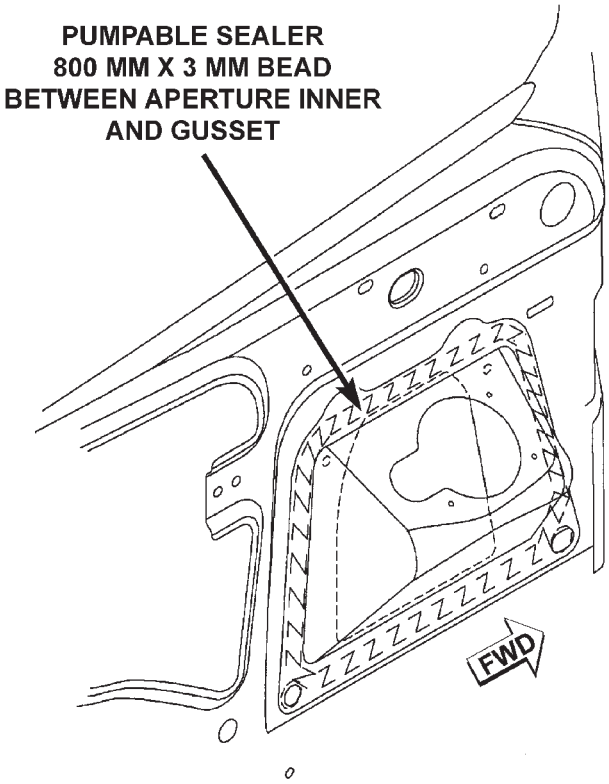

80b6fe24

SPECIFICATIONS (Continued)

OUTER WHEELHOUSE FLANGE

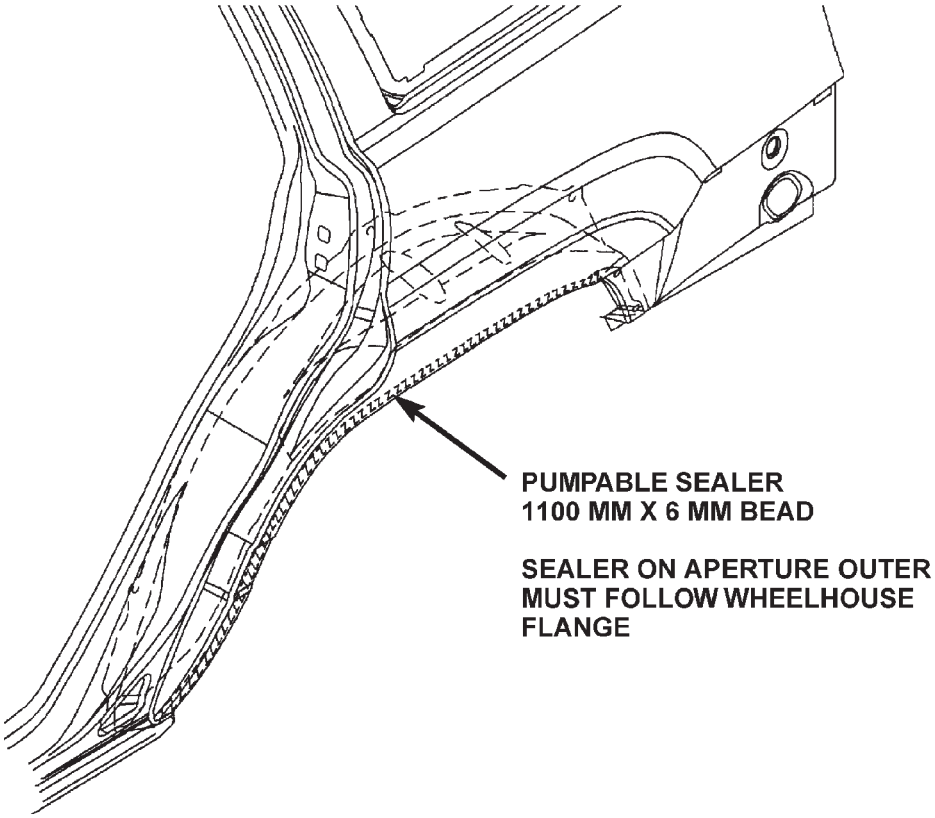

LIFTGATE OPENING

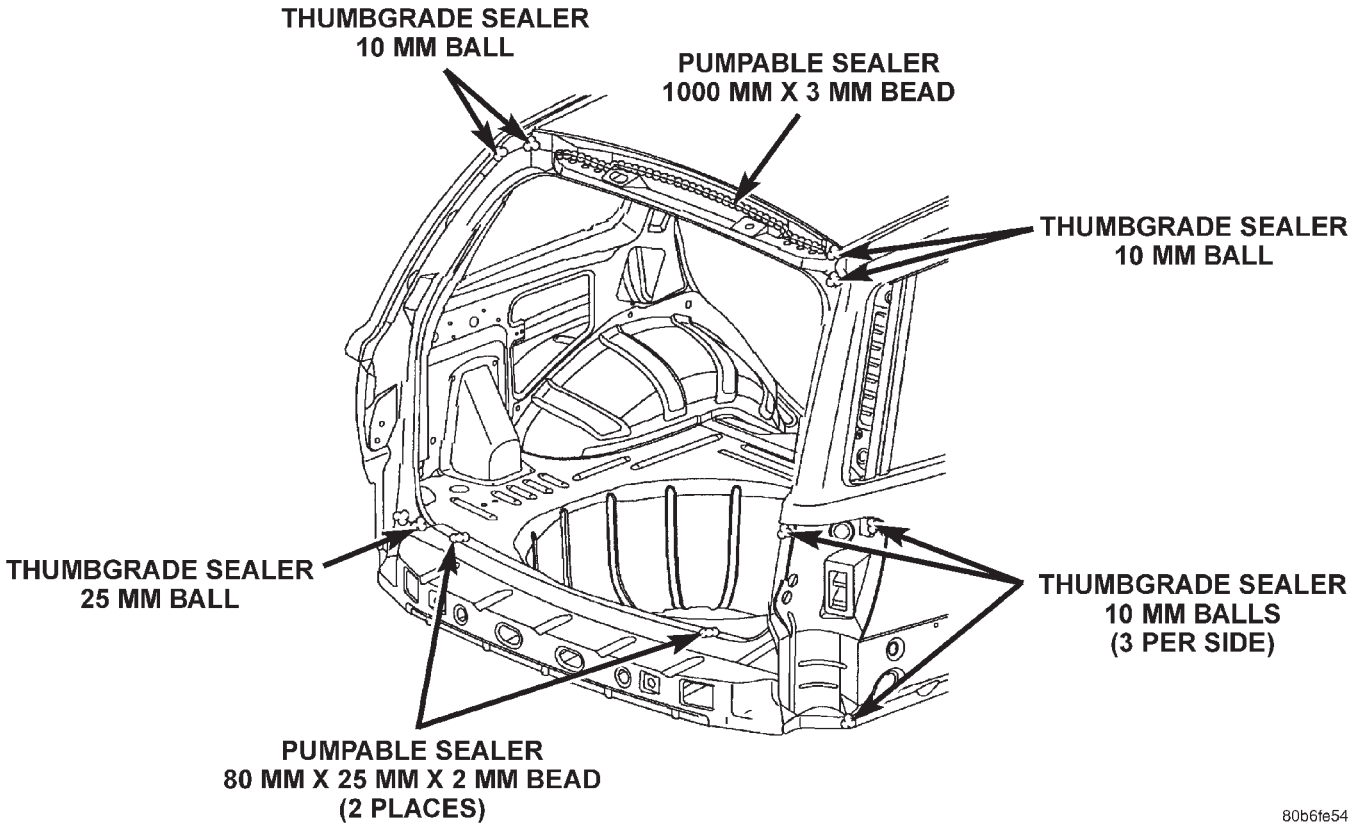

SPECIFICATIONS (Continued)

INNER WHEELHOUSE FLANGE TO BODYSIDE APERTURE

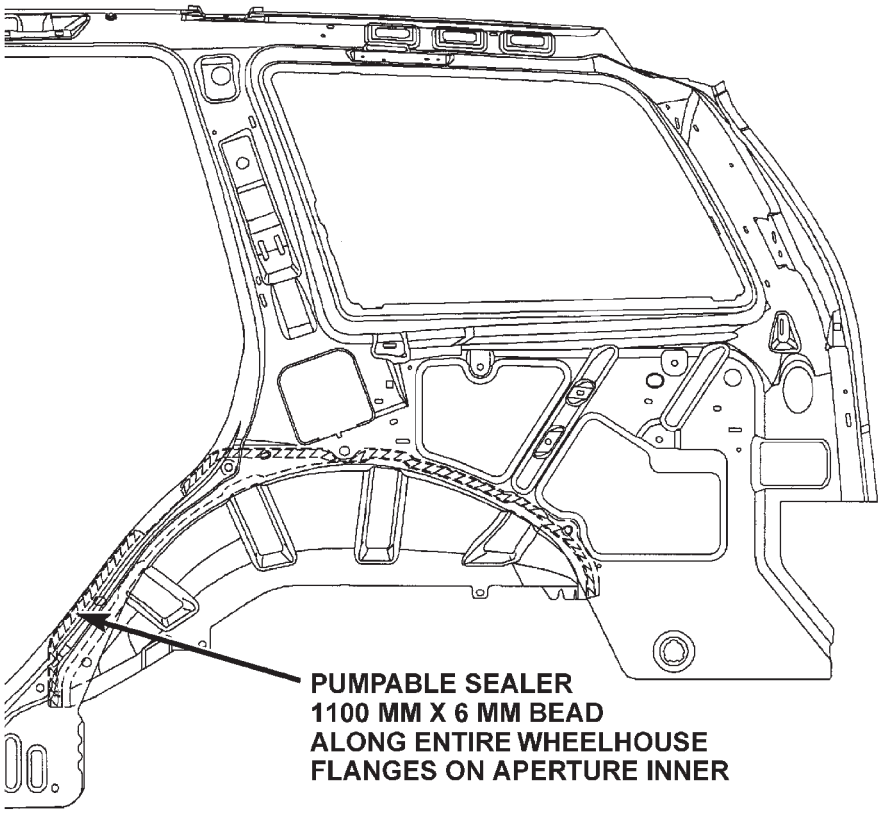

80b6fe56

WHEELHOUSE LOWER

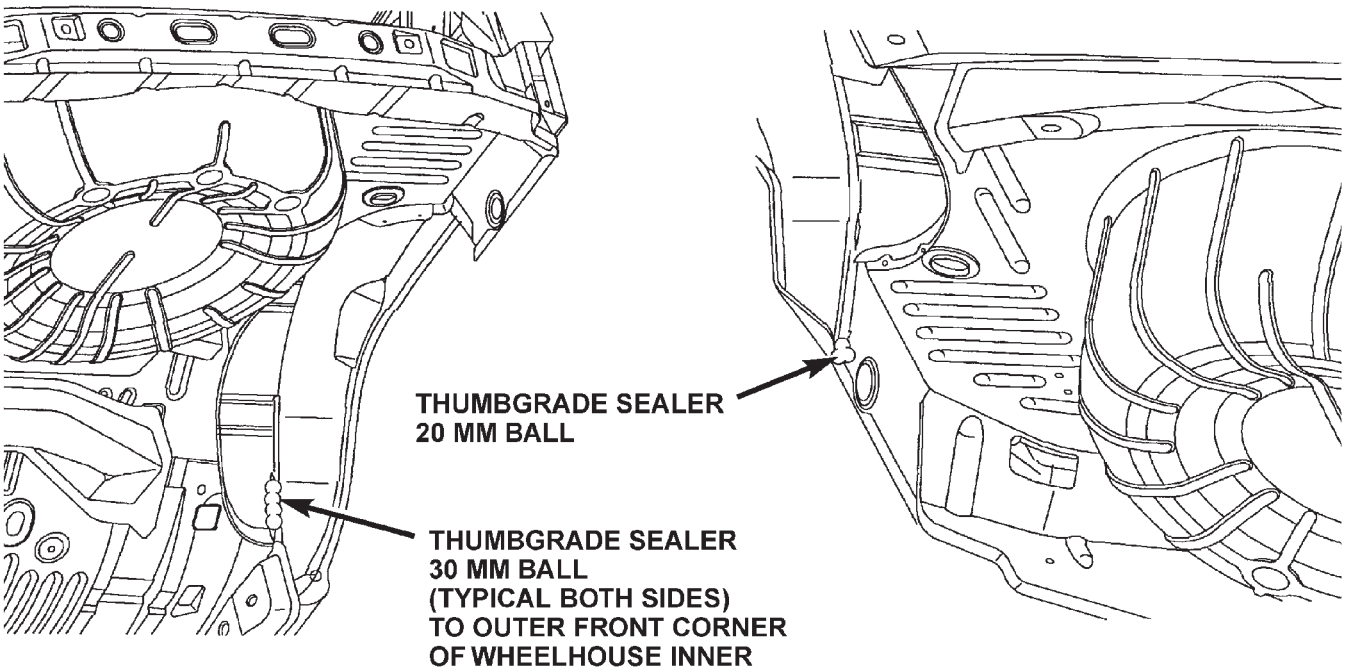

80b6fe57

SPECIFICATIONS (Continued)

REAR INNER CROSSMEMBER

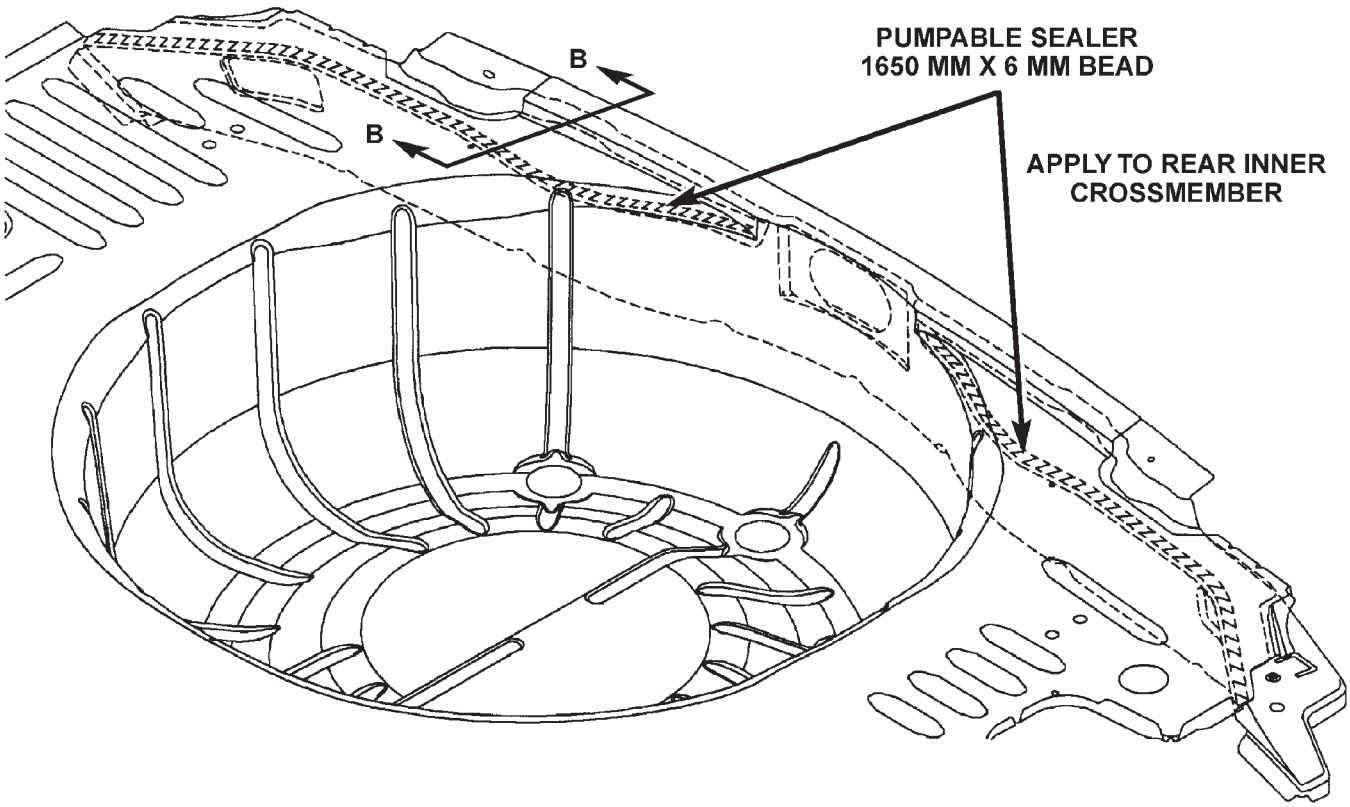

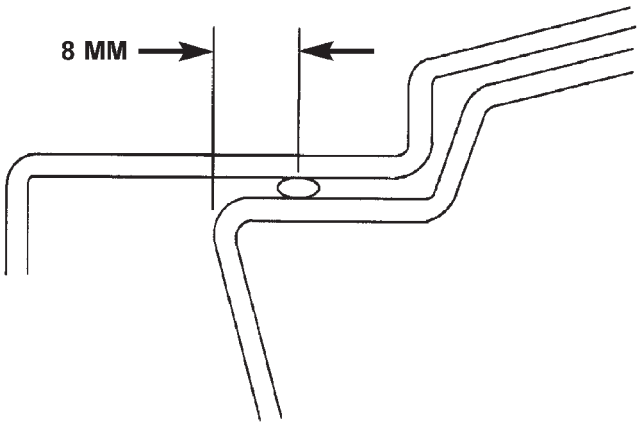

SECTION B - B

℄ OF SEALER BEAD
TO BE APPROXIMATELY 8 MM
REARWARD OF FRONT EDGE
OF REAR INNER CROSSMEMBER

80b6fe58

SPECIFICATIONS (Continued)

ROOF TO BODY SIDE APERTURE

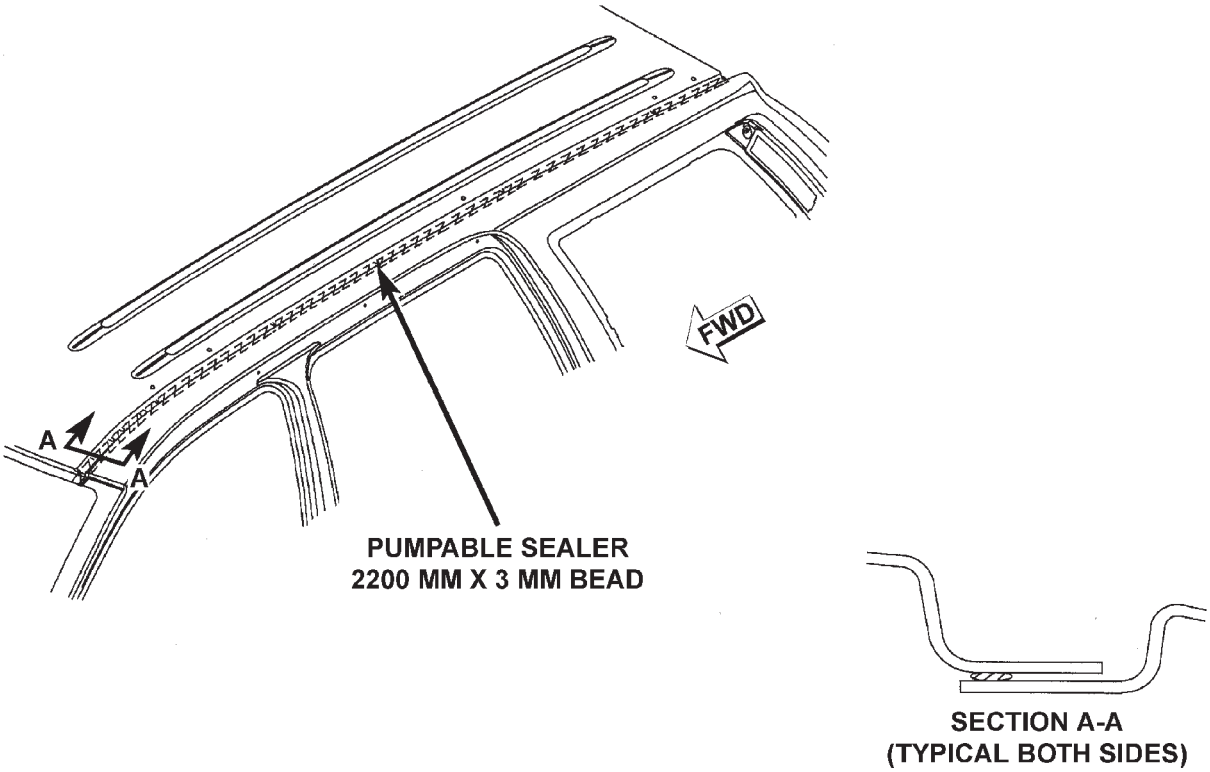

80b6fe25

STRUCTURAL ADHESIVE LOCATIONS

COWL PLENUM

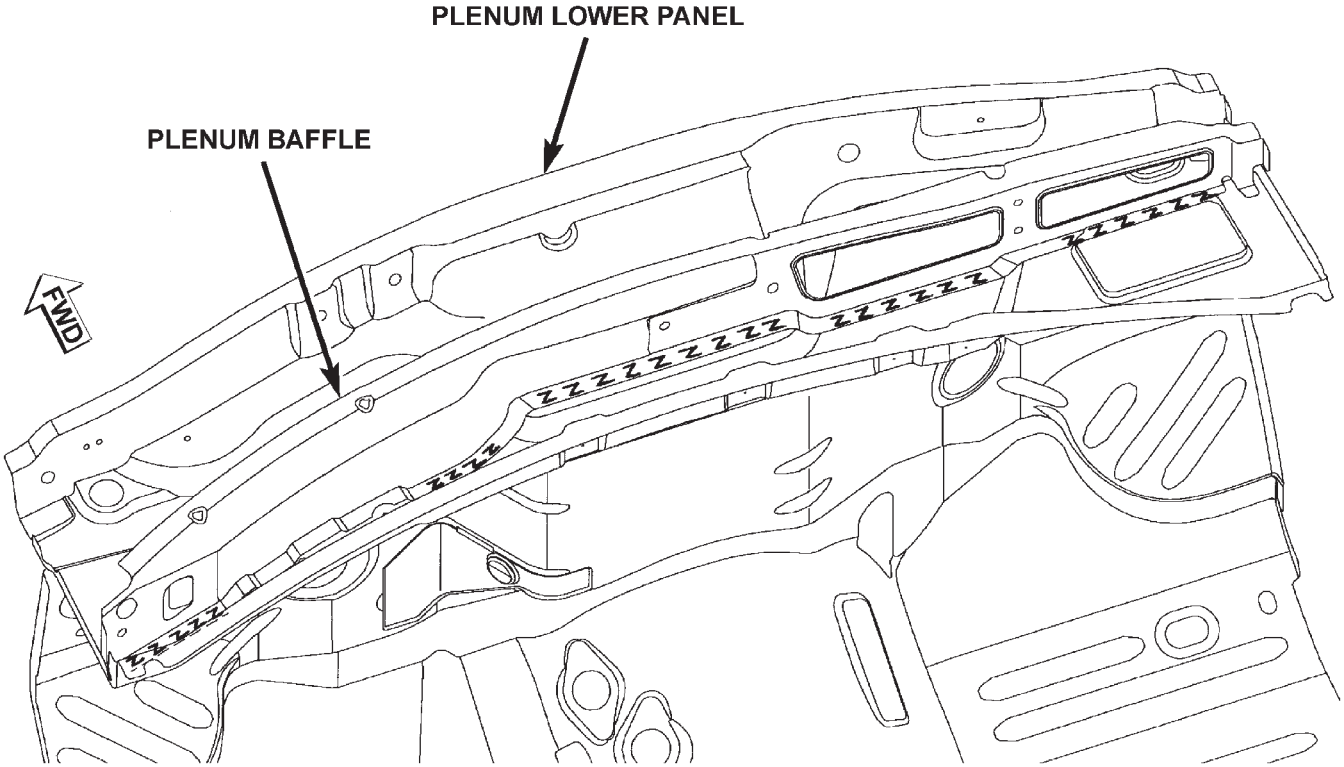

80b6fe97

SPECIFICATIONS (Continued)

DASH PANEL AND FRONT FLOOR PAN

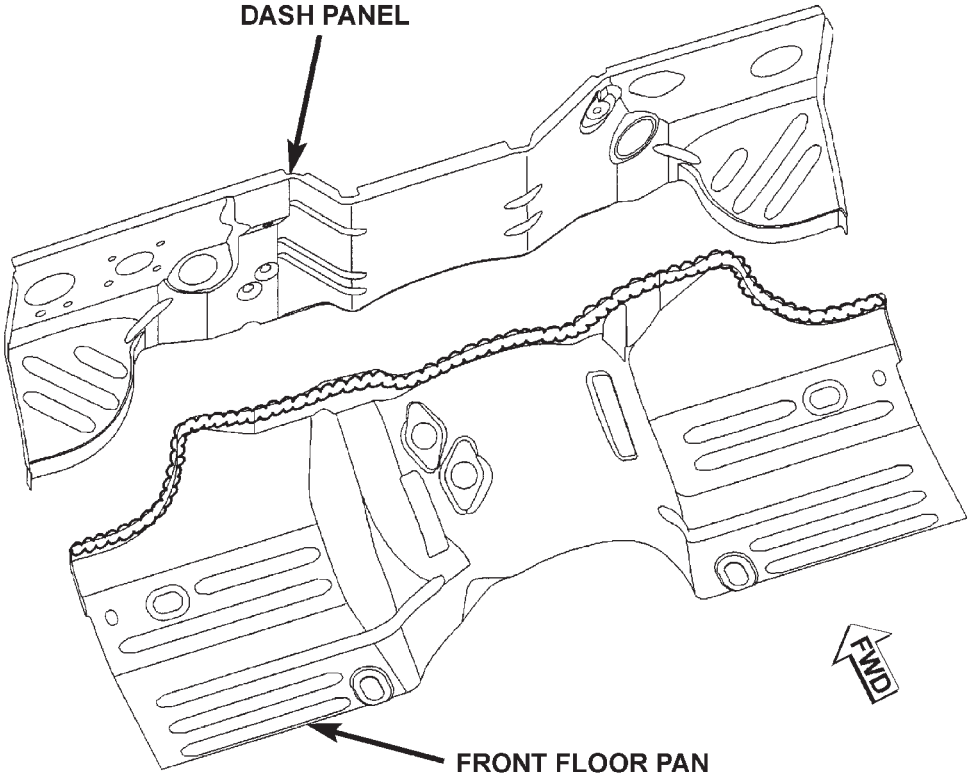

80b6fe98

SPECIFICATIONS (Continued)

PLENUM AND WINDSHIELD WIPER MOUNTING

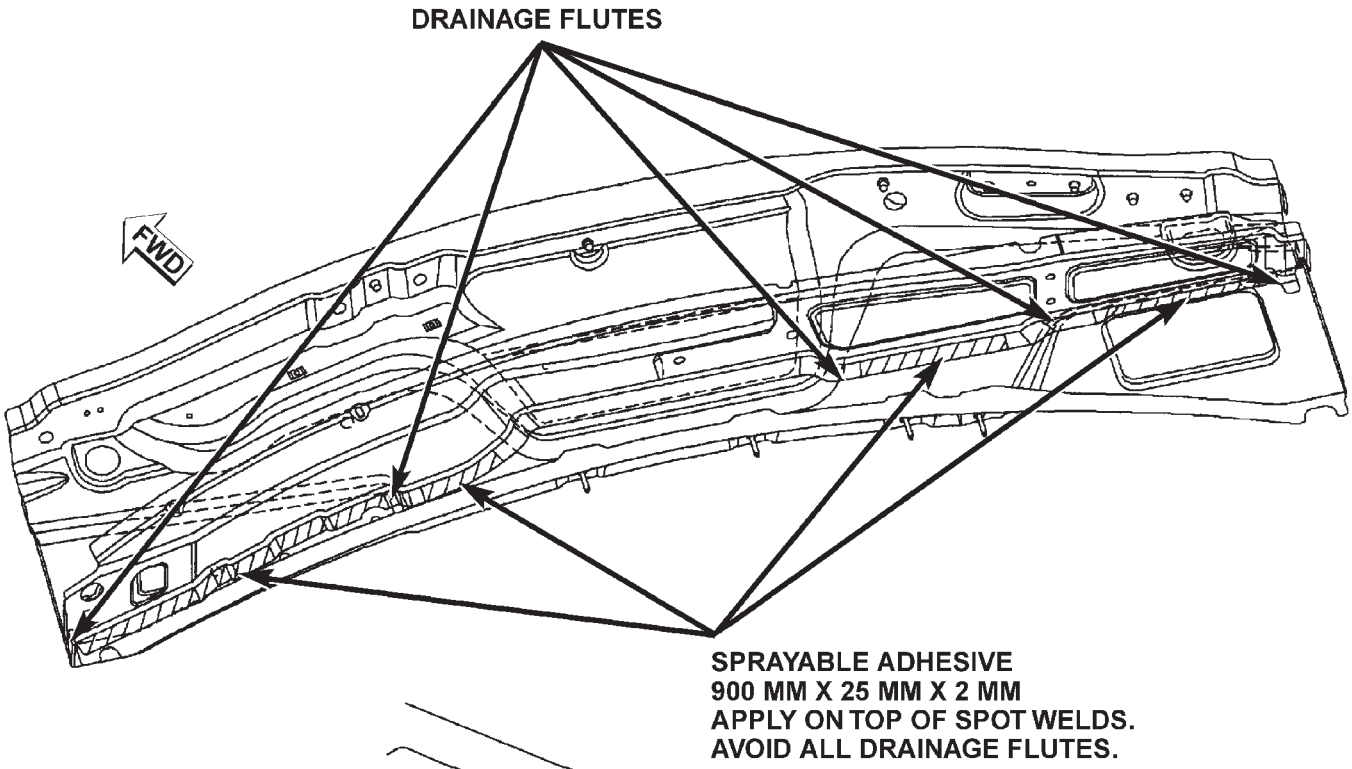

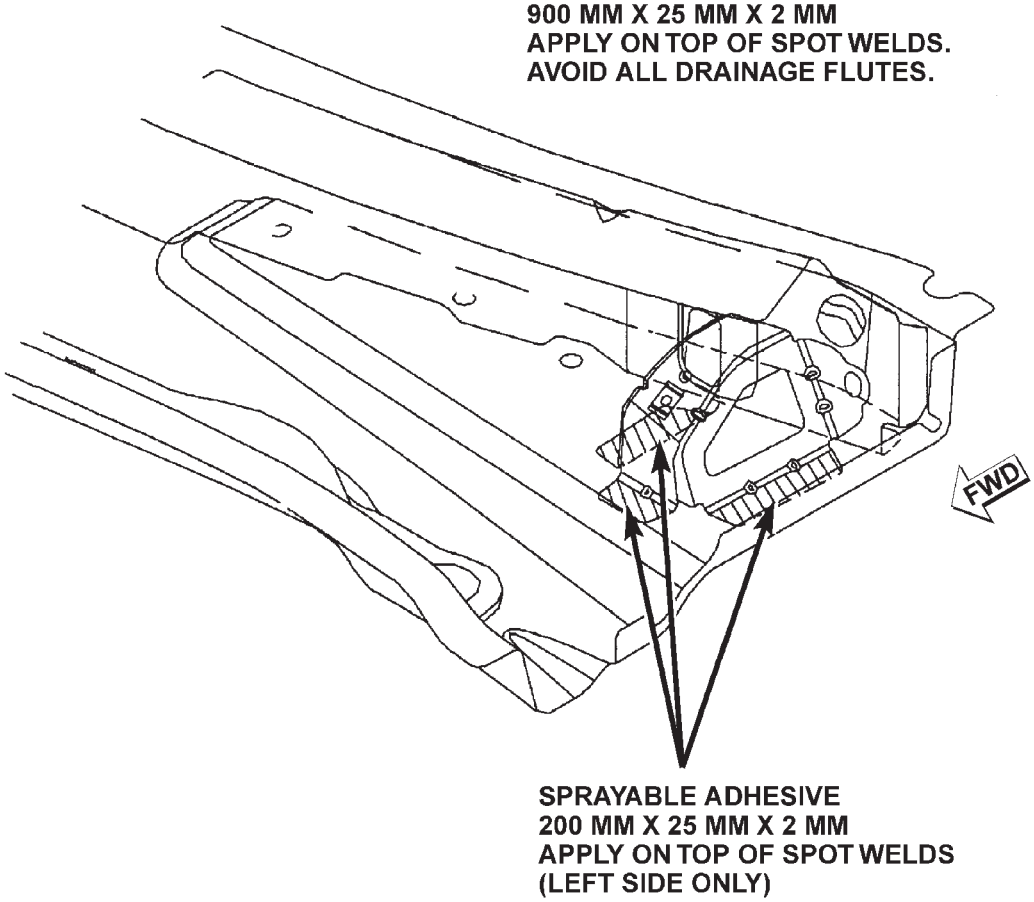

80b6fe1c

SPECIFICATIONS (Continued)

FRONT FLOOR PAN AND SILLS

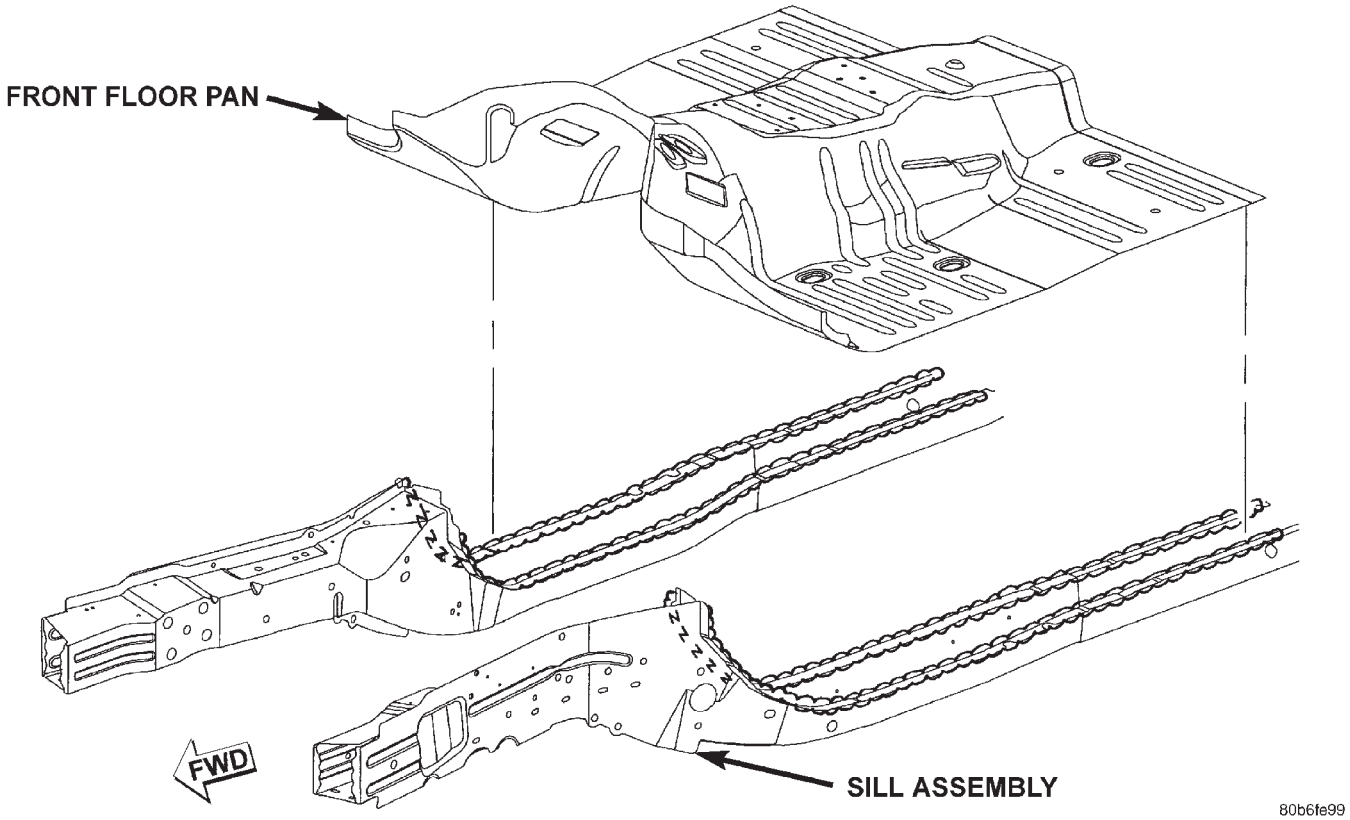

FRONT AND CENTER FLOOR PAN

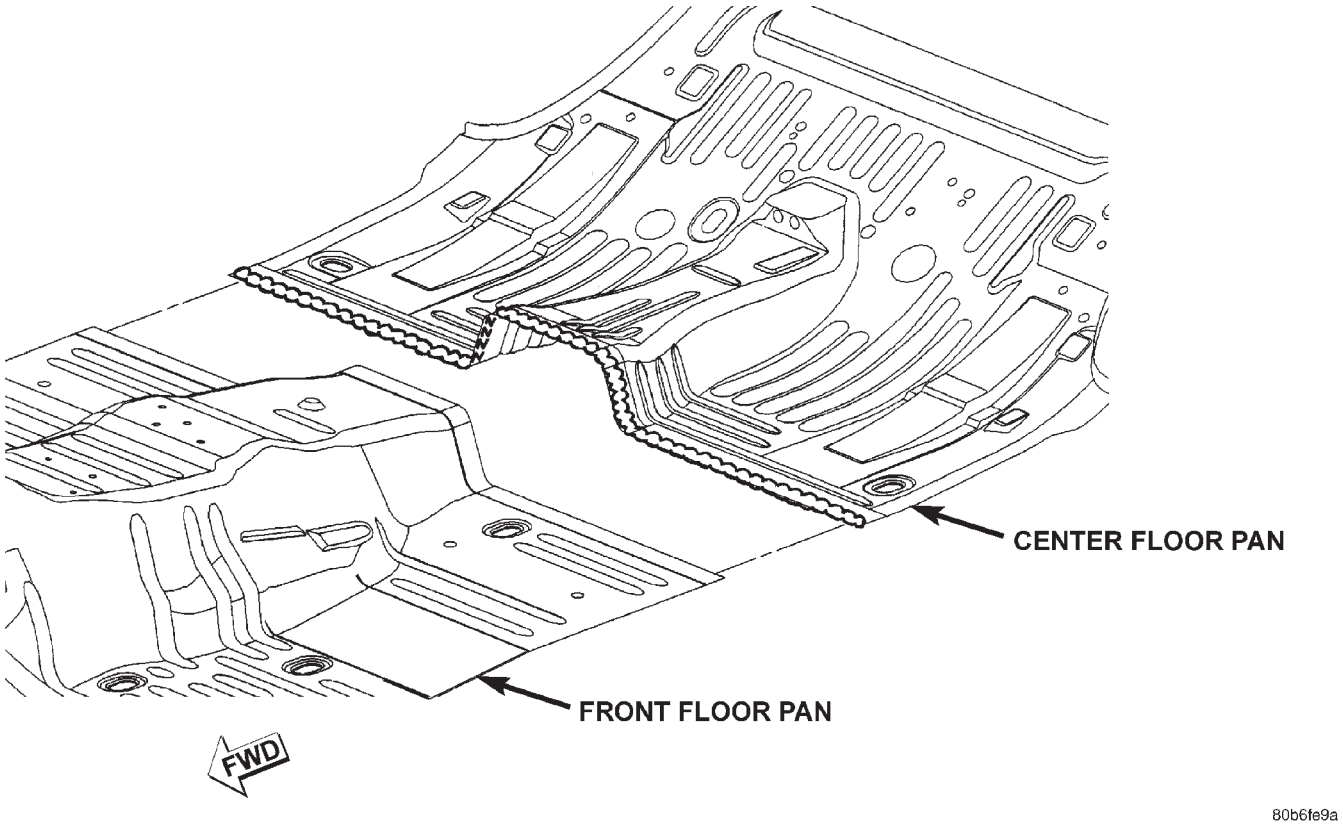

SPECIFICATIONS (Continued)

FRONT PAN AND INNER BODY SIDE APERTURE

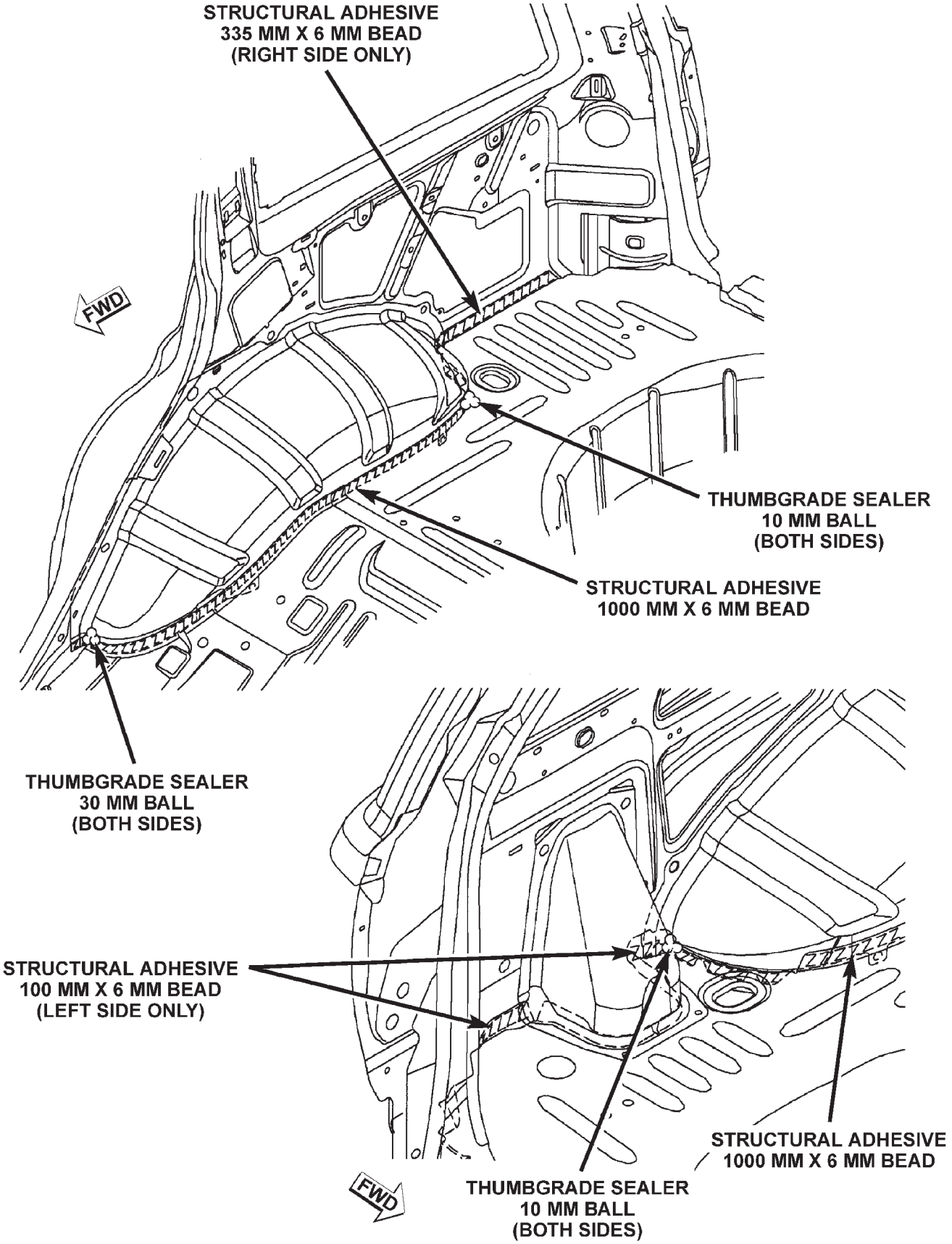

SPECIFICATIONS (Continued)

REAR SEAT CROSSMEMBER

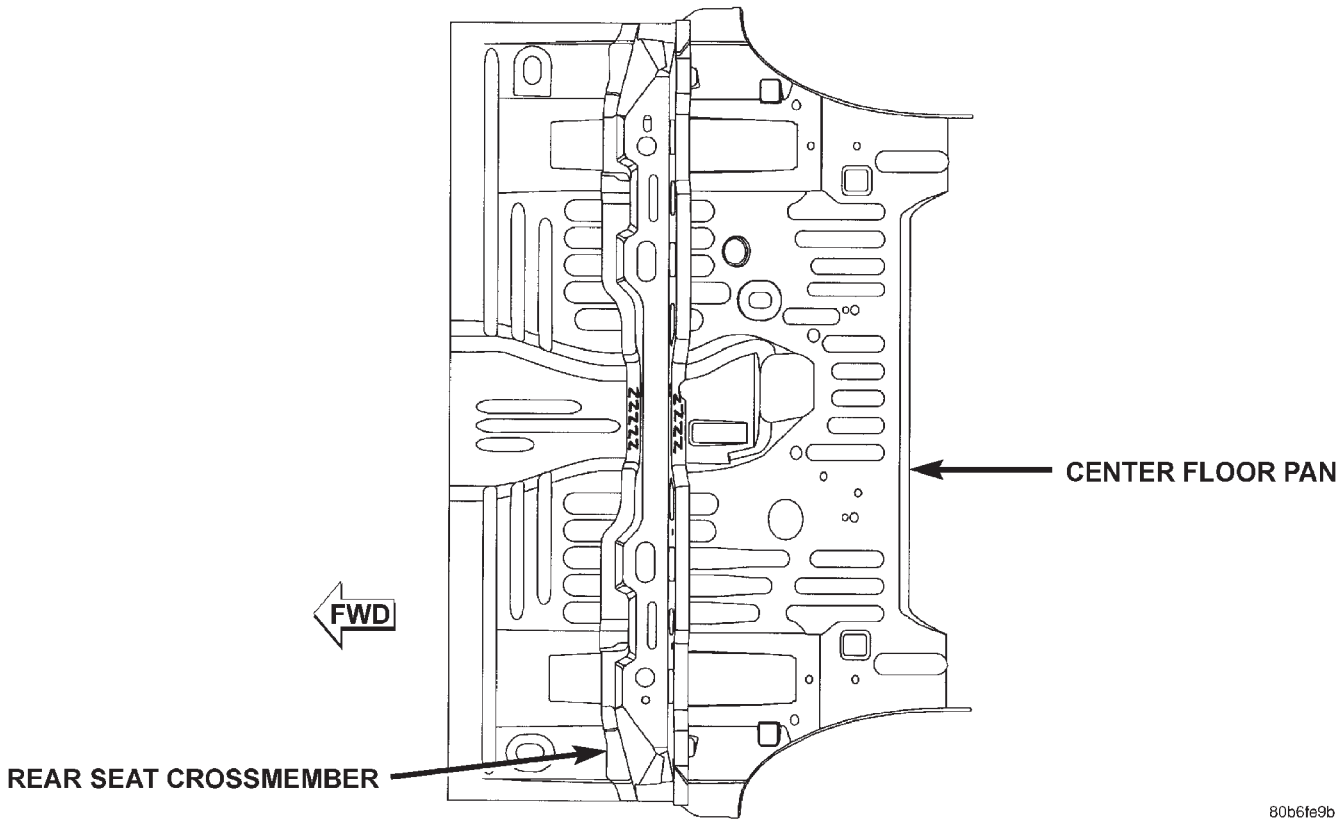

REAR INNER WHEELHOUSE

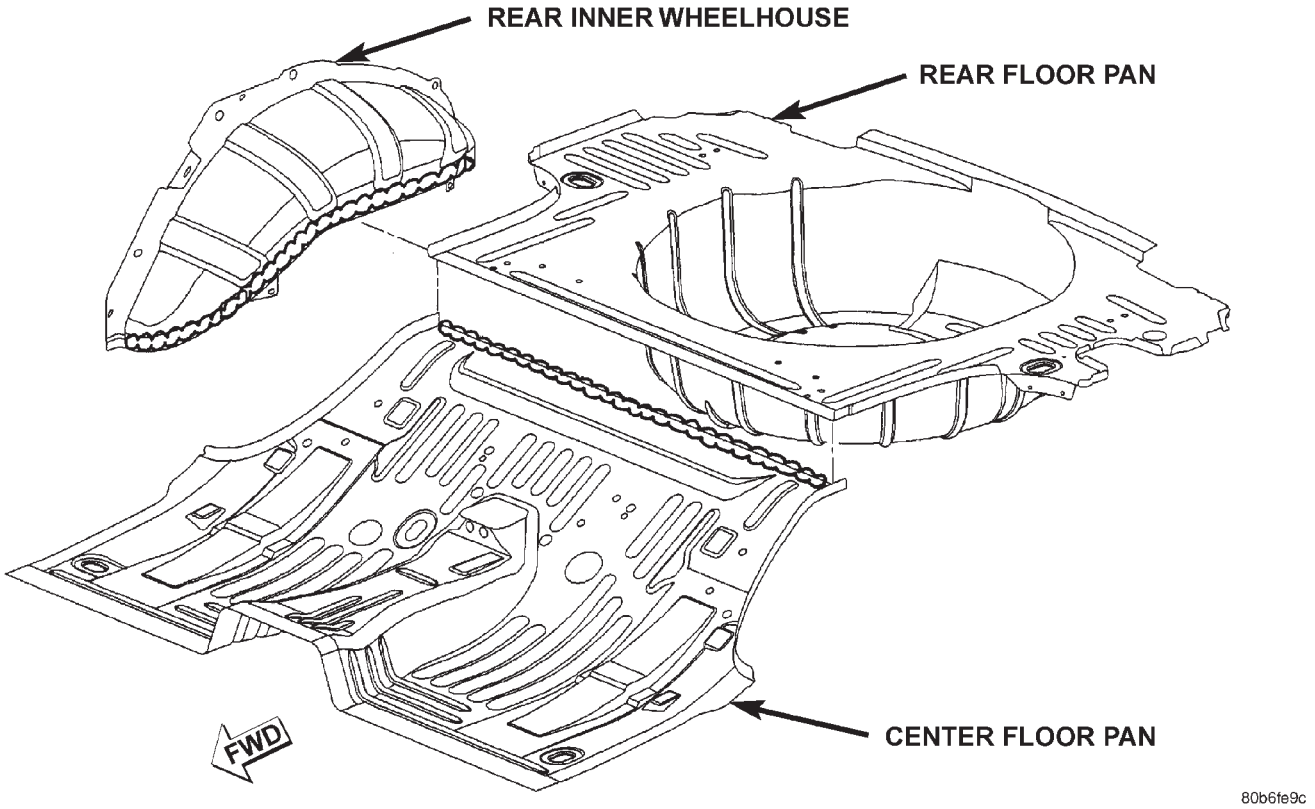

SPECIFICATIONS (Continued)

FLOOR PAN AND SILL ASSEMBLY

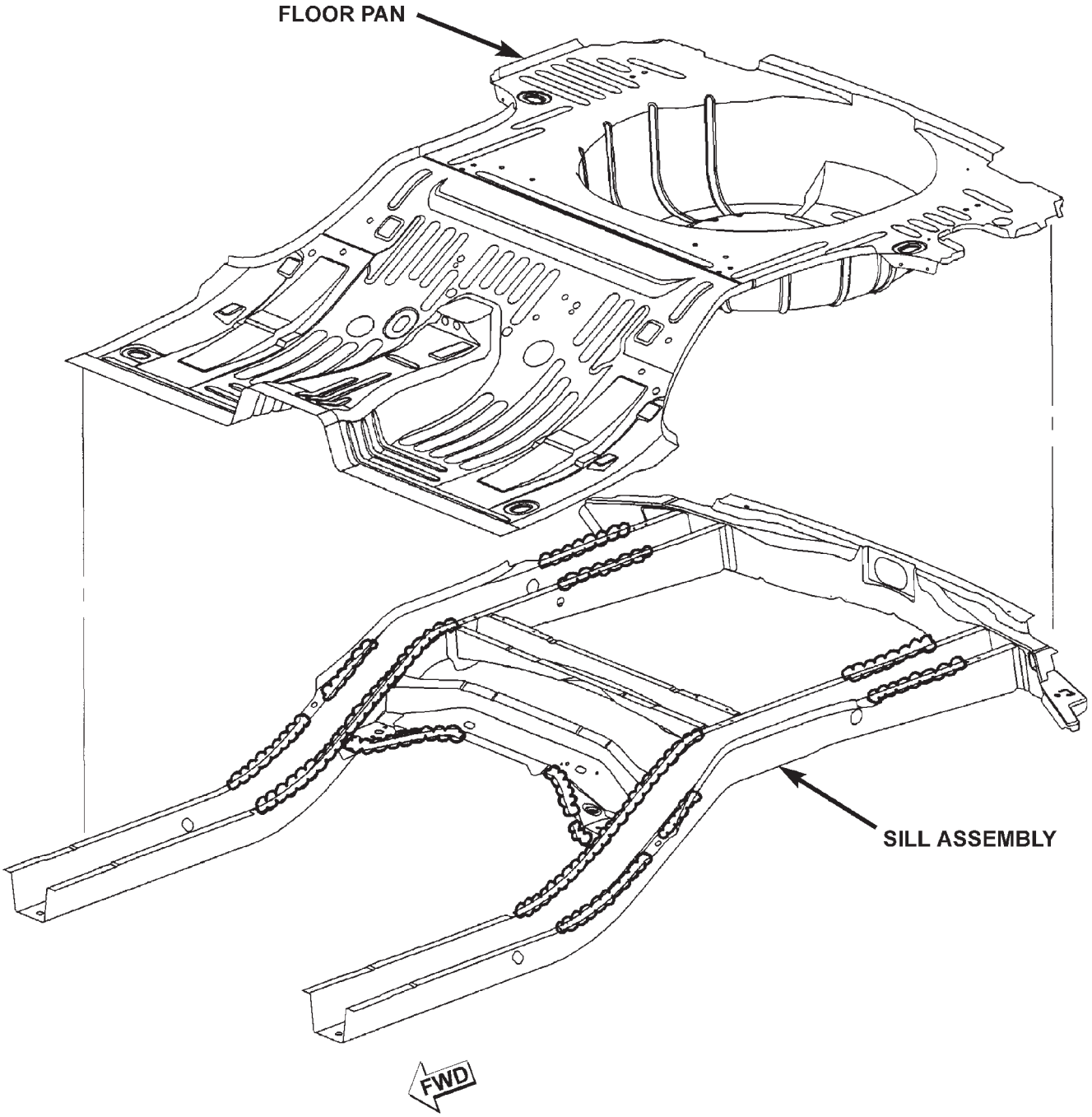

80b6fe9e

SPECIFICATIONS (Continued)

FLOOR PAN

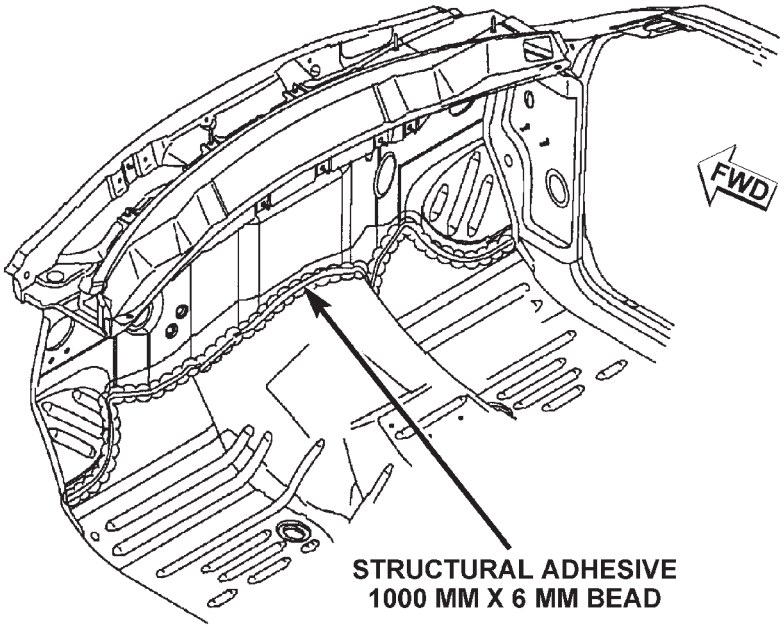

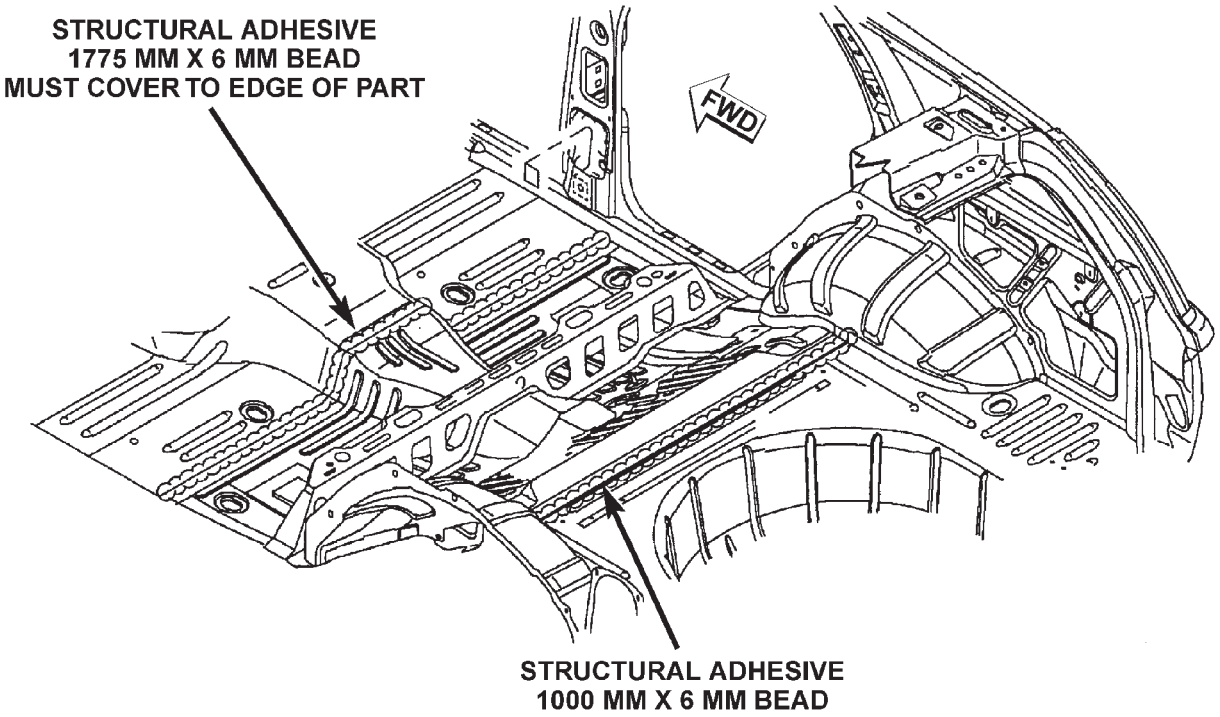

80b6fe1e

SPECIFICATIONS (Continued)

REAR INNER WHEELHOUSE AND REAR FLOOR PAN

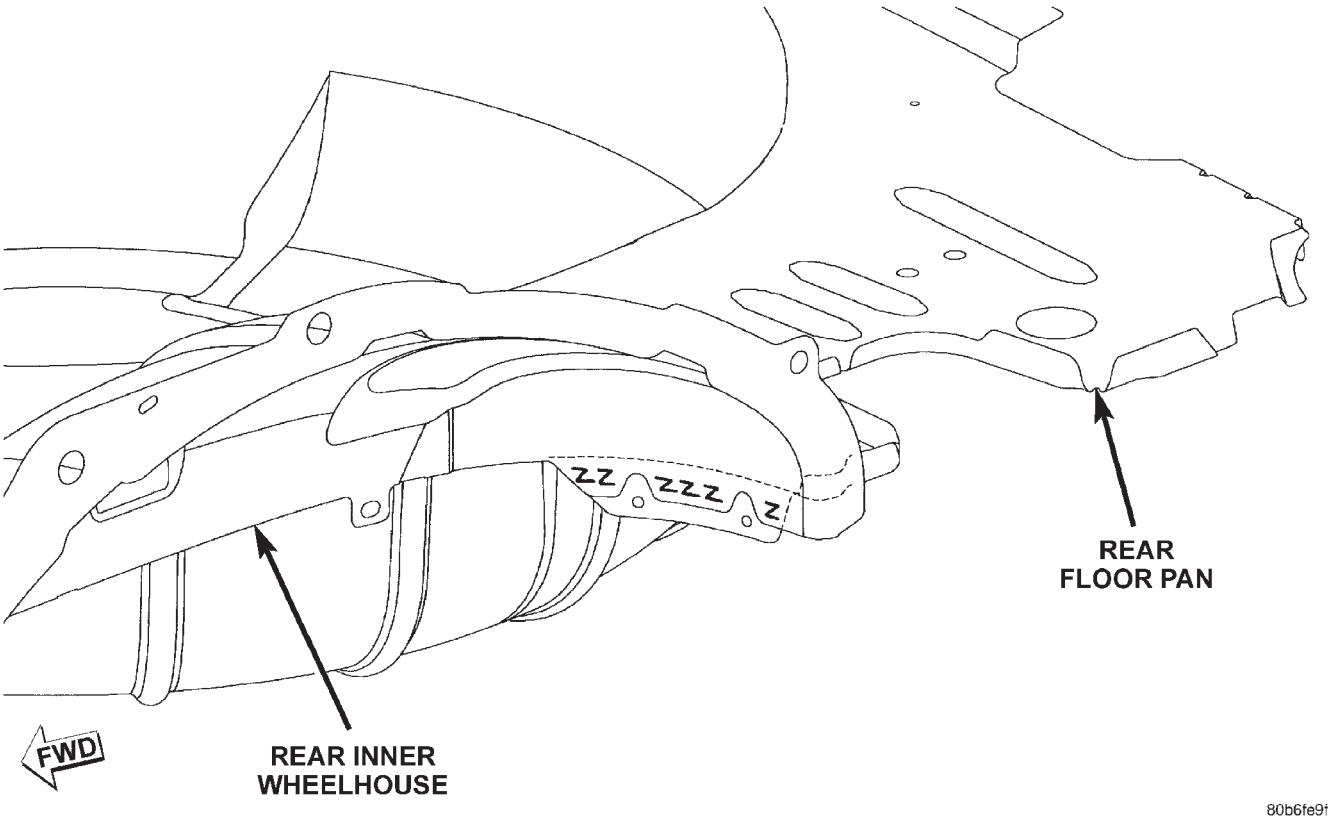

RIGHT INNER BODYSIDE APERTURE

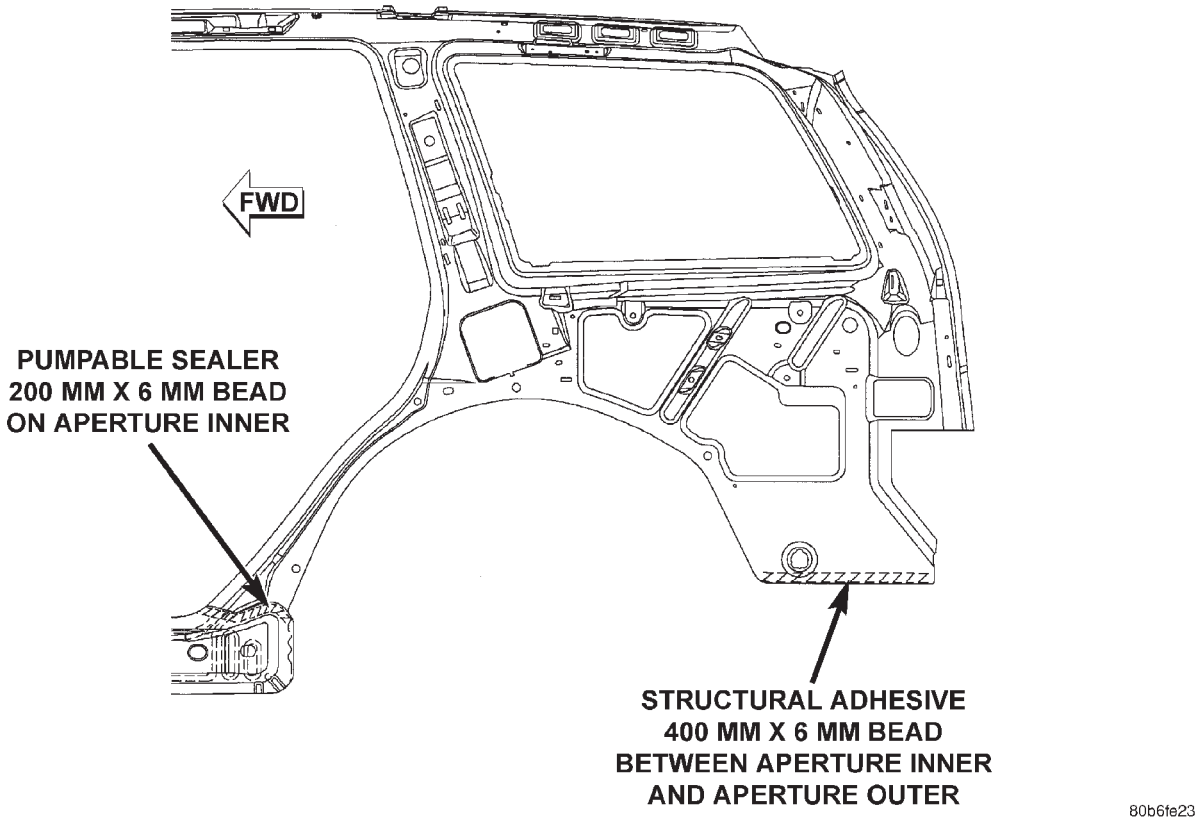

SPECIFICATIONS (Continued)

BODY SIDE INNER PANEL AND WHEELHOUSE

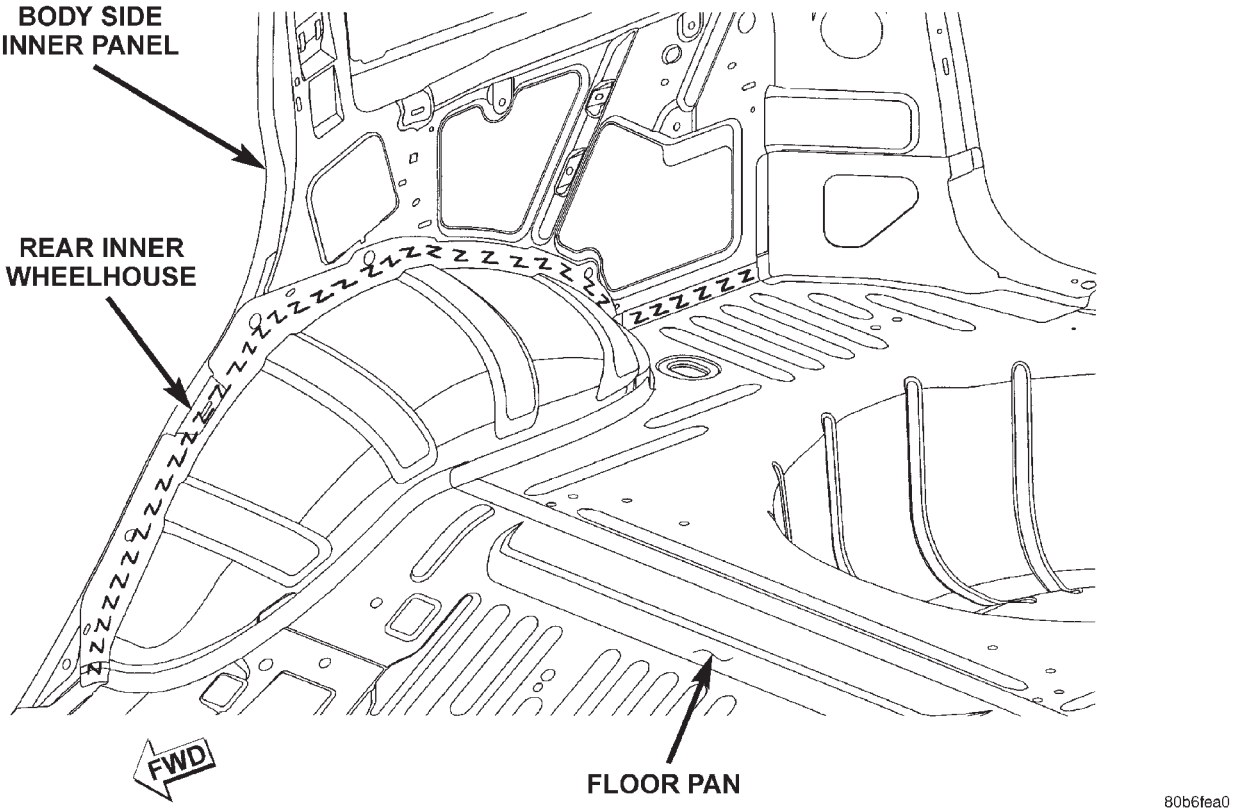

BODY SIDE OUTER PANEL AND REAR WHEELHOUSE OUTER PANEL

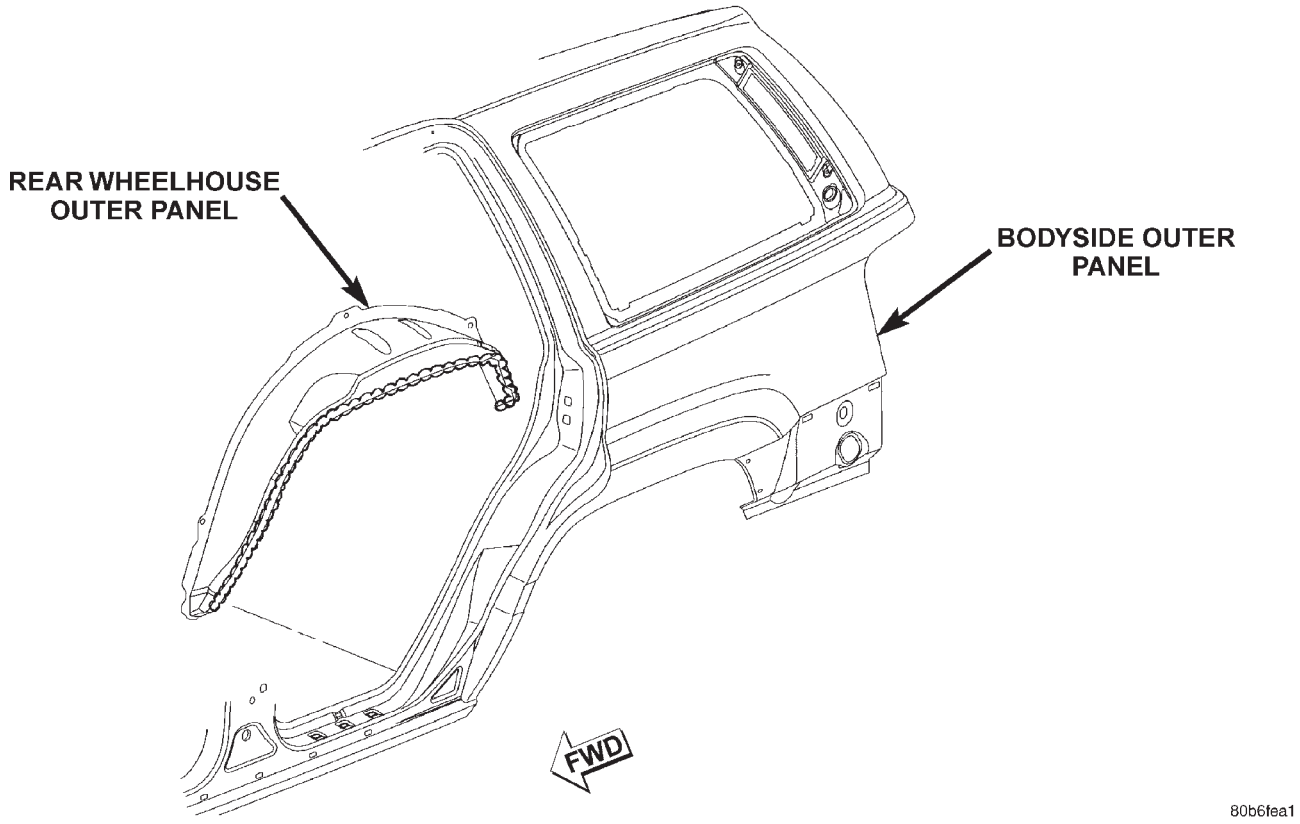

SPECIFICATIONS (Continued)

D-PILLAR AND FUEL FILLER GUSSETS

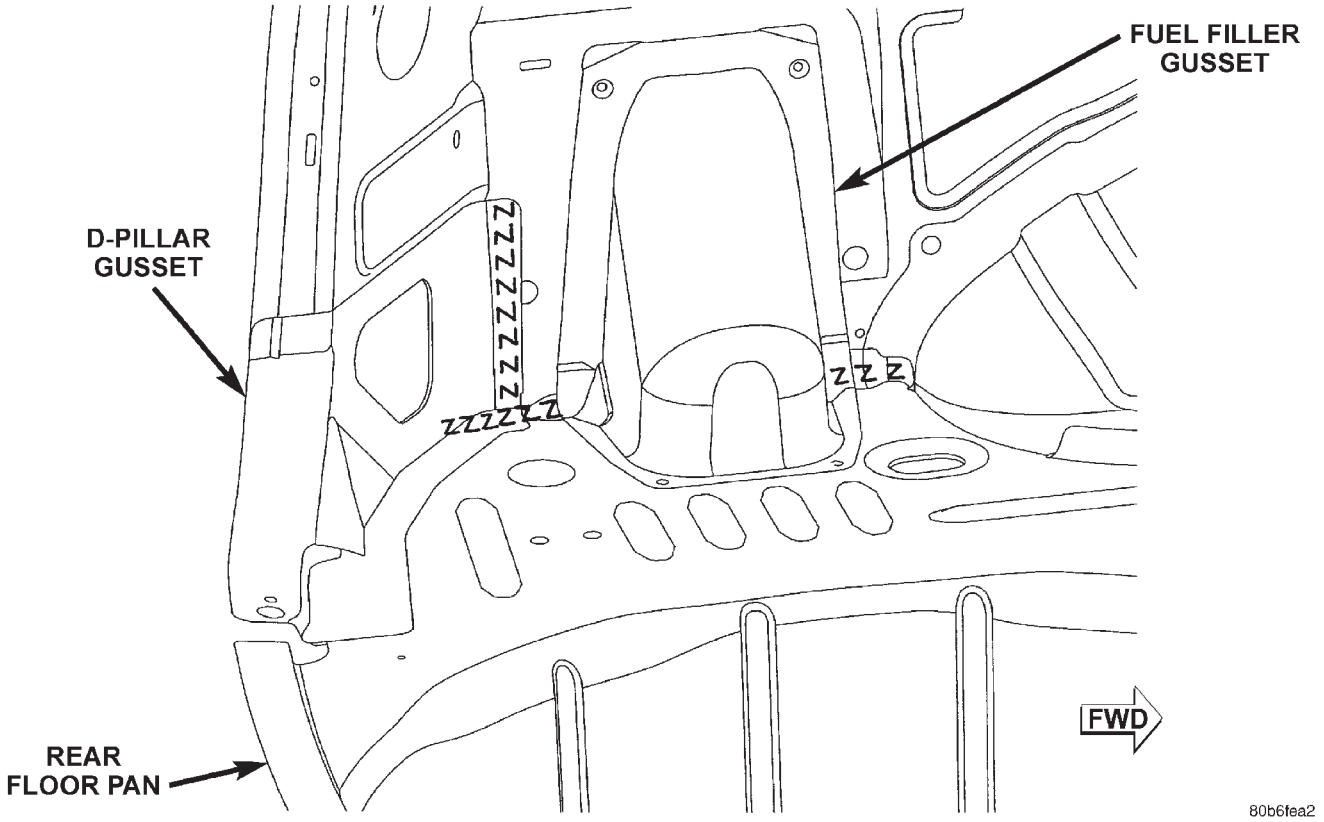

SPECIFICATIONS (Continued)

LIFTGATE

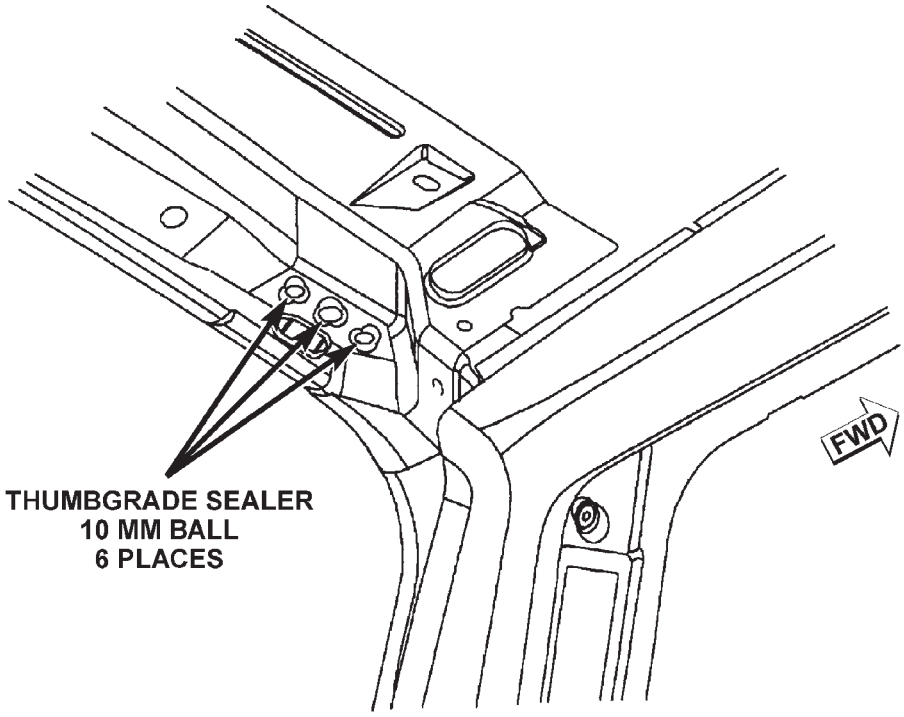

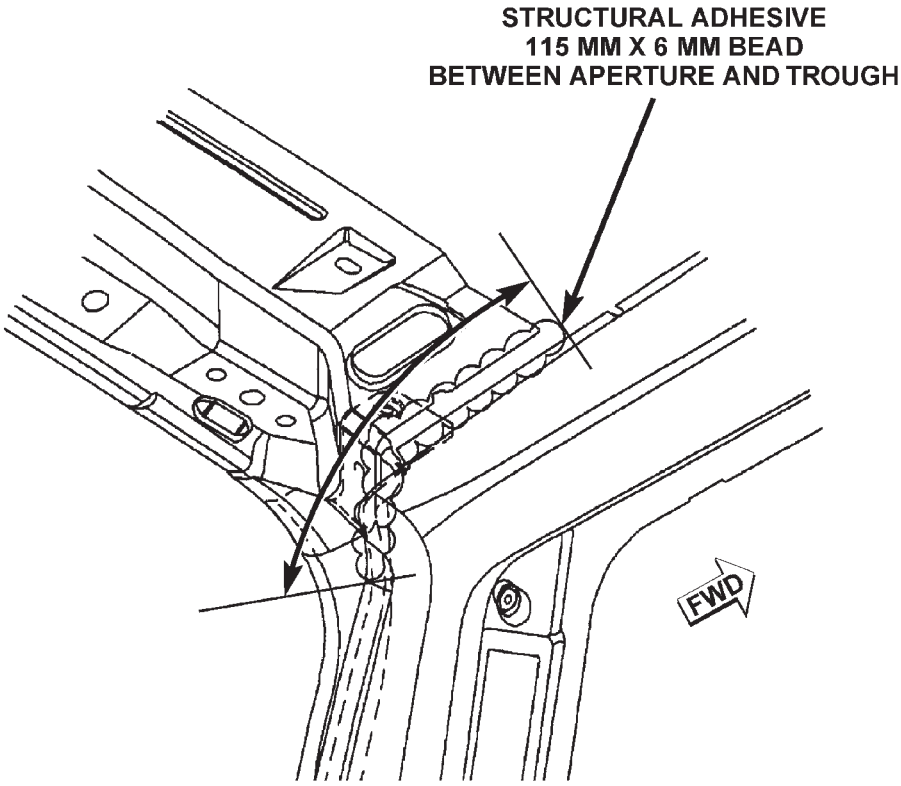

80b6fe26

SPECIFICATIONS (Continued)

TAILLAMP MOUNTING PANEL

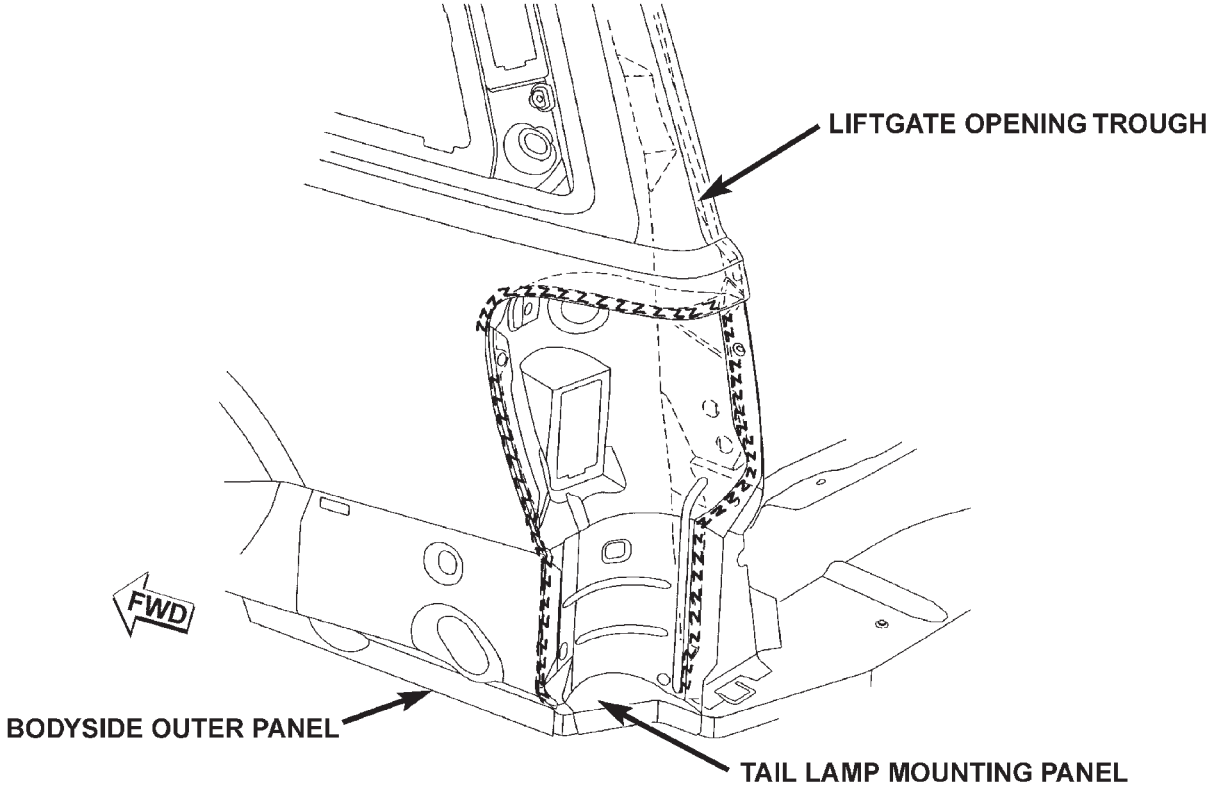

80b6fea3

SPECIFICATIONS (Continued)

TAILLAMP

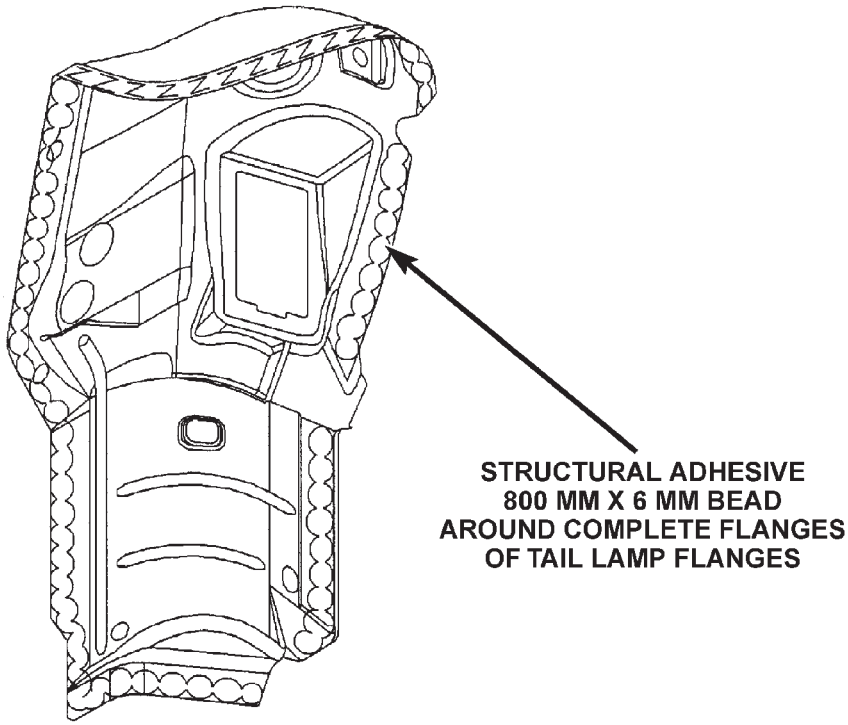

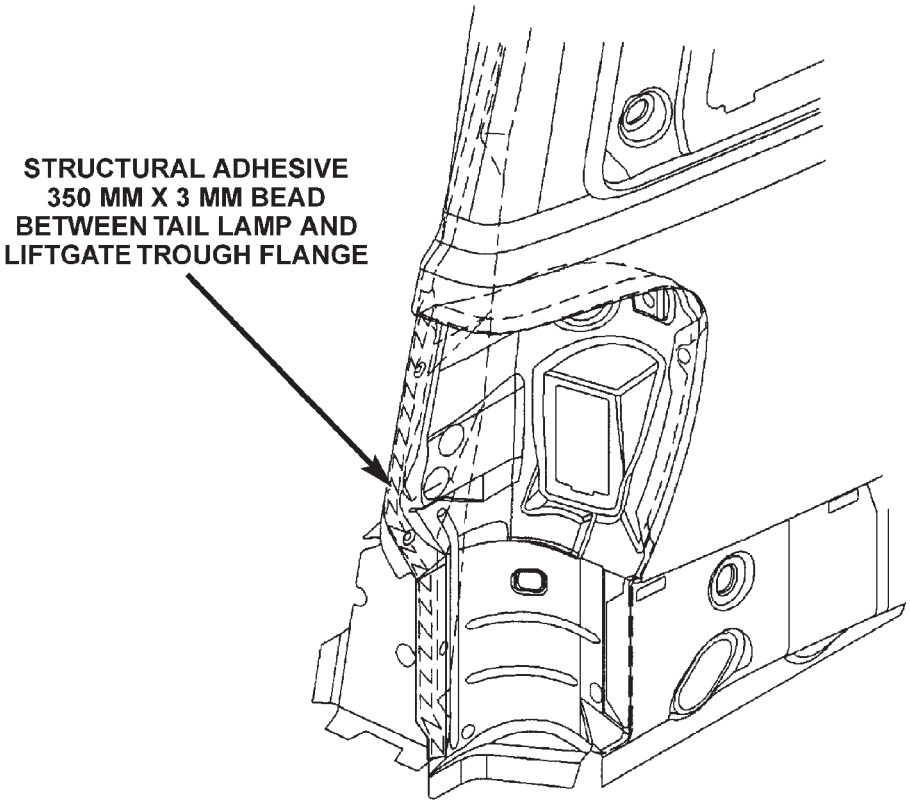

80b6fe27

SPECIFICATIONS (Continued)

REAR INNER CROSSMEMBER

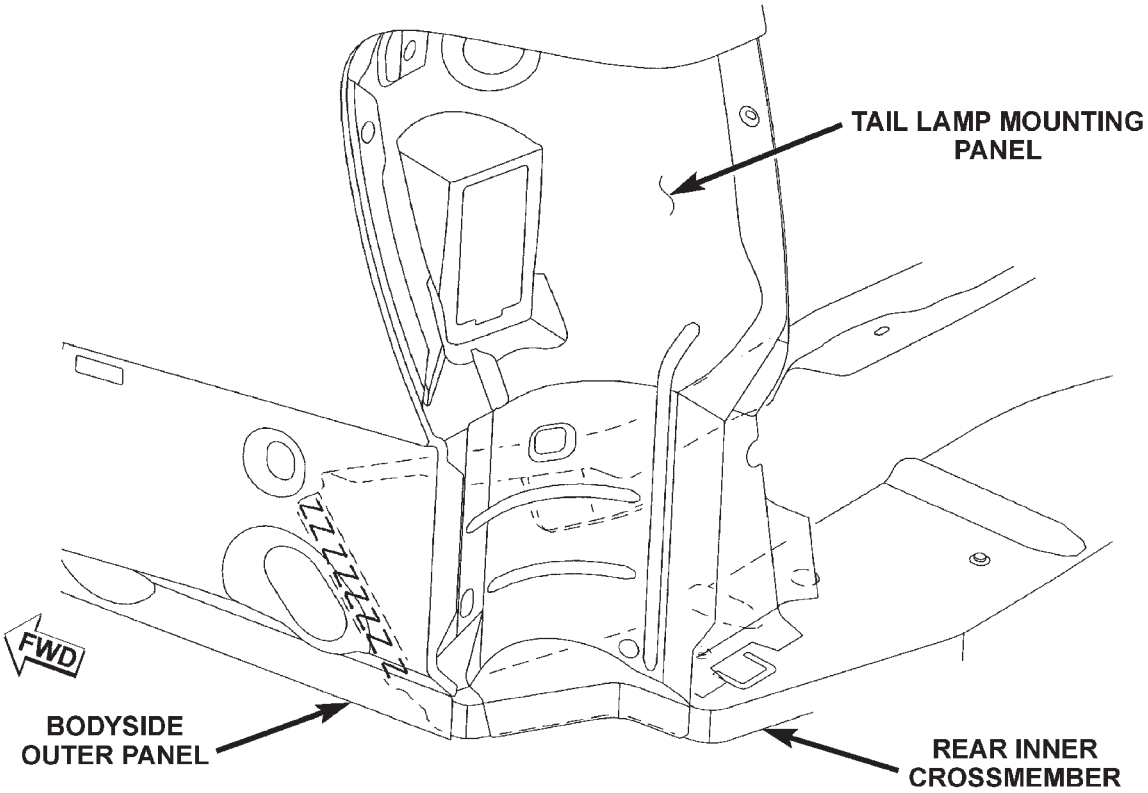

80b6fea4

ROOF BOWS

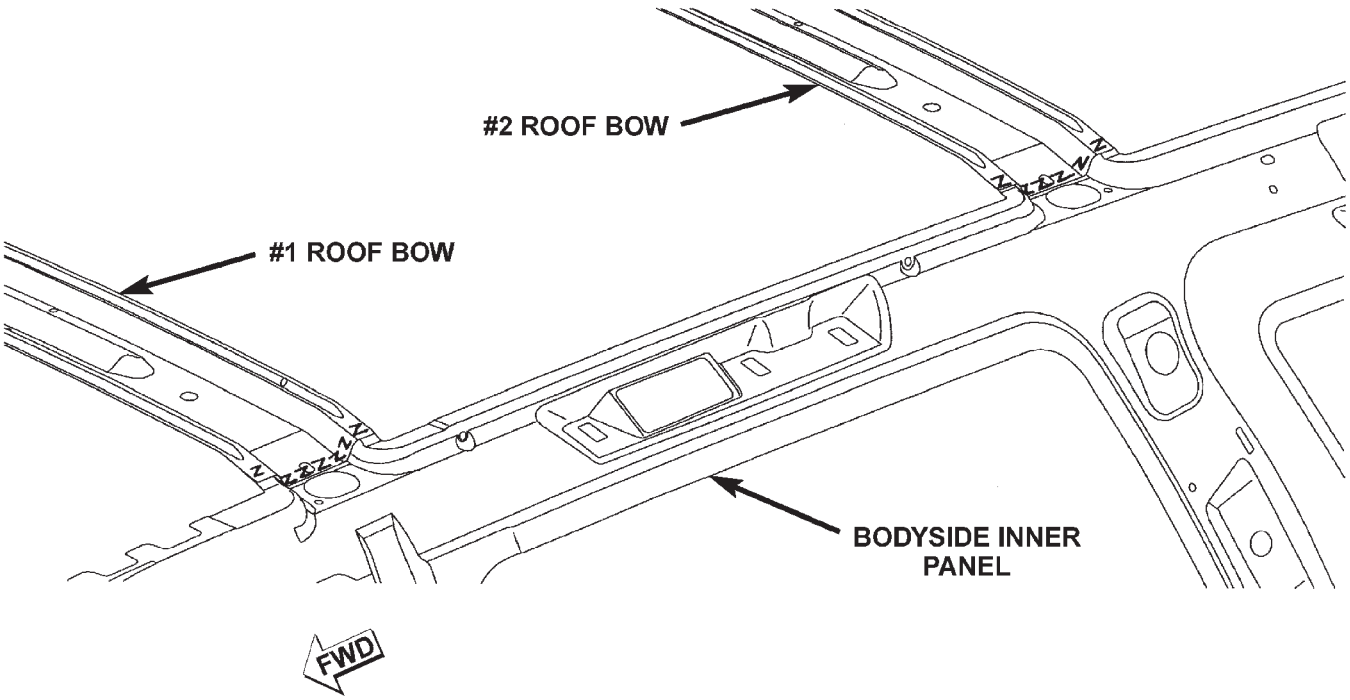

80b6fe95

SPECIFICATIONS (Continued)

REAR LOWER HEADER

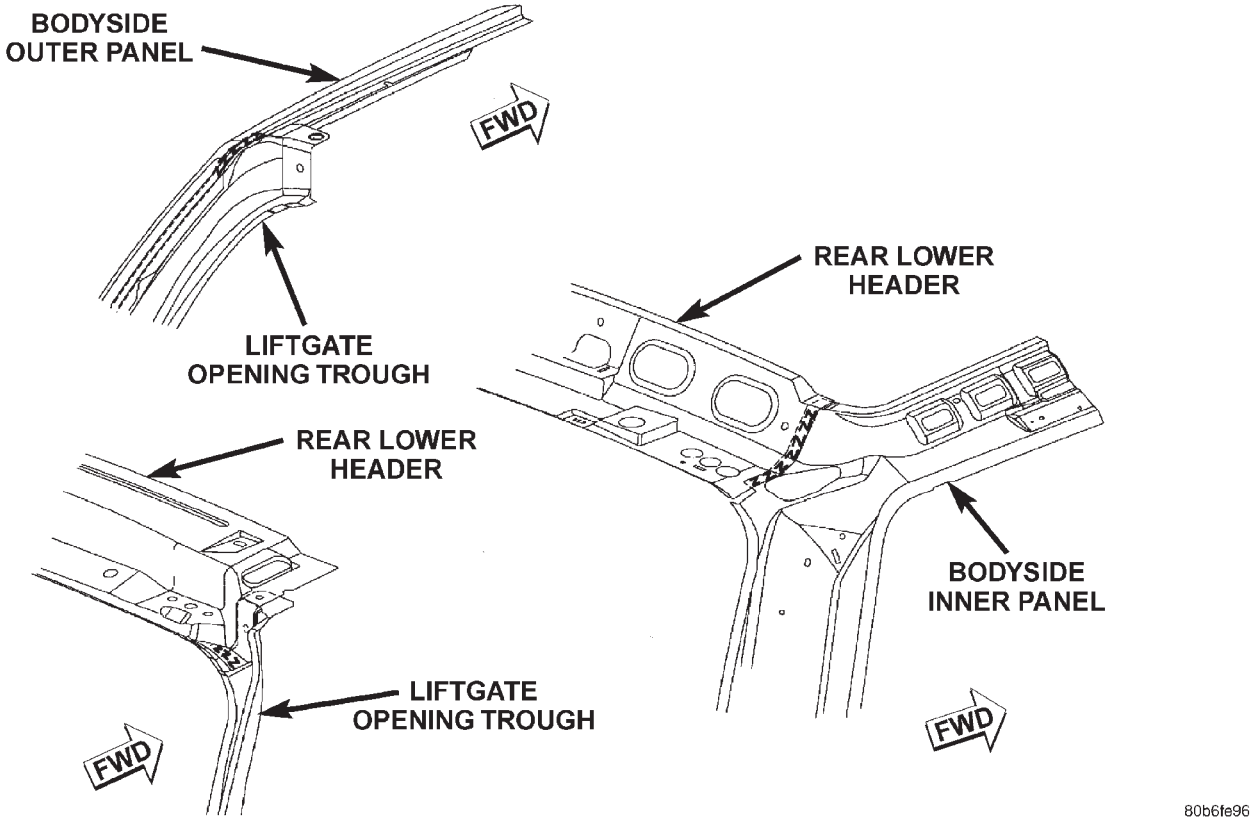

SPECIFICATIONS (Continued)

BODY GAP AND FLUSH MEASUREMENTS

WJ FRONT VIEW

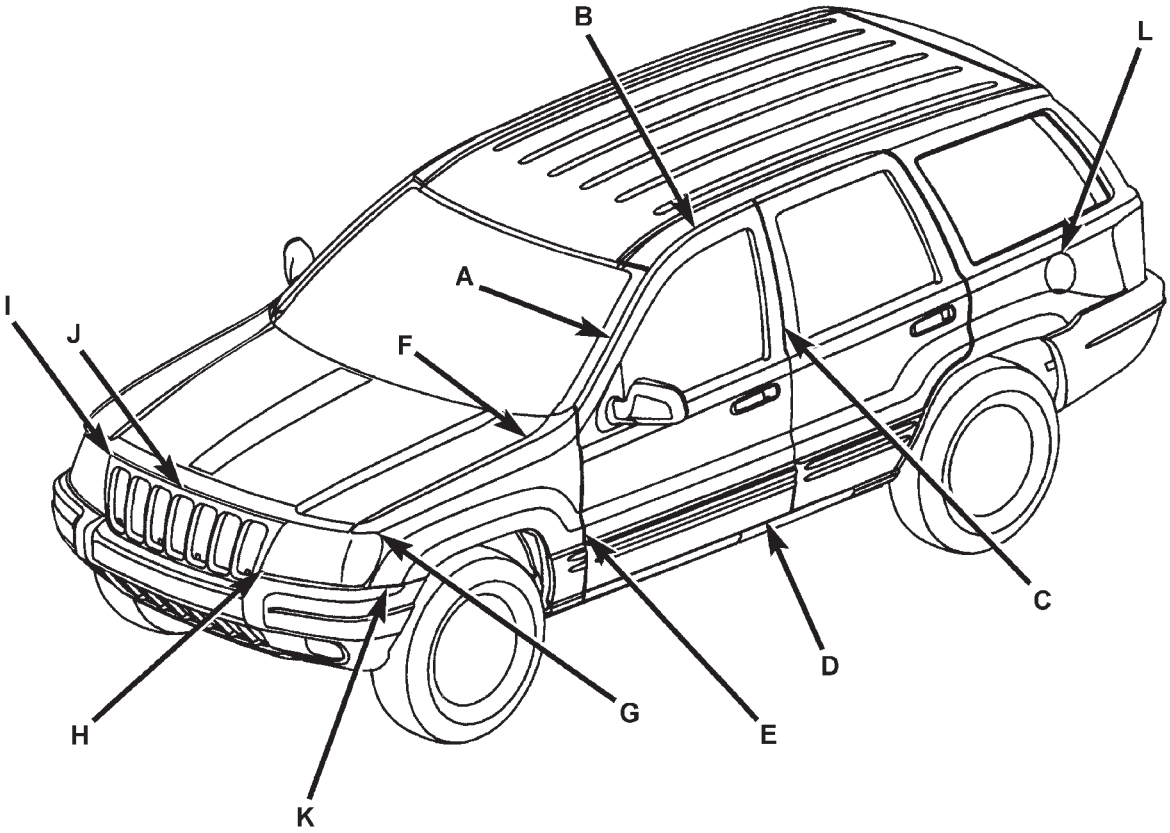

	LOCATION	GAP	FLUSH
A	Front Door to Windshield Pillar	N/A	3.0 +/- 1.0
B	Front Door Header to Aperture	6.0 +/- 1.0	1.0 +/- 1.5
C	Front Door to Rear Door	5.0 +/- 1.0	0.0 +/- 1.0
D	Front Door to Aperture at Sill	7.0 +/- 1.5	N/A
E	Front Door to Fender	5.0 +/- 1.0	0.5 +/- 1.0
F	Hood to Fender	5.0 +/- 1.0	0.0 +/- 1.0
G	Headlamp to Fender	5.0 +/- 2.0	3.0 +/- 2.0
H	Headlamp to Grille	5.5 +/- 2.0	0.0 +/- 2.0
I	Grille to Headlamp	N/A	0.0 +/- 1.0
J	Grille to Hood	10.0 +/- 2.0	0.8 +/- 2.0
K	Front Fascia to Fender	Net + 1.0 - 0.0	3.0 +/- 3.0
L	Fuel Filler Door to Bodyside	3.0 +/- 0.75	0.5 +/- 0.75

NOTE: ALL MEASUREMENTS ARE IN MM.

80b6fe18

SPECIFICATIONS (Continued)

WJ REAR VIEW

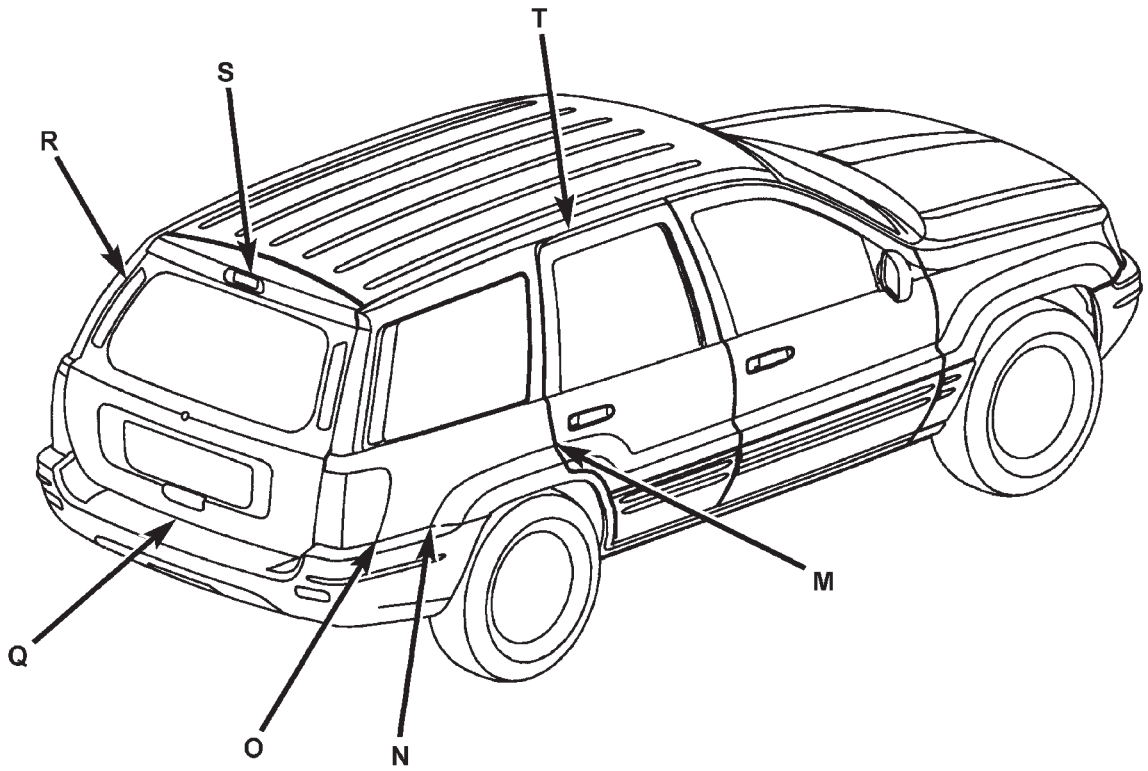

	LOCATION	GAP	FLUSH
M	Rear Door to Quarter Panel	5.0 +/- 1.0	0.0 +/- 1.0
N	Aperture to Rear Fascia	Net to 1.0	3.0 +/- 2.0
O	Taillamp to Quarter Panel	2.0 +/- 1.0	3.0 +/- 1.5
P	Taillamp to Liftgate	5.0 +/- 1.5	3.0 +/- 1.5
Q	Liftgate to Fascia	10.0 +/- 3.0	N/A
R	Liftgate to Aperture	5.0 +/- 1.5	1.0 +/- 1.0
S	Liftgate to Roof	11.0 +/- 1.5	1.0 +/- 1.0
T	Rear Door Header to Aperture	6.0 +/- 1.0	1.0 +/- 1.5

NOTE: ALL MEASUREMENTS ARE IN MM.

80b6fe19

SPECIFICATIONS (Continued)

BODY OPENING DIMENSIONS
WINDSHIELD AND FRONT DOOR OPENING

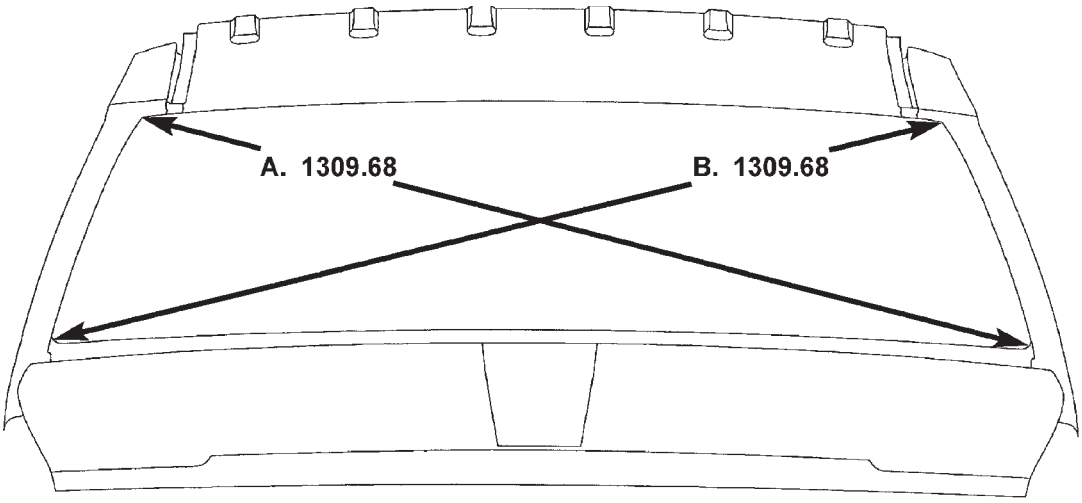

ALL MEASUREMENTS IN MILLIMETERS

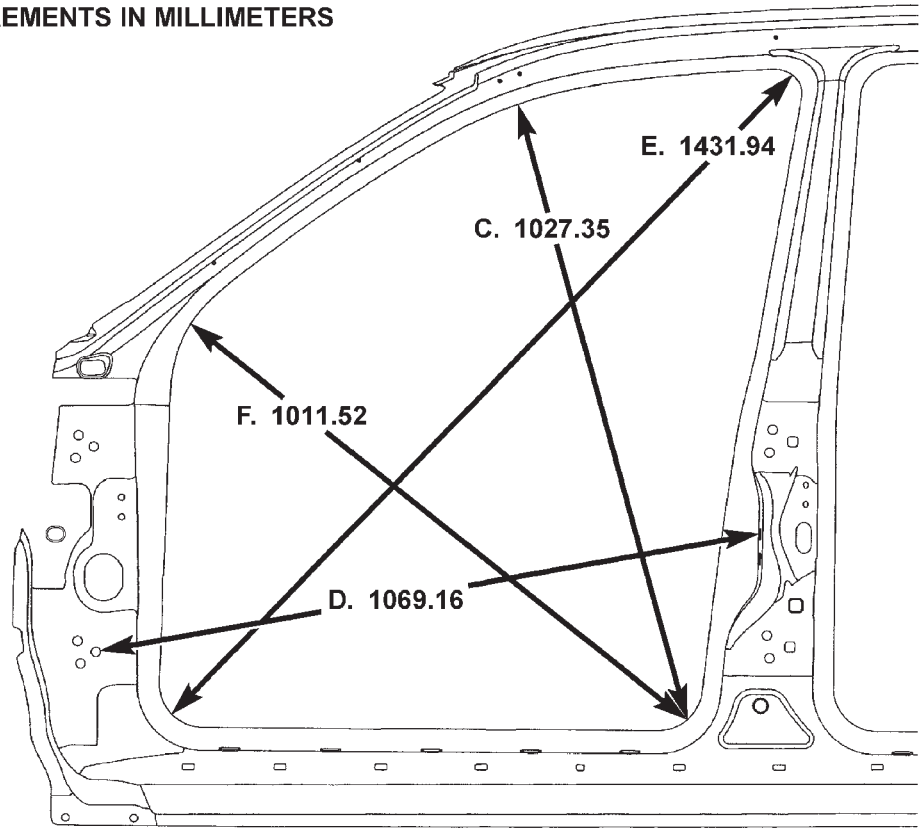

A. & B. Center of radius at bottom to center of radius at top.

C. Center of front door lower rear corner radius to center of A-pillar radius.

D. Center of door hinge mount to center of door striker mount.

E. Center of radius at bottom front to center of radius at top rear.

F. Center of radius at bottom rear to center of radius at lower A-pillar.

80b6fea5

SPECIFICATIONS (Continued)

REAR DOOR AND QUARTER GLASS OPENING

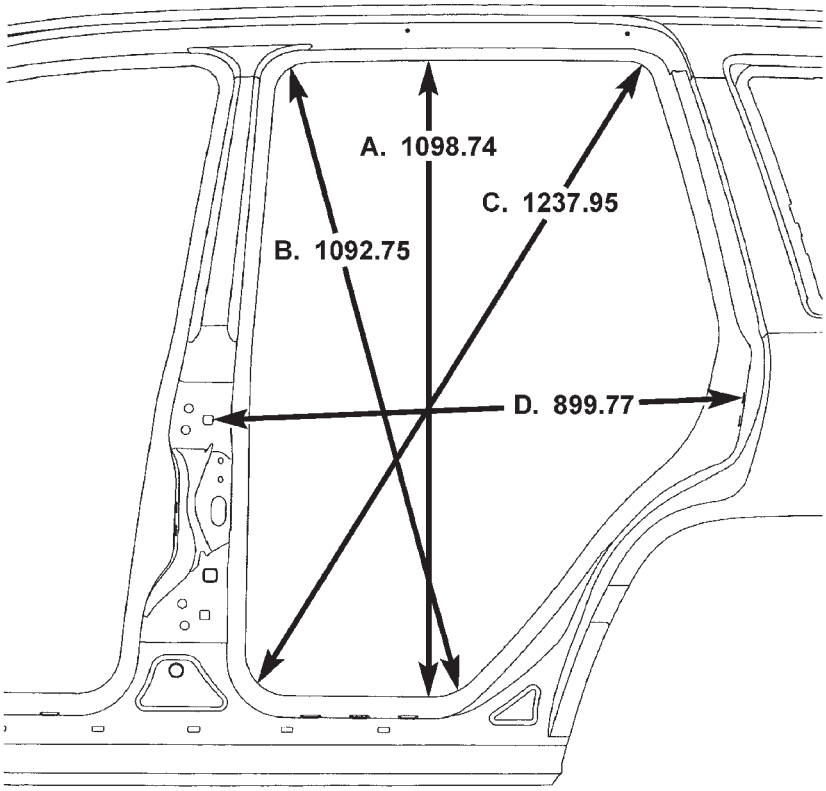

A. Quarter panel to front outer body side upper and lower seam.

B. Center of front upper door radius to center of rear lower door radius.

C. Center of front lower door radius to center of rear upper door radius.

D. Rear door hinge mount to rear door striker mount.

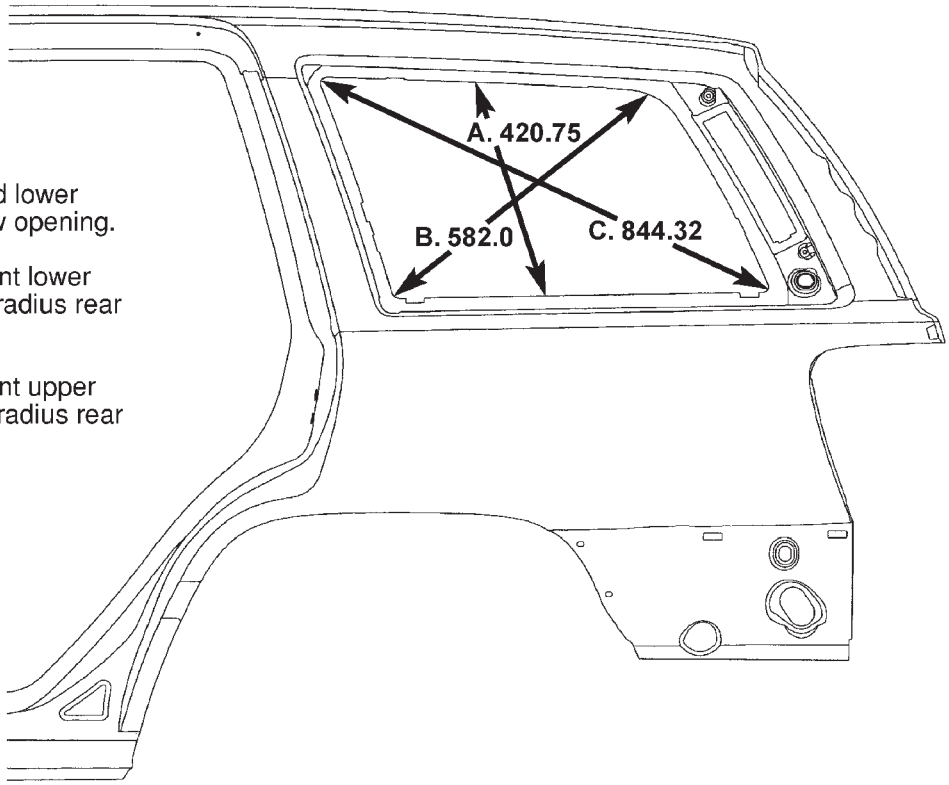

A. Center of upper and lower rear quarter window opening.

B. Center of radius front lower corner to center of radius rear upper corner.

C. Center of radius front upper corner ro center of radius rear lower corner.

ALL MEASUREMENTS IN MILLIMETERS

80b6fea6

SPECIFICATIONS (Continued)

LIFTGATE OPENING AND ENGINE COMPARTMENT

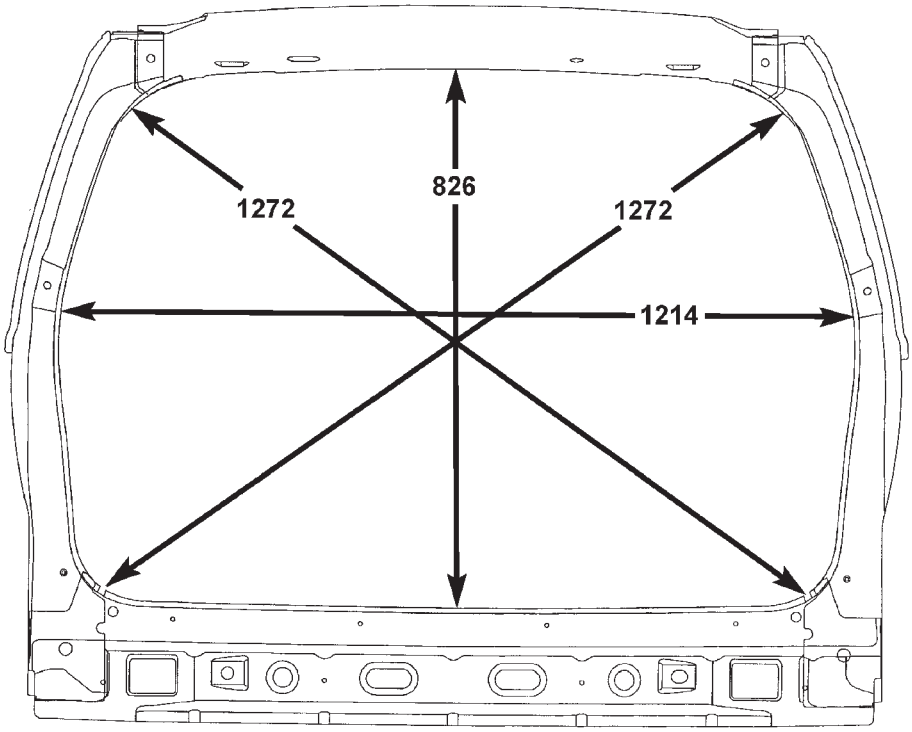

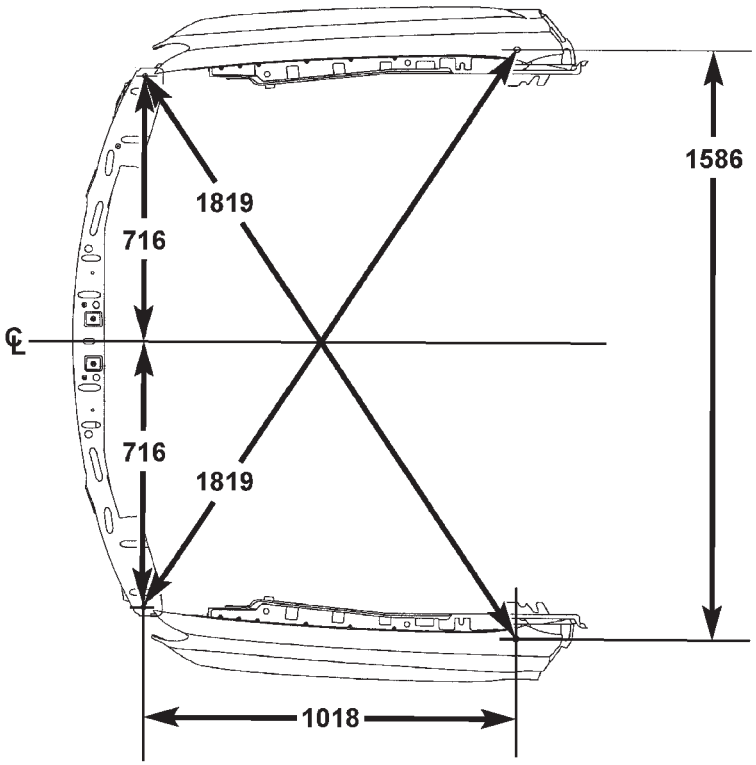

ALL MEASUREMENTS IN MILLIMETERS

80b6feb9

SPECIFICATIONS (Continued)

TORQUE SPECIFICATIONS

BODY COMPONENTS

DESCRIPTION . . . . . TORQUE

Sunroof module to roof panel. . . 11N·m (97 in. lbs.).

Front bucket seat to floor pan bolts. . . . . 40N·m (30 ft. lbs.).

Front bucket seat to floor pan front bolts. . . . 40N·m (30 ft. lbs.).

Bucket seat track adjuster nuts to seat cushion frame. . . . . 28N·m (20 ft. lbs.).

Bucket seat recliner to seat back frame bolts. 28N·m (20 ft. lbs.).

Bucket seat back frame recliner bolts to seat cushion frame. . . . . 28N·m (20 ft. lbs.).

Rear seat cushion latch base panel screws. . . 8 N·m (75 in. lbs.).

Rear seat cushion to floor pan bolts. . . . . 11 N·m (8 ft. lbs.).

Rear seat back left side support bracket to center pivot bracket. . . . . 28 N·m (20 ft. lbs.).

Rear seat back right side support bracket. . . 28N·m (20 ft. lbs.).

Rear seat back latch/hinge to seat back frame.28N·m (20 ft.lbs.).

Hood latch to radiator crossmember. . . . . 11N·m (8 ft.lbs.).

Front door hinge bolts. . . . . 35N·m (26 ft. lbs.).

Front door latch to door screws. . . 10N·m (7 ft. lbs.).

Front door striker to B pillar. . . . 28N·m (20 ft. lbs.).

Rear door latch to door screws. . 10N·m (95 in. lbs.).

Rear door striker to C pillar screws. . . . . 28N·m (250 in. lbs.).

Rear view mirror set screw. . . . . 1N·m (15 in. lbs.).

Lift gate latch striker to D pillar nuts. . . . . 10N·m (7 ft. lbs.).

Door latch adjustment screw. . . . . 3N·m (30 in. lbs.).

SPECIAL TOOLS

BODY

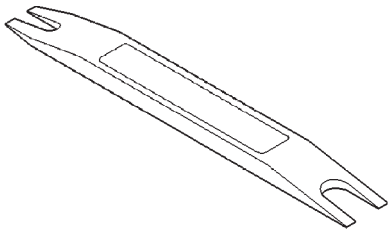

Remover, Moldings C-4829

DECKLID/HATCH/LIFTGATE/TAILGATE

TABLE OF CONTENTS

	page
EXTERIOR HANDLE	
REMOVAL	93
INSTALLATION	93
FLIP-UP GLASS	
REMOVAL	93
INSTALLATION	94
FLIP-UP GLASS LATCH	
REMOVAL	94
INSTALLATION	94
FLIP-UP GLASS LATCH STRIKER	
REMOVAL	95
INSTALLATION	95
FLIP-UP GLASS SWITCH	
REMOVAL	95
INSTALLATION	95
HINGE	
REMOVAL	95
INSTALLATION	95
LATCH	
REMOVAL	95
INSTALLATION	96
LATCH STRIKER	
REMOVAL	96
INSTALLATION	96
LIFTGATE	
REMOVAL	97
INSTALLATION	97
LIFTGATE ADJUSTMENT	97
TRIM PANEL	
REMOVAL	97
INSTALLATION	98
LIFTGATE INSULATOR	
REMOVAL	98
INSTALLATION	98

EXTERIOR HANDLE

REMOVAL

(1) Remove the liftgate trim panel refer to (Refer to 23 - BODY/DECKLID/HATCH/LIFTGATE/TAILGATE/TRIM PANEL - REMOVAL).

(2) Remove the latch, outside handle linkage, and power lock connector.

(3) Remove the fasteners attaching the outside handle to the liftgate.

(4) Remove the outside handle from the liftgate.

INSTALLATION

(1) Position the outside handle on the liftgate.

(2) Install the fasteners attaching outside handle to liftgate.

(3) Connect outside handle link and power lock connector.

(4) Install liftgate trim panel, refer to (Refer to 23 - BODY/DECKLID/HATCH/LIFTGATE/TAILGATE/TRIM PANEL - INSTALLATION).

FLIP-UP GLASS

REMOVAL

CAUTION: DO NOT DISCONNECT THE PROP ROD CYLINDERS WITH THE LIFTGATE FLIP UP GLASS CLOSED. THE PROP ROD PISTONS ARE OPERATED BY HIGH PRESSURE GAS. THIS PRESSURE COULD CAUSE DAMAGE AND/OR PERSONAL INJURY IF THEY ARE REMOVED WHILE THE PISTONS ARE COMPRESSED.

(1) Using a trim stick or other suitable device, separate the flip up glass hinge cover from the hinge on the liftgate (Fig. 1).

(2) Open liftgate flip up glass. Support the glass for ease of repair.

(3) Using a small flat blade or equivalent tool, gently pry open the locking caps on the end of the prop rods.

(4) Remove prop rod cylinders from ball studs.

(5) Lower the flip up glass.

(6) Remove hinge fasteners from liftgate.

(7) Separate flip up glass from liftgate.

FLIP-UP GLASS (Continued)

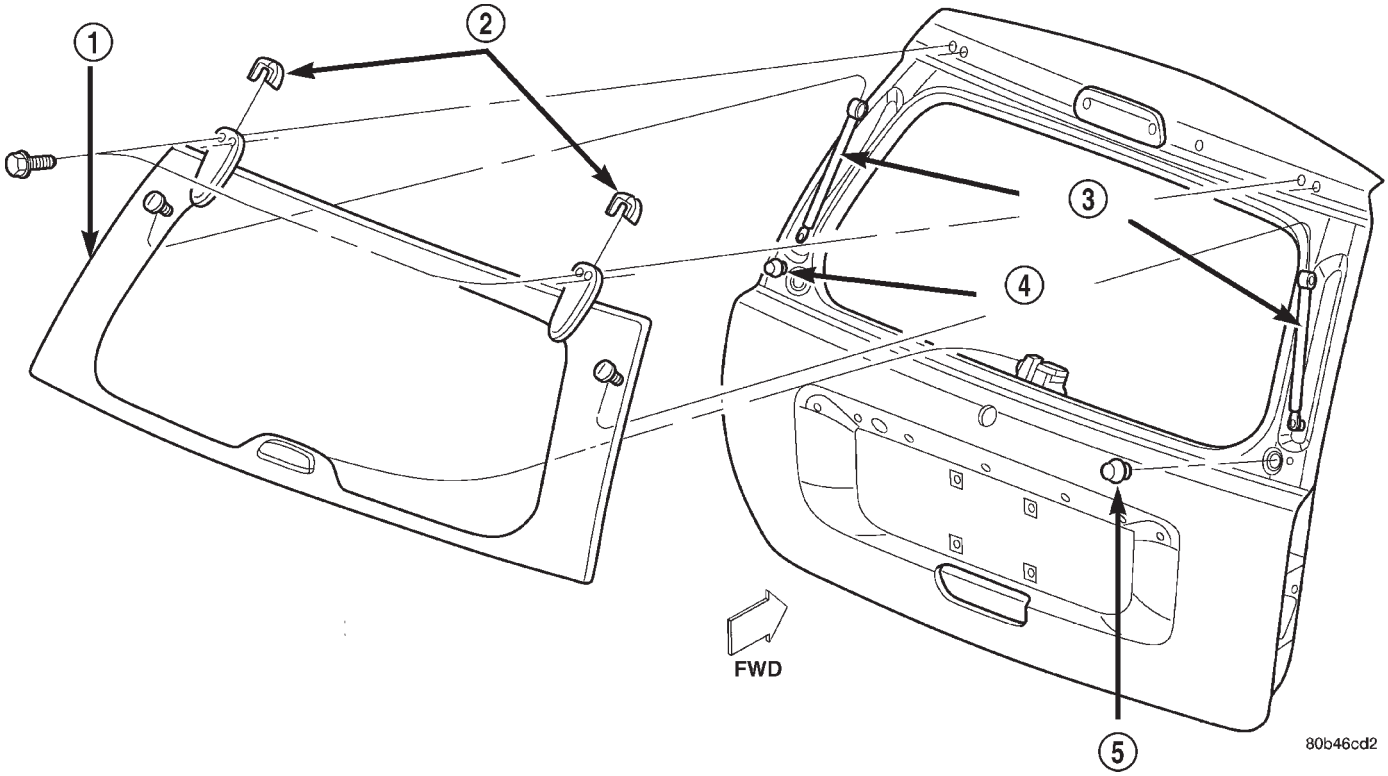

Fig. 1 Flip-Up Glass

1 - FLIP-UP GLASS
2 - HINGE COVER
3 - SUPPORT PROP
4 - BUMPER
5 - BUMPER

INSTALLATION

(1) Position flip up glass on liftgate.
(2) Install hinge fasteners, hand tight only.
(3) With the glass panel in the fully open position, fully raised position, push the glass forward to completely seat the hinges. Tighten hinge fasteners to 6N·m (60 in. lbs.).
(4) Install prop rods on ball studs and compress locking caps to lock rods on ball studs.
(5) Lower the flip up glass and install the flip up glass hinge cover.
(6) Check the flip up glass for proper alignment and latching.

FLIP-UP GLASS LATCH

REMOVAL

(1) Open liftgate flip up glass.
(2) Remove the trim panel (Refer to 23 - BODY/DECKLID/HATCH/LIFTGATE/TAILGATE/TRIM PANEL - REMOVAL).
(3) Remove latch (Fig. 2).
(4) Disconnect switch connectors.
(5) Remove latch from liftgate.

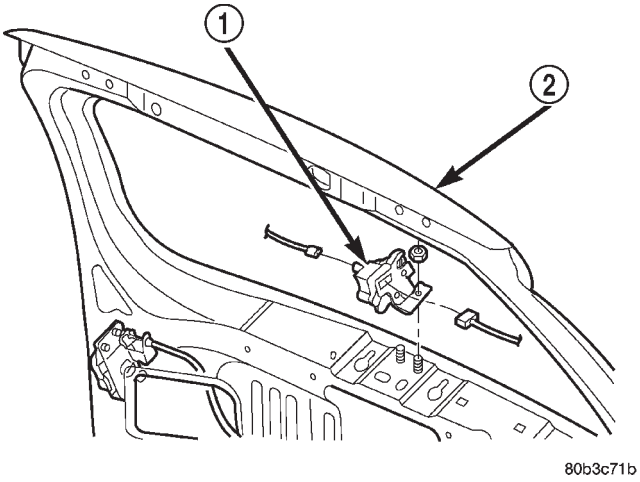

Fig. 2 Flip-up Glass Latch

1 - LATCH
2 - LIFTGATE

INSTALLATION

(1) Position the latch on the liftgate (Fig. 2).
(2) Connect switch connectors.
(3) Adjust latch to the proper position, and tighten the fasteners to 11 N·m (100 in. lbs.).

FLIP-UP GLASS LATCH (Continued)

(4) Close flip up glass panel and verify proper operation.

(5) Install liftgate trim panel, refer to (Refer to 23 - BODY/DECKLID/HATCH/LIFTGATE/TAILGATE/ TRIM PANEL - INSTALLATION).

FLIP-UP GLASS LATCH STRIKER

REMOVAL

(1) Raise flip up glass panel.

(2) Mark the position of the handle/striker on the glass panel.

(3) Remove the screws attaching the handle/striker to the glass.

INSTALLATION

(1) Position the handle/striker on the glass panel and align the reference marks.

(2) Install the screws attaching the handle/striker to the glass panel. Tighten the fasteners to 6 N·m (60 in. lbs.).

FLIP-UP GLASS SWITCH

REMOVAL

(1) Remove license plate lamp housing/trim panel from liftgate, refer to (Refer to 8 - ELECTRICAL/ LAMPS/LIGHTING - EXTERIOR/LICENSE PLATE LAMP UNIT - REMOVAL).

(2) Squeeze the locking tabs inward to release the switch from the housing.

(3) Disconnect the switch harness connector, remove the switch from the housing.

INSTALLATION

(1) Install switch harness connector.

(2) Position switch in housing, snap switch into place.

(3) Install license plate lamp housing/trim panel onto liftgate, refer to (Refer to 8 - ELECTRICAL/ LAMPS/LIGHTING - EXTERIOR/LICENSE PLATE LAMP UNIT - INSTALLATION).

HINGE

REMOVAL

NOTE: It is not necessary to remove the liftgate to replace one or both hinges. The hinges can be replaced one at a time.

(1) Open the liftgate. Support the liftgate for ease of repair.

(2) Remove the liftgate header trim panel.

(3) Mark the hinge location with a grease pencil or other suitable device.

(4) Remove the hinge screws (Fig. 5).

(5) Remove hinge.

INSTALLATION

NOTE: It is not necessary to remove the liftgate to replace one or both hinges. The hinges can be replaced one at a time.

(1) Position the hinge on the roof panel and on the liftgate. (Use 3M™ Fast and Firm or equivalent on the hinge to body mating surfaces as a sealant.

(2) Install and tighten hinge screws at roof panel to 28N·m (21 ft. lbs.).

(3) Install hinge screws at liftgate. Tighten screws to 28N·m (21 ft. lbs.).

(4) Install liftgate header trim panel.

(5) Check the liftgate for proper alignment and operation.

LATCH

REMOVAL

(1) Raise the liftgate.

(2) Remove the liftgate trim panel (Fig. 3).

(3) Disconnect the power connector.

(4) Disconnect the outside handle link from the latch.

(5) Remove the latch screws and remove latch.

LATCH (Continued)

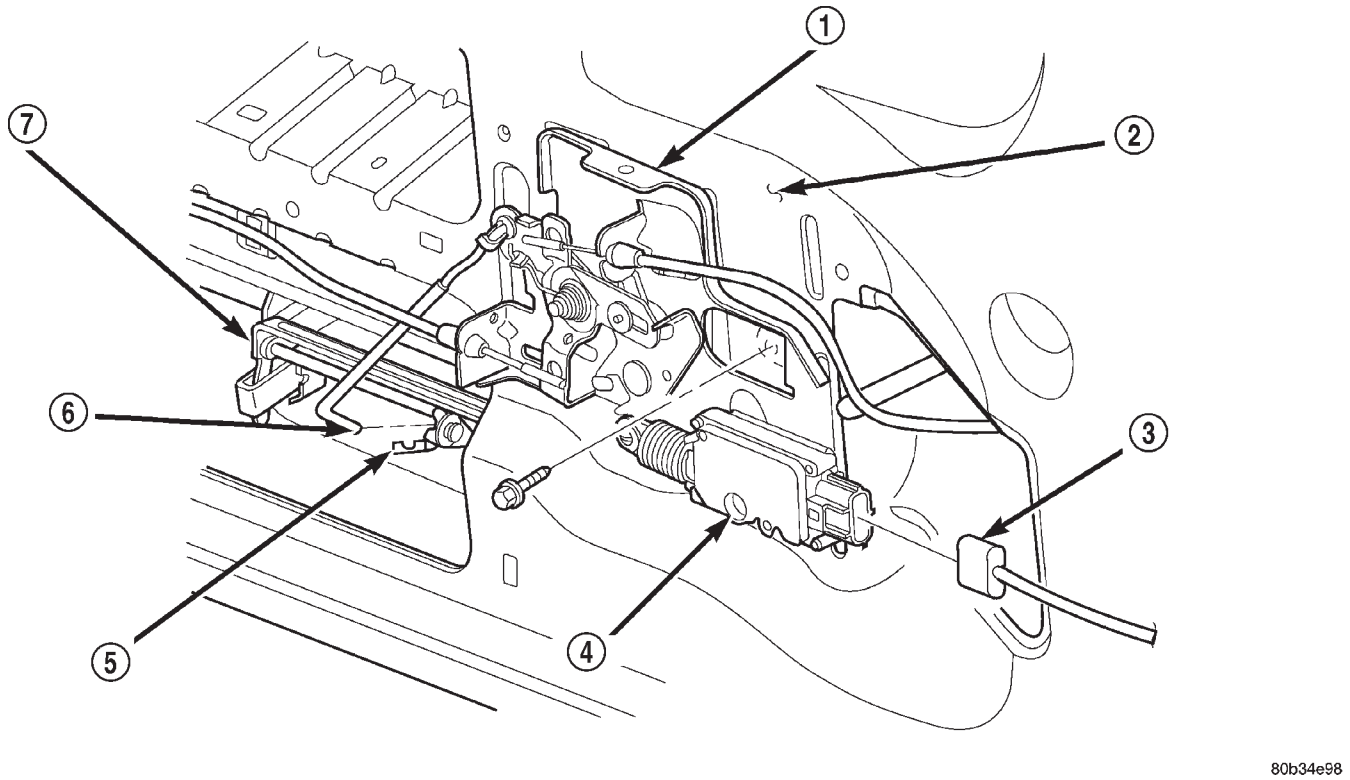

Fig. 3 Liftgate Latch

1 - LATCH
2 - LIFTGATE
3 - CONNECTOR
4 - ACTUATOR
5 - CLIP
6 - OUTSIDE HANDLE TO LATCH ROD
7 - OUTSIDE HANDLE

INSTALLATION

(1) Install the latch into the liftgate and tighten the screws to 7N·m (5 ft. lbs.).

(2) Connect the outside handle to the liftgate latch.

(3) Plug in the connector for the power .

(4) Install the liftgate trim panel.

LATCH STRIKER

REMOVAL

(1) Raise liftgate.

(2) Remove tail lamp, refer to (Refer to 8 - ELECTRICAL/LAMPS/LIGHTING - EXTERIOR/TAIL LAMP - REMOVAL).

(3) Remove nuts attaching striker to D-pillar (Fig. 4).

(4) Separate striker from D-pillar.

INSTALLATION

(1) Position striker on D-pillar.

(2) Install nuts attaching striker to D-pillar. Tighten nuts to 10 N·m (7 ft. lbs.) torque (Fig. 4).

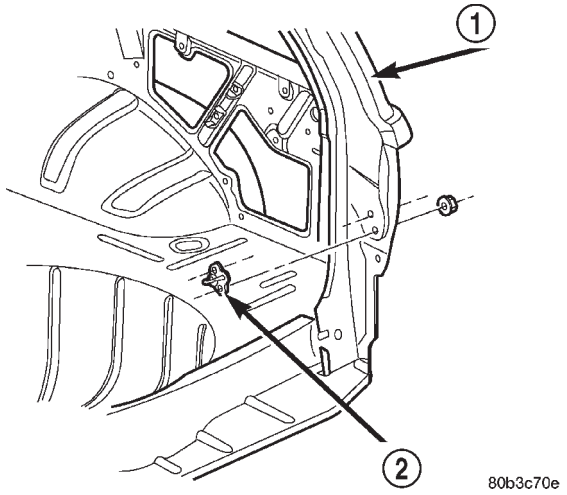

Fig. 4 Liftgate Latch Striker

1 - D-PILLAR
2 - STRIKER

(3) Install tail lamp (Refer to 8 - ELECTRICAL/LAMPS/LIGHTING - EXTERIOR/TAIL LAMP - INSTALLATION).

LIFTGATE

REMOVAL

CAUTION: DO NOT DISCONNECT THE SUPPORT ROD CYLINDERS WITH THE LIFTGATE CLOSED. THE SUPPORT ROD PISTONS ARE OPERATED BY HIGH PRESSURE GAS. THIS PRESSURE COULD CAUSE DAMAGE AND /OR PERSONAL INJURY IF THEY ARE REMOVED WHILE THE PISTONS ARE COMPRESSED.

(1) Open the liftgate. Support the liftgate for ease of repair.
(2) Remove the liftgate trim panel.
(3) Remove the prop rods from the liftgate.
(4) Unplug the wire harnesses and disconnect the washer hose.
(5) Mark the hinge location with a wax pencil or other suitable device (Fig. 5).
(6) Remove the hinge screws and remove liftgate from vehicle.

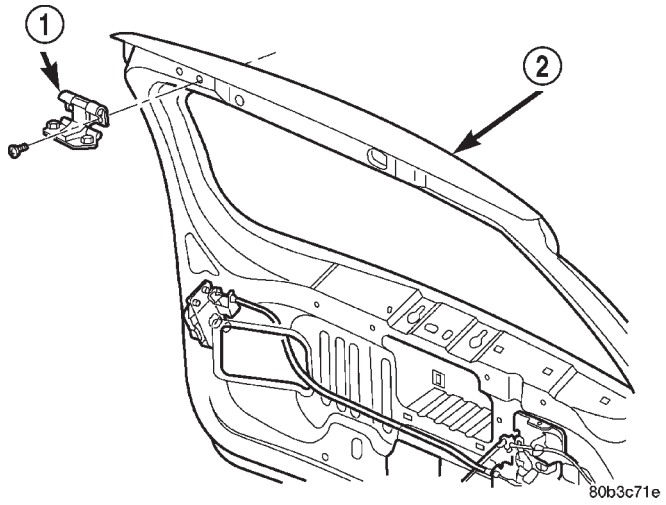

Fig. 5 Liftgate

1 - HINGE
2 - LIFTGATE

INSTALLATION

(1) Position the liftgate on the vehicle and align the witness marks.
(2) Install the hinge screws at liftgate. Tighten hinge screws to 28N·m (21ft. lbs.).
(3) Connect the wire harnesses and the washer hose.
(4) Install the trim panel.
(5) Install the prop rods.
(6) Close the liftgate and check for proper latching and alignment.

LIFTGATE ADJUSTMENT

The position of the liftgate can be adjusted upward or downward by the use of slots in the hinge. An inward or outward adjustment is achieved by use of slots in the body. If an inward or outward adjustment is needed, use 3M™ Fast and Firm or equivalent on the hinge to body mating surface as a sealant.

TRIM PANEL

REMOVAL - LIFTGATE TRIM PANEL

NOTE: The liftgate trim panel is attached with screws and spring clips.

(1) Raise the liftgate.
(2) Remove the screws securing the liftgate trim panel to the liftgate (Fig. 6).
(3) Disconnect the rear window defroster wires.
(4) Using a trim stick, or other suitable tool, pry the liftgate trim panel off the liftgate.

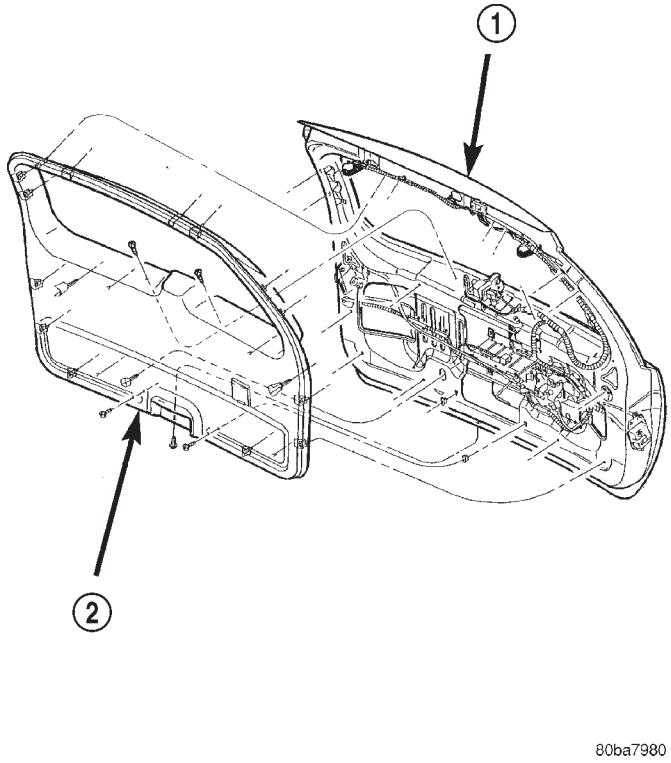

Fig. 6 Liftgate Trim Panel

1 - LIFTGATE
2 - LIFTGATE TRIM PANEL

TRIM PANEL (Continued)

REMOVAL - LOWER LIFTGATE OPENING TRIM PANEL

(1) Remove screws at outboard end of lower liftgate trim panel.

(2) Open the spare tire cover and remove the screws near the center of the lower liftgate trim panel (Fig. 7).

(3) Remove the lower liftgate trim panel.

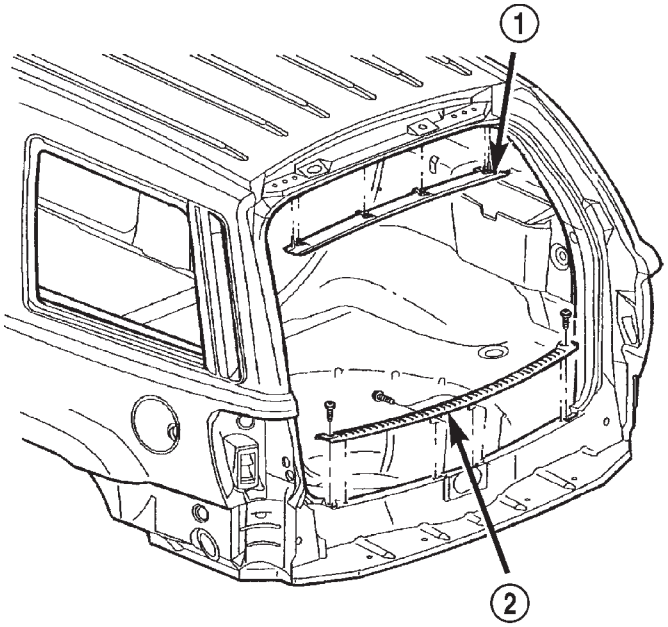

Fig. 7 Liftgate Opening Trim Panel

1 - UPPER LIFTGATE OPENING TRIM PANEL
2 - LOWER LIFTGATE OPENING TRIM PANEL

INSTALLATION - LIFTGATE TRIM PANEL

NOTE: The liftgate trim panel is attached with screws and spring clips.

(1) Align the liftgate trim panel spring clips and press the panel into the liftgate.

(2) Install the trim panel screws.

(3) Connect the rear defroster wires.

INSTALLATION - LOWER LIFTGATE OPENING TRIM PANEL

(1) Align the screw holes and locators to the holes in the liftgate opening.

(2) Install the screws in the liftgate opening trim panel.

(3) Install the spare tire cover.

LIFTGATE INSULATOR

REMOVAL

(1) Remove the liftgate trim panel, refer to (Refer to 23 - BODY/DECKLID/HATCH/LIFTGATE/TAILGATE/TRIM PANEL - REMOVAL).

(2) Separate the liftgate insulator from the liftgate and trim panel (Fig. 8).

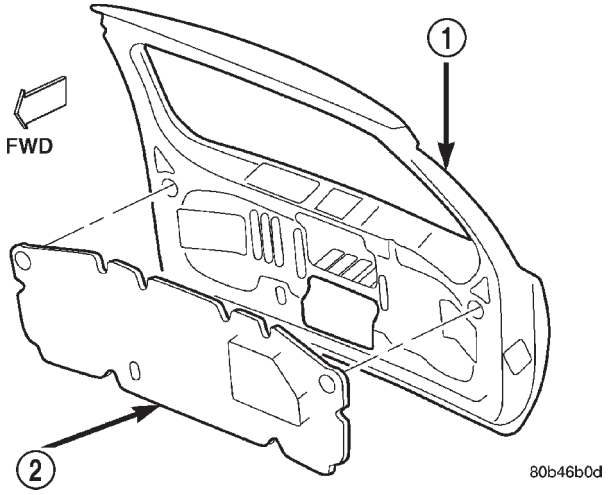

Fig. 8 Liftgate Insulator Pad

1 - LIFTGATE
2 - INSULATION PAD

INSTALLATION

(1) Thoroughly clean the area of any adhesive or insulation material.

(2) Install the insulator in the liftgate.

(3) Install the liftgate trim panel refer to (Refer to 23 - BODY/DECKLID/HATCH/LIFTGATE/TAILGATE/TRIM PANEL - INSTALLATION).

DOOR - FRONT

TABLE OF CONTENTS

	page
CHECK STRAP	
REMOVAL	99
INSTALLATION	99
DOOR	
REMOVAL	100
INSTALLATION	100
DOOR ADJUSTMENT	100
DOOR GLASS	
REMOVAL	100
INSTALLATION	100
EXTERIOR HANDLE	
REMOVAL	101
INSTALLATION	101
GLASS RUN CHANNEL	
REMOVAL	101
INSTALLATION	101
HINGE	
REMOVAL	102
INSTALLATION	102
INSIDE HANDLE ACTUATOR	
REMOVAL	103
INSTALLATION	103
LATCH	
REMOVAL	103
INSTALLATION	103
ADJUSTMENTS	103
LATCH STRIKER	
REMOVAL	104
INSTALLATION	104
LOCK CYLINDER	
REMOVAL	104
INSTALLATION	104
TRIM PANEL	
REMOVAL	104
INSTALLATION	105
WATERDAM	
REMOVAL	105
INSTALLATION	105
WINDOW REGULATOR	
REMOVAL	106
INSTALLATION	106

CHECK STRAP

REMOVAL

(1) Remove the waterdam, refer to (Refer to 23 - BODY/DOOR - FRONT/WATERDAM - REMOVAL).

(2) Remove speaker.

(3) Remove screws attaching door check to A-pillar.

(4) Remove nuts attaching door check to door (Fig. 1).

(5) Remove door check through speaker location hole.

INSTALLATION

(1) Position door check on door through speaker location hole (Fig. 1).

(2) Install nuts attaching door check to door.

(3) Install screws attaching door check to A-pillar.

(4) Install speaker.

(5) Install the waterdam, refer to (Refer to 23 - BODY/DOOR - FRONT/WATERDAM - INSTALLATION).

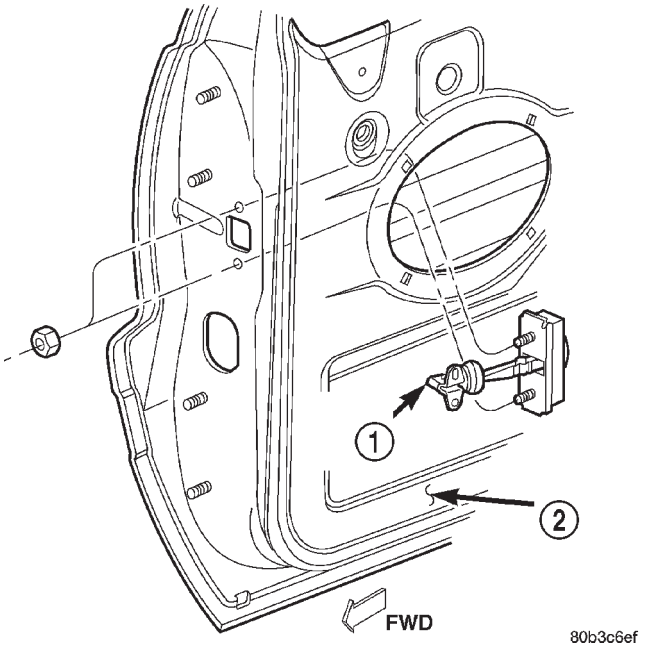

Fig. 1 Door Check

1 - DOOR CHECK
2 - FRONT DOOR

DOOR

REMOVAL

(1) Disconnect front door harness connector (Fig. 2).
(2) Support door with padded floor jack.
(3) Remove retaining clips from hinge pins.
(4) Tap out hinge pins.
(5) Separate door from vehicle.

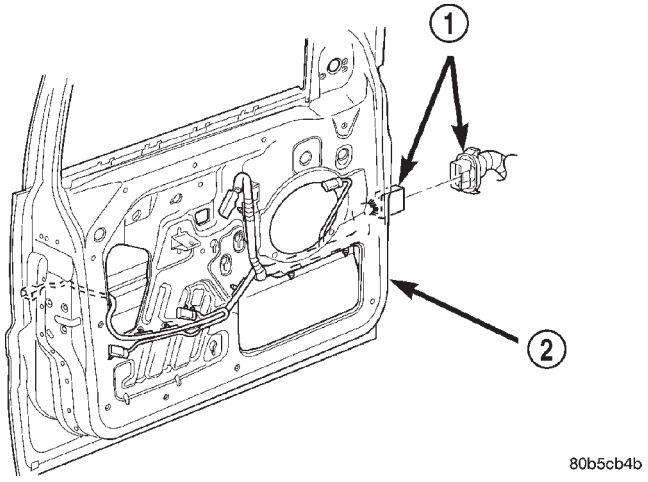

Fig. 2 Front Door Harness Connector

1 - HARNESS CONNECTOR
2 - DOOR

INSTALLATION

(1) Position door at vehicle and align hinges.
(2) Install hinge pins.
(3) Install retaining clips for hinge pins.
(4) Connect front door harness connector (Fig. 2).

DOOR ADJUSTMENT

Minor adjustment for alignment of the door is made by moving the latch striker.

IN AND OUT

(1) Loosen the latch striker.
(2) Tap the latch striker inward if the door character line is outboard of the body character line or tap the latch striker outward if the door character line is inboard of the body character line.
(3) Inspect the alignment. If correct, tighten striker to 28 N·m (21 ft. lbs.) .

UP AND DOWN

(1) Loosen the latch striker.
(2) Tap the latch striker downward if the door character line is higher than the body character line or tap the latch striker upward if the door character line is lower than the body character line.
(3) Inspect the alignment. If correct, tighten to 28 N·m (21 ft. lbs.).

DOOR GLASS

REMOVAL

(1) Locate glass to full down position.
(2) Remove the waterdam, refer to (Refer to 23 - BODY/DOOR - FRONT/WATERDAM - REMOVAL).
(3) Remove inner belt weatherstrip, refer to (Refer to 23 - BODY/WEATHERSTRIP/SEALS/FDR INNER BELT WEATHERSTRIP - REMOVAL).
(4) Remove outer belt weatherstrip, refer to (Refer to 23 - BODY/WEATHERSTRIP/SEALS/FDR OUTER BELT WEATHERSTRIP - REMOVAL).
(5) Locate glass to 3/4 up position.
(6) Using a long flat blade or hook type tool, disengage clips (Fig. 3) attaching glass retainer to glass lift plate.
(7) Carefully push bottom of glass panel outward to disengage glass retainer studs from lift plate (Fig. 4).
(8) Lift glass upward and out of door.

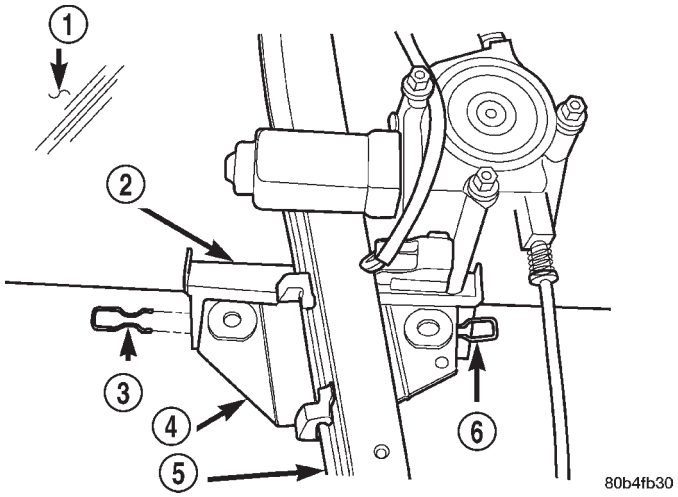

Fig. 3 Front Door Glass Clips

1 - GLASS
2 - RETAINER
3 - CLIP
4 - LIFT PLATE
5 - REGULATOR
6 - CLIP

INSTALLATION

(1) Lower glass into position.
(2) Carefully align glass retainer studs with lift plate and insert studs into lift plate.
(3) Engage clips attaching glass retainer to glass lift plate.
(4) Locate glass to full down position.
(5) Install outer belt weatherstrip, (Refer to 23 - BODY/WEATHERSTRIP/SEALS/FDR OUTER BELT WEATHERSTRIP - INSTALLATION).

DOOR GLASS (Continued)

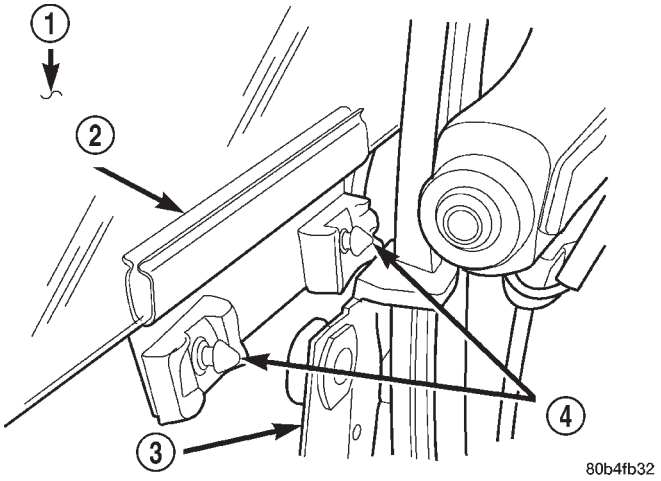

Fig. 4 Front Door Glass Retainer

1 - GLASS
2 - RETAINER
3 - LIFT PLATE
4 - STUD

(6) Install inner belt weatherstrip, (Refer to 23 - BODY/WEATHERSTRIP/SEALS/FDR INNER BELT WEATHERSTRIP - INSTALLATION).

(7) Install waterdam, refer to (Refer to 23 - BODY/DOOR - FRONT/WATERDAM - INSTALLATION).

EXTERIOR HANDLE

REMOVAL

(1) Remove glass run channel, refer to (Refer to 23 - BODY/DOOR - FRONT/GLASS RUN CHANNEL - REMOVAL).

(2) Disconnect lock cylinder to latch rod.

(3) Disconnect outside handle to latch rod

(4) Remove fasteners attaching outside handle to door (Fig. 5).

(5) Remove outside handle from door.

(6) Disconnect anti-theft harness connector, if equipped.

(7) Separate outside handle from vehicle.

INSTALLATION

(1) Position outside handle at door (Fig. 5).

(2) Connect anti-theft harness connector, if equipped.

(3) Position outside handle in door.

(4) Install fasteners attaching outside handle to door.

(5) Connect outside handle to latch rod

(6) Connect lock cylinder to latch rod.

(7) Install glass run channel, refer to (Refer to 23 - BODY/DOOR - FRONT/GLASS RUN CHANNEL - INSTALLATION).

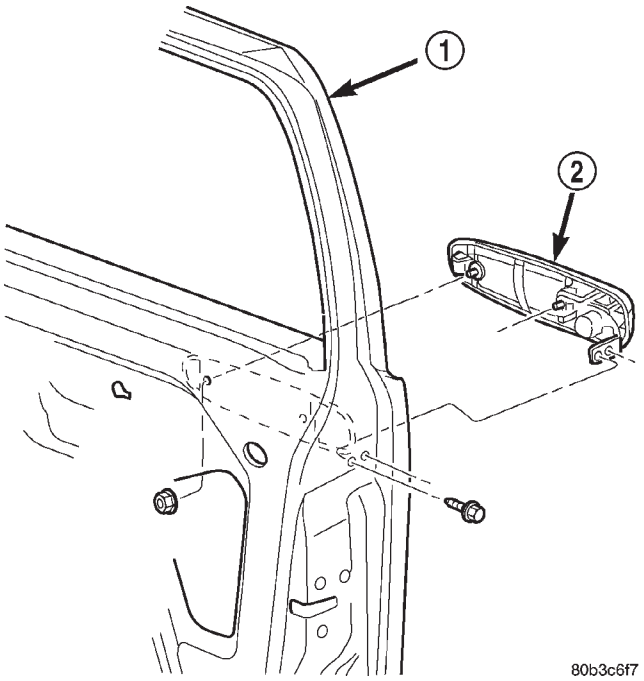

Fig. 5 Front Door Outside Handle

1 - DOOR
2 - OUTSIDE HANDLE

GLASS RUN CHANNEL

REMOVAL

NOTE: Only the rearward glass run channel is serviceable.

(1) Remove the waterdam, refer to (Refer to 23 - BODY/DOOR - FRONT/WATERDAM - REMOVAL).

(2) Remove inner belt weatherstrip, refer to (Refer to 23 - BODY/WEATHERSTRIP/SEALS/FDR INNER BELT WEATHERSTRIP - REMOVAL).

(3) Remove outer belt weatherstrip, refer to (Refer to 23 - BODY/WEATHERSTRIP/SEALS/FDR OUTER BELT WEATHERSTRIP - REMOVAL).

(4) Remove bolt attaching run channel to inner door panel (Fig. 6).

(5) Peel back glass run channel weatherstrip on rear run channel.

(6) Pull glass run channel downward to separate from door.

(7) Remove glass run channel from door.

INSTALLATION

(1) Position glass run channel in door (Fig. 6).

(2) Align glass run channel with door frame run channel and slide channel upward to secure door.

(3) Press glass run channel weatherstrip into rear run channel.

GLASS RUN CHANNEL (Continued)

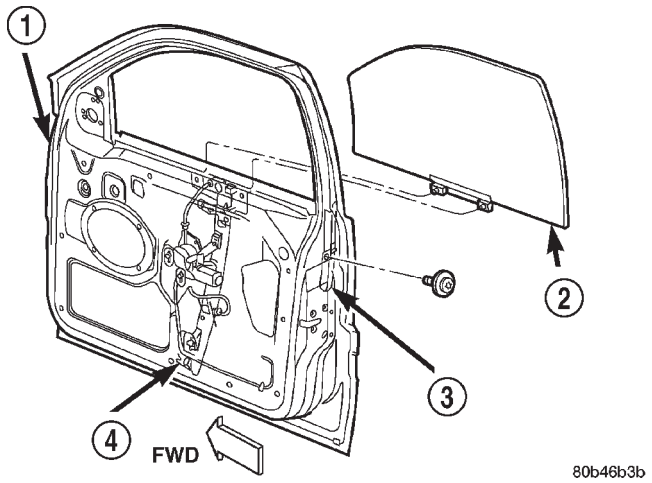

Fig. 6 Front Door Glass Run Channel

1 - DOOR
2 - GLASS
3 - GLASS RUN CHANNEL
4 - REGULATOR

(4) Install bolt attaching run channel to inner door panel.

(5) Install outer belt weatherstrip, (Refer to 23 - BODY/WEATHERSTRIP/SEALS/FDR OUTER BELT WEATHERSTRIP - INSTALLATION).

(6) Install inner belt weatherstrip, (Refer to 23 - BODY/WEATHERSTRIP/SEALS/FDR INNER BELT WEATHERSTRIP - INSTALLATION).

(7) Install the waterdam, (Refer to 23 - BODY/DOOR - FRONT/WATERDAM - INSTALLATION).

HINGE

REMOVAL

(1) Open and support door.

(2) Using a wax pencil, or other suitable device, reference mark the hinge placement

(3) Disconnect the door wire harness.

(4) Remove the door check from the “A” pillar (Fig. 7).

(5) Remove the fasteners retaining the door hinge to the door (Fig. 8).

(6) Remove the door.

(7) Remove the hinge from the “A” pillar.

INSTALLATION

(1) Position hinge on “A” pillar. (Use 3M® Fast and Firm or equivalent on the hinge to body mating surface as a sealant.)

(2) Install hinge to body bolts, but do not tighten.

(3) Align the hinge to the reference marks and torque the bolts to 35N·m (26 ft. lbs.).

(4) Install the door on the hinge and align with the reference marks.

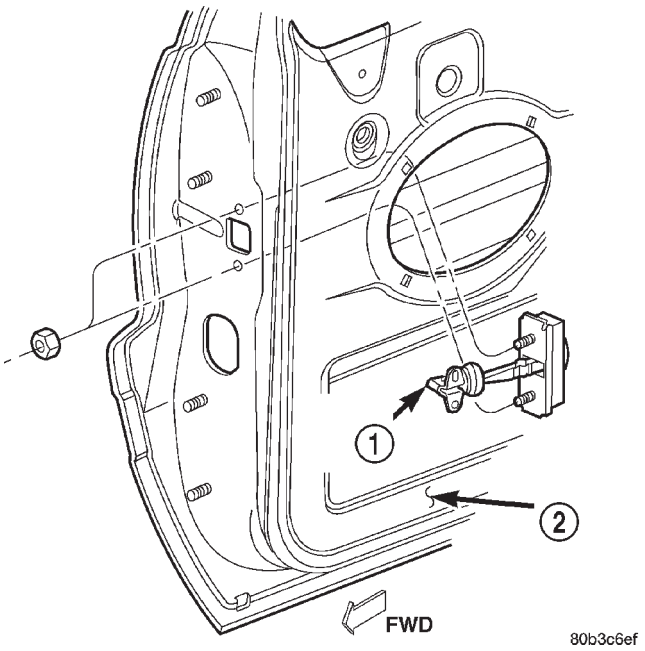

Fig. 7 Front Door Check

1 - DOOR CHECK
2 - FRONT DOOR

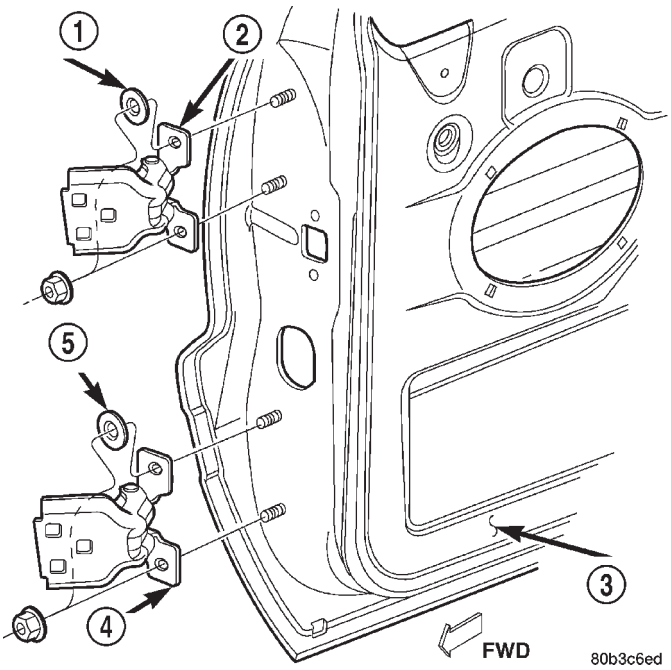

Fig. 8 Front Door Hinges

1 - WASHER
2 - UPPER HINGE
3 - FRONT DOOR
4 - LOWER HINGE
5 - WASHER

(5) Tighten the door to hinge fasteners.

(6) For adjustment see door adjustment procedure.

INSIDE HANDLE ACTUATOR

REMOVAL

(1) Remove door trim panel, refer to (Refer to 23 - BODY/DOOR - FRONT/TRIM PANEL - REMOVAL).

(2) Disconnect latch and lock rods from inside handle actuator.

(3) Remove screws attaching inside handle actuator to trim panel (Fig. 9).

(4) Separate inside handle actuator from trim panel.

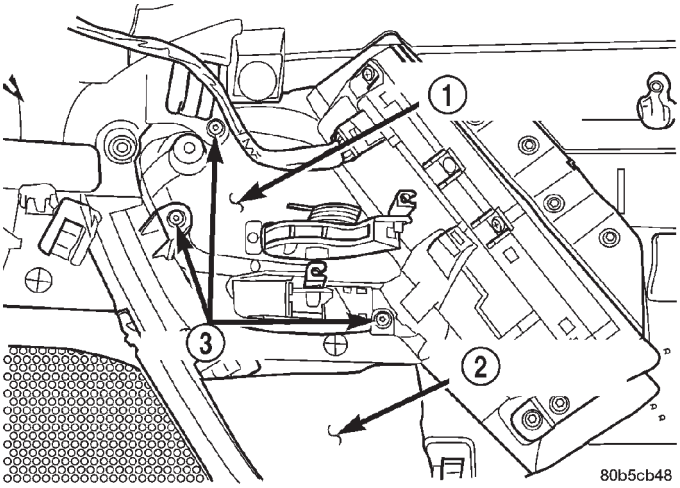

Fig. 9 Front Door Inside Handle Actuator

1 - INSIDE HANDLE ACTUATOR
2 - DRIVER'S DOOR TRIM PANEL
3 - SCREW

INSTALLATION

(1) Position inside handle actuator in trim panel.

(2) Install screws attaching inside handle actuator to trim panel (Fig. 9).

(3) Connect latch and lock rods to inside handle actuator.

(4) Install door trim panel, refer to (Refer to 23 - BODY/DOOR - FRONT/TRIM PANEL - INSTALLATION).

LATCH

REMOVAL

(1) Remove glass run channel, refer to (Refer to 23 - BODY/DOOR - FRONT/GLASS RUN CHANNEL - REMOVAL).

(2) Remove screws attaching door latch to door (Fig. 10).

(3) Disconnect all rods from door latch.

(4) Disconnect wire harness connector, if equipped.

(5) Separate door latch from door.

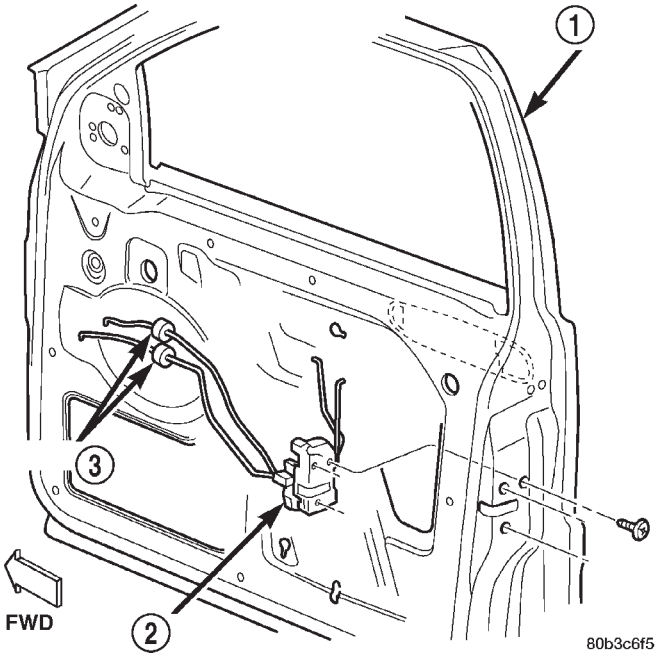

Fig. 10 Door Latch

1 - DOOR
2 - LATCH
3 - ISOLATOR

INSTALLATION

(1) Position door latch at door.

(2) Connect wire harness connector, if equipped.

(3) Connect all rods to door latch.

(4) Install screws attaching door latch to door. Tighten screws to 10 N·m (7 ft. lbs.) torque (Fig. 10).

(5) Install glass run channel, refer to (Refer to 23 - BODY/DOOR - FRONT/GLASS RUN CHANNEL - INSTALLATION).

ADJUSTMENT

DOOR LATCH ADJUSTMENT

(1) Locate access hole (Fig. 11).

(2) Insert a 5/32-inch hex-wrench through hole and into adjustment screw. Loosen screw.

(3) Operate outside handle button several times to release any restriction because of mis-alignment.

(4) Tighten adjustment screw to 3 N·m (30 in-lbs) torque.

(5) Test handle button and lock cylinder for proper operation.

LATCH (Continued)

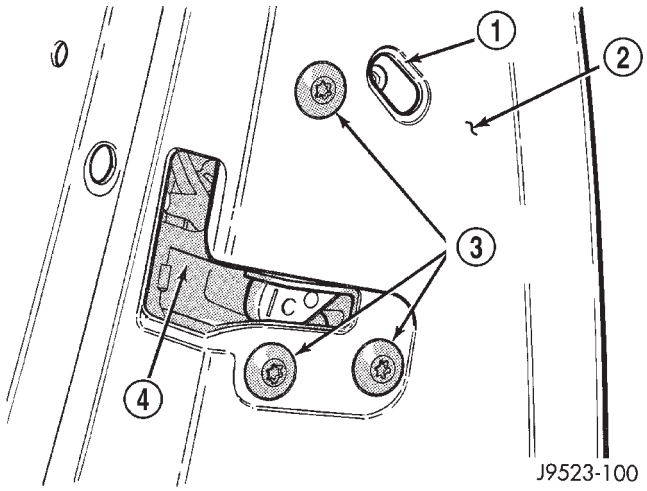

Fig. 11 Door Latch Adjustment

1 - ACCESS HOLE
2 - DOOR
3 - LATCH MOUNTING BOLTS
4 - LATCH

LATCH STRIKER

REMOVAL

(1) Remove screws attaching striker to B-pillar.

(2) Separate striker and spacer from B-pillar (Fig. 12).

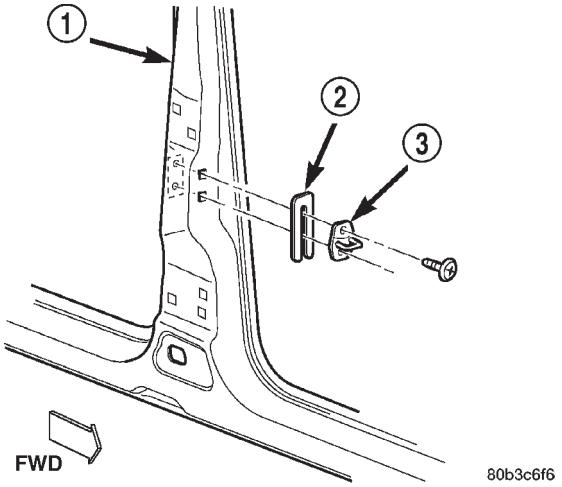

Fig. 12 Front Door Latch Striker

1 - B-PILLAR
2 - SPACER
3 - STRIKER

INSTALLATION

(1) Position striker and spacer on B-pillar.

(2) Install screws attaching striker to B-pillar. Tighten screws to 28 N·m (20 ft. lbs.) torque (Fig. 12).

LOCK CYLINDER

REMOVAL

(1) Remove outside door handle, refer to (Refer to 23 - BODY/DOOR - FRONT/EXTERIOR HANDLE - REMOVAL).

(2) Remove screw securing lock cylinder retainer to outside door handle (Fig. 13).

(3) Separate lock cylinder from door handle.

(4) Disconnect lock cylinder switch, if equipped.

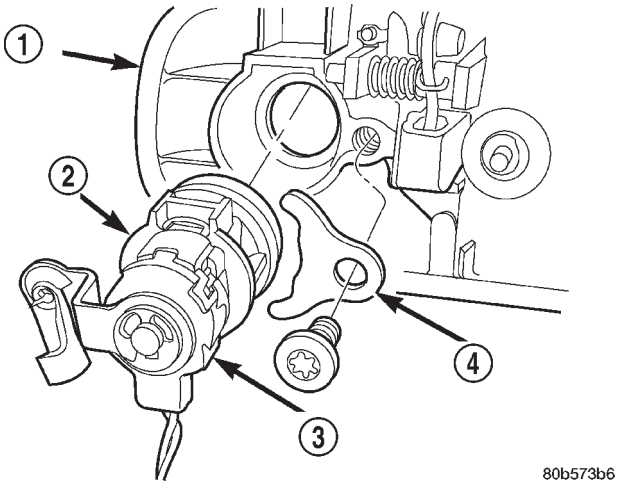

Fig. 13 Front Door Lock Cylinder

1 - OUTSIDE DOOR HANDLE
2 - LOCK CYLINDER
3 - ANTI-THEFT SWITCH
4 - RETAINER

INSTALLATION

(1) Connect lock cylinder switch, if equipped.

(2) Position lock cylinder in door handle.

(3) Position lock cylinder retainer and install screw (Fig. 13).

(4) Install outside door handle, refer to (Refer to 23 - BODY/DOOR - FRONT/EXTERIOR HANDLE - INSTALLATION).

TRIM PANEL

REMOVAL

(1) Remove trim plug from mirror flag bezel.

(2) Remove screws attaching trim panel to door (Fig. 14).

(3) Using trim remover (C-4829 or equivalent), detach trim panel perimeter push-in fasteners from door inner panel.

(4) Lift trim panel upward and separate from door.

(5) If equipped, disconnect harness connectors for power accessories.

TRIM PANEL (Continued)

(6) Disconnect latch rods from inside handle actuator.

(7) Separate trim panel from vehicle.

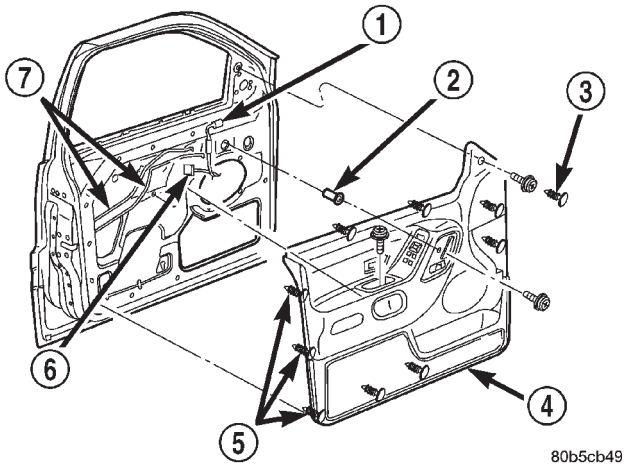

Fig. 14 Front Door Trim Panel

1 - HARNESS CONNECTOR
2 - NUTSERT
3 - TRIM PLUG
4 - TRIM PANEL
5 - PUSH-IN FASTENER
6 - HARNESS CONNECTOR
7 - LATCH RODS

INSTALLATION

(1) Connect latch rods to inside handle actuator.

(2) If equipped, connect harness connectors to power accessories.

(3) Position trim panel on door inner panel.

(4) Press trim panel push-in fasteners inward around perimeter of door.

(5) Install screws attaching trim panel to door (Fig. 14).

(6) Install trim plug in mirror flag bezel.

WATERDAM

REMOVAL

(1) Remove door trim panel, refer to (Refer to 23 - BODY/DOOR - FRONT/TRIM PANEL - REMOVAL).

(2) Peel the waterdam from door.

(3) Route all harnesses and linkage rods through waterdam as necessary.

(4) Separate waterdam from door (Fig. 15).

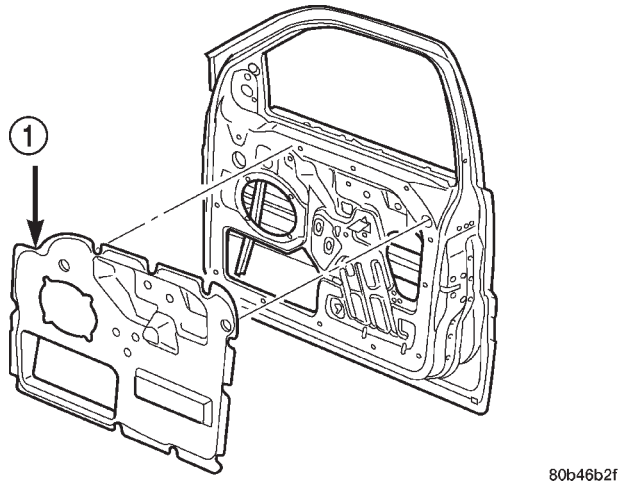

Fig. 15 Front Door Waterdam

1 - INSULATOR PAD

INSTALLATION

(1) Waterdam contact surface must be free of contaminants. Clean as necessary.

(2) Route all harnesses and linkage rods through waterdam as necessary.

(3) Position waterdam on door and align all holes.

(4) Press waterdam on door (Fig. 15).

(5) Install door trim panel, refer to (Refer to 23 - BODY/DOOR - FRONT/TRIM PANEL - INSTALLATION).

WINDOW REGULATOR

REMOVAL

(1) Remove front door glass, refer to (Refer to 23 - BODY/DOOR - FRONT/DOOR GLASS - REMOVAL).

(2) Loosen bolts attaching regulator to inner door panel (Fig. 16).

(3) Remove bolt attaching regulator to inner door panel (Fig. 17).

(4) Lift regulator upward to disengage bolts from door inner panel.

(5) Disengage power window regulator harness connector, if equipped.

(6) Remove regulator through access hole in door.

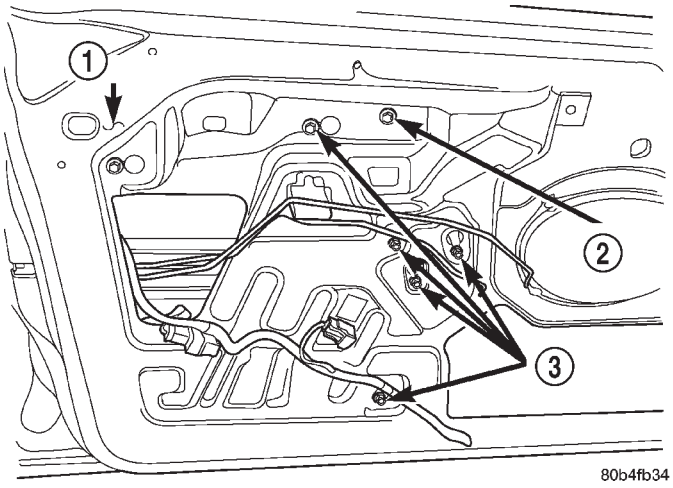

Fig. 16 Front Door Regulator Bolts

1 - FRONT DOOR
2 - REMOVE BOLT
3 - LOOSEN BOLTS

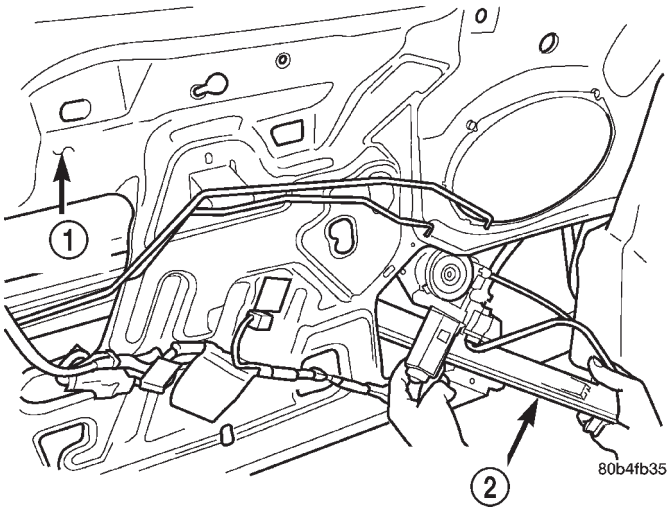

Fig. 17 Front Door Window Regulator

1 - FRONT DOOR
2 - REGULATOR

INSTALLATION

(1) Position regulator in door through access hole.

(2) Engage power window regulator harness connector, if equipped.

(3) Lift regulator upward and engage bolts in door inner panel key hole slots.

(4) Install bolt attaching regulator to inner door panel.

(5) Tighten bolts attaching regulator to inner door panel.

(6) Install front door glass, refer to (Refer to 23 - BODY/DOOR - FRONT/GLASS RUN CHANNEL - INSTALLATION).

DOORS - REAR

TABLE OF CONTENTS

	page
CHECK STRAP	
REMOVAL	107
INSTALLATION	107
DOOR	
REMOVAL	108
INSTALLATION	108
DOOR GLASS	
REMOVAL	108
INSTALLATION	108
EXTERIOR HANDLE	
REMOVAL	108
INSTALLATION	109
HINGE	
REMOVAL	109
INSTALLATION	109
INSIDE HANDLE ACTUATOR	
REMOVAL	109
INSTALLATION	109
LATCH	
REMOVAL	110
INSTALLATION	110
LATCH STRIKER	
REMOVAL	110
INSTALLATION	110
TRIM PANEL	
REMOVAL	111
INSTALLATION	111
WATERDAM	
REMOVAL	111
INSTALLATION	111
WINDOW REGULATOR	
REMOVAL	112
INSTALLATION	112

CHECK STRAP

REMOVAL

(1) Remove waterdam, refer to (Refer to 23 - BODY/DOORS - REAR/WATERDAM - REMOVAL).

(2) Remove speaker.

(3) Remove screws attaching door check to B-pillar.

(4) Remove nuts attaching door check to door (Fig. 1).

(5) Remove door check through speaker location hole.

INSTALLATION

(1) Position door check on door through speaker location hole.

(2) Install nuts attaching door check to door (Fig. 1).

(3) Install screws attaching door check to B-pillar.

(4) Install speaker.

(5) Install waterdam, refer to (Refer to 23 - BODY/DOORS - REAR/WATERDAM - INSTALLATION).

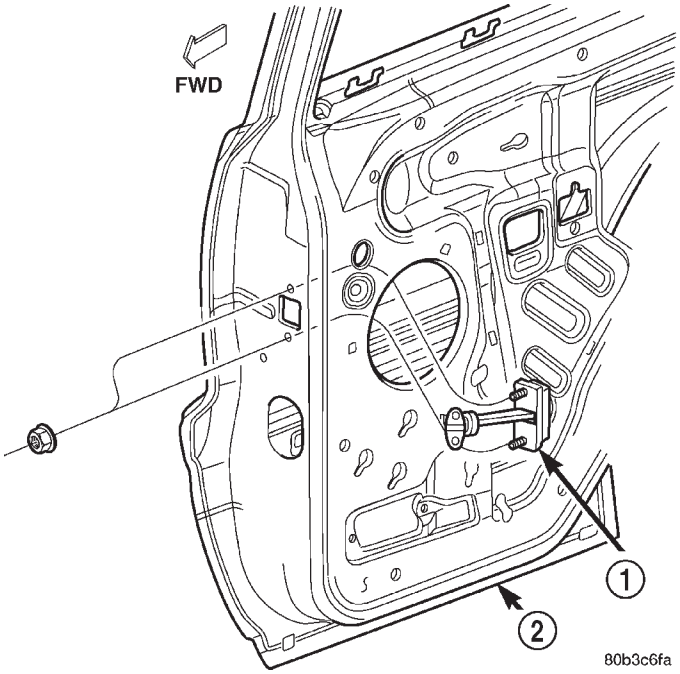

Fig. 1 Door Check

1 - DOOR CHECK
2 - REAR DOOR

DOOR

REMOVAL

(1) Disconnect rear door harness connector (Fig. 2).
(2) Support door with padded floor jack.
(3) Remove retaining clips from hinge pins.
(4) Tap out hinge pins.
(5) Separate door from vehicle.

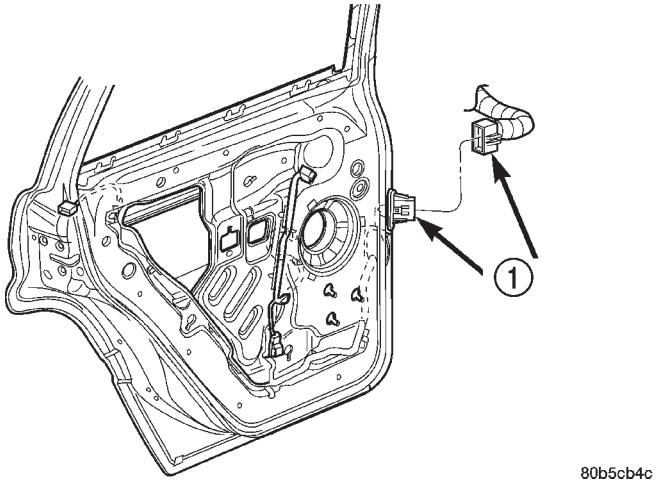

Fig. 2 Rear Door Harness Connector

1 - HARNESS CONNECTOR

INSTALLATION

(1) Position door at vehicle and align hinges.
(2) Install hinge pins.
(3) Install retaining clips for hinge pins.
(4) Connect rear door harness connector (Fig. 2).

DOOR GLASS

REMOVAL

(1) Remove waterdam, refer to (Refer to 23 - BODY/DOORS - REAR/WATERDAM - REMOVAL).
(2) Remove inner belt weatherstrip, refer to (Refer to 23 - BODY/WEATHERSTRIP/SEALS/RDR INNER BELT WEATHERSTRIP - REMOVAL).
(3) Remove stationary glass, refer to (Refer to 23 - BODY/STATIONARY GLASS/DOOR GLASS - REMOVAL).
(4) Disengage clips attaching window glass to lift plate.
(5) Press studs out of lift plate.
(6) Lift window glass from door (Fig. 3).

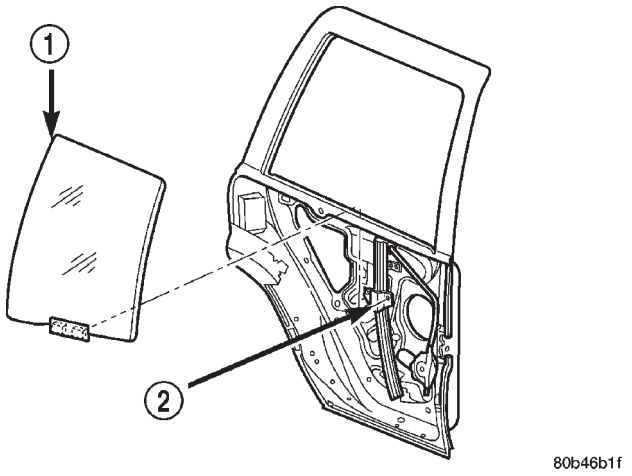

Fig. 3 Glass Channel

1 - GLASS
2 - REGULATOR

INSTALLATION

(1) Position window glass in door (Fig. 3).
(2) Engage studs into lift plate.
(3) Engage clips attaching window glass to lift plate.
(4) Install stationary glass, refer to (Refer to 23 - BODY/STATIONARY GLASS/DOOR GLASS - INSTALLATION).
(5) Install inner belt weatherstrip, refer to (Refer to 23 - BODY/WEATHERSTRIP/SEALS/RDR INNER BELT WEATHERSTRIP - INSTALLATION).
(6) Install waterdam, refer to (Refer to 23 - BODY/DOORS - REAR/WATERDAM - INSTALLATION).

EXTERIOR HANDLE

REMOVAL

(1) Remove waterdam, refer to (Refer to 23 - BODY/DOORS - REAR/WATERDAM - REMOVAL).
(2) Locate glass to full up position.
(3) Disconnect lock knob to latch rod.
(4) Disconnect outside handle to latch rod.
(5) Remove fasteners attaching outside handle to door (Fig. 4).
(6) Remove outside handle from door.
(7) Separate outside handle from vehicle.

EXTERIOR HANDLE (Continued)

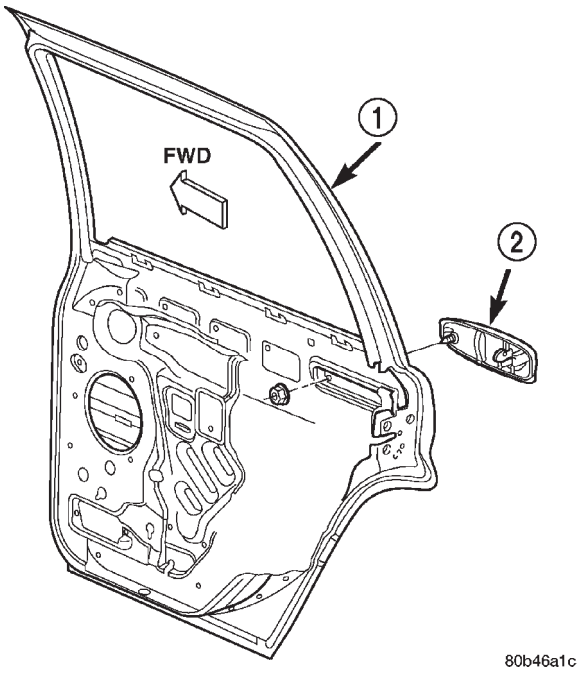

Fig. 4 Front

1 - DOOR
2 - OUTSIDE HANDLE

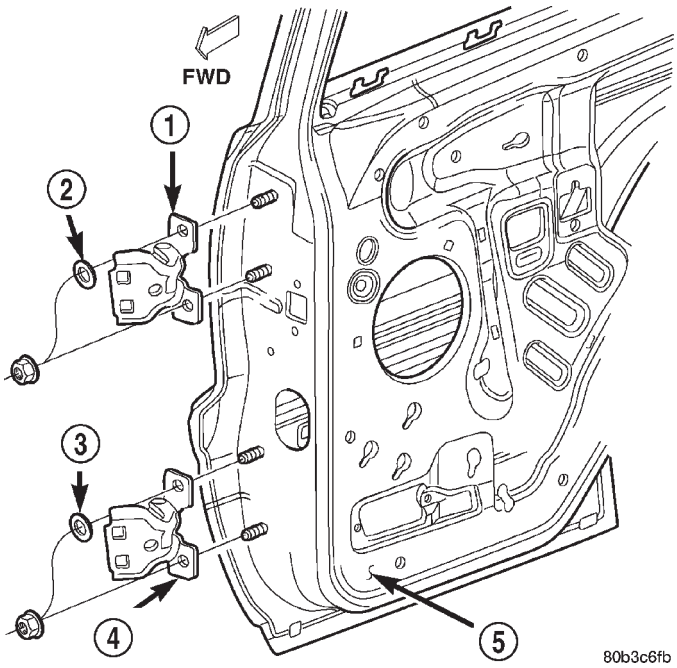

Fig. 5 Rear Door Hinge

1 - UPPER HINGE
2 - WASHER
3 - WASHER
4 - LOWER HINGE
5 - REAR DOOR

INSTALLATION

(1) Position outside handle in door.
(2) Install fasteners attaching outside handle to door (Fig. 4).
(3) Connect outside handle to latch rod.
(4) Connect lock knob to latch rod.
(5) Locate glass to full down position.
(6) Install waterdam, refer to (Refer to 23 - BODY/DOORS - REAR/WATERDAM - INSTALLATION).

HINGE

REMOVAL

(1) Open front door and rear door.
(2) Reference mark hinges for installation (Fig. 5).
(3) Support rear door for removal of hinges.
(4) Remove B pillar trim.
(5) Remove nuts holding door to hinge.
(6) Remove door.
(7) Remove bolts holding hinge to B pillar.

INSTALLATION

(1) Install hinge on B pillar and align reference marks (Fig. 5).
(2) Install bolts holding hinge to B pillar. Tighten bolts to 35N·m (23 ft. lbs.).
(3) Install door on hinge and align reference marks. Install bolts and tighten to 35N·m (26 ft. lbs.).
(4) Check door for fit and ease of operation. Adjust as necessary, refer to (Refer to 23 - BODY/DOOR - FRONT/DOOR - ADJUSTMENTS).
(5) Install B pillar trim.

INSIDE HANDLE ACTUATOR

REMOVAL

(1) Remove door trim panel, refer to (Refer to 23 - BODY/DOORS - REAR/TRIM PANEL - REMOVAL).
(2) Disconnect latch and lock rods from inside handle actuator.
(3) Remove screws attaching inside handle actuator to trim panel (Fig. 6).
(4) Separate inside handle actuator from trim panel.

INSTALLATION

(1) Position inside handle actuator in trim panel.
(2) Install screws attaching inside handle actuator to trim panel (Fig. 6).
(3) Connect latch and lock rods to inside handle actuator.
(4) Install door trim panel, refer to (Refer to 23 - BODY/DOORS - REAR/TRIM PANEL - INSTALLATION).

INSIDE HANDLE ACTUATOR (Continued)

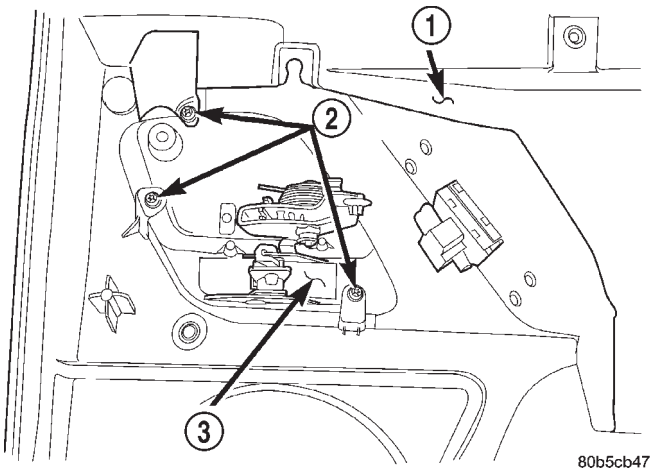

Fig. 6 Rear Door Inside Handle Actuator

1 - REAR DOOR TRIM PANEL
2 - SCREW
3 - INSIDE HANDLE ACTUATOR

LATCH

REMOVAL

(1) Remove waterdam, refer to (Refer to 23 - BODY/DOORS - REAR/WATERDAM - REMOVAL).
(2) Remove screws attaching latch to door (Fig. 7).
(3) Disconnect rods from door latch.
(4) Separate door latch from door.

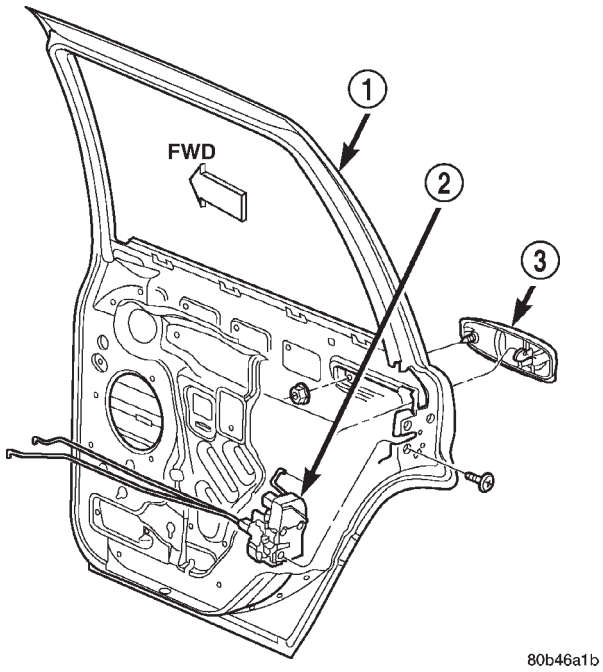

Fig. 7 Rear Door Latch

1 - DOOR
2 - LATCH
3 - OUTSIDE HANDLE

INSTALLATION

(1) position latch in door.
(2) Connect rods to door latch.
(3) Install screws attaching latch to door. Tighten screws to 10 N·m (95 in. lbs.) torque (Fig. 7).
(4) Install waterdam, refer to (Refer to 23 - BODY/DOORS - REAR/WATERDAM - INSTALLATION).

LATCH STRIKER

REMOVAL

(1) Remove screws attaching striker to C-pillar (Fig. 8).
(2) Separate striker and spacer from vehicle.

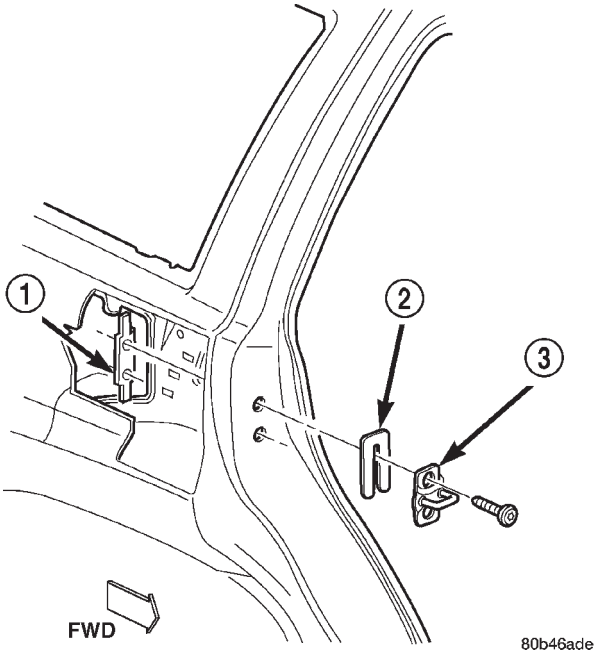

Fig. 8 Rear Door Latch Striker

1 - TAPPING PLATE
2 - SPACER
3 - STRIKER

INSTALLATION

(1) Position striker and spacer on C-pillar.
(2) Install screws. Tighten to 28 N·m (250 in. lbs.) torque.

TRIM PANEL

REMOVAL

(1) Remove screws attaching trim panel to door (Fig. 9).

(2) Using trim remover (C-4829 or equivalent), detach trim panel perimeter push-in fasteners from door inner panel.

(3) Lift trim panel upward and separate from door.

(4) If equipped, disconnect harness connectors for power accessories.

(5) Disconnect latch rods from inside handle actuator.

(6) Separate trim panel from vehicle.

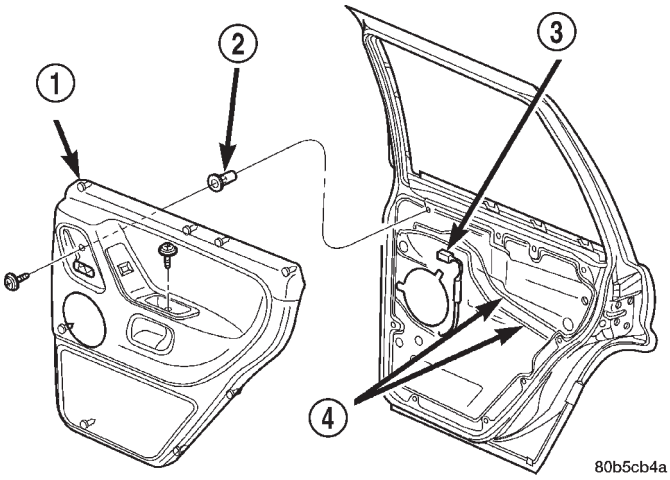

Fig. 9 Rear Door Trim Panel

1 - TRIM PANEL
2 - NUTSERT
3 - HARNESS CONNECTOR
4 - LATCH RODS

INSTALLATION

(1) Connect latch rods to inside handle actuator.

(2) If equipped, connect harness connectors to power accessories.

(3) Position trim panel on door inner panel.

(4) Press trim panel push-in fasteners inward around perimeter of door.

(5) Install screws attaching trim panel to door (Fig. 9).

WATERDAM

REMOVAL

(1) Remove door trim panel, refer to (Refer to 23 - BODY/DOORS - REAR/TRIM PANEL - REMOVAL).

(2) Peel the waterdam from door.

(3) Route all harnesses and linkage rods through waterdam as necessary.

(4) Separate waterdam from door (Fig. 10).

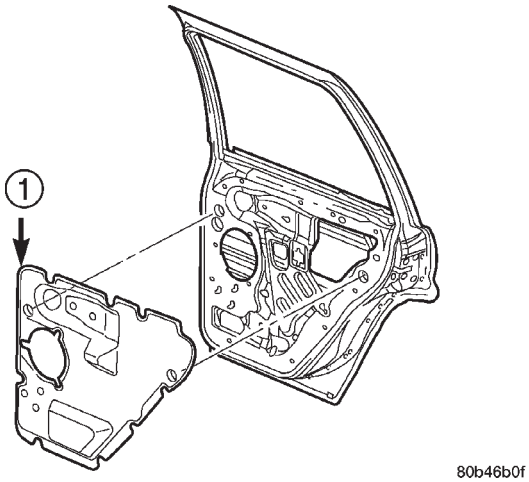

Fig. 10 Rear Door Waterdam

1 - INSULATOR PAD

INSTALLATION

(1) Waterdam contact surface must be free of contaminants. Clean as necessary.

(2) Route all harnesses and linkage rods through waterdam as necessary.

(3) Position waterdam on door and align all holes (Fig. 10).

(4) Press waterdam on door.

(5) Install door trim panel, refer to (Refer to 23 - BODY/DOORS - REAR/TRIM PANEL - INSTALLATION).

WINDOW REGULATOR

REMOVAL

(1) Remove waterdam, refer to (Refer to 23 - BODY/DOORS - REAR/WATERDAM - REMOVAL).

(2) Remove the stationary glass, refer to (Refer to 23 - BODY/STATIONARY GLASS/DOOR GLASS - REMOVAL).

(3) Raise the door glass and support.

(4) Disconnect the speaker harness and power window harness, if equipped.

(5) Remove the window clips retaining regulator (Fig. 11).

(6) Remove the door glass.

(7) Remove the fasteners retaining the regulator (Fig. 12).

(8) Remove the regulator.

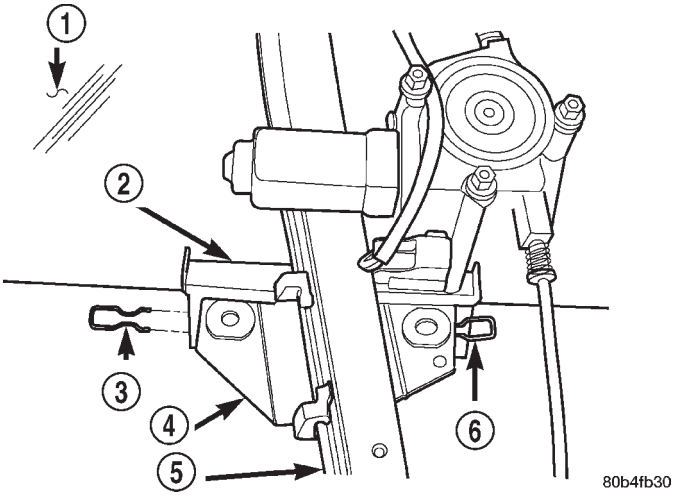

Fig. 11 Window Regulator Retainer Clips

1 - GLASS
2 - RETAINER
3 - CLIP
4 - LIFT PLATE
5 - REGULATOR
6 - CLIP

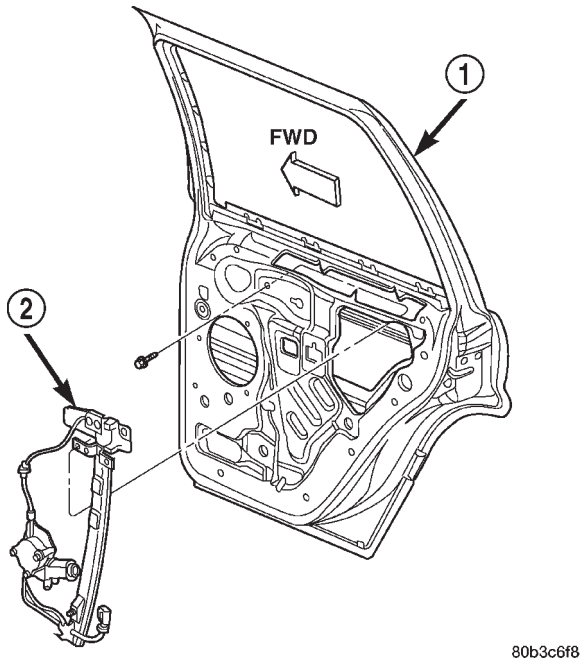

Fig. 12 Rear Door Window Regulator

1 - DOOR
2 - REGULATOR

INSTALLATION

(1) Position the window regulator in the door.

(2) Install the fasteners retaining the regulator (Fig. 12).

(3) Install the door glass.

(4) Install the window clips retaining regulator (Fig. 11).

(5) Lower the door glass.

(6) Install the stationary glass, refer to (Refer to 23 - BODY/STATIONARY GLASS/DOOR GLASS - INSTALLATION).

(7) Connect the power window and speaker harness if equipped.

(8) Install the waterdam, refer to (Refer to 23 - BODY/DOORS - REAR/WATERDAM - INSTALLATION).

(9) Cycle the glass and check for proper operation.

EXTERIOR

TABLE OF CONTENTS

	page
BODY SIDE MOLDINGS	
REMOVAL	113
INSTALLATION	114
COWL GRILLE	
REMOVAL	114
INSTALLATION	114
D-PILLAR APPLIQUE	
REMOVAL	115
INSTALLATION	115
D-PILLAR AIR EXHAUSTER	
REMOVAL	115
INSTALLATION	115
AIR EXHAUSTER	
REMOVAL	115
INSTALLATION	115
EXTERIOR NAME PLATES	
REMOVAL	115
INSTALLATION	115
FRONT FENDER	
REMOVAL	116
INSTALLATION	116
FUEL FILL DOOR	
REMOVAL	117
INSTALLATION	117
GRILLE	
REMOVAL	118
INSTALLATION	118
HEADLAMP MOUNTING MODULE	
REMOVAL	118
INSTALLATION	118
LUGGAGE RACK	
REMOVAL	119
INSTALLATION	119
SIDE VIEW MIRROR GLASS	
REMOVAL	119
INSTALLATION	120
SIDE VIEW MIRROR	
REMOVAL	120
INSTALLATION	120

BODY SIDE MOLDINGS

REMOVAL–FRONT DOOR

(1) Open the front door.

(2) Using a trim stick, pry the upper rear edge off the door. Continue to the front edge of the front door (Fig. 1).

(3) Using a heat gun, warm the adhesive tape on the lower edge of the cladding and pull the cladding from the door.

REMOVAL–REAR DOOR

(1) Open the rear door.

(2) Using a trim stick, pry the upper rear edge off the door. Continue towards the front edge of the rear door (Fig. 2).

(3) Using a heat gun, warm the adhesive tape on the bottom of the cladding and remove the cladding.

REMOVAL–FENDER/QUARTER PANEL

(1) Remove the screws at wheel opening (Fig. 3).

(2) Using a trim stick, gently pry bottom of cladding up.

(3) Lift upwards and remove cladding.

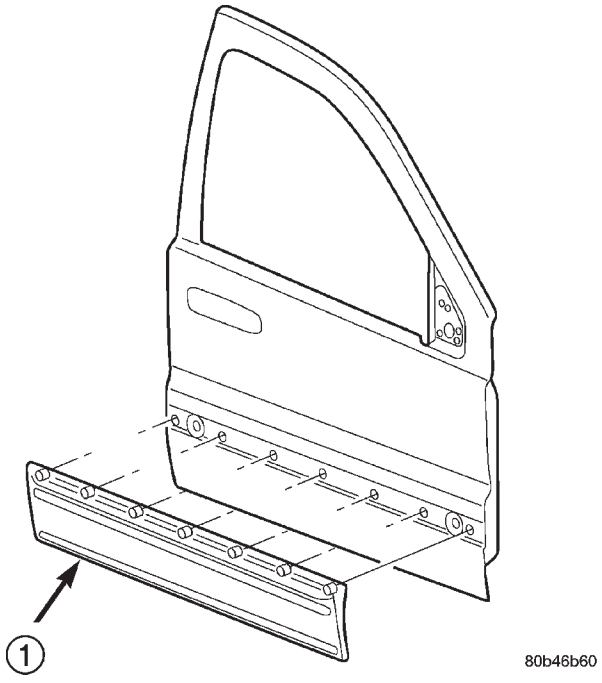

Fig. 1 Front Door Cladding

1 - CLADDING

BODY SIDE MOLDINGS (Continued)

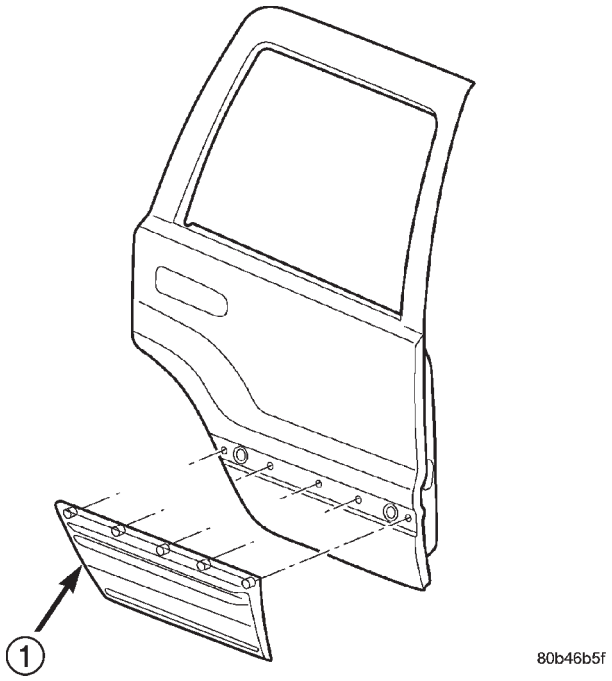

Fig. 2 Rear Door Cladding

1 - CLADDING

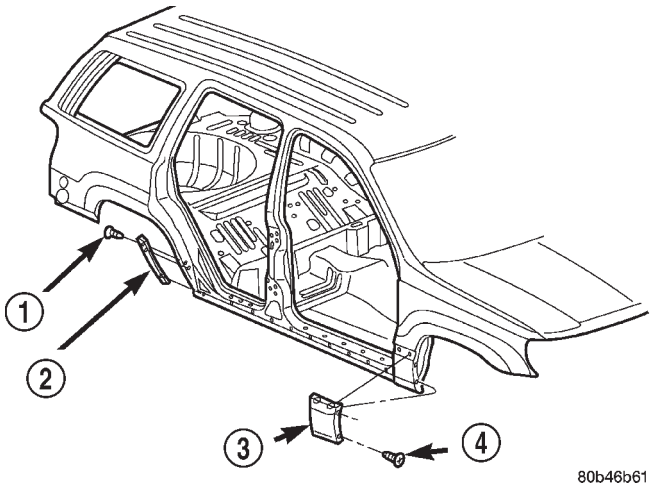

Fig. 3 Front Fender/ Quarter Panel

1 - SCREW
2 - QUARTER PANEL CLADDING
3 - FRONT FENDER CLADDING
4 - SCREW

INSTALLATION–FRONT DOOR

(1) Clean the area thoroughly with Mopar Super Kleen, or equivalent.

(2) Align the body side cladding with the slots in the door. Press the adhesive pad to the door and snap the retainers into the slots.

INSTALLATION–REAR DOOR

(1) Clean the area thoroughly with Mopar Super Kleen, or equivalent.

(2) Align the body side cladding with the slots in the door. Press the adhesive pad to the door and snap the retainers into the slots.

INSTALLATION–FENDER/QUARTER PANEL

(1) Thoroughly clean the area with Mopar Super Kleen or equivalent.

(2) Align the cladding with the screw holes in the fender.

(3) Press the cladding in place.

(4) Install the screws at the wheel opening.

COWL GRILLE

REMOVAL

(1) Remove wiper arms, refer to (Refer to 8 - ELECTRICAL/WIPERS/WASHERS/WIPER ARMS - REMOVAL).

(2) Remove plenum seal.

(3) Remove plastic push nuts attaching cowl cover to cowl (Fig. 4).

(4) Remove windshield washer tubes at connector.

(5) Remove cowl cover from cowl.

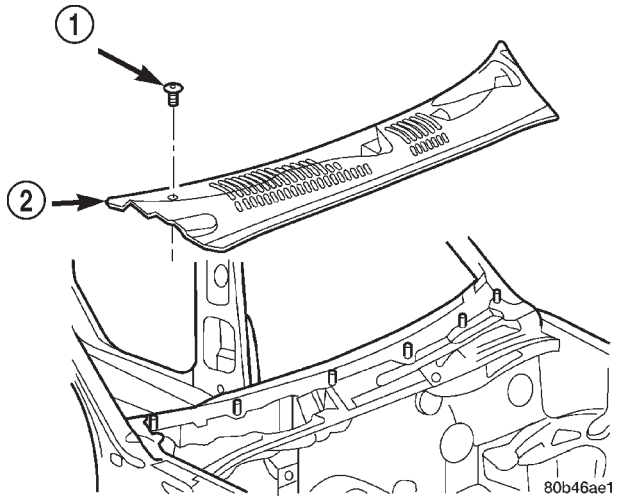

Fig. 4 Cowl Cover

1 - PLASTIC NUT
2 - COWL COVER

INSTALLATION

(1) Position cowl cover on cowl.

(2) Install windshield washer tubes at connector.

(3) Install plastic push nuts attaching cowl cover to cowl (Fig. 4).

(4) Install plenum seal.

(5) Install windshield wiper arms, refer to (Refer to 8 - ELECTRICAL/WIPERS/WASHERS/WIPER ARMS - INSTALLATION).

D-PILLAR APPLIQUE

REMOVAL

(1) Using a trim stick, carefully pry applique from panel (Fig. 5).

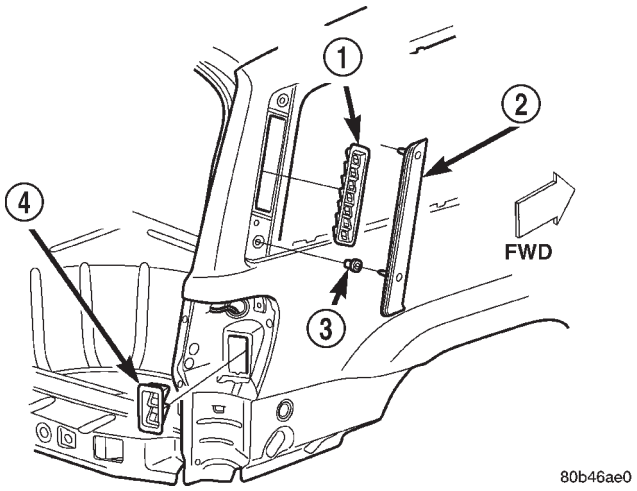

Fig. 5 D-Pillar Applique & Air Exhauster

1 - D-PILLAR EXHAUSTER
2 - D-PILLAR APPLIQUE
3 - CLIP
4 - TAIL LAMP EXHAUSTER

INSTALLATION

(1) Position applique on panel with retainers aligned.

(2) Press applique firmly in place.

D-PILLAR AIR EXHAUSTER

REMOVAL

(1) Remove D-pillar applique, refer to (Refer to 23 - BODY/EXTERIOR/COWL GRILLE SCREEN - REMOVAL).

(2) Carefully pry air exhauster from D-pillar using a flat blade screwdriver (Fig. 5).

INSTALLATION

(1) Reseal air exhauster using foam tape.

(2) Install air exhauster on D-pillar.

(3) Install D-pillar applique, refer to (Refer to 23 - BODY/EXTERIOR/COWL GRILLE SCREEN - INSTALLATION).

AIR EXHAUSTER

REMOVAL

(1) Remove tail lamp, refer to (Refer to 8 - ELECTRICAL/LAMPS/LIGHTING - EXTERIOR/TAIL LAMP - REMOVAL).

(2) Using a trim stick, pry the top of the air exhauster downward to detach the retaining clips.

(3) Separate air exhauster from vehicle (Fig. 5).

INSTALLATION

(1) Position air exhauster in opening.

(2) Press air exhauster inward to secure.

(3) Install tail lamp, refer to (Refer to 8 - ELECTRICAL/LAMPS/LIGHTING - EXTERIOR/TAIL LAMP - INSTALLATION).

EXTERIOR NAME PLATES

REMOVAL

NOTE: Exterior nameplates are attached to body panels with adhesive tape.

(1) Apply a length of masking tape on the body, parallel to the top edge of the nameplate to use as a guide, if necessary.

(2) If temperature is below 21°C (70°F) warm emblem with a heat lamp or gun. Do not exceed 52°C (120°F) when heating emblem.

(3) Insert a plastic trim stick or a hard wood wedge behind the emblem to separate the adhesive backing from the body.

(4) Clean adhesive residue from body with MOPAR Super Clean solvent or equivalent.

INSTALLATION

(1) Remove protective cover from adhesive tape on back of emblem.

(2) Position emblem properly on body (Fig. 6).

(3) Press emblem firmly to body with palm of hand.

(4) If temperature is below 21°C (70°F) warm emblem with a heat lamp or gun to assure adhesion. Do not exceed 52°C (120°F) when heating emblem.

EXTERIOR NAME PLATES (Continued)

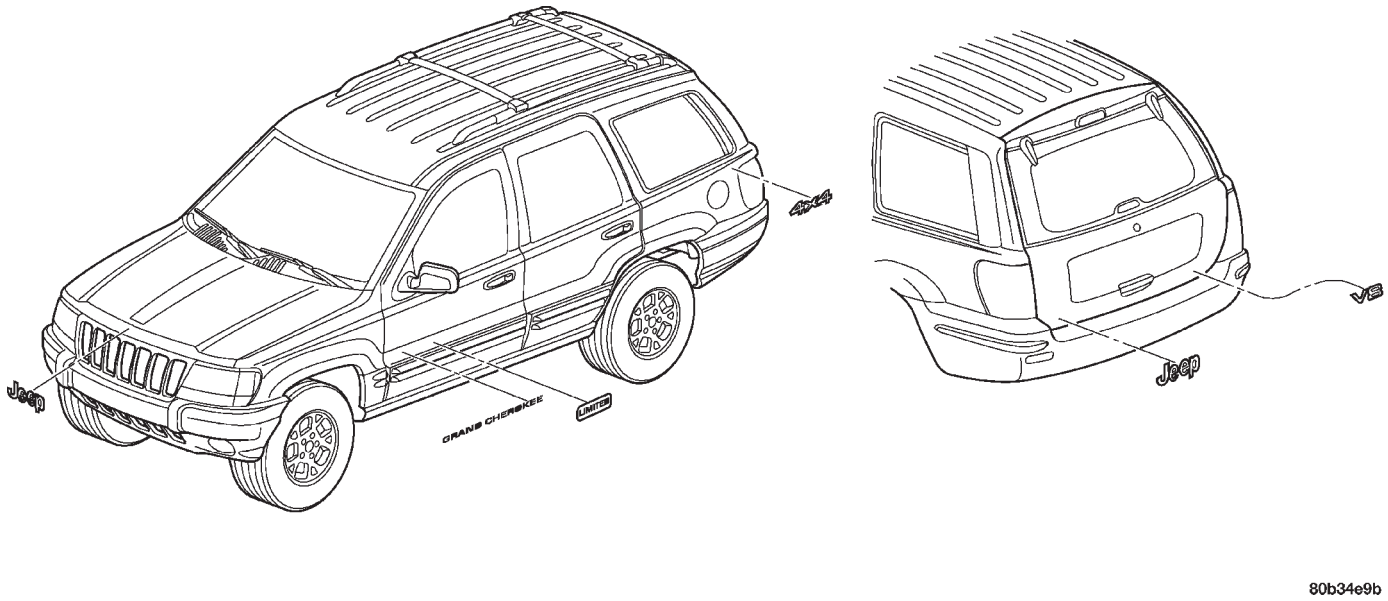

Fig. 6 Exterior Nameplates

FRONT FENDER

REMOVAL

(1) Using a wax crayon or equivalent, mark position of fender.

(2) Remove front fender liner.

(3) Pull back fascia and remove screws attaching fender to fascia.

(4) Remove screws attaching lower fender bracket located behind fascia.

(5) Remove screws attaching fender to rocker panel (Fig. 7).

(6) Remove screws attaching rear of fender to A-pillar brackets.

(7) Open hood.

(8) Loosen screw under hood hinge, attaching fender to engine compartment rail .

(9) Remove screws attaching fender to engine compartment rail (Fig. 8).

(10) Right fender only:

(a) If equipped, remove radio antenna.

(11) Separate fender from body.

INSTALLATION

(1) Position fender on body.

(2) Right fender only:

(a) If equipped, install radio antenna.

(3) Install all screws finger-tight.

(4) Align fender with adjacent body panels and wax crayon reference marks.

(5) Tighten all screws.

(6) Install inner fender liner.

FRONT FENDER (Continued)

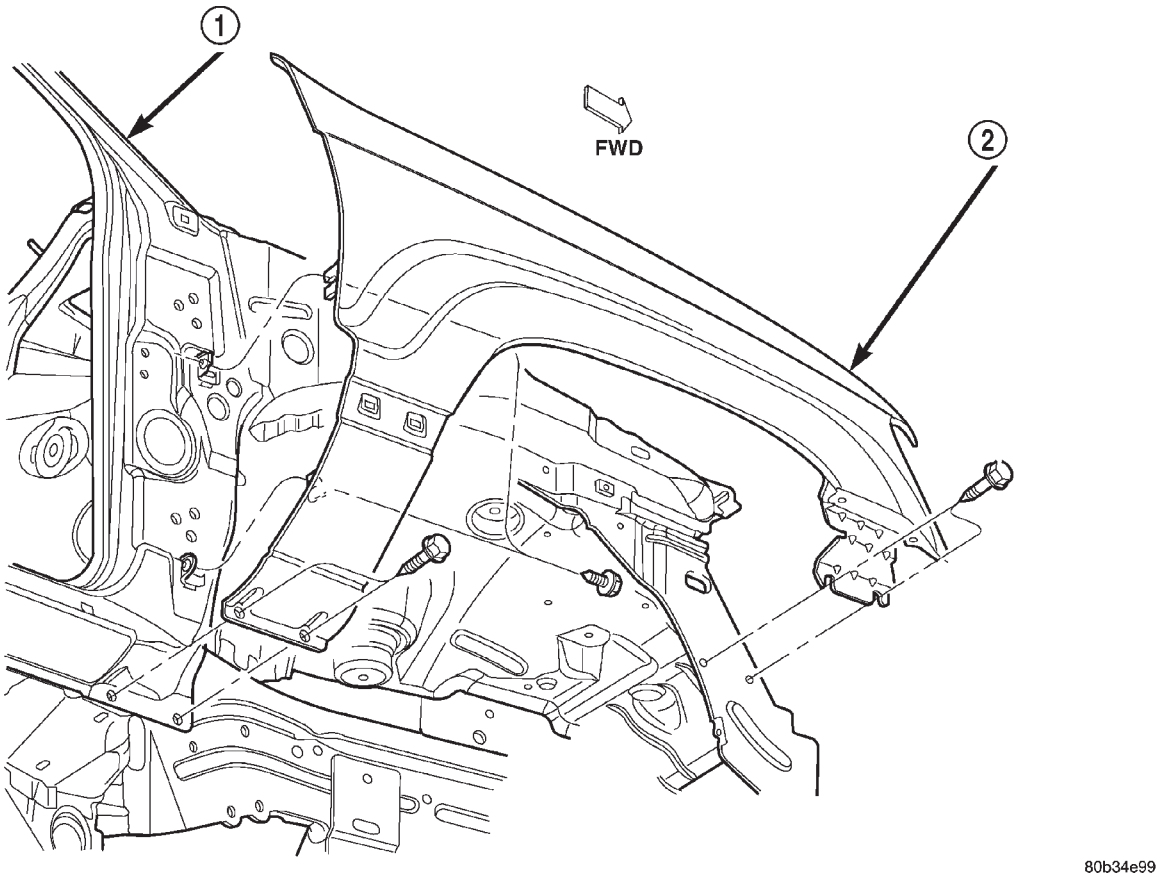

Fig. 7 Fender Mounting

1 - BODY
2 - FENDER

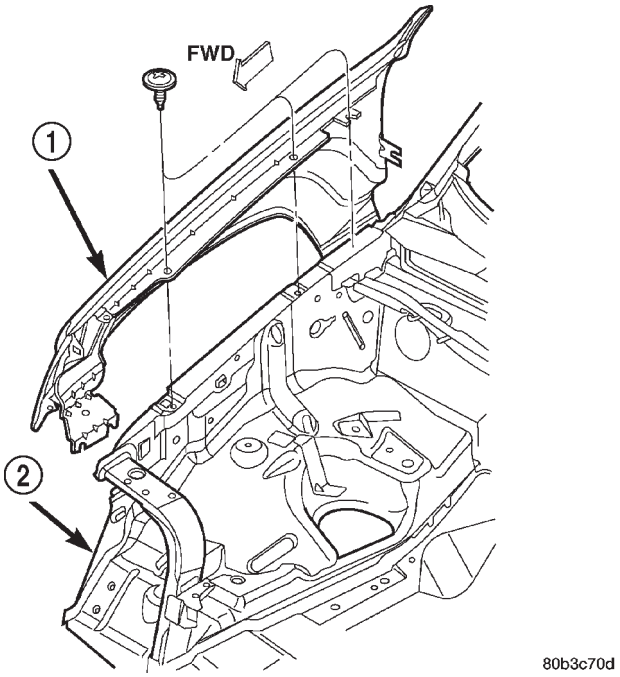

Fig. 8 Upper Fender Mounting

1 - FENDER
2 - BODY

FUEL FILL DOOR

REMOVAL

(1) Open the fuel filler door.

(2) Remove the screws attaching the door to the quarter panel (Fig. 9).

(3) Remove the door from the panel.

INSTALLATION

(1) Position the fuel filler door on the quarter panel with the screw holes aligned.

(2) Install the screws attaching the fuel filler door to the quarter panel.

FUEL FILL DOOR (Continued)

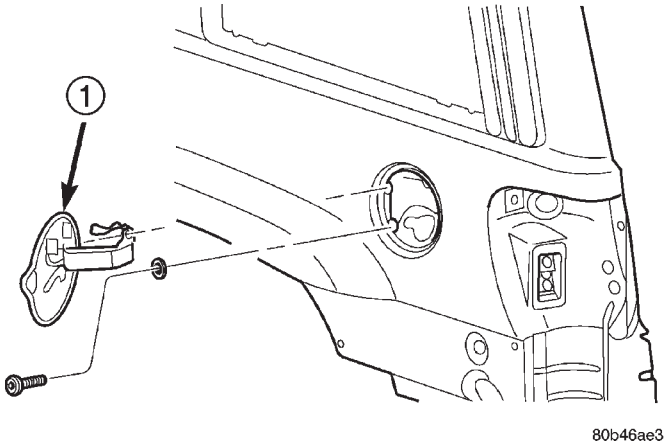

Fig. 9 Fuel Filler Door

1 - FUEL FILL DOOR

GRILLE

REMOVAL

(1) Remove fascia, refer to (Refer to 13 - FRAMES & BUMPERS/BUMPERS/FRONT FASCIA - REMOVAL).

(2) Disengage retainers attaching grille insert to grille/fascia.

(3) Separate grille insert from grille/fascia (Fig. 10).

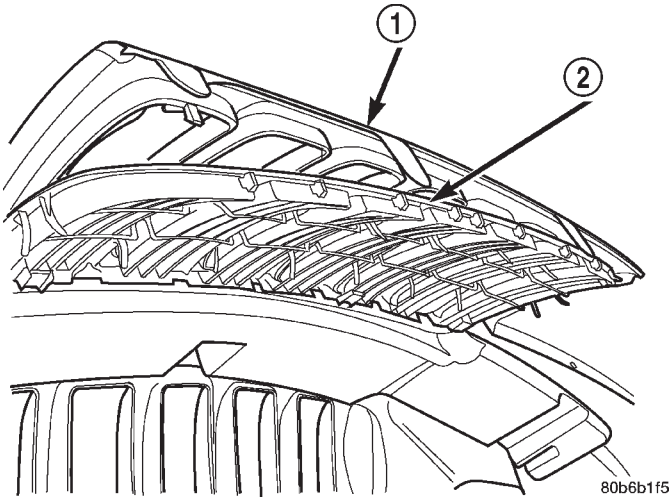

Fig. 10 Grille Insert

1 - GRILLE/FASCIA
2 - INSERT

INSTALLATION

(1) Position grille insert in grille/fascia (Fig. 10).

(2) Engage retainers attaching grille insert to grille/fascia.

(3) Install fascia, refer to (Refer to 13 - FRAMES & BUMPERS/BUMPERS/FRONT FASCIA - INSTALLATION).

HEADLAMP MOUNTING MODULE

REMOVAL

CAUTION: Take special care when handling the HMM not to damage the upper mounting tabs. Step #3 must be performed prior to removing HMM from the vehicle to prevent damage to HMM.

(1) Remove fascia, refer to (Refer to 13 - FRAMES & BUMPERS/BUMPERS/FRONT FASCIA - REMOVAL).

(2) Remove inner fender liner.

(3) Reach into the wheelhouse opening and disengage the retainer attaching the HMM to each side of the body.

(4) Remove bolts attaching headlamp mounting module to body (Fig. 11).

(5) Disconnect headlamp wire harness connectors.

(6) Separate headlamp mounting module from vehicle.

INSTALLATION

(1) Position headlamp mounting module at vehicle.

(2) Connect headlamp wire harness connectors.

(3) Engage the retainer attaching the HMM to each side of the body.

(4) Install bolts attaching headlamp mounting module to body (Fig. 11).

(5) Install inner fender liner.

(6) Install front fascia, refer to (Refer to 13 - FRAMES & BUMPERS/BUMPERS/FRONT FASCIA - INSTALLATION).

HEADLAMP MOUNTING MODULE (Continued)

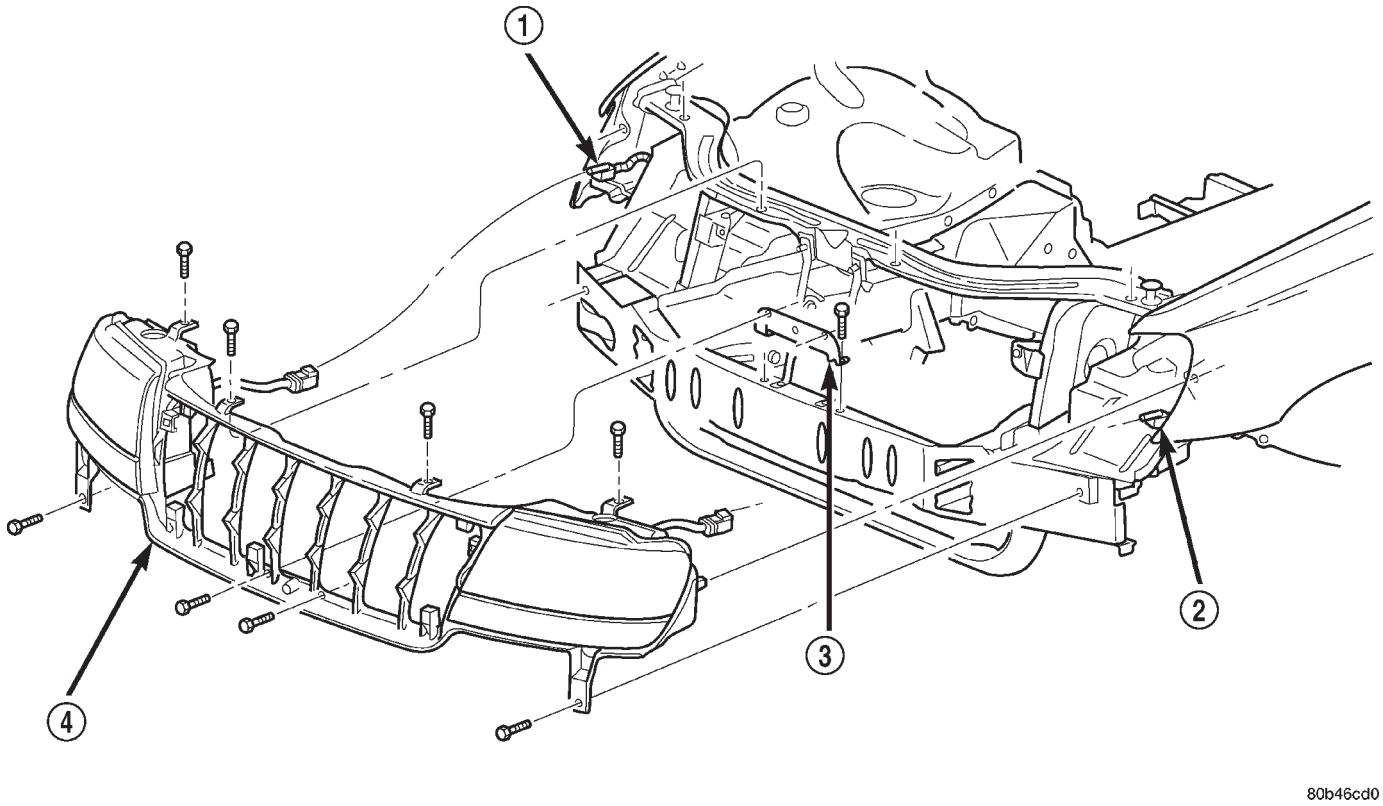

Fig. 11 Headlamp Mounting Module

1 - CONNECTOR
2 - CONNECTOR
3 - MOUNTING BRACKET
4 - HEADLAMP MODULE

LUGGAGE RACK

REMOVAL

NOTE: The skid strips are attached to the roof panel with adhesive.

(1) Using a trim stick, or other suitable device, pry support cover off.

(2) If necessary, slide the crossbars to expose the screws attaching the slide rails to the supports.

(3) Remove the screws retaining the slide rails to the supports.

(4) Remove the screws attaching the supports to the roof panel.

(5) Separate the supports from the roof panel.

NOTE: If a crossbar needs to be serviced, the forward or rearward supports will have to be removed.

INSTALLATION

(1) Position the supports on the roof panel and install the screw. Be sure that the gasket is properly seated.

(2) Position the luggage rack on the supports.

(3) Install the screws attaching the side rails to the supports.

(4) Position the supports covers on the supports and press into place.

SIDE VIEW MIRROR GLASS

REMOVAL

(1) With damaged mirror still on vehicle, position mirror glass down and centered.

(2) Position a wide leverage device between the bottom edge of the glass and the mirror shell.

(3) Firmly apply pressure in an upward direction until glass assembly disengages from adapter plate.

(4) Disconnect the heater wire terminal, if equipped, or the EC plug, if equipped.

SIDE VIEW MIRROR GLASS (Continued)

INSTALLATION

(1) Connect the heater wire terminal or the EC plug, if equipped.

(2) Position the replacement glass in the mirror shell and align the four snap tabs with the four cavities in the shell.

(3) Apply firm pressure inward until the replacement glass assembly engages with the adapter plate. Correct assembly will result in a firm click. Glass assembly should exhibit even gaps to the shell when complete.

(4) Pull lightly on corners of glass assembly to ensure all four snaps are engaged and there is no free play.

SIDE VIEW MIRROR

REMOVAL

(1) Remove door trim panel, refer to (Refer to 23 - BODY/DOOR - FRONT/TRIM PANEL - REMOVAL).

(2) Disengage power mirror harness connector, if equipped.

(3) Remove mirror flag seal.

(4) Remove nuts attaching mirror to door (Fig. 12).

(5) Separate mirror from door.

INSTALLATION

(1) Position mirror on door. Verify that gasket seal is properly positioned.

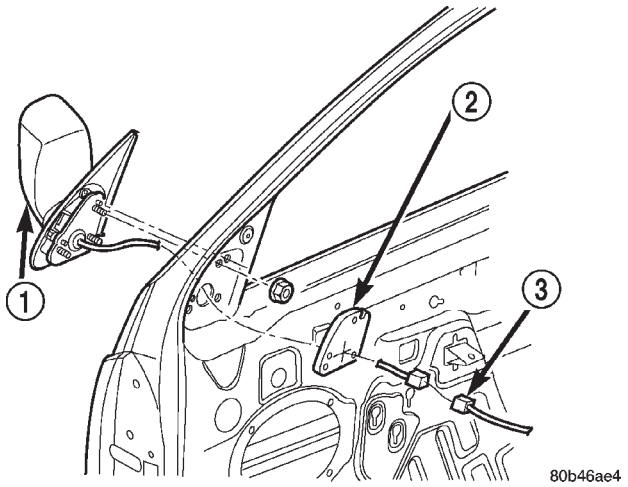

Fig. 12 Side View Mirror

1 - SIDEVIEW MIRROR
2 - MIRROR FLAG SEAL
3 - CONNECTOR

(2) Install nuts attaching mirror to door (Fig. 12).

(3) Install mirror retaining nuts.

(4) Install mirror flag seal.

(5) Engage power mirror harness connector, if equipped.

(6) Install door trim panel, refer to (Refer to 23 - BODY/DOOR - FRONT/TRIM PANEL - INSTALLATION).

HOOD

TABLE OF CONTENTS

	page
GAS PROP	
REMOVAL	121
INSTALLATION	121
HINGE	
REMOVAL	121
INSTALLATION	121
HOOD	
REMOVAL	121
INSTALLATION	122
ADJUSTMENTS	122
INSULATION	
REMOVAL	122
INSTALLATION	122
LATCH	
REMOVAL	122
INSTALLATION	122
LATCH RELEASE CABLE	
REMOVAL	123
INSTALLATION	123

GAS PROP

REMOVAL

(1) Raise and support hood.

(2) Using a small flat blade, pry the retainer attaching hood support prop to lower ball stud.

(3) Slide retainer attaching hood support prop upper ball stud downward.

(4) Disconnect hood support prop from lower ball stud and rotate support prop upward and disconnect from upper ball stud (Fig. 1).

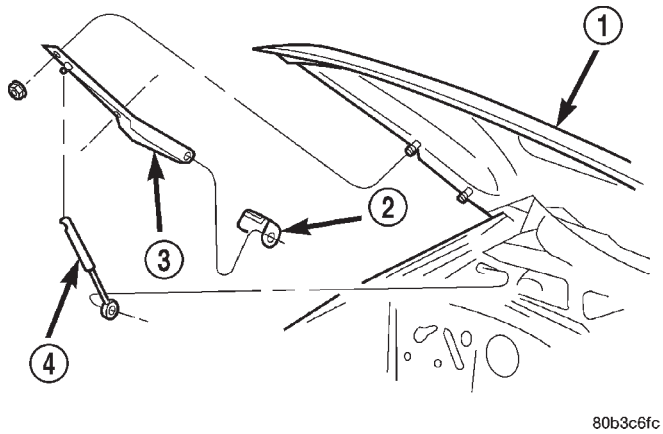

Fig. 1 Hood Support Prop

1 - HOOD
2 - COVER
3 - HINGE
4 - PROP

INSTALLATION

(1) Position hood support prop on upper ball stud (Fig. 1).

(2) Slide retainer upward to secure support prop to upper ball stud.

(3) Position support prop on lower ball stud and press retainer inward to secure.

HINGE

REMOVAL

(1) Raise and support hood.

(2) Using a wax crayon or equivalent, mark position of hinge.

(3) Remove hood hinge prop rod.

(4) Remove nuts attaching hinge to hood (Fig. 1).

(5) Remove bolts attaching hinge to body.

(6) Separate hinge from vehicle.

INSTALLATION

(1) Position hinge on vehicle and align reference marks.

(2) Install bolts attaching hinge to body.

(3) Install nuts attaching hinge to hood.

(4) Install hood hinge prop rod.

HOOD

REMOVAL

(1) Raise hood.

(2) If equipped, disconnect underhood lamp harness connector. (Connector is located under cowl cover).

(3) Using a wax crayon or equivalent, mark location of hood hinges on hood for installation alignment.

(4) Support hood in the open position.

(5) Remove hood support prop rods.

(6) Remove bolts attaching hinges to hood.

(7) With the aid of a helper, remove hood from vehicle.

HOOD (Continued)

INSTALLATION

(1) Position hood on hinges.
(2) Install bolts finger-tight.
(3) Align hinges with installation reference marks and tighten bolts.
(4) Install hood support prop rods.
(5) Connect underhood lamp connector.
(6) Inspect hood for proper alignment and adjust as necessary.

HOOD ADJUSTMENT

The hood attaching holes are enlarged to aid front, back and side to side adjustment.

(1) If hood is low in relation to cowl panel, insert shims between hinge and hood.
(2) Adjust hood bumper in or out to adjust hood-to-fender height alignment.
(3) Adjust the hood latch as necessary. Tighten the nuts to 11N·m (8 ft. lbs.).
(4) Align the latch striker so that striker enters the latch squarely and without binding.

INSULATION

REMOVAL

(1) Raise the hood.
(2) Remove the insulation panel fasteners.
(3) Remove the hood insulation panel.

INSTALLATION

(1) Position the insulation panel on the underside of the hood.
(2) Install the insulation panel fasteners.
(3) Close the hood.

LATCH

REMOVAL

(1) Remove nuts attaching latch to radiator cross-member support (Fig. 2).
(2) Disconnect hood release cable from latch.
(3) Separate latch from vehicle.

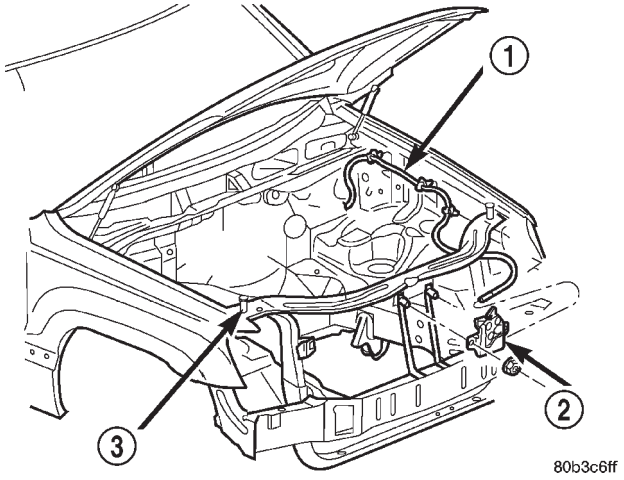

Fig. 2 Hood Latch

1 - HOOD RELEASE CABLE
2 - LATCH
3 - BUMPER

INSTALLATION

(1) Connect latch release cable to latch.
(2) Position latch on radiator crossmember support.
(3) Install nuts attaching latch to radiator cross-member support. Tighten nuts to 11 N·m (8 ft. lbs.) torque (Fig. 2).

LATCH RELEASE CABLE

REMOVAL

(1) Disconnect cable from hood latch (Fig. 3).

(2) Disconnect cable from retaining clips on left inner fender panel.

(3) Remove left cowl side trim panel.

(4) Remove fasteners attaching cable bracket to cowl side panel (Fig. 4).

(5) Route cable through dash panel and remove it from under instrument panel.

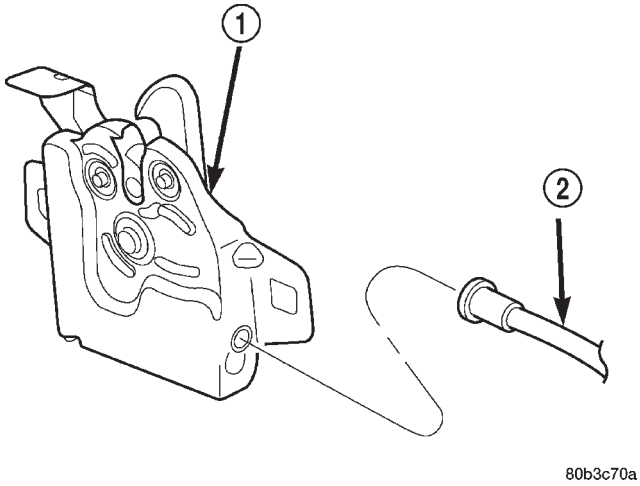

Fig. 3 Hood Latch

1 - HOOD LATCH
2 - HOOD RELEASE CABLE

INSTALLATION

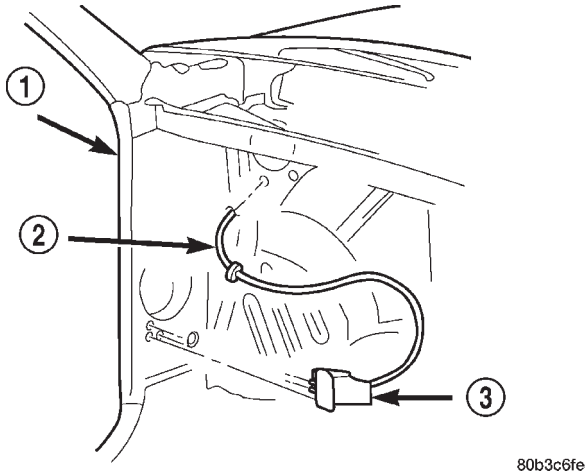

Fig. 4 Hood Release Cable

1 - LOWER COWL
2 - HOOD RELEASE CABLE
3 - RELEASE HANDLE

(1) Route cable through hole in dash panel into engine compartment.

(2) Pull cable forward and seat grommet in dash panel.

(3) Position cable bracket on cowl side panel and install fasteners (Fig. 4).

(4) Install left cowl side trim panel.

(5) Route and install cable in retaining clips on left inner fender panel.

(6) Connect cable to hood latch (Fig. 3).

INSTRUMENT PANEL SYSTEM

TABLE OF CONTENTS

page

INSTRUMENT PANEL SYSTEM
DESCRIPTION 124
OPERATION. 127
REMOVAL 127
INSTALLATION. 133
CLUSTER BEZEL
REMOVAL 135
INSTALLATION. 135
GLOVE BOX
STANDARD PROCEDURE 136
GLOVE BOX ROLL DOWN 136
REMOVAL 136
INSTALLATION. 137
GLOVE BOX LATCH
REMOVAL 137
INSTALLATION. 137
GLOVE BOX LATCH STRIKER
REMOVAL 138
INSTALLATION. 139
INSTRUMENT PANEL END CAP
REMOVAL 139
INSTALLATION. 140
INSTRUMENT PANEL STUCTURAL DUCT
REMOVAL 140
INSTALLATION. 140
INSTRUMENT PANEL TOP COVER
REMOVAL 141
INSTALLATION. 141
INSTRUMENT PANEL TOP PAD
REMOVAL 141
INSTALLATION. 143
INSTRUMENT PANEL C-CHANNEL COVER BRACKET
REMOVAL 145
INSTALLATION. 145
INSTRUMENT PANEL CENTER BEZEL - LOWER
REMOVAL 146
INSTALLATION. 146
INSTRUMENT PANEL CENTER BEZEL - UPPER
REMOVAL 147
INSTALLATION. 147
INSTRUMENT PANEL CENTER FLOOR TUNNEL BRACKET
REMOVAL 147
INSTALLATION. 148
INSTRUMENT PANEL COURTESY LAMP BRACKET
REMOVAL 148
INSTALLATION. 149
INSTRUMENT PANEL INTERMEDIATE BRACKET
REMOVAL 149
INSTALLATION. 150
INSTRUMENT PANEL LOWER RIGHT CENTER BEZEL
REMOVAL 150
INSTALLATION. 150
INSTRUMENT PANEL PLENUM BRACKET
REMOVAL 151
INSTALLATION. 152
INSTRUMENT PANEL STEERING COLUMN BRACKET
REMOVAL 152
INSTALLATION. 152
INSTRUMENT PANEL STEERING COLUMN SUPPORT BRACKET
REMOVAL 153
INSTALLATION. 153
INSTRUMENT PANEL TRIM BEZEL - DRIVER
REMOVAL 154
INSTALLATION. 154
INSTRUMENT PANEL TRIM BEZEL - PASSENGER
REMOVAL 155
INSTALLATION. 155
POWER OUTLET DOOR
REMOVAL 155
INSTALLATION. 156
STEERING COLUMN OPENING COVER
REMOVAL 156
INSTALLATION. 157

INSTRUMENT PANEL SYSTEM

DESCRIPTION

The instrument panel is located at the front of the passenger compartment (Fig. 1). This instrument panel uses a full-width structural plastic foundation as its primary support. This foundation structure is often referred to as a structural duct, as the unit also serves as the air flow duct for the heating and air conditioning system panel and demister outlets, which greatly reduces the number of components used over conventional instrument panel construction. The front and rear halves of this structural duct

INSTRUMENT PANEL SYSTEM (Continued)

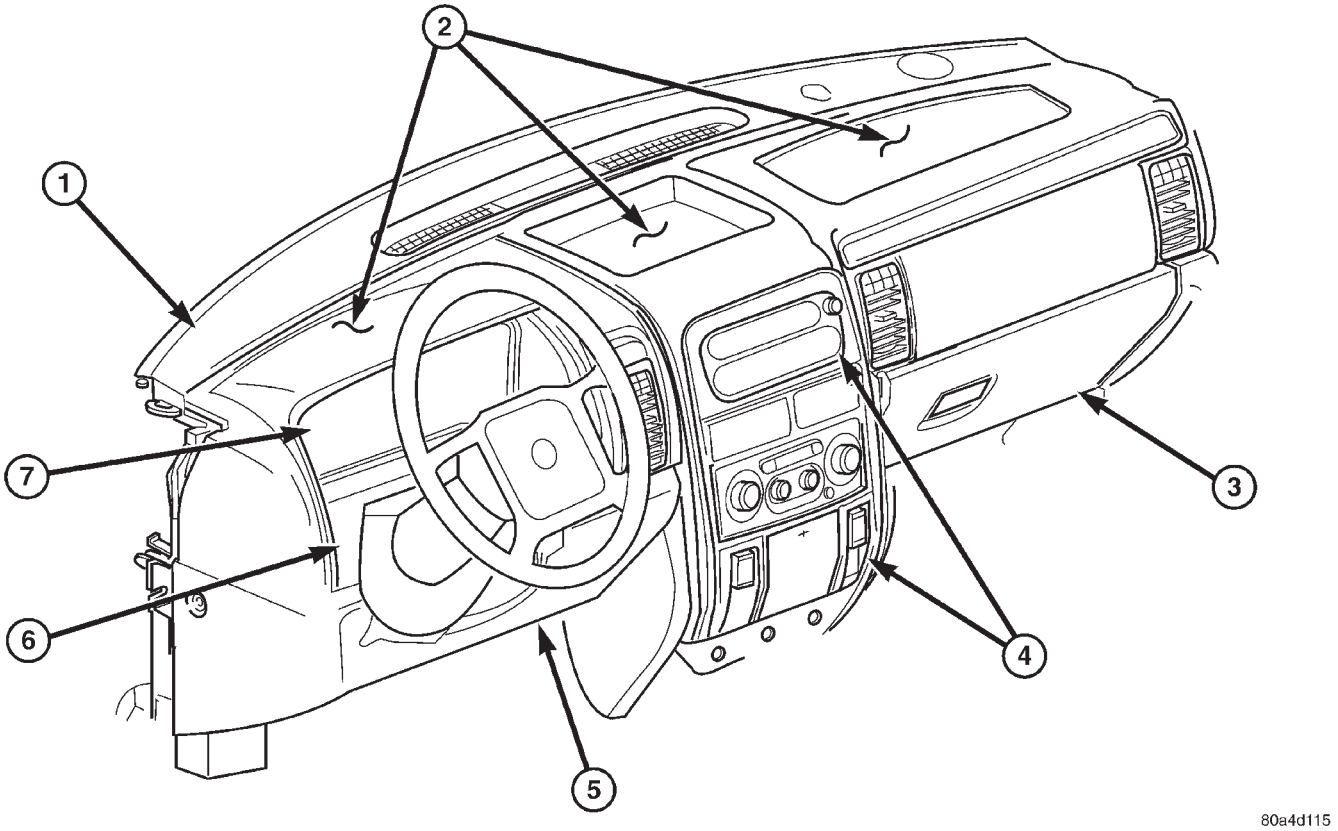

Fig. 1 Instrument Panel

1 - TOP COVER
2 - TOP PAD
3 - GLOVE BOX
4 - CENTER STACK
5 - STEERING COLUMN OPENING COVER
6 - CLUSTER BEZEL
7 - INSTRUMENT CLUSTER

are molded from a blend of polycarbonate and ABS plastics, which gives these components excellent strength and impact resistance. The two halves of this structural duct are vibration welded together. The instrument cluster, radio, A/C-heater control, passenger airbag, glove box latch strikers and hinges, steering column support bracket, electrical junction block, accessory switches, as well as numerous other components are secured to and supported by this structural duct. The structural duct also features integral vacuum and electrical harness routing troughs. All of these integral features help to reduce the total component part requirements, which reduces assembly complexity and potential buzzes, squeaks and rattles. At the same time, these features make the structural duct-based instrument panel more suitable for recycling by minimizing the number of parts to be removed.

A patented feature of the construction of this instrument panel has the heater and air conditioner housing unit and the steering column secured to the structural duct and installed into the vehicle as a unit during vehicle assembly. This feature helps to improve vehicle quality by allowing the instrument panel, heater and air conditioner housing unit and the steering column to be assembled and tested outside the vehicle prior to installation, which is easier and more reliable than in-car assembly and testing. This feature also adds a floor panel mounting point to the instrument panel unit, which provides additional stiffness and system integrity. The top of the instrument panel structural duct is secured to the top of the dash panel near the base of the windshield using weld studs with nuts. An end bracket integral to each end of the structural duct is secured to each cowl side inner panel with two screws. A stamped metal bracket supports the center of the structural duct by securing it to the top of the floor panel transmission tunnel below the instrument panel with screws.

The instrument panel for this vehicle includes the following major features:

• **Cluster Bezel** - This molded plastic bezel is secured with snap clips to the instrument panel structural duct. It trims out the lower edge of the instrument cluster, conceals the lower cluster mounting points, and fills the opening between the instrument cluster and the steering column opening cover,

where the steering column passes through the instrument panel. On vehicles built for sale in certain international markets where headlamp leveling is required equipment, the cluster bezel also includes a mounting location for the headlamp leveling switch.

- **Glove Box** - The hinged bin-type glove box in the passenger side of the instrument panel features a recessed paddle-operated latch handle that is offset towards the driver side of the vehicle for easier access. The glove box latching mechanism features two bolt-type latches that engage a striker located on each side of the glove box opening for increased strength and integrity. Three molded hook formations on the lower edge of the glove box door are engaged with and pivot on three hinge pins integral to the lower edge of the structural duct. The glove box door also serves as the passenger side knee blocker. A honeycomb structure between the inner and outer glove box door panels helps to absorb the impact load and distribute it to the instrument panel structural duct.
- **Instrument Panel Center Stack** - The center stack area of the instrument panel features two snap-on bezels. The upper bezel has two integral center panel duct air outlets and conceals the radio and upper heater and air conditioner control mounting hardware. The lower bezel conceals the lower heater and air conditioner control mounting hardware and includes a concealed integral storage bin, which features a push-push latching mechanism and viscous-damped hinges. Pushing in on the face of the bin releases the latch and the bin opens by itself. The lower bezel also houses the two switches for the optional heated driver and passenger front seats, as well as two accessory power outlets. The accessory power outlet to the passenger side of the storage bin is covered by a pivoting door when not in use. The accessory power outlet to the driver side of the storage bin is covered by a snap-in plastic cap when not in use. If the optional smoker's package is ordered, a removable ash receiver is inserted in the storage bin and a cigar lighter is inserted in the driver side accessory power outlet.
- **Instrument Panel Top Cover** - This molded plastic unit incorporates the windshield defroster outlets, the instrument panel speaker grilles, and trims the top of the instrument panel up to the base of the windshield. It also features a dedicated opening located outboard of the driver side defroster duct for the optional automatic headlamp light sensor/vehicle theft security system indicator unit. Models without this optional equipment have a molded plug fitted to this opening in the top cover. The top cover is secured to the instrument panel structural duct with snap clips.
- **Instrument Panel Top Pad** - A foam-padded cast vinyl instrument panel top pad covers the instrument panel structural duct. This surface is designed to deform upon impact without breaking, while also providing a luxurious feel. The top pad features a grained outer surface and two shallow molded depressions on the top, which can serve as trays to store various small objects. A unique anti-skid texture molded into the top pad surface in the bottom of these depressions will help to prevent objects from shifting in the trays while the vehicle is being driven. The top pad conceals an integral top-hinged steel passenger side airbag door, which is located between the two panel duct air outlets above the glove box. The top pad also features a raised hood formation over the instrument cluster area, which helps to block light reflections from the windshield onto the cluster lens in the daytime, and light reflections from the cluster onto the windshield at night.
- **Steering Column Opening Cover** - The steering column opening cover serves as the driver side knee blocker. This molded plastic cover has an integral ribbed plastic liner concealed behind it, for increased strength and integrity. The steering column opening cover transfers impact loads through a stamped and welded instrument panel steering column bracket to the cast magnesium instrument panel steering column support bracket, which is secured to and distributes the impact load to the instrument panel structural duct.

Hard wired circuitry connects the electrical components on the instrument panel to each other through the electrical system of the vehicle. These hard wired circuits are integral to several wire harnesses, which are routed throughout the vehicle and retained by many different methods. These circuits may be connected to each other, to the vehicle electrical system and to the instrument panel components through the use of a combination of soldered splices, splice block connectors and many different types of wire harness terminal connectors and insulators. Refer to the appropriate wiring information. The wiring information includes complete circuit diagrams, proper wire and connector repair procedures, further details on wire harness routing and retention, as well as pinout and location views for the various wire harness connectors, splices, and grounds.

The service information found here covers the major instrument panel components. However, complete service information for all of the systems and components housed in the instrument panel in a single area of the service manual would not be practical. Therefore, the coverage for any component mounted on or in the instrument panel and not found here, will be found with the service information covering the vehicle system to which the component belongs. The instrument panel structural duct is serviced only as a complete unit. If it is faulty or damaged, the

INSTRUMENT PANEL SYSTEM (Continued)

entire structural duct unit must be replaced. Most other trim and functional components of the instrument panel are available for service replacement separately from the structural duct.

OPERATION

The instrument panel serves as the command center of the vehicle, which necessarily makes it a very complex unit. The instrument panel is designed to house the controls and monitors for standard and optional powertrains, climate control systems, audio systems, safety systems, and many other comfort or convenience items. When the two primary molded plastic components of the instrument panel structural duct are vibration welded together they provide superior instrument panel stiffness and integrity to help reduce buzzes, squeaks, and rattles. This type of construction also provides improved energy absorption which, in conjunction with the dual airbags and seat belts, helps to improve occupant protection.

The instrument panel is also designed so that all of the various controls can be safely reached and the monitors can be easily viewed by the vehicle operator when driving, while still allowing relative ease of access to each of these items for service. Modular instrument panel construction allows all of the gauges and controls to be serviced from the front of the panel. In addition, most of the instrument panel electrical components can be accessed without complete instrument panel removal. However, if necessary, the instrument panel can be removed from the vehicle as an assembly.

The steering column opening cover with its integral knee blocker located on the driver side of the instrument panel works in conjunction with the airbag system in a frontal vehicle impact to keep the driver properly positioned for an airbag deployment. In addition, removal of this component provides access to the steering column mounts, the steering column wiring, the Junction Block (JB), the electronic combination flasher, and much of the instrument panel wiring. In a frontal collision, the glove box door on the passenger side of the instrument panel provides the same function for the front seat passenger as the knee blocker does for the driver. The glove box door also incorporates a recessed latch handle.

Removal of the instrument panel upper center bezel allows access to the radio and the upper mounts for the heating and air conditioning control. Removal of the lower cluster bezel provides dedicated mounting locations for the heated seat switches, accessory power outlets/cigar lighter, and storage bin/ash receiver. Removal of the lower cluster bezel allows access to the lower mounts for the heating and air conditioning control, the heated seat switches, and the accessory power outlets/cigar lighter. Removal of the instrument cluster bezel allows access to the instrument cluster. Removal of the instrument cluster allows access to the cluster illumination and indicator lamp bulbs, and more of the instrument panel wiring. Removal of the instrument panel top cover allows access to the instrument panel speakers and the automatic headlamp light sensor/vehicle theft security system indicator unit. Removal of the instrument panel top pad allows access to the passenger airbag. Complete instrument panel removal is required for service of most components of the heating and air conditioning system housing, including the heater core and the evaporator.

See the owner's manual in the vehicle glove box for more information on the features, use and operation of all of the components and systems mounted on or in the instrument panel.

REMOVAL

WARNING: ON VEHICLES EQUIPPED WITH AIRBAGS, DISABLE THE AIRBAG SYSTEM BEFORE ATTEMPTING ANY STEERING WHEEL, STEERING COLUMN, OR INSTRUMENT PANEL COMPONENT DIAGNOSIS OR SERVICE. DISCONNECT AND ISOLATE THE BATTERY NEGATIVE (GROUND) CABLE, THEN WAIT TWO MINUTES FOR THE AIRBAG SYSTEM CAPACITOR TO DISCHARGE BEFORE PERFORMING FURTHER DIAGNOSIS OR SERVICE. THIS IS THE ONLY SURE WAY TO DISABLE THE AIRBAG SYSTEM. FAILURE TO TAKE THE PROPER PRECAUTIONS COULD RESULT IN ACCIDENTAL AIRBAG DEPLOYMENT AND POSSIBLE PERSONAL INJURY.

NOTE: Before starting this procedure, be certain to turn the steering wheel until the front wheels are in the straight-ahead position.

(1) Disconnect and isolate the battery negative cable.

(2) Remove the trim from the right and left A-pillars. (Refer to 23 - BODY/INTERIOR/A-PILLAR TRIM - REMOVAL).

(3) Remove the top cover from the instrument panel. (Refer to 23 - BODY/INSTRUMENT PANEL/INSTRUMENT PANEL TOP COVER - REMOVAL).

(4) Remove the four nuts that secure the instrument panel to the studs on the dash panel near the windshield fence line (Fig. 2).

(5) Remove the scuff plates from the right and left front door sills. (Refer to 23 - BODY/INTERIOR/DOOR SILL SCUFF PLATE - REMOVAL).

(6) Remove the trim panels from the right and left inner cowl sides. (Refer to 23 - BODY/INTERIOR/COWL TRIM - REMOVAL).

(7) Remove the console from the floor panel transmission tunnel. (Refer to 23 - BODY/INTERIOR/FLOOR CONSOLE - REMOVAL).

INSTRUMENT PANEL SYSTEM (Continued)

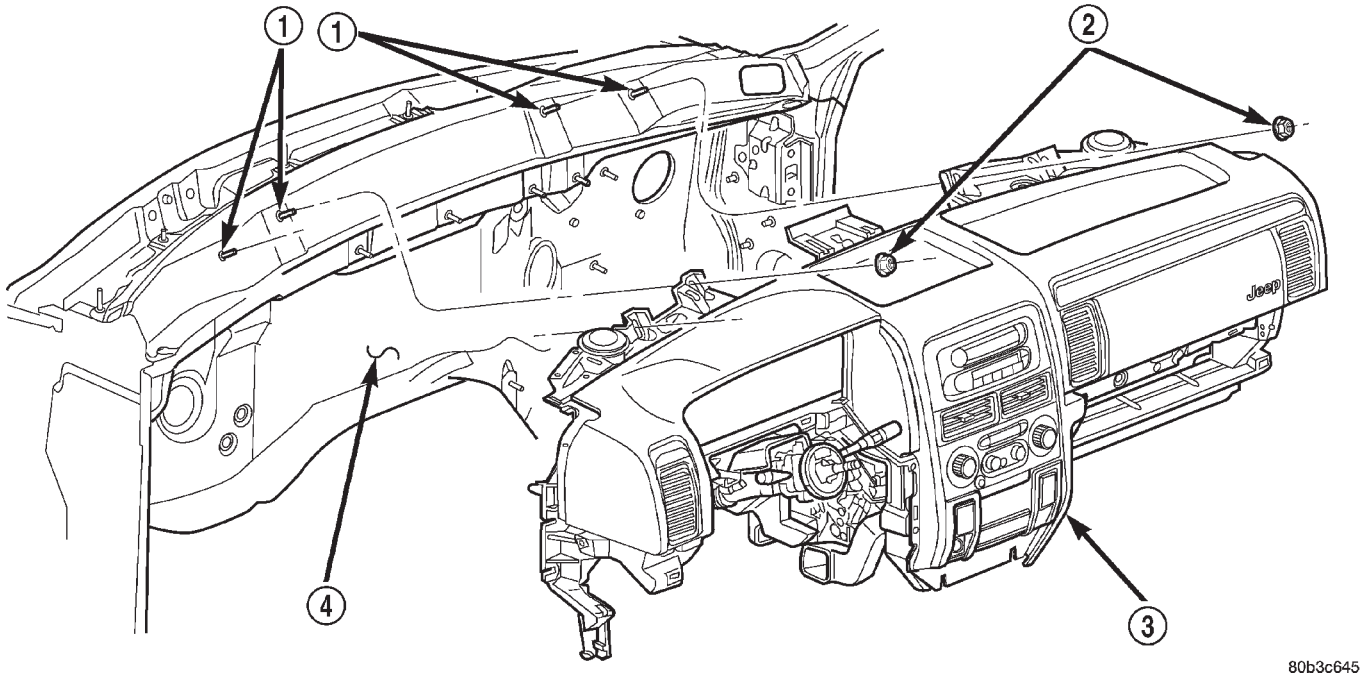

Fig. 2 Instrument Panel to Dash Panel Mounting

1 - STUD (4)
2 - NUT (4)
3 - INSTRUMENT PANEL
4 - DASH PANEL

(8) Remove the fuse cover from the Junction Block (JB). (Refer to 8 - ELECTRICAL/POWER DISTRIBUTION/FUSE COVER - REMOVAL).

(9) Remove the cluster bezel from the instrument panel. (Refer to 23 - BODY/INSTRUMENT PANEL/CLUSTER BEZEL - REMOVAL).

(10) Remove the steering column opening cover from the instrument panel. (Refer to 23 - BODY/INSTRUMENT PANEL/STEERING COLUMN OPENING COVER - REMOVAL).

(11) Remove the steering column bracket from the instrument panel steering column support bracket. (Refer to 23 - BODY/INSTRUMENT PANEL/IP STEERING COLUMN BRACKET - REMOVAL).

(12) Remove the screw that secures the lower tilting steering column shroud to the steering column multi-function switch mounting housing (Fig. 3).

(13) Unsnap the two halves of the tilting steering column shroud from each other and remove both halves from the steering column.

(14) Disconnect the instrument panel wire harness connectors from the following steering column components (Fig. 4):

- the two lower clockspring connector receptacles
- the left multi-function switch connector receptacle
- the right multi-function switch connector receptacle
- the two ignition switch connector receptacles
- the shifter interlock solenoid connector receptacle

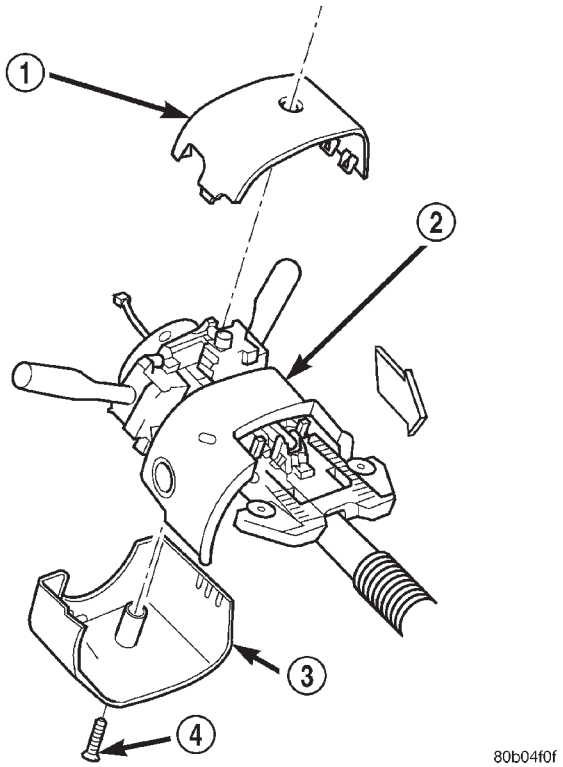

Fig. 3 Steering Column Shrouds Remove/Install

1 - UPPER TILTING COLUMN SHROUD
2 - FIXED COLUMN SHROUD
3 - LOWER TILTING COLUMN SHROUD
4 - SCREW

INSTRUMENT PANEL SYSTEM (Continued)

• if the vehicle is so equipped, the Sentry Key Immobilizer Module (SKIM) connector receptacle.

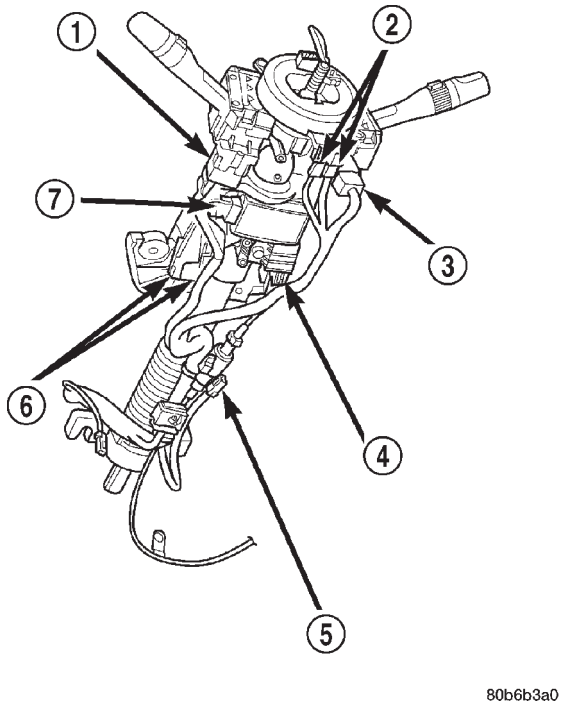

Fig. 4 Steering Column Connections

1 - LEFT MULTIFUNCTION SWITCH CONNECTOR
2 - LOWER CLOCKSPRING CONNECTORS
3 - RIGHT MULTIFUNCTION SWITCH CONNECTOR
4 - SHIFTER INTERLOCK CABLE CONNECTOR
5 - SHIFTER INTERLOCK SOLENOID CONNECTOR
6 - IGNITION SWITCH CONNECTOR RECEPTACLES
7 - SKIM CONNECTOR

(15) Turn the ignition switch to the On position, then release and remove the shifter interlock cable connector from the ignition lock housing receptacle.

(16) Turn the ignition switch back to the Lock position to prevent steering wheel rotation and the loss of clockspring centering following steering column removal.

(17) Remove the bolt that secures the coupler to the lower steering column shaft (Fig. 5).

(18) Remove the four nuts that secure the steering column to the studs on the instrument panel steering column support bracket.

(19) Remove the steering column from the instrument panel. Be certain that the steering wheel is locked and secured from rotation to prevent the loss of clockspring centering.

(20) Disconnect the left and right body wire harness connectors, the Ignition Off Draw (IOD) wire harness connector and the fused B(+) wire harness connector from the connector receptacles of the JB (Fig. 6).

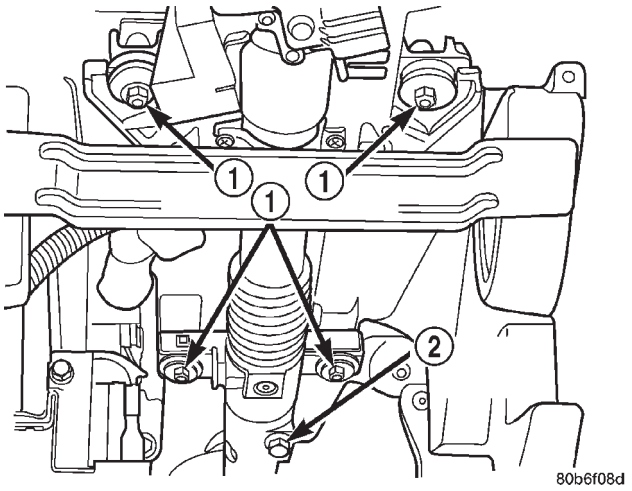

Fig. 5 Steering Column Mounting

1 - COLUMN MOUNTING NUTS
2 - COUPLER BOLT

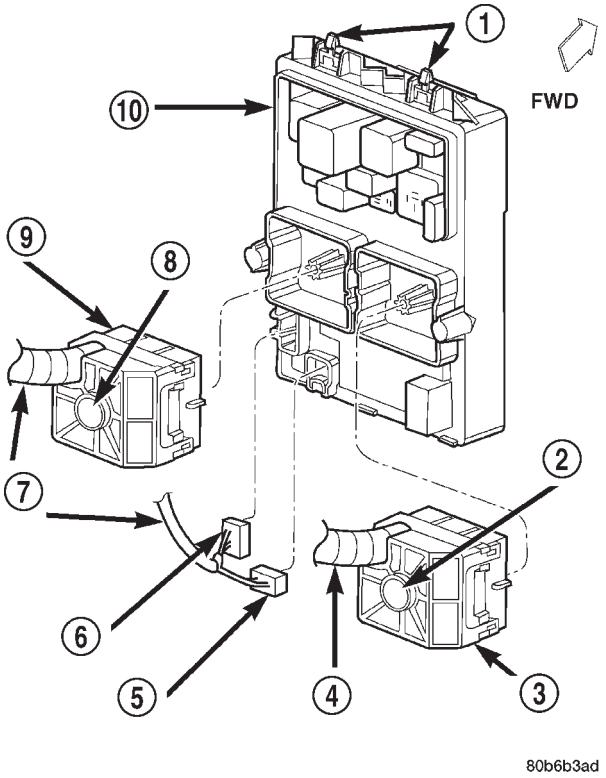

Fig. 6 Junction Block Connections

1 - SNAP CLIPS
2 - SCREW
3 - CONNECTOR
4 - LEFT BODY WIRE HARNESS
5 - IOD CONNECTOR
6 - FUSED B+ CONNECTOR
7 - RIGHT BODY WIRE HARNESS
8 - SCREW
9 - CONNECTOR
10 - JUNCTION BLOCK

INSTRUMENT PANEL SYSTEM (Continued)

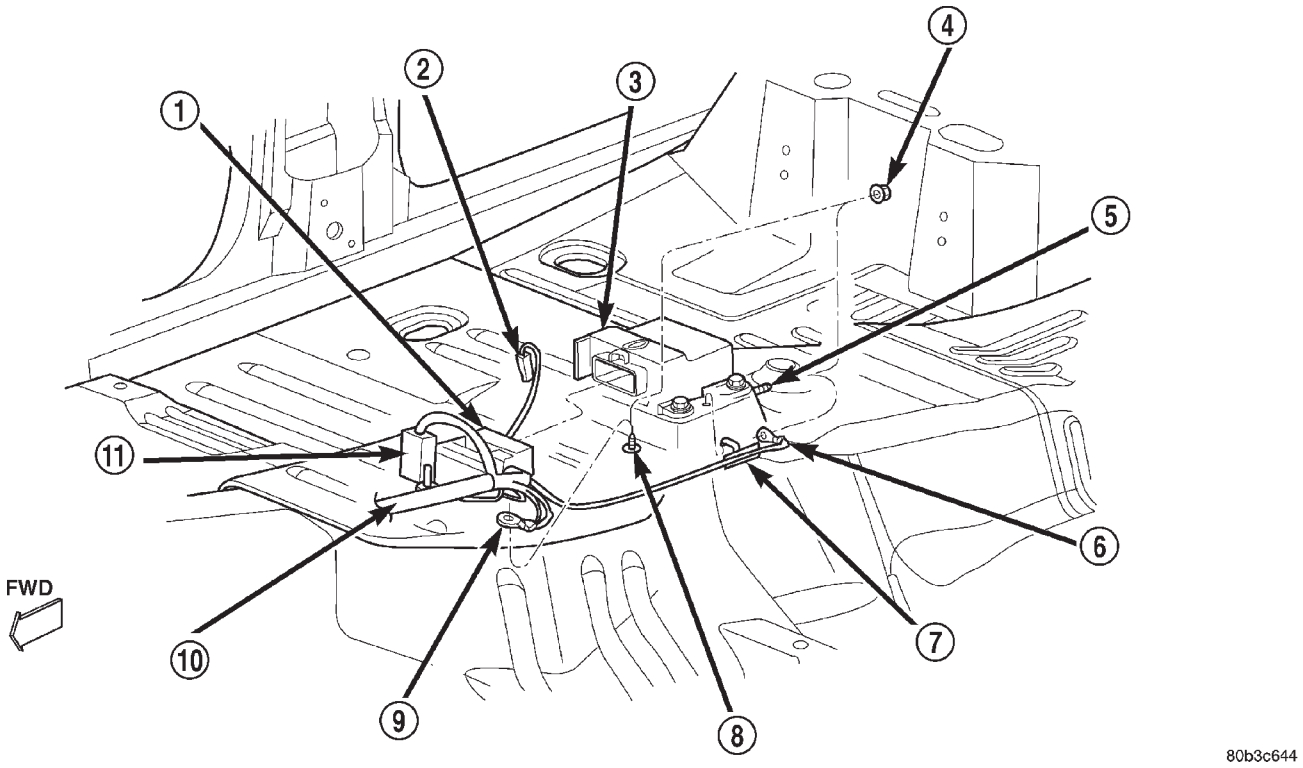

Fig. 7 Floor Panel Transmission Tunnel

1 - AIRBAG CONTROL MODULE CONNECTOR
2 - PARK BRAKE SWITCH CONNECTOR
3 - AIRBAG CONTROL MODULE
4 - NUT (2)
5 - STUD
6 - GROUND EYELET
7 - RETAINER
8 - STUD
9 - GROUND EYELET
10 - INSTRUMENT PANEL WIRE HARNESS
11 - TRANSMISSION SHIFTER CONNECTOR

(21) Disconnect the instrument panel wire harness connectors from the following floor panel transmission tunnel components (Fig. 7):

- the Airbag Control Module (ACM) connector receptacle
- the park brake switch terminal
- the transmission shifter connector receptacle.

(22) Remove the two nuts that secure the instrument panel wire harness ground eyelets to the studs on the floor panel transmission tunnel in front of and behind the ACM.

(23) Disengage the retainers that secure the instrument panel wire harness to the floor panel transmission tunnel.

(24) Remove the instrument panel to center floor tunnel bracket from the instrument panel and the floor panel transmission tunnel. (Refer to 23 - BODY/INSTRUMENT PANEL/IP CENTER FLOOR TUNNEL BRACKET - REMOVAL).

(25) Remove the one screw that secures the floor duct to the heater and air conditioner housing near the driver side of the floor panel transmission tunnel and remove the duct from the housing.

(26) If the vehicle is equipped with the manual heating and air conditioning system, disconnect the vacuum harness connector located near the driver side of the floor panel transmission tunnel behind the driver side floor duct.

(27) Remove the one screw that secures the instrument panel steering column support bracket to the driver side end of the heater and air conditioner housing (Fig. 8).

(28) Remove the one screw that secures the instrument panel steering column support bracket to the intermediate bracket on the driver side dash panel (Fig. 9).

(29) Remove the nut that secures the instrument panel steering column support bracket to the stud on the driver side cowl plenum panel (Fig. 10).

(30) Remove the two screws that secure the instrument panel to the driver side cowl side inner panel (Fig. 11).

(31) Remove the end cap from the instrument panel. (Refer to 23 - BODY/INSTRUMENT PANEL/INSTRUMENT PANEL END CAP - REMOVAL).

INSTRUMENT PANEL SYSTEM (Continued)

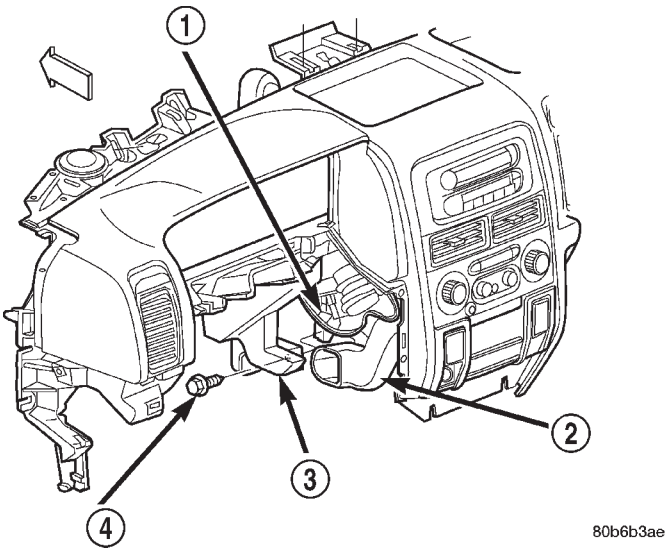

Fig. 8 Instrument Panel to Heater-A/C Housing - Driver Side

1 - HEATER AND AIR CONDITIONER HOUSING
2 - FLOOR DUCT
3 - INSTRUMENT PANEL STEERING COLUMN SUPPORT BRACKET
4 - SCREW

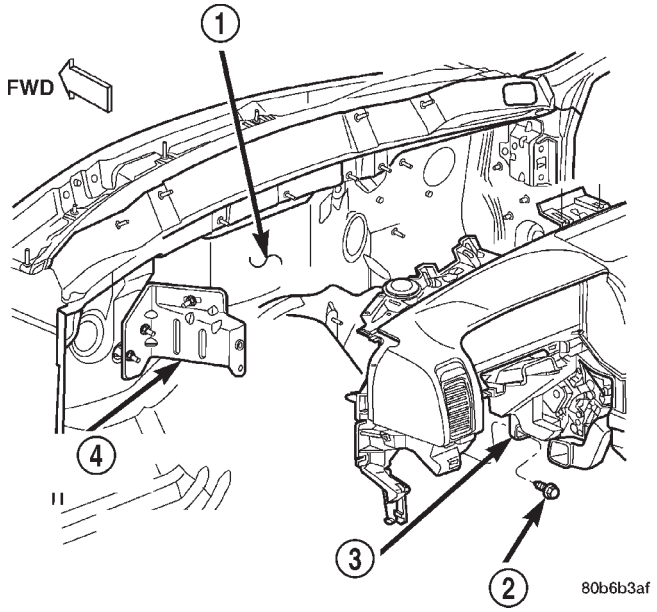

Fig. 9 Instrument Panel to Intermediate Bracket Mounting

1 - DASH PANEL
2 - SCREW
3 - INSTRUMENT PANEL STEERING COLUMN SUPPORT BRACKET
4 - INTERMEDIATE BRACKET

(32) Remove the lower right center bezel from the instrument panel. (Refer to 23 - BODY/INSTRUMENT PANEL/IP LOWER RIGHT CENTER BEZEL - REMOVAL).

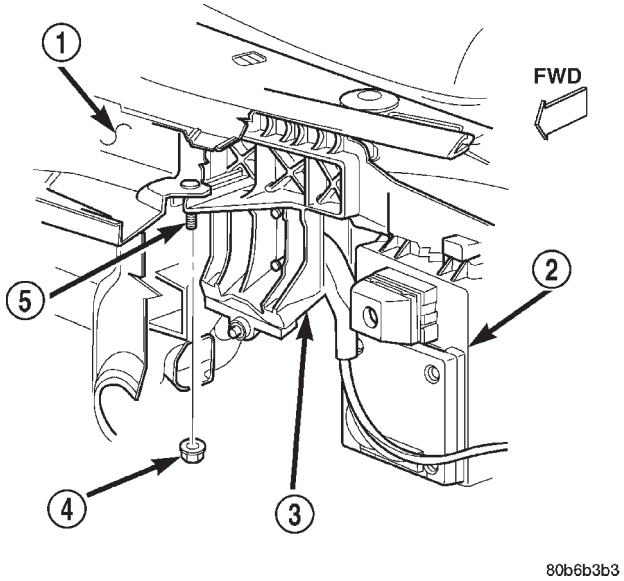

Fig. 10 Instrument Panel to Cowl Plenum Mounting

1 - COWL PLENUM PANEL
2 - JUNCTION BLOCK
3 - INSTRUMENT PANEL STEERING COLUMN SUPPORT BRACKET
4 - NUT
5 - STUD

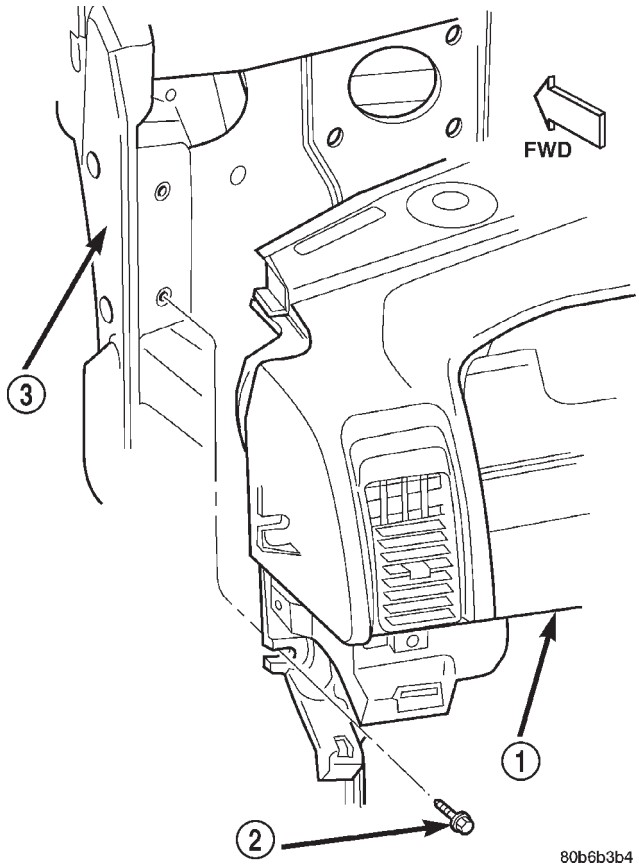

Fig. 11 Instrument Panel to Driver Side Cowl Side Inner Panel Mounting

1 - INSTRUMENT PANEL
2 - SCREW (2)
3 - COWL SIDE PANEL

INSTRUMENT PANEL SYSTEM (Continued)

(33) Disconnect the instrument panel wire harness connector from the lower cavity of the inline connector on the passenger side cowl side inner panel (Fig. 12).

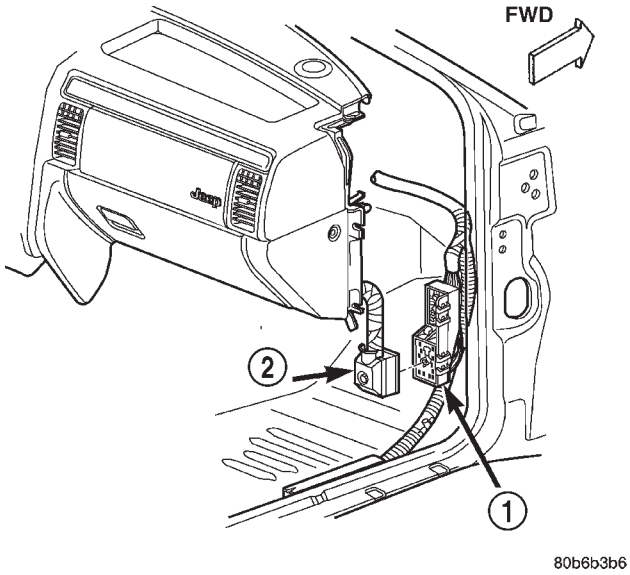

Fig. 12 Instrument Panel Passenger Side Connection

1 - INLINE CONNECTOR
2 - INSTRUMENT PANEL WIRE HARNESS CONNECTOR

(34) Disconnect the two halves of the radio antenna coaxial cable connector near the right cowl side inner panel under the end of the instrument panel.

(35) Disconnect the two instrument panel wire harness connectors from the two heater and air conditioner housing connectors located near the blower motor on the passenger side end of the housing (Fig. 13).

(36) Remove the two screws that secure the passenger side instrument panel structural duct to the heater and air conditioner housing (Fig. 14).

(37) Remove the two screws that secure the instrument panel to the passenger side cowl side inner panel (Fig. 15).

(38) With the aid of an assistant, lift the instrument panel assembly upward off of the studs on the dash panel near the windshield fence line and to disengage the molded plastic hook formations on the instrument panel structural duct from the guide holes at each cowl side inner panel.

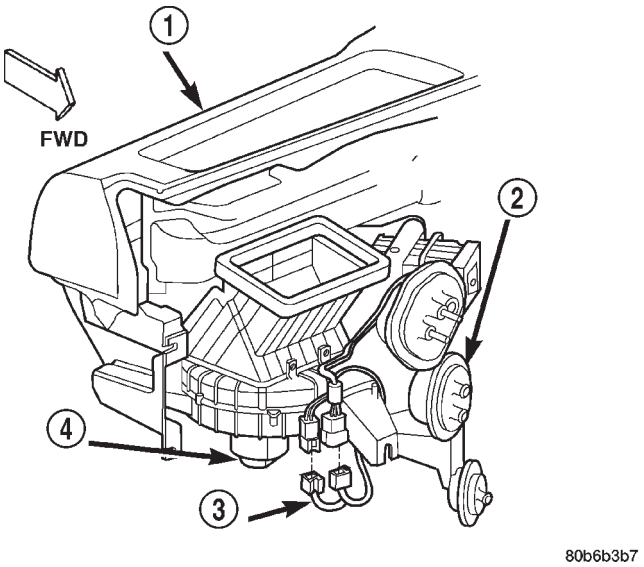

Fig. 13 Heater and Air Conditioner Housing Connections

1 - INSTRUMENT PANEL
2 - HVAC HOUSING
3 - INSTRUMENT PANEL WIRE HARNESS
4 - BLOWER MOTOR

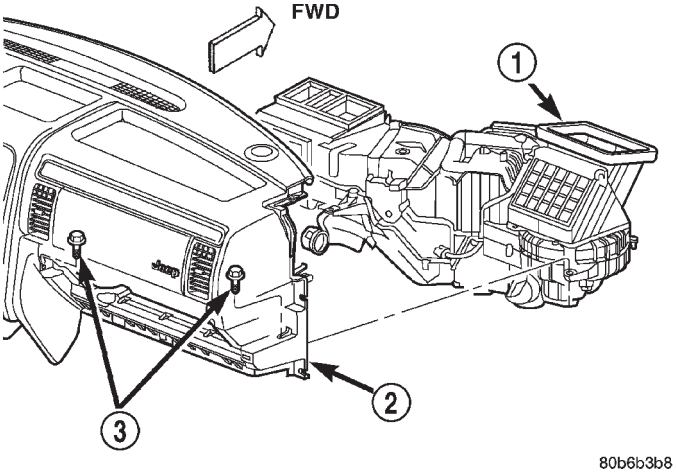

Fig. 14 Passenger Side Instrument Panel to Heater-A/C Housing Mounting

1 - HEATER AND AIR CONDITIONER HOUSING
2 - INSTRUMENT PANEL STRUCTURAL DUCT
3 - SCREW (2)

(39) Pull the instrument panel rearward from the dash panel and the cowl side inner panels and remove it through the driver side front door of the vehicle.

INSTRUMENT PANEL SYSTEM (Continued)

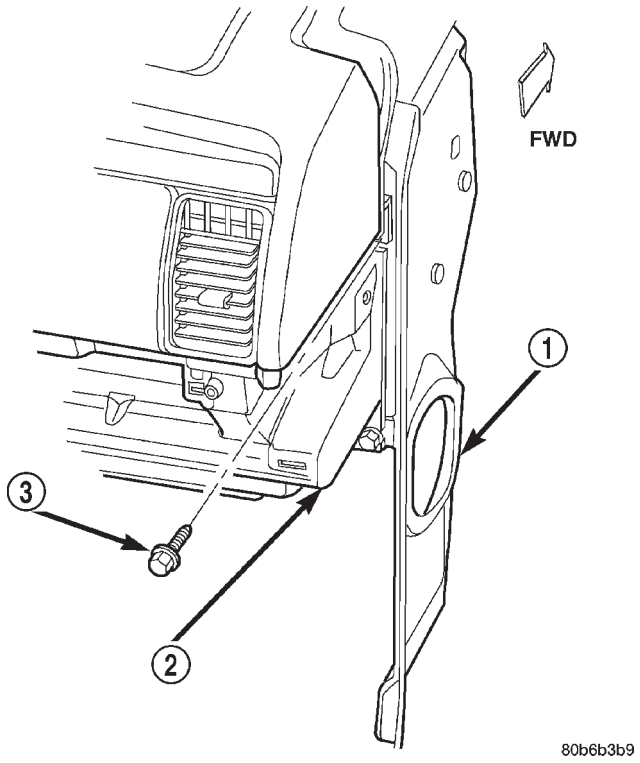

Fig. 15 Instrument Panel to Passenger Side Cowl Side Inner Panel Mounting

1 - COWL SIDE INNER PANEL
2 - INSTRUMENT PANEL STRUCTURAL DUCT
3 - SCREW (2)

INSTALLATION

WARNING: ON VEHICLES EQUIPPED WITH AIRBAGS, DISABLE THE AIRBAG SYSTEM BEFORE ATTEMPTING ANY STEERING WHEEL, STEERING COLUMN, OR INSTRUMENT PANEL COMPONENT DIAGNOSIS OR SERVICE. DISCONNECT AND ISOLATE THE BATTERY NEGATIVE (GROUND) CABLE, THEN WAIT TWO MINUTES FOR THE AIRBAG SYSTEM CAPACITOR TO DISCHARGE BEFORE PERFORMING FURTHER DIAGNOSIS OR SERVICE. THIS IS THE ONLY SURE WAY TO DISABLE THE AIRBAG SYSTEM. FAILURE TO TAKE THE PROPER PRECAUTIONS COULD RESULT IN ACCIDENTAL AIRBAG DEPLOYMENT AND POSSIBLE PERSONAL INJURY.

(1) Prior to installing the instrument panel into the vehicle, loosen the three nuts that secure the instrument panel intermediate bracket and the accelerator pedal assembly to the studs on the dash panel (Fig. 9).

(2) With the aid of an assistant, load the instrument panel assembly through the driver side front door of the vehicle and hang it on the studs on the dash panel near the windshield fence line (Fig. 2).

(3) Be certain that the molded plastic hook formations on the instrument panel structural duct are inserted into and seated in the guide holes at each cowl side inner panel.

(4) Loosely install the two screws that secure each end of the instrument panel to the cowl side inner panels.

(5) Install and tighten the two screws that secure the passenger side instrument panel structural duct to the heater and air conditioner housing (Fig. 14). Tighten the screws to 11.8 N·m (105 in. lbs.).

(6) Install and tighten the one screw that secures the instrument panel steering column support bracket to the driver side end of the heater and air conditioner housing (Fig. 8). Tighten the screw to 11.8 N·m (105 in. lbs.).

(7) Tighten the two screws that secure each end of the instrument panel to the cowl side inner panels (Fig. 11) and (Fig. 15). Tighten the screws to 11.8 N·m (105 in. lbs.).

(8) Install and tighten the one screw that secures the instrument panel steering column support bracket to the intermediate bracket on the driver side dash panel (Fig. 9). Tighten the screw to 11.3 N·m (100 in. lbs.).

(9) Tighten the three nuts that secure the instrument panel intermediate bracket and the accelerator pedal assembly to the studs on the dash panel. Tighten the nuts to 11.3 N·m (100 in. lbs.).

(10) Install and tighten the four nuts that secure the instrument panel to the studs on the dash panel near the windshield fence line. Tighten the nuts to 11.8 N·m (105 in. lbs.).

(11) Install and tighten the nut that secures the instrument panel steering column support bracket to the stud on the driver side cowl plenum panel (Fig. 10). Tighten the nut to 28.2 N·m (250 in. lbs.).

(12) Reinstall the instrument panel to center floor tunnel bracket onto the instrument panel and the floor panel transmission tunnel. (Refer to 23 - BODY/INSTRUMENT PANEL/IP CENTER FLOOR TUNNEL BRACKET - INSTALLATION).

(13) Reconnect the two instrument panel wire harness connectors to the two heater and air conditioner housing connectors located near the blower motor on the passenger side end of the housing (Fig. 13).

(14) Reconnect the two halves of the radio antenna coaxial cable connector near the right cowl side inner panel under the end of the instrument panel.

(15) Reconnect the instrument panel wire harness connector to the lower cavity of the inline connector on the passenger side cowl side inner panel and tighten the connector screw (Fig. 12). Tighten the screw to 4 N·m (36 in. lbs.).

INSTRUMENT PANEL SYSTEM (Continued)

(16) Reinstall the lower right center bezel onto the instrument panel. (Refer to 23 - BODY/INSTRUMENT PANEL/IP LOWER RIGHT CENTER BEZEL - INSTALLATION).

(17) Reinstall the end cap onto the instrument panel. (Refer to 23 - BODY/INSTRUMENT PANEL/INSTRUMENT PANEL END CAP - INSTALLATION).

(18) If the vehicle is equipped with the manual heating and air conditioning system, reconnect the vacuum harness connector located near the driver side of the floor panel transmission tunnel behind the driver side floor duct.

(19) Position the driver side floor duct to the heater and air conditioner housing near the driver side of the floor panel transmission tunnel (Fig. 8).

(20) Install and tighten the one screw that secures the driver side floor duct to the heater and air conditioner housing near the driver side of the floor panel transmission tunnel. Tighten the screw to 2.2 N·m (20 in. lbs.).

(21) Route the instrument panel wire harness to the floor panel transmission tunnel and engage the retainers that secure the harness to the mounting brackets on the tunnel (Fig. 7).

(22) Install the instrument panel wire harness ground eyelets to the studs on the floor panel transmission tunnel in front of and behind the airbag control module and secure the eyelets with nuts. Tighten the nuts to 7.3 N·m (65 in. lbs.).

(23) Reconnect the instrument panel wire harness connectors to the following floor panel transmission tunnel components:

- the Airbag Control Module (ACM) connector receptacle
- the park brake switch terminal
- the transmission shifter connector receptacle.

(24) Reconnect the left and right body wire harness connectors, the Ignition Off Draw (IOD) wire harness connector and the fused B(+) wire harness connector to the connector receptacles of the Junction Block (JB) and tighten the connector screws (Fig. 6). Tighten the screws to 4 N·m (36 in. lbs.).

(25) Engage the lower steering column shaft with the steering shaft coupler and position the steering column to the mounting studs on the instrument panel steering column support bracket (Fig. 5).

(26) Install and tighten the four nuts that secure the steering column to the studs on the instrument panel steering column support bracket. Tighten the nuts to 11.8 N·m (105 in. lbs.).

(27) Install and tighten the bolt that secures the coupler to the lower steering column shaft. Tighten the bolt to 49 N·m (36 ft. lbs.).

(28) Turn the ignition switch to the On position, then install the shifter interlock cable connector into the ignition lock housing receptacle.

(29) Reconnect the instrument panel wire harness connectors to the following steering column components (Fig. 4):

- the two lower clockspring connector receptacles
- the left multi-function switch connector receptacle
- the right multi-function switch connector receptacle
- the two ignition switch connector receptacles
- the shifter interlock solenoid connector receptacle
- if the vehicle is so equipped, the Sentry Key Immobilizer Module (SKIM) connector receptacle.

(30) Position the lower tilting steering column shroud to the steering column multi-function switch mounting housing, then install and tighten the screw that secures the shroud to the housing (Fig. 3). Tighten the screw to 1.9 N·m (17 in. lbs.).

(31) Position the upper tilting steering column shroud over the steering column. Align the upper and lower shrouds with each other and snap the two halves together.

(32) Reinstall the steering column bracket onto the instrument panel steering column support bracket. (Refer to 23 - BODY/INSTRUMENT PANEL/IP STEERING COLUMN BRACKET - INSTALLATION).

(33) Reinstall the steering column opening cover onto the instrument panel. (Refer to 23 - BODY/INSTRUMENT PANEL/STEERING COLUMN OPENING COVER - INSTALLATION).

(34) Reinstall the cluster bezel onto the instrument panel. (Refer to 23 - BODY/INSTRUMENT PANEL/CLUSTER BEZEL - INSTALLATION).

(35) Reinstall the fuse cover onto the Junction Block (JB). (Refer to 8 - ELECTRICAL/POWER DISTRIBUTION/FUSE COVER - INSTALLATION).

(36) Reinstall the console onto the floor panel transmission tunnel. (Refer to 23 - BODY/INTERIOR/FLOOR CONSOLE - INSTALLATION).

(37) Reinstall the trim panels onto the right and left inner cowl sides. (Refer to 23 - BODY/INTERIOR/COWL TRIM - INSTALLATION).

(38) Reinstall the scuff plates onto the right and left front door sills. (Refer to 23 - BODY/INTERIOR/DOOR SILL SCUFF PLATE - INSTALLATION).

(39) Reinstall the top cover onto the instrument panel. (Refer to 23 - BODY/INSTRUMENT PANEL/INSTRUMENT PANEL TOP COVER - INSTALLATION).

(40) Reinstall the trim onto the right and left A-pillars. (Refer to 23 - BODY/INTERIOR/A-PILLAR TRIM - INSTALLATION).

(41) Reconnect the battery negative cable.

CLUSTER BEZEL

REMOVAL

WARNING: ON VEHICLES EQUIPPED WITH AIRBAGS, DISABLE THE AIRBAG SYSTEM BEFORE ATTEMPTING ANY STEERING WHEEL, STEERING COLUMN, OR INSTRUMENT PANEL COMPONENT DIAGNOSIS OR SERVICE. DISCONNECT AND ISOLATE THE BATTERY NEGATIVE (GROUND) CABLE, THEN WAIT TWO MINUTES FOR THE AIRBAG SYSTEM CAPACITOR TO DISCHARGE BEFORE PERFORMING FURTHER DIAGNOSIS OR SERVICE. THIS IS THE ONLY SURE WAY TO DISABLE THE AIRBAG SYSTEM. FAILURE TO TAKE THE PROPER PRECAUTIONS COULD RESULT IN ACCIDENTAL AIRBAG DEPLOYMENT AND POSSIBLE PERSONAL INJURY.

(1) Disconnect and isolate the battery negative cable.

(2) Place the tilt steering wheel in its fully lowered position.

(3) Using a trim stick or another suitable wide flat-bladed tool, gently pry each of the four corners of the cluster bezel away from the instrument panel far enough to disengage the four snap clips from their receptacles (Fig. 16).

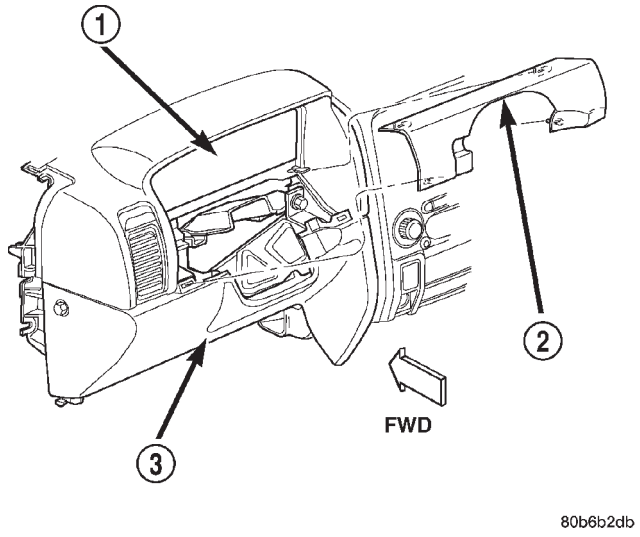

Fig. 16 Cluster Bezel Remove/Install

1 - INSTRUMENT CLUSTER
2 - INSTRUMENT PANEL CLUSTER BEZEL
3 - STEERING COLUMN OPENING COVER

(4) Being certain not to scratch the instrument cluster lens with the two snap clips on the lower edge of the cluster bezel, roll the top of the cluster bezel rearward over the top of the steering column.

(5) If the vehicle is so equipped, reach behind the cluster bezel to access and disconnect the instrument panel wire harness connector for the headlamp leveling switch from the switch connector receptacle.

(6) Remove the cluster bezel from the instrument panel.

INSTALLATION

WARNING: ON VEHICLES EQUIPPED WITH AIRBAGS, DISABLE THE AIRBAG SYSTEM BEFORE ATTEMPTING ANY STEERING WHEEL, STEERING COLUMN, OR INSTRUMENT PANEL COMPONENT DIAGNOSIS OR SERVICE. DISCONNECT AND ISOLATE THE BATTERY NEGATIVE (GROUND) CABLE, THEN WAIT TWO MINUTES FOR THE AIRBAG SYSTEM CAPACITOR TO DISCHARGE BEFORE PERFORMING FURTHER DIAGNOSIS OR SERVICE. THIS IS THE ONLY SURE WAY TO DISABLE THE AIRBAG SYSTEM. FAILURE TO TAKE THE PROPER PRECAUTIONS COULD RESULT IN ACCIDENTAL AIRBAG DEPLOYMENT AND POSSIBLE PERSONAL INJURY.

(1) Position the cluster bezel onto the instrument panel (Fig. 16).

(2) If the vehicle is so equipped, reach behind the cluster bezel to access and reconnect the instrument panel wire harness connector for the headlamp leveling switch to the switch connector receptacle.

(3) Being certain not to scratch the instrument cluster lens with the two snap clips on the lower edge of the cluster bezel, slide the lower edge of the cluster bezel forward and down over the top of the steering column to position it onto the instrument panel.

(4) Align the two snap clips on the lower edge of the cluster bezel with their receptacles in the instrument panel.

(5) Press firmly on the cluster bezel over each of the lower snap clip locations until each of the snap clips is fully engaged in its receptacle.

(6) Align the two receptacles on the upper edge of the cluster bezel with the snap clips on the instrument panel.

(7) Press firmly on the cluster bezel over each of the upper snap clip locations until each of the snap clips is fully engaged in its receptacle.

(8) Reconnect the battery negative cable.

GLOVE BOX

STANDARD PROCEDURE - GLOVE BOX ROLL DOWN

WARNING: ON VEHICLES EQUIPPED WITH AIRBAGS, DISABLE THE AIRBAG SYSTEM BEFORE ATTEMPTING ANY STEERING WHEEL, STEERING COLUMN, OR INSTRUMENT PANEL COMPONENT DIAGNOSIS OR SERVICE. DISCONNECT AND ISOLATE THE BATTERY NEGATIVE (GROUND) CABLE, THEN WAIT TWO MINUTES FOR THE AIRBAG SYSTEM CAPACITOR TO DISCHARGE BEFORE PERFORMING FURTHER DIAGNOSIS OR SERVICE. THIS IS THE ONLY SURE WAY TO DISABLE THE AIRBAG SYSTEM. FAILURE TO TAKE THE PROPER PRECAUTIONS COULD RESULT IN ACCIDENTAL AIRBAG DEPLOYMENT AND POSSIBLE PERSONAL INJURY.

(1) Disconnect and isolate the battery negative cable.

(2) Open the glove box until the integral stops on the back edge of the glove box bin are resting against the rubber stop bumpers in the upper glove box opening reinforcement.

(3) Reach into the glove box and with the middle finger of each hand, deflect the rubber flap of the two glove box stop bumpers on the upper glove box opening reinforcement toward the front of the vehicle.

(4) With the glove box stop bumpers deflected, roll the glove box door downward until the integral stops on the back edge of the glove box bin pass through the rubber stop bumper openings in the upper glove box opening reinforcement (Fig. 17)

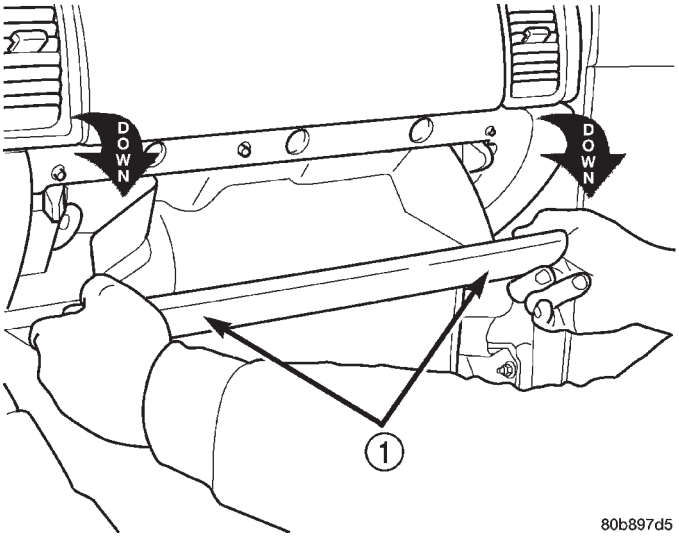

Fig. 17 Glove Box Roll Down

1 - GLOVE BOX DOOR

(5) The rubber stop bumpers will be deflected automatically by the integral stops on the back of the glove box when the glove box is rolled back up into the instrument panel.

REMOVAL

WARNING: ON VEHICLES EQUIPPED WITH AIRBAGS, DISABLE THE AIRBAG SYSTEM BEFORE ATTEMPTING ANY STEERING WHEEL, STEERING COLUMN, OR INSTRUMENT PANEL COMPONENT DIAGNOSIS OR SERVICE. DISCONNECT AND ISOLATE THE BATTERY NEGATIVE (GROUND) CABLE, THEN WAIT TWO MINUTES FOR THE AIRBAG SYSTEM CAPACITOR TO DISCHARGE BEFORE PERFORMING FURTHER DIAGNOSIS OR SERVICE. THIS IS THE ONLY SURE WAY TO DISABLE THE AIRBAG SYSTEM. FAILURE TO TAKE THE PROPER PRECAUTIONS COULD RESULT IN ACCIDENTAL AIRBAG DEPLOYMENT AND POSSIBLE PERSONAL INJURY.

(1) Disconnect and isolate the battery negative cable.

(2) Roll the glove box down from the instrument panel. (Refer to 23 - BODY/INSTRUMENT PANEL/ GLOVE BOX - STANDARD PROCEDURE - GLOVE BOX ROLL DOWN).

NOTE: Be certain to use care not to damage or remove the glove box hinge bumpers on the lower instrument panel glove box opening reinforcement when removing the glove box from the instrument panel.

(3) Firmly grip both ends of the glove box door, then twist and pull the door as necessary to disengage the inboard hinge hook from the inboard hinge pin on the instrument panel and reorient the hook to the underside of the hinge pin (Fig. 18).

(4) Raise the glove box door until it is perpendicular to the instrument panel.

(5) Twist the door slightly in the counterclockwise direction and use a jiggling action to disengage the remaining two hinge hooks from their respective hinge pins on the instrument panel.

(6) Remove the glove box from the instrument panel.

GLOVE BOX (Continued)

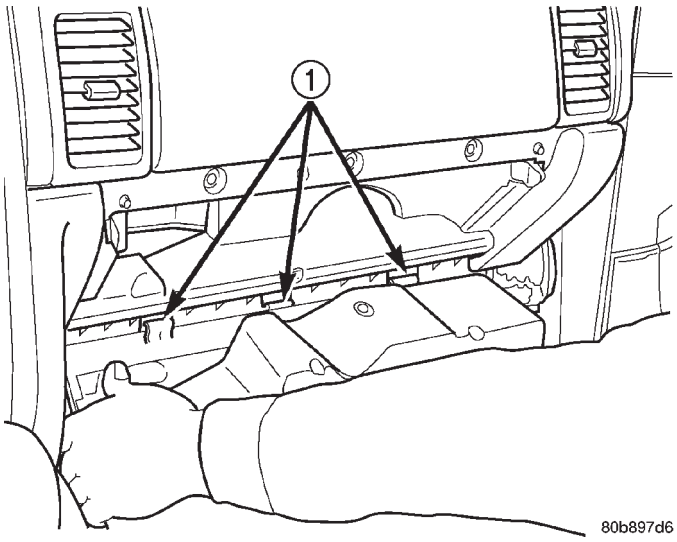

Fig. 18 Glove Box Remove/Install

1 - GLOVE BOX HINGE HOOKS AND HINGE PINS (3)

INSTALLATION

WARNING: ON VEHICLES EQUIPPED WITH AIRBAGS, DISABLE THE AIRBAG SYSTEM BEFORE ATTEMPTING ANY STEERING WHEEL, STEERING COLUMN, OR INSTRUMENT PANEL COMPONENT DIAGNOSIS OR SERVICE. DISCONNECT AND ISOLATE THE BATTERY NEGATIVE (GROUND) CABLE, THEN WAIT TWO MINUTES FOR THE AIRBAG SYSTEM CAPACITOR TO DISCHARGE BEFORE PERFORMING FURTHER DIAGNOSIS OR SERVICE. THIS IS THE ONLY SURE WAY TO DISABLE THE AIRBAG SYSTEM. FAILURE TO TAKE THE PROPER PRECAUTIONS COULD RESULT IN ACCIDENTAL AIRBAG DEPLOYMENT AND POSSIBLE PERSONAL INJURY.

NOTE: Be certain to use care not to damage or remove the glove box hinge bumpers on the lower instrument panel glove box opening reinforcement when installing the glove box onto the instrument panel.

(1) Position the glove box to the instrument panel with the outboard hinge hook oriented over the outboard hinge pin and the center hinge hook oriented under the center hinge pin (Fig. 18).

(2) Raise the glove box door until it is perpendicular to the instrument panel.

(3) Firmly grip both ends of the glove box door and twist the door slightly in the clockwise direction to engage the inboard glove box hinge hook over the inboard hinge pin on the instrument panel.

(4) Roll the glove box back up into the instrument panel. (Refer to 23 - BODY/INSTRUMENT PANEL/ GLOVE BOX - STANDARD PROCEDURE - GLOVE BOX ROLL DOWN).

(5) Reconnect the battery negative cable.

GLOVE BOX LATCH

REMOVAL

WARNING: ON VEHICLES EQUIPPED WITH AIRBAGS, DISABLE THE AIRBAG SYSTEM BEFORE ATTEMPTING ANY STEERING WHEEL, STEERING COLUMN, OR INSTRUMENT PANEL COMPONENT DIAGNOSIS OR SERVICE. DISCONNECT AND ISOLATE THE BATTERY NEGATIVE (GROUND) CABLE, THEN WAIT TWO MINUTES FOR THE AIRBAG SYSTEM CAPACITOR TO DISCHARGE BEFORE PERFORMING FURTHER DIAGNOSIS OR SERVICE. THIS IS THE ONLY SURE WAY TO DISABLE THE AIRBAG SYSTEM. FAILURE TO TAKE THE PROPER PRECAUTIONS COULD RESULT IN ACCIDENTAL AIRBAG DEPLOYMENT AND POSSIBLE PERSONAL INJURY.

(1) Disconnect and isolate the battery negative cable.

(2) Roll down the glove box from the instrument panel. (Refer to 23 - BODY/INSTRUMENT PANEL/ GLOVE BOX - STANDARD PROCEDURE - GLOVE BOX ROLL DOWN).

(3) Remove the three screws that secure the glove box latch to the inner glove box door (Fig. 19).

(4) Lift up on the latch handle on the outer glove box door far enough to loosen the latch assembly on the inner glove box door.

(5) Remove the latch unit from the inner glove box door.

INSTALLATION

WARNING: ON VEHICLES EQUIPPED WITH AIRBAGS, DISABLE THE AIRBAG SYSTEM BEFORE ATTEMPTING ANY STEERING WHEEL, STEERING COLUMN, OR INSTRUMENT PANEL COMPONENT DIAGNOSIS OR SERVICE. DISCONNECT AND ISOLATE THE BATTERY NEGATIVE (GROUND) CABLE, THEN WAIT TWO MINUTES FOR THE AIRBAG SYSTEM CAPACITOR TO DISCHARGE BEFORE PERFORMING FURTHER DIAGNOSIS OR SERVICE. THIS IS THE ONLY SURE WAY TO DISABLE THE AIRBAG SYSTEM. FAILURE TO TAKE THE PROPER PRECAUTIONS COULD RESULT IN ACCIDENTAL AIRBAG DEPLOYMENT AND POSSIBLE PERSONAL INJURY.

GLOVE BOX LATCH (Continued)

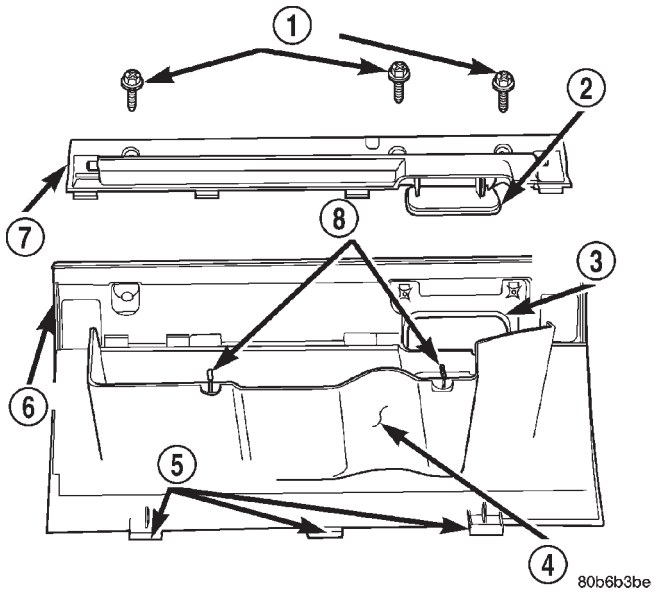

Fig. 19 Glove Box Latch Remove/Install

1 - SCREW (3)
2 - LATCH HANDLE
3 - LATCH HANDLE POCKET
4 - BIN
5 - HINGE HOOKS
6 - DOOR
7 - GLOVE BOX LATCH
8 - STOPS

(1) Position the latch unit to the inner glove box door (Fig. 19).

(2) Guide the latch handle into the latch handle pocket on the outer glove box door.

(3) Install and tighten the three screws that secure the glove box latch to the inner glove box door. Tighten the screws to 2.2 N·m (20 in. lbs.).

(4) Roll the glove box back up into the instrument panel. (Refer to 23 - BODY/INSTRUMENT PANEL/ GLOVE BOX - STANDARD PROCEDURE - GLOVE BOX ROLL DOWN).

(5) Reconnect the battery negative cable.

GLOVE BOX LATCH STRIKER

REMOVAL

WARNING: ON VEHICLES EQUIPPED WITH AIRBAGS, DISABLE THE AIRBAG SYSTEM BEFORE ATTEMPTING ANY STEERING WHEEL, STEERING COLUMN, OR INSTRUMENT PANEL COMPONENT DIAGNOSIS OR SERVICE. DISCONNECT AND ISOLATE THE BATTERY NEGATIVE (GROUND) CABLE, THEN WAIT TWO MINUTES FOR THE AIRBAG SYSTEM CAPACITOR TO DISCHARGE BEFORE PERFORMING FURTHER DIAGNOSIS OR SERVICE. THIS IS THE ONLY SURE WAY TO DISABLE THE AIRBAG SYSTEM. FAILURE TO TAKE THE PROPER PRECAUTIONS COULD RESULT IN ACCIDENTAL AIRBAG DEPLOYMENT AND POSSIBLE PERSONAL INJURY.

(1) Disconnect and isolate the battery negative cable.

(2) If the inboard glove box latch striker is being serviced, remove the lower right center bezel from the instrument panel. (Refer to 23 - BODY/INSTRUMENT PANEL/IP LOWER RIGHT CENTER BEZEL - REMOVAL). If the outboard glove box latch striker is being serviced, remove the end cap from the instrument panel. (Refer to 23 - BODY/INSTRUMENT PANEL/INSTRUMENT PANEL END CAP - REMOVAL).

(3) Remove the one screw that secures the upper mounting flange of the glove box latch striker to the instrument panel structural duct at either side of the glove box opening (Fig. 20).

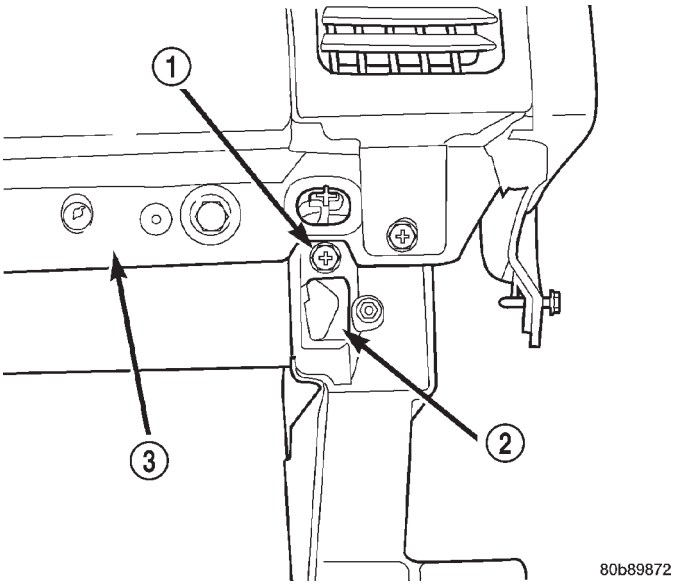

Fig. 20 Glove Box Latch Striker Remove/Install

1 - SCREW
2 - GLOVE BOX LATCH STRIKER
3 - INSTRUMENT PANEL TOP PAD

(4) Pull the upper mounting flange of the glove box latch striker downward to disengage the hook formation on the lower end of the striker from the mounting hole in the instrument panel structural duct.

(5) Remove the glove box latch striker from the instrument panel.

GLOVE BOX LATCH STRIKER (Continued)

INSTALLATION

WARNING: ON VEHICLES EQUIPPED WITH AIRBAGS, DISABLE THE AIRBAG SYSTEM BEFORE ATTEMPTING ANY STEERING WHEEL, STEERING COLUMN, OR INSTRUMENT PANEL COMPONENT DIAGNOSIS OR SERVICE. DISCONNECT AND ISOLATE THE BATTERY NEGATIVE (GROUND) CABLE, THEN WAIT TWO MINUTES FOR THE AIRBAG SYSTEM CAPACITOR TO DISCHARGE BEFORE PERFORMING FURTHER DIAGNOSIS OR SERVICE. THIS IS THE ONLY SURE WAY TO DISABLE THE AIRBAG SYSTEM. FAILURE TO TAKE THE PROPER PRECAUTIONS COULD RESULT IN ACCIDENTAL AIRBAG DEPLOYMENT AND POSSIBLE PERSONAL INJURY.

(1) Position the glove box latch striker to the instrument panel.

(2) Engage the hook formation on the lower end of the glove box latch striker in the mounting hole in the instrument panel structural duct.

(3) Roll the upper mounting flange of the glove box latch striker upward until it is flush with the instrument panel structural duct on either side of the glove box opening.

(4) Install and tighten the screw that secures the upper mounting flange of the glove box latch striker to the instrument panel structural duct (Fig. 20). Tighten the screw to 2.2 N·m (20 in. lbs.).

(5) If the inboard glove box latch striker was serviced, reinstall the lower right center bezel onto the instrument panel. (Refer to 23 - BODY/INSTRUMENT PANEL/IP LOWER RIGHT CENTER BEZEL - INSTALLATION). If the outboard glove box latch striker was serviced, reinstall the end cap onto the instrument panel. (Refer to 23 - BODY/INSTRUMENT PANEL/INSTRUMENT PANEL END CAP - INSTALLATION).

(6) Reconnect the battery negative cable.

INSTRUMENT PANEL END CAP

REMOVAL

WARNING: ON VEHICLES EQUIPPED WITH AIRBAGS, DISABLE THE AIRBAG SYSTEM BEFORE ATTEMPTING ANY STEERING WHEEL, STEERING COLUMN, OR INSTRUMENT PANEL COMPONENT DIAGNOSIS OR SERVICE. DISCONNECT AND ISOLATE THE BATTERY NEGATIVE (GROUND) CABLE, THEN WAIT TWO MINUTES FOR THE AIRBAG SYSTEM CAPACITOR TO DISCHARGE BEFORE PERFORMING FURTHER DIAGNOSIS OR SERVICE. THIS IS THE ONLY SURE WAY TO DISABLE THE AIRBAG SYSTEM. FAILURE TO TAKE THE PROPER PRECAUTIONS COULD RESULT IN ACCIDENTAL AIRBAG DEPLOYMENT AND POSSIBLE PERSONAL INJURY.

(1) Disconnect and isolate the battery negative cable.

(2) Unlatch and open the glove box.

(3) Remove the one screw that secures the outboard end of the end cap to the instrument panel top pad (Fig. 21).

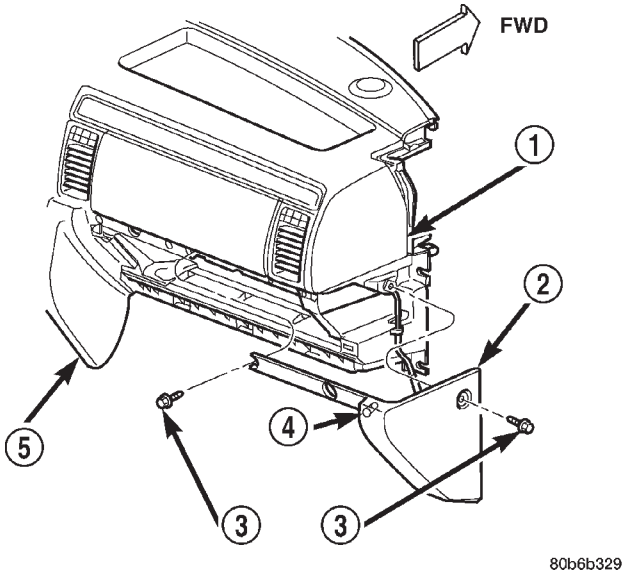

Fig. 21 Instrument Panel End Cap Remove/Install

1 - INSTRUMENT PANEL TOP PAD
2 - END CAP
3 - SCREW (4)
4 - BUMPER
5 - LOWER RIGHT CENTER BEZEL

(4) Remove the three screws that secure the end cap to the instrument panel glove box opening.

(5) Pull the end cap straight back from the instrument panel to disengage the one snap clip that secures it to the receptacle in the instrument panel structural duct.

(6) Remove the end cap from the instrument panel.

INSTRUMENT PANEL END CAP (Continued)

INSTALLATION

WARNING: ON VEHICLES EQUIPPED WITH AIRBAGS, DISABLE THE AIRBAG SYSTEM BEFORE ATTEMPTING ANY STEERING WHEEL, STEERING COLUMN, OR INSTRUMENT PANEL COMPONENT DIAGNOSIS OR SERVICE. DISCONNECT AND ISOLATE THE BATTERY NEGATIVE (GROUND) CABLE, THEN WAIT TWO MINUTES FOR THE AIRBAG SYSTEM CAPACITOR TO DISCHARGE BEFORE PERFORMING FURTHER DIAGNOSIS OR SERVICE. THIS IS THE ONLY SURE WAY TO DISABLE THE AIRBAG SYSTEM. FAILURE TO TAKE THE PROPER PRECAUTIONS COULD RESULT IN ACCIDENTAL AIRBAG DEPLOYMENT AND POSSIBLE PERSONAL INJURY.

(1) Be certain that the glove box catch bumper is installed in the mounting hole nearest the outboard end of the end cap extension over the instrument panel upper glove box opening reinforcement (Fig. 21).

(2) Position the end cap to the instrument panel. Be certain that the end of the end cap extension near the center of the upper glove box opening reinforcement is positioned underneath the end of the extension from the lower right center bezel.

(3) Align the snap clip on the end cap with the receptacle on the instrument panel structural duct.

(4) Press firmly on the instrument panel end cap over the snap clip location until the snap clip is fully engaged in its receptacle.

(5) Install and tighten the three screws that secure the end cap to the instrument panel glove box opening. Tighten the screws to 2.2 N·m (20 in. lbs.).

(6) Install and tighten the one screw that secures the outboard end of the end cap to the instrument panel top pad. Tighten the screw to 2.2 N·m (20 in. lbs.).

(7) Close and latch the glove box.

(8) Reconnect the battery negative cable.

INSTRUMENT PANEL STUCTURAL DUCT

REMOVAL

WARNING: ON VEHICLES EQUIPPED WITH AIRBAGS, DISABLE THE AIRBAG SYSTEM BEFORE ATTEMPTING ANY STEERING WHEEL, STEERING COLUMN, OR INSTRUMENT PANEL COMPONENT DIAGNOSIS OR SERVICE. DISCONNECT AND ISOLATE THE BATTERY NEGATIVE (GROUND) CABLE, THEN WAIT TWO MINUTES FOR THE AIRBAG SYSTEM CAPACITOR TO DISCHARGE BEFORE PERFORMING FURTHER DIAGNOSIS OR SERVICE. THIS IS THE ONLY SURE WAY TO DISABLE THE AIRBAG SYSTEM. FAILURE TO TAKE THE PROPER PRECAUTIONS COULD RESULT IN ACCIDENTAL AIRBAG DEPLOYMENT AND POSSIBLE PERSONAL INJURY.

(1) Disconnect and isolate the battery negative cable.

(2) Remove the instrument panel from the vehicle. (Refer to 23 - BODY/INSTRUMENT PANEL - REMOVAL).

(3) Place the instrument panel on a suitable work surface. Be certain to take the proper precautions to protect the instrument panel from any possible cosmetic damage.

(4) Remove all of the individual components that remain secured to the instrument panel structural duct as described elsewhere in this service information.

INSTALLATION

WARNING: ON VEHICLES EQUIPPED WITH AIRBAGS, DISABLE THE AIRBAG SYSTEM BEFORE ATTEMPTING ANY STEERING WHEEL, STEERING COLUMN, OR INSTRUMENT PANEL COMPONENT DIAGNOSIS OR SERVICE. DISCONNECT AND ISOLATE THE BATTERY NEGATIVE (GROUND) CABLE, THEN WAIT TWO MINUTES FOR THE AIRBAG SYSTEM CAPACITOR TO DISCHARGE BEFORE PERFORMING FURTHER DIAGNOSIS OR SERVICE. THIS IS THE ONLY SURE WAY TO DISABLE THE AIRBAG SYSTEM. FAILURE TO TAKE THE PROPER PRECAUTIONS COULD RESULT IN ACCIDENTAL AIRBAG DEPLOYMENT AND POSSIBLE PERSONAL INJURY.

(1) Reinstall all of the individual components that were removed from the instrument panel structural duct as described elsewhere in this service information.

(2) Reinstall the instrument panel into the vehicle. (Refer to 23 - BODY/INSTRUMENT PANEL - INSTALLATION).

(3) Reconnect the battery negative cable.

INSTRUMENT PANEL TOP COVER

REMOVAL

WARNING: ON VEHICLES EQUIPPED WITH AIRBAGS, DISABLE THE AIRBAG SYSTEM BEFORE ATTEMPTING ANY STEERING WHEEL, STEERING COLUMN, OR INSTRUMENT PANEL COMPONENT DIAGNOSIS OR SERVICE. DISCONNECT AND ISOLATE THE BATTERY NEGATIVE (GROUND) CABLE, THEN WAIT TWO MINUTES FOR THE AIRBAG SYSTEM CAPACITOR TO DISCHARGE BEFORE PERFORMING FURTHER DIAGNOSIS OR SERVICE. THIS IS THE ONLY SURE WAY TO DISABLE THE AIRBAG SYSTEM. FAILURE TO TAKE THE PROPER PRECAUTIONS COULD RESULT IN ACCIDENTAL AIRBAG DEPLOYMENT AND POSSIBLE PERSONAL INJURY.

(1) Disconnect and isolate the battery negative cable.

(2) Using a trim stick or another suitable wide flat-bladed tool, gently pry the rear edge (farthest from the windshield) of the top cover up and away from the instrument panel far enough to disengage the four snap clip retainers from their receptacles in the instrument panel top pad (Fig. 22).

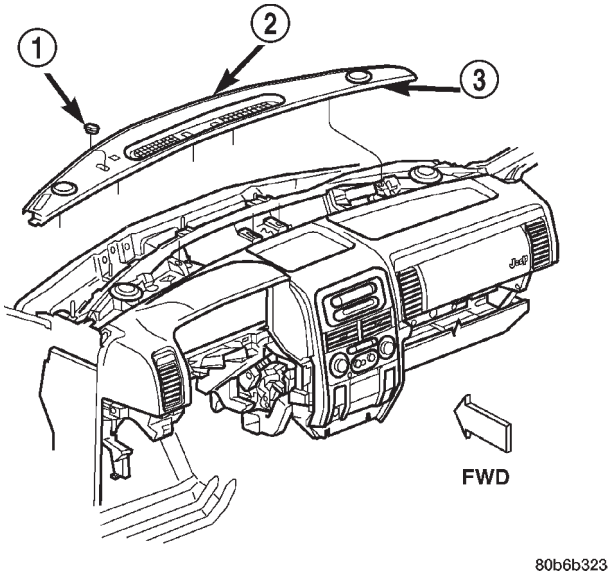

Fig. 22 Instrument Panel Top Cover Remove/Install

1 - ULTRA LIGHT SENSOR PLUG
2 - SEAL
3 - INSTRUMENT PANEL TOP COVER

(3) Remove the top cover from the top of the instrument panel.

INSTALLATION

WARNING: ON VEHICLES EQUIPPED WITH AIRBAGS, DISABLE THE AIRBAG SYSTEM BEFORE ATTEMPTING ANY STEERING WHEEL, STEERING COLUMN, OR INSTRUMENT PANEL COMPONENT DIAGNOSIS OR SERVICE. DISCONNECT AND ISOLATE THE BATTERY NEGATIVE (GROUND) CABLE, THEN WAIT TWO MINUTES FOR THE AIRBAG SYSTEM CAPACITOR TO DISCHARGE BEFORE PERFORMING FURTHER DIAGNOSIS OR SERVICE. THIS IS THE ONLY SURE WAY TO DISABLE THE AIRBAG SYSTEM. FAILURE TO TAKE THE PROPER PRECAUTIONS COULD RESULT IN ACCIDENTAL AIRBAG DEPLOYMENT AND POSSIBLE PERSONAL INJURY.

(1) If the vehicle is not equipped with the optional automatic headlamps light sensor/vehicle theft security system indicator, be certain that the hole plug is installed in the clearance hole located to the outboard side of the driver side defroster outlet in the instrument panel top cover (Fig. 22).

(2) Before installing the top cover onto the top of the instrument panel, be certain that the rubber top cover seal is properly positioned on the forward edge of the top cover panel.

(3) Position the top cover onto the top of the instrument panel.

(4) Align the four snap clips on the top cover with the snap clip receptacles in the instrument panel top pad.

(5) Press firmly downward on the top cover over each of the four snap clip locations until each of the snap clips is fully seated in their receptacles in the instrument panel top pad.

(6) Reconnect the battery negative cable.

INSTRUMENT PANEL TOP PAD

REMOVAL

WARNING: ON VEHICLES EQUIPPED WITH AIRBAGS, DISABLE THE AIRBAG SYSTEM BEFORE ATTEMPTING ANY STEERING WHEEL, STEERING COLUMN, OR INSTRUMENT PANEL COMPONENT DIAGNOSIS OR SERVICE. DISCONNECT AND ISOLATE THE BATTERY NEGATIVE (GROUND) CABLE, THEN WAIT TWO MINUTES FOR THE AIRBAG SYSTEM CAPACITOR TO DISCHARGE BEFORE PERFORMING FURTHER DIAGNOSIS OR SERVICE. THIS IS THE ONLY SURE WAY TO DISABLE THE AIRBAG SYSTEM. FAILURE TO TAKE THE PROPER PRECAUTIONS COULD RESULT IN ACCIDENTAL AIRBAG DEPLOYMENT AND POSSIBLE PERSONAL INJURY.

INSTRUMENT PANEL TOP PAD (Continued)

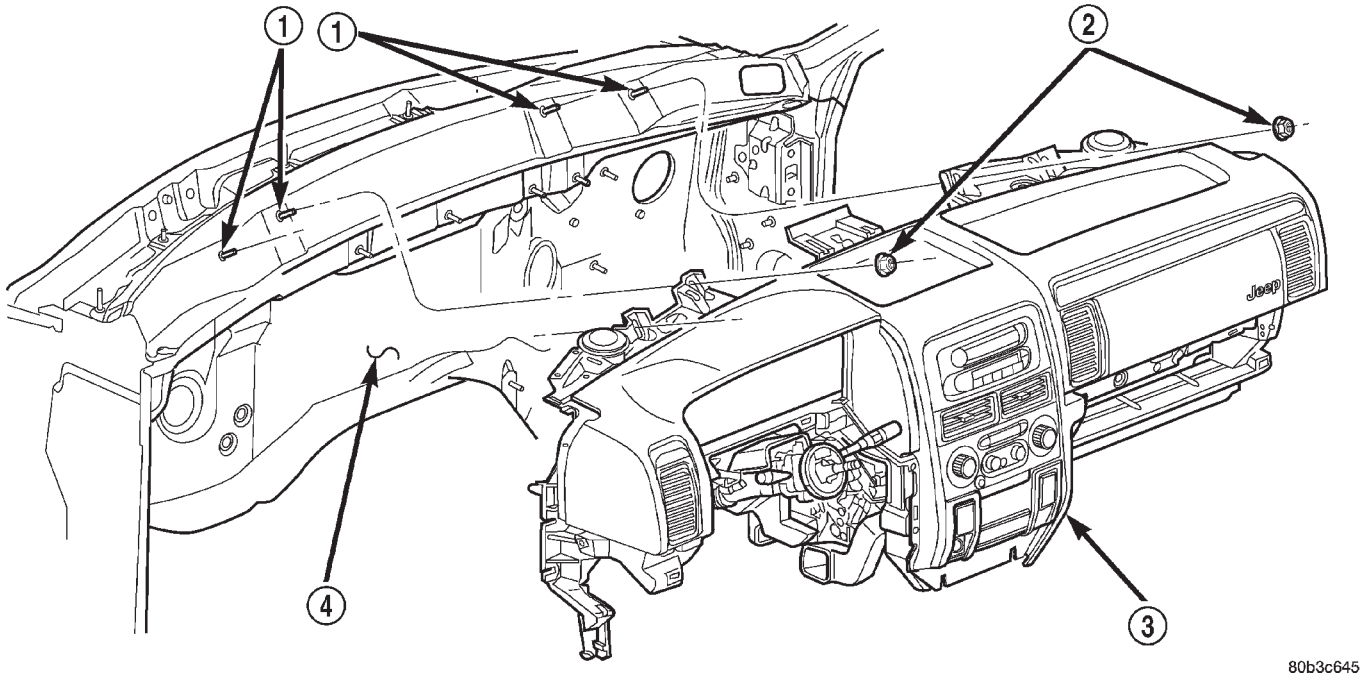

Fig. 23 Instrument Panel Top Pad to Dash Panel Mounting

1 - STUD (4)
2 - NUT (4)
3 - INSTRUMENT PANEL
4 - DASH PANEL

(1) Disconnect and isolate the battery negative cable.

(2) Remove the trim from the right and left A-pillars. (Refer to 23 - BODY/INTERIOR/A-PILLAR TRIM - REMOVAL).

(3) Remove the top cover from the instrument panel. (Refer to 23 - BODY/INSTRUMENT PANEL/INSTRUMENT PANEL TOP COVER - REMOVAL).

(4) Remove the four nuts that secure the instrument panel top pad to the studs on the dash panel near the windshield fence line (Fig. 23).

(5) Remove the speakers from the instrument panel top pad. (Refer to 8 - ELECTRICAL/AUDIO/SPEAKER - REMOVAL - INSTRUMENT PANEL SPEAKER).

(6) Disengage the retainer that secures each of the two instrument panel wire harness speaker take outs to the mounting hole in the instrument panel top pad. Tuck the loose ends of these speaker take outs down the defroster ducts to keep them out of the way during the remainder of this procedure.

(7) If the vehicle is so equipped, remove the two screws that secure the automatic headlamp light sensor/vehicle theft security system indicator unit to the instrument panel top pad just outboard of the driver side defroster outlet. Move the sensor/indicator unit towards the windshield to keep it out of the way during the remainder of this procedure.

(8) Remove the cluster bezel from the instrument panel. (Refer to 23 - BODY/INSTRUMENT PANEL/CLUSTER BEZEL - REMOVAL).

(9) Remove the instrument cluster from the instrument panel. (Refer to 8 - ELECTRICAL/INSTRUMENT CLUSTER - REMOVAL).

(10) Remove the steering column opening cover from the instrument panel. (Refer to 23 - BODY/INSTRUMENT PANEL/STEERING COLUMN OPENING COVER - REMOVAL).

(11) Roll the glove box down from the instrument panel. (Refer to 23 - BODY/INSTRUMENT PANEL/GLOVE BOX - STANDARD PROCEDURE - GLOVE BOX ROLL DOWN).

(12) Remove the end cap from the passenger side lower outboard end of the instrument panel. (Refer to 23 - BODY/INSTRUMENT PANEL/INSTRUMENT PANEL END CAP - REMOVAL).

(13) Remove the lower right center bezel from the instrument panel. (Refer to 23 - BODY/INSTRUMENT PANEL/IP LOWER RIGHT CENTER BEZEL - REMOVAL).

(14) Remove the glove box lamp and switch from the instrument panel. (Refer to 8 - ELECTRICAL/LAMPS/LIGHTING - INTERIOR/GLOVE BOX LAMP/SWITCH - REMOVAL).

(15) Remove the two large screws on the glove box opening upper reinforcement that secure the top pad to the instrument panel structural duct (Fig. 24).

INSTRUMENT PANEL TOP PAD (Continued)

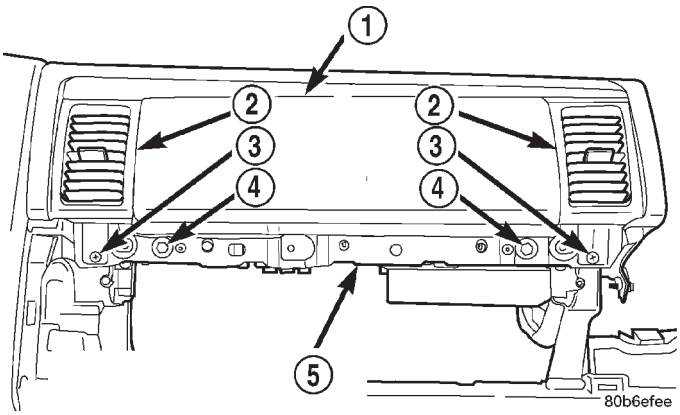

Fig. 24 Instrument Panel Top Pad to Glove Box Opening Mounting

1 - PASSENGER SIDE TRIM BEZEL
2 - PANEL OUTLETS
3 - SMALL SCREWS
4 - LARGE SCREWS
5 - GLOVE BOX OPENING UPPER REINFORCEMENT

(16) Remove the two small screws on the glove box opening upper reinforcement that secure the panel outlets to the instrument panel structural duct.

(17) Remove the center upper bezel from the instrument panel. (Refer to 23 - BODY/INSTRUMENT PANEL/IP CENTER BEZEL - UPPER - REMOVAL).

(18) Remove the center lower bezel from the instrument panel. (Refer to 23 - BODY/INSTRUMENT PANEL/IP CENTER BEZEL - LOWER - REMOVAL).

(19) Remove the four screws that secure the radio to the instrument panel structural duct. Pull the radio out of the instrument panel only far enough to access the screws that secure the top pad to the instrument panel structural duct.

(20) Remove the four screws that secure the heater-A/C control to the instrument panel structural duct. Pull the heater-A/C control out of the instrument panel only far enough to access the screws that secure the top pad to the instrument panel structural duct.

(21) Remove all of the screws that secure the perimeter of the top pad to the instrument panel structural duct.

(22) Remove the front bin from the floor console. (Refer to 23 - BODY/INTERIOR/FLOOR CONSOLE - REMOVAL).

(23) Reach through the front bin opening of the floor console to access and remove the two screws that secure the center floor tunnel bracket to the instrument panel.

(24) Reach through the front bin opening of the floor console to access and loosen the two nuts that secure the center floor tunnel bracket to the studs on the floor panel transmission tunnel.

(25) Slide the center floor tunnel bracket rearward in the vehicle far enough to disengage the locating hole in the lower flange of the top pad from the locating pin on the instrument panel structural duct (Fig. 25).

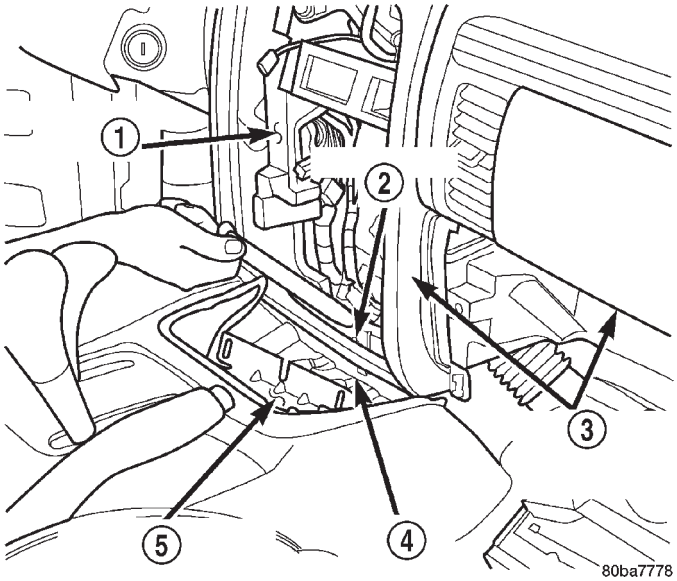

Fig. 25 Instrument Panel Top Pad Remove/Install

1 - STRUCTURAL DUCT
2 - LOCATING PIN
3 - INSTRUMENT PANEL TOP PAD
4 - LOWER FLANGE
5 - CENTER FLOOR TUNNEL BRACKET

(26) Remove the instrument panel top pad from the instrument panel structural duct.

INSTALLATION

WARNING: ON VEHICLES EQUIPPED WITH AIRBAGS, DISABLE THE AIRBAG SYSTEM BEFORE ATTEMPTING ANY STEERING WHEEL, STEERING COLUMN, OR INSTRUMENT PANEL COMPONENT DIAGNOSIS OR SERVICE. DISCONNECT AND ISOLATE THE BATTERY NEGATIVE (GROUND) CABLE, THEN WAIT TWO MINUTES FOR THE AIRBAG SYSTEM CAPACITOR TO DISCHARGE BEFORE PERFORMING FURTHER DIAGNOSIS OR SERVICE. THIS IS THE ONLY SURE WAY TO DISABLE THE AIRBAG SYSTEM. FAILURE TO TAKE THE PROPER PRECAUTIONS COULD RESULT IN ACCIDENTAL AIRBAG DEPLOYMENT AND POSSIBLE PERSONAL INJURY.

If the top pad is being replaced with a new unit, be certain to transfer or install the panel outlets and the passenger side trim bezel to the new unit before it is installed on the instrument panel structural duct. (Refer to 24 - HEATING & AIR CONDITIONING/DISTRIBUTION/AIR OUTLETS - REMOVAL) and (Refer to 23 - BODY/INSTRUMENT PANEL/IP TRIM BEZEL - PASSENGER - REMOVAL).

INSTRUMENT PANEL TOP PAD (Continued)

(1) Position the instrument panel top pad over the instrument panel structural duct and the studs on the dash panel near the windshield fence line.

(2) Route the instrument panel wire harness take out for the glove box lamp and switch unit to the switch mounting hole in the upper glove box opening reinforcement.

(3) Reach through the front bin opening of the floor console to engage the locating hole in the lower flange of the top pad with the locating pin on the instrument panel structural duct (Fig. 25).

(4) Reach through the front bin opening of the floor console to slide the center floor tunnel bracket forward in the vehicle far enough to capture the lower flange of the top pad between the bracket and the structural duct.

(5) Reach through the front bin opening of the floor console to install and tighten the two screws that secure the center floor tunnel bracket to the instrument panel. Tighten the screws to 11.8 N·m (105 in. lbs.).

(6) Reach through the front bin opening of the floor console to access and tighten the two nuts that secure the center floor tunnel bracket to the studs on the floor panel transmission tunnel. Tighten the nuts to 11.8 N·m (105 in. lbs.).

(7) Reinstall the front bin into the floor console. (Refer to 23 - BODY/INTERIOR/FLOOR CONSOLE - INSTALLATION).

(8) Install and tighten all of the screws that secure the perimeter of the top pad to the instrument panel structural duct. Tighten the screws to 2.2 N·m (20 in. lbs.).

(9) Install and tighten the four screws that secure the heater-A/C control to the instrument panel structural duct. Tighten the screws to 2.2 N·m (20 in. lbs.).

(10) Install and tighten the four screws that secure the radio to the instrument panel structural duct. Tighten the screws to 2.2 N·m (20 in. lbs.).

(11) Reinstall the center lower bezel onto the instrument panel. (Refer to 23 - BODY/INSTRUMENT PANEL/IP CENTER BEZEL - LOWER - INSTALLATION).

(12) Reinstall the center upper bezel onto the instrument panel. (Refer to 23 - BODY/INSTRUMENT PANEL/IP CENTER BEZEL - UPPER - INSTALLATION).

(13) Install and tighten the two large screws on the glove box opening upper reinforcement that secure the top pad to the instrument panel structural duct (Fig. 24). Tighten the screws to 11.8 N·m (105 in. lbs.).

(14) Install and tighten the two small screws on the glove box opening upper reinforcement that secure the panel outlets to the instrument panel structural duct. Tighten the screws to 2.2 N·m (20 in. lbs.).

(15) Reinstall the glove box lamp and switch into the instrument panel. (Refer to 8 - ELECTRICAL/LAMPS/LIGHTING - INTERIOR/GLOVE BOX LAMP/SWITCH - INSTALLATION).

(16) Reinstall the lower right center bezel onto the instrument panel. (Refer to 23 - BODY/INSTRUMENT PANEL/IP LOWER RIGHT CENTER BEZEL - INSTALLATION).

(17) Reinstall the end cap onto the instrument panel. (Refer to 23 - BODY/INSTRUMENT PANEL/INSTRUMENT PANEL END CAP - INSTALLATION).

(18) Roll the glove box back up into the instrument panel. (Refer to 23 - BODY/INSTRUMENT PANEL/GLOVE BOX - STANDARD PROCEDURE - GLOVE BOX ROLL DOWN).

(19) Reinstall the steering column opening cover onto the instrument panel. (Refer to 23 - BODY/INSTRUMENT PANEL/STEERING COLUMN OPENING COVER - INSTALLATION).

(20) Reinstall the instrument cluster into the instrument panel. (Refer to 8 - ELECTRICAL/INSTRUMENT CLUSTER - INSTALLATION).

(21) Reinstall the cluster bezel onto the instrument panel. (Refer to 23 - BODY/INSTRUMENT PANEL/CLUSTER BEZEL - INSTALLATION).

(22) If the vehicle is so equipped, position the automatic headlamp light sensor/vehicle theft security system indicator unit to the instrument panel top pad just outboard of the driver side defroster outlet. Install and tighten the two screws that secure the sensor/indicator unit. Tighten the screws to 2.2 N·m (20 in. lbs.).

(23) Engage the retainer that secures each of the two instrument panel wire harness speaker take outs to the mounting hole in the instrument panel top pad.

(24) Reinstall the speakers onto the instrument panel top pad. (Refer to 8 - ELECTRICAL/AUDIO/SPEAKER - INSTALLATION - INSTRUMENT PANEL SPEAKER).

(25) Install and tighten the four nuts that secure the instrument panel top pad to the studs on the dash panel near the windshield fence line (Fig. 23). Tighten the nuts to 11.8 N·m (105 in. lbs.).

(26) Reinstall the top cover onto the instrument panel. (Refer to 23 - BODY/INSTRUMENT PANEL/INSTRUMENT PANEL TOP COVER - INSTALLATION).

(27) Reinstall the trim onto the right and left A-pillars. (Refer to 23 - BODY/INTERIOR/A-PILLAR TRIM - INSTALLATION).

(28) Reconnect the battery negative cable.

INSTRUMENT PANEL C-CHANNEL COVER BRACKET

REMOVAL

WARNING: ON VEHICLES EQUIPPED WITH AIRBAGS, DISABLE THE AIRBAG SYSTEM BEFORE ATTEMPTING ANY STEERING WHEEL, STEERING COLUMN, OR INSTRUMENT PANEL COMPONENT DIAGNOSIS OR SERVICE. DISCONNECT AND ISOLATE THE BATTERY NEGATIVE (GROUND) CABLE, THEN WAIT TWO MINUTES FOR THE AIRBAG SYSTEM CAPACITOR TO DISCHARGE BEFORE PERFORMING FURTHER DIAGNOSIS OR SERVICE. THIS IS THE ONLY SURE WAY TO DISABLE THE AIRBAG SYSTEM. FAILURE TO TAKE THE PROPER PRECAUTIONS COULD RESULT IN ACCIDENTAL AIRBAG DEPLOYMENT AND POSSIBLE PERSONAL INJURY.

(1) Disconnect and isolate the battery negative cable.

(2) Remove the instrument panel from the vehicle. (Refer to 23 - BODY/INSTRUMENT PANEL - REMOVAL).

(3) Place the instrument panel top down on a suitable work surface. Be certain to take the proper precautions to protect the top of the instrument panel from any possible cosmetic damage.

(4) Disengage the radio antenna coaxial cable retainer from the mounting hole in the instrument panel wire harness mounting tab on the passenger side outboard end of the instrument panel C-channel cover bracket.

(5) Remove the screw that secures the instrument panel wire harness mounting tab on the passenger side outboard end of the instrument panel C-channel cover bracket (Fig. 26).

(6) Remove the screw that secures the passenger side courtesy lamp to the lower tab of instrument panel C-channel cover bracket.

(7) Remove the eight screws that secure the C-channel cover bracket to the instrument panel structural duct.

(8) Remove the C-channel cover bracket from the instrument panel structural duct.

INSTALLATION

WARNING: ON VEHICLES EQUIPPED WITH AIRBAGS, DISABLE THE AIRBAG SYSTEM BEFORE ATTEMPTING ANY STEERING WHEEL, STEERING COLUMN, OR INSTRUMENT PANEL COMPONENT DIAGNOSIS OR SERVICE. DISCONNECT AND ISOLATE THE BATTERY NEGATIVE (GROUND) CABLE, THEN WAIT TWO MINUTES FOR THE AIRBAG SYSTEM CAPACITOR TO DISCHARGE BEFORE PERFORMING FURTHER DIAGNOSIS OR SERVICE. THIS IS THE ONLY SURE WAY TO DISABLE THE AIRBAG SYSTEM. FAILURE TO TAKE THE PROPER PRECAUTIONS COULD RESULT IN ACCIDENTAL AIRBAG DEPLOYMENT AND POSSIBLE PERSONAL INJURY.

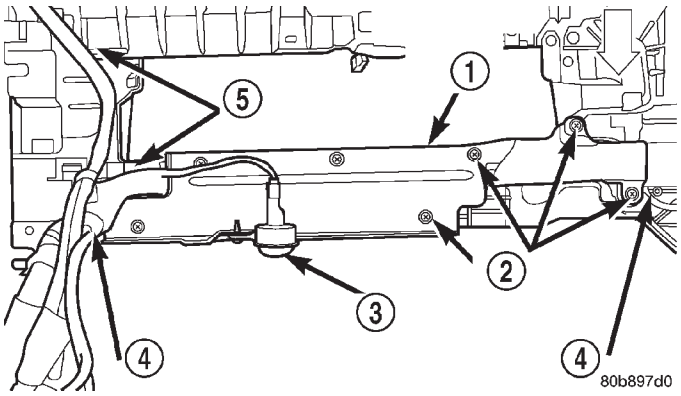

Fig. 26 Instrument Panel C-Channel Cover Bracket Remove/Install

1 - C-CHANNEL COVER BRACKET
2 - SCREWS (8)
3 - PASSENGER SIDE COURTESY LAMP
4 - INSTRUMENT PANEL WIRE HARNESS
5 - STRUCTURAL DUCT

(1) Position the C-channel cover bracket to the instrument panel structural duct.

(2) Install and tighten the eight screws that secure the C-channel cover bracket to the instrument panel structural duct (Fig. 26). Tighten the screws to 2.2 N·m (20 in. lbs.).

(3) Position the passenger side courtesy lamp to the lower tab of instrument panel C-channel cover bracket.

(4) Install and tighten the screw that secures the passenger side courtesy lamp to the lower tab of instrument panel C-channel cover bracket. Tighten the screw to 2.2 N·m (20 in. lbs.).

(5) Position the instrument panel wire harness mounting tab to the passenger side outboard end of the instrument panel C-channel cover bracket.

(6) Install and tighten the screw that secures the instrument panel wire harness mounting tab to the passenger side outboard end of the instrument panel C-channel cover bracket. Tighten the screw to 2.2 N·m (20 in. lbs.).

(7) Engage the radio antenna coaxial cable retainer in the mounting hole in the instrument panel wire harness mounting tab on the passenger side outboard end of the instrument panel C-channel cover bracket.

INSTRUMENT PANEL C-CHANNEL COVER BRACKET (Continued)

(8) Reinstall the instrument panel into the vehicle. (Refer to 23 - BODY/INSTRUMENT PANEL - INSTALLATION).

(9) Reconnect the battery negative cable.

INSTRUMENT PANEL CENTER BEZEL - LOWER

REMOVAL

WARNING: ON VEHICLES EQUIPPED WITH AIRBAGS, DISABLE THE AIRBAG SYSTEM BEFORE ATTEMPTING ANY STEERING WHEEL, STEERING COLUMN, OR INSTRUMENT PANEL COMPONENT DIAGNOSIS OR SERVICE. DISCONNECT AND ISOLATE THE BATTERY NEGATIVE (GROUND) CABLE, THEN WAIT TWO MINUTES FOR THE AIRBAG SYSTEM CAPACITOR TO DISCHARGE BEFORE PERFORMING FURTHER DIAGNOSIS OR SERVICE. THIS IS THE ONLY SURE WAY TO DISABLE THE AIRBAG SYSTEM. FAILURE TO TAKE THE PROPER PRECAUTIONS COULD RESULT IN ACCIDENTAL AIRBAG DEPLOYMENT AND POSSIBLE PERSONAL INJURY.

(1) Disconnect and isolate the battery negative cable.

(2) Using a trim stick or another suitable wide flat-bladed tool, gently pry each of the four corners of the center lower bezel away from the instrument panel far enough to disengage the four snap clips from their receptacles (Fig. 27).

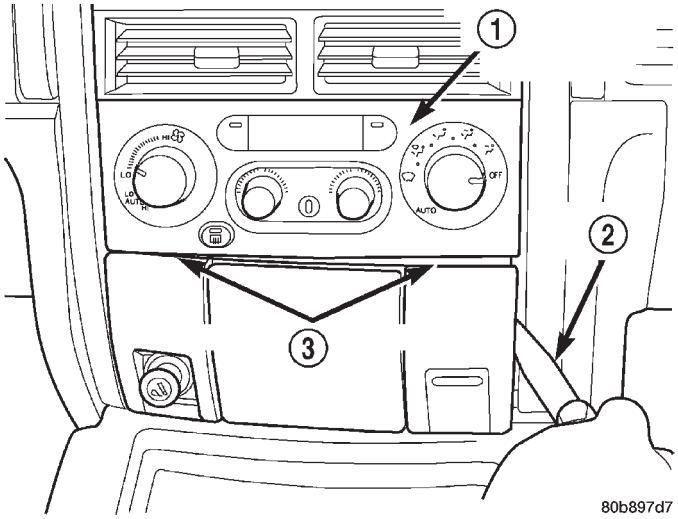

Fig. 27 Instrument Panel Center Lower Bezel Remove/Install

1 - HEATER AND AIR CONDITIONER CONTROLS
2 - TRIM STICK
3 - CENTER LOWER BEZEL

(3) Pull the center lower bezel away from the instrument panel far enough to access the instrument panel wire harness connectors.

(4) Squeeze the mounting legs of the ash receiver lamp hood and remove it from the rectangular hole in the ash receiver flame shield.

(5) If the vehicle is so equipped, disconnect the instrument panel wire harness connectors for the two heated seat switches from the switch connector receptacles.

(6) Disconnect the instrument panel wire harness connectors for the cigar lighter and accessory power outlet from the lighter and outlet connector receptacles.

(7) Remove the center lower bezel from the instrument panel.

INSTALLATION

WARNING: ON VEHICLES EQUIPPED WITH AIRBAGS, DISABLE THE AIRBAG SYSTEM BEFORE ATTEMPTING ANY STEERING WHEEL, STEERING COLUMN, OR INSTRUMENT PANEL COMPONENT DIAGNOSIS OR SERVICE. DISCONNECT AND ISOLATE THE BATTERY NEGATIVE (GROUND) CABLE, THEN WAIT TWO MINUTES FOR THE AIRBAG SYSTEM CAPACITOR TO DISCHARGE BEFORE PERFORMING FURTHER DIAGNOSIS OR SERVICE. THIS IS THE ONLY SURE WAY TO DISABLE THE AIRBAG SYSTEM. FAILURE TO TAKE THE PROPER PRECAUTIONS COULD RESULT IN ACCIDENTAL AIRBAG DEPLOYMENT AND POSSIBLE PERSONAL INJURY.

(1) Position the center lower bezel to the instrument panel.

(2) Reconnect the instrument panel wire harness connectors for the cigar lighter and the accessory power outlet to the lighter and outlet connector receptacles.

(3) If the vehicle is so equipped, reconnect the instrument panel wire harness connectors for the two heated seat switches to the switch connector receptacles.

(4) Squeeze the mounting legs of the ash receiver lamp hood and install them into the rectangular hole in the ash receiver flame shield.

(5) Align the two lower snap clips on the center lower bezel with their receptacles in the instrument panel top pad.

(6) Using hand pressure, press firmly and evenly on the center lower bezel over each of the lower snap clip locations until each of the snap clips is fully engaged in its receptacle.

(7) Align the two upper snap clips on the center lower bezel with their receptacles in the instrument panel top pad.

INSTRUMENT PANEL CENTER BEZEL - LOWER (Continued)

(8) Using hand pressure, press firmly and evenly on the center lower bezel over each of the upper snap clip locations until each of the snap clips is fully engaged in its receptacle.

(9) Reconnect the battery negative cable.

INSTRUMENT PANEL CENTER BEZEL - UPPER

REMOVAL

WARNING: ON VEHICLES EQUIPPED WITH AIRBAGS, DISABLE THE AIRBAG SYSTEM BEFORE ATTEMPTING ANY STEERING WHEEL, STEERING COLUMN, OR INSTRUMENT PANEL COMPONENT DIAGNOSIS OR SERVICE. DISCONNECT AND ISOLATE THE BATTERY NEGATIVE (GROUND) CABLE, THEN WAIT TWO MINUTES FOR THE AIRBAG SYSTEM CAPACITOR TO DISCHARGE BEFORE PERFORMING FURTHER DIAGNOSIS OR SERVICE. THIS IS THE ONLY SURE WAY TO DISABLE THE AIRBAG SYSTEM. FAILURE TO TAKE THE PROPER PRECAUTIONS COULD RESULT IN ACCIDENTAL AIRBAG DEPLOYMENT AND POSSIBLE PERSONAL INJURY.

(1) Disconnect and isolate the battery negative cable.

(2) Using a trim stick or another suitable wide flat-bladed tool, gently pry each of the four corners of the center upper bezel away from the instrument panel far enough to disengage the four snap clips from their receptacles (Fig. 28).

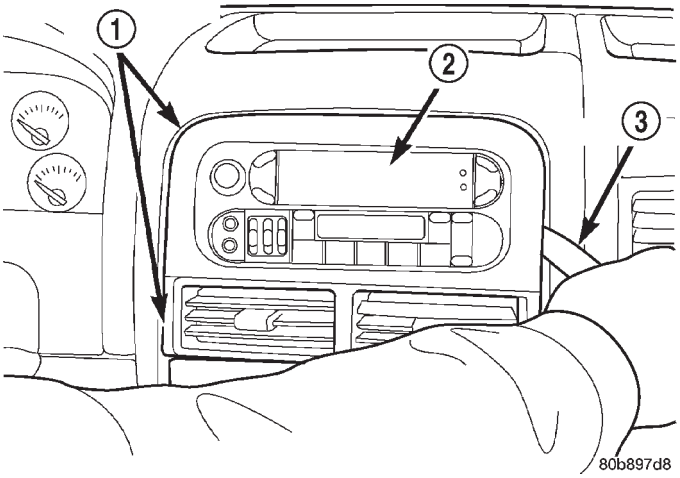

Fig. 28 Instrument Panel Center Upper Bezel Remove/Install

1 - CENTER UPPER BEZEL
2 - RADIO
3 - TRIM STICK

(3) Remove the center upper bezel from the instrument panel.

INSTALLATION

WARNING: ON VEHICLES EQUIPPED WITH AIRBAGS, DISABLE THE AIRBAG SYSTEM BEFORE ATTEMPTING ANY STEERING WHEEL, STEERING COLUMN, OR INSTRUMENT PANEL COMPONENT DIAGNOSIS OR SERVICE. DISCONNECT AND ISOLATE THE BATTERY NEGATIVE (GROUND) CABLE, THEN WAIT TWO MINUTES FOR THE AIRBAG SYSTEM CAPACITOR TO DISCHARGE BEFORE PERFORMING FURTHER DIAGNOSIS OR SERVICE. THIS IS THE ONLY SURE WAY TO DISABLE THE AIRBAG SYSTEM. FAILURE TO TAKE THE PROPER PRECAUTIONS COULD RESULT IN ACCIDENTAL AIRBAG DEPLOYMENT AND POSSIBLE PERSONAL INJURY.

(1) Position the center upper bezel onto the instrument panel.

(2) Align the four snap clips on the center upper bezel with their receptacles in the instrument panel top pad.

(3) Using hand pressure, press firmly and evenly on the center upper bezel over each of the snap clip locations until each of the snap clips is fully engaged in its receptacle.

(4) Reconnect the battery negative cable.

INSTRUMENT PANEL CENTER FLOOR TUNNEL BRACKET

REMOVAL

WARNING: ON VEHICLES EQUIPPED WITH AIRBAGS, DISABLE THE AIRBAG SYSTEM BEFORE ATTEMPTING ANY STEERING WHEEL, STEERING COLUMN, OR INSTRUMENT PANEL COMPONENT DIAGNOSIS OR SERVICE. DISCONNECT AND ISOLATE THE BATTERY NEGATIVE (GROUND) CABLE, THEN WAIT TWO MINUTES FOR THE AIRBAG SYSTEM CAPACITOR TO DISCHARGE BEFORE PERFORMING FURTHER DIAGNOSIS OR SERVICE. THIS IS THE ONLY SURE WAY TO DISABLE THE AIRBAG SYSTEM. FAILURE TO TAKE THE PROPER PRECAUTIONS COULD RESULT IN ACCIDENTAL AIRBAG DEPLOYMENT AND POSSIBLE PERSONAL INJURY.

(1) Disconnect and isolate the battery negative cable.

(2) Remove the front bin from the floor console. (Refer to 23 - BODY/INTERIOR/FLOOR CONSOLE - REMOVAL).

(3) Reach through the front bin opening of the floor console to access and disengage the instrument

INSTRUMENT PANEL CENTER FLOOR TUNNEL BRACKET (Continued)

panel wire harness retainer from the mounting hole on the driver side of the instrument panel center floor tunnel bracket.

(4) Remove the two screws that secure the center floor tunnel bracket to the instrument panel (Fig. 29).

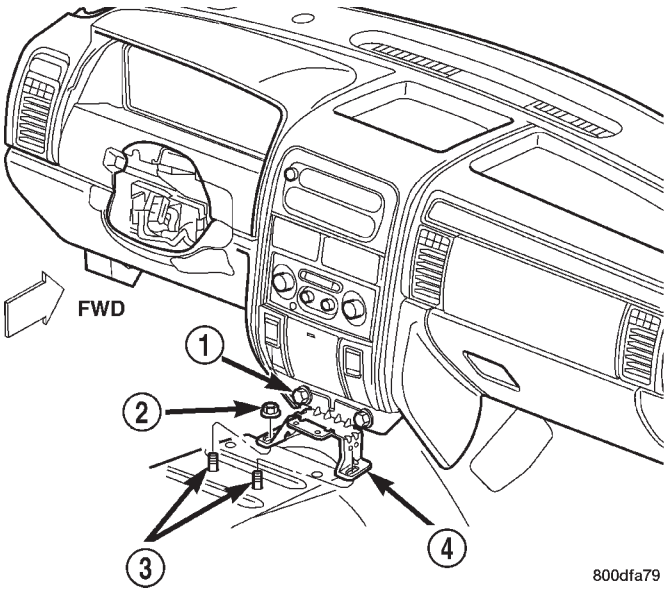

Fig. 29 Instrument Panel Center Floor Tunnel Bracket Remove/Install

1 - SCREW (2)
2 - NUT (2)
3 - STUDS
4 - CENTER FLOOR TUNNEL BRACKET

(5) Remove the two nuts that secure the center floor tunnel bracket to the studs on the floor panel transmission tunnel.

(6) Remove the center floor tunnel bracket from the instrument panel and the floor panel transmission tunnel.

INSTALLATION

WARNING: ON VEHICLES EQUIPPED WITH AIRBAGS, DISABLE THE AIRBAG SYSTEM BEFORE ATTEMPTING ANY STEERING WHEEL, STEERING COLUMN, OR INSTRUMENT PANEL COMPONENT DIAGNOSIS OR SERVICE. DISCONNECT AND ISOLATE THE BATTERY NEGATIVE (GROUND) CABLE, THEN WAIT TWO MINUTES FOR THE AIRBAG SYSTEM CAPACITOR TO DISCHARGE BEFORE PERFORMING FURTHER DIAGNOSIS OR SERVICE. THIS IS THE ONLY SURE WAY TO DISABLE THE AIRBAG SYSTEM. FAILURE TO TAKE THE PROPER PRECAUTIONS COULD RESULT IN ACCIDENTAL AIRBAG DEPLOYMENT AND POSSIBLE PERSONAL INJURY.

(1) Position the center floor tunnel bracket over the floor panel transmission tunnel studs and slide it up against the instrument panel (Fig. 29).

(2) Install and tighten the two nuts that secure the center floor tunnel bracket to the studs on the floor panel transmission tunnel. Tighten the nuts to 11.3 N·m (100 in. lbs.).

(3) Install and tighten the two screws that secure the center floor tunnel bracket to the instrument panel. Tighten the screws to 11.3 N·m (100 in. lbs.).

(4) Reach through the front bin opening of the floor console to access and engage the instrument panel wire harness retainer with the mounting hole on the driver side of the instrument panel center floor tunnel bracket.

(5) Reinstall the front bin into the floor console. (Refer to 23 - BODY/INTERIOR/FLOOR CONSOLE - INSTALLATION).

(6) Reconnect the battery negative cable.

INSTRUMENT PANEL COURTESY LAMP BRACKET

REMOVAL

WARNING: ON VEHICLES EQUIPPED WITH AIRBAGS, DISABLE THE AIRBAG SYSTEM BEFORE ATTEMPTING ANY STEERING WHEEL, STEERING COLUMN, OR INSTRUMENT PANEL COMPONENT DIAGNOSIS OR SERVICE. DISCONNECT AND ISOLATE THE BATTERY NEGATIVE (GROUND) CABLE, THEN WAIT TWO MINUTES FOR THE AIRBAG SYSTEM CAPACITOR TO DISCHARGE BEFORE PERFORMING FURTHER DIAGNOSIS OR SERVICE. THIS IS THE ONLY SURE WAY TO DISABLE THE AIRBAG SYSTEM. FAILURE TO TAKE THE PROPER PRECAUTIONS COULD RESULT IN ACCIDENTAL AIRBAG DEPLOYMENT AND POSSIBLE PERSONAL INJURY.

(1) Disconnect and isolate the battery negative cable.

(2) Remove the instrument panel fuse cover from the bottom of the Junction Block (JB) and Body Control Module (BCM) unit. (Refer to 8 - ELECTRICAL/POWER DISTRIBUTION/FUSE COVER - REMOVAL).

(3) Reach under the steering column opening cover to access and remove the screw that secures the courtesy lamp unit to the lower end of the instrument panel courtesy lamp bracket near the inboard side of the JB (Fig. 30).

(4) Remove the courtesy lamp from the lower end of the courtesy lamp bracket.

INSTRUMENT PANEL COURTESY LAMP BRACKET (Continued)

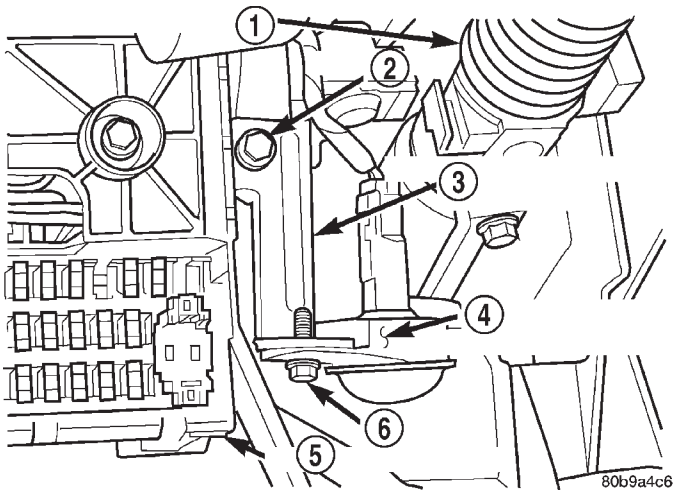

Fig. 30 Instrument Panel Courtesy Lamp Bracket Remove/Install

1 - STEERING COLUMN
2 - SCREW
3 - COURTESY LAMP BRACKET
4 - DRIVER SIDE COURTESY LAMP
5 - JUNCTION BLOCK
6 - SCREW

(5) Reach under the steering column opening cover to access and remove the screw that secures the courtesy lamp bracket and the inboard side of the JB to the instrument panel steering column support bracket.

(6) Remove the courtesy lamp bracket from the inboard side of the JB and the instrument panel steering column support bracket.

INSTALLATION

WARNING: ON VEHICLES EQUIPPED WITH AIRBAGS, DISABLE THE AIRBAG SYSTEM BEFORE ATTEMPTING ANY STEERING WHEEL, STEERING COLUMN, OR INSTRUMENT PANEL COMPONENT DIAGNOSIS OR SERVICE. DISCONNECT AND ISOLATE THE BATTERY NEGATIVE (GROUND) CABLE, THEN WAIT TWO MINUTES FOR THE AIRBAG SYSTEM CAPACITOR TO DISCHARGE BEFORE PERFORMING FURTHER DIAGNOSIS OR SERVICE. THIS IS THE ONLY SURE WAY TO DISABLE THE AIRBAG SYSTEM. FAILURE TO TAKE THE PROPER PRECAUTIONS COULD RESULT IN ACCIDENTAL AIRBAG DEPLOYMENT AND POSSIBLE PERSONAL INJURY.

(1) Reach under the instrument panel to position the upper end of the courtesy lamp bracket to the inboard side of the Junction Block (JB) and the instrument panel steering column support bracket (Fig. 30).

(2) Install and tighten the screw that secures the courtesy lamp bracket and the inboard side of the JB to the instrument panel steering column support bracket. Tighten the screw to 2.2 N·m (20 in. lbs.).

(3) Position the courtesy lamp to the lower end of the courtesy lamp bracket.

(4) Install and tighten the screw that secures the courtesy lamp to the lower end of the courtesy lamp bracket. Tighten the screw to 2.2 N·m (20 in. lbs.).

(5) Reinstall the instrument panel fuse cover to the bottom of the JB and Body Control Module (BCM) unit. (Refer to 8 - ELECTRICAL/POWER DISTRIBUTION/FUSE COVER - INSTALLATION).

(6) Reconnect the battery negative cable.

INSTRUMENT PANEL INTERMEDIATE BRACKET

REMOVAL

WARNING: ON VEHICLES EQUIPPED WITH AIRBAGS, DISABLE THE AIRBAG SYSTEM BEFORE ATTEMPTING ANY STEERING WHEEL, STEERING COLUMN, OR INSTRUMENT PANEL COMPONENT DIAGNOSIS OR SERVICE. DISCONNECT AND ISOLATE THE BATTERY NEGATIVE (GROUND) CABLE, THEN WAIT TWO MINUTES FOR THE AIRBAG SYSTEM CAPACITOR TO DISCHARGE BEFORE PERFORMING FURTHER DIAGNOSIS OR SERVICE. THIS IS THE ONLY SURE WAY TO DISABLE THE AIRBAG SYSTEM. FAILURE TO TAKE THE PROPER PRECAUTIONS COULD RESULT IN ACCIDENTAL AIRBAG DEPLOYMENT AND POSSIBLE PERSONAL INJURY.

(1) Disconnect and isolate the battery negative cable.

(2) Remove the accelerator pedal assembly from the shoulder studs on the dash panel. (Refer to 14 - FUEL SYSTEM/FUEL INJECTION/ACCELERATOR PEDAL - REMOVAL).

(3) Remove the instrument panel from the vehicle. (Refer to 23 - BODY/INSTRUMENT PANEL - REMOVAL).

(4) Remove the one nut that secures the instrument panel intermediate bracket to the stud on the dash panel (Fig. 31).

(5) Remove the instrument panel intermediate bracket from the two shoulder studs and the one stud on the dash panel.

INSTRUMENT PANEL INTERMEDIATE BRACKET (Continued)

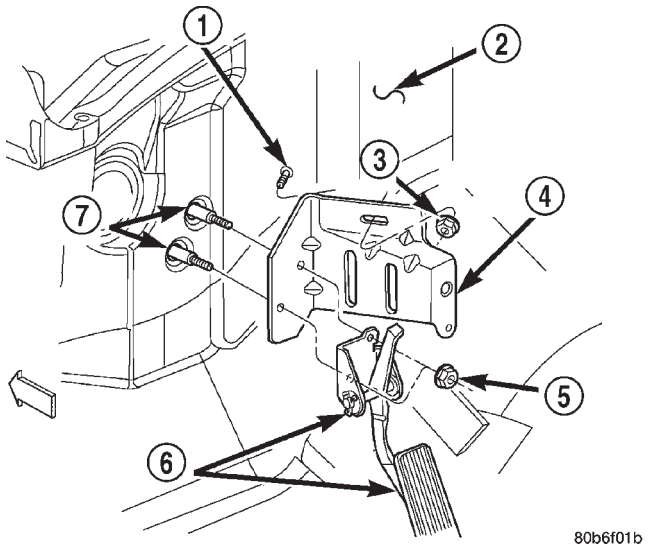

Fig. 31 Instrument Panel Intermediate Bracket Remove/Install

1 - STUD
2 - DASH PANEL
3 - NUT (2)
4 - INTERMEDIATE BRACKET
5 - NUT (2)
6 - ACCELERATOR PEDAL
7 - SHOULDER STUDS

INSTALLATION

WARNING: ON VEHICLES EQUIPPED WITH AIRBAGS, DISABLE THE AIRBAG SYSTEM BEFORE ATTEMPTING ANY STEERING WHEEL, STEERING COLUMN, OR INSTRUMENT PANEL COMPONENT DIAGNOSIS OR SERVICE. DISCONNECT AND ISOLATE THE BATTERY NEGATIVE (GROUND) CABLE, THEN WAIT TWO MINUTES FOR THE AIRBAG SYSTEM CAPACITOR TO DISCHARGE BEFORE PERFORMING FURTHER DIAGNOSIS OR SERVICE. THIS IS THE ONLY SURE WAY TO DISABLE THE AIRBAG SYSTEM. FAILURE TO TAKE THE PROPER PRECAUTIONS COULD RESULT IN ACCIDENTAL AIRBAG DEPLOYMENT AND POSSIBLE PERSONAL INJURY.

(1) Position the instrument panel intermediate bracket to the two shoulder studs and the one stud on the dash panel (Fig. 31).

(2) Loosely install the one nut that secures the intermediate bracket to the one stud on the dash panel.

(3) Reinstall the instrument panel into the vehicle. (Refer to 23 - BODY/INSTRUMENT PANEL - INSTALLATION).

(4) Reinstall the accelerator pedal assembly onto the shoulder studs on the dash panel. (Refer to 14 - FUEL SYSTEM/FUEL INJECTION/ACCELERATOR PEDAL - INSTALLATION).

(5) Reconnect the battery negative cable.

INSTRUMENT PANEL LOWER RIGHT CENTER BEZEL

REMOVAL

WARNING: ON VEHICLES EQUIPPED WITH AIRBAGS, DISABLE THE AIRBAG SYSTEM BEFORE ATTEMPTING ANY STEERING WHEEL, STEERING COLUMN, OR INSTRUMENT PANEL COMPONENT DIAGNOSIS OR SERVICE. DISCONNECT AND ISOLATE THE BATTERY NEGATIVE (GROUND) CABLE, THEN WAIT TWO MINUTES FOR THE AIRBAG SYSTEM CAPACITOR TO DISCHARGE BEFORE PERFORMING FURTHER DIAGNOSIS OR SERVICE. THIS IS THE ONLY SURE WAY TO DISABLE THE AIRBAG SYSTEM. FAILURE TO TAKE THE PROPER PRECAUTIONS COULD RESULT IN ACCIDENTAL AIRBAG DEPLOYMENT AND POSSIBLE PERSONAL INJURY.

(1) Disconnect and isolate the battery negative cable.

(2) Unlatch and open the glove box.

(3) Remove the three screws that secure the lower right center bezel to the instrument panel glove box opening (Fig. 32).

(4) Pull the lower right center bezel straight back from the instrument panel to disengage the two snap clips that secure it to the receptacles in the instrument panel top pad.

(5) Remove the lower right center bezel from the instrument panel.

INSTALLATION

WARNING: ON VEHICLES EQUIPPED WITH AIRBAGS, DISABLE THE AIRBAG SYSTEM BEFORE ATTEMPTING ANY STEERING WHEEL, STEERING COLUMN, OR INSTRUMENT PANEL COMPONENT DIAGNOSIS OR SERVICE. DISCONNECT AND ISOLATE THE BATTERY NEGATIVE (GROUND) CABLE, THEN WAIT TWO MINUTES FOR THE AIRBAG SYSTEM CAPACITOR TO DISCHARGE BEFORE PERFORMING FURTHER DIAGNOSIS OR SERVICE. THIS IS THE ONLY SURE WAY TO DISABLE THE AIRBAG SYSTEM. FAILURE TO TAKE THE PROPER PRECAUTIONS COULD RESULT IN ACCIDENTAL AIRBAG DEPLOYMENT AND POSSIBLE PERSONAL INJURY.

INSTRUMENT PANEL LOWER RIGHT CENTER BEZEL (Continued)

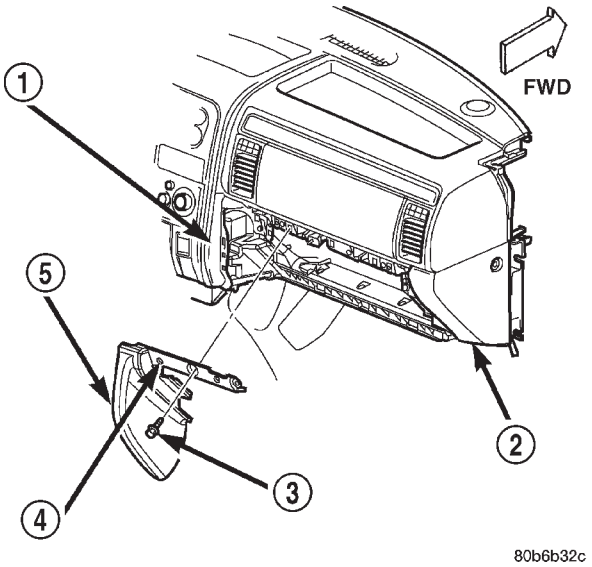

Fig. 32 Instrument Panel Lower Right Center Bezel Remove/Install

1 - INSTRUMENT PANEL TOP PAD
2 - END CAP
3 - SCREWS (3)
4 - BUMPER
5 - LOWER RIGHT CENTER BEZEL

(1) Be certain that the glove box catch bumper is installed in the mounting hole nearest the inboard end of the lower right center bezel extension over the instrument panel upper glove box opening reinforcement.

(2) Position the lower right center bezel to the instrument panel. Be certain that the end of the lower right center bezel extension near the center of the upper glove box opening reinforcement is positioned on top of the end of the extension from the end cap (Fig. 32).

(3) Align the snap clips on the lower right center bezel with the receptacles in the instrument panel top pad.

(4) Using hand pressure, press firmly on the lower right center bezel over each of the snap clip locations until the snap clips are fully engaged in their receptacles.

(5) Install and tighten the three screws that secure the lower right center bezel to the instrument panel glove box opening. Tighten the screws to 2.2 N·m (20 in. lbs.).

(6) Close and latch the glove box.

(7) Reconnect the battery negative cable.

INSTRUMENT PANEL PLENUM BRACKET

REMOVAL

WARNING: ON VEHICLES EQUIPPED WITH AIRBAGS, DISABLE THE AIRBAG SYSTEM BEFORE ATTEMPTING ANY STEERING WHEEL, STEERING COLUMN, OR INSTRUMENT PANEL COMPONENT DIAGNOSIS OR SERVICE. DISCONNECT AND ISOLATE THE BATTERY NEGATIVE (GROUND) CABLE, THEN WAIT TWO MINUTES FOR THE AIRBAG SYSTEM CAPACITOR TO DISCHARGE BEFORE PERFORMING FURTHER DIAGNOSIS OR SERVICE. THIS IS THE ONLY SURE WAY TO DISABLE THE AIRBAG SYSTEM. FAILURE TO TAKE THE PROPER PRECAUTIONS COULD RESULT IN ACCIDENTAL AIRBAG DEPLOYMENT AND POSSIBLE PERSONAL INJURY.

(1) Disconnect and isolate the battery negative cable.

(2) Remove the instrument panel from the vehicle. (Refer to 23 - BODY/INSTRUMENT PANEL - REMOVAL).

(3) Place the instrument panel top down on a suitable work surface. Be certain to take the proper precautions to protect the top of the instrument panel from any possible cosmetic damage.

(4) Remove the one screw that secures the plenum bracket to the instrument panel steering column support bracket (Fig. 33).

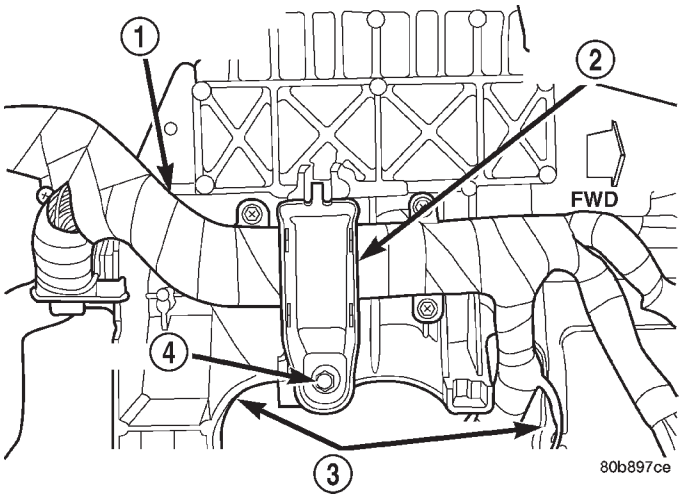

Fig. 33 Instrument Panel Plenum Bracket Remove/Install

1 - INSTRUMENT PANEL WIRE HARNESS
2 - PLENUM BRACKET
3 - STEERING COLUMN SUPPORT BRACKET
4 - SCREW

INSTRUMENT PANEL PLENUM BRACKET (Continued)

(5) Remove the plenum bracket from the instrument panel steering column support bracket.

INSTALLATION

WARNING: ON VEHICLES EQUIPPED WITH AIRBAGS, DISABLE THE AIRBAG SYSTEM BEFORE ATTEMPTING ANY STEERING WHEEL, STEERING COLUMN, OR INSTRUMENT PANEL COMPONENT DIAGNOSIS OR SERVICE. DISCONNECT AND ISOLATE THE BATTERY NEGATIVE (GROUND) CABLE, THEN WAIT TWO MINUTES FOR THE AIRBAG SYSTEM CAPACITOR TO DISCHARGE BEFORE PERFORMING FURTHER DIAGNOSIS OR SERVICE. THIS IS THE ONLY SURE WAY TO DISABLE THE AIRBAG SYSTEM. FAILURE TO TAKE THE PROPER PRECAUTIONS COULD RESULT IN ACCIDENTAL AIRBAG DEPLOYMENT AND POSSIBLE PERSONAL INJURY.

(1) Position the plenum bracket to the instrument panel steering column support bracket (Fig. 33).

(2) Install and tighten the one screw that secures the plenum bracket to the instrument panel steering column support bracket. Tighten the screw to 11.8 N·m (105 in. lbs.).

(3) Reinstall the instrument panel into the vehicle. (Refer to 23 - BODY/INSTRUMENT PANEL - INSTALLATION).

(4) Reconnect the battery negative cable.

INSTRUMENT PANEL STEERING COLUMN BRACKET

REMOVAL

WARNING: ON VEHICLES EQUIPPED WITH AIRBAGS, DISABLE THE AIRBAG SYSTEM BEFORE ATTEMPTING ANY STEERING WHEEL, STEERING COLUMN, OR INSTRUMENT PANEL COMPONENT DIAGNOSIS OR SERVICE. DISCONNECT AND ISOLATE THE BATTERY NEGATIVE (GROUND) CABLE, THEN WAIT TWO MINUTES FOR THE AIRBAG SYSTEM CAPACITOR TO DISCHARGE BEFORE PERFORMING FURTHER DIAGNOSIS OR SERVICE. THIS IS THE ONLY SURE WAY TO DISABLE THE AIRBAG SYSTEM. FAILURE TO TAKE THE PROPER PRECAUTIONS COULD RESULT IN ACCIDENTAL AIRBAG DEPLOYMENT AND POSSIBLE PERSONAL INJURY.

(1) Disconnect and isolate the battery negative cable.

(2) Remove the steering column opening cover from the instrument panel. (Refer to 23 - BODY/INSTRUMENT PANEL/STEERING COLUMN OPENING COVER - REMOVAL).

(3) Remove the four screws that secure the steering column bracket to the instrument panel steering column support bracket (Fig. 34).

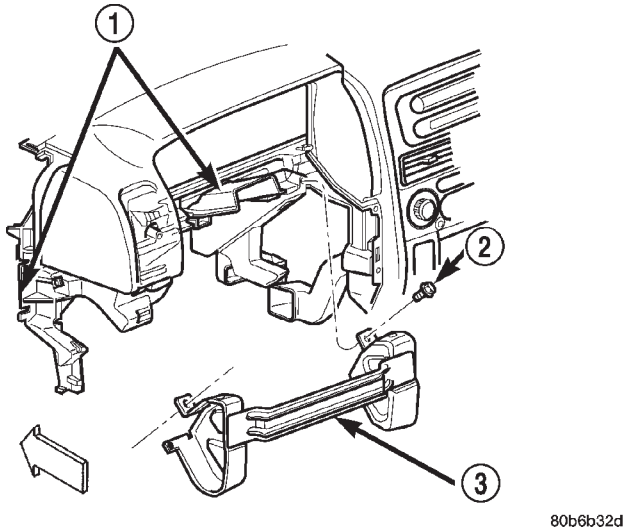

Fig. 34 Instrument Panel Steering Column Bracket Remove/Install

1 - INSTRUMENT PANEL STEERING COLUMN SUPPORT BRACKET
2 - SCREW (4)
3 - INSTRUMENT PANEL STEERING COLUMN BRACKET

(4) Remove the steering column bracket from the instrument panel steering column support bracket.

INSTALLATION

WARNING: ON VEHICLES EQUIPPED WITH AIRBAGS, DISABLE THE AIRBAG SYSTEM BEFORE ATTEMPTING ANY STEERING WHEEL, STEERING COLUMN, OR INSTRUMENT PANEL COMPONENT DIAGNOSIS OR SERVICE. DISCONNECT AND ISOLATE THE BATTERY NEGATIVE (GROUND) CABLE, THEN WAIT TWO MINUTES FOR THE AIRBAG SYSTEM CAPACITOR TO DISCHARGE BEFORE PERFORMING FURTHER DIAGNOSIS OR SERVICE. THIS IS THE ONLY SURE WAY TO DISABLE THE AIRBAG SYSTEM. FAILURE TO TAKE THE PROPER PRECAUTIONS COULD RESULT IN ACCIDENTAL AIRBAG DEPLOYMENT AND POSSIBLE PERSONAL INJURY.

(1) Position the steering column bracket to the instrument panel steering column support bracket (Fig. 34).

(2) Install and tighten the four screws that secure the steering column bracket to the instrument panel steering column support bracket. Tighten the screws to 11.8 N·m (105 in. lbs.).

INSTRUMENT PANEL STEERING COLUMN BRACKET (Continued)

(3) Reinstall the steering column opening cover. (Refer to 23 - BODY/INSTRUMENT PANEL/STEERING COLUMN OPENING COVER - INSTALLATION).

(4) Reconnect the battery negative cable.

INSTRUMENT PANEL STEERING COLUMN SUPPORT BRACKET

REMOVAL

WARNING: ON VEHICLES EQUIPPED WITH AIRBAGS, DISABLE THE AIRBAG SYSTEM BEFORE ATTEMPTING ANY STEERING WHEEL, STEERING COLUMN, OR INSTRUMENT PANEL COMPONENT DIAGNOSIS OR SERVICE. DISCONNECT AND ISOLATE THE BATTERY NEGATIVE (GROUND) CABLE, THEN WAIT TWO MINUTES FOR THE AIRBAG SYSTEM CAPACITOR TO DISCHARGE BEFORE PERFORMING FURTHER DIAGNOSIS OR SERVICE. THIS IS THE ONLY SURE WAY TO DISABLE THE AIRBAG SYSTEM. FAILURE TO TAKE THE PROPER PRECAUTIONS COULD RESULT IN ACCIDENTAL AIRBAG DEPLOYMENT AND POSSIBLE PERSONAL INJURY.

(1) Disconnect and isolate the battery negative cable.

(2) Remove the instrument cluster from the instrument panel. (Refer to 8 - ELECTRICAL/INSTRUMENT CLUSTER - REMOVAL).

(3) Remove the instrument panel plenum bracket from the steering column support bracket. (Refer to 23 - BODY/INSTRUMENT PANEL/IP PLENUM BRACKET - REMOVAL).

(4) Remove the three screws that secure the instrument panel wire harness mounting tabs to the back of the steering column support bracket.

(5) Remove the two screws that secure the 16-way data link connector to the instrument panel steering column support bracket and remove the connector from the bracket (Fig. 35).

(6) Remove the Junction Block (JB) and Body Control Module (BCM) unit from the instrument panel steering column support bracket, but do not disconnect any of the instrument panel wire harness connectors from the unit. (Refer to 8 - ELECTRICAL/POWER DISTRIBUTION/JUNCTION BLOCK - REMOVAL).

(7) From the face of the instrument panel, remove the five screws that secure the steering column support bracket to the instrument panel structural duct.

(8) Remove the steering column support bracket from the instrument panel structural duct.

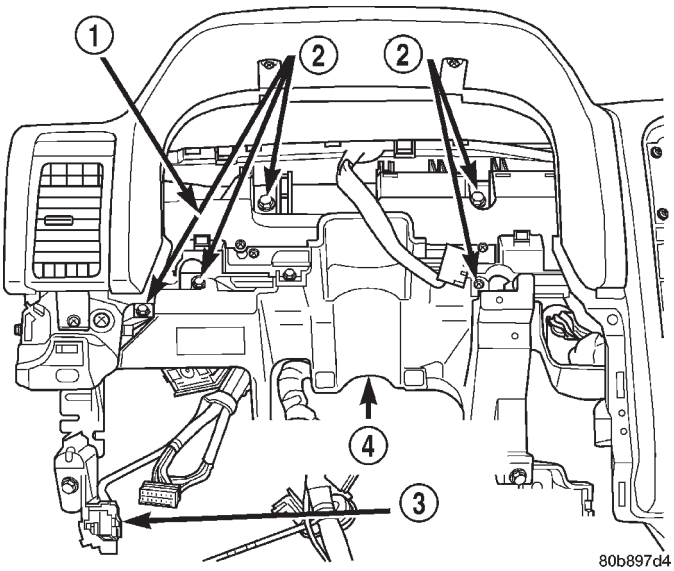

Fig. 35 Instrument Panel Steering Column Support Bracket Remove/Install

1 - STRUCTURAL DUCT
2 - SCREWS (5)
3 - 16–WAY DATA LINK CONNECTOR
4 - STEERING COLUMN SUPPORT BRACKET

INSTALLATION

WARNING: ON VEHICLES EQUIPPED WITH AIRBAGS, DISABLE THE AIRBAG SYSTEM BEFORE ATTEMPTING ANY STEERING WHEEL, STEERING COLUMN, OR INSTRUMENT PANEL COMPONENT DIAGNOSIS OR SERVICE. DISCONNECT AND ISOLATE THE BATTERY NEGATIVE (GROUND) CABLE, THEN WAIT TWO MINUTES FOR THE AIRBAG SYSTEM CAPACITOR TO DISCHARGE BEFORE PERFORMING FURTHER DIAGNOSIS OR SERVICE. THIS IS THE ONLY SURE WAY TO DISABLE THE AIRBAG SYSTEM. FAILURE TO TAKE THE PROPER PRECAUTIONS COULD RESULT IN ACCIDENTAL AIRBAG DEPLOYMENT AND POSSIBLE PERSONAL INJURY.

(1) Position the steering column support bracket to the instrument panel structural duct.

(2) From the face of the instrument panel, install and tighten the five screws that secure the steering column support bracket to the instrument panel structural duct (Fig. 35). Tighten the screws to 11.8 N·m (105 in. lbs.).

(3) Position the instrument panel wire harness mounting tabs to the back of the steering column support bracket.

(4) Install and tighten the three screws that secure the instrument panel wire harness mounting tabs to

INSTRUMENT PANEL STEERING COLUMN SUPPORT BRACKET (Continued)

the back of the steering column support bracket. Tighten the screws to 2.2 N·m (20 in. lbs.).

(5) Reinstall the instrument panel plenum bracket onto the steering column support bracket. (Refer to 23 - BODY/INSTRUMENT PANEL/INSTRUMENT PANEL PLENUM BRACKET - INSTALLATION).

(6) Reinstall the Junction Block (JB) and Body Control Module (BCM) unit onto the instrument panel steering column support bracket. (Refer to 8 - ELECTRICAL/POWER DISTRIBUTION/JUNCTION BLOCK - INSTALLATION).

(7) Position the 16-way data link connector to the instrument panel steering column support bracket.

(8) Install and tighten the two screws that secure the 16-way data link connector to the instrument panel steering column support bracket. Tighten the screws to 2.2 N·m (20 in. lbs.).

(9) Reinstall the instrument cluster onto the instrument panel. (Refer to 8 - ELECTRICAL/INSTRUMENT CLUSTER - INSTALLATION).

(10) Reconnect the battery negative cable.

INSTRUMENT PANEL TRIM BEZEL - DRIVER

REMOVAL

WARNING: ON VEHICLES EQUIPPED WITH AIRBAGS, DISABLE THE AIRBAG SYSTEM BEFORE ATTEMPTING ANY STEERING WHEEL, STEERING COLUMN, OR INSTRUMENT PANEL COMPONENT DIAGNOSIS OR SERVICE. DISCONNECT AND ISOLATE THE BATTERY NEGATIVE (GROUND) CABLE, THEN WAIT TWO MINUTES FOR THE AIRBAG SYSTEM CAPACITOR TO DISCHARGE BEFORE PERFORMING FURTHER DIAGNOSIS OR SERVICE. THIS IS THE ONLY SURE WAY TO DISABLE THE AIRBAG SYSTEM. FAILURE TO TAKE THE PROPER PRECAUTIONS COULD RESULT IN ACCIDENTAL AIRBAG DEPLOYMENT AND POSSIBLE PERSONAL INJURY.

(1) Disconnect and isolate the battery negative cable.

(2) Using a trim stick or another suitable wide flat-bladed tool, gently pry the edges of the driver side trim bezel up and away from the instrument panel far enough to disengage the two snap clips from their receptacles (Fig. 36).

(3) Remove the driver side trim bezel from the instrument panel top pad.

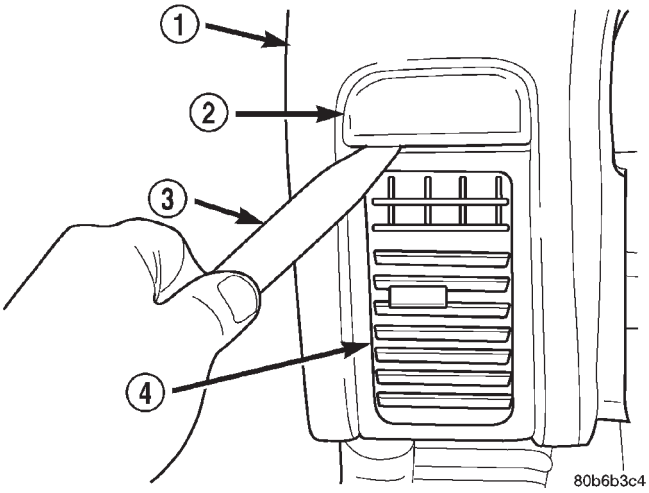

Fig. 36 Instrument Panel Driver Side Trim Bezel Remove/Install

1 - INSTRUMENT PANEL TOP PAD
2 - DRIVER SIDE TRIM BEZEL
3 - TRIM STICK
4 - PANEL OUTLET

INSTALLATION

WARNING: ON VEHICLES EQUIPPED WITH AIRBAGS, DISABLE THE AIRBAG SYSTEM BEFORE ATTEMPTING ANY STEERING WHEEL, STEERING COLUMN, OR INSTRUMENT PANEL COMPONENT DIAGNOSIS OR SERVICE. DISCONNECT AND ISOLATE THE BATTERY NEGATIVE (GROUND) CABLE, THEN WAIT TWO MINUTES FOR THE AIRBAG SYSTEM CAPACITOR TO DISCHARGE BEFORE PERFORMING FURTHER DIAGNOSIS OR SERVICE. THIS IS THE ONLY SURE WAY TO DISABLE THE AIRBAG SYSTEM. FAILURE TO TAKE THE PROPER PRECAUTIONS COULD RESULT IN ACCIDENTAL AIRBAG DEPLOYMENT AND POSSIBLE PERSONAL INJURY.

(1) Position the driver side trim bezel to the instrument panel top pad.

(2) Align the snap clips on the driver side trim bezel with the receptacles in the instrument panel top pad.

(3) Using hand pressure, press firmly and evenly on the driver side trim bezel over the snap clip locations until each of the snap clips is fully engaged in its receptacle.

(4) Reconnect the battery negative cable.

INSTRUMENT PANEL TRIM BEZEL - PASSENGER

REMOVAL

WARNING: ON VEHICLES EQUIPPED WITH AIRBAGS, DISABLE THE AIRBAG SYSTEM BEFORE ATTEMPTING ANY STEERING WHEEL, STEERING COLUMN, OR INSTRUMENT PANEL COMPONENT DIAGNOSIS OR SERVICE. DISCONNECT AND ISOLATE THE BATTERY NEGATIVE (GROUND) CABLE, THEN WAIT TWO MINUTES FOR THE AIRBAG SYSTEM CAPACITOR TO DISCHARGE BEFORE PERFORMING FURTHER DIAGNOSIS OR SERVICE. THIS IS THE ONLY SURE WAY TO DISABLE THE AIRBAG SYSTEM. FAILURE TO TAKE THE PROPER PRECAUTIONS COULD RESULT IN ACCIDENTAL AIRBAG DEPLOYMENT AND POSSIBLE PERSONAL INJURY.

(1) Disconnect and isolate the battery negative cable.

(2) Remove the top pad from the instrument panel. (Refer to 23 - BODY/INSTRUMENT PANEL/INSTRUMENT PANEL TOP PAD - REMOVAL).

(3) From the underside of the top pad, remove the four screws from the top of the passenger airbag door that secure the passenger side trim bezel to the instrument panel (Fig. 37).

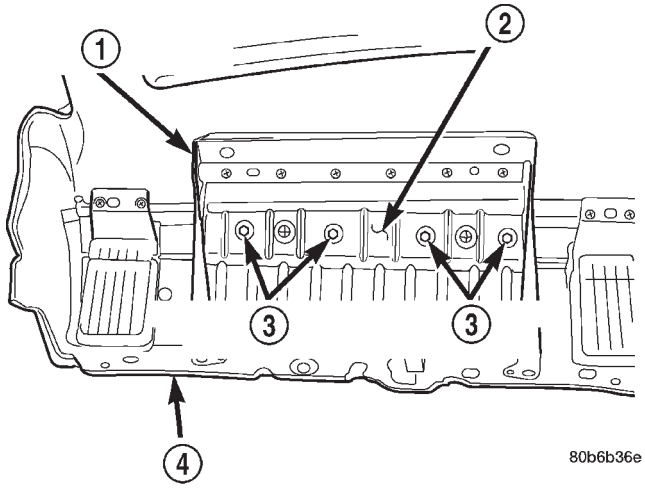

Fig. 37 Instrument Panel Passenger Side Trim Bezel Remove/Install

1 - INSTRUMENT PANEL AIRBAG DOOR REINFORCEMENT
2 - PASSENGER AIRBAG DOOR
3 - PASSENGER SIDE TRIM BEZEL SCREWS (4)
4 - INSTRUMENT PANEL TOP PAD

(4) Remove the passenger side trim bezel from the instrument panel top pad.

INSTALLATION

WARNING: ON VEHICLES EQUIPPED WITH AIRBAGS, DISABLE THE AIRBAG SYSTEM BEFORE ATTEMPTING ANY STEERING WHEEL, STEERING COLUMN, OR INSTRUMENT PANEL COMPONENT DIAGNOSIS OR SERVICE. DISCONNECT AND ISOLATE THE BATTERY NEGATIVE (GROUND) CABLE, THEN WAIT TWO MINUTES FOR THE AIRBAG SYSTEM CAPACITOR TO DISCHARGE BEFORE PERFORMING FURTHER DIAGNOSIS OR SERVICE. THIS IS THE ONLY SURE WAY TO DISABLE THE AIRBAG SYSTEM. FAILURE TO TAKE THE PROPER PRECAUTIONS COULD RESULT IN ACCIDENTAL AIRBAG DEPLOYMENT AND POSSIBLE PERSONAL INJURY.

(1) Position the passenger side trim bezel to the instrument panel top pad.

(2) From the underside of the top pad, install and tighten the four screws through the passenger airbag door that secure the passenger side trim bezel to the instrument panel (Fig. 37). Tighten the screws to 11.8 N·m (105 in. lbs.).

(3) Reinstall the top pad onto the instrument panel. (Refer to 23 - BODY/INSTRUMENT PANEL/INSTRUMENT PANEL TOP PAD - INSTALLATION).

(4) Reconnect the battery negative cable.

POWER OUTLET DOOR

REMOVAL

WARNING: ON VEHICLES EQUIPPED WITH AIRBAGS, DISABLE THE AIRBAG SYSTEM BEFORE ATTEMPTING ANY STEERING WHEEL, STEERING COLUMN, OR INSTRUMENT PANEL COMPONENT DIAGNOSIS OR SERVICE. DISCONNECT AND ISOLATE THE BATTERY NEGATIVE (GROUND) CABLE, THEN WAIT TWO MINUTES FOR THE AIRBAG SYSTEM CAPACITOR TO DISCHARGE BEFORE PERFORMING FURTHER DIAGNOSIS OR SERVICE. THIS IS THE ONLY SURE WAY TO DISABLE THE AIRBAG SYSTEM. FAILURE TO TAKE THE PROPER PRECAUTIONS COULD RESULT IN ACCIDENTAL AIRBAG DEPLOYMENT AND POSSIBLE PERSONAL INJURY.

(1) Disconnect and isolate the battery negative cable.

(2) Remove the center lower bezel from the instrument panel. (Refer to 23 - BODY/INSTRUMENT PANEL/IP CENTER BEZEL - LOWER - REMOVAL).

POWER OUTLET DOOR (Continued)

(3) With the power outlet door in the open position, carefully spread the power outlet door hinge arms far enough to disengage the pivot pins from the pivots on the back side of the center lower bezel (Fig. 38).

NOTE: The power outlet door is more easily serviced while in the open position. The illustration shows the door in the closed position for improved visibility of the assist spring orientation and anchor point details.

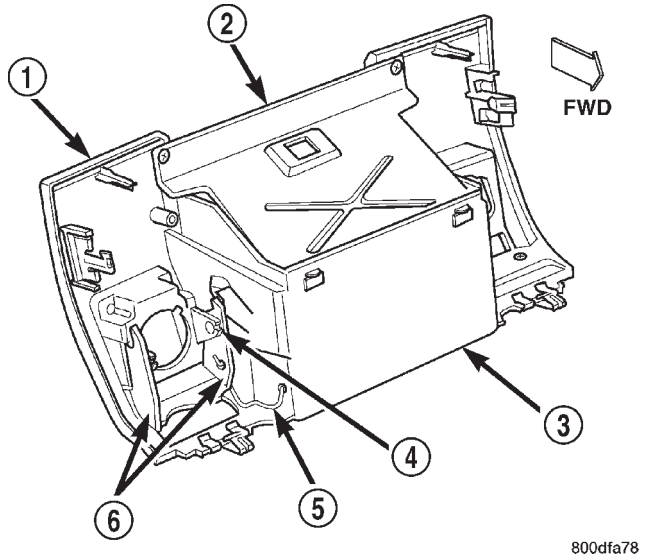

Fig. 38 Instrument Panel Power Outlet Door Remove/Install

1 - CENTER LOWER BEZEL
2 - ASH RECEIVER FLAME SHIELD
3 - ASH RECEIVER HOUSING
4 - PIVOT PINS
5 - ASSIST SPRING
6 - POWER OUTLET DOOR HINGE ARMS

(4) Disengage the stepped ends of the assist spring from the anchor holes in the inboard power outlet door hinge arm and in the side of the ash receiver housing.

(5) Remove the power outlet door from the instrument panel center lower bezel.

INSTALLATION

WARNING: ON VEHICLES EQUIPPED WITH AIRBAGS, DISABLE THE AIRBAG SYSTEM BEFORE ATTEMPTING ANY STEERING WHEEL, STEERING COLUMN, OR INSTRUMENT PANEL COMPONENT DIAGNOSIS OR SERVICE. DISCONNECT AND ISOLATE THE BATTERY NEGATIVE (GROUND) CABLE, THEN WAIT TWO MINUTES FOR THE AIRBAG SYSTEM CAPACITOR TO DISCHARGE BEFORE PERFORMING FURTHER DIAGNOSIS OR SERVICE. THIS IS THE ONLY SURE WAY TO DISABLE THE AIRBAG SYSTEM. FAILURE TO TAKE THE PROPER PRECAUTIONS COULD RESULT IN ACCIDENTAL AIRBAG DEPLOYMENT AND POSSIBLE PERSONAL INJURY.

(1) Position the power outlet door to the instrument panel center lower bezel.

(2) Engage the stepped ends of the assist spring with the anchor holes in the inboard power outlet door hinge arm and in the side of the ash receiver housing (Fig. 38).

(3) With the power outlet door in the open position, carefully spread the power outlet door hinge arms far enough to engage the pivot pins with the pivots on the back side of the lower center bezel.

(4) Reinstall the center lower bezel into the instrument panel. (Refer to 23 - BODY/INSTRUMENT PANEL/IP CENTER BEZEL - LOWER - INSTALLATION).

(5) Reconnect the battery negative cable.

STEERING COLUMN OPENING COVER

REMOVAL

WARNING: ON VEHICLES EQUIPPED WITH AIRBAGS, DISABLE THE AIRBAG SYSTEM BEFORE ATTEMPTING ANY STEERING WHEEL, STEERING COLUMN, OR INSTRUMENT PANEL COMPONENT DIAGNOSIS OR SERVICE. DISCONNECT AND ISOLATE THE BATTERY NEGATIVE (GROUND) CABLE, THEN WAIT TWO MINUTES FOR THE AIRBAG SYSTEM CAPACITOR TO DISCHARGE BEFORE PERFORMING FURTHER DIAGNOSIS OR SERVICE. THIS IS THE ONLY SURE WAY TO DISABLE THE AIRBAG SYSTEM. FAILURE TO TAKE THE PROPER PRECAUTIONS COULD RESULT IN ACCIDENTAL AIRBAG DEPLOYMENT AND POSSIBLE PERSONAL INJURY.

(1) Disconnect and isolate the battery negative cable.

(2) Remove the fuse cover from the Junction Block (JB) and Body Control Module (BCM) unit under the driver side outboard end of the instrument panel. (Refer to 8 - ELECTRICAL/POWER DISTRIBUTION/FUSE COVER - REMOVAL).

(3) Remove the cluster bezel from the instrument panel. (Refer to 23 - BODY/INSTRUMENT PANEL/CLUSTER BEZEL - REMOVAL).

(4) Remove the one screw that secures the outboard end of the steering column opening cover to the U-nut on the outboard end of the instrument panel top pad (Fig. 39).

STEERING COLUMN OPENING COVER (Continued)

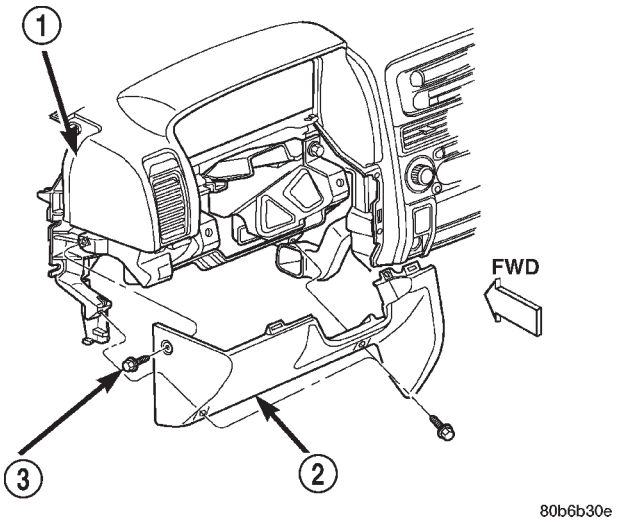

Fig. 39 Steering Column Opening Cover Remove/ Install

1 - INSTRUMENT PANEL TOP PAD
2 - STEERING COLUMN OPENING COVER
3 - SCREW (3)

(5) Remove the two screws that secure the lower edge of the steering column opening cover to the U-nuts on the instrument panel steering column support bracket.

(6) Pull the steering column opening cover rearward to disengage the three snap clips (one outboard and two inboard) that secure it to the receptacles in the instrument panel.

(7) Remove the steering column opening cover from the instrument panel.

INSTALLATION

WARNING: ON VEHICLES EQUIPPED WITH AIRBAGS, DISABLE THE AIRBAG SYSTEM BEFORE ATTEMPTING ANY STEERING WHEEL, STEERING COLUMN, OR INSTRUMENT PANEL COMPONENT DIAGNOSIS OR SERVICE. DISCONNECT AND ISOLATE THE BATTERY NEGATIVE (GROUND) CABLE, THEN WAIT TWO MINUTES FOR THE AIRBAG SYSTEM CAPACITOR TO DISCHARGE BEFORE PERFORMING FURTHER DIAGNOSIS OR SERVICE. THIS IS THE ONLY SURE WAY TO DISABLE THE AIRBAG SYSTEM. FAILURE TO TAKE THE PROPER PRECAUTIONS COULD RESULT IN ACCIDENTAL AIRBAG DEPLOYMENT AND POSSIBLE PERSONAL INJURY.

(1) Position the steering column opening cover onto the instrument panel (Fig. 39).

(2) Align the three snap clips on the steering column opening cover with their receptacles in the instrument panel.

(3) Using hand pressure, press firmly and evenly on the steering column opening cover over the snap clip locations until each of the snap clips is fully engaged in its receptacle.

(4) Install and tighten the two screws that secure the lower edge of the steering column opening cover to the instrument panel steering column support bracket. Tighten the screws to 2.2 N·m (20 in. lbs.).

(5) Install and tighten the one screw that secures the outboard end of the steering column opening cover to the U-nut on the outboard end of the instrument panel top pad. Tighten the screw to 2.2 N·m (20 in. lbs.).

(6) Reinstall the cluster bezel onto the instrument panel. (Refer to 23 - BODY/INSTRUMENT PANEL/ CLUSTER BEZEL - INSTALLATION).

(7) Reinstall the fuse cover onto the Junction Block (JB) and Body Control Module (BCM) unit under the driver side outboard end of the instrument panel. (Refer to 8 - ELECTRICAL/POWER DISTRIBUTION/FUSE COVER - INSTALLATION).

(8) Reconnect the battery negative cable.

INTERIOR

TABLE OF CONTENTS

page

A-PILLAR TRIM
REMOVAL 158
INSTALLATION 158
ASSIST HANDLE
REMOVAL 159
INSTALLATION 159
B-PILLAR LOWER TRIM
REMOVAL 159
INSTALLATION 159
B-PILLAR UPPER TRIM
REMOVAL 159
INSTALLATION 159
CARPETS AND FLOOR MATS
REMOVAL 159
INSTALLATION 161
COWL TRIM
REMOVAL 161
INSTALLATION 161
C-PILLAR TRIM
REMOVAL 162
INSTALLATION 162
DOOR SILL SCUFF PLATE
REMOVAL 163
INSTALLATION 163
DOOR SILL TRIM
REMOVAL 163
INSTALLATION 163
D-PILLAR TRIM
REMOVAL 163
INSTALLATION 163
FLOOR CONSOLE
REMOVAL 164
INSTALLATION 165
HEADLINER
REMOVAL 165
INSTALLATION 166
LIFTGATE OPENING UPPER TRIM
REMOVAL 167
INSTALLATION 167
QUARTER TRIM PANEL
REMOVAL 168
INSTALLATION 168
REAR STORAGE BOX
REMOVAL 168
INSTALLATION 168
REAR VIEW MIRROR
REMOVAL 168
INSTALLATION 168
SUN VISOR
REMOVAL 169
INSTALLATION 169

A-PILLAR TRIM

REMOVAL

The A-pillar trim is attached to the A-pillar with spring clips.

(1) Grasp A-pillar trim and pull trim outward from A-pillar (Fig. 1).

(2) Separate A-pillar trim from A-pillar.

INSTALLATION

(1) Position A-pillar trim on A-pillar and, starting at the bottom, press into place (Fig. 1).

(2) Using a trim stick or other suitable tool, carefully cover the edge of the trim with weatherstrip.

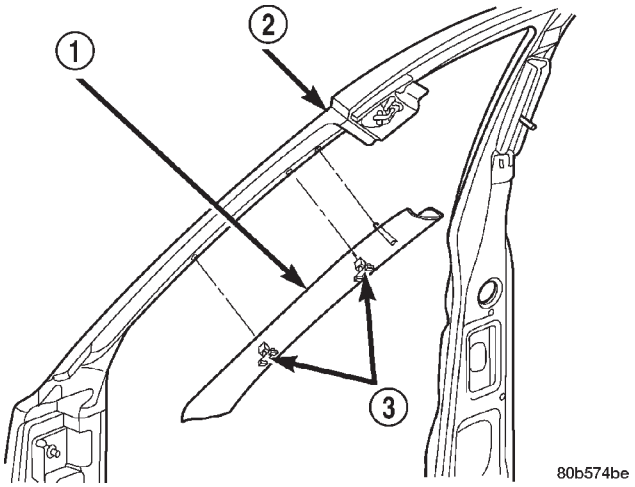

Fig. 1 A-Pillar Trim

1 - A-PILLAR TRIM
2 - A-PILLAR
3 - SPRING CLIP

ASSIST HANDLE

REMOVAL

(1) Remove the screws holding the assist handle to the roof panel.

(2) Remove the assist handle from the roof panel.

INSTALLATION

(1) Align the assist handle with the screw holes in the roof panel.

(2) Install the screws holding the assist handle to the roof panel.

B-PILLAR LOWER TRIM

REMOVAL

(1) Remove front door sill trim (Refer to 23 - BODY/INTERIOR/DOOR SILL TRIM - REMOVAL).

(2) Remove front seat shoulder belt anchor bolt.

(3) Remove front seat shoulder belt height adjustment knob and turning loop.

(4) Remove screw attaching front of quarter panel trim to floor.

(5) Remove screws attaching front and rear of B-pillar lower trim to floor.

(6) Remove screw attaching B-pillar lower trim to B-pillar (Fig. 2).

(7) Grasp B-pillar lower trim and pull outward to separate from B-pillar.

(8) Route seat/shoulder belt through access slot in B-pillar lower trim.

(9) Separate B-pillar lower trim from B-pillar.

INSTALLATION

(1) Position B-pillar lower trim panel at B-pillar (Fig. 2).

(2) Route seat/shoulder belt through access slot in B-pillar lower trim.

(3) Press B-pillar lower trim onto B-pillar.

(4) Install screw attaching B-pillar lower trim to B-pillar.

(5) Install screw attaching front of B-pillar lower trim to floor.

(6) Install screw attaching front of quarter panel trim to floor.

(7) Install front seat shoulder belt anchor bolt.

(8) Install front seat shoulder belt height adjustment knob and turning loop.

(9) Install front door sill trim (Refer to 23 - BODY/INTERIOR/DOOR SILL TRIM - INSTALLATION).

B-PILLAR UPPER TRIM

REMOVAL

(1) Remove shoulder belt height adjustment knob.

(2) Remove front seat belt turning loop.

(3) Remove the screw attaching lower B pillar trim.

(4) Pull lower B pillar trim out far enough to remove upper trim panel.

(5) Grasp upper B-pillar trim and pull outward to detach from B-pillar (Fig. 2).

INSTALLATION

(1) Position trim panel on B-pillar (Fig. 2).

(2) Ensure trim panel covers inner edge of door opening weatherstrip and press inward to seat.

(3) Install screw attaching lower B pillar trim panel.

(4) Install front seat belt turning loop.

(5) Install shoulder belt height adjustment knob.

CARPETS AND FLOOR MATS

REMOVAL - FRONT CARPET

(1) Remove door sill trim (Refer to 23 - BODY/INTERIOR/DOOR SILL TRIM - REMOVAL).

(2) Remove the B-pillar lower trim, refer to (Refer to 23 - BODY/INTERIOR/B-PILLAR LOWER TRIM - REMOVAL).

(3) Remove front seats (Refer to 23 - BODY/SEATS/SEAT - REMOVAL).

(4) Remove the rear seats lower cushions (Refer to 23 - BODY/SEATS/SEAT CUSHION - REMOVAL).

(5) Remove center floor console (Refer to 23 - BODY/INTERIOR/FLOOR CONSOLE - REMOVAL).

(6) Remove any other interfering trim or molding.

(7) Lift carpet and mat from floor panel.

REMOVAL - CARGO AREA CARPET

(1) Lift tailgate.

(2) Fold rear seat cushions forward.

(3) Remove rear seat backs (Refer to 23 - BODY/SEATS/REAR SEAT BACK - REMOVAL).

(4) Remove the rear shoulder belts (Refer to 8 - ELECTRICAL/RESTRAINTS/REAR SEAT BELT & RETRACTOR - REMOVAL).

(5) Remove the retractable security cargo cover assembly.

(6) Remove the spare tire cover.

CARPETS AND FLOOR MATS (Continued)

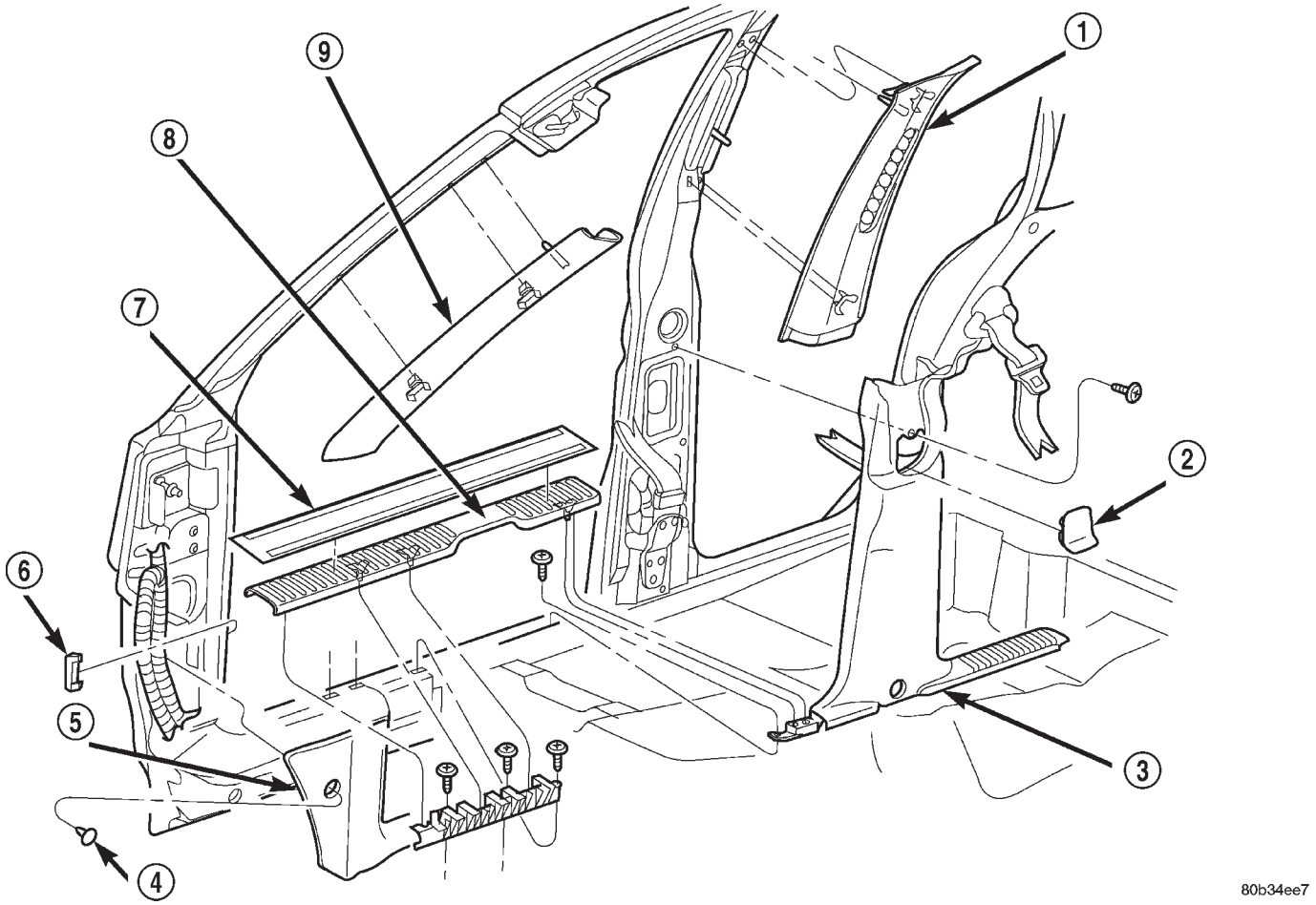

Fig. 2 B-Pillar Trim Panel

1 - B-PILLAR UPPER TRIM
2 - ACCESS COVER
3 - B-PILLAR LOWER TRIM
4 - PLASTIC NUT
5 - COWL LOWER TRIM
6 - CLIP
7 - SCUFF PLATE
8 - SILL TRIM
9 - A-PILLAR TRIM

CARPETS AND FLOOR MATS (Continued)

(7) Remove the rear cargo tie down footman loops. The side mounted footman loops are retained by screws. The floor footman loops are riveted (Fig. 3).

(8) Remove the C pillar trim (Refer to 23 - BODY/INTERIOR/C-PILLAR TRIM - REMOVAL).

(9) Remove the CD changer, if equipped (Refer to 8 - ELECTRICAL/AUDIO/CD CHANGER - REMOVAL).

(10) Remove the Infinity amp, if equipped (Refer to 8 - ELECTRICAL/AUDIO/AMPLIFIER - REMOVAL).

(11) Lift the carpet.

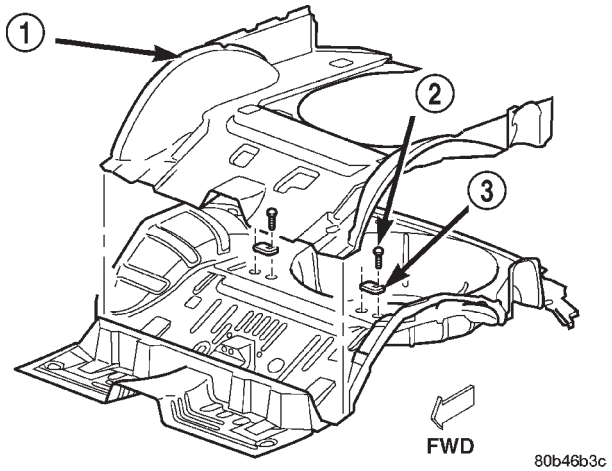

Fig. 3 Cargo Area Carpet

1 - CARGO AREA CARPET
2 - RIVET
3 - CARGO TIE-DOWN LOOP

INSTALLATION - FRONT CARPET

(1) Carefully lay the carpet and mat on the floor panel. Align the carpet to allow installation of the components fastened to the floor panel.

(2) Install the center console (Refer to 23 - BODY/INTERIOR/FLOOR CONSOLE - INSTALLATION).

(3) Install the front seats (Refer to 23 - BODY/SEATS/SEAT - INSTALLATION).

(4) Install the rear seat cushions (Refer to 23 - BODY/SEATS/SEAT CUSHION - INSTALLATION).

(5) Install the lower B pillar trim (Refer to 23 - BODY/INTERIOR/B-PILLAR LOWER TRIM - INSTALLATION).

(6) Install the door sill trim (Refer to 23 - BODY/INTERIOR/DOOR SILL TRIM - INSTALLATION).

(7) Install any other moldings or trim panels removed.

INSTALLATION - CARGO AREA CARPET

(1) Thoroughly clean the area with Mopar Super Kleen®, or equivalent.

(2) Lay the new carpet in.

(3) Install the “C” pillar trim (Refer to 23 - BODY/INTERIOR/C-PILLAR TRIM - INSTALLATION).

(4) Install the CD changer, if equipped (Refer to 8 - ELECTRICAL/AUDIO/CD CHANGER - INSTALLATION).

(5) Install the footman loops (Fig. 3).

(6) Install the rear shoulder belts (Refer to 8 - ELECTRICAL/RESTRAINTS/REAR SEAT BELT & RETRACTOR - INSTALLATION).

(7) Install the rear seat backs (Refer to 23 - BODY/SEATS/REAR SEAT BACK - INSTALLATION).

(8) Install the Infinity amp, if equipped (Refer to 8 - ELECTRICAL/AUDIO/AMPLIFIER - INSTALLATION).

(9) Install the spare tire cover.

(10) Install the retractable security cover.

COWL TRIM

REMOVAL

(1) Remove front door sill trim (Refer to 23 - BODY/INTERIOR/DOOR SILL TRIM - REMOVAL).

(2) Remove screws attaching cowl trim to floor.

(3) Remove plastic nut.

(4) Grasp cowl trim and pull outward to separate from clip.

(5) Separate cowl trim from vehicle.

INSTALLATION

(1) Position cowl trim and press into place.

(2) Install screws attaching cowl trim to floor.

(3) Install plastic nut.

(4) Install front door sill trim (Refer to 23 - BODY/INTERIOR/DOOR SILL TRIM - INSTALLATION).

COWL TRIM (Continued)

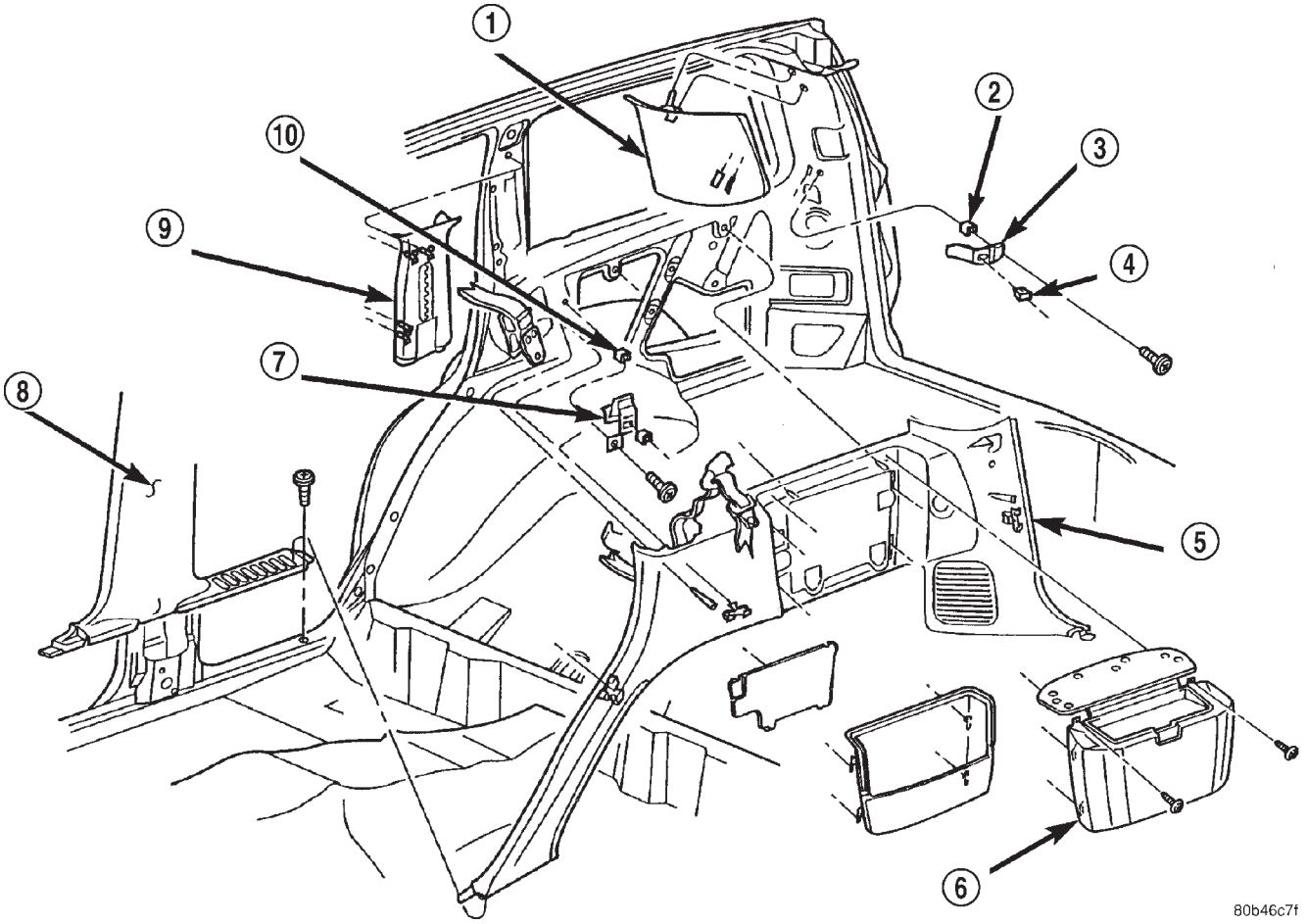

Fig. 4 Right Side Trim Panel

1 - D-PILLAR TRIM
2 - SNAP-IN NUT
3 - BRACKET
4 - SNAP-IN NUT
5 - QUARTER TRIM PANEL
6 - STORAGE BIN
7 - BRACKET
8 - B-PILLAR LOWER TRIM
9 - C-PILLAR UPPER TRIM
10 - SNAP-IN NUT

C-PILLAR TRIM

REMOVAL

(1) Remove rear shoulder belt turning loop.
(2) Remove rear shoulder belt height adjustment knob.
(3) Remove screws attaching quarter panel trim.
(4) Pull quarter panel trim outward as necessary.
(5) Grasp C-pillar upper trim and pull outward to disengage from C-pillar (Fig. 4).
(6) Route rear shoulder belt through access hole.
(7) Separate C-pillar upper trim from vehicle.

INSTALLATION

(1) Position C-pillar upper trim at C-pillar (Fig. 4).
(2) Route rear shoulder belt through access hole.
(3) Press C-pillar upper trim onto C-pillar.
(4) Press quarter panel trim into place as necessary.
(5) Ensure front edge of trim is covered by weatherstrip.
(6) Install screws attaching quarter panel trim.
(7) Install rear shoulder belt height adjustment knob.
(8) Install rear shoulder belt turning loop.

DOOR SILL SCUFF PLATE

REMOVAL

(1) Using a trim stick or other suitable tool, carefully pry up the scuff plate from the door sill (Fig. 5).

(2) Remove the scuff plate.

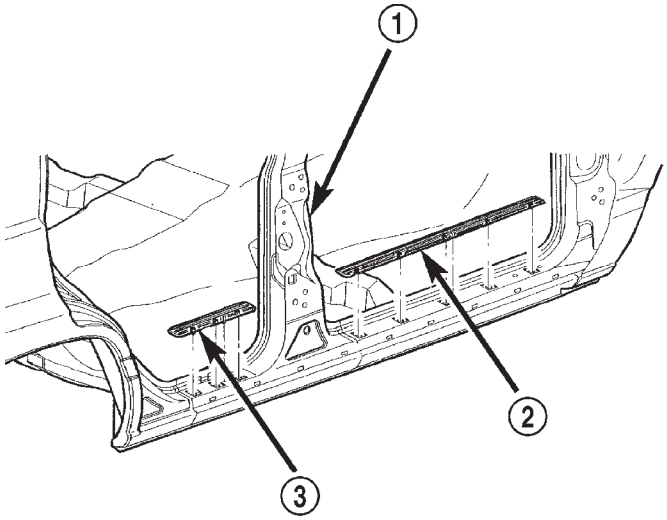

80ba797a

Fig. 5 Door Sill Scuff Plates

1 - B-PILLAR
2 - FRONT DOOR SCUFF PLATE
3 - REAR DOOR SCUFF PLATE

INSTALLATION

(1) Install the scuff plate on the door sill (Fig. 5).

(2) Press the molded in snap retainers into the door sill.

DOOR SILL TRIM

REMOVAL

The sill trim molding is held in place with molded in snap retainers (Fig. 6).

(1) Using a trim stick or other suitable device, carefully pry up one corner of the sill trim.

(2) Grasp the edge of the trim and pull up gently to release the snap retainers.

INSTALLATION

(1) Position the sill molding on the door sill.

(2) Press the snap retainers into place.

D-PILLAR TRIM

REMOVAL

The D-pillar trim is attached to the D-pillar with spring clips (Fig. 7).

(1) Remove liftgate opening upper trim panel (Refer to 23 - BODY/INTERIOR/LIFTGATE OPENING UPPER TRIM - REMOVAL).

(2) Grasp D-pillar trim and pull outward from D-pillar.

(3) Separate D-pillar trim from D-pillar.

INSTALLATION

(1) Position D-pillar trim panel at D-pillar and press into place.

(2) Install upper liftgate opening trim panel (Refer to 23 - BODY/INTERIOR/LIFTGATE OPENING UPPER TRIM - INSTALLATION).

D-PILLAR TRIM (Continued)

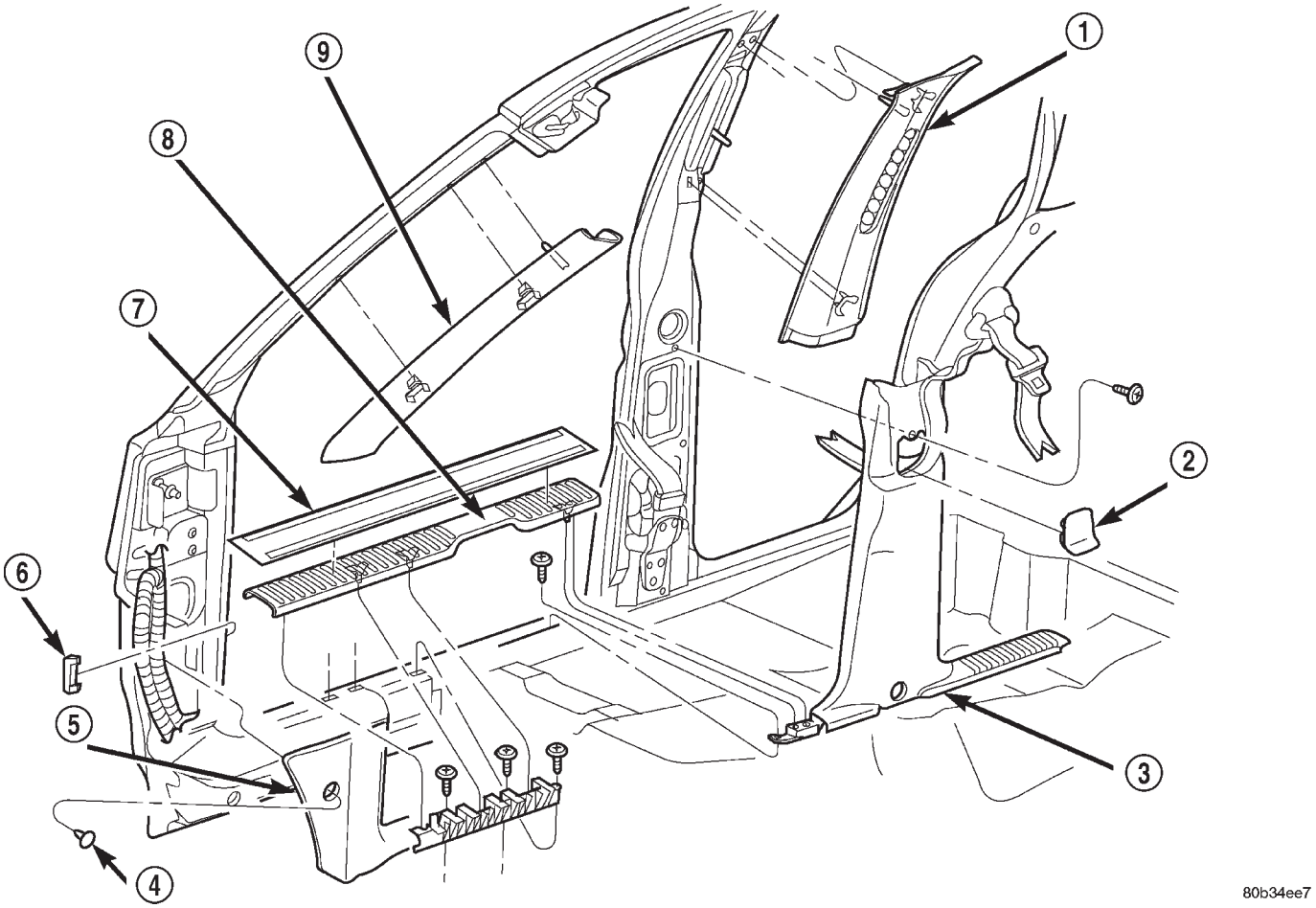

Fig. 6 Sill Trim Molding

1 - B-PILLAR UPPER TRIM
2 - ACCESS COVER
3 - B-PILLAR LOWER TRIM
4 - PLASTIC NUT
5 - COWL LOWER TRIM
6 - CLIP
7 - SCUFF PLATE
8 - SILL TRIM
9 - A-PILLAR TRIM

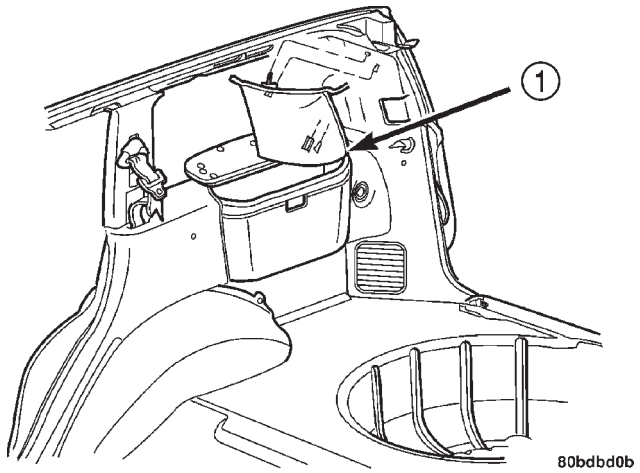

Fig. 7 D Pillar Upper Trim

1 - D PILLAR UPPER TRIM

FLOOR CONSOLE

REMOVAL

CAUTION: The ACM should be depowered by disconnecting the negative battery cable in any operation requiring the key to be turned "ON", while working in the console area. E.G. console, carpet, or seat removal or installation; shifter linkage adjustment or replacement; parking brake cable replacement or adjustment. Failure to take proper precautions could result in accidental airbag deployment and possible personal injury.

(1) Set park brake.

(2) Place transmission shift lever and transfer case lever in full rearward position.

FLOOR CONSOLE (Continued)

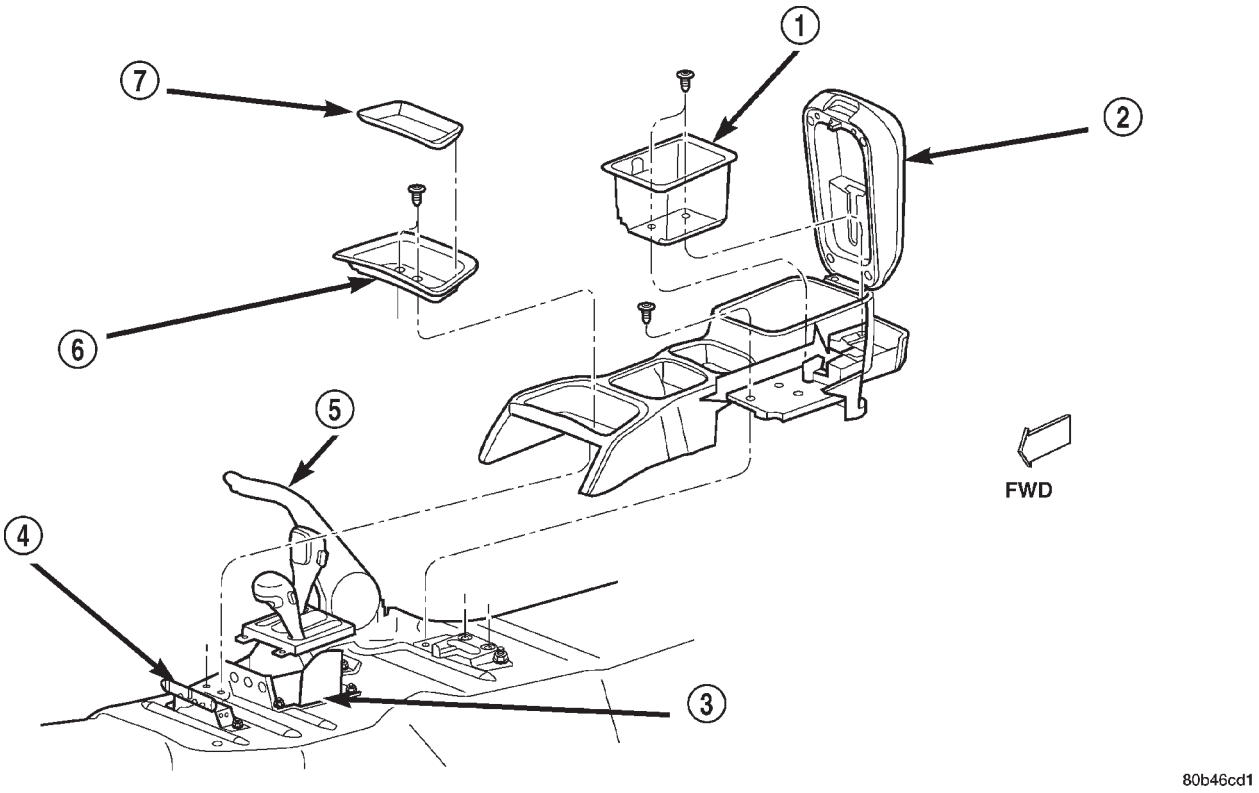

Fig. 8 Floor Console

1 - REAR BIN
2 - CONSOLE LID
3 - SHIFTER CONSOLE
4 - BRACKET
5 - PARKING BRAKE
6 - FRONT PIN
7 - MAT

(3) Remove mat from front bin and remove screws attaching front of console to floor (Fig. 8).
(4) Remove screws attaching rear bin to console.
(5) Remove rear bin.
(6) Pull rear passenger cupholder outward to access screws.
(7) Remove screws attaching rear of console to floor.
(8) Lift the console upward and rearward.
(9) Remove console from vehicle.

INSTALLATION

CAUTION: The ACM should be depowered by disconnecting the negative battery cable in any operation requiring the key to be turned "ON", while working in the console area. E.G. console, carpet, or seat removal or installation; shifter linkage adjustment or replacement; parking brake cable replacement or adjustment. Failure to take proper precautions could result in accidental airbag deployment and possible personal injury.

(1) Position console in vehicle. Ensure rear passenger HEVAC duct is engaged.
(2) Install screws attaching rear of console to floor.
(3) Position rear bin in console.
(4) Install screws attaching rear bin to console.
(5) Install screws attaching front of console to floor and place front bin mat in front bin.
(6) Return transmission shift lever and transfer case lever to original position.
(7) Release park brake.

HEADLINER

REMOVAL

CAUTION: The headliner is a one-piece, molded component. It has limited flexibility and must not be bent. Damage may possibly result.

(1) Record radio presets and disconnect negative battery cable.
(2) Remove A pillar trim moldings (Refer to 23 - BODY/INTERIOR/A-PILLAR TRIM - REMOVAL).

HEADLINER (Continued)

(3) Remove B pillar upper trim moldings (Refer to 23 - BODY/INTERIOR/B-PILLAR UPPER TRIM - REMOVAL).

(4) Remove C pillar trim moldings (Refer to 23 - BODY/INTERIOR/C-PILLAR TRIM - REMOVAL).

(5) Remove D pillar trim molding (Refer to 23 - BODY/INTERIOR/D-PILLAR TRIM - REMOVAL).

(6) Remove the sun visors (Refer to 23 - BODY/INTERIOR/SUN VISOR - REMOVAL).

(7) Disconnect the vanity lamp electrical connector.

(8) Remove assist handles from roof rails (Refer to 23 - BODY/INTERIOR/ASSIST HANDLE - REMOVAL).

(9) Remove dome lamp and overhead console, if equipped.

(10) Remove rear cargo/dome lamp.

(11) Remove sun roof pinch welt, if equipped.

(12) Disengage rear washer hose from liftgate (Fig. 9).

(13) Disengage the wire harness connectors at rear of headliner.

(14) Disconnect the rear washer hose at the left “A” pillar (Fig. 10).

(15) Disengage the wire harness for the sunroof, if equipped.

(16) Fold down the rear seats, move the front seats full forward, and lower the front seat backs.

(17) Partially lower the headliner and disengage the sunroof drain hoses, if equipped (Fig. 11).

(18) With the aid of an assistant, remove the headliner through the liftgate opening.

INSTALLATION

(1) With the aid of an assistant, position the headliner in the vehicle.

(2) Connect the sunroof drain hoses, if equipped.

(3) Connect the sunroof harness, the rear wire harnesses, and the washer hose at the “A” pillar and at the liftgate.

(4) Install the sunroof pinch welt, if equipped.

(5) Install the roof rail assist handles (Refer to 23 - BODY/INTERIOR/ASSIST HANDLE - INSTALLATION).

(6) Install the sun visors (Refer to 23 - BODY/INTERIOR/SUN VISOR - INSTALLATION).

(7) Install the overhead console, if equipped.

(8) Install the rear cargo/dome lamp.

(9) Install the D pillar trim (Refer to 23 - BODY/INTERIOR/D-PILLAR TRIM - INSTALLATION).

(10) Install the C pillar trim (Refer to 23 - BODY/INTERIOR/C-PILLAR TRIM - INSTALLATION).

(11) Install the upper B pillar trim (Refer to 23 - BODY/INTERIOR/B-PILLAR UPPER TRIM - INSTALLATION).

(12) Install the A pillar trim (Refer to 23 - BODY/INTERIOR/A-PILLAR TRIM - INSTALLATION).

(13) Connect the negative battery cable.

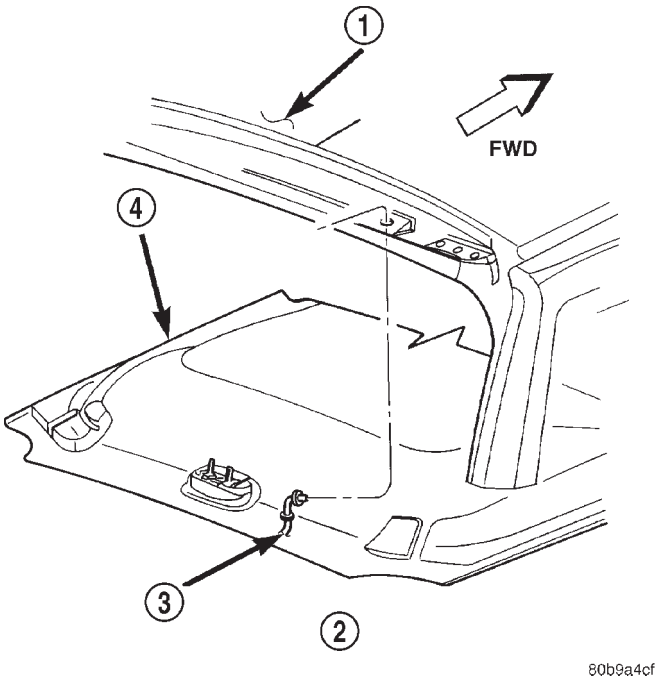

Fig. 9 Liftgate Washer Hose Routing at Rear of Headliner

1 - ROOF
2 - REAR WASHER HOSE ROUTING
3 - REAR WASHER HOSE
4 - HEADLINER

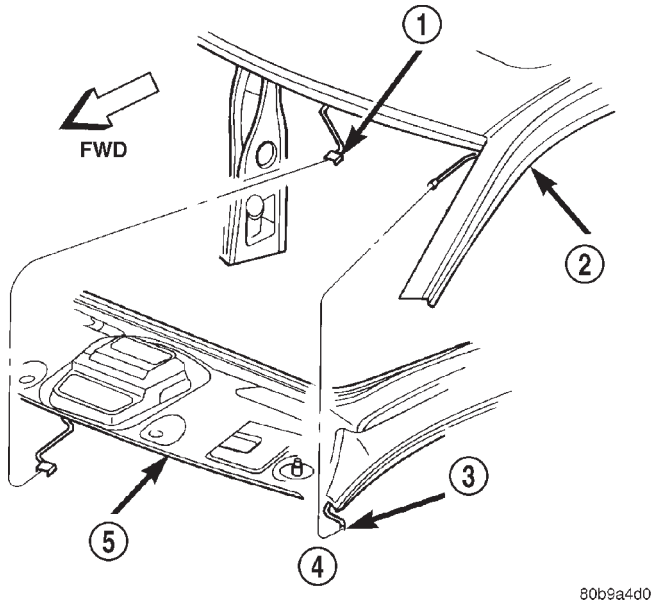

Fig. 10 Rear Liftgate Washer Hose Routing at A Pillar

1 - OVERHEAD CONSOLE WIRE HARNESS
2 - ROOF
3 - REAR WASHER HOSE
4 - REAR WASHER HOSE ROUTING
5 - HEADLINER

HEADLINER (Continued)

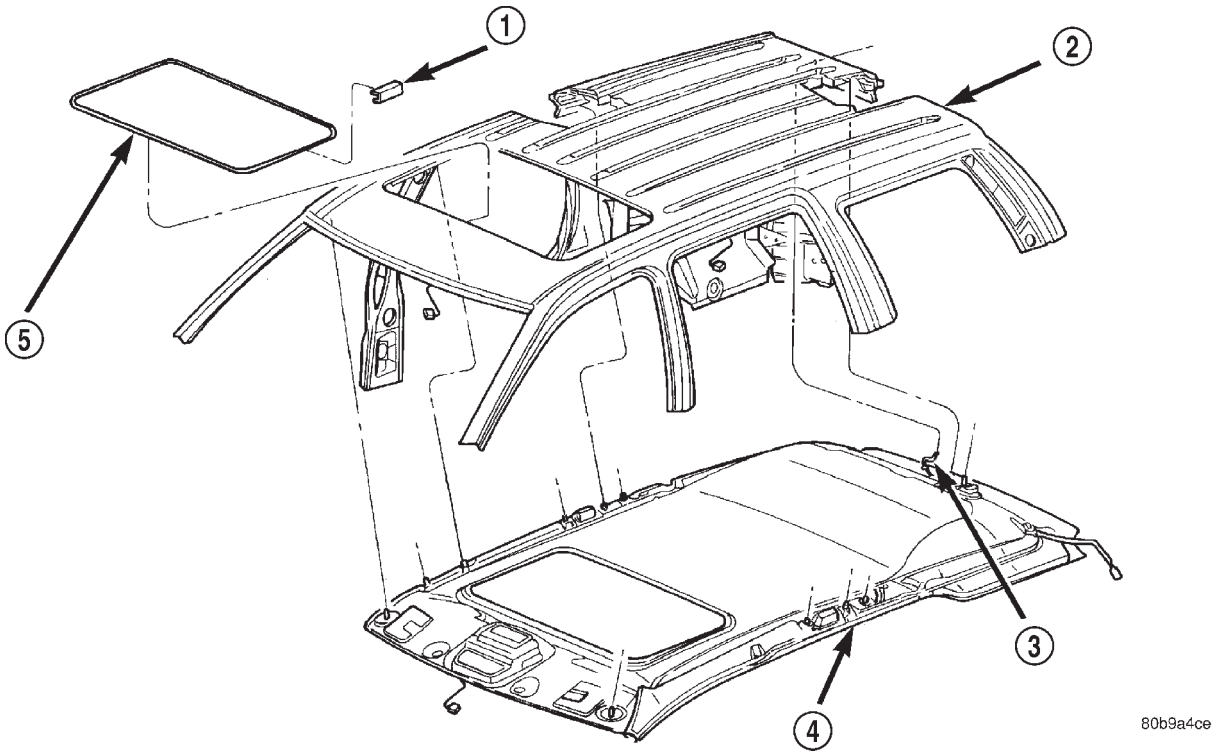

Fig. 11 Headliner

1 - SUNROOF PINCH WELT
2 - ROOF
3 - REAR WASHER HOSE
4 - HEADLINER
5 - SUNROOF

LIFTGATE OPENING UPPER TRIM

REMOVAL

The upper liftgate opening trim is held on with spring clips.

(1) Grasp the rear of the trim piece and pull down and back to disengage clips (Fig. 12).

(2) Slide the trim piece to the rear to disengage headliner locating hooks.

INSTALLATION

The liftgate upper opening trim piece is equipped with headliner locating hooks (Fig. 13).

(1) Align the locating hooks with the slots in the headliner.

(2) Engage the spring clips and press the liftgate upper opening trim panel into place.

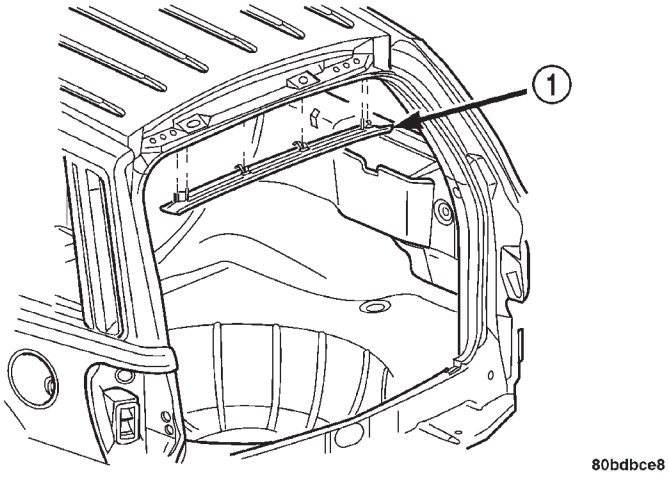

Fig. 12 Upper Liftgate Opening Trim

1 - UPPER LIFTGATE OPENING TRIM

LIFTGATE OPENING UPPER TRIM (Continued)

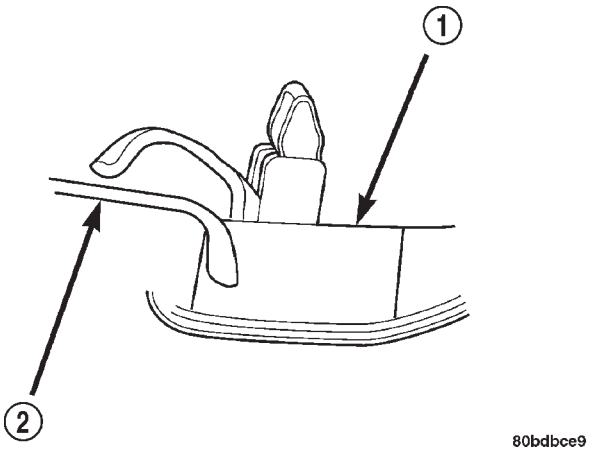

Fig. 13 Headliner Locating Hooks

1 - UPPER LIFTGATE OPENING TRIM
2 - HEADLINER

QUARTER TRIM PANEL

REMOVAL

(1) Move rear seat to cargo position.
(2) If equipped, remove sunshade cover.
(3) Open liftgate.
(4) Remove upper and lower liftgate opening trim panels (Refer to 23 - BODY/INTERIOR/LIFTGATE OPENING UPPER TRIM - REMOVAL).
(5) Remove D-pillar upper trim (Refer to 23 - BODY/INTERIOR/D-PILLAR TRIM - REMOVAL).
(6) Remove storage bin (right side only) (Refer to 23 - BODY/INTERIOR/REAR STORAGE BOX - REMOVAL).
(7) Remove C-pillar upper trim panel (Refer to 23 - BODY/INTERIOR/C-PILLAR TRIM - REMOVAL).
(8) Remove mounting screws.
(9) Pull quarter trim panel forward and disengage connectors for CD player and power outlet, if equipped.
(10) Pull quarter trim panel extension in the rear door opening upward.
(11) Remove rear quarter trim panel.

INSTALLATION

(1) Position quarter trim panel, engage connectors for CD player and power outlet, if equipped, and align screw holes.
(2) Install quarter trim panel.
(3) Install C-pillar upper trim panel (Refer to 23 - BODY/INTERIOR/C-PILLAR TRIM - INSTALLATION).
(4) Install storage bin (Refer to 23 - BODY/INTERIOR/REAR STORAGE BOX - INSTALLATION).
(5) Install D-pillar upper trim panel (Refer to 23 - BODY/INTERIOR/D-PILLAR TRIM - INSTALLATION).
(6) Install upper and lower liftgate opening trim panels (Refer to 23 - BODY/INTERIOR/LIFTGATE OPENING UPPER TRIM - INSTALLATION).
(7) If equipped, install sunshade cover.
(8) Install cargo loops.
(9) Move the rear seat to the upright position.

REAR STORAGE BOX

REMOVAL

(1) Open the storage bin lid and remove screws on each side of the lid hinge.
(2) Pull upward sharply on the bottom of the bin to disengage hooks.
(3) Raise bin and move inboard to disengage the quarter trim panel.

INSTALLATION

(1) Position the bin hooks high in the slots on the quarter trim panel.
(2) Push downward until the bin snaps into place.
(3) Install the hinge screws.

REAR VIEW MIRROR

REMOVAL

(1) If equipped, disconnect mirror harness connector.
(2) Loosen the mirror base setscrew (Fig. 14).
(3) Slide the mirror base upward and off the bracket.

INSTALLATION

(1) Position the mirror base at the bracket and slide it downward onto the support bracket (Fig. 14).
(2) Tighten the setscrew 1 N·m (15 in. lbs.) torque.
(3) If equipped, connect mirror harness connector.

INSTALLATION - REARVIEW MIRROR SUPPORT BRACKET

(1) Mark the position for the mirror bracket on the outside of the windshield glass with a wax pencil.
(2) Clean the bracket contact area on the glass. Use a mild powdered cleanser on a cloth saturated with isopropyl (rubbing) alcohol. Finally, clean the glass with a paper towel dampened with alcohol.
(3) Sand the surface on the support bracket with fine grit-sandpaper. Wipe the bracket surface clean with a paper towel.

REAR VIEW MIRROR (Continued)

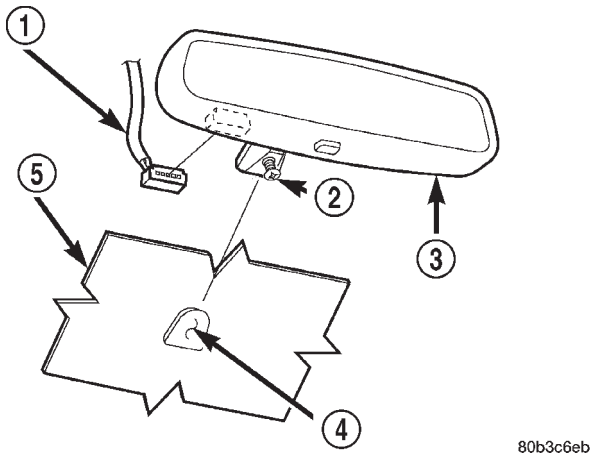

Fig. 14 Rearview Mirror

1 - CONNECTOR
2 - SCREW
3 - ELECTROCHROMATIC REAR VIEW MIRROR
4 - SUPPORT BUTTON
5 - WINDSHIELD

(4) Apply accelerator to the surface on the bracket according to the following instructions:

(a) Crush the vial to saturate the felt applicator.

(b) Remove the paper sleeve.

(c) Apply accelerator to the contact surface on the bracket.

(d) Allow the accelerator to dry for five minutes.

(e) Do not touch the bracket contact surface after the accelerator has been applied.

(5) Apply adhesive accelerator to the bracket contact surface on the windshield glass. Allow the accelerator to dry for one minute. Do not touch the glass contact surface after the accelerator has been applied.

(6) Install the bracket according to the following instructions:

(a) Apply one drop of adhesive at the center of the bracket contact-surface on the windshield glass.

(b) Apply an even coat of adhesive to the contact surface on the bracket.

(c) Align the bracket with the marked position on the windshield glass.

(d) Press and hold the bracket in place for at least one minute.

NOTE: Verify that the mirror support bracket is correctly aligned, because the adhesive will cure rapidly.

(7) Allow the adhesive to cure for 8-10 minutes. Remove any excess adhesive with an alcohol-dampened cloth.

(8) Allow the adhesive to cure for an additional 8-10 minutes before installing the mirror.

SUN VISOR

REMOVAL

(1) Remove screws attaching sunvisor arm support bracket to headliner and roof panel.

(2) Disengage electrical connections for vanity mirror, if equipped.

(3) Detach sunvisor from support bracket.

(4) Remove sunvisor from vehicle.

(5) Remove retaining screw and support bracket.

INSTALLATION

(1) Install the retaining screw and support bracket.

(2) Position the sunvisor in the vehicle.

(3) Connect the electrical harness for the lighted vanity mirror, if equipped.

(4) Attach the sunvisor to the support bracket.

(5) Install the support bracket w/sunvisor onto the headliner and roof panel.

PAINT

TABLE OF CONTENTS

page

PAINT
SPECIFICATIONS. 170
BASE COAT/CLEAR COAT FINISH
DESCRIPTION 170
PAINT CODE
DESCRIPTION 170
PAINT TOUCH-UP
DESCRIPTION 170
WET SANDING/BUFFING & POLISHING
DESCRIPTION 171

PAINT

SPECIFICATIONS

2001 WJ PAINT COLOR CODES

EXTERIOR COLORS

DC CODE	EXTERIOR COLOR	DC CODE	EXTERIOR COLOR
DX8	Black Clear Coat	YUB	Woodland Brown Pearl Coat
PR4	Flame Red Clear Coat	WUL	Sienna Tinted Pearl Coat
XRG	Shale Green Metallic Clear Coat	WTH	Champagne Pearl Coat
XBQ	Steel Blue Pearl Coat	XS5	Silverstone Pearl Coat
WBT	Patriot Blue Pearl Coat	SW1	Stone White Clear Coat

INTERIOR COLORS

DC CODE	INTERIOR COLOR	DC CODE	INTERIOR COLOR
AZ	Agate	T5	Sandstone
L5	Taupe		

BASE COAT/CLEAR COAT FINISH

DESCRIPTION

The original equipment finish is a multi-step process that involves cleaning, electrodeposition (e-coat), base coat, and clear coat steps. Additionally, selected areas of the vehicle may be coated with an anti-chip finish.

PAINT CODE

DESCRIPTION

Exterior vehicle body colors are identified on the Body Code plate. The plate is located on the in the engine compartment and attached to the top of the right frame rail. Refer to the Introduction section at the front of this manual for body code plate description. The paint code is also identified on the Vehicle Safety Certification Label which is located on the drivers door shut face. The first digit of the paint code listed on the vehicle indicates the sequence of application, i.e.: P = primary coat, Q = secondary coat.

PAINT TOUCH-UP

DESCRIPTION

When a painted metal surface has been scratched or chipped, it should be touched-up as soon as possible to avoid corrosion. For best results, use Mopar® Scratch Filler/Primer, Touch-Up Paints and Clear Top Coat. Refer to Introduction group of this manual for Body Code Plate information.

WARNING:
USE A OSHA APPROVED BREATHING FILTER WHEN SPRAYING PAINT OR SOLVENTS IN A CONFINED AREA. PERSONAL INJURY CAN RESULT.

PAINT TOUCH-UP (Continued)

OPERATION

(1) Scrape loose paint and corrosion from inside scratch or chip.

(2) Clean affected area with Mopar® Tar/Road Oil Remover, and allow to dry.

(3) Fill the inside of the scratch or chip with a coat of filler/primer. Do not overlap primer onto good surface finish. The applicator brush should be wet enough to puddle-fill the defect without running. Do not stroke brush applicator on body surface. Allow the filler/primer to dry hard.

(4) Cover the filler/primer with color touch-up paint. Do not overlap touch-up color onto the original color coat around the scratch or chip. Butt the new color to the original color, if possible. Do not stroke applicator brush on body surface. Allow touch-up paint to dry hard.

(5) On vehicles without clear coat, the touch-up color can be lightly finesse sanded (1500 grit) and polished with rubbing compound.

(6) On vehicles with clear coat, apply clear top coat to touch-up paint with the same technique as described in Step 4. Allow clear top coat to dry hard. If desired, Step 5 can be performed on clear top coat.

WARNING:
AVOID PROLONGED SKIN CONTACT WITH PETROLEUM OR ALCOHOL – BASED CLEANING SOLVENTS. PERSONAL INJURY CAN RESULT.
AVOID PROLONGED SKIN CONTACT WITH PETROLEUM OR ALCOHOL – BASED CLEANING SOLVENTS. PERSONAL INJURY CAN RESULT.

WET SANDING/BUFFING & POLISHING

DESCRIPTION

Minor acid etching, orange peel, or smudging in clear coat or single-stage finishes can be reduced with light finesse sanding, hand buffing, and polishing. **If the finish has been finesse sanded in the past, it cannot be repeated. Finesse sanding operation should be performed by a trained automotive paint technician.**

CAUTION: Do not remove clear coat finish, if equipped. Base coat paint must retain clear coat for durability.

SEATS

TABLE OF CONTENTS

page

SEATS
DESCRIPTION 172
OPERATION. 172
FRONT HEADREST
REMOVAL 172
INSTALLATION. 173
FRONT HEADREST SLEEVE
REMOVAL 173
INSTALLATION. 173
FRONT SEAT
REMOVAL 174
INSTALLATION. 174
FRONT SEAT BACK
REMOVAL 174
INSTALLATION. 174
FRONT SEAT BACK COVER
REMOVAL 175
INSTALLATION. 175
FRONT SEAT CUSHION
REMOVAL 175
INSTALLATION. 175
FRONT SEAT SIDE SHIELD
REMOVAL 176
INSTALLATION. 176
SEAT TRACK & RECLINER ASSEMBLY
REMOVAL 176
INSTALLATION. 176
SEAT TRACK ADJUSTER
REMOVAL 176
INSTALLATION. 176
REAR HEADREST
REMOVAL 177
INSTALLATION. 177
REAR HEADREST RELEASE KNOB
REMOVAL 177
INSTALLATION. 177
REAR HEADREST FOLDING MECHANISM
REMOVAL 178
INSTALLATION. 178
REAR HEADREST SLEEVE
REMOVAL 178
INSTALLATION. 178
REAR SEAT BACK
REMOVAL 178
INSTALLATION. 178
REAR SEAT BACK COVER
REMOVAL 179
INSTALLATION. 179
REAR SEAT CUSHION
REMOVAL 179
INSTALLATION. 179
REAR SEAT CUSHION COVER
REMOVAL 180
INSTALLATION. 180
FOLDING REAR SEAT BACK LATCH / LOCK
REMOVAL 180
INSTALLATION. 180
FOLDING REAR SEAT BACK LATCH HANDLE
REMOVAL 180
INSTALLATION. 180
FOLDING REAR SEAT BACK LATCH/HINGE
REMOVAL 181
INSTALLATION. 181

SEATS

DESCRIPTION

Seat modules are made up of a seat frame, seat cushion, seat back cushion, a covering material, and the electrical components used for power operation, if equipped. Some seat systems also contain seat belt components and supplemental restraint systems.

OPERATION

Seat assemblies transport the occupants in comfort and safety. Seat assemblies also help position occupants correctly in the event of airbag deployment. Seat cushions, coverings, and electrical components are serviceable. Refer to the appropriate group in this manual.

FRONT HEADREST

REMOVAL

(1) Depress head restraint release button and lift head restraint to full up position.

(2) Using a small flat blade, depress tab on right side head restraint release button and using your hand, simultaneously press tab on left side head restraint release button (Fig. 1) and pull head restraint up to separate from seat back.

FRONT HEADREST (Continued)

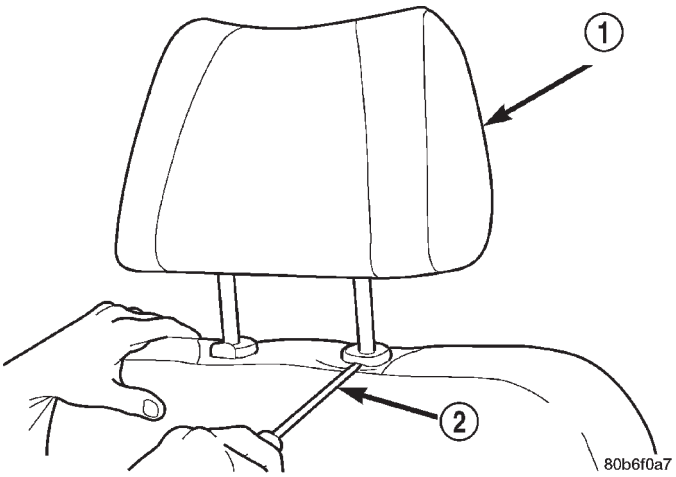

Fig. 1 Head Restraint

1 - HEAD RESTRAINT
2 - FLAT BLADE

INSTALLATION

(1) Position head restraint in seat back, press tab on left side head restraint release button and push down head restraint to secure.

FRONT HEADREST SLEEVE

REMOVAL

(1) Remove head restraint (Refer to 23 - BODY/SEATS/FRONT HEADREST - REMOVAL).

(2) Remove seat back cover (Refer to 23 - BODY/SEATS/FRONT SEAT BACK COVER - REMOVAL).

(3) Remove hog rings attaching cushion pad to seat back frame (Fig. 2).

(4) Remove cushion pad from seat back frame.

(5) Rotate head restraint sleeve 1/4 turn counter-clockwise to release retaining tab.

(6) Pull sleeve from seat back frame (Fig. 3).

INSTALLATION

(1) Position sleeve in seat back frame.

(2) Rotate head restraint sleeve 1/4 turn clockwise to engage retaining tab.

(3) Install cushion pad onto seat back frame.

(4) Install hog rings attaching cushion pad to seat back frame.

(5) Install seat back cover (Refer to 23 - BODY/SEATS/FRONT SEAT BACK COVER - INSTALLATION).

(6) Install head restraint (Refer to 23 - BODY/SEATS/FRONT HEADREST - INSTALLATION).

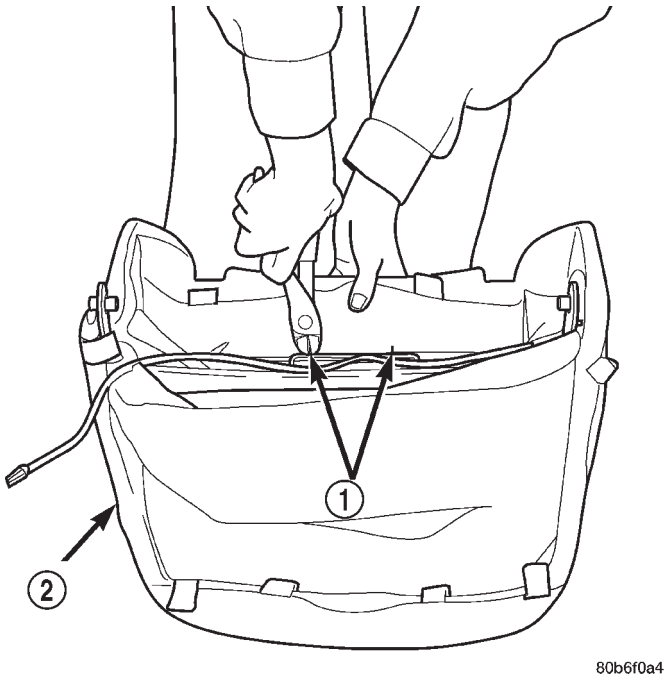

Fig. 2 Cushion Pad

1 - HOG RING
2 - SEAT BACK CUSHION PAD

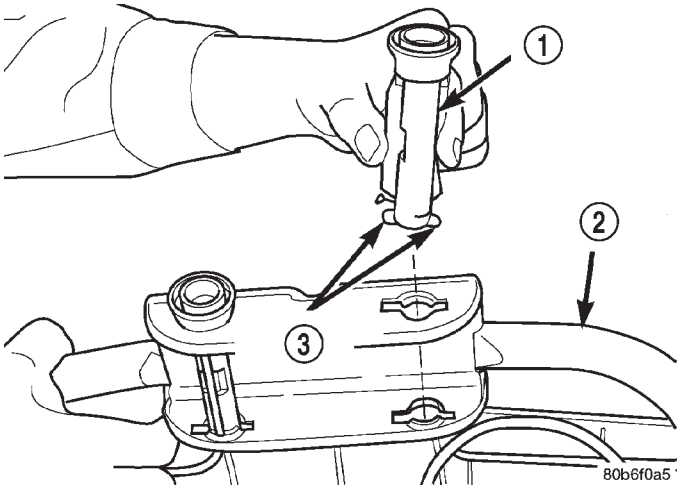

Fig. 3 Head Restraint Sleeve

1 - HEAD RESTRAINT SLEEVE
2 - SEAT BACK FRAME
3 - RETAINING TAB

FRONT SEAT

REMOVAL

(1) Move seat to full rearward position.
(2) Remove front bolts attaching seat to floor pan (Fig. 4).
(3) Move seat to full forward position.
(4) Using a trim stick, pry cover from seat track (power seat only).
(5) Remove rear bolts attaching seat to floor pan.
(6) If equipped, disconnect power seat wire harness connector.
(7) Remove seat from vehicle.

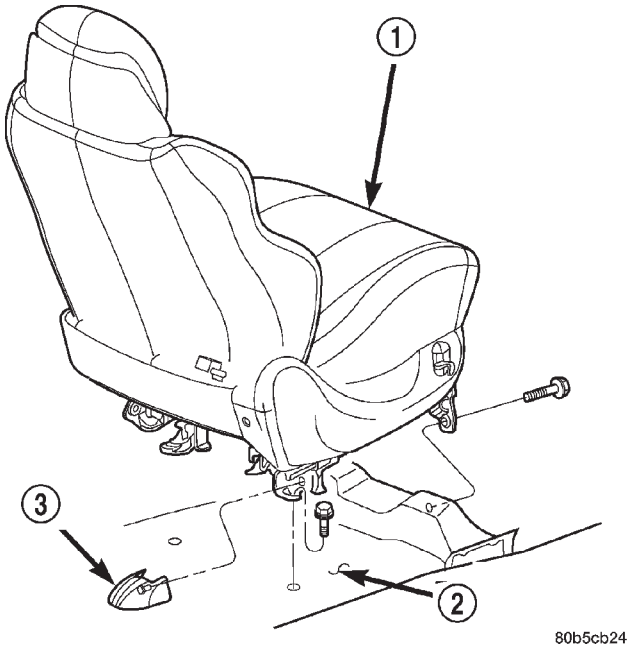

Fig. 4 Front Bucket Seat

1 - POWER BUCKET SEAT
2 - FLOOR PAN
3 - SEAT TRACK COVER

INSTALLATION

(1) Position seat on floor pan.
(2) If equipped, connect power seat wire harness connector.
(3) Install rear bolts attaching seat to floor pan. Tighten bolts to 40 N·m (30 ft. lbs.) torque.
(4) If equipped, install cover on seat track.
(5) Move seat to full rearward position.
(6) Install front bolts attaching seat to floor pan. Tighten bolts to 40 N·m (30 ft. lbs.) torque.

FRONT SEAT BACK

REMOVAL

(1) Move seat to full rearward position.
(2) Remove inboard bolt attaching seat back frame to seat cushion frame.
(3) Move seat to full forward position.
(4) Move seat back to full recline position.
(5) Remove screws attaching seat side shield to seat frame.
(6) Disconnect wire harness connector from recliner motor, if equipped.
(7) From the underside of the seat, disconnect the wire harness connector for the power lumber and/or heated seat, if equipped.
(8) Remove outboard bolts attaching recliner to seat cushion frame.
(9) Route the power lumber and/or heated seat harness through the seat cushion cover, if equipped.
(10) Separate seat back from seat cushion.

INSTALLATION

(1) Position seat back on seat cushion.
(2) Route the power lumber and heater harness through the seat cushion cover, if equipped.
(3) Install recliner bolts attaching seat back frame to seat cushion frame. Tighten bolts to 28 N·m (20 ft. lbs.) torque.
(4) Install the inboard bolt attaching seat back frame to seat cushion frame. Tighten bolt to 47N·m (35 ft.lbs.).
(5) Connect wire harness connector to recliner motor and/or heated seat, if equipped.
(6) From the underside of the seat, connect the power lumber and/or heated seat wire harness connector to the seat harness, if equipped.
(7) Install screws attaching seat side shield to seat frame.

FRONT SEAT BACK COVER

REMOVAL

(1) Remove head restraint (Refer to 23 - BODY/SEATS/FRONT HEADREST - REMOVAL).

(2) Using a trim stick, carefully pry head restraint release button caps from the top of seat back.

(3) Remove seat back (Refer to 23 - BODY/SEATS/FRONT SEAT BACK - REMOVAL).

(4) Disengage J-strap at base of seat back.

(5) Slide hand between the face of the seat back pad and the cushion cover and carefully separate hook and loop fastener (Fig. 5).

(6) Roll cover upward and disengage hog rings.

(7) Roll cover upward to top of seat back.

(8) Separate cover from seat back.

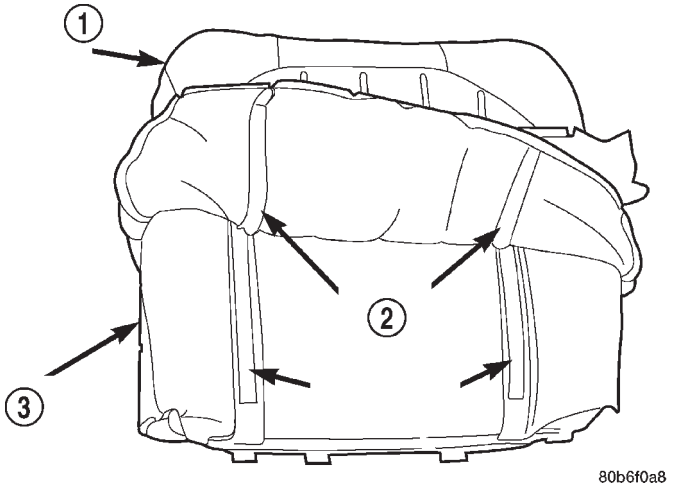

Fig. 5 Seat Back Cover

1 - SEAT BACK COVER
2 - HOOK AND LOOP FASTENER
3 - SEAT BACK PAD

INSTALLATION

(1) Position cover inside-out at the top of seat back.

(2) Roll cover downward.

(3) Engage hog rings.

(4) Align seat back cover with hook and loop fasteners and secure.

(5) Roll cover downward.

(6) Engage J-strap at base of seat back.

(7) Install seat back (Refer to 23 - BODY/SEATS/FRONT SEAT BACK - INSTALLATION).

NOTE: The taller head restraint release button cap is positioned on the left hand side and the head restraint button cap with the hidden button is positioned on the right hand side.

(8) Position head restraint release button caps on head restraint sleeves and press to secure.

(9) Install head restraint (Refer to 23 - BODY/SEATS/FRONT HEADREST - INSTALLATION).

FRONT SEAT CUSHION

REMOVAL

(1) Remove seat from vehicle (Refer to 23 - BODY/SEATS/FRONT SEAT - REMOVAL).

(2) Remove seat back (Refer to 23 - BODY/SEATS/FRONT SEAT BACK - REMOVAL).

(3) Disengage J-straps attaching cushion cover to seat cushion frame.

(4) Disengage hog rings attaching cushion cover to cushion frame at rear of seat along bottom of cushion cover (Fig. 6).

(5) Roll up edges of cover and route seat function switches through access hole on outboard side of seat cushion, if equipped.

(6) Disengage seat cushion heater element connector, if equipped.

(7) Disengage hog rings attaching cover to cushion along cover insert.

(8) Separate seat cushion cover from seat cushion.

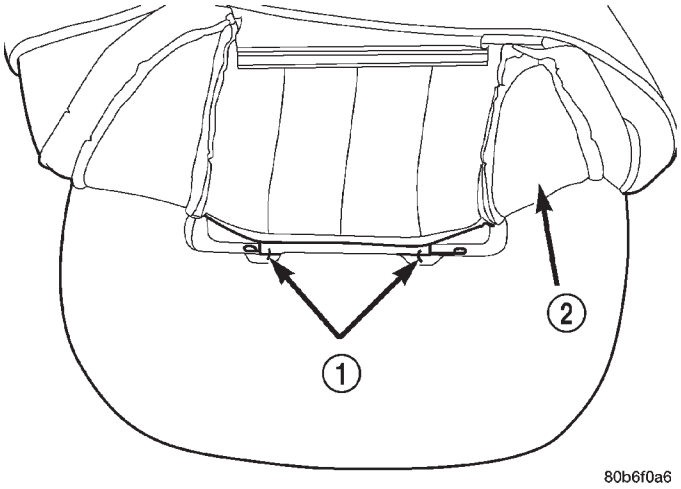

Fig. 6 Seat Cushion Cover

1 - HOG RING
2 - CUSHION COVER

INSTALLATION

(1) Position seat cover on cushion.

(2) Engage hog rings attaching cushion cover to cushion along insert.

(3) Engage seat cushion heater element connector, if equipped.

(4) Route seat function switches through access hole on outboard side of seat cushion, if equipped.

FRONT SEAT CUSHION (Continued)

(5) Engage J-straps attaching cushion cover to seat cushion frame.

(6) Engage hog rings attaching cushion cover to cushion frame.

(7) Install seat back (Refer to 23 - BODY/SEATS/ FRONT SEAT BACK - INSTALLATION).

(8) Install seat (Refer to 23 - BODY/SEATS/ FRONT SEAT - INSTALLATION).

FRONT SEAT SIDE SHIELD

REMOVAL

(1) Remove screws attaching side shield to seat frame.

(2) Disconnect wire harness connectors from power seat and power lumbar switches, if equipped.

(3) Separate side shield from seat.

INSTALLATION

(1) Position side shield on seat.

(2) Connect wire harness connectors to power seat and power lumbar switches, if equipped.

(3) Install screws attaching side shield to seat frame.

SEAT TRACK & RECLINER ASSEMBLY

REMOVAL

(1) Remove seat back (Refer to 23 - BODY/SEATS/ FRONT SEAT BACK - REMOVAL).

(2) Disengage J-strap at base of seat back.

(3) Roll seat back cover upward to access bolts attaching recliner to seat back frame.

(4) Remove bolts attaching recliner to seat back frame.

(5) Separate recliner from seat back.

INSTALLATION

(1) Position recliner on seat back.

(2) Install bolts attaching recliner to seat back frame. Tighten bolts to 28 N·m (20 ft. lbs.) torque.

(3) Roll seat back cover downward.

(4) Engage J-strap at base of seat back.

(5) Install seat back (Refer to 23 - BODY/SEATS/ FRONT SEAT BACK - INSTALLATION).

SEAT TRACK ADJUSTER

REMOVAL

(1) Remove seat (Refer to 23 - BODY/SEATS/ FRONT SEAT - REMOVAL).

(2) Remove side shield (Refer to 23 - BODY/ SEATS/FRONT SEAT SIDE SHIELD - REMOVAL) .

(3) Remove nuts attaching seat track adjuster to seat cushion frame (Fig. 7) and (Fig. 8). Roll cushion trim cover up to access the two front nuts.

(4) Disengage clips attaching wire harness to adjuster.

(5) Disengage seat memory module connector, if equipped.

(6) Separate seat track from seat cushion frame.

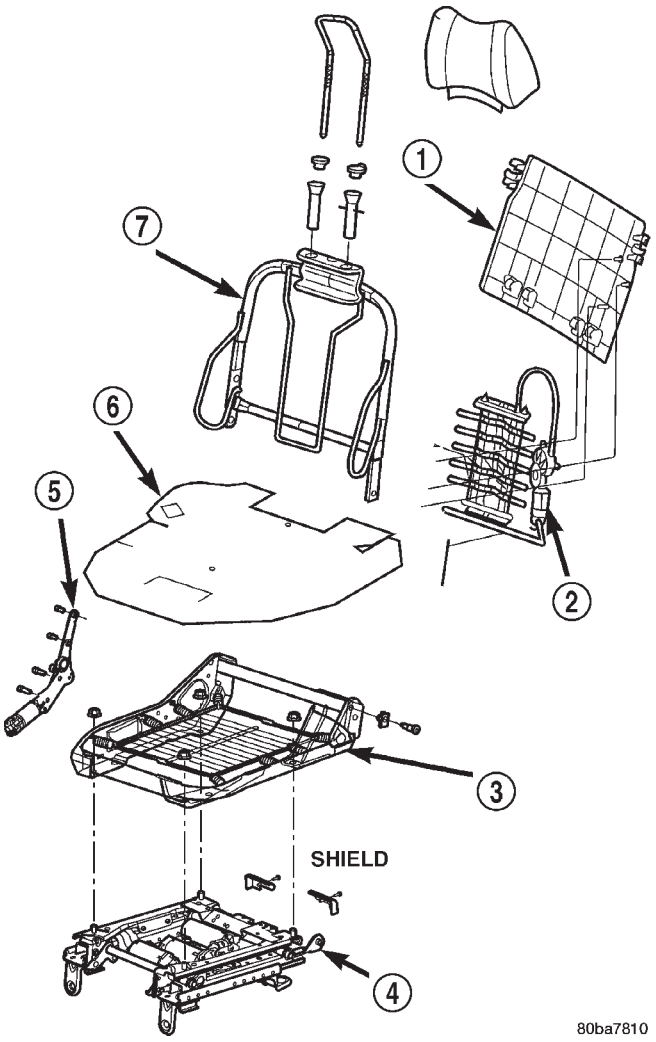

Fig. 7 Seat Track Adjuster—Power

1 - BACK PANEL
2 - LUMBAR ASSEMBLY
3 - SEAT CUSHION FRAME
4 - POWER SEAT TRACK ADJUSTER
5 - POWER RECLINER
6 - SEAT CUSHION PAD
7 - SEAT BACK FRAME

INSTALLATION

(1) Transfer seat memory module, if equipped.

(2) Position seat track on seat cushion frame.

SEAT TRACK ADJUSTER (Continued)

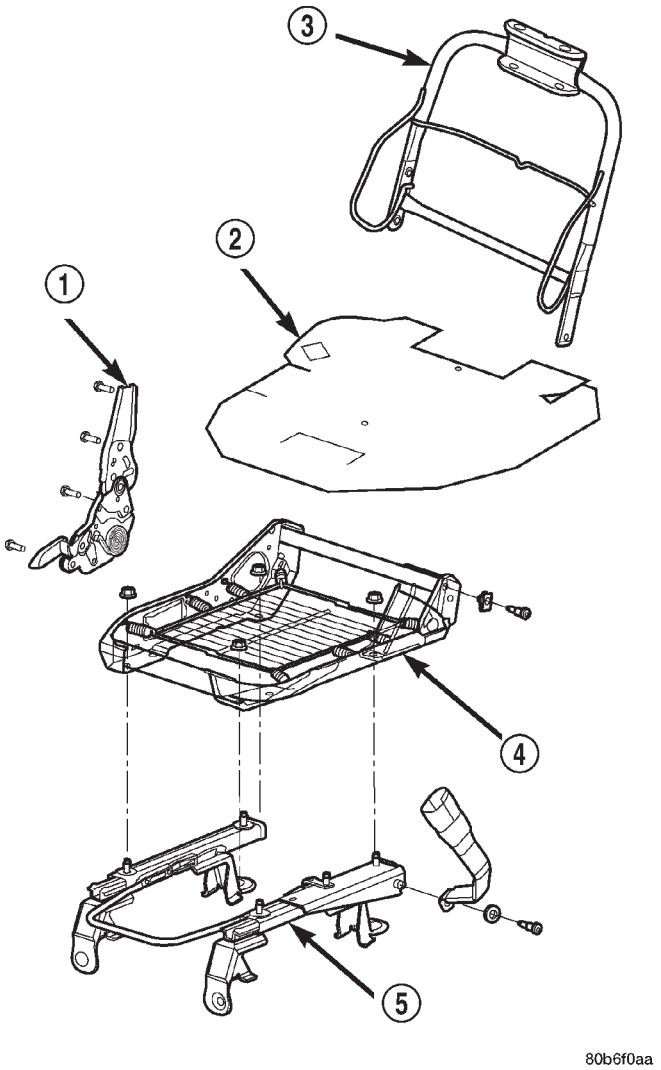

Fig. 8 Seat Track Adjuster — Manual

1 - MANUAL RECLINER
2 - SEAT CUSHION PAD
3 - SEAT BACK FRAME
4 - SEAT CUSHION FRAME
5 - MANUAL SEAT TRACK ADJUSTER

(3) Route harness through frame and engage clips attaching wire harness to adjuster.

(4) Engage seat memory module connector, if equipped.

(5) Install nuts attaching seat track adjuster to seat cushion frame. Tighten nuts to 28 N·m (20 ft. lbs.) torque.

(6) Install the side shield (Refer to 23 - BODY/SEATS/FRONT SEAT SIDE SHIELD - INSTALLATION).

(7) Install seat (Refer to 23 - BODY/SEATS/FRONT SEAT - INSTALLATION).

REAR HEADREST

REMOVAL

(1) Depress head rest release button and lift head rest to full up position.

(2) Using a small flat blade, depress tab on outboard side head rest release button and using your hand, simultaneously press tab on inboard side head rest release button (Fig. 9) and pull head rest up to separate from seat back.

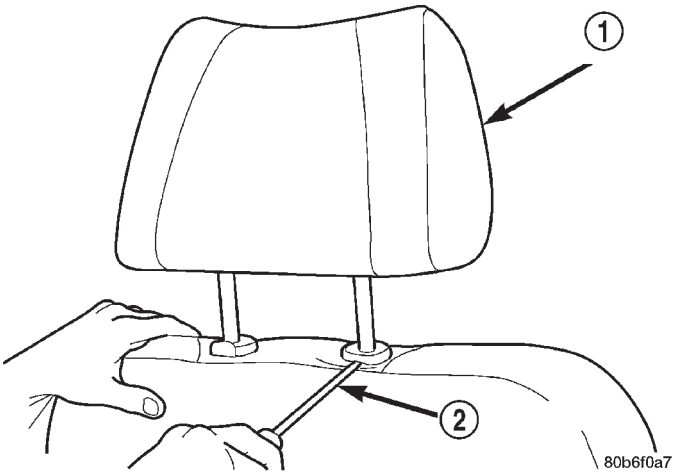

Fig. 9 Head Rest

1 - HEAD RESTRAINT
2 - FLAT BLADE

INSTALLATION

(1) Position head rest in seat back, press tab on inboard side head rest release button cap and push down head restraint to secure.

REAR HEADREST RELEASE KNOB

REMOVAL

(1) Using a razor knife or equivalent, cut the release knob from the release lever.

(2) Pull the release knob from the lever (Fig. 10).

INSTALLATION

(1) Position the release knob on the lever and press to snap in place.

REAR HEADREST FOLDING MECHANISM

REMOVAL

(1) Remove the head rest (Refer to 23 - BODY/SEATS/REAR HEADREST - REMOVAL).

(2) Remove folding mechanism cover (Fig. 10).

(3) Remove the screws that secure the head rest bun to the folding mechanism.

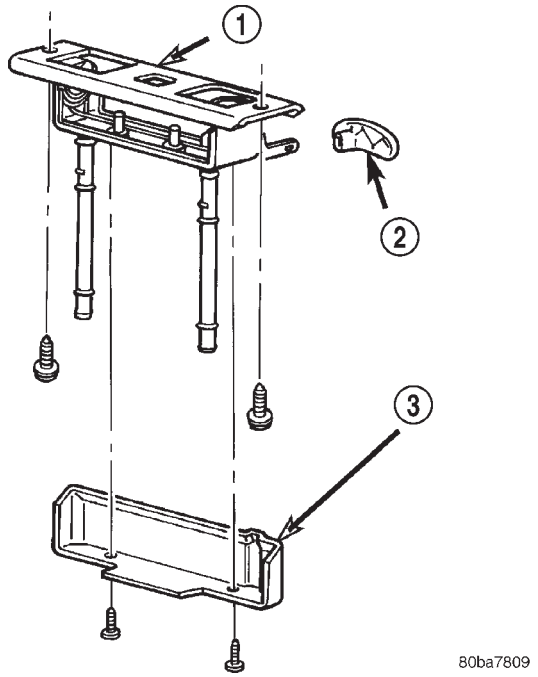

Fig. 10 Rear Seat Head Rest Folding Mechanism

1 - REAR SEAT HEAD REST FOLDING MECHANISM
2 - RELEASE KNOB
3 - FOLDING MECHANISM COVER

NOTE: The folding release knob is always located on the outboard side.

INSTALLATION

(1) Position the head rest bun on the folding mechanism and install the screws.

(2) Install the folding mechanism cover.

(3) Install the head restraint (Refer to 23 - BODY/SEATS/REAR HEADREST - INSTALLATION).

REAR HEADREST SLEEVE

REMOVAL

(1) Remove seat back (Refer to 23 - BODY/SEATS/REAR SEAT BACK - REMOVAL).

(2) Remove head rest (Refer to 23 - BODY/SEATS/REAR HEADREST - REMOVAL).

(3) Remove head rest caps.

(4) Remove seat back cover (Refer to 23 - BODY/SEATS/REAR SEAT BACK COVER - REMOVAL).

(5) Rotate head rest sleeve 1/4 turn counter-clockwise to release retaining tab.

(6) Pull sleeve from seat back frame.

INSTALLATION

(1) Position sleeve in seat back frame.

(2) Rotate head rest sleeve 1/4 turn clockwise to engage retaining tab.

(3) Install seat back cover (Refer to 23 - BODY/SEATS/REAR SEAT BACK COVER - INSTALLATION).

(4) Install head rest caps.

NOTE: The head rest cap with the taller button is always on the inboard side of the seat back.

(5) Install the head rest (Refer to 23 - BODY/SEATS/REAR HEADREST - INSTALLATION).

NOTE: The folding head rest release knob is always on the outboard side.

(6) Install the seat back (Refer to 23 - BODY/SEATS/REAR SEAT BACK - INSTALLATION).

REAR SEAT BACK

REMOVAL

(1) Move rear seat cushions to forward cargo position.

(2) Remove bolts attaching seatback side support bracket to floor pan (right side) (Fig. 11).

(3) Tilt seatback forward, and slide it outboard to detach it from pin on center pivot bracket.

(4) Remove right side (60%) seatback from vehicle.

(5) Remove bolts attaching seatback side support bracket and center pivot bracket to floor pan (left side).

(6) Remove left side (40%) seatback from vehicle.

INSTALLATION

(1) Position left side (40%) seatback in vehicle.

(2) Position left side support bracket and center pivot bracket with bolt holes aligned and install bolts. Tighten bolts to 28 N·m (20 ft. lbs.) torque.

(3) Position right side (60%) seatback in vehicle.

(4) Install seatback onto center pivot bracket pin. Ensure seat back is properly engaged on the center pivot pin.

(5) Position right side support bracket with bolt holes aligned and install bolts. Tighten bolts to 28 N·m (20 ft. lbs.) torque.

(6) Return seat cushions to seating position.

REAR SEAT BACK (Continued)

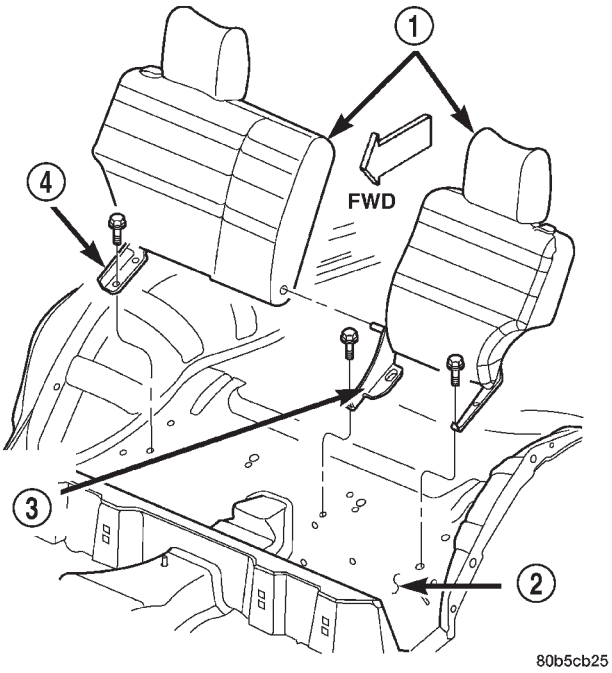

Fig. 11 Rear Seat Back

1 - SEAT BACK
2 - FLOOR PAN
3 - CENTER PIVOT BRACKET
4 - SIDE SUPPORT BRACKET

REAR SEAT BACK COVER

REMOVAL

(1) Remove seat back (Refer to 23 - BODY/SEATS/REAR SEAT BACK - REMOVAL).

(2) Remove head restraint (Refer to 23 - BODY/SEATS/REAR HEADREST - REMOVAL).

(3) Remove head restraint caps.

(4) Disengage J-straps on outboard side of seat back.

(5) Disengage J-straps at base of seat back.

(6) Remove screws attaching latch release handle to seat back frame.

(7) Roll seat back cover upward.

(8) Disengage hook and loop fasteners attaching seat back cover to seat back pad (Fig. 12).

(9) Roll seat back cover upward and route latch release handle through seat back cover.

(10) Separate seat back cover from seat back.

(11) Separate seat back pad from seat back frame.

INSTALLATION

(1) Position seat back cover and pad on seat back frame.

(2) Route latch release handle through seat back cover.

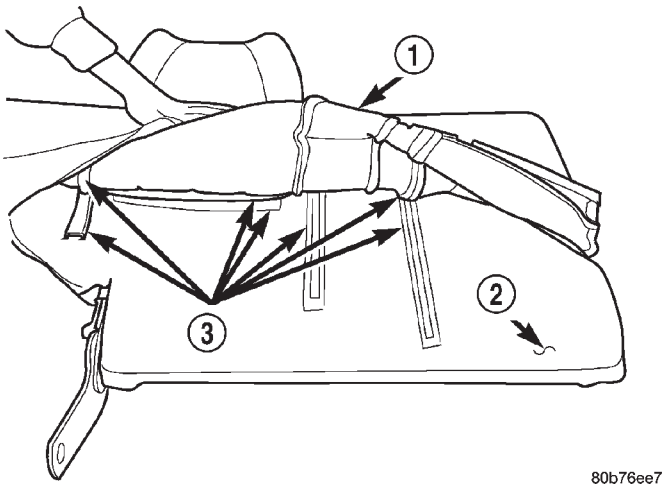

Fig. 12 Rear Seat Back Cover

1 - SEAT BACK COVER
2 - SEAT BACK PAD
3 - HOOK AND LOOP FASTENER

(3) Roll seat back cover partially downward aligning holes in seat back cover for head restraint and latch release handle.

(4) Roll seat back cover downward align and engage hook and loop fasteners to seat back pad.

(5) Engage J-straps at base of seat back.

(6) Engage J-straps on outboard side of seat back.

(7) Install screws attaching latch release handle to seat back frame.

(8) Install head restraint (Refer to 23 - BODY/SEATS/REAR HEADREST - INSTALLATION).

(9) Install seat back (Refer to 23 - BODY/SEATS/REAR SEAT BACK - INSTALLATION).

REAR SEAT CUSHION

REMOVAL

(1) Disengage seat cushion at rear by pulling upward on release strap.

(2) Remove bolts attaching seat cushion to floor pan (Fig. 13).

(3) Remove seat cushion from vehicle.

INSTALLATION

(1) Position seat cushion in vehicle.

(2) Install bolts attaching seat cushion to floor pan. Tighten bolts to 11 N·m (8 ft. lbs.) torque.

(3) Lock seat cushion down by pressing firmly on center of cushion until latch engages.

REAR SEAT CUSHION (Continued)

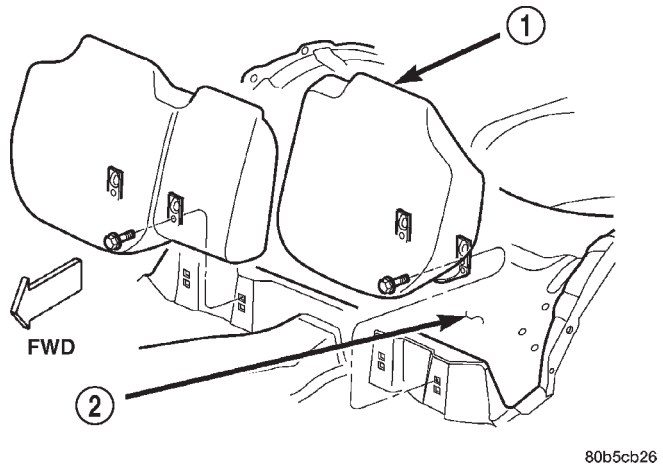

Fig. 13 Rear Seat Cushion

1 - SEAT CUSHION
2 - FLOOR PAN

REAR SEAT CUSHION COVER

REMOVAL

(1) Remove rear seat cushion (Refer to 23 - BODY/SEATS/REAR SEAT CUSHION - REMOVAL).

(2) From the underside of the seat, disengage J-straps attaching cover to seat cushion base panel.

(3) Remove push-in fasteners attaching cushion cover to seat cushion base panel (Fig. 14).

(4) Roll back cover.

(5) Disengage hog rings attaching cushion cover to seat cushion foam pad.

(6) Separate cushion cover from seat cushion foam pad.

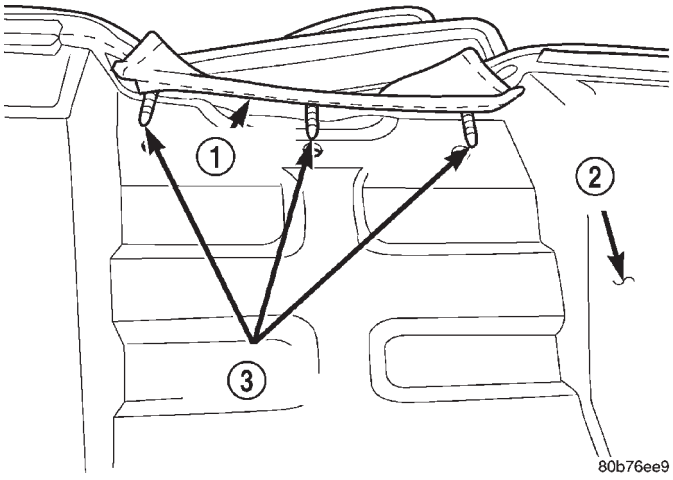

Fig. 14 Push-in Fasteners

1 - CUSHION COVER
2 - SEAT CUSHION BASE PANEL
3 - PUSH-IN FASTENER

INSTALLATION

(1) Position cushion cover on seat cushion foam pad.

(2) Engage hog rings attaching cushion cover to seat cushion foam pad.

(3) Align cushion cover and engage J-straps attaching cushion cover to seat cushion base panel.

(4) Install push-in fasteners attaching cushion cover to seat cushion base panel.

(5) Install rear seat cushion (Refer to 23 - BODY/SEATS/REAR SEAT CUSHION - INSTALLATION).

FOLDING REAR SEAT BACK LATCH / LOCK

REMOVAL

(1) Unlatch seat and pivot seat upward.

(2) Disengage J-strap at seat cushion base panel.

(3) Roll back cushion cover.

(4) Remove screws attaching latch to base panel.

(5) Separate latch from base panel.

INSTALLATION

(1) Position latch on base panel.

(2) Install screws attaching latch to base panel. Tighten screws to 8 N·m (75 in. lbs.) torque.

(3) Route the cushion release strap from the loop on the latch through the slot in the trim cover.

(4) Engage J-strap at seat cushion base panel.

(5) latch seat.

FOLDING REAR SEAT BACK LATCH HANDLE

REMOVAL

(1) Pull handle to release latch.

(2) Remove screws attaching release handle to seat back frame.

(3) Using a small flat blade, disengage retainers securing latch release cable housing to latch release handle.

(4) Rotate cable end until barrel end aligns with key hole slot in latch release handle.

(5) Disengage cable barrel end from release handle.

(6) Separate latch release handle from seat back (Fig. 15).

INSTALLATION

(1) Route cable end into latch release handle.

(2) Rotate cable end until barrel end aligns with key hole slot in latch release handle and insert into handle.

FOLDING RR SEAT BK LATCH HANDLE (Continued)

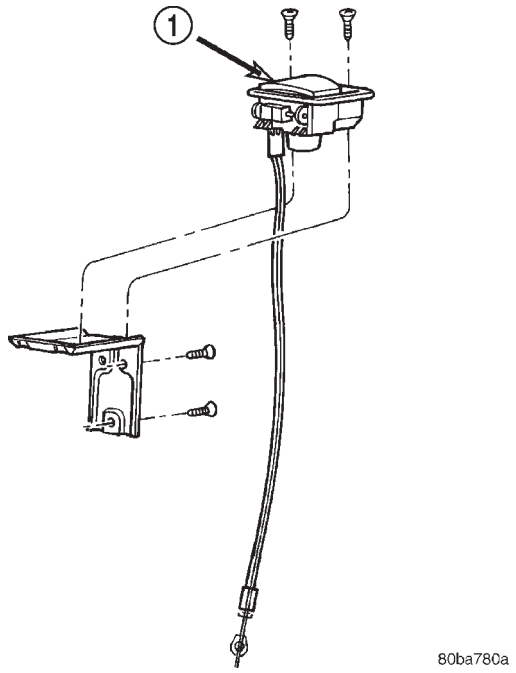

Fig. 15 Rear Seat Release Handle

1 - REAR SEAT FOLDING RELEASE HANDLE

(3) Engage retainers securing latch release cable housing to latch release handle.

(4) Position latch release handle in seat back. Ensure seat back cover is properly aligned.

(5) Install screws attaching release handle to seat back frame.

FOLDING REAR SEAT BACK LATCH/HINGE

REMOVAL

(1) Remove seat back (Refer to 23 - BODY/SEATS/ REAR SEAT BACK - REMOVAL).

(2) Disengage J-straps on outboard side of seat back.

(3) Disengage release cable from latch.

(4) Remove bolts attaching latch/hinge to seat back frame.

(5) Separate latch/hinge from seat back frame.

INSTALLATION

(1) Position latch/hinge on seat back frame.

(2) Install bolts attaching latch/hinge to seat back frame. Tighten bolts to 28 N·m (20 ft. lbs.) torque.

(3) Engage latch release cable.

(4) Engage J-straps on outboard side of seat back.

(5) Install seat back (Refer to 23 - BODY/SEATS/ REAR SEAT BACK - INSTALLATION).

STATIONARY GLASS

TABLE OF CONTENTS

	page
STATIONARY GLASS	
DESCRIPTION	182
OPERATION	182
DOOR GLASS	
REMOVAL	182
INSTALLATION	182
QUARTER WINDOW	
REMOVAL	183
INSTALLATION	183
WINDSHIELD	
DESCRIPTION	183
REMOVAL	184
INSTALLATION	185

STATIONARY GLASS

DESCRIPTION

Windshields and selected stationary glass are structural members of the vehicle. The windshield glass is bonded to the windshield frame with urethane adhesive.

OPERATION

Windshields are made of two pieces of glass with a plastic inner layer. Windshields and other stationary glass protect the occupants from the effects of the elements. Windshields are also used to retain some airbags in position during deployment. Urethane bonded glass is difficult to salvage during removal. The urethane bonding is difficult to cut or clean from any surface. Before removing the glass, check the availability of replacement components.

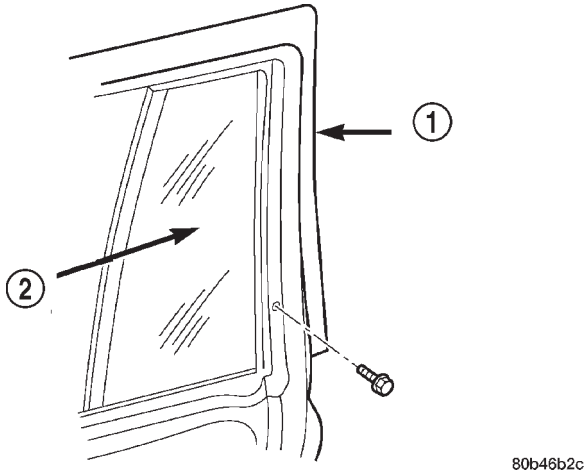

Fig. 1 Stationary Door Glass

1 - DOOR
2 - STATIONARY DOOR GLASS

DOOR GLASS

REMOVAL

(1) Remove door trim panel.
(2) Remove waterdam.
(3) Remove inner belt weatherstrip.
(4) Remove bolt attaching bottom of rear glass run channel to door.
(5) Pull run channel downward and separate from door.
(6) Remove screws attaching stationary door glass frame to door (Fig. 1) and (Fig. 2).
(7) Separate stationary door glass from door.

INSTALLATION

(1) Position stationary door glass in door.
(2) Install screws attaching stationary door glass frame to door.
(3) Install glass run channel.

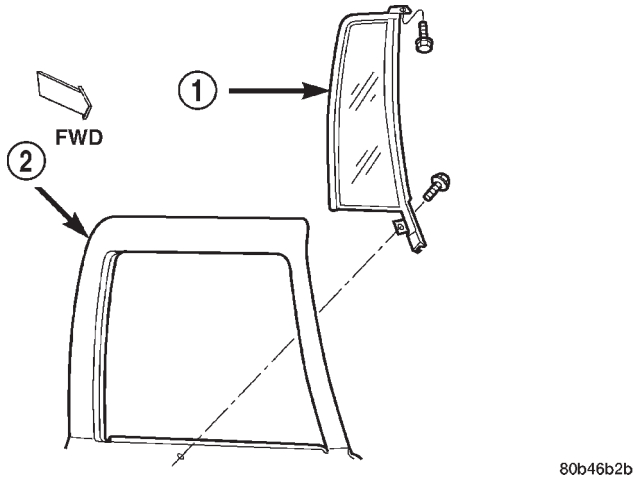

Fig. 2 Stationary Door Glass

1 - STATIONARY DOOR GLASS
2 - DOOR

DOOR GLASS (Continued)

(4) Install inner belt weatherstrip.
(5) Install waterdam.
(6) Install door trim panel.

QUARTER WINDOW

REMOVAL

(1) Cut urethane bonding from around quarter window glass using a suitable sharp cold knife. A pneumatic cutting device can be used if available.
(2) Separate glass from vehicle.

INSTALLATION

CAUTION: Open a window before installing glass. This will avoid pressurizing the passenger compartment. If a door or liftgate is slammed before urethane is cured, water leaks can result.

The window opening fence should be cleaned of old urethane bonding material.
(1) Clean inside of glass with Mopar Glass Cleaner and lint-free cloth.
(2) Apply PVC (vinyl) primer 25 mm (1 in.) wide around edge of glass. Wipe with clean/dry lint-free cloth.
(3) Apply fence primer around edge of fence. Allow at least eighteen minutes drying time.
(4) Apply a 10 mm (0.4 in.) bead of urethane around window vinyl border location.
Position glass into window opening and lock clips into place (Fig. 3).

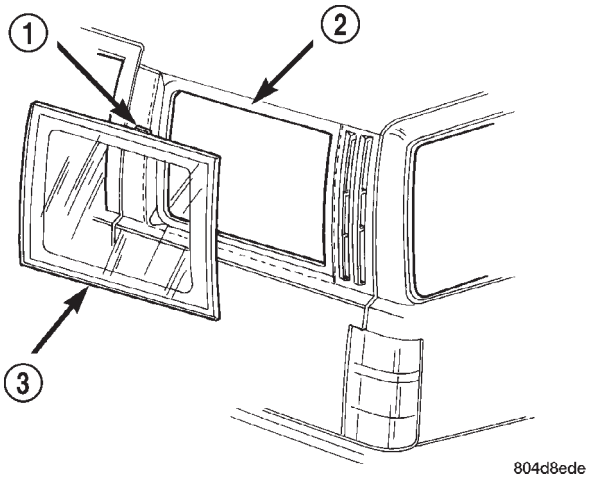

Fig. 3 Quarter Window Glass

1 - CLIP
2 - ROOF PANEL
3 - QUARTER WINDOW GLASS

WINDSHIELD

DESCRIPTION

WARNING: DO NOT OPERATE THE VEHICLE WITHIN 24 HOURS OF WINDSHIELD INSTALLATION. IT TAKES AT LEAST 24 HOURS FOR URETHANE ADHESIVE TO CURE. IF IT IS NOT CURED, THE WINDSHIELD MAY NOT PERFORM PROPERLY IN AN ACCIDENT.
URETHANE ADHESIVES ARE APPLIED AS A SYSTEM. USE GLASS CLEANER, GLASS PREP SOLVENT, GLASS PRIMER, PVC (VINYL) PRIMER AND PINCH WELD (FENCE) PRIMER PROVIDED BY THE ADHESIVE MANUFACTURER. IF NOT, STRUCTURAL INTEGRITY COULD BE COMPROMISED.
DAIMLERCHRYSLER DOES NOT RECOMMEND GLASS ADHESIVE BY BRAND. TECHNICIANS SHOULD REVIEW PRODUCT LABELS AND TECHNICAL DATA SHEETS, AND USE ONLY ADHESIVES THAT THEIR MANUFACTURES WARRANT WILL RESTORE A VEHICLE TO THE REQUIREMENTS OF FMVSS 212. TECHNICIANS SHOULD ALSO INSURE THAT PRIMERS AND CLEANERS ARE COMPATIBLE WITH THE PARTICULAR ADHESIVE USED.
BE SURE TO REFER TO THE URETHANE MANUFACTURER'S DIRECTIONS FOR CURING TIME SPECIFICATIONS, AND DO NOT USE ADHESIVE AFTER ITS EXPIRATION DATE.
VAPORS THAT ARE EMITTED FROM THE URETHANE ADHESIVE OR PRIMER COULD CAUSE PERSONAL INJURY. USE THEM IN A WELL-VENTILATED AREA.
SKIN CONTACT WITH URETHANE ADHESIVE SHOULD BE AVOIDED. PERSONAL INJURY MAY RESULT.
ALWAYS WEAR EYE AND HAND PROTECTION WHEN WORKING WITH GLASS.

CAUTION: Protect all painted and trimmed surfaces from coming in contact with urethane or primers.
Be careful not to damage painted surfaces when removing moldings or cutting urethane around windshield.

OPERATION

The windshield is attached to the window frame with urethane adhesive. The urethane adhesive is applied cold and seals the surface area between the window opening and the glass. The primer adheres the urethane adhesive to the windshield.

WINDSHIELD (Continued)

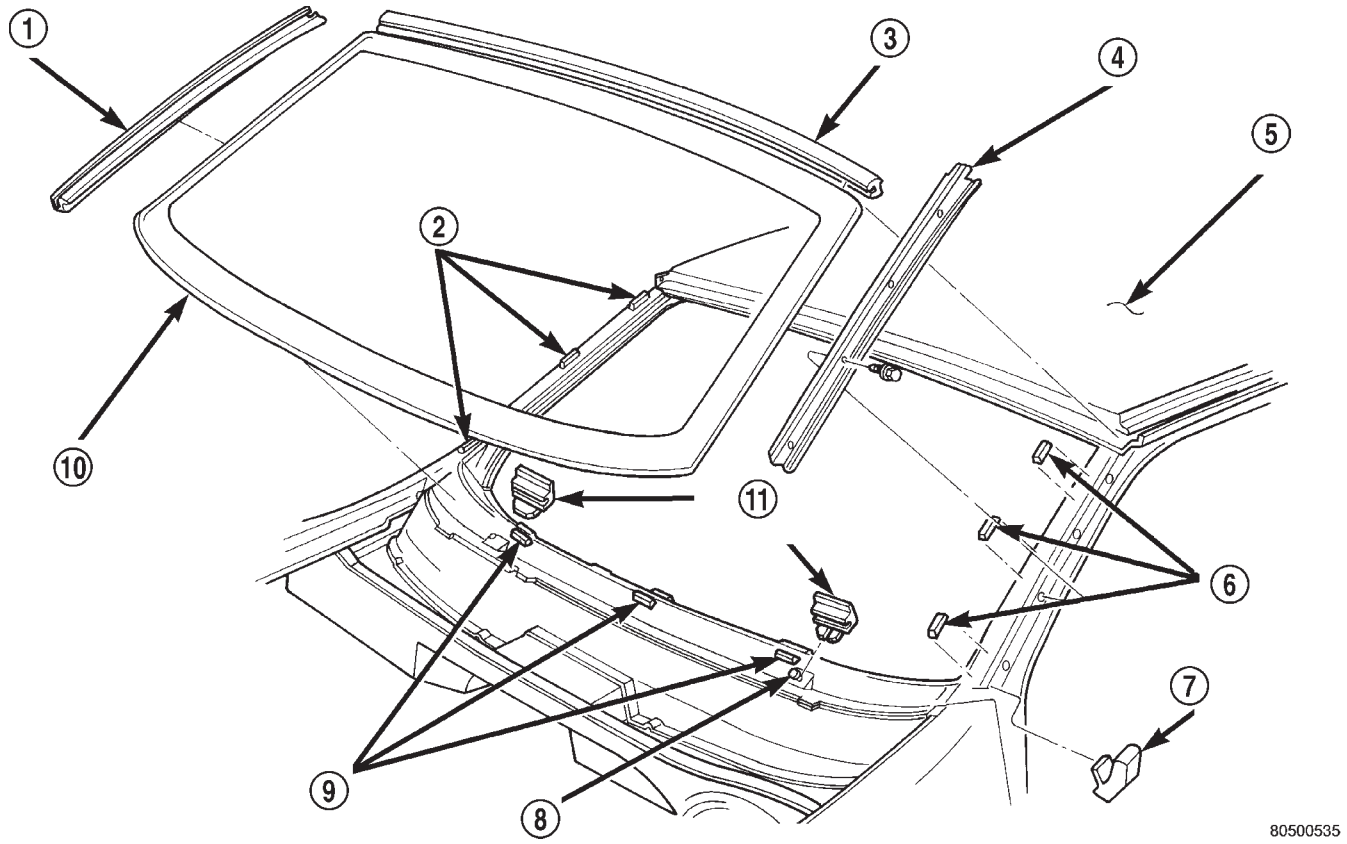

Fig. 4 Windshield

1 - SIDE MOLDING
2 - SUPPORT SPACER
3 - UPPER MOLDING
4 - SIDE MOLDING
5 - ROOF PANEL
6 - SUPPORT SPACER
7 - BLOCKER
8 - STUD
9 - SUPPORT SPACER
10 - WINDSHIELD
11 - ALIGNMENT SPACER

It is difficult to salvage a windshield during the removal operation. The windshield is part of the structural support for the roof. The urethane bonding used to secure the windshield to the fence is difficult to cut or clean from any surface. If the moldings are set in urethane, it would also be unlikely they could be salvaged. Before removing the windshield, check the availability of the windshield and moldings from the parts supplier.

REMOVAL

(1) Remove inside rear view mirror.
(2) Remove cowl cover.
(3) Remove screws attaching windshield side molding to A-pillar (Fig. 4).
(4) Remove upper windshield molding.
(5) Cut urethane bonding from around windshield using a suitable sharp cold knife. A pneumatic cutting device can be used if available (Fig. 5).
(6) Separate windshield from vehicle.

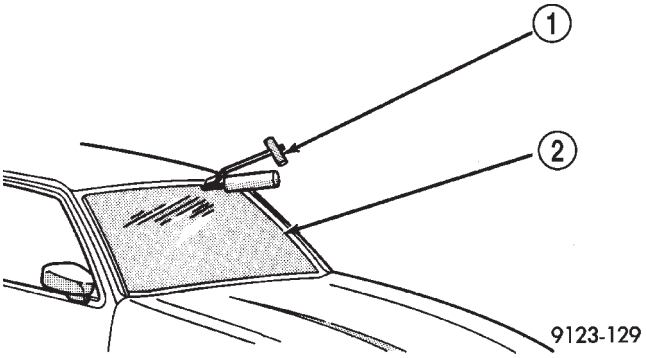

Fig. 5 Cut Urethane Around Windshield—Typical

1 - COLD KNIFE
2 - WINDSHIELD

WINDSHIELD (Continued)

INSTALLATION

WARNING: REVIEW ALL WARNINGS AND CAUTIONS IN THIS GROUP BEFORE PRECEDING WITH INSTALLATION.

CAUTION: Open a window before installing windshield. This will avoid pressurizing the passenger compartment. If a door or liftgate is slammed before urethane is cured, water leaks can result.

The windshield fence should be cleaned of old urethane bonding material. Support spacers should be cleaned and properly installed on weld studs or repair screws at bottom of windshield opening.

(1) Place replacement windshield into windshield opening. Position glass in the center of the opening against the support spacers. Mark the glass at the support spacers with a grease pencil or masking tape and ink pen to use as a reference for installation. Remove replacement windshield from windshield opening (Fig. 6).

(2) Position the windshield inside up on a suitable work surface with two padded, wood 10 cm by 10 cm by 50 cm (4 in. by 4 in. by 20 in.) blocks, placed parallel 75 cm (2.5 ft.) apart (Fig. 7).

(3) Clean inside of windshield with Mopar Glass Cleaner and lint-free cloth.

(4) Apply clear glass primer 25 mm (1 in.) wide around edge of windshield. Wipe with clean/dry lint-free cloth.

(5) Apply black-out primer 15 mm (.75 in.) wide on top and sides of windshield and 25 mm (1 in.) on bottom of windshield. Allow at least three minutes drying time.

(6) Position windshield spacers on lower fence above support spacers at the edge of the windshield opening (Fig. 4).

(7) Apply a 10 mm (0.4 in.) bead of urethane around perimeter of windshield along the inside of the moldings. Apply two beads along the bottom edge.

(8) Install upper molding onto windshield.

(9) Apply fence primer around the perimeter of the windshield opening fence. Allow at least 18 minutes drying time.

(10) With aid of a helper, position windshield over windshield opening. Align reference marks at bottom of windshield to support spacers.

(11) Slowly lower windshield glass to windshield opening fence. Guide top molding into proper position if necessary. Push windshield inward to fence spacers at bottom and until top molding is flush to roof line.

(12) Clean excess urethane from exterior with Mopar Super Clean or equivalent.

(13) Install windshield side moldings.

(14) Install cowl cover and wipers.

(15) Install inside rear view mirror.

(16) After urethane has cured, water test windshield to verify repair.

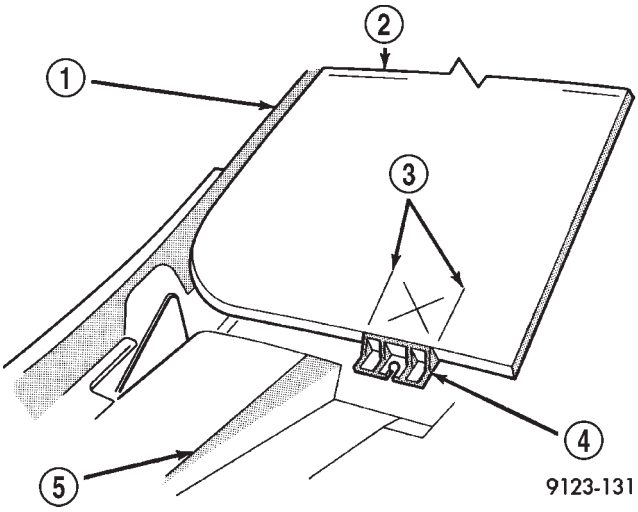

Fig. 6 Center Windshield and Mark at Support Spacers

1 - A-PILLAR
2 - WINDSHIELD
3 - MARKS
4 - SUPPORT SPACER
5 - COWL

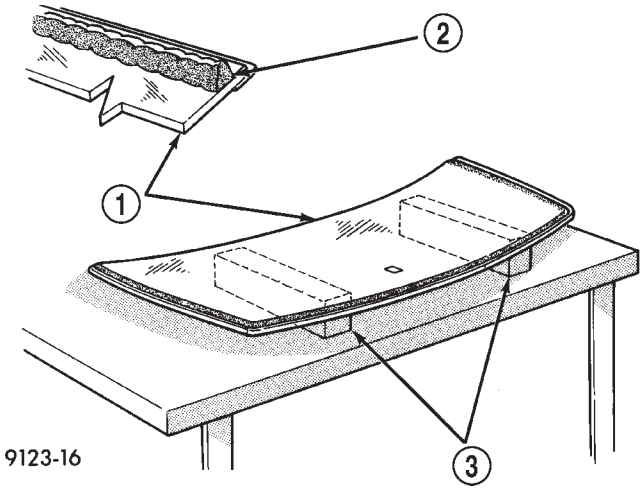

Fig. 7 Work Surface Set up and Molding Installation

1 - WINDSHIELD AND MOULDINGS
2 - URETHANE BEAD AROUND GLASS 7mm (.3 in.) FROM EDGE
3 - BLOCKS

WEATHERSTRIP/SEALS

TABLE OF CONTENTS

page

B-PILLAR DOOR SEAL
REMOVAL 186
INSTALLATION 186
COWL WEATHERSTRIP
REMOVAL 187
INSTALLATION 187
FRONT DOOR GLASS RUN WEATHERSTRIP
REMOVAL 187
INSTALLATION 187
FRONT DOOR INNER BELT WEATHERSTRIP
REMOVAL 187
INSTALLATION 187
FRONT DOOR OUTER BELT WEATHERSTRIP
REMOVAL 188
INSTALLATION 188
FLIP-UP GLASS WEATHERSTRIP
REMOVAL 188
INSTALLATION 188
FRONT DOOR SECOND WEATHERSTRIP
REMOVAL 188
INSTALLATION 188
FRONT DOOR WEATHERSTRIP
REMOVAL 188
INSTALLATION 189
HOOD SEAL
REMOVAL 189
INSTALLATION 189
LIFTGATE OPENING WEATHERSTRIP
REMOVAL 190
INSTALLATION 190
REAR DOOR INNER BELT WEATHERSTRIP
REMOVAL 190
INSTALLATION 190
REAR DOOR OUTER BELT WEATHERSTRIP
REMOVAL 190
INSTALLATION 190
REAR DOOR SECONDARY WEATHERSTRIP
REMOVAL 190
INSTALLATION 191
REAR DOOR WEATHERSTRIP
REMOVAL 191
INSTALLATION 191
ROOF RAIL WEATHERSTRIP / RETAINER
REMOVAL 191
INSTALLATION 191

B-PILLAR DOOR SEAL

REMOVAL

The B-pillar seal is attached to the rear door with adhesive tape.

(1) Peel seal from the door (Fig. 1).

INSTALLATION

(1) Clean contact area with Mopar® Super Kleen or equivalent.

(2) Remove carrier from seal.

(3) Align seal on door and press into place.

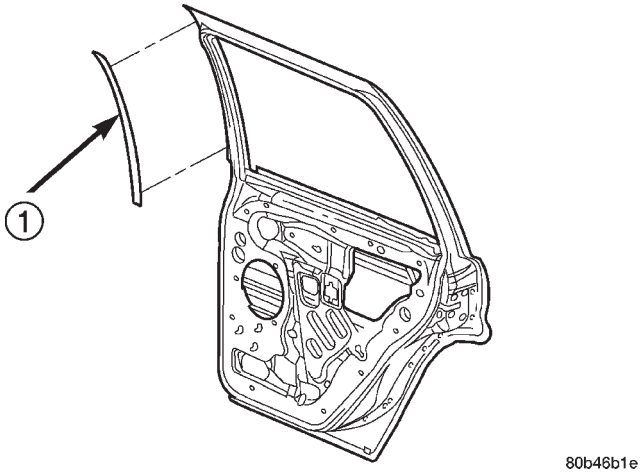

Fig. 1 B-Pillar Seal

1 - B-PILLAR SEAL

B-PILLAR DOOR SEAL (Continued)

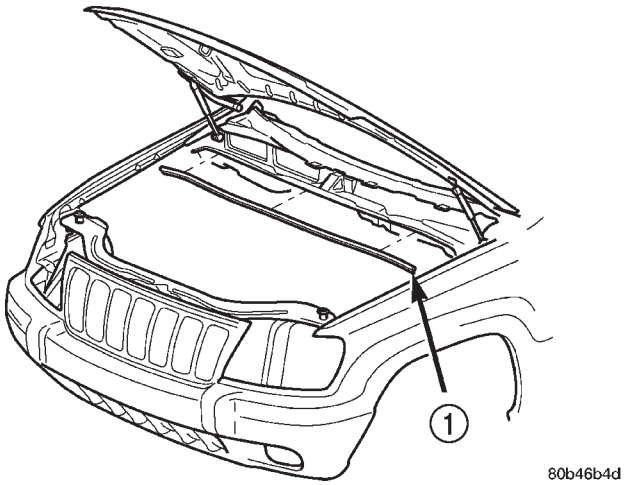

Fig. 2 Cowl Plenum Seal

1 - PLENUM SEAL

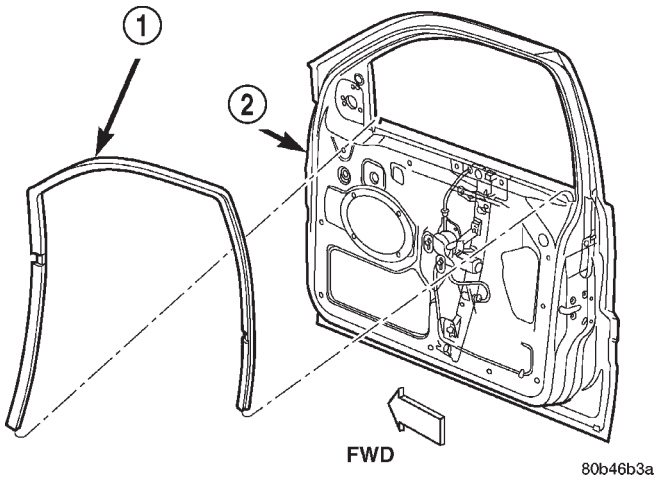

Fig. 3 Front Door Glass Run Channel Weatherstrip

1 - GLASS RUN CHANNEL WEATHERSTRIP
2 - DOOR

COWL WEATHERSTRIP

REMOVAL

(1) Raise hood.
(2) Pull cowl plenum seal from cowl.
(3) Separate cowl plenum seal from cowl (Fig. 2).

INSTALLATION

(1) Position cowl plenum seal on cowl.
(2) Press cowl plenum seal to seat.

FRONT DOOR GLASS RUN WEATHERSTRIP

REMOVAL

(1) Remove inner belt weatherstrip (Refer to 23 - BODY/WEATHERSTRIP/SEALS/FRONT DOOR INNER BELT WEATHERSTRIP - REMOVAL).
(2) Remove outer belt weatherstrip (Refer to 23 - BODY/WEATHERSTRIP/SEALS/FRONT DOOR OUTER BELT WEATHERSTRIP - REMOVAL).
(3) Grasp seal from upper run channel corner and firmly pull weatherstrip from flange and run channel (Fig. 3).

INSTALLATION

NOTE: Soapy water may be used to aid in installation.

(1) Remove front door speaker.
(2) Position weatherstrip on flange aligning each corner.
(3) Press weatherstrip into position.
(4) Carefully move door glass for and aft and press weatherstrip into glass run channels.
(5) Install front door speaker.
(6) Install outer belt weatherstrip (Refer to 23 - BODY/WEATHERSTRIP/SEALS/FRONT DOOR OUTER BELT WEATHERSTRIP - INSTALLATION).
(7) Install inner belt weatherstrip (Refer to 23 - BODY/WEATHERSTRIP/SEALS/FRONT DOOR INNER BELT WEATHERSTRIP - INSTALLATION).

FRONT DOOR INNER BELT WEATHERSTRIP

REMOVAL

(1) Remove door trim panel (Refer to 23 - BODY/DOOR - FRONT/TRIM PANEL - REMOVAL).
(2) Using a trim stick or other suitable device, carefully pry up inner edge of seal (Fig. 4).
(3) Grasp the edge of the seal and pull upward to remove seal from door flange.

INSTALLATION

(1) Position the seal on the door flange.
(2) Firmly press downward to seat seal on the door flange.
(3) Install the door trim panel (Refer to 23 - BODY/DOOR - FRONT/TRIM PANEL - INSTALLATION).

FRONT DOOR INNER BELT WEATHERSTRIP (Continued)

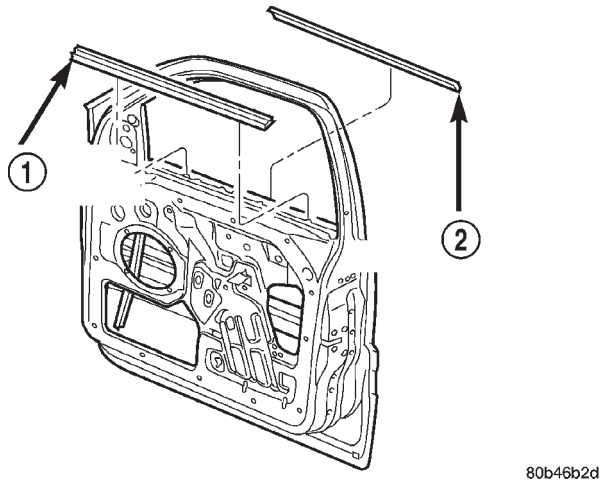

Fig. 4 Inner/Outer Belt Weather Strip

1 - INNER BELT WEATHERSTRIP
2 - OUTER BELT WEATHERSTRIP

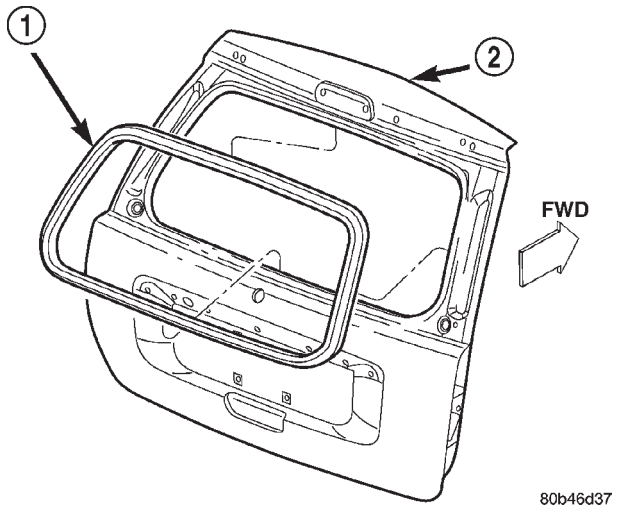

Fig. 5 Flip-up Glass Weatherstrip

1 - WEATHERSTRIP
2 - LIFTGATE W/FLIP-UP GLASS

FRONT DOOR OUTER BELT WEATHERSTRIP

REMOVAL

(1) Lower the door glass.

(2) Remove the screw from the inner door panel attaching the seal to outer door panel (Fig. 4).

(3) Pull the seal rearward to release from the side view mirror bezel.

(4) Lift seal and separate from door panel.

INSTALLATION

(1) Position seal on the door panel.

(2) Push the seal forward to install under the side view mirror bezel.

(3) Install the screw from the inner door panel attaching the seal to outer door panel.

(4) Raise the door glass.

FLIP-UP GLASS WEATHERSTRIP

REMOVAL

(1) Raise flip up glass.

(2) Carefully pull the seal away from the flange around the edge of the glass opening (Fig. 5).

(3) Remove it from the vehicle.

INSTALLATION

(1) Thoroughly clean the surface of the flange as necessary.

(2) Align the weather strip seal with the window opening corners.

(3) Firmly seat the seal around the entire flange. But the seal ends together and smooth out any remaining length.

(4) Weatherstrip break should be 120mm left of latch opening. Cut any surplus from non-plug end only.

FRONT DOOR SECOND WEATHERSTRIP

REMOVAL

The front door secondary weatherstrip is attached to the door shutface with push-in fasteners.

(1) Open door.

(2) Using a trim panel removal tool, remove push-in fasteners attaching secondary weatherstrip to door shutface (Fig. 6).

(3) Separate secondary weatherstrip from door.

INSTALLATION

(1) Clean contact area as necessary.

(2) Position secondary weatherstrip on door shutface.

(3) Install push-in fasteners attaching secondary weatherstrip to door shutface.

FRONT DOOR WEATHERSTRIP

REMOVAL

(1) Remove A-pillar trim (Refer to 23 - BODY/INTERIOR/A-PILLAR TRIM - REMOVAL).

FRONT DOOR WEATHERSTRIP (Continued)

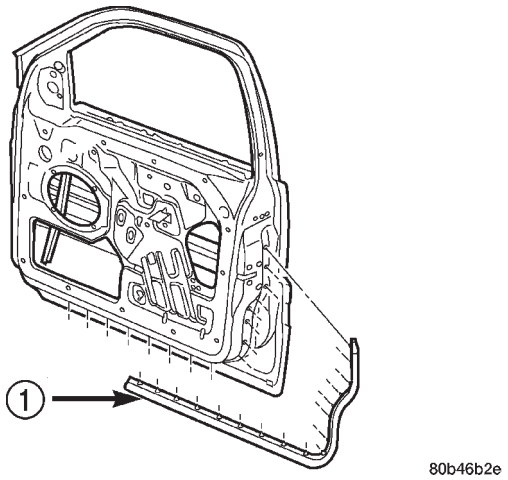

Fig. 6 Front Door Secondary Weatherstrip

1 - SECONDARY WEATHERSTRIP

(2) Remove B-pillar upper trim (Refer to 23 - BODY/INTERIOR/B-PILLAR UPPER TRIM - REMOVAL).

(3) Remove B-pillar lower trim (Refer to 23 - BODY/INTERIOR/B-PILLAR LOWER TRIM - REMOVAL).

(4) Pull weatherstrip from door opening flange.

INSTALLATION

(1) Position weatherstrip at corners.

(2) Move upward and around edge of door opening seating weatherstrip onto flange (Fig. 7).

(3) Engage connector plug with each end of weatherstrip at bottom of door opening.

(4) Install B-pillar lower trim (Refer to 23 - BODY/INTERIOR/B-PILLAR LOWER TRIM - INSTALLATION).

(5) Install B-pillar upper trim (Refer to 23 - BODY/INTERIOR/B-PILLAR UPPER TRIM - INSTALLATION).

(6) Install A-pillar trim (Refer to 23 - BODY/INTERIOR/A-PILLAR TRIM - INSTALLATION).

HOOD SEAL

REMOVAL

(1) Raise hood.

(2) Pull hood seal from upper radiator crossmember.

(3) Separate seal from upper radiator crossmember (Fig. 8).

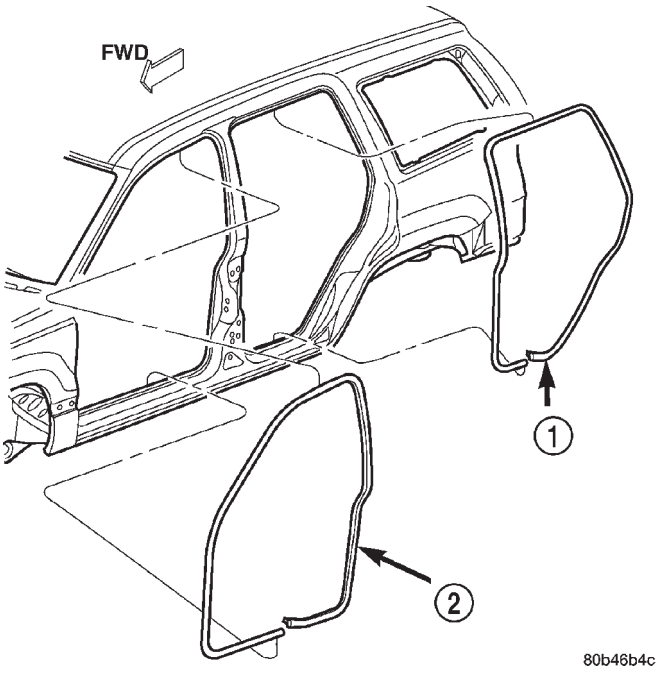

Fig. 7 Door Opening

1 - REAR DOOR OPENING WEATHERSTRIP
2 - FRONT DOOR OPENING WEATHERSTRIP

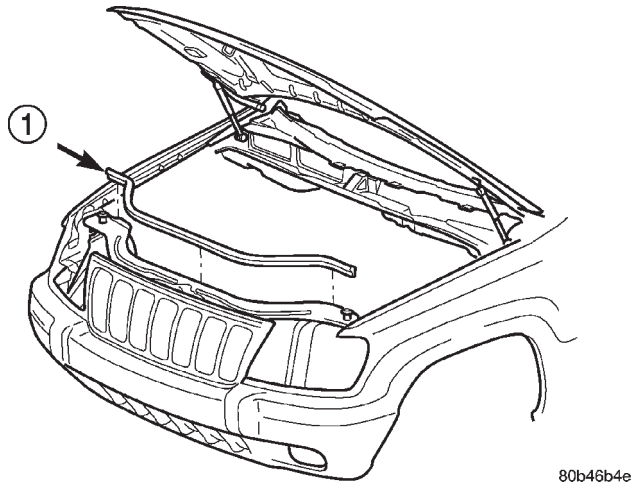

Fig. 8 Hood Seal

1 - HOOD SEAL

INSTALLATION

(1) Position seal on upper radiator crossmember.

(2) Press seal onto upper radiator crossmember to seat.

LIFTGATE OPENING WEATHERSTRIP

REMOVAL

(1) Pull seal away from flange around edge of liftgate opening.
(2) Separate weatherstrip from opening (Fig. 9).
(3) Clean weatherstrip flange as necessary.

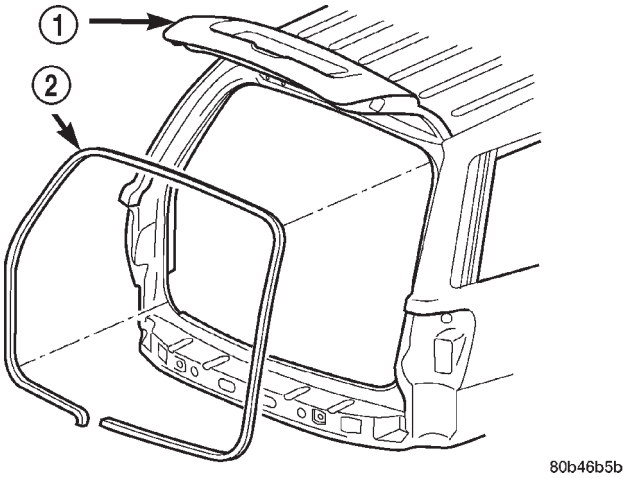

Fig. 9 Liftgate Opening Weatherstrip

1 - LIFTGATE
2 - WEATHERSTRIP

INSTALLATION

(1) Position weatherstrip in opening with left end of seal at opening centerline.
(2) Press weatherstrip onto flange in a clockwise direction.
(3) Center and butt weatherstrip ends together at centerline.
(4) If necessary, cut surplus from weatherstrip (non-plug end only).

REAR DOOR INNER BELT WEATHERSTRIP

REMOVAL

(1) Remove door trim panel (Refer to 23 - BODY/DOORS - REAR/TRIM PANEL - REMOVAL).
(2) Using a trim stick, carefully pry rear inner edge of inner belt weatherstrip upward.
(3) Grasp weatherstrip and pull upward to separate from door flange (Fig. 10).

INSTALLATION

(1) Position weatherstrip on door flange.
(2) Firmly press downward to seat weatherstrip on flange.

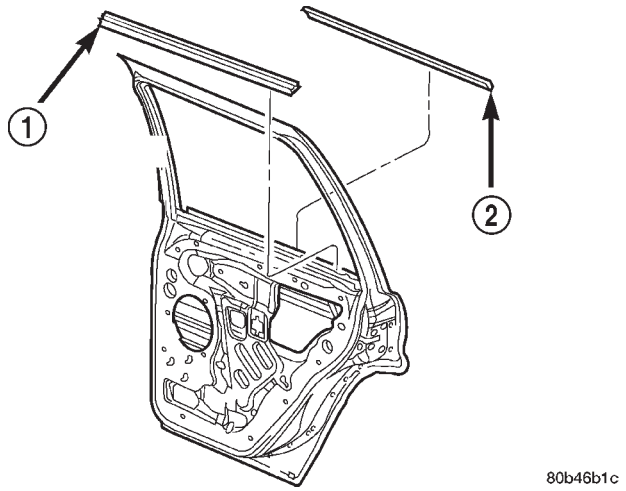

Fig. 10 Rear Door Inner/Outer Belt Weatherstrip

1 - INNER BELT WEATHERSTRIP
2 - OUTER BELT WEATHERSTRIP

(3) Install trim panel (Refer to 23 - BODY/DOORS - REAR/TRIM PANEL - INSTALLATION).

REAR DOOR OUTER BELT WEATHERSTRIP

REMOVAL

(1) Remove trim panel (Refer to 23 - BODY/DOORS - REAR/TRIM PANEL - REMOVAL).
(2) Using a small flat blade, disengage tangs attaching outer belt weatherstrip to inner door panel.
(3) Lift weatherstrip upward and separate from door (Fig. 10).

INSTALLATION

(1) Position the weatherstrip onto the door flange.
(2) Force the weatherstrip onto door flange and engage tangs. Continue rearward until it is seated on flange.
(3) Instal trim panel (Refer to 23 - BODY/DOORS - REAR/TRIM PANEL - INSTALLATION).

REAR DOOR SECONDARY WEATHERSTRIP

REMOVAL

The rear door secondary weatherstrip is attached to the door shutface with push-in fasteners.
(1) Open door.
(2) Using a trim panel removal tool, remove push-in fasteners attaching secondary weatherstrip to door shutface.

REAR DOOR SECONDARY WEATHERSTRIP (Continued)

(3) Separate secondary weatherstrip from door (Fig. 11).

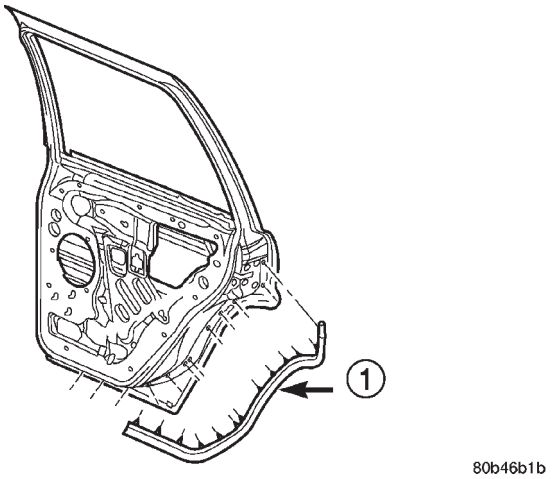

Fig. 11 Rear Door Secondary Weatherstrip

1 - SECONDARY WEATHERSTRIP

INSTALLATION

(1) Clean contact area as necessary.

(2) Position secondary weatherstrip on door shutface.

(3) Install push-in fasteners attaching secondary weatherstrip to door shutface.

REAR DOOR WEATHERSTRIP

REMOVAL

(1) Remove C-pillar trim (Refer to 23 - BODY/INTERIOR/C-PILLAR TRIM - REMOVAL).

(2) Remove B-pillar upper trim (Refer to 23 - BODY/INTERIOR/B-PILLAR UPPER TRIM - REMOVAL).

(3) Remove B-pillar lower trim(Refer to 23 - BODY/INTERIOR/B-PILLAR LOWER TRIM - REMOVAL).

(4) Remove screws at front of quarter trim panel.

(5) Pull weatherstrip from door opening flange.

INSTALLATION

(1) Position weatherstrip at corners.

(2) Move upward and around edge of door opening seating weatherstrip onto flange (Fig. 7).

(3) Engage connector plug with each end of weatherstrip at bottom of door opening.

(4) Install screws at front of quarter trim panel.

(5) Install B-pillar lower trim (Refer to 23 - BODY/INTERIOR/B-PILLAR LOWER TRIM - INSTALLATION).

(6) Install B-pillar upper trim (Refer to 23 - BODY/INTERIOR/B-PILLAR UPPER TRIM - INSTALLATION).

(7) Install C-pillar trim (Refer to 23 - BODY/INTERIOR/C-PILLAR TRIM - INSTALLATION).

ROOF RAIL WEATHERSTRIP / RETAINER

REMOVAL

(1) Open front and rear doors.

(2) Remove secondary seal from retainer to access the screws holding the retainer to the A pillar and roof panel.

(3) Remove the screws holding the retainer in place (Fig. 12).

(4) Remove the retainer.

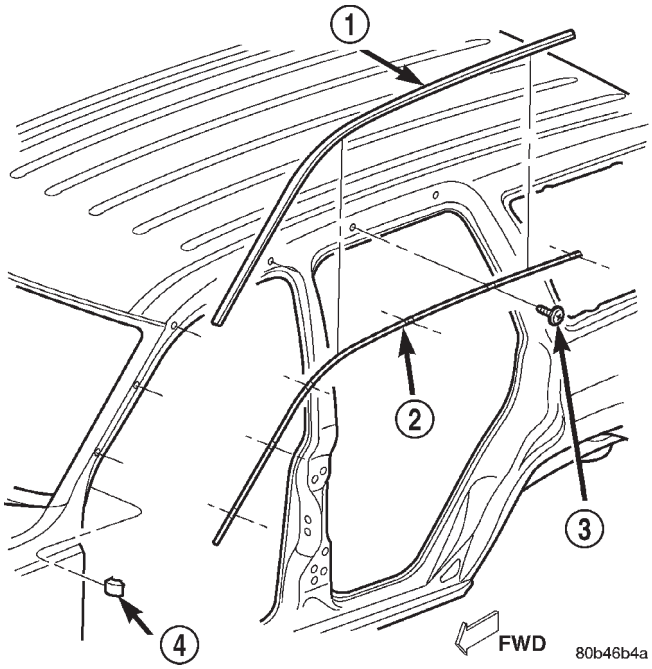

Fig. 12 Upper Body Seal With Retainer

1 - ROOF RAIL WEATHERSTRIP
2 - RETAINER
3 - SCREW
4 - BLOCKER

INSTALLATION

(1) Position the retainer on the A pillar and roof panel.

(2) Align the screw holes and install the screws.

(3) Install secondary seal.

HEATING & AIR CONDITIONING

TABLE OF CONTENTS

page

HEATING & AIR CONDITIONING
DESCRIPTION 1
OPERATION 1
DIAGNOSIS AND TESTING 2
A/C PERFORMANCE 2
HEATER PERFORMANCE 6
STANDARD PROCEDURE 7
DIODE REPLACEMENT 7
SPECIFICATIONS 7
CONTROLS 9
DISTRIBUTION 36
PLUMBING 51

HEATING & AIR CONDITIONING

DESCRIPTION - COOLING SYSTEM REQUIREMENTS

To maintain the performance level of the heating-air conditioning system, the engine cooling system must be properly maintained. The use of a bug screen is not recommended. Any obstructions in front of the radiator or condenser will reduce the performance of the air conditioning and engine cooling systems.

The engine cooling system includes the heater core and the heater hoses. Refer to Cooling for more information before opening, or attempting any service to the engine cooling system.

DESCRIPTION - HEATER AND AIR CONDITIONER

A manual temperature control type heating-air conditioning system is standard factory-installed equipment on this model. An electronically controlled Automatic Zone Control (AZC) type heating-air conditioning system is an available factory-installed option.

All vehicles are equipped with a common HVAC housing assembly (Fig. 1). The system combines air conditioning, heating, and ventilating capabilities in a single unit housing mounted under the instrument panel.

DESCRIPTION - REFRIGERANT SYSTEM SERVICE PORT

The two refrigerant system service ports are used to charge, recover/recycle, evacuate, and test the air conditioning refrigerant system. Unique service port coupler sizes are used on the R-134a system to ensure that the refrigerant system is not accidentally contaminated by the use of the wrong refrigerant (R-12), or refrigerant system service equipment.

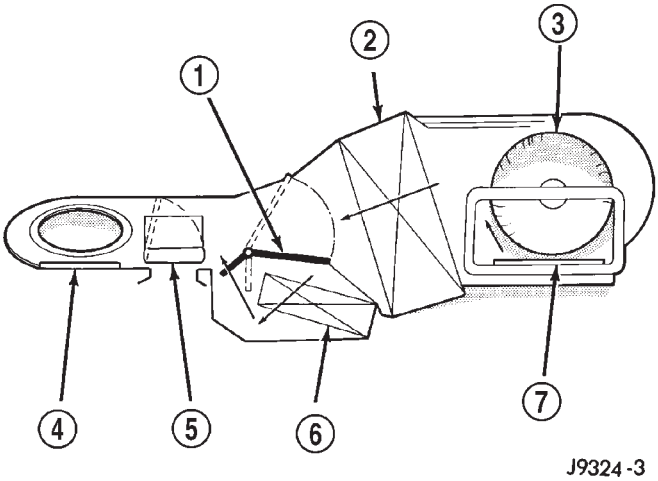

Fig. 1 COMMON BLEND-AIR HVAC SYSTEM

1 - BLEND DOOR
2 - EVAPORATOR CORE
3 - BLOWER
4 - PANEL/DEFROST DOOR
5 - HEAT/DEFROST DOOR
6 - HEATER CORE
7 - RECIRCULATION DOOR

OPERATION - HEATER AND AIR CONDITIONER

Outside fresh air enters the vehicle through the cowl top opening at the base of the windshield, and passes through a plenum chamber to the HVAC system blower housing. Air flow velocity can then be adjusted with the blower motor speed selector switch on the a/c heater control panel. The air intake openings must be kept free of snow, ice, leaves, and other obstructions for the HVAC system to receive a sufficient volume of outside air.

It is also important to keep the air intake openings clear of debris because leaf particles and other debris that is small enough to pass through the cowl plenum screen can accumulate within the HVAC housing. The closed, warm, damp and dark environment created within the HVAC housing is ideal for the growth of certain molds, mildews and other fungi. Any accumu-

lation of decaying plant matter provides an additional food source for fungal spores, which enter the housing with the fresh air. Excess debris, as well as objectionable odors created by decaying plant matter and growing fungi can be discharged into the passenger compartment during HVAC system operation.

Both the manual and AZC heater and air conditioner are blend-air type systems. In a blend-air system, a blend door controls the amount of unconditioned air (or cooled air from the evaporator) that is allowed to flow through, or around, the heater core. A temperature control knob on the a/c heater control panel determines the discharge air temperature by energizing the blend door actuator, which operates the blend door. This allows an almost immediate control of the output air temperature of the system. The AZC system will have separate blend doors and temperature controls for each front seat occupant.

The mode control knob on the a/c heater control panel is used to direct the conditioned air to the selected system outlets. On manual temperature control systems, the mode control knob switches engine vacuum to control the mode doors, which are operated by vacuum actuators. On AZC systems, the mode control knob switches electrical current to control the mode doors, which are operated by electronic actuators.

The outside air intake can be shut off on manual temperature control systems by selecting the Recirculation Mode with the mode control knob. The outside air intake can be shut off on Automatic Zone Control (AZC) type system by pushing the Recirculation Mode button. This will operate the recirculation door that closes off the outside fresh air intake and recirculates the air that is already inside the vehicle.

The air conditioner for all models is designed for the use of non-CFC, R-134a refrigerant. The air conditioning system has an evaporator to cool and dehumidify the incoming air prior to blending it with the heated air. This air conditioning system uses a variable orifice tube in the liquid line near the condenser outlet tube to meter refrigerant flow to the evaporator coil. To maintain minimum evaporator temperature and prevent evaporator freezing, the a/c low pressure switch on the accumulator cycles the compressor clutch. (Refer to 24 - HEATING & AIR CONDITIONING/CONTROLS/A/C LOW PRESSURE SWITCH - OPERATION)

OPERATION - REFRIGERANT SYSTEM SERVICE PORT

The high pressure service port is located on the discharge line near the condenser. The low pressure service port is located on the suction line near the evaporator at the rear of the engine compartment.

Each of the service ports has a threaded plastic protective cap installed over it from the factory. After servicing the refrigerant system, always reinstall both of the service port caps.

DIAGNOSIS AND TESTING - A/C PERFORMANCE

The air conditioning system is designed to provide the passenger compartment with low temperature and low specific humidity air. The evaporator, located in the HVAC housing on the dash panel below the instrument panel, is cooled to temperatures near the freezing point. As warm damp air passes through the cooled evaporator, the air transfers its heat to the refrigerant in the evaporator and the moisture in the air condenses on the evaporator fins. During periods of high heat and humidity, an air conditioning system will be more effective in the Recirculation Mode. With the system in the Recirculation Mode, only air from the passenger compartment passes through the evaporator. As the passenger compartment air dehumidifies, the air conditioning system performance levels improve.

Humidity has an important bearing on the temperature of the air delivered to the interior of the vehicle. It is important to understand the effect that humidity has on the performance of the air conditioning system. When humidity is high, the evaporator has to perform a double duty. It must lower the air temperature, and it must lower the temperature of the moisture in the air that condenses on the evaporator fins. Condensing the moisture in the air transfers heat energy into the evaporator fins and tubing. This reduces the amount of heat the evaporator can absorb from the air. High humidity greatly reduces the ability of the evaporator to lower the temperature of the air.

However, evaporator capacity used to reduce the amount of moisture in the air is not wasted. Wringing some of the moisture out of the air entering the vehicle adds to the comfort of the passengers. Although, an owner may expect too much from their air conditioning system on humid days. A performance test is the best way to determine whether the system is performing up to standard. This test also provides valuable clues as to the possible cause of trouble with the air conditioning system.

If the vehicle has the optional Automatic Zone Control (AZC) system, and has intermittent operational problems or fault codes, be certain that the wire harness connectors on the HVAC housing are properly seated (Fig. 2). To check this condition, unplug the two wire harness connector halves, then plug them in again.

HEATING & AIR CONDITIONING (Continued)

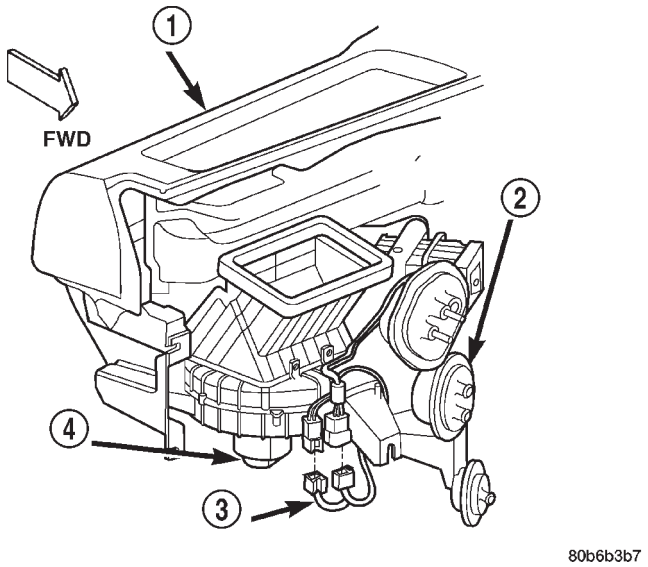

Fig. 2 WIRE HARNESS CONNECTORS

1 - INSTRUMENT PANEL
2 - HVAC HOUSING
3 - INSTRUMENT PANEL WIRE HARNESS
4 - BLOWER MOTOR

Before performing the following procedure, (Refer to 24 - HEATING & AIR CONDITIONING/PLUMBING - CAUTION) (Refer to 24 - HEATING & AIR CONDITIONING/PLUMBING - WARNING). The air temperature in the test room and in the vehicle must be a minimum of 21° C (70° F) for this test.

(1) Connect a tachometer and a manifold gauge set.

(2) If the vehicle has the standard manual temperature control, set the A/C Heater mode control switch knob in the Panel position, the temperature control knob in the full cool (Recirculation Mode) position, the A/C button in the On position, and the blower motor switch knob in the highest speed position. If the vehicle has the optional AZC, set the A/C Heater mode control switch knob in the Panel position, the temperature control knob in the full cool position, the A/C and Recirc buttons in the On position, and the blower motor switch knob in the highest (manual) speed position.

(3) Start the engine and hold the idle at 1,300 rpm with the compressor clutch engaged.

(4) The engine should be at operating temperature. The doors and windows must be open.

(5) Insert a thermometer in the driver side center A/C (panel) outlet. Operate the engine for five minutes.

(6) The compressor clutch may cycle, depending upon the ambient temperature and humidity. If the clutch cycles, unplug the low pressure switch wire harness connector from the switch located on the accumulator (Fig. 3). Place a jumper wire across the terminals of the low pressure switch wire harness connector.

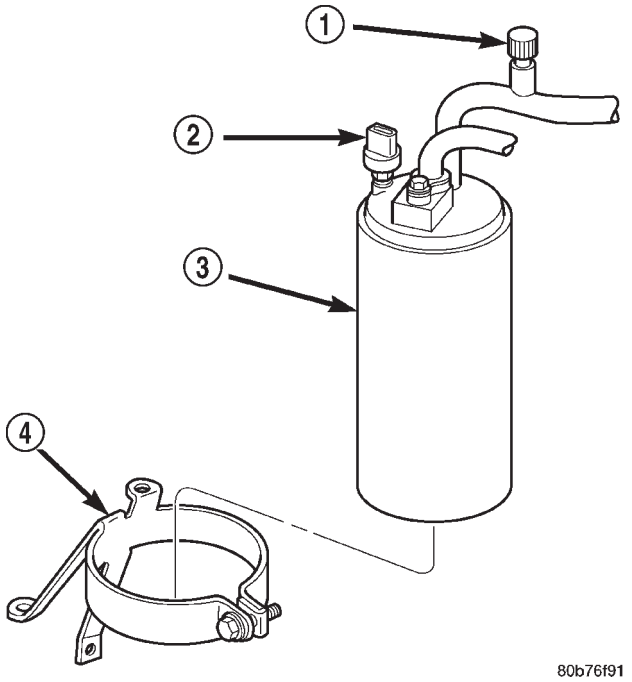

Fig. 3 ACCUMULATOR AND LOW PRESSURE SWITCH

1 - SERVICE PORT
2 - LOW PRESSURE SWITCH
3 - ACCUMULATOR
4 - SUPPORT BRACKET

(7) With the compressor clutch engaged, record the discharge air temperature and the compressor discharge pressure.

(8) Compare the discharge air temperature to the Performance Temperature and Pressure chart. If the discharge air temperature is high, (Refer to 24 - HEATING & AIR CONDITIONING/PLUMBING - DIAGNOSIS AND TESTING - REFRIGERANT SYSTEM LEAKS) and (Refer to 24 - HEATING & AIR CONDITIONING/PLUMBING - STANDARD PROCEDURE - REFRIGERANT SYSTEM CHARGE).

HEATING & AIR CONDITIONING (Continued)

Performance Temperature and Pressure					
Ambient Air Temperature and Humidity	21° C (70° F @ 80% humidity)	27° C (80° F @ 80% humidity)	32° C (90° F @ 80% humidity)	38° C (100° F @ 50% humidity)	43° C 110° F @ 20% humidity)
Air Temperature at Center Panel Outlet	0 to 9° C (32 to 48° F)	1 to 12° C (33 to 54° F)	3 to 17° C (37 to 63° F)	6 to 18° C (43 to 65° F)	10 to 18° C (50 to 65° F)
Evaporator Inlet Pressure at Charge Port	151 to 262 kPa (22 to 38 psi)	221 to 248 kPa (32 to 36 psi)	262 to 296 kPa (38 to 43 psi)	303 kPa (44 psi)	310 kPa (45 psi)
Compressor Discharge Pressure	900 to 1380 kPa (130 to 200 psi)	1380 to 2070 kPa (200 to 300 psi)	1720 to 2140 kPa (250 to 310 psi)	1860 to 2140 kPa (270 to 310 psi)	2070 to 2550 kPa (300 to 370 psi)
Note: The discharge air temperatures will be lower if the humidity is less than the percentages shown.					

(9) Compare the compressor discharge pressure to the Performance Temperature and Pressure chart. If the compressor discharge pressure is high, see the Pressure Diagnosis chart.

Pressure Diagnosis		
Condition	Possible Causes	Correction
Rapid compressor clutch cycling (ten or more cycles per minute).	1. Low refrigerant system charge.	1. See Plumbing/Diagnosis and Testing - Refrigerant System Leaks in this group. Test the refrigerant system for leaks. Repair, evacuate and charge the refrigerant system, if required.
Equal pressures, but the compressor clutch does not engage.	1. No refrigerant in the refrigerant system.	1. See Plumbing/Diagnosis and Testing - Refrigerant System Leaks in this group. Test the refrigerant system for leaks. Repair, evacuate and charge the refrigerant system, if required.
	2. Faulty fuse.	2. Check the fuses in the Power Distribution Center and the junction block. Repair the shorted circuit or component and replace the fuses, if required.
	3. Faulty a/c compressor clutch coil.	3. See A/C Compressor/Diagnosis and Testing - Compressor Clutch Coil in this group. Test the compressor clutch coil and replace, if required.
	4. Faulty compressor clutch relay.	4. See A/C Compressor Clutch Relay/Diagnosis and Testing - Compressor Clutch Relay in this group. Test the compressor clutch relay and relay circuits. Repair the circuits or replace the relay, if required.
	5. Improperly installed or faulty a/c low pressure switch.	5. See A/C Low Pressure Switch/Diagnosis and Testing in this group. Test the a/c low pressure switch and tighten or replace, if required.
	6. Faulty a/c high pressure switch.	6. See A/C High Pressure Switch/Diagnosis and Testing in this group. Test the a/c high pressure switch and replace, if required.
	7. Faulty Powertrain Control Module (PCM).	7. Refer to the proper Diagnostic Procedures manual for testing of the PCM. Test the PCM and replace, if required.

HEATING & AIR CONDITIONING (Continued)

Pressure Diagnosis		
Condition	Possible Causes	Correction
Normal pressures, but A/C Performance Test air temperatures at center panel outlet are too high.	1. Excessive refrigerant oil in system.	1. See Refrigerant Oil/Standard Procedure - Refrigerant Oil Level in this group. Recover the refrigerant from the refrigerant system and inspect the refrigerant oil content. Restore the refrigerant oil to the proper level, if required.
	2. Blend door inoperative or sealing improperly.	2. See Blend Door in this group. Inspect the blend door for proper operation and sealing and correct, if required.
	3. Blend door actuator faulty or inoperative.	3. Perform blend door actuator diagnosis, replace if faulty.
The low side pressure is normal or slightly low, and the high side pressure is too low.	1. Low refrigerant system charge.	1. See Plumbing/Diagnosis and Testing - Refrigerant System Leaks in this group. Test the refrigerant system for leaks. Repair, evacuate and charge the refrigerant system, if required.
	2. Refrigerant flow through the accumulator is restricted.	2. See Accumulator in this group. Replace the restricted accumulator, if required.
	3. Refrigerant flow through the evaporator coil is restricted.	3. See A/C Evaporator in this group. Replace the restricted evaporator coil, if required.
	4. Faulty compressor.	4. See A/C Compressor in this group. Replace the compressor, if required.
The low side pressure is normal or slightly high, and the high side pressure is too high.	1. Condenser air flow restricted.	1. Check the condenser for damaged fins, foreign objects obstructing air flow through the condenser fins, and missing or improperly installed air seals. Refer to Cooling for more information on air seals. Clean, repair, or replace components as required.
	2. Inoperative cooling fan.	2. Refer to Cooling for more information. Test the cooling fan and replace, if required.
	3. Refrigerant system overcharged.	3. See Plumbing/Standard Procedure - Refrigerant System Charge in this group. Recover the refrigerant from the refrigerant system. Charge the refrigerant system to the proper level, if required.
	4. Air in the refrigerant system.	4. See Plumbing/Diagnosis and Testing - Refrigerant System Leaks in this group. Test the refrigerant system for leaks. Repair, evacuate and charge the refrigerant system, if required.
	5. Engine overheating.	5. Refer to Cooling for more information. Test the cooling system and repair, if required.
The low side pressure is too high, and the high side pressure is too low.	1. Accessory drive belt slipping.	1. Refer to Cooling for more information. Inspect the accessory drive belt condition and tension. Tighten or replace the accessory drive belt, if required.
	2. A/C fixed orifice tube not installed.	2. See A/C Fixed Orifice Tube in this group. Replace the liquid line if a/c fixed orifice is missing. See Liquid Line in this group.
	3. Faulty compressor.	3. See A/C Compressor in this group. Replace the compressor, if required.

HEATING & AIR CONDITIONING (Continued)

Pressure Diagnosis		
Condition	Possible Causes	Correction
The low side pressure is too low, and the high side pressure is too high.	1. Restricted refrigerant flow through the refrigerant lines.	1. See Liquid, Suction, and Discharge Line in this group. Inspect the refrigerant lines for kinks, tight bends or improper routing. Correct the routing or replace the refrigerant line, if required.
	2. Restricted refrigerant flow through the a/c fixed orifice tube.	2. See A/C Fixed Orifice Tube in this group. Replace the liquid line if restricted. See Liquid Line in this group.
	3. Restricted refrigerant flow through the condenser.	3. See A/C Condenser in this group. Replace the restricted condenser, if required.

DIAGNOSIS AND TESTING - HEATER PERFORMANCE

Before performing the following tests, refer to Cooling for the procedures to check the radiator coolant level, serpentine drive belt tension, radiator air flow and the radiator fan operation. Also be certain that the accessory vacuum supply line is connected at the engine intake manifold for the manual temperature control system.

MAXIMUM HEATER OUTPUT

Engine coolant is delivered to the heater core through two heater hoses. With the engine idling at normal operating temperature, set the temperature control knob in the full hot position, the mode control switch knob in the floor heat position, and the blower motor switch knob in the highest speed position. Using a test thermometer, check the temperature of the air being discharged at the HVAC housing floor outlets. Compare the test thermometer reading to the Temperature Reference chart.

Temperature Reference				
Ambient Air Temperature	15.5° C (60° F)	21.1° C (70° F)	26.6° C (80° F)	32.2° C (90° F)
Minimum Air Temperature at Floor Outlet	62.2° C (144° F)	63.8° C (147° F)	65.5° C (150° F)	67.2° C (153° F)

If the floor outlet air temperature is too low, refer to Cooling to check the engine coolant temperature specifications. Both of the heater hoses should be hot to the touch. The coolant return heater hose should be slightly cooler than the coolant supply heater hose. If the return hose is much cooler than the supply hose, locate and repair the engine coolant flow obstruction in the cooling system. Refer to Cooling for the procedures.

OBSTRUCTED COOLANT FLOW

Possible locations or causes of obstructed coolant flow:

- Pinched or kinked heater hoses.
- Improper heater hose routing.
- Plugged heater hoses or supply and return ports at the cooling system connections.
- A plugged heater core.

If proper coolant flow through the cooling system is verified, and heater outlet air temperature is still low, a mechanical problem may exist.

MECHANICAL PROBLEMS

Possible locations or causes of insufficient heat:

- An obstructed cowl air intake.
- Obstructed heater system outlets.
- A blend door not functioning properly.

TEMPERATURE CONTROL

If the heater outlet air temperature cannot be adjusted with the temperature control knob(s) on the A/C Heater control panel, the following could require service:

- The A/C heater control.
- The blend door actuator(s).
- The wire harness circuits for the A/C heater control or the blend door actuator(s).
- The blend door(s).
- Improper engine coolant temperature.

HEATING & AIR CONDITIONING (Continued)

STANDARD PROCEDURE - DIODE REPLACEMENT

(1) Disconnect and islolate the negative battery cable.

(2) Locate the diode in the harness, and remove the protective covering.

(3) Remove the diode from the harness, pay attention to the current flow direction (Fig. 4).

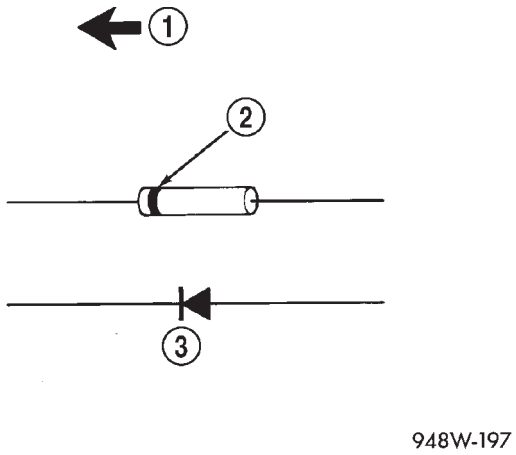

Fig. 4 DIODE IDENTIFICATION

1 - CURRENT FLOW
2 - BAND AROUND DIODE INDICATES CURRENT FLOW
3 - DIODE AS SHOWN IN THE DIAGRAMS

(4) Remove the insulation from the wires in the harness. Only remove enough insulation to solder in the new diode.

(5) Install the new diode in the harness, making sure current flow is correct. If necessary refer to the appropriate wiring diagram for current flow.

(6) Solder the connection together using rosin core type solder only. **Do not use acid core solder.**

(7) Tape the diode to the harness using electrical tape making, sure the diode is completely sealed from the elements.

(8) Re-connect the battery, and test affected systems.

SPECIFICATIONS

A/C APPLICATION TABLE

Item	Description	Notes
VEHICLE	WJ - Grand Cherokee	
SYSTEM	R134a w/ fixed orifice tube	
COMPRESSOR	Nippondenso 10PA17	ND-8 PAG oil
Freeze–up Control	A/C Low Pressure Switch	accumulator mounted
Low psi Control	opens < 22 psi - resets > 34-38 psi	
High psi Control	opens > 450-490 psi - resets < 270-330 psi	line mounted
CONTROL HEAD	manual type	manual controls
	Automatic Zone Control (AZC)	Automatic Zone Control (AZC) with dual infrared sensing
Mode Doors	vacuum actuators (manual)	electric actuator (AZC)
Blend Door	electric actuator	(manual and AZC)
Blend Door (passenger)	electric actuator	(AZC only)
Recirculation Door	vacuum actuator (manual)	electric actuator (AZC)
Blower Motor	hardwired to control head	resistor block (manual), blower controller (AZC)
COOLING FAN	Hybrid - viscous clutch/electric	PCM output
CLUTCH		
Control	relay	PCM controlled
Draw	2.0-3.9 amps @ 12 V	± 0.5V@ 70° F
Gap	0.016″-0.031″	
DRB III®		
Reads	TPS, RPM, A/C switch	
Actuators	clutch relay	

SPECIFICATIONS (Continued)

TORQUE SPECIFICATIONS

TORQUE SPECIFICATIONS

DESCRIPTION	N·m	Ft. Lbs.	In. Lbs.
A/C COMPRESSOR SHAFT BOLT	13	-	115
A/C COMPRESOR LINE MANIFOLD FASTENERS 4.0L/4.7L	25.4	-	225
A/C COMPRESOR LINE MANIFOLD FASTENERS 3.1L DIESEL	22	-	200
A/C COMPRESSOR TO ENGINE BLOCK BOLTS - 4.0L/4.7L	45-65	35-50	-
A/C COMPRESSOR TO ENGINE BLOCK BOLTS - 3.1L DIESEL	41	30	-
A/C COMPRESSOR REAR BRACE BOLTS - 4.0L	40-55	30-40	-
A/C COMPRESSOR REAR BRACE BOLTS - 4.7L	35-45	25-35	-
A/C CONDENSER TO REFRIG. LINE FASTENERS	28	-	250
A/C EVAPORATOR LINE FASTENERS	28	-	250
ACCUMULATOR RETAINING BAND (4.0L/4.7L)	12	-	105
ACCUMULATOR RETAINING BAND (3.1L DIESEL)	5	-	45
BLOWER MOTOR SCREWS	2.2	-	20
DOOR ACTUATOR SCREWS	2.2	-	20
HVAC HOUSING SCREWS	2.2	-	20
HVAC HOUSING TO DASH PANEL NUTS (ENGINE COMP. SIDE)	7	-	60
HVAC HOUSING TO DASH PANEL NUTS (PASSENGER COMP. SIDE)	4.5	-	40
SUCTION LINE TO ACCUMULATOR FITTING	28	-	250

CONTROLS

TABLE OF CONTENTS

page

CONTROLS
DIAGNOSIS AND TESTING 10
VACUUM SYSTEM 10
A/C COMPRESSOR CLUTCH
DESCRIPTION 13
OPERATION. 13
DIAGNOSIS AND TESTING 13
COMPRESSOR CLUTCH COIL. 13
STANDARD PROCEDURE 13
COMPRESSOR CLUTCH BREAK-IN. 13
REMOVAL 14
INSPECTION 14
INSTALLATION. 15
A/C COMPRESSOR CLUTCH RELAY
DESCRIPTION 16
OPERATION. 16
DIAGNOSIS AND TESTING 16
A/C COMPRESSOR CLUTCH RELAY 16
REMOVAL 17
INSTALLATION. 17
A/C HEATER CONTROL
DESCRIPTION 17
OPERATION. 17
DIAGNOSIS AND TESTING 18
AUTOMATIC ZONE CONTROL SYSTEM 18
REMOVAL 24
INSTALLATION. 25
A/C HIGH PRESSURE SWITCH
DESCRIPTION 25
OPERATION. 25
DIAGNOSIS AND TESTING 25
A/C HIGH PRESSURE SWITCH 25
REMOVAL 25
INSTALLATION. 25
A/C LOW PRESSURE SWITCH
DESCRIPTION 26
OPERATION. 26
DIAGNOSIS AND TESTING 26
A/C LOW PRESSURE SWITCH 26
REMOVAL 26
INSTALLATION. 26
BLOWER MOTOR CONTROLLER
DESCRIPTION 27
OPERATION. 27
REMOVAL 27
INSTALLATION. 27
BLOWER MOTOR RESISTOR BLOCK
DESCRIPTION 28
OPERATION. 28
DIAGNOSIS AND TESTING 28
BLOWER MOTOR RESISTOR BLOCK 28
REMOVAL 28
INSTALLATION. 28
BLOWER MOTOR SWITCH
DESCRIPTION 29
OPERATION. 29
DIAGNOSIS AND TESTING 29
BLOWER MOTOR SWITCH-MANUAL TEMPERATURE CONTROL SYSTEM 29
REMOVAL 29
IN-CAR TEMPERATURE SENSOR
DESCRIPTION 30
OPERATION. 30
REMOVAL 30
BLEND DOOR ACTUATOR
DESCRIPTION 30
REMOVAL 30
INSTALLATION. 31
MODE DOOR ACTUATOR
DESCRIPTION 31
REMOVAL 31
INSTALLATION. 32
RECIRCULATION DOOR ACTUATOR
DESCRIPTION 33
REMOVAL 33
INSTALLATION. 34
VACUUM CHECK VALVE
DESCRIPTION 34
OPERATION. 34
REMOVAL 35
INSTALLATION. 35
VACUUM RESERVOIR
DESCRIPTION 35
OPERATION. 35
REMOVAL 35
INSTALLATION. 35

CONTROLS

DIAGNOSIS AND TESTING - VACUUM SYSTEM

Vacuum control is used to operate the mode doors in the standard equipment manual temperature control system HVAC housing. Testing of the A/C Heater mode control switch operation will determine if the vacuum and electrical controls are functioning. However, it is possible that a vacuum control system that operates perfectly at engine idle (high engine vacuum) may not function properly at high engine speeds or loads (low engine vacuum). This can be caused by leaks in the vacuum system, or a faulty vacuum check valve.

A vacuum system test will help to identify the source of poor vacuum system performance or vacuum system leaks. Before starting this test, stop the engine and make certain that the problem isn't a disconnected vacuum supply tube at the engine intake manifold vacuum tap or the vacuum reservoir.

Use an adjustable vacuum test set (Special Tool C-3707-B) and a suitable vacuum pump to test the HVAC vacuum control system. With a finger placed over the end of the vacuum test hose probe (Fig. 1), adjust the bleed valve on the test set gauge to obtain a vacuum of exactly 27 kPa (8 in. Hg.). Release and block the end of the probe several times to verify that the vacuum reading returns to the exact 27 kPa (8 in. Hg.) setting. Otherwise, a false reading will be obtained during testing.

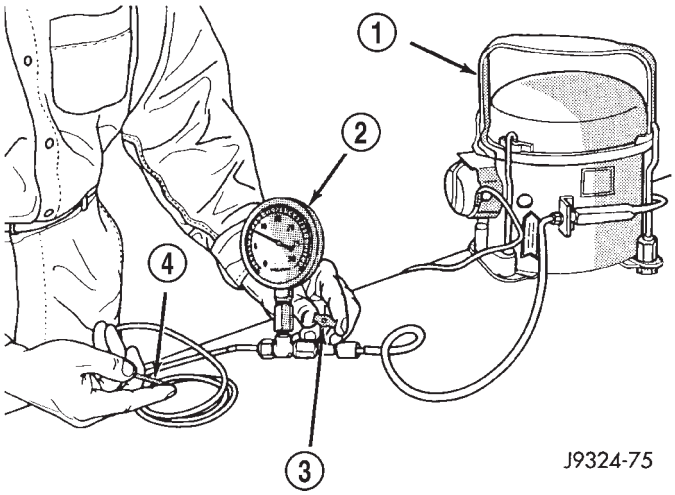

Fig. 1 ADJUST VACUUM TEST BLEED VALVE - TYPICAL

1 - VACUUM PUMP TOOL C-4289
2 - VACUUM TEST SET C-3707
3 - BLEED VALVE
4 - PROBE

VACUUM CHECK VALVES

(1) Remove the vacuum check valve to be tested. The valves are located in the (black) vacuum supply tubes at either the engine intake manifold vacuum tap, or on the bottom of the HVAC unit behind the passenger front floor duct.

(2) Connect the test set vacuum supply hose to the A/C Heater control side of the valve. When connected to this side of the check valve, no vacuum should pass and the test set gauge should return to the 27 kPa (8 in. Hg.) setting. If OK, go to Step 3. If not OK, replace the faulty valve.

(3) Connect the test set vacuum supply hose to the engine vacuum side of the valve. When connected to this side of the check valve, vacuum should flow through the valve without restriction. If not OK, replace the faulty valve.

A/C HEATER CONTROL

(1) Connect the test set vacuum probe to the HVAC vacuum supply (black) tube in the engine compartment. Position the test set gauge so that it can be viewed from the passenger compartment.

(2) Place the A/C Heater mode control switch knob in each mode position, one position at a time, and pause after each selection. The test set gauge should return to the 27 kPa (8 in. Hg.) setting shortly after each selection is made. If not OK, a component or vacuum line in the vacuum circuit of the selected mode has a leak. See the procedure in Locating Vacuum Leaks.

CAUTION: Do not use lubricant on the switch ports or in the holes in the plug, as lubricant will ruin the vacuum valve in the switch. A drop of clean water in the connector plug holes will help the connector slide onto the switch ports.

CONTROLS (Continued)

LOCATING VACUUM LEAKS

WARNING: ON VEHICLES EQUIPPED WITH AIRBAGS, DISABLE THE AIRBAG SYSTEM BEFORE ATTEMPTING ANY STEERING WHEEL, STEERING COLUMN, OR INSTRUMENT PANEL COMPONENT DIAGNOSIS OR SERVICE. DISCONNECT AND ISOLATE THE BATTERY NEGATIVE (GROUND) CABLE, THEN WAIT TWO MINUTES FOR THE AIRBAG SYSTEM CAPACITOR TO DISCHARGE BEFORE PERFORMING FURTHER DIAGNOSIS OR SERVICE. THIS IS THE ONLY SURE WAY TO DISABLE THE AIRBAG SYSTEM. FAILURE TO TAKE THE PROPER PRECAUTIONS COULD RESULT IN AN ACCIDENTAL AIRBAG DEPLOYMENT AND POSSIBLE PERSONAL INJURY.

(1) Disconnect the vacuum harness connector from the back of the A/C Heater mode control switch on the control panel.

(2) Connect the test set vacuum hose probe to each port in the vacuum harness connector, one at a time, and pause after each connection (Fig. 2). The test set gauge should return to the 27 kPa (8 in. Hg.) setting shortly after each connection is made. If OK, replace the faulty mode control switch. If not OK, go to Step 3.

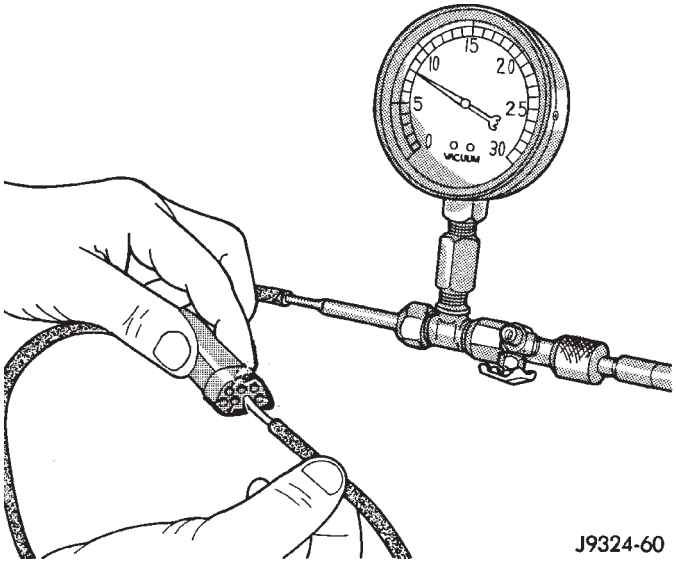

Fig. 2 VACUUM CIRCUIT TEST

(3) Determine the vacuum line color of the vacuum circuit that is leaking. To determine the vacuum line colors, refer to the Vacuum Circuits chart (Fig. 3).

(4) Disconnect and plug the vacuum line from the component (fitting, actuator, valve, switch, or reservoir) on the other end of the leaking circuit. Instrument panel disassembly or removal may be necessary to gain access to some components.

(5) Connect the test set hose or probe to the open end of the leaking circuit. The test set gauge should return to the 27 kPa (8 in. Hg.) setting shortly after each connection is made. If OK, replace the faulty disconnected component. If not OK, go to Step 6.

(6) To locate a leak in a vacuum line, leave one end of the line plugged and connect the test set hose or probe to the other end. Run your fingers slowly along the line while watching the test set gauge. The vacuum reading will fluctuate when your fingers contact the source of the leak. To repair the vacuum line, cut out the leaking section of the line. Then, insert the loose ends of the line into a suitable length of 3 millimeter (1/8-inch) inside diameter rubber hose.

A/C COMPRESSOR CLUTCH (Continued)

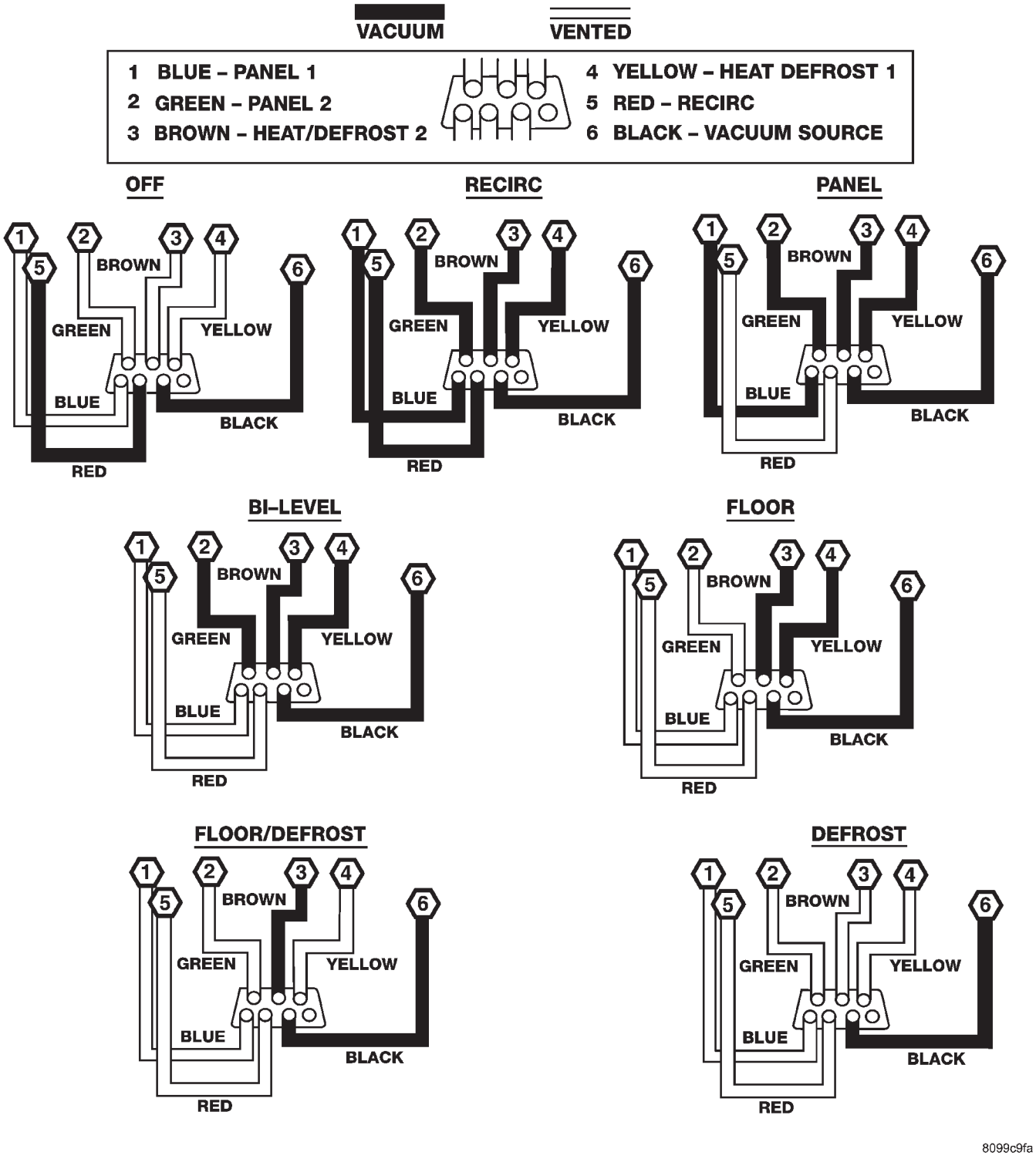

Fig. 3 VACUUM CIRCUITS

A/C COMPRESSOR CLUTCH

DESCRIPTION

The compressor clutch assembly consists of a stationary electromagnetic coil, a hub bearing and pulley assembly, and a clutch plate (Fig. 4). The electromagnetic coil unit and the hub bearing and pulley assembly are each retained on the nose of the compressor front housing with snap rings. The clutch plate is keyed to the compressor shaft and secured with a bolt.

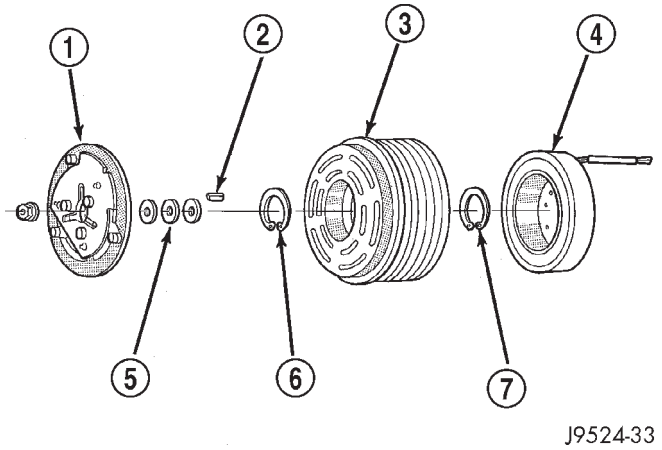

Fig. 4 COMPRESSOR CLUTCH - TYPICAL

1 - CLUTCH PLATE
2 - SHAFT KEY
3 - PULLEY
4 - COIL
5 - CLUTCH SHIMS
6 - SNAP RING
7 - SNAP RING

OPERATION

The compressor clutch components provide the means to engage and disengage the compressor from the engine serpentine accessory drive belt. When the clutch coil is energized, it magnetically draws the clutch into contact with the pulley and drives the compressor shaft. When the coil is not energized, the pulley freewheels on the clutch hub bearing, which is part of the pulley. The compressor clutch and coil are the only serviced parts on the compressor.

The compressor clutch engagement is controlled by several components: the a/c switch on the a/c heater control panel, the Automatic Zone Control (AZC) control module (if the vehicle is so equipped), the a/c low pressure switch, the a/c high pressure switch, the a/c compressor clutch relay, and the Powertrain Control Module (PCM). The PCM may delay compressor clutch engagement for up to thirty seconds. Refer to Electronic Control Modules for more information on the PCM controls.

DIAGNOSIS AND TESTING - COMPRESSOR CLUTCH COIL

For circuit descriptions and diagrams, refer to the appropriate wiring diagrams. The battery must be fully-charged before performing the following tests. Refer to Battery for more information.

(1) Connect an ammeter (0 to 10 ampere scale) in series with the clutch coil terminal. Use a voltmeter (0 to 20 volt scale) with clip-type leads for measuring the voltage across the battery and the compressor clutch coil.

(2) With the a/c heater mode control switch in any a/c mode, the a/c heater control a/c switch in the ON position, and the blower motor switch in the lowest speed position, start the engine and run it at normal idle.

(3) The compressor clutch coil voltage should read within 0.2 volts of the battery voltage. If there is voltage at the clutch coil, but the reading is not within 0.2 volts of the battery voltage, test the clutch coil feed circuit for excessive voltage drop and repair as required. If there is no voltage reading at the clutch coil, use a DRBIII® scan tool and the appropriate diagnostic information for testing of the compressor clutch circuit. The following components must be checked and repaired as required before you can complete testing of the clutch coil:

- Fuses in the junction block and the Power Distribution Center (PDC)
- A/C heater mode control switch
- A/C compressor clutch relay
- A/C high pressure switch
- A/C low pressure switch
- Powertrain Control Module (PCM)

(4) The compressor clutch coil is acceptable if the current draw measured at the clutch coil is 2.0 to 3.9 amperes with the electrical system voltage at 11.5 to 12.5 volts. This should only be checked with the work area temperature at 21° C (70° F). If system voltage is more than 12.5 volts, add electrical loads by turning on electrical accessories until the system voltage drops below 12.5 volts.

(a) If the clutch coil current reading is four amperes or more, the coil is shorted and should be replaced.

(b) If the clutch coil current reading is zero, the coil is open and should be replaced.

STANDARD PROCEDURE - COMPRESSOR CLUTCH BREAK-IN

After a new compressor clutch has been installed, cycle the compressor clutch approximately twenty times (five seconds on, then five seconds off). During this procedure, set the A/C Heater control in the Recirculation Mode, the A/C button in the on position, the blower motor switch in the highest speed

A/C COMPRESSOR CLUTCH (Continued)

position, and the engine speed at 1500 to 2000 rpm. This procedure (burnishing) will seat the opposing friction surfaces and provide a higher compressor clutch torque capability.

REMOVAL

The refrigerant system can remain fully-charged during compressor clutch, pulley, or coil replacement. The compressor clutch can be serviced in the vehicle.

(1) Disconnect and isolate the battery negative cable.

(2) Remove the serpentine drive belt. Refer to Cooling for the procedures.

(3) Remove the bolt that secures the compressor clutch to the compressor shaft (Fig. 5). A band-type oil filter wrench may be used to secure the clutch during bolt removal.

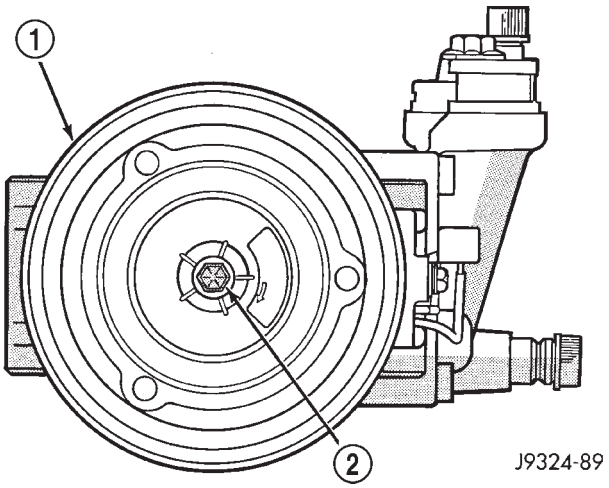

Fig. 5 COMPRESSOR SHAFT BOLT

1 - COMPRESSOR CLUTCH PLATE
2 - COMPRESSOR SHAFT BOLT

(4) Tap the clutch plate with a plastic mallet to release it from the splines on the compressor shaft. Remove the clutch plate and shim(s) from the compressor shaft (Fig. 6).

CAUTION: Do not pry between the clutch plate assembly and the pulley to remove it from the compressor shaft. Prying may damage the clutch plate assembly.

(5) Remove the external snap ring that secures the compressor clutch pulley to the nose of the compressor front housing with snap ring pliers (Special Tool C-4574) and slide the pulley assembly off of the compressor (Fig. 7).

(6) Remove the screw and retainer from the clutch coil lead wire harness on the compressor front housing.

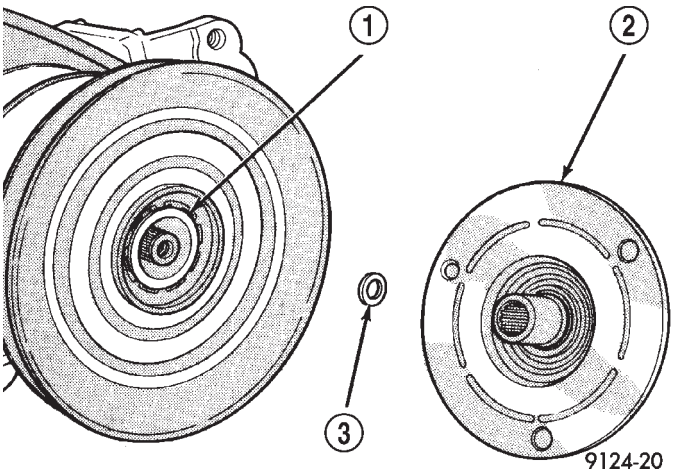

Fig. 6 CLUTCH PLATE AND SHIM(S)

1 - COMPRESSOR SHAFT
2 - CLUTCH PLATE
3 - CLUTCH PLATE SHIM

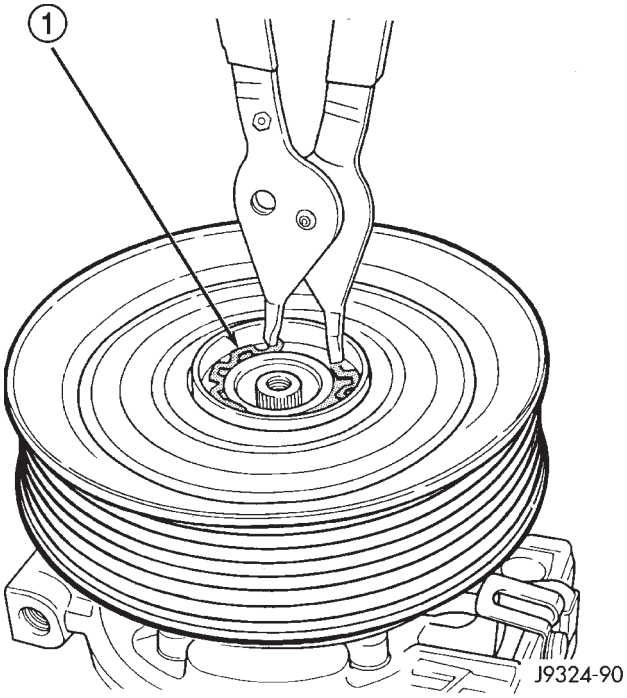

Fig. 7 PULLEY SNAP RING

1 - SNAP RING

(7) Remove the external snap ring that secures the compressor clutch coil to the nose of the compressor front housing with snap ring pliers and slide the coil assembly off of the compressor (Fig. 8).

INSPECTION

Examine the friction surfaces of the clutch pulley and the clutch plate for wear. The pulley and plate

A/C COMPRESSOR CLUTCH (Continued)

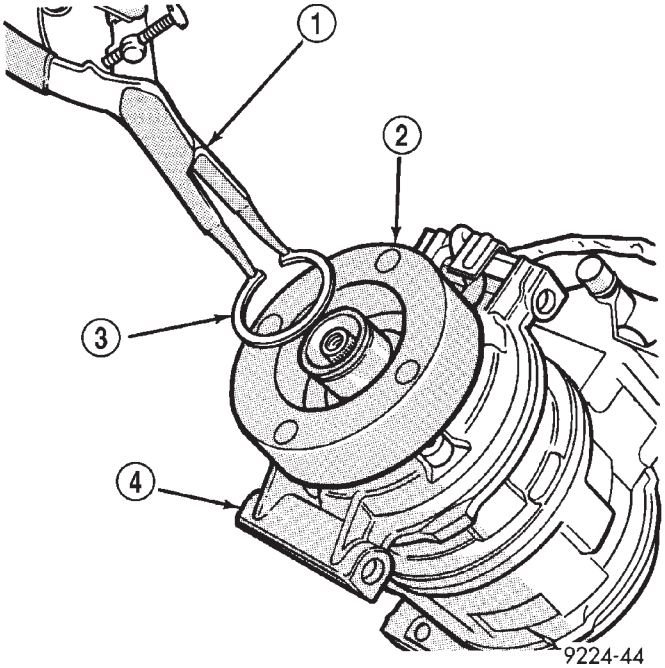

Fig. 8 CLUTCH COIL SNAP RING

1 - SNAP RING PLIERS
2 - CLUTCH COIL
3 - SNAP RING
4 - COMPRESSOR

should be replaced if there is excessive wear or scoring.

If the friction surfaces are oily, inspect the shaft and nose area of the compressor for refrigerant oil. Remove the felt wick from around the shaft inside the nose of the compressor front housing. If the felt is saturated with refrigerant oil, the compressor shaft seal is leaking and the compressor must be replaced.

Check the clutch pulley bearing for roughness or excessive leakage of grease. Replace the bearing, if required.

INSTALLATION

(1) Align the dowel pin on the back of the clutch field coil with the hole in the compressor front housing and press the field coil into place over the nose of the compressor.

(2) Install the clutch coil lead wire harness retaining clip on the compressor front housing and tighten the retaining screw.

(3) Install the clutch field coil and snap ring with snap ring pliers (Special Tool C-4574). The bevel side of the snap ring must be facing outward. Also, both eyelets of the snap ring must be to the right or left of the pin on the compressor. Press in on the snap ring to be certain that it is properly seated in the groove.

CAUTION: If the snap ring is not fully seated in the groove it will vibrate out, resulting in a clutch failure and severe damage to the front housing of the compressor.

(4) Install the pulley assembly onto the compressor. If necessary, place a block of wood on the friction surface and tap gently with a hammer (Fig. 9).

CAUTION: Do not mar the pulley friction surface.

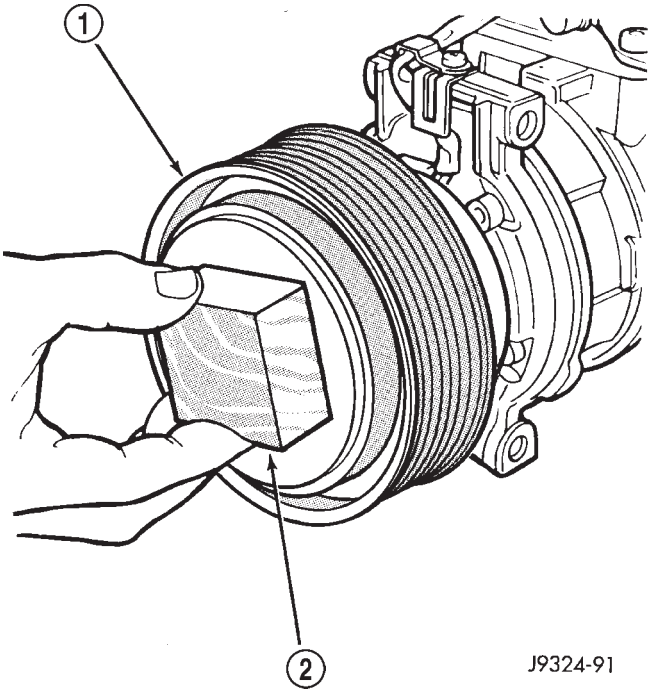

Fig. 9 PULLEY ASSEMBLY INSTALL

1 - PULLEY ASSEMBLY
2 - WOOD BLOCK

(5) Install the pulley assembly retaining snap ring (bevel side outward) with snap ring pliers (Special Tool C-4574). Press in on the snap ring to be certain that it is properly seated in the groove.

(6) If the original clutch plate assembly and pulley assembly are to be reused, the old shim(s) can be used. If not, place a stack of shim(s) equal to the old shim(s) on the shaft against the shoulder.

(7) Install the clutch plate assembly onto the shaft.

(8) With the clutch plate assembly tight against the shim(s), measure the air gap between the clutch plate and the pulley face with feeler gauges. The air gap should be between 0.35 to 0.65 millimeter (0.014 to 0.026 inch). If the proper air gap is not obtained, add or subtract shims as needed until the desired air gap is obtained.

A/C COMPRESSOR CLUTCH (Continued)

(9) Install the compressor shaft bolt. Tighten the bolt to 13 N·m (115 in. lbs.).

NOTE: The shims may compress after tightening the shaft bolt. Check the air gap in four or more places to verify the air gap is still correct. Spin the pulley before performing a final check of the air gap.

(10) To complete the installation, (Refer to 24 - HEATING & AIR CONDITIONING/PLUMBING/A/C COMPRESSOR - INSTALLATION)

A/C COMPRESSOR CLUTCH RELAY

DESCRIPTION

The compressor clutch relay is a International Standards Organization (ISO) micro-relay. The terminal designations and functions are the same as a conventional ISO relay. However, the micro-relay terminal orientation (footprint) is different, the current capacity is lower, and the relay case dimensions are smaller than those of the conventional ISO relay.

OPERATION

The compressor clutch relay is a electromechanical device that switches battery current to the compressor clutch coil when the Powertrain Control Module (PCM) grounds the coil side of the relay. The PCM responds to inputs from the a/c compressor switch on the a/c heater control panel, the Automatic Zone Control (AZC) control module (if the vehicle is so equipped), the a/c low pressure switch, and the a/c high pressure switch. (Refer to 24 - HEATING & AIR CONDITIONING/CONTROLS/A/C COMPRESSOR CLUTCH RELAY - DIAGNOSIS AND TESTING)

The compressor clutch relay is located in the Power Distribution Center (PDC) in the engine compartment. Refer to the PDC label for relay identification and location.

The compressor clutch relay cannot be repaired and, if faulty or damaged, it must be replaced.

DIAGNOSIS AND TESTING - A/C COMPRESSOR CLUTCH RELAY

For circuit descriptions and diagrams, refer to the appropriate wiring information.

The compressor clutch relay (Fig. 10) is located in the Power Distribution Center (PDC). Refer to the PDC label for relay identification and location. Remove the relay from the PDC to perform the following tests:

(1) A relay in the de-energized position should have continuity between terminals 87A and 30, and no continuity between terminals 87 and 30. If OK, go to Step 2. If not OK, replace the faulty relay.

(2) Resistance between terminals 85 and 86 (electromagnet) should be 75 ± 5 ohms. If OK, go to Step 3. If not OK, replace the faulty relay.

(3) Connect a battery to terminals 85 and 86. There should now be continuity between terminals 30 and 87, and no continuity between terminals 87A and 30. If OK, see the Relay Circuit Test procedure in this group. If not OK, replace the faulty relay.

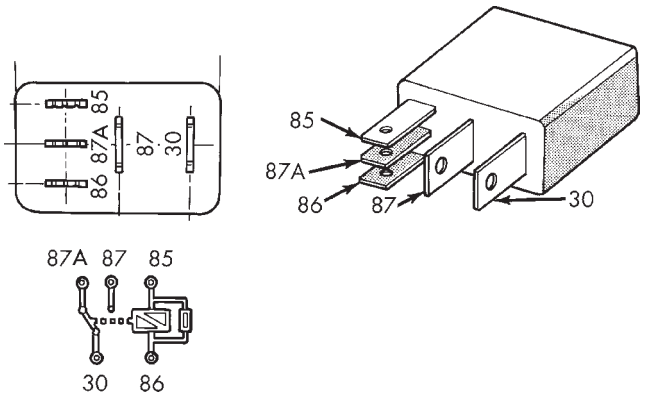

Fig. 10 A/C COMPRESSOR CLUTCH RELAY

30 - COMMON FEED
85 - COIL GROUND
86 - COIL BATTERY
87 - NORMALLY OPEN
87A - NORMALLY CLOSED

RELAY CIRCUIT TEST

For circuit descriptions and diagrams, refer to the appropriate wiring information..

(1) The relay common feed terminal cavity (30) is connected to fused battery feed. There should be battery voltage at the cavity for relay terminal 30 at all times. If OK, go to Step 2. If not OK, repair the open circuit to the fuse in the PDC as required.

(2) The relay normally closed terminal (87A) is not used in this application. Go to Step 3.

(3) The relay normally open terminal cavity (87) is connected to the compressor clutch coil. There should be continuity between this cavity and the A/C compressor clutch relay output circuit cavity of the compressor clutch coil wire harness connector. If OK, go to Step 4. If not OK, repair the open circuit as required.

(4) The relay coil battery terminal (86) is connected to the fused ignition switch output (run/start) circuit. There should be battery voltage at the cavity for relay terminal 86 with the ignition switch in the On position. If OK, go to Step 5. If not OK, repair the open circuit to the fuse in the junction block as required.

A/C COMPRESSOR CLUTCH RELAY (Continued)

(5) The coil ground terminal cavity (85) is switched to ground through the Powertrain Control Module (PCM). There should be continuity between this cavity and the A/C compressor clutch relay control circuit cavity of the PCM wire harness connector C (gray) at all times. If not OK, repair the open circuit as required.

REMOVAL

(1) Disconnect and isolate the battery negative cable.

(2) Remove the cover from the Power Distribution Center (PDC) (Fig. 11).

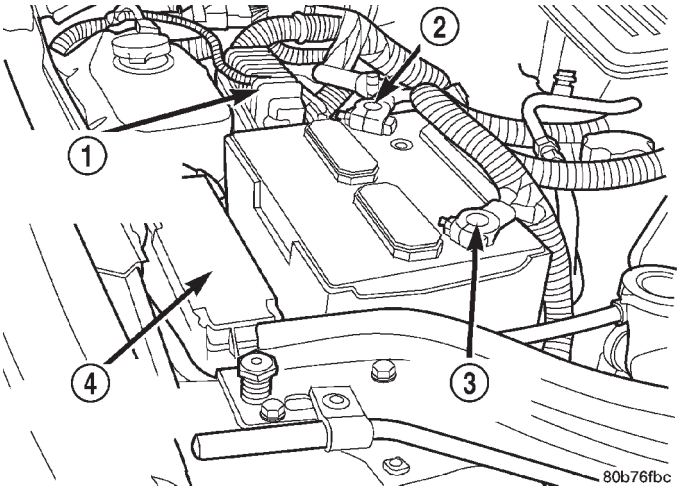

Fig. 11 POWER DISTRIBUTION CENTER (PDC)

1 - TRANSMISSION CONTROL MODULE (TCM)
2 - NEGATIVE CABLE
3 - POSITIVE CABLE
4 - POWER DISTRIBUTION CENTER (PDC)

(3) Refer to the label on the PDC for compressor clutch relay identification and location.

(4) Unplug the compressor clutch relay from the PDC.

INSTALLATION

(1) Install the compressor clutch relay by aligning the relay terminals with the cavities in the PDC and pushing the relay firmly into place.

(2) Install the PDC cover.

(3) Connect the battery negative cable.

(4) Test the relay operation.

A/C HEATER CONTROL

DESCRIPTION

The manual temperature control HVAC system uses a combination of electrical, and vacuum controls. The Automatic Zone Control (AZC) HVAC system uses only electrical controls. These controls provide the vehicle operator with a number of setting options to help control the climate and comfort within the vehicle. Refer to the owner's manual in the vehicle glove box for more information on the suggested operation and use of these controls.

Both a/c heater control panels are located on the instrument panel inboard of the steering column and below the radio (Fig. 12). Both control panels contain rotary-type temperature control knob(s), a rotary-type mode control switch knob, a rotary-type blower motor speed switch knob and an air conditioning compressor push button switch. The rear window defogger push button switch is also located on a/c heater control panel. The AZC control panel also features a recirculation push button switch and a vacuum fluorescent display area.

MANUAL AIR CONDITIONING SYSTEM

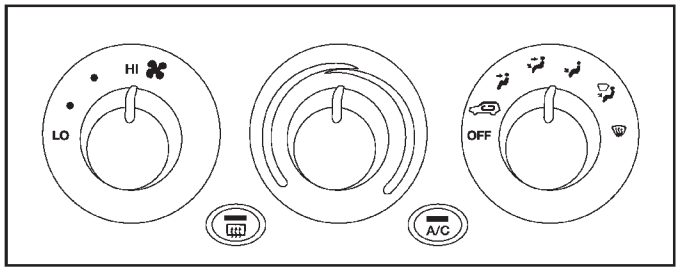

AUTOMATIC ZONE CONTROL SYSTEM

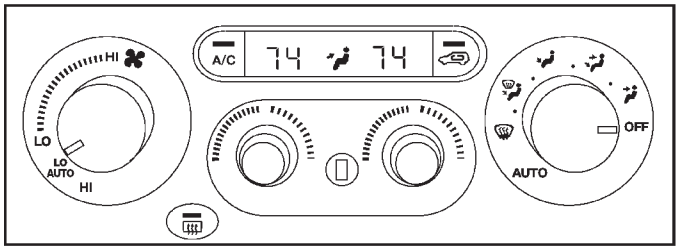

Fig. 12 A/C HEATER CONTROL PANELS

OPERATION

The AZC control module uses infrared sensing technology to control occupant comfort levels, not the actual passenger compartment air temperature. Dual infrared sensors mounted in the face of the control unit independently measure the surface temperature to maintain customer-perceived comfort temperature under changing conditions. Dual Zone temperature control provides wide side-to-side variation in comfort temperature to exceed the needs of either front seat occupant. This sensing system replaces interior air temperature and solar sensors used to approximate direct sensing control through complex control programs.

A/C HEATER CONTROL (Continued)

Both the manual A/C Heater control panel and the AZC control panel are serviced only as complete units and cannot be repaired. If faulty or damaged, the entire control panel unit must be replaced.

DIAGNOSIS AND TESTING - AUTOMATIC ZONE CONTROL SYSTEM

The Automatic Zone Control (AZC) control module has a system self-diagnostic mode which continuously monitors various parameters during normal system operation. If a system fault is detected, a current and historical fault is recorded. When the current fault is cleared, the historical fault remains until reset (manually or automatically). Both the current and historical fault codes can be accessed through either the front panel, or over the Programmable Communications Interface (PCI) bus using a DRBIII® scan tool, and the appropriate diagnostic information.

The AZC control module is capable of three different types of self-diagnostic tests, as follows:

- Fault Code Tests
- Input Circuit Tests
- Output Circuit/Actuator Tests

The information that follows describes:

- How to read the self-diagnostic display
- How to enter the AZC control module self-diagnostic test mode
- How to select the self-diagnostic test types
- How to perform the different tests

ENTERING THE AZC SELF-DIAGNOSTIC MODE

To enter the AZC self-diagnostic mode, perform the following:

(1) Depress the a/c and recirc buttons at the same time and hold. Rotate the left temperature control knob clockwise (CW) one detent.

(2) If you continue to keep the a/c and recirc buttons depressed, the AZC control module will perform a Segment Test of the Vacuum Fluorescent (VF) display. In the Segment Test you should see all of the display segments illuminate as long as both buttons are held. If a display segment fails to illuminate, the vacuum fluorescent display is faulty and the a/c heater control must be replaced.

(3) After viewing the Segment Test, release the A/C and Recirc buttons and the display will clear momentarily. **If a 0 is displayed, then no faults are set in the system.** Should there be any faults, either ″current″ or ″historical″, all fault codes will be displayed in ascending numerical sequence (note no effort is made to display fault codes in chronological order). Each fault code is displayed for one second before the next code is displayed. Once all fault codes have been displayed, the system will then repeat the fault code numbers. This will continue until the left side set temperature control is moved at least one detent position in the CW direction or the ignition is turned ″OFF″.

FAULT CODE TESTS

Fault codes are two-digit numbers that identify a circuit that is malfunctioning. There are two different kinds of fault codes.

- **Current Fault Codes** - Current means the fault is present right now. There are two types of current faults: input faults, and system faults.
- **Historical Fault Codes** - Historical or stored means that the fault occurred previously, but is not present right now. A majority of historical fault codes are caused by intermittent wire harness or wire harness connector problems.

A/C HEATER CONTROL (Continued)

CURRENT FAULT CODES	
Input faults	01 = IR thermister circuit open
	02 = IR thermister circuit shorted
	03 = Fan pot shorted
	04 = Fan pot open
	05 = Mode pot shorted
	06 = Mode pot open
	07 = IR sensor delta too large
	08 = Reserved
	09 = Reserved
	10 = One of four motor drivers has drive ″A″ shorted to ground
	11 = Engine air intake temperature Buss message missing
	12 = Country code Buss message missing
System Faults	13 = Mode motor not responding
	14 = AI (Recirc) motor not responding
	15 = Left temperature door not responding
	16 = Right temperature door not responding
	17 = Mode door travel range too small
	18 = Mode door travel range too large
	19 = AI (Recirc) door travel too small
	20 = AI (Recirc) door travel too large
	21 = Left temperature door travel too small
	22 = Left temperature door travel too large
	23 = Right temperature door travel too small
	24 = Right temperature door travel too large
	25 = Calibration check sum error
	26 = Engine coolant temp bus message missing
	27 = Vehicle speed bus message missing
	28 = Engine RPM bus message missing
	29 = OAT bus message missing
	30 = Display intensity bus message missing
	31 = VIN number bus message missing
	32 = Raw OAT bus message missing

A/C HEATER CONTROL (Continued)

HISTORICAL FAULT CODES	
Input faults	33 = IR thermister circuit was open
	34 = IR thermister circuit was shorted
	35 = Fan pot was shorted
	36 = Fan pot was open
	37 = Mode pot was shorted
	38 = Mode pot was open
	39 = IR sensor delta was too large
	40 = Reserved
	41 = Reserved
	42 = One of four motor drivers had drive ″A″ shorted to ground
	43 = Engine air intake temperature Buss message missing
	44 = Country code Buss message missing
System Faults	45 = Mode motor was not responding
	46 = AI (Recirc) motor was not responding
	47 = Left temperature door was not responding
	48 = Right temperature door was not responding
	49 = Mode door travel range too small
	50 = Mode door travel range too large
	51 = AI (Recirc) door travel range too small
	52 = AI (Recirc) door travel range too large
	53 = Left temperature door travel too small
	54 = Left temperature door travel too large
	55 = Right temperature door travel too small
	56 = Right temperature door travel too large
	57 = Calibration check sum error
	58 = Engine coolant temp bus message missing
	59 = Vehicle speed bus message missing
	60 = Engine RPM bus message missing
	61 = OAT bus message missing
	62 = Display intensity bus message missing
	63 = VIN number bus message missing
	64 = Raw OAT bus message was missing
	65 = Reserved
	66 = Reserved
	67 = Reserved

NOTE: A battery disconnect will erase all faults stored in Random Access Memory (RAM) of the AZC control module. It is recommended that all faults be recorded before they are erased.

RETRIEVING FAULT CODES

(1) To begin the fault code tests, depress the A/C and Recirc buttons at the same time and rotate the left temperature control knob clockwise (CW) one detent, then release the push-button.

(2) **If there are no fault codes, the “00” display value will remain in the VF window.** Should there be any codes, each will be displayed for one second in ascending numerical sequence (note: no effort is made to display faults in the order they occurred). The left side set temperature display will

A/C HEATER CONTROL (Continued)

be blanked and the right side set temperature display will indicate current and historical codes (8 historical max) presently active. Once all codes have been displayed, the system will repeat the fault code numbers. This will continue until the left side set temperature control is moved at least one detent position in either direction, by pressing both the A/C and Recirc buttons at the same time, or the ignition is turned off. Record all of the fault codes, then see the Current and Historical Fault Code charts for the descriptions.

CLEARING FAULT CODES

Current faults cannot be electronically cleared. Repair must be made to the system to eliminate the fault causing code. Historical fault codes can be cleared manually, or automatically. To clear a historical fault manually, depress and hold either the A/C or Recirc button for at least three seconds while the display is in the fault code mode of operation. Historical fault codes are cleared automatically when the corresponding current fault code has been cleared, and has remained cleared for a number of ignition cycles. The faults have been cleared when two horizontal bars appear in the Test Selector display.

EXITING SELF-DIAGNOSTIC MODE The self-diagnostic mode can be exited by pressing both the A/C and Recirc buttons at the same time, or turning off the ignition.

MONITOR CURRENT PARAMETERS

While in the display fault code mode of operation, current system parameters can also be monitored and/or forced. Rotating the left side set temperature control clockwise will increase the pointer number while rotating the control counter clockwise will decrease the pointer number. Rotating the right set temperature control will have no impact on pointer value or the value of the parameter being monitored. Once the desired pointer number has been selected, pressing either the AC or Recirc buttons will display the current value of the selected parameter. **The right side set temperature display is only capable of displaying only values ranging from 0 to 99, the left side set temperature display is used for values greater than 99. If the value is less than 99, the left side set temperature display remains blanked.** While a parameter is being overridden, the system will continue to function normally except for the parameter which is being manually controlled.

For values < 0, the ″G″ segment in the left side set temperature Most Significant Digit (MSD)(or left-most number in the pair) will be used to indicate a negative number. For values between -01 to -99 the Least Significant Digit (LSD)(or right-most number of the pair) in the left side set temperature will remain blank. System control of parameter being displayed can be overridden by rotating the right set temperature control in either direction. Rotating the right temperature control in the CW direction, the selected parameter value is overridden and incremented beginning at the value which was being displayed. Rotating the right temperature control in the CCW direction, the selected parameter value is overridden and decremented beginning at the value which was being displayed. The rate at which incrementing and decrement occurs is one unit value per set temperature detent position.

HVAC SYSTEM POINTER		
Pointer Number	DESCRIPTION	Value Displayed
01	A/C Enable	0 or 1
		0 = disabled 1 = enabled
02	Final fan PWM duty cycle	0 to 255
	While the value of this pointer is being displayed, turning the right set temperature control either direction will manually control the value. CW = increase; CCW = decrease	
03	Left NPRG *	0 to 255
* NPRG equals a calculated number based on outside and in-vehicle conditions. This value is used by the AZC to position the Mode motor, Air Inlet motor, and control blower motor speed.		
	While the value of this pointer is being displayed, turning the right set temperature control either direction will manually control the value. CW = increase; CCW = decrease	
04	Right NPRG	0 to 255
	While the value of this pointer is being displayed, turning the right set temperature control either direction will manually control the value. CW = increase; CCW = decrease	

A/C HEATER CONTROL (Continued)

HVAC SYSTEM POINTER		
05	Avg NPRG	0 TO 255
	While the value of this pointer is being displayed, turning the right set temperature control either direction will manually control the value. CW = increase; CCW = decrease	
06	Primary control side	0 or 1
		0 = left 1 = right
07	EE Check sum (calculated)	0 to 255
08	Target intensity (in % ON time)	0 to 255
	While the value of this pointer is being displayed, turning the right set temperature control either direction will manually control the value. CW = increase; CCW = decrease	
09	Not Used	0 to 0
10	Not Used	0 to 0
11	Right NINC *	0 to 255
* NINC equals a calculated number based on the IR sensor and IR thermistor values used to calculate the NPRG.		
	While the value of this pointer is being displayed, turning the right set temperature control either direction will manually control the value. CW = increase; CCW = decrease	
12	Left NINC	0 to 255
	While the value of this pointer is being displayed, turning the right set temperature control either direction will manually control the value. CW = increase; CCW = decrease	
13	Right NMIX *	0 to 255
* NMIX equals a calculated number based on outside and in-vehicle conditions used by the AZC to position the Temperature motors.		
	While the value of this pointer is being displayed, turning the right set temperature control either direction will manually control the value. CW = increase; CCW = decrease	

HVAC SYSTEM POINTER		
14	Left NMIX	0 to 255
	While the value of this pointer is being displayed, turning the right set temperature control either direction will manually control the value. CW = increase; CW = decrease	
15	Not Used	0 to 0
16	Not Used	0 to 0
17	Reserved	
18	Reserved	
19	Reserved	

MODE VALUE POINTER		
Pointer Number	DESCRIPTION	Value Displayed
20	mode range in delta counts	0 to 9999
21	Current mode position (in counts)	0 to 9999
22	mode target position in ratio	0 to 255
	While the value of this pointer is being displayed, turning the right set temperature control either direction will manually control the value. CW = increase; CCW = decrease	
23	mode target position in counts	0 to 9999
24	Not Used	0 to 0
25	number of valve moves since last index	0 to 9999
26	Not Used	0 to 0
27	Not Used	0 to 0
28	Not Used	0 to 0
29	mode motor state	0 to 5
	0 = in position, 1 = moving toward panel, 2 = moving toward defrost, 3 = searching range, 4 = stalled moving toward panel, 5 = stalled moving toward defrost	

A/C HEATER CONTROL (Continued)

LEFT SIDE TEMPERATURE POINTER		
Pointer Number	DESCRIPTION	Value Displayed
30	Left side temp range in delta counts	0 to 9999
31	Current left side temp position (in counts)	0 to 9999
32	Left side temp target position (in ratio)	0 to 255
	While the value of this pointer is being displayed, turning the right set temperature control either direction will manually control the value. CW = increase; CCW = decrease	
33	Left side temp target in counts	0 to 9999
34	Not used	0 to 0
35	number of valve moves since last index	0 to 9999
36	Not used	0 to 0
37	Not used	0 to 0
38	Not used	0 to 0
39	Left side temp motor state	0 to 5
	0 = in position, 1 = moving toward panel, 2 = moving toward defrost, 3 = searching range, 4 = stalled moving toward panel, 5 = stalled moving toward defrost	

RIGHT SIDE TEMPERATURE POINTER		
Pointer Number	DESCRIPTION	Value Displayed
40	Right side temp range in delta counts	0 to 9999
41	Current right side temp position (in counts)	0 to 9999
42	Right side temp target position (in ratio)	0 to 255
	While the value of this pointer is being displayed, turning the right set temperature control either direction will manually control the value. CW = increase; CCW = decrease	
43	Right side temp target in counts	0 to 9999
44	Not used	0 to 0
45	number of valve moves since last index	0 to 9999
46	Not used	0 to 0
47	Not used	0 to 0
48	Not used	0 to 0
49	Right side temp motor state	0 to 5
	0 = in position, 1 = moving toward panel, 2 = moving toward defrost, 3 = searching range, 4 = stalled moving toward panel, 5 = stalled moving toward defrost	

AIR INLET POINTER		
Pointer Number	DESCRIPTION	Value Displayed
50	Air inlet range (in counts)	0 to 9999
51	Current air inlet position (in counts)	0 to 9999
52	Air inlet target position (in ratio)	0 to 255
	While the value of this pointer is being displayed, turning the right set temperature control either direction will manually control the value. CW = increase; CCW = decrease	
53	Air inlet target in counts	0 to 9999
54	Not used	0 to 0
55	number of motor moves since last index	0 to 9999
56	Not used	0 to 0
57	Not used	0 to 0
58	Not used	0 to 0
59	Air inlet motor state	0 to 5
	0 = in position, 1 = moving toward panel, 2 = moving toward defrost, 3 = searching range, 4 = stalled moving toward panel, 5 = stalled moving toward defrost	
60	Reserved	
61	Actual Outside Air Temp (in degrees F)	-40 to 215
62	Not used	0 to 0

A/C HEATER CONTROL (Continued)

AIR INLET POINTER		
63	Engine Intake Air Temperature (in degrees F)	-40 to 215
64	Vehicle speed in MPH	0 to 255
65	Engine RPM/100	-0 to 82
66	Engine Coolant Temp - 40 (in degrees F)	-40 to 215
67	Country Code	0 to 255
68	Not used	0 to 0
69	Not used	0 to 0

IR SENSOR POINTER		
Pointer Number	DESCRIPTION	Value Displayed
70	Thermistor temp (in degrees)	-40 to 215
71	Left side sensor A/D (filtered)	0 to 255
72	Right side sensor A/D (filtered)	0 to 255
73	Left side temp (in degrees F)	-40 to 140
74	Right side temp (in degrees F)	-40 to 140
75	Not used	0 to 0
76	Not used	0 to 0
77	Not used	0 to 0
78	Not used	0 to 0
79	Not used	0 to 0

IDENTIFICATION POINTER		
Pointer Number	DESCRIPTION	Value Displayed
80	ROM bit pattern number (digits 1,2,3 & 4)	0 to 9999
81	ROM bit pattern number (digits 5,6,7 & 8)	0 to 9999
82	CAL bit pattern number (digits 1,2,3 & 4)	0 to 9999
83	CAL bit pattern number (digits 5,6,7 & 8)	0 to 9999
84	Not used	0 to 0
85	Not used	0 to 0
86	Not used	0 to 0
87	Not used	0 to 0
88	Not used	0 to 0
89	Not used	0 to 0

OUTPUT CIRCUIT/ACTUATOR TESTS

In the Output Circuit/Actuator Test mode, the output circuits can be viewed, monitored, overridden, and tested. If a failure occurs in an output circuit, test the circuit by overriding the system. Test the actuator through its full range of operation.

(1) To begin the Output Circuit/Actuator Tests you must be in the Select Test mode.

(2) With a “00” value displayed in the Test Selector and no stick man, turn the rotary temperature control knob until the test number you are looking for appears in the Test Selector display. See the Circuit Testing charts for a listing of the test numbers, test items, test types, system tested, and displayed values.

(3) To see the output value, depress the a/c or recirc button. The values displayed will represent the output from the AZC control module.

(4) To enter the actuator test, depress the a/c or recirc button. Then, rotate the right temperature set knob to the desired position.

REMOVAL

WARNING: ON VEHICLES EQUIPPED WITH AIRBAGS, DISABLE THE AIRBAG SYSTEM BEFORE ATTEMPTING ANY STEERING WHEEL, STEERING COLUMN, OR INSTRUMENT PANEL COMPONENT DIAGNOSIS OR SERVICE. DISCONNECT AND ISOLATE THE BATTERY NEGATIVE (GROUND) CABLE, THEN WAIT TWO MINUTES FOR THE AIRBAG SYSTEM CAPACITOR TO DISCHARGE BEFORE PERFORMING FURTHER DIAGNOSIS OR SERVICE. THIS IS THE ONLY SURE WAY TO DISABLE THE AIRBAG SYSTEM. FAILURE TO TAKE THE PROPER PRECAUTIONS COULD RESULT IN AN ACCIDENTAL AIRBAG DEPLOYMENT AND POSSIBLE PERSONAL INJURY.

(1) Disconnect and isolate the battery negative cable.

(2) Remove the center upper, and center lower bezels from the instrument panel. Refer to Instrument Panel System for the procedures.

(3) Remove the 4 screws that secure the a/c heater control to the instrument panel (Fig. 13).

(4) Pull the a/c heater control assembly away from the instrument panel far enough to access the connections on the back of the control.

(5) Unplug the wire and/or vacuum harness connectors from the back of the a/c heater control (Fig. 14).

(6) Remove the a/c heater control from the instrument panel.

A/C HEATER CONTROL (Continued)

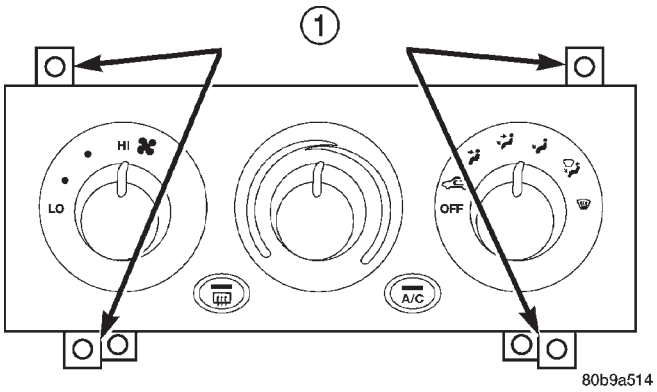

Fig. 13 A/C HEATER CONTROL REMOVE/INSTALL

1 - MOUNTING SCREW TABS

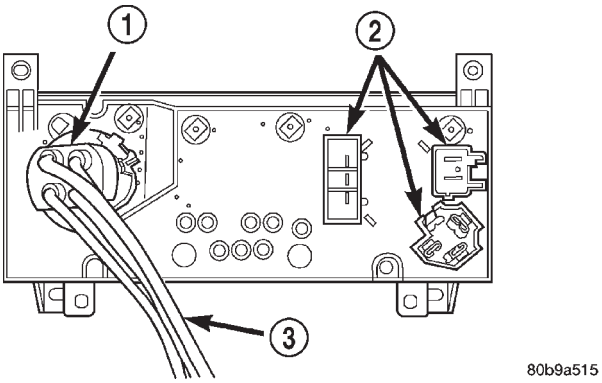

Fig. 14 A/C HEATER CONTROL CONNECTIONS

1 - MODE SWITCH
2 - ELECTRICAL CONNECTIONS
3 - VACUUM HARNESS

INSTALLATION

(1) Plug the wire harness and/or vacuum harness connectors into the back of the a/c heater control.

(2) Position the a/c heater control in the instrument panel and secure it with 4 screws. Tighten the screws to 2.2 N·m (20 in. lbs.).

(3) Reinstall the center upper, and center lower bezels onto the instrument panel. Refer to Instrument Panel System for the procedures.

(4) Connect the battery negative cable.

A/C HIGH PRESSURE SWITCH

DESCRIPTION

The a/c high pressure switch is located in the discharge line near the condenser. The switch is screwed onto a fitting that contains a Schrader-type valve, which allows the switch to be serviced without discharging the refrigerant system. The discharge line fitting is equipped with an O-ring to seal the switch connection.

OPERATION

The high pressure switch is connected in series electrically with the low pressure switch between ground and the Powertrain Control Module (PCM). The switch contacts open and close causing the PCM to turn the compressor clutch on and off. This prevents compressor operation when the discharge line pressure approaches high levels.

The high pressure switch contacts are open when the discharge line pressure rises above 3100 to 3375 kPa (450 to 490 psi). The switch contacts will close when the discharge line pressure drops to 1860 to 2275 kPa (270 to 330 psi).

The high pressure switch is a factory-calibrated unit. The switch cannot be adjusted or repaired and, if faulty or damaged, it must be replaced.

DIAGNOSIS AND TESTING - A/C HIGH PRESSURE SWITCH

Before performing diagnosis of the high pressure switch, verify that the refrigerant system has the correct refrigerant charge.

For circuit descriptions and diagrams, refer to the appropriate wiring information.

(1) Disconnect and isolate the battery negative cable.

(2) Unplug the wire harness connector from the high pressure switch on the refrigerant system fitting.

(3) Check for continuity between the two terminals of the high pressure switch. There should be continuity. If OK, test and repair the a/c switch sense circuit as required. If not OK, replace the faulty switch.

REMOVAL

(1) Disconnect and isolate the battery negative cable.

(2) Unplug the wire harness connector from the high pressure switch, which is mounted to a fitting on the discharge line near the condenser inlet.

(3) Unscrew the high pressure switch from the discharge line fitting.

(4) Remove the high pressure switch from the vehicle.

(5) Remove the O-ring seal from the discharge line fitting and discard.

INSTALLATION

(1) Lubricate a new O-ring seal with clean refrigerant oil and install it on the discharge line fitting. Use only the specified O-rings as they are made of a special material for the R-134a system. Use only refrigerant oil of the type recommended for the compressor in the vehicle.

A/C HIGH PRESSURE SWITCH (Continued)

(2) Install and tighten the high pressure switch on the discharge line fitting. The switch should be hand-tightened onto the line fitting.

(3) Plug the wire harness connector into the high pressure switch.

(4) Connect the battery negative cable.

A/C LOW PRESSURE SWITCH

DESCRIPTION

The low pressure switch is located on the top of the accumulator. The switch is screwed onto an accumulator fitting that contains a Schrader-type valve, which allows the switch to be serviced without discharging the refrigerant system. The accumulator fitting is equipped with an O-ring to seal the switch connection.

OPERATION

The low pressure switch is connected in series electrically with the high pressure switch, between ground and the Powertrain Control Module (PCM). The switch contacts open and close causing the PCM to turn the compressor clutch on and off. This regulates the refrigerant system pressure and controls evaporator temperature. Controlling the evaporator temperature prevents condensate water on the evaporator fins from freezing and obstructing air conditioning system air flow.

The low pressure switch contacts are open when the suction pressure is approximately 152 kPa (22 psi) or lower. The switch contacts will close when the suction pressure rises to approximately 234 to 262 kPa (34 to 38 psi) or above. Lower ambient temperatures, below approximately -1° C (30° F), will also cause the switch contacts to open. This is due to the pressure/temperature relationship of the refrigerant in the system.

The low pressure switch is a factory-calibrated unit. It cannot be adjusted or repaired and, if faulty or damaged, it must be replaced.

DIAGNOSIS AND TESTING - A/C LOW PRESSURE SWITCH

Before performing diagnosis of the low pressure switch, be certain that the switch is properly installed on the accumulator fitting. If the switch is too loose it may not open the Schrader-type valve in the accumulator fitting, which will prevent the switch from correctly monitoring the refrigerant system pressure.

Also verify that the refrigerant system has the correct refrigerant charge. (Refer to 24 - HEATING & AIR CONDITIONING/PLUMBING - STANDARD PROCEDURE - REFRIGERANT SYSTEM CHARGE)

For circuit descriptions and diagrams, refer to the appropriate wiring information.

(1) Disconnect and isolate the battery negative cable.

(2) Unplug the low pressure switch wire harness connector from the switch on the accumulator fitting.

(3) Install a jumper wire between the two cavities of the low pressure switch wire harness connector.

(4) Connect a manifold gauge set to the refrigerant system service ports. (Refer to 24 - HEATING & AIR CONDITIONING/PLUMBING - STANDARD PROCEDURE - REFRIGERANT SYSTEM SERVICE EQUIPMENT)

(5) Connect the battery negative cable.

(6) Set the a/c button on, and place the a/c heater mode control switch knob in any a/c position and start the engine.

(7) Check for continuity between the two terminals of the low pressure switch. There should be continuity with a suction pressure reading of 262 kPa (38 psi) or above, and no continuity with a suction pressure reading of 141 kPa (20.5 psi) or below. If OK, test and repair the A/C switch sense circuit as required. If not OK, replace the faulty switch.

REMOVAL

(1) Disconnect and isolate the battery negative cable.

(2) Unplug the wire harness connector from the low pressure cycling clutch switch on the top of the accumulator.

(3) Unscrew the a/c low pressure switch from the fitting on the top of the accumulator (Fig. 15).

(4) Remove the O-ring seal from the accumulator fitting and discard.

INSTALLATION

(1) Lubricate a new O-ring seal with clean refrigerant oil and install it on the accumulator fitting. Use only the specified O-rings as they are made of a special material for the R-134a system. Use only refrigerant oil of the type recommended for the compressor in the vehicle.

(2) Install and tighten the a/c low pressure switch on the accumulator fitting. The switch should be hand-tightened onto the accumulator fitting.

(3) Plug the wire harness connector into the low pressure cycling clutch switch.

(4) Connect the battery negative cable.

BLOWER MOTOR CONTROLLER (Continued)

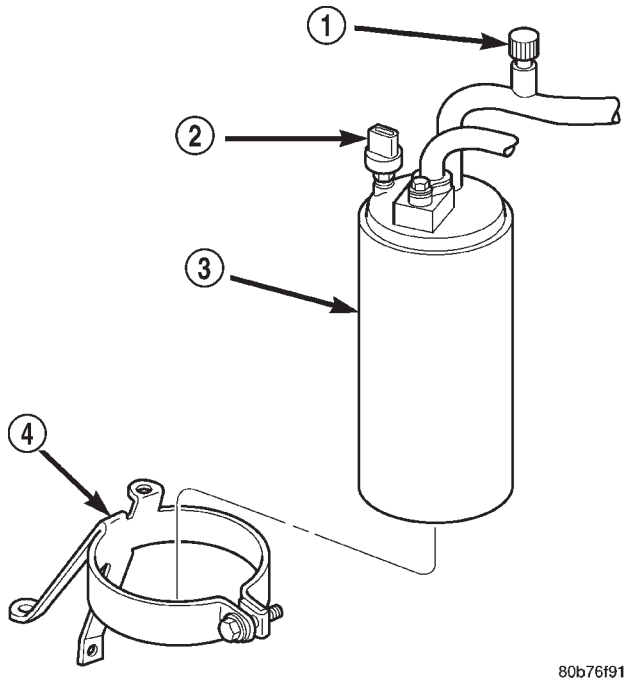

Fig. 15 ACCUMULATOR AND SUPPORT BRACKET

1 - SERVICE PORT
2 - LOW PRESSURE SWITCH
3 - ACCUMULATOR
4 - SUPPORT BRACKET

BLOWER MOTOR CONTROLLER

DESCRIPTION

Models equipped with the optional Automatic Zone Control (AZC) system have a blower motor controller. The controller allows the selection of almost infinitely variable blower motor speeds. The controller is mounted to the HVAC housing, under the instrument panel and just inboard of the blower motor, in the same location used for the blower motor resistor on manual temperature control systems. It can be accessed without removing any other components.

OPERATION

The blower motor controller output to the blower motor can be adjusted by the blower motor speed switch knob on the AZC A/C Heater control panel, or it can be adjusted automatically by the logic circuitry and programming of the AZC control module. In either case, the AZC control module sends the correct pulse width modulated signal to the blower motor controller to obtain the selected or programmed blower motor speed.

The blower motor controller cannot be repaired and, if faulty or damaged, it must be replaced.

REMOVAL

(1) Disconnect and isolate the battery negative cable.

(2) Depress locking tab and unplug the wire harness connector from the blower motor controller.

(3) Depress locking tab and unplug the controller connector from the blower motor.

(4) Remove the 2 screws that secure the blower motor controller to the HVAC housing.

(5) Remove the blower motor controller from the HVAC housing (Fig. 16).

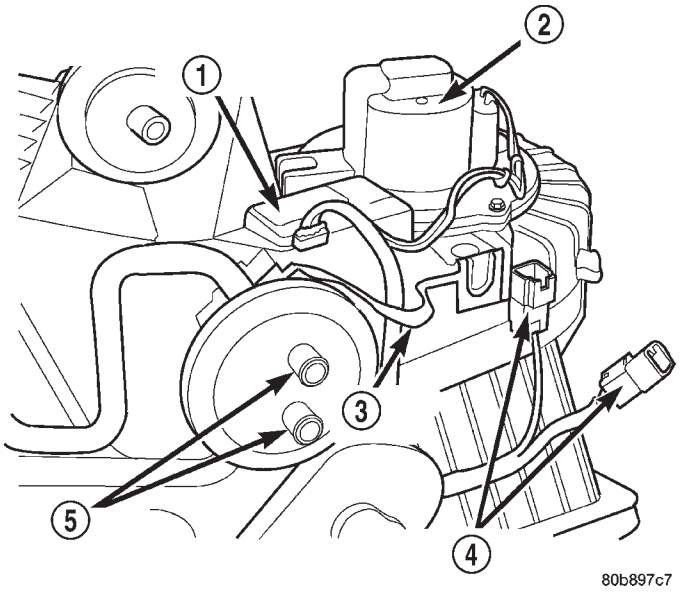

Fig. 16 BLOWER MOTOR CONTROLLER REMOVE/ INSTALL

1 - BLOWER MOTOR CONTROLLER
2 - BLOWER MOTOR
3 - GROUND STRAP
4 - ELECTRICAL CONNECTORS
5 - HEATER CORE TUBES

INSTALLATION

(1) Install the blower motor controller in the HVAC housing. The housing is indexed to allow controller mounting in only one position. Tighten the mounting screws to 2.2 N·m (20 in. lbs.).

(2) Plug in the wire harness connector to the blower motor controller.

(3) Plug in the connector from the blower motor controller to the blower motor.

(4) Connect the battery negative cable.

BLOWER MOTOR RESISTOR BLOCK

DESCRIPTION

Models with the standard manual temperature control system have a blower motor resistor. The blower motor resistor is mounted to the bottom of the HVAC housing, under the instrument panel and just inboard of the blower motor. It can be accessed for service without removing any other components.

OPERATION

The resistor has multiple resistor wires, each of which will reduce the current flow to the blower motor to change the blower motor speed by changing the resistance in the blower motor ground path. The blower motor switch directs the ground path through the correct resistor wire to obtain the selected speed.

With the blower motor switch in the lowest speed position, the ground path for the motor is applied through all of the resistor wires. Each higher speed selected with the blower motor switch applies the blower motor ground path through fewer of the resistor wires, increasing the blower motor speed. When the blower motor switch is in the highest speed position, the blower motor resistor is bypassed and the blower motor receives a direct path to ground.

The blower motor resistor cannot be repaired and, if faulty or damaged, it must be replaced.

DIAGNOSIS AND TESTING - BLOWER MOTOR RESISTOR BLOCK

For circuit descriptions and diagrams, refer to the appropriate wiring information.

WARNING: ON VEHICLES EQUIPPED WITH AIRBAGS, DISABLE THE AIRBAG SYSTEM BEFORE ATTEMPTING ANY STEERING WHEEL, STEERING COLUMN, OR INSTRUMENT PANEL COMPONENT DIAGNOSIS OR SERVICE. DISCONNECT AND ISOLATE THE BATTERY NEGATIVE (GROUND) CABLE, THEN WAIT TWO MINUTES FOR THE AIRBAG SYSTEM CAPACITOR TO DISCHARGE BEFORE PERFORMING FURTHER DIAGNOSIS OR SERVICE. THIS IS THE ONLY SURE WAY TO DISABLE THE AIRBAG SYSTEM. FAILURE TO TAKE THE PROPER PRECAUTIONS COULD RESULT IN AN ACCIDENTAL AIRBAG DEPLOYMENT AND POSSIBLE PERSONAL INJURY.

(1) Disconnect and isolate the battery negative cable.

(2) Unplug the wire harness connector from the blower motor resistor.

(3) Check for continuity between each of the blower motor switch input terminals of the resistor and the resistor output terminal. In each case there should be continuity. If OK, repair the wire harness circuits between the blower motor switch and the blower motor resistor or blower motor as required. If not OK, replace the faulty blower motor resistor.

REMOVAL

(1) Disconnect and isolate the battery negative cable.

(2) Depress locking tab and unplug the wire harness connector from the blower motor resistor.

(3) Depress locking tab and unplug the resistor connector from the blower motor.

(4) Remove the 2 screws that secure the blower motor resistor to the HVAC housing.

(5) Remove the blower motor resistor from the HVAC housing (Fig. 17).

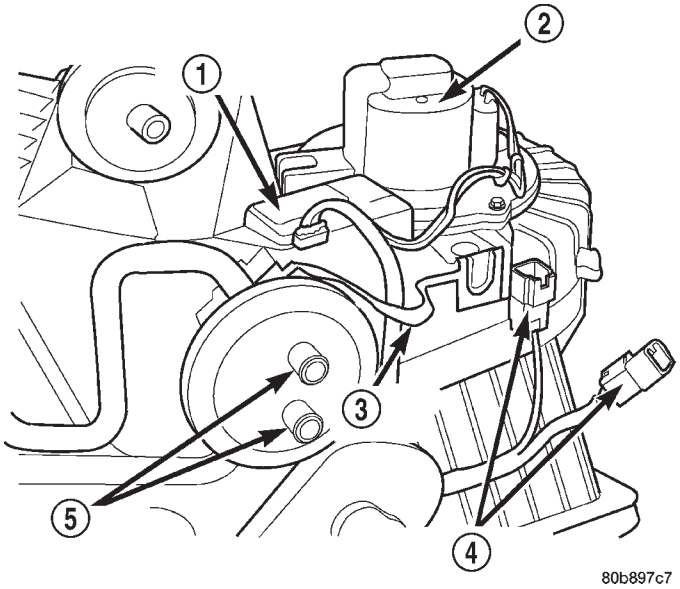

Fig. 17 BLOWER MOTOR RESISTOR REMOVE/ INSTALL

1 - BLOWER MOTOR RESISTOR/CONTROLLER
2 - BLOWER MOTOR
3 - GROUND STRAP
4 - ELECTRICAL CONNECTORS
5 - HEATER CORE TUBES

INSTALLATION

(1) Install the blower motor resistor in the HVAC housing. The housing is indexed to allow mounting in only one position. Tighten the mounting screws to 2.2 N·m (20 in. lbs.).

(2) Plug in the wire harness connector to the blower motor resistor.

(3) Plug in the connector from the blower motor resistor to the blower motor.

BLOWER MOTOR RESISTOR BLOCK (Continued)

(4) Connect the battery negative cable.

BLOWER MOTOR SWITCH

DESCRIPTION

The A/C Heater blower motor is controlled by a rotary-type blower motor switch, mounted in the A/C Heater control panel. On vehicles with manual temperature control systems, the switch allows the selection of four blower motor speeds, but will only operate with the ignition switch in the On position and the A/C Heater mode control switch in any position, except Off. On vehicles with the Automatic Zone Control (AZC) systems, the switch allows the selection of Lo Auto, Hi Auto, and ten speed settings between Lo and Hi.

OPERATION

On manual temperature control systems, the blower motor switch is connected in series with the blower motor ground path through the a/c heater mode control switch. The blower motor switch directs this ground path to the blower motor through the blower motor resistor wires, or directly to the blower motor, as required to achieve the selected blower motor speed.

On AZC systems, the blower motor switch is just one of many inputs to the AZC control module. In the manual blower modes, the AZC control module adjusts the blower motor speed through the blower motor controller as required to achieve the selected blower switch position. In the auto blower modes, the AZC control assembly is programmed to select and adjust the blower motor speed through the blower motor controller as required to achieve and maintain the selected comfort level.

The blower motor switch cannot be repaired and, if faulty or damaged, it must be replaced. The switch is serviced only as a part of the a/c heater control assembly.

DIAGNOSIS AND TESTING - BLOWER MOTOR SWITCH-MANUAL TEMPERATURE CONTROL SYSTEM

For circuit descriptions and diagrams, refer to the appropriate wiring information.

WARNING: ON VEHICLES EQUIPPED WITH AIRBAGS, DISABLE THE AIRBAG SYSTEM BEFORE ATTEMPTING ANY STEERING WHEEL, STEERING COLUMN, OR INSTRUMENT PANEL COMPONENT DIAGNOSIS OR SERVICE. DISCONNECT AND ISOLATE THE BATTERY NEGATIVE (GROUND) CABLE, THEN WAIT TWO MINUTES FOR THE AIRBAG SYSTEM CAPACITOR TO DISCHARGE BEFORE PERFORMING FURTHER DIAGNOSIS OR SERVICE. THIS IS THE ONLY SURE WAY TO DISABLE THE AIRBAG SYSTEM. FAILURE TO TAKE THE PROPER PRECAUTIONS COULD RESULT IN AN ACCIDENTAL AIRBAG DEPLOYMENT AND POSSIBLE PERSONAL INJURY.

(1) Check for battery voltage at the fuse in the Power Distribution Center (PDC). If OK, go to Step 2. If not OK, repair the shorted circuit or component as required and replace the faulty fuse.

(2) Turn the ignition switch to the Off position. Disconnect and isolate the battery negative cable. Remove the a/c heater control from the instrument panel. (Refer to 24 - HEATING & AIR CONDITIONING/CONTROLS/A/C HEATER CONTROL - REMOVAL) Check for continuity between the ground circuit cavity of the a/c heater control wire harness connector and a good ground. There should be continuity. If OK, go to Step 3. If not OK, repair the open circuit to ground as required.

(3) With the a/c heater control wire harness connector unplugged, place the a/c heater mode control switch knob in any position except the Off position. Check for continuity between the ground circuit terminal and each of the blower motor driver circuit terminals of the a/c heater control as you move the blower motor switch knob to each of the four speed positions. There should be continuity at each driver circuit terminal in only one blower motor switch speed position. If OK, test and repair the blower driver circuits between the a/c heater control connector and the blower motor resistor as required. If not OK, replace the faulty a/c heater control unit.

REMOVAL

WARNING: ON VEHICLES EQUIPPED WITH AIRBAGS, DISABLE THE AIRBAG SYSTEM BEFORE ATTEMPTING ANY STEERING WHEEL, STEERING COLUMN, OR INSTRUMENT PANEL COMPONENT DIAGNOSIS OR SERVICE. DISCONNECT AND ISOLATE THE BATTERY NEGATIVE (GROUND) CABLE, THEN WAIT TWO MINUTES FOR THE AIRBAG SYSTEM CAPACITOR TO DISCHARGE BEFORE PERFORMING FURTHER DIAGNOSIS OR SERVICE. THIS IS THE ONLY SURE WAY TO DISABLE THE AIRBAG SYSTEM. FAILURE TO TAKE THE PROPER PRECAUTIONS COULD RESULT IN AN ACCIDENTAL AIRBAG DEPLOYMENT AND POSSIBLE PERSONAL INJURY.

The blower motor switch cannot be adjusted or repaired, and if faulty or damaged, the a/c heater control must be replaced. (Refer to 24 - HEATING & AIR CONDITIONING/CONTROLS/A/C HEATER CONTROL - REMOVAL)

IN-CAR TEMPERATURE SENSOR

DESCRIPTION

Models equipped with the optional Automatic Zone Control (AZC) system use automatic dual zone temperature control with infrared sensing technology. The temperature sensor is located in the center instrument panel, between the dual temperature knobs of the AZC.

OPERATION

The Automatic Zone Control uses infrared sensing technology to control occupant comfort levels, not the actual passenger compartment air temperature. Dual infrared sensors mounted in the face of the control unit independently measure the surface temperature to maintain customer-perceived comfort temperature under changing conditions. Dual Zone temperature control provides wide side-to-side variation in comfort temperature to exceed the needs of either front seat occupant. This sensing system replaces interior air temperature and solar sensors used to approximate direct sensing control through complex control programs.

The infrared temperature sensor cannot be adjusted or repaired and, if faulty or damaged, the AZC head must be replaced.

NOTE: The infrared sensor window may be permanently damaged if any type of cosmetic vinyl dressings are allowed to contact the lens. Avoid spraying or wiping this area with any cleaner or conditioner. This may result in impaired temperature sensing and control.

REMOVAL

The infrared temperature sensor cannot be adjusted or repaired and, if faulty or damaged, the AZC head must be replaced. (Refer to 24 - HEATING & AIR CONDITIONING/CONTROLS/A/C HEATER CONTROL - REMOVAL)

BLEND DOOR ACTUATOR

DESCRIPTION

The blend door for all models is actuated by an electric actuator, while the AZC system uses 2 separate actuators to allow the driver and passenger to select individual comfort levels. In the following procedures, service for both types of actuators is covered.

REMOVAL

WARNING: ON VEHICLES EQUIPPED WITH AIRBAGS, DISABLE THE AIRBAG SYSTEM BEFORE ATTEMPTING ANY STEERING WHEEL, STEERING COLUMN, OR INSTRUMENT PANEL COMPONENT DIAGNOSIS OR SERVICE. DISCONNECT AND ISOLATE THE BATTERY NEGATIVE (GROUND) CABLE, THEN WAIT TWO MINUTES FOR THE AIRBAG SYSTEM CAPACITOR TO DISCHARGE BEFORE PERFORMING FURTHER DIAGNOSIS OR SERVICE. THIS IS THE ONLY SURE WAY TO DISABLE THE AIRBAG SYSTEM. FAILURE TO TAKE THE PROPER PRECAUTIONS COULD RESULT IN AN ACCIDENTAL AIRBAG DEPLOYMENT AND POSSIBLE PERSONAL INJURY.

The blend door actuator is used on all models, whether equipped with manual or Automatic Zone Control (AZC). This actuator is located on the front of the HVAC housing to the right of the floor panel transmission tunnel, and can be removed from the passenger compartment without instrument panel or HVAC housing removal.

(1) Disconnect and isolate the battery negative cable.

(2) Remove the glove box door. Refer to Instrument Panel System for the procedures.

(3) Remove the lower I/P glove box door surround panel. Refer to Instrument Panel System for the procedures.

(4) Unplug the wire harness connector from the blend door actuator (Fig. 18).

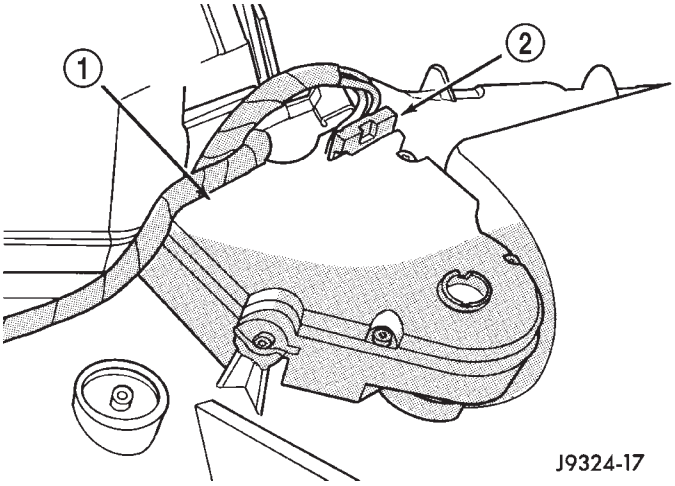

Fig. 18 BLEND DOOR ACTUATOR

1 - BLEND DOOR ACTUATOR
2 - ELECTRICAL CONNECTOR

BLEND DOOR ACTUATOR (Continued)

(5) Remove the 2 screws that secure the blend door actuator to the HVAC housing.

(6) Remove the blend door actuator from the HVAC housing.

INSTALLATION

(1) Install the blend door actuator on the HVAC housing and tighten the two mounting screws to 2.2 N·m (20 in. lbs.).

(2) Plug in the wire harness connector to the blend door actuator.

(3) Install the glove box door. Refer to Instrument Panel System for the procedures.

(4) Install the lower I/P glove box door surround panel. Refer to Instrument Panel System for the procedures.

(5) Connect and the battery negative cable.

MODE DOOR ACTUATOR

DESCRIPTION

The mode door actuators for vehicles equipped with the standard equipment manual temperature control system are vacuum controlled. The optional Automatic Zone Control (AZC) system uses electric motors to actuate all mode doors. The service procedures for both types of actuators are covered by the following procedures.

REMOVAL - HEAT/DEFROST - PANEL/DEFROST DOOR ELECTRIC ACTUATOR

WARNING: ON VEHICLES EQUIPPED WITH AIRBAGS, DISABLE THE AIRBAG SYSTEM BEFORE ATTEMPTING ANY STEERING WHEEL, STEERING COLUMN, OR INSTRUMENT PANEL COMPONENT DIAGNOSIS OR SERVICE. DISCONNECT AND ISOLATE THE BATTERY NEGATIVE (GROUND) CABLE, THEN WAIT TWO MINUTES FOR THE AIRBAG SYSTEM CAPACITOR TO DISCHARGE BEFORE PERFORMING FURTHER DIAGNOSIS OR SERVICE. THIS IS THE ONLY SURE WAY TO DISABLE THE AIRBAG SYSTEM. FAILURE TO TAKE THE PROPER PRECAUTIONS COULD RESULT IN AN ACCIDENTAL AIRBAG DEPLOYMENT AND POSSIBLE PERSONAL INJURY.

These actuators are used only on models equipped with the optional Automatic Zone Control (AZC) system.

(1) Disconnect and isolate the battery negative cable.

(2) Remove the two bolts that secure the center instrument panel support bracket to the left side of the floor panel transmission tunnel.

(3) Remove the two bolts that secure the center instrument panel support bracket to the instrument panel.

(4) Remove the center instrument panel support bracket from the vehicle.

(5) Unplug the wire harness connector from the heat/defrost - panel/defrost door actuator (Fig. 19).

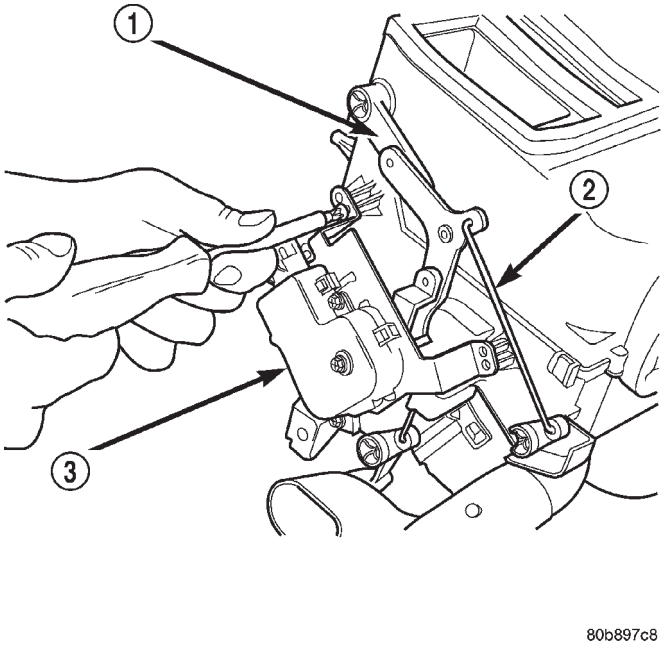

Fig. 19 HEAT/DEFROST - PANEL/DEFROST DOOR ACTUATOR

1 - LEVER ASSEMBLY
2 - LINKAGE
3 - ELECTRIC ACTUATOR

(6) Remove the three screws that secure the heat/defrost-panel/defrost door motor to the HVAC housing.

(7) Remove the heat/defrost-panel/defrost door motor from the HVAC housing.

MODE DOOR ACTUATOR (Continued)

REMOVAL - HEAT/DEFROST DOOR VACUUM ACTUATOR

WARNING: ON VEHICLES EQUIPPED WITH AIRBAGS, DISABLE THE AIRBAG SYSTEM BEFORE ATTEMPTING ANY STEERING WHEEL, STEERING COLUMN, OR INSTRUMENT PANEL COMPONENT DIAGNOSIS OR SERVICE. DISCONNECT AND ISOLATE THE BATTERY NEGATIVE (GROUND) CABLE, THEN WAIT TWO MINUTES FOR THE AIRBAG SYSTEM CAPACITOR TO DISCHARGE BEFORE PERFORMING FURTHER DIAGNOSIS OR SERVICE. THIS IS THE ONLY SURE WAY TO DISABLE THE AIRBAG SYSTEM. FAILURE TO TAKE THE PROPER PRECAUTIONS COULD RESULT IN AN ACCIDENTAL AIRBAG DEPLOYMENT AND POSSIBLE PERSONAL INJURY.

This actuator is used only on models equipped with the standard manual temperature control system.

(1) Remove the HVAC housing from the vehicle. (Refer to 24 - HEATING & AIR CONDITIONING/ DISTRIBUTION/HVAC HOUSING - REMOVAL)

(2) Unplug the vacuum harness connector from the heat/defrost door vacuum actuator (Fig. 20).

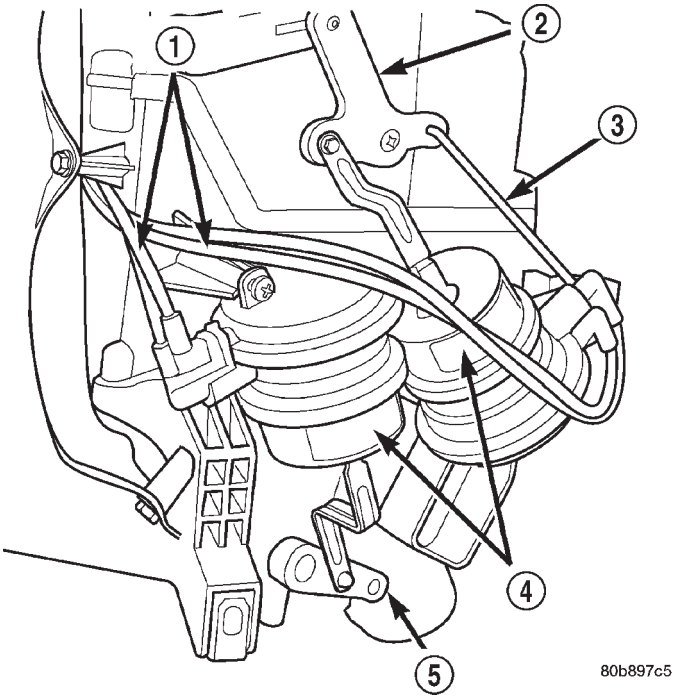

Fig. 20 MODE DOOR ACTUATORS-MANUAL SYSTEM

1 - VACUUM LINES
2 - ACTUATING LEVERS
3 - LINKAGE
4 - VACUUM ACTUATORS
5 - ACTUATING LEVER

(3) Disengage the heat/defrost door pivot connection from the heat/defrost door pivot pin.

(4) Remove the screws that secure the heat/defrost door vacuum actuator to the HVAC housing.

(5) Remove the heat/defrost door vacuum actuator from the HVAC housing.

REMOVAL - PANEL/DEFROST DOOR VACUUM ACTUATOR

WARNING: ON VEHICLES EQUIPPED WITH AIRBAGS, DISABLE THE AIRBAG SYSTEM BEFORE ATTEMPTING ANY STEERING WHEEL, STEERING COLUMN, OR INSTRUMENT PANEL COMPONENT DIAGNOSIS OR SERVICE. DISCONNECT AND ISOLATE THE BATTERY NEGATIVE (GROUND) CABLE, THEN WAIT TWO MINUTES FOR THE AIRBAG SYSTEM CAPACITOR TO DISCHARGE BEFORE PERFORMING FURTHER DIAGNOSIS OR SERVICE. THIS IS THE ONLY SURE WAY TO DISABLE THE AIRBAG SYSTEM. FAILURE TO TAKE THE PROPER PRECAUTIONS COULD RESULT IN AN ACCIDENTAL AIRBAG DEPLOYMENT AND POSSIBLE PERSONAL INJURY.

This actuator is used only on models equipped with the standard manual temperature control system.

(1) Remove the HVAC housing from the vehicle. (Refer to 24 - HEATING & AIR CONDITIONING/ DISTRIBUTION/HVAC HOUSING - REMOVAL)

(2) Unplug the vacuum harness connector from the heat/defrost door vacuum actuator (Fig. 21).

(3) Disengage the panel/defrost door pivot connection from the panel/defrost door pivot pin.

(4) Remove the screws that secure the panel/defrost door vacuum actuator to the HVAC housing.

(5) Remove the panel/defrost door vacuum actuator from the HVAC housing.

INSTALLATION - HEAT/DEFROST - PANEL/ DEFROST DOOR ELECTRIC ACTUATOR

(1) Install the heat/defrost-panel/defrost door actuator on the HVAC housing, and tighten the three mounting screws to 2.2 N·m (20 in. lbs.).

(2) Plug in the wire harness connector to the heat/ defrost - panel/defrost door actuator.

(3) Install the center instrument panel support bracket on the vehicle.

(4) Install the two bolts that secure the center instrument panel support bracket to the instrument panel.

(5) Install the two bolts that secure the center instrument panel support bracket to the left side of the floor panel transmission tunnel.

(6) Connect the battery negative cable.

MODE DOOR ACTUATOR (Continued)

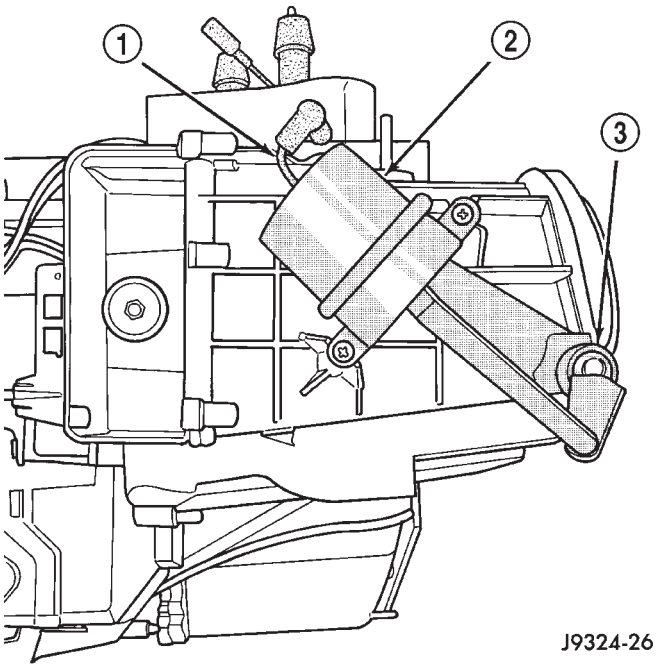

Fig. 21 PANEL/DEFROST DOOR ACTUATOR

1 - VACUUM LINE
2 - PANEL/DEFROST DOOR ACTUATOR
3 - SHAFT RETAINER

INSTALLATION - HEAT/DEFROST DOOR VACUUM ACTUATOR

(1) Install the heat/defrost door vacuum actuator on the HVAC housing and tighten the mounting screws to 2.2 N·m (20 in. lbs.).

(2) Engage the heat/defrost door pivot connection with the heat/defrost door pivot pin.

(3) Plug in the vacuum harness connector to the heat/defrost door vacuum actuator.

(4) Install the HVAC housing in the vehicle. (Refer to 24 - HEATING & AIR CONDITIONING/DISTRIBUTION/HVAC HOUSING - INSTALLATION)

INSTALLATION - PANEL/DEFROST DOOR VACUUM ACTUATOR

(1) Install the panel/defrost door vacuum actuator on the HVAC housing and tighten the mounting screws to 2.2 N·m (20 in. lbs.).

(2) Engage the panel/defrost door pivot connection with the panel/defrost door pivot pin.

(3) Plug in the vacuum harness connector to the heat/defrost door vacuum actuator.

(4) Install the HVAC housing in the vehicle. (Refer to 24 - HEATING & AIR CONDITIONING/DISTRIBUTION/HVAC HOUSING - INSTALLATION)

RECIRCULATION DOOR ACTUATOR

DESCRIPTION

The recirculation door actuator for vehicles equipped with the standard equipment manual temperature control system is vacuum controlled. The optional Automatic Zone Control (AZC) system uses an electric recirculation door actuator. In the following procedures, service for both types of actuators is covered.

REMOVAL - RECIRCULATION DOOR VACUUM ACTUATOR

WARNING: ON VEHICLES EQUIPPED WITH AIRBAGS, DISABLE THE AIRBAG SYSTEM BEFORE ATTEMPTING ANY STEERING WHEEL, STEERING COLUMN, OR INSTRUMENT PANEL COMPONENT DIAGNOSIS OR SERVICE. DISCONNECT AND ISOLATE THE BATTERY NEGATIVE (GROUND) CABLE, THEN WAIT TWO MINUTES FOR THE AIRBAG SYSTEM CAPACITOR TO DISCHARGE BEFORE PERFORMING FURTHER DIAGNOSIS OR SERVICE. THIS IS THE ONLY SURE WAY TO DISABLE THE AIRBAG SYSTEM. FAILURE TO TAKE THE PROPER PRECAUTIONS COULD RESULT IN AN ACCIDENTAL AIRBAG DEPLOYMENT AND POSSIBLE PERSONAL INJURY.

This actuator is used only on models equipped with the standard manual temperature control system.

(1) Remove the instrument panel from the vehicle. Refer to Instrument Panel System for the procedures.

(2) Unplug the vacuum harness connector from the recirculation door vacuum actuator.

(3) Disengage the recirculation door pivot connection from the door pivot pin.

(4) Disengage the recirculation door actuating rod from the recirculation door lever.

(5) Remove the screws that secure the recirculation door vacuum actuator to the HVAC housing.

(6) Remove the recirculation door vacuum actuator from the HVAC housing.

RECIRCULATION DOOR ACTUATOR (Continued)

REMOVAL - RECIRCULATION DOOR ELECTRIC ACTUATOR

WARNING: ON VEHICLES EQUIPPED WITH AIRBAGS, DISABLE THE AIRBAG SYSTEM BEFORE ATTEMPTING ANY STEERING WHEEL, STEERING COLUMN, OR INSTRUMENT PANEL COMPONENT DIAGNOSIS OR SERVICE. DISCONNECT AND ISOLATE THE BATTERY NEGATIVE (GROUND) CABLE, THEN WAIT TWO MINUTES FOR THE AIRBAG SYSTEM CAPACITOR TO DISCHARGE BEFORE PERFORMING FURTHER DIAGNOSIS OR SERVICE. THIS IS THE ONLY SURE WAY TO DISABLE THE AIRBAG SYSTEM. FAILURE TO TAKE THE PROPER PRECAUTIONS COULD RESULT IN AN ACCIDENTAL AIRBAG DEPLOYMENT AND POSSIBLE PERSONAL INJURY.

This actuator is used only on models equipped with the optional Automatic Zone Control (AZC) system.

(1) Remove the instrument panel from the vehicle. Refer to Instrument Panel System for the procedures.

(2) Unplug the wire harness connector from the recirculation door actuator.

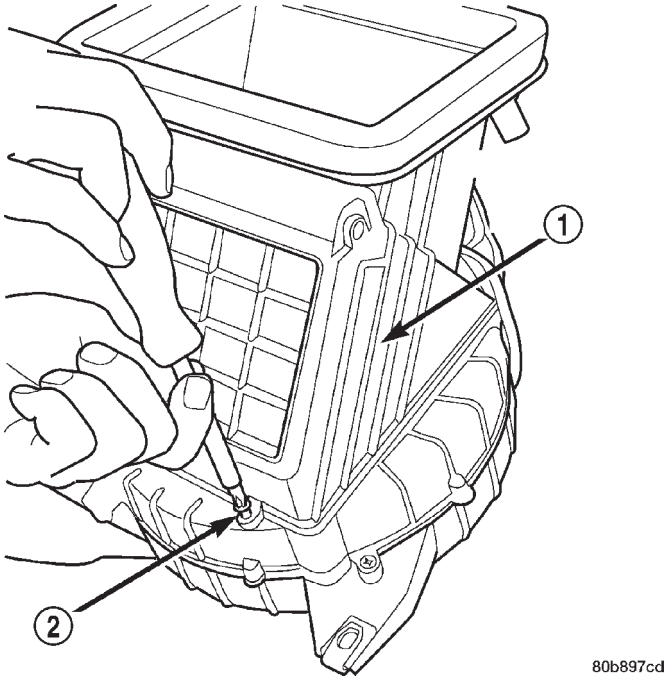

Fig. 22 RECIRCULATION DOOR HOUSING

1 - RECIRCULATION DOOR HOUSING
2 - ATTACHING SCREWS

(3) Remove the 2 screws securing the recirculation door housing to the HVAC unit (Fig. 22). Tilt the front of the housing up while reaching around the back releasing 2 tangs holding the rear of the housing down.

(4) Remove the recirculation door housing from the HVAC unit.

(5) Remove the screws that secure the recirculation door actuator to the HVAC housing.

(6) Remove the recirculation door actuator from the HVAC housing.

INSTALLATION - RECIRCULATION DOOR VACUUM ACTUATOR

(1) Install the recirculation door vacuum actuator on the HVAC housing and tighten the mounting screws to 2.2 N·m (20 in. lbs.).

(2) Engage the recirculation door actuating rod with the recirculation door lever.

(3) Engage the recirculation door pivot connection with the door pivot pin.

(4) Plug in the vacuum harness connector to the recirculation door vacuum actuator.

(5) Install the instrument panel in the vehicle. Refer to Instrument Panel System for the procedures.

INSTALLATION - RECIRCULATION DOOR ELECTRIC ACTUATOR

(1) Install the recirculation door actuator on the recirculation door housing and tighten the mounting screws to 2.2 N·m (20 in. lbs.).

(2) Install the recirculation door housing on the HVAC unit and tighten the mounting screws to 2.2 N·m (20 in. lbs.).

(3) Plug in the wire harness connector to the recirculation door actuator.

(4) Install the instrument panel in the vehicle. Refer to Instrument Panel System for the procedures.

VACUUM CHECK VALVE

DESCRIPTION

Two vacuum check valves (non AZC only) are installed on the vacuum supply system. One is on the accessory vacuum supply line in the engine compartment, near the vacuum tap on the engine intake manifold. A second vacuum check valve is located on the bottom of the HVAC unit behind the passenger front floor duct on the black vacuum line. The vacuum check valves are designed to allow vacuum to flow in only one direction through the accessory vacuum supply circuits.

OPERATION

The use of a vacuum check valve helps to maintain the system vacuum needed to retain the selected A/C Heater mode settings. The check valve will prevent the engine from bleeding down system vacuum through the intake manifold during extended heavy engine load (low engine vacuum) operation.

VACUUM CHECK VALVE (Continued)

The vacuum check valve cannot be repaired and, if faulty or damaged, it must be replaced.

REMOVAL

(1) Unplug the HVAC vacuum supply line connector at the vacuum check valve near the engine intake manifold vacuum adapter fitting.

(2) Note the orientation of the check valve in the vacuum supply line for correct installation.

(3) Unplug the vacuum check valve from the vacuum supply line fittings.

INSTALLATION

(1) Plug in the vacuum check valve at the vacuum supply line fittings, noting the orientation of the check valve in the vacuum supply line for correct installation.

(2) Plug in the HVAC vacuum supply line connector at the vacuum check valve near the engine intake manifold vacuum adapter fitting.

VACUUM RESERVOIR

DESCRIPTION

The vacuum reservoir is mounted in the right front of the vehicle behind the headlamp mounting module (Fig. 23). The headlamp mounting module and headlamp assembly must be removed from the vehicle to access the vacuum reservoir for service. Refer to Lamps/Lighting for the procedures.

OPERATION

Engine vacuum is stored in the vacuum reservoir. The stored vacuum is used to operate the vacuum-controlled vehicle accessories during periods of low engine vacuum such as when the vehicle is climbing a steep grade, or under other high engine load operating conditions.

The vacuum reservoir cannot be repaired and, if faulty or damaged, it must be replaced.

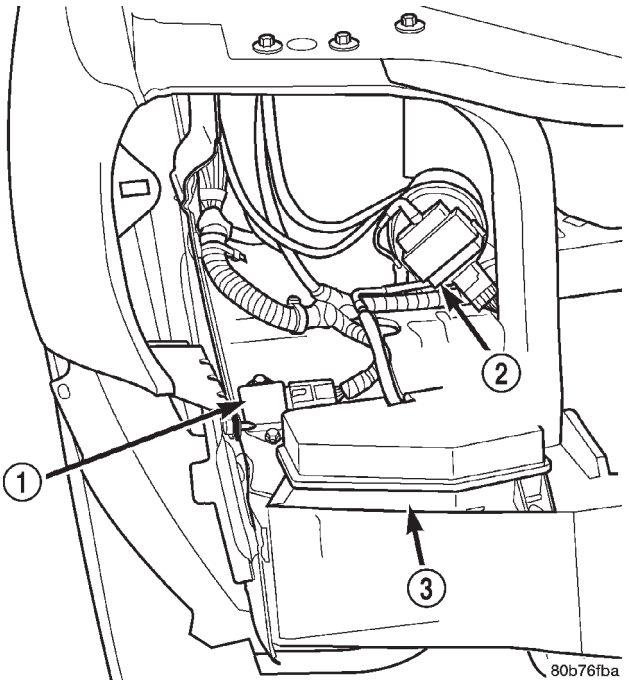

Fig. 23 VACUUM RESERVOIR

1 - FAN RELAY
2 - SPEED CONTROL SERVO
3 - VACUUM RESERVOIR

REMOVAL

(1) Remove the right side headlamp mounting module and headlamp assembly. Refer to Lamps/Lighting for the procedures.

(2) Remove the two screws that secure the vacuum reservoir to the base of the radiator closure panel.

(3) Remove the vacuum reservoir.

INSTALLATION

(1) Install the vacuum reservoir in the vehicle and tighten the two screws to 3.4 N·m (30 in. lbs.).

(2) Install the right side headlamp mounting module and headlamp assembly. Refer to Lamps/Lighting for the procedures.

DISTRIBUTION

TABLE OF CONTENTS

	page
AIR OUTLETS	
REMOVAL	36
INSTALLATION	36
BLOWER MOTOR	
DESCRIPTION	37
OPERATION	37
DIAGNOSIS AND TESTING	37
BLOWER MOTOR	37
REMOVAL	38
INSTALLATION	38
DEFROSTER DUCTS	
REMOVAL	38
INSTALLATION	39
FLOOR DISTRIBUTION DUCTS	
REMOVAL	39
INSTALLATION	39
INSTRUMENT PANEL DUCTS	
REMOVAL	39
INSTALLATION	39
REAR FLOOR HEAT DUCT	
REMOVAL	40
INSTALLATION	41
HVAC HOUSING	
REMOVAL	41
DISASSEMBLY	41
ASSEMBLY	44
INSTALLATION	45
BLEND DOOR	
REMOVAL	46
INSTALLATION	46
MODE DOOR	
REMOVAL	46
INSTALLATION	49
RECIRCULATION DOOR	
REMOVAL	49
INSTALLATION	50

AIR OUTLETS

REMOVAL

The driver side, and passenger side panel outlets are available for service. The center outlets are only serviced as part of the instrument cluster center bezel unit.

(1) Remove the instrument panel top pad from the instrument panel. Refer to Instrument Panel System for the procedures.

(2) Remove the two screws that secure each outlet to the backside of the instrument panel top pad (Fig. 1).

(3) Remove the outlet from the top pad.

INSTALLATION

(1) Fasten the outlet to the top pad. Tighten the mounting screws to 2.2 N·m (20 in. lbs.).

(2) Install the instrument panel top pad on the instrument panel. Refer to Instrument Panel System for the procedures.

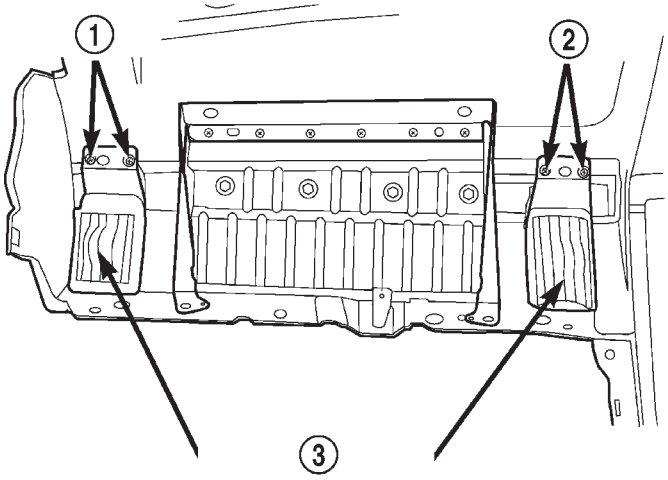

Fig. 1 PANEL OUTLETS (PASSENGER SIDE)

1 - MOUNTING SCREWS
2 - MOUNTING SCREWS
3 - PANEL OUTLETS

BLOWER MOTOR

DESCRIPTION

The blower motor and blower wheel are located in the passenger side end of the HVAC housing, below the glove box module. The blower motor controls the velocity of the air flowing through the HVAC housing by spinning a squirrel cage-type blower wheel within the housing at the selected speed. The blower motor and blower wheel can be serviced from the passenger compartment side of the housing.

OPERATION

The blower motor will only operate when the ignition switch is in the On position, and the a/c heater mode control switch is in any position, except off. The blower motor circuit is protected by a fuse in the junction block. On models with the standard manual temperature control system, the blower motor speed is controlled by regulating the battery feed through the blower motor switch and the blower motor resistor. On models with the optional Automatic Zone Control (AZC) system, the blower motor speed is controlled by using Pulse Width Modulation (PWM). The blower motor controller adjusts the battery feed voltage to the blower motor, based upon an input from the blower motor switch, through the AZC control module. Pulse width modulation of blower power allows the blower to operate at any speed from stationary, to full speed.

The blower motor and blower motor wheel cannot be repaired, and if faulty or damaged, they must be replaced. The blower motor and blower wheel are each serviced separately.

DIAGNOSIS AND TESTING - BLOWER MOTOR

WARNING: ON VEHICLES EQUIPPED WITH AIRBAGS, DISABLE THE AIRBAG SYSTEM BEFORE ATTEMPTING ANY STEERING WHEEL, STEERING COLUMN, OR INSTRUMENT PANEL COMPONENT DIAGNOSIS OR SERVICE. DISCONNECT AND ISOLATE THE BATTERY NEGATIVE (GROUND) CABLE, THEN WAIT TWO MINUTES FOR THE AIRBAG SYSTEM CAPACITOR TO DISCHARGE BEFORE PERFORMING FURTHER DIAGNOSIS OR SERVICE. THIS IS THE ONLY SURE WAY TO DISABLE THE AIRBAG SYSTEM. FAILURE TO TAKE THE PROPER PRECAUTIONS COULD RESULT IN AN ACCIDENTAL AIRBAG DEPLOYMENT AND POSSIBLE PERSONAL INJURY.

For circuit descriptions and diagrams, refer to the appropriate wiring information. Possible causes of an inoperative blower motor include:

- Faulty fuse
- Faulty blower motor circuit wiring or wire harness connections
- Faulty blower motor resistor (if the vehicle is so equipped)
- Faulty blower motor controller (if the vehicle is so equipped)
- Faulty blower motor switch
- Faulty a/c heater mode control switch
- Faulty blower motor.

Possible causes of the blower motor not operating in all speeds include:

- Faulty fuse
- Faulty blower motor switch
- Faulty blower motor resistor (if the vehicle is so equipped)
- Faulty blower motor controller (if the vehicle is so equipped)
- Faulty AZC module (if the vehicle is so equipped)
- Faulty blower motor circuit wiring or wire harness connections.

VIBRATION

Possible causes of blower motor vibration include:

- Improper blower motor mounting
- Improper blower wheel mounting
- Blower wheel out of balance or bent
- Blower motor faulty.

NOISE

To verify that the blower is the source of the noise, unplug the blower motor wire harness connector and operate the HVAC system. If the noise goes away, possible causes include:

- Foreign material in the HVAC housing
- Improper blower motor mounting
- Improper blower wheel mounting
- Blower motor faulty.

BLOWER MOTOR (Continued)

REMOVAL

WARNING: ON VEHICLES EQUIPPED WITH AIRBAGS, DISABLE THE AIRBAG SYSTEM BEFORE ATTEMPTING ANY STEERING WHEEL, STEERING COLUMN, OR INSTRUMENT PANEL COMPONENT DIAGNOSIS OR SERVICE. DISCONNECT AND ISOLATE THE BATTERY NEGATIVE (GROUND) CABLE, THEN WAIT TWO MINUTES FOR THE AIRBAG SYSTEM CAPACITOR TO DISCHARGE BEFORE PERFORMING FURTHER DIAGNOSIS OR SERVICE. THIS IS THE ONLY SURE WAY TO DISABLE THE AIRBAG SYSTEM. FAILURE TO TAKE THE PROPER PRECAUTIONS COULD RESULT IN AN ACCIDENTAL AIRBAG DEPLOYMENT AND POSSIBLE PERSONAL INJURY.

(1) Disconnect and isolate the battery negative cable.

(2) Pinch the connector retainer and unplug the blower motor wire harness from the blower motor (Fig. 2).

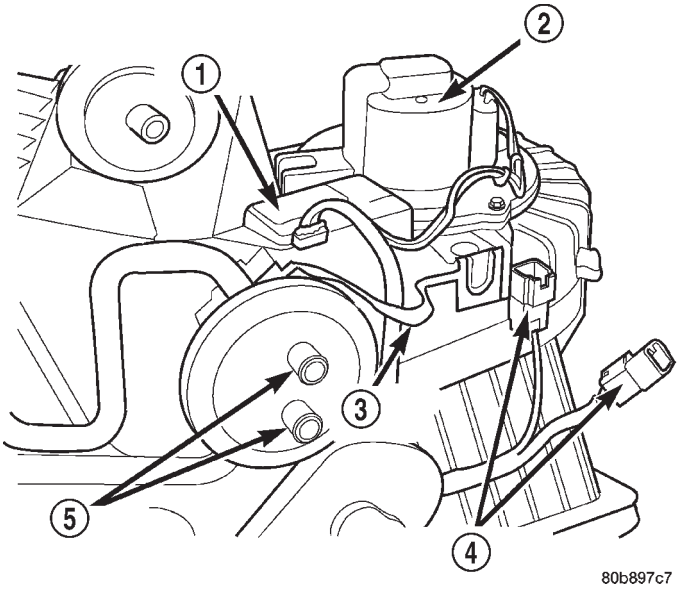

Fig. 2 BLOWER MOTOR (HOUSING REMOVED FROM VEHICLE)

1 - BLOWER MOTOR RESISTOR/CONTROLLER
2 - BLOWER MOTOR
3 - GROUND STRAP
4 - ELECTRICAL CONNECTORS
5 - HEATER CORE TUBES

(3) Remove the three screws that secure the blower motor and blower wheel assembly to the HVAC housing, using either a T-25 Torx® head or flat-bladed screwdriver.

(4) Lower the blower motor and wheel from the HVAC housing.

(5) Remove the blower wheel retainer clip (Fig. 3).

(6) Remove the wheel from the blower motor shaft.

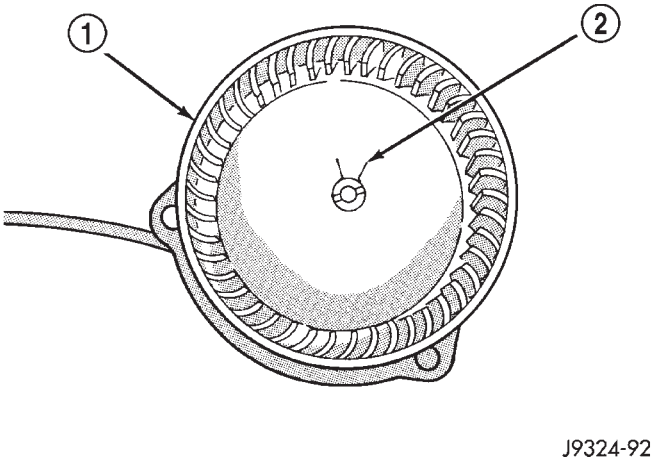

Fig. 3 BLOWER MOTOR WHEEL REMOVE/INSTALL

1 - BLOWER MOTOR WHEEL
2 - RETAINER CLIP

INSTALLATION

(1) Press the blower wheel hub onto the blower motor shaft. Be sure the flat on the blower motor shaft is indexed to the flat on the inside of the blower wheel hub.

(2) Install the retainer clip over the blower wheel hub.

(3) Install the blower motor in the HVAC housing with three mounting screws. Tighten the mounting screws to 2.2 N·m (20 in. lbs.).

(4) Plug the blower motor wire harness connector into the blower motor socket.

(5) Connect the battery negative cable.

DEFROSTER DUCTS

REMOVAL

(1) Remove the instrument panel assembly from the vehicle. See Instrument Panel System for the procedures.

(2) Remove the three screws that secure the defroster duct to the HVAC unit housing (Fig. 4).

DEFROSTER DUCTS (Continued)

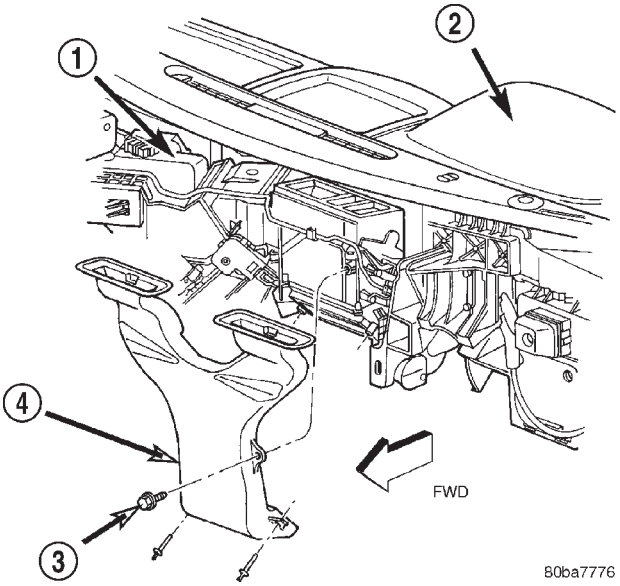

Fig. 4 HVAC DEFROSTER DUCT

1 - HVAC UNIT HOUSING
2 - INSTRUMENT PANEL
3 - SCREWS
4 - DEFROSTER DUCT

(3) Remove the defroster duct from the HVAC unit housing.

INSTALLATION

(1) Install the defroster duct on the HVAC unit housing.

(2) Install the three screws that secure the defroster duct to the HVAC unit housing. Tighten the mounting screws to 2.2 N·m (20 in. lbs.).

(3) Install the instrument panel assembly in the vehicle. See Instrument Panel System for the procedures.

FLOOR DISTRIBUTION DUCTS

REMOVAL

(1) To remove the driver side floor duct from the vehicle, remove the knee blocker panel for access to attaching screw. See Instrument Panel System for the procedures.

(2) The passenger side floor duct fastener can be accessed under the right-center instrument panel.

(3) Remove the screw that secures the floor duct(s) to the HVAC housing (Fig. 5).

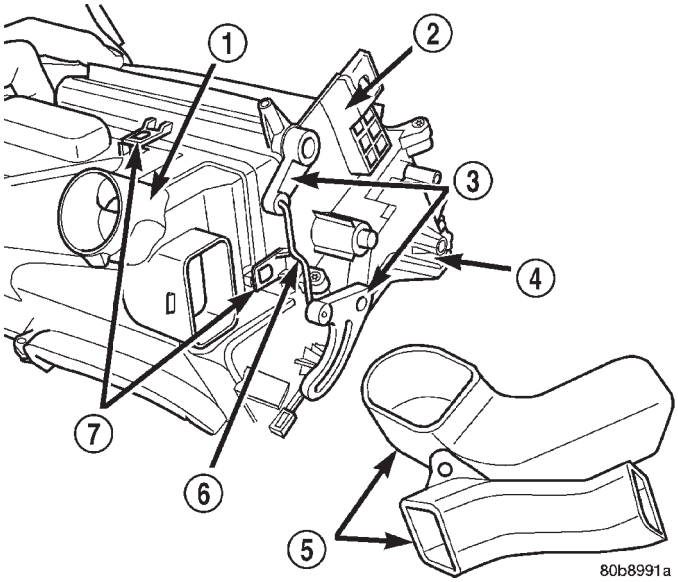

Fig. 5 FLOOR DUCTS (HOUSING REMOVED)

1 - FLOOR DUCT ADAPTER
2 - HEAT/DEFROST DOOR SUB-ASSEMBLY
3 - DOOR LEVERS
4 - LOWER HOUSING
5 - FLOOR DUCTS
6 - LINKAGE
7 - RETAINING TABS

INSTALLATION

(1) Attach the floor duct(s) to the HVAC housing.

(2) Install the screw that secures the floor duct(s) to the HVAC housing. Tighten the mounting screws to 2.2 N·m (20 in. lbs.).

(3) Install the knee blocker panel. See Instrument Panel System for the procedures.

INSTRUMENT PANEL DUCTS

REMOVAL

(1) Remove the instrument panel top pad from the vehicle. See Instrument Panel System for the procedure.

(2) Unsnap the duct extension(s) from the instrument panel structural duct assembly (Fig. 6).

(3) Remove the duct extension(s) from the instrument panel (Fig. 7).

INSTALLATION

(1) Connect the duct extension(s) to the instrument panel.

(2) Snap the duct extension(s) to the instrument panel structural duct assembly.

INSTRUMENT PANEL DUCTS (Continued)

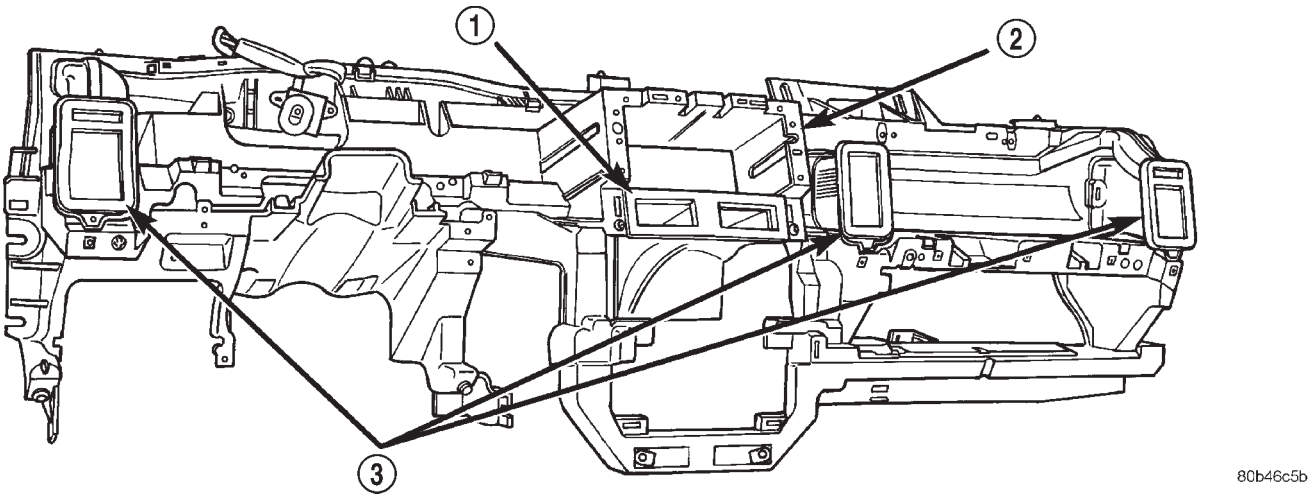

Fig. 6 INSTRUMENT PANEL STRUCTURAL DUCT ASSEMBLY

1 - CENTER DUCT
2 - INSTRUMENT PANEL STRUCTURAL DUCT ASSEMBLY
3 - PANEL DUCT EXTENSIONS

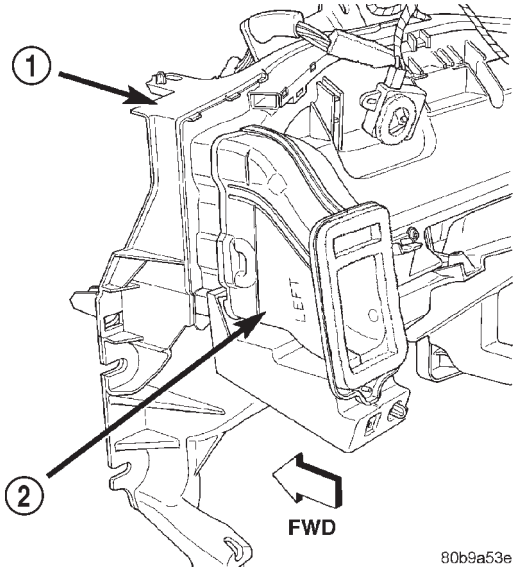

Fig. 7 INSTRUMENT PANEL DUCT EXTENSION

1 - INSTRUMENT PANEL STRUCTURAL DUCT ASSEMBLY
2 - PANEL DUCT EXTENSION

(3) Install the instrument panel top pad in the vehicle. See Instrument Panel System for the procedure.

REAR FLOOR HEAT DUCT

REMOVAL

(1) To remove the rear floor ducts from the vehicle, remove the knee blocker panels for access, and pull carpeting back.

(2) Pull the floor ducts from the HVAC housing (Fig. 8).

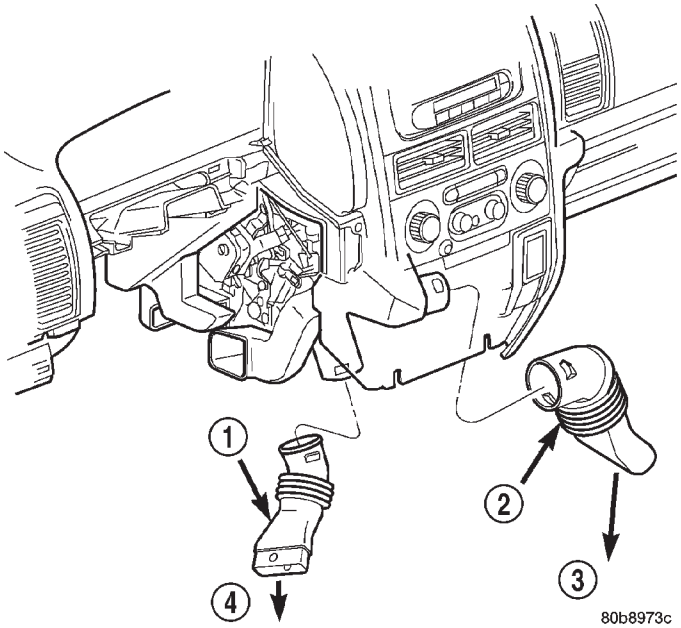

Fig. 8 REAR FLOOR DUCTS

1 - LEFT REAR PASSENGER FLOOR AIR DUCT
2 - RIGHT REAR PASSENGER FLOOR AIR DUCT
3 - TO CARPET DUCT
4 - TO CARPET DUCT

NOTE: The ductwork running from the HVAC housing rearward through the passenger compartment is molded into the carpeting, and must be replaced as a unit if damaged.

REAR FLOOR HEAT DUCT (Continued)

INSTALLATION

(1) Attach the floor ducts to the HVAC housing.

(2) Install the knee blocker panels, and install the carpeting back in its original position.

HVAC HOUSING

REMOVAL

The HVAC housing assembly must be removed from the vehicle and the two halves of the housing separated for service access of the heater core, evaporator coil, blend door(s), and each of the various mode doors.

WARNING: ON VEHICLES EQUIPPED WITH AIRBAGS, DISABLE THE AIRBAG SYSTEM BEFORE ATTEMPTING ANY STEERING WHEEL, STEERING COLUMN, OR INSTRUMENT PANEL COMPONENT DIAGNOSIS OR SERVICE. DISCONNECT AND ISOLATE THE BATTERY NEGATIVE (GROUND) CABLE, THEN WAIT TWO MINUTES FOR THE AIRBAG SYSTEM CAPACITOR TO DISCHARGE BEFORE PERFORMING FURTHER DIAGNOSIS OR SERVICE. THIS IS THE ONLY SURE WAY TO DISABLE THE AIRBAG SYSTEM. FAILURE TO TAKE THE PROPER PRECAUTIONS COULD RESULT IN AN ACCIDENTAL AIRBAG DEPLOYMENT AND POSSIBLE PERSONAL INJURY.

WARNING: REVIEW THE WARNINGS AND CAUTIONS IN PLUMBING BEFORE PERFORMING THE FOLLOWING OPERATION. (Refer to 24 - HEATING & AIR CONDITIONING/PLUMBING - WARNING) (Refer to 24 - HEATING & AIR CONDITIONING/PLUMBING - CAUTION)

(1) Disconnect and isolate the battery negative cable.

(2) Remove the instrument panel from the vehicle. Refer to Instrument Panel System for the procedures.

(3) Recover the refrigerant from the refrigerant system. (Refer to 24 - HEATING & AIR CONDITIONING/PLUMBING - STANDARD PROCEDURE - REFRIGERANT RECOVERY)

(4) Disconnect the liquid line refrigerant line from the evaporator inlet tube. Install plugs in, or tape over all of the opened refrigerant line fittings.

(5) Disconnect the suction line refrigerant line from the evaporator outlet tube. Install plugs in, or tape over all of the opened refrigerant line fittings.

(6) Disconnect the heater hoses from the heater core tubes. Clamp off the heater hoses to prevent loss of coolant. Refer to Cooling for the procedures. Install plugs in, or tape over the opened heater core tubes.

(7) If the vehicle is equipped with the manual temperature control system, unplug the HVAC system vacuum supply line connector from the tee fitting near the heater core tubes.

(8) Remove the coolant reserve/overflow bottle from the passenger side inner fender shield. Refer to Cooling for the procedures.

(9) Remove the Powertrain Control Module (PCM) from the passenger side dash panel in the engine compartment and set it aside. Do not unplug the PCM wire harness connectors. Refer to Electronic Control Modules for the procedures.

(10) Remove the nuts from the HVAC housing mounting studs on the engine compartment side of the dash panel (Fig. 9).

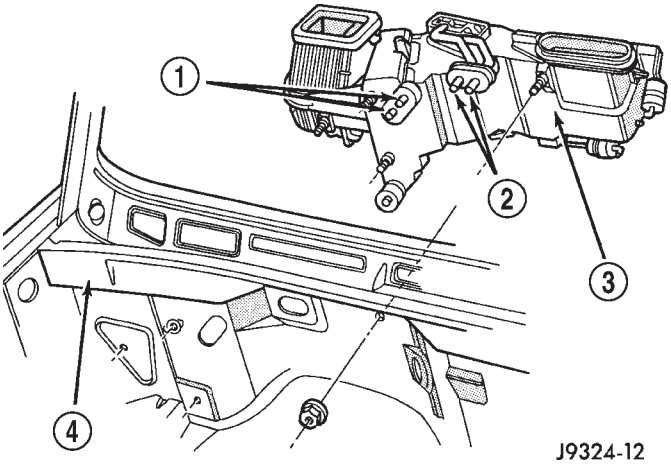

Fig. 9 HVAC HOUSING REMOVE/INSTALL

1 - EVAPORATOR LINES
2 - HEATER CORE LINES
3 - HVAC UNIT
4 - BODY ASSEMBLY

(11) Remove the rear floor heat ducts from the floor heat duct outlets (Fig. 10).

(12) Unplug the HVAC housing wire harness connectors.

(13) Remove the HVAC housing mounting nuts from the studs on the passenger compartment side of the dash panel (Fig. 11).

(14) Remove the HVAC housing from the vehicle, ensuring that the interior is covered in case of loss of fluids.

DISASSEMBLY

(1) Remove the HVAC housing from the vehicle. (Refer to 24 - HEATING & AIR CONDITIONING/DISTRIBUTION/HVAC HOUSING - REMOVAL)

(2) Place the HVAC housing with the tubing side down on a work bench, making allowance for leakage of fluids.

HVAC HOUSING (Continued)

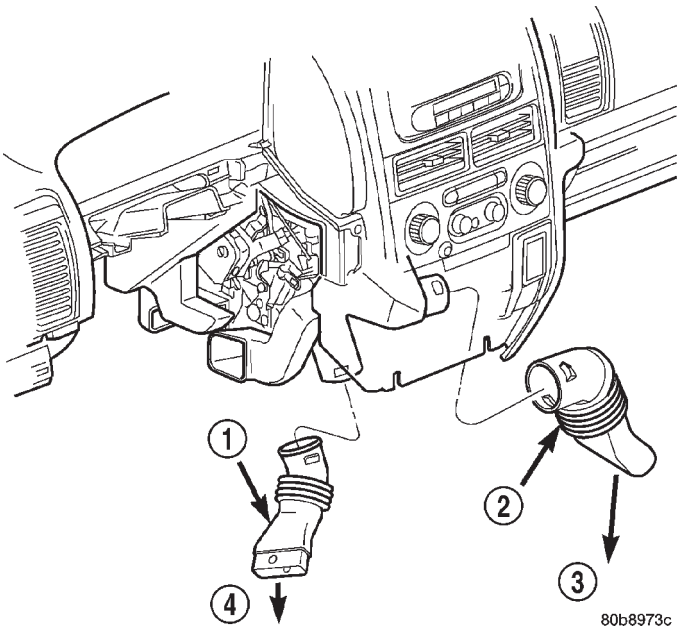

Fig. 10 REAR FLOOR DUCTS

1 - LEFT REAR PASSENGER FLOOR AIR DUCT
2 - RIGHT REAR PASSENGER FLOOR AIR DUCT
3 - TO CARPET DUCT
4 - TO CARPET DUCT

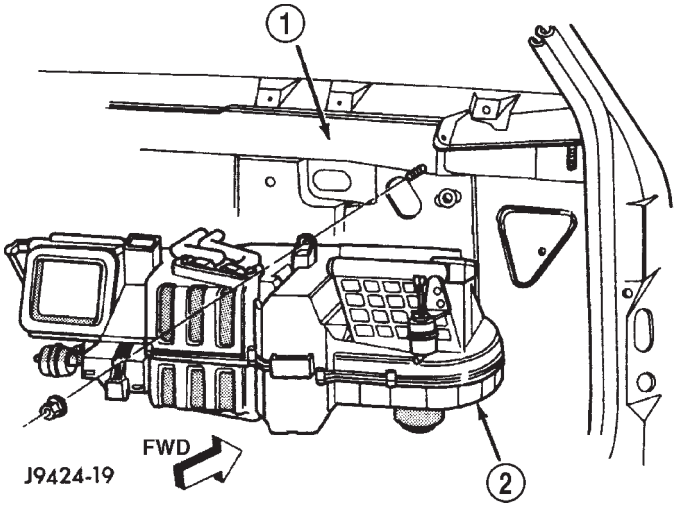

Fig. 11 HVAC HOUSING REMOVE/INSTALL

1 - BODY ASSEMBLY
2 - HVAC UNIT

(3) Using a sharp knife, split the foam seal surrounding the panel outlet opening, at the dividing line of the upper and lower cases (Fig. 12).

(4) Place the HVAC housing in the upright position on the work bench.

(5) Remove the mode door actuator on the left side of the housing, which controls the mode door in the top of the case (Fig. 13) (Fig. 14).

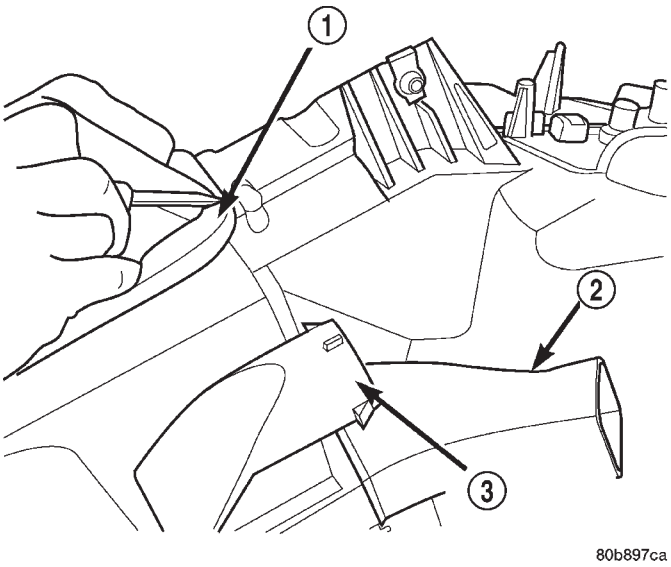

Fig. 12 SPLIT FOAM SEAL AT PANEL OUTLET

1 - ONE PIECE FOAM SEAL
2 - FLOOR DUCT
3 - TO REAR PASSENGER FLOOR AIR DUCT

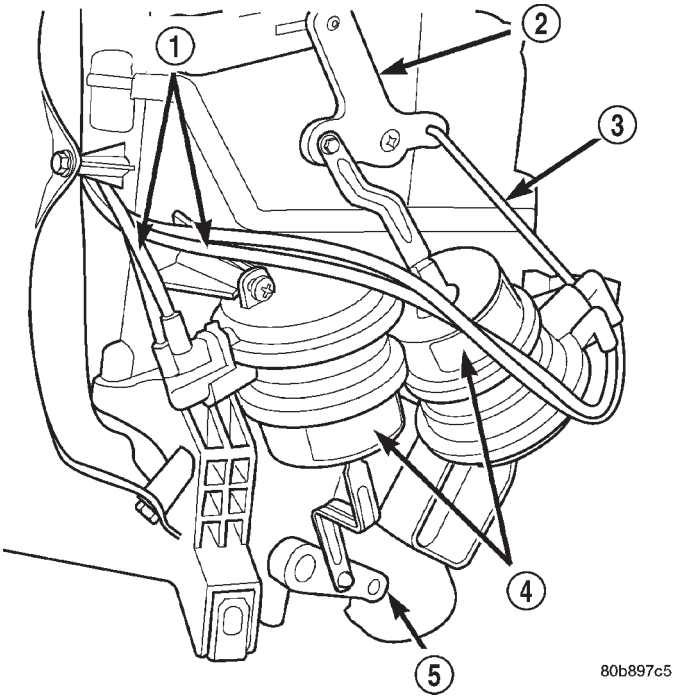

Fig. 13 MODE DOOR ACTUATORS - MANUAL SYSTEM

1 - VACUUM LINES
2 - ACTUATING LEVERS
3 - LINKAGE
4 - VACUUM ACTUATORS
5 - ACTUATING LEVER

HVAC HOUSING (Continued)

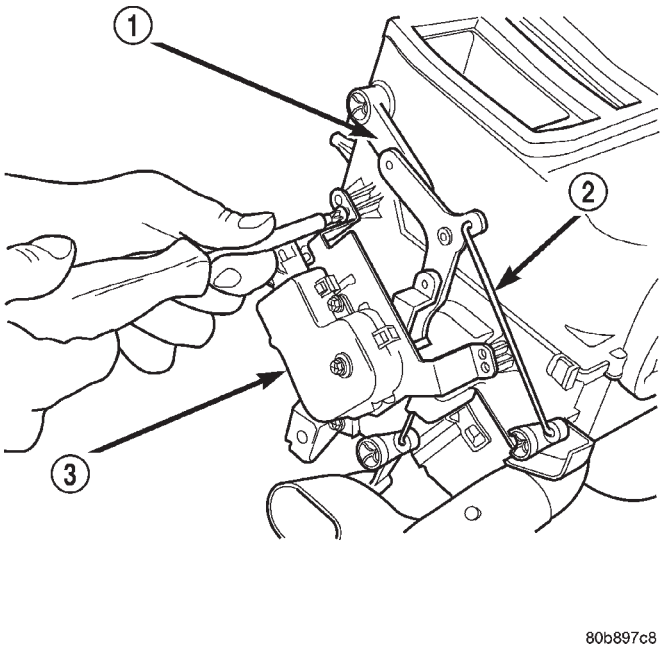

Fig. 14 MODE DOOR ACTUATOR - AZC SYSTEM

1 - LEVER ASSEMBLY
2 - LINKAGE
3 - ELECTRIC ACTUATOR

(6) Remove the screw with plastic washer holding the lever assembly to the upper case section, and move aside (Fig. 15).

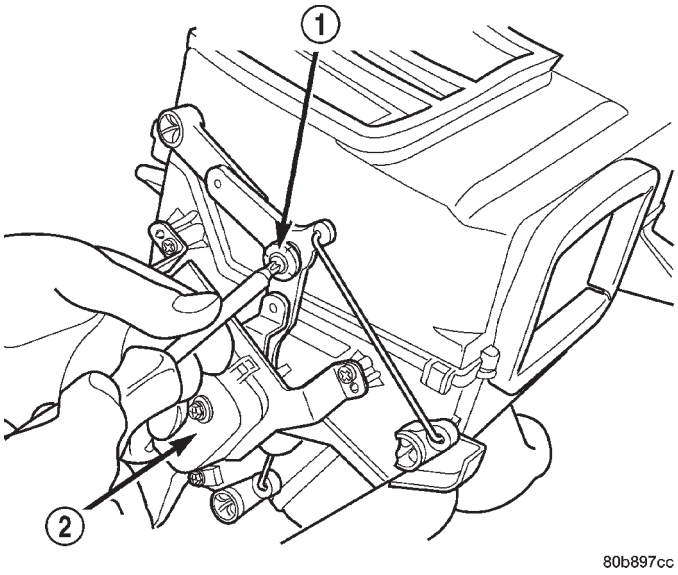

Fig. 15 REMOVE SCREW WITH PLASTIC WASHER

1 - SCREW WITH PLASTIC WASHER
2 - ELECTRIC ACTUATOR

(7) Remove the 5 clips that secure the two housing halves to each other. There are 2 on either side at the center, and 1 located at the forward end of the mode door side of the case (Fig. 16).

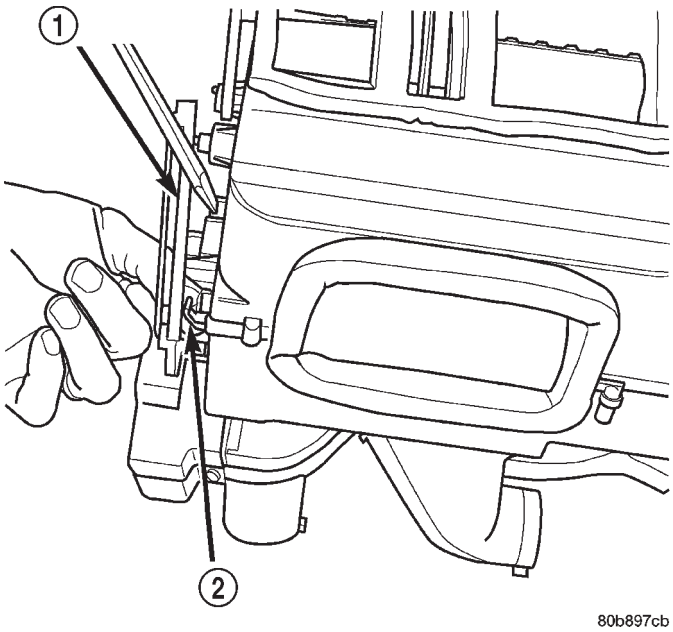

Fig. 16 HVAC HOUSING CLIPS

1 - ACTUATING LEVERS AND LINKAGE
2 - HOUSING CLIP

(8) Release the wire harness electrical connector(s) from the mounts on the lower case at the blower motor end of the unit (Fig. 17).

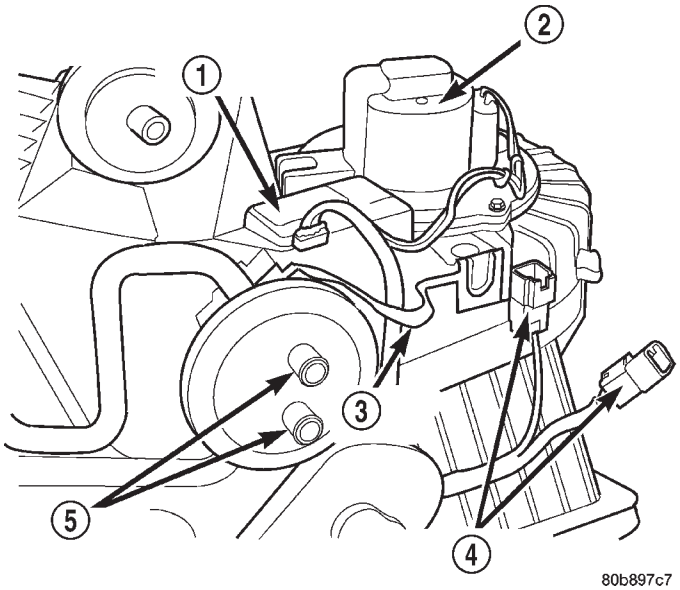

Fig. 17 WIRE HARNESS ELECTRICAL CONNECTOR(S)

1 - BLOWER MOTOR RESISTOR
2 - BLOWER MOTOR
3 - GROUND STRAP
4 - ELECTRICAL CONNECTORS
5 - HEATER CORE TUBES

HVAC HOUSING (Continued)

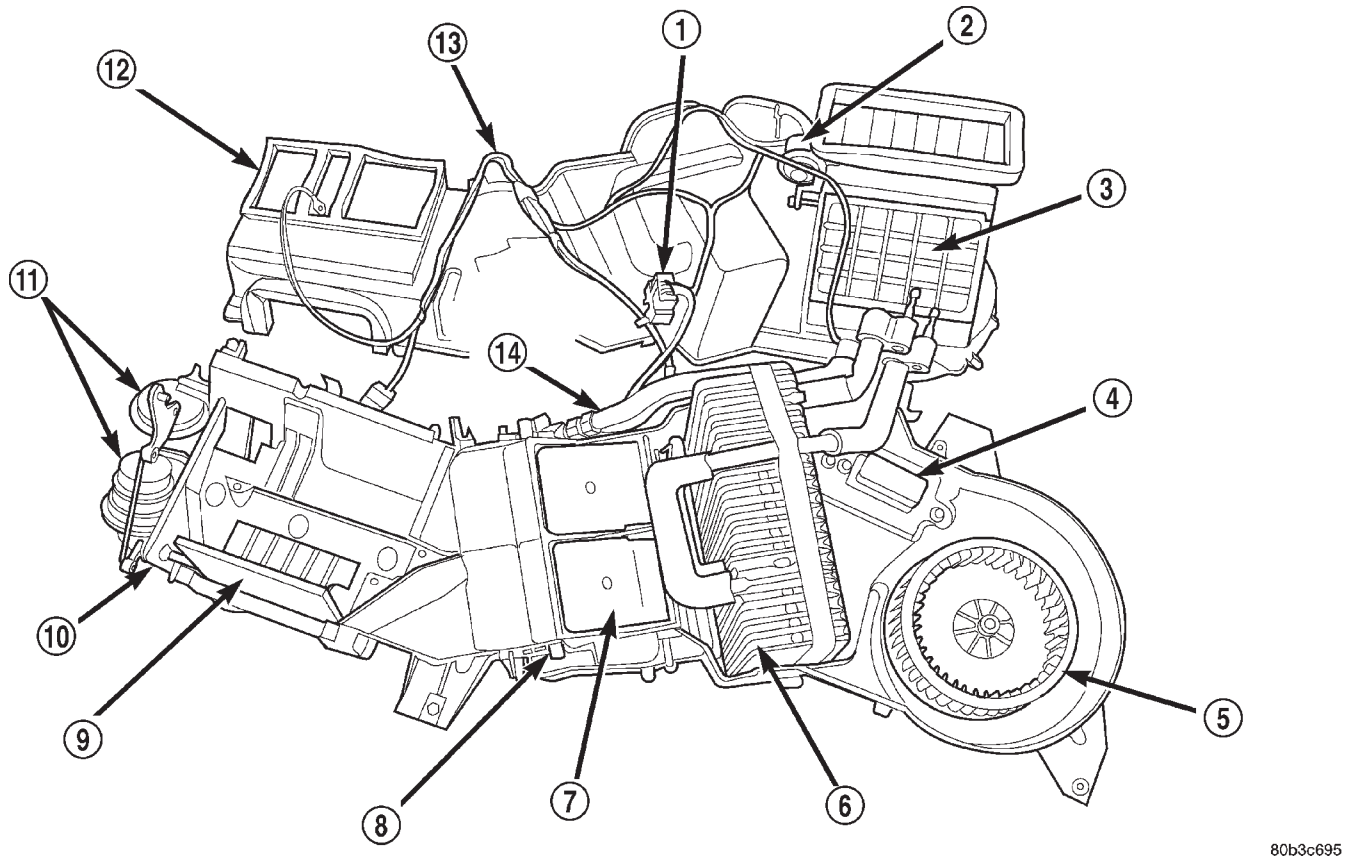

Fig. 18 UPPER AND LOWER HVAC HOUSING - SEPARATED

1 - ELECTRICAL CONNECTORS
2 - VACUUM ACTUATOR
3 - RECIRCULATION DOOR
4 - BLOWER MOTOR RESISTOR/CONTROLLER
5 - BLOWER WHEEL
6 - EVAPORATOR AND TUBES
7 - BLEND DOOR
8 - PIVOT SHAFT (MOTOR REMOVED)
9 - PANEL/OUTLET DOOR
10 - LOWER HOUSING
11 - VACUUM ACTUATORS
12 - UPPER HOUSING
13 - VACUUM HARNESS
14 - HEATER CORE AND TUBES

(9) Remove the 10 screws that secure the two housing halves to each other.

(10) Separate the top half of the HVAC housing from the bottom half (Fig. 18).

NOTE: The blend door sub-assembly is attached to the housing with 2 screws, and may be removed for service (Fig. 19).

ASSEMBLY

(1) Place the top half of the HVAC housing on the bottom half. Be certain that each of the door pivot pins align with the pivot holes in the HVAC housing.

(2) Install the 10 screws that secure the two housing halves to each other. Tighten the HVAC housing screws to 2.2 N·m (20 in. lbs.).

(3) Attach the wire harness electrical connector(s) to the mounts on the lower case at the blower motor end of the unit.

(4) Install the 5 clips that secure the two housing halves to each other. Check doors for binding after replacement, and after assembly of housing.

(5) Install the screw with plastic washer holding the lever assembly to the upper case section.

(6) Install the mode door actuator on the left side of the housing.

HVAC HOUSING (Continued)

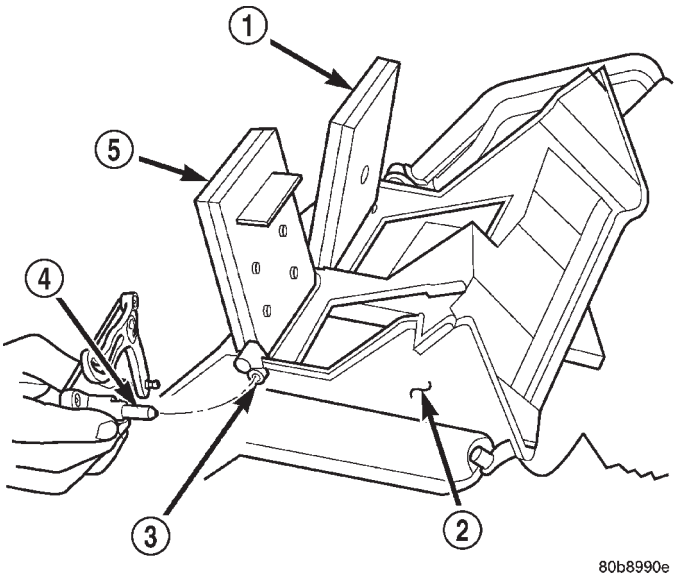

Fig. 19 BLEND DOOR SUB-ASSEMBLY (AZC)

1 - PASSENGER SIDE BLEND DOOR
2 - BLEND DOOR SUB-ASSEMBLY
3 - DOOR PIVOT SHAFT BUSHING
4 - DOOR SHAFT LEVER
5 - DRIVER SIDE BLEND DOOR

INSTALLATION

WARNING: REVIEW THE WARNINGS AND CAUTIONS IN PLUMBING BEFORE PERFORMING THE FOLLOWING OPERATION. (Refer to 24 - HEATING & AIR CONDITIONING/PLUMBING - WARNING) (Refer to 24 - HEATING & AIR CONDITIONING/PLUMBING - CAUTION)

Any kinks or sharp bends in the refrigerant plumbing will reduce the capacity of the entire air conditioning system. Kinks and sharp bends reduce the flow of refrigerant in the system. A good rule for the flexible hose refrigerant lines is to keep the radius of all bends at least ten times the diameter of the hose. In addition, the flexible hose refrigerant lines should be routed so they are at least 80 millimeters (3 inches) from the exhaust manifold.

High pressures are produced in the refrigerant system when the air conditioning compressor is operating. Extreme care must be exercised to make sure that each of the refrigerant system connections is pressure-tight and leak free. It is a good practice to inspect all flexible hose refrigerant lines at least once a year to make sure they are in good condition and properly routed.

(1) Position the HVAC housing to the dash panel. Be certain that the evaporator condensate drain tube and the housing mounting studs are inserted into their correct mounting holes.

(2) Install the HVAC housing mounting nuts to the studs on the passenger compartment side of the dash panel. Tighten the nuts to 4.5 N·m (40 in. lbs.).

(3) Connect the HVAC housing wire harness connectors.

(4) Reinstall the rear floor heat ducts to the center floor heat duct outlets.

(5) Install and tighten the nuts onto the HVAC housing mounting studs on the engine compartment side of the dash panel. Tighten the nuts to 7 N·m (60 in. lbs.).

(6) Reinstall the PCM to the passenger side dash panel in the engine compartment. Refer to Electronic Control Modules for the procedures.

(7) Reinstall the coolant reserve/overflow bottle to the passenger side inner fender shield. Refer to Cooling for the procedures.

(8) If the vehicle is equipped with the manual temperature control system, connect the HVAC system vacuum supply line connector to the tee fitting near the heater core tubes.

(9) Unclamp/unplug the heater core hoses and tubes. Connect the heater hoses to the heater core tubes and fill the engine cooling system. Refer to Cooling for the procedures.

(10) Unplug or remove the tape from the suction line and the evaporator outlet tube fittings. Connect the suction line to the evaporator outlet tube. Tighten retaining nut to 28 N·m (250 in. lbs.).

(11) Unplug or remove the tape from the liquid line and the evaporator inlet tube fittings. Connect the liquid line to the evaporator inlet tube. Tighten retaining nut to 28 N·m (250 in. lbs.).

(12) Evacuate the refrigerant system. (Refer to 24 - HEATING & AIR CONDITIONING/PLUMBING - STANDARD PROCEDURE - REFRIGERANT SYSTEM EVACUATE)

(13) Charge the refrigerant system. (Refer to 24 - HEATING & AIR CONDITIONING/PLUMBING - STANDARD PROCEDURE - REFRIGERANT SYSTEM CHARGE)

(14) Install the instrument panel in the vehicle. Refer to Instrument Panel System for the procedures.

(15) Connect the battery negative cable.

(16) Start the engine and check for proper operation of the heating and air conditioning systems.

BLEND DOOR

REMOVAL

WARNING: ON VEHICLES EQUIPPED WITH AIRBAGS, DISABLE THE AIRBAG SYSTEM BEFORE ATTEMPTING ANY STEERING WHEEL, STEERING COLUMN, OR INSTRUMENT PANEL COMPONENT DIAGNOSIS OR SERVICE. DISCONNECT AND ISOLATE THE BATTERY NEGATIVE (GROUND) CABLE, THEN WAIT TWO MINUTES FOR THE AIRBAG SYSTEM CAPACITOR TO DISCHARGE BEFORE PERFORMING FURTHER DIAGNOSIS OR SERVICE. THIS IS THE ONLY SURE WAY TO DISABLE THE AIRBAG SYSTEM. FAILURE TO TAKE THE PROPER PRECAUTIONS COULD RESULT IN AN ACCIDENTAL AIRBAG DEPLOYMENT AND POSSIBLE PERSONAL INJURY.

(1) Remove and disassemble the HVAC housing. (Refer to 24 - HEATING & AIR CONDITIONING/DISTRIBUTION/HVAC HOUSING - REMOVAL) (Refer to 24 - HEATING & AIR CONDITIONING/DISTRIBUTION/HVAC HOUSING - DISASSEMBLY)

(2) Remove evaporator from lower case to ease access to plastic door shaft bushing.

(3) Pinch the retention tabs holding the blend door pivot shaft to the case. The 3 plastic tabs, located on the inside of the case, are part of the shaft retainer.

(4) Remove door(s).

INSTALLATION

(1) Install the blend door(s) by snapping the pivot shaft into the HVAC case.

(2) Install the evaporator in the lower case.

(3) Reassemble the HVAC housing and install in the vehicle. (Refer to 24 - HEATING & AIR CONDITIONING/DISTRIBUTION/HVAC HOUSING - ASSEMBLY) (Refer to 24 - HEATING & AIR CONDITIONING/DISTRIBUTION/HVAC HOUSING - INSTALLATION)

NOTE: The blend door sub-assembly is attached to the housing with 2 screws, and may be removed for service (Fig. 20).

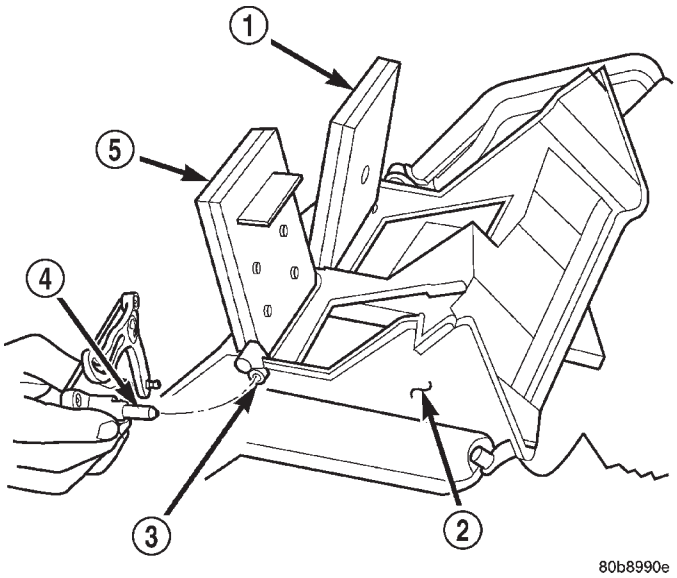

Fig. 20 BLEND DOOR SUB-ASSEMBLY

1 - PASSENGER SIDE BLEND DOOR
2 - BLEND DOOR SUB-ASSEMBLY
3 - DOOR PIVOT SHAFT BUSHING
4 - DOOR SHAFT LEVER
5 - DRIVER SIDE BLEND DOOR

MODE DOOR

REMOVAL - PANEL OUTLET DOOR

WARNING: ON VEHICLES EQUIPPED WITH AIRBAGS, DISABLE THE AIRBAG SYSTEM BEFORE ATTEMPTING ANY STEERING WHEEL, STEERING COLUMN, OR INSTRUMENT PANEL COMPONENT DIAGNOSIS OR SERVICE. DISCONNECT AND ISOLATE THE BATTERY NEGATIVE (GROUND) CABLE, THEN WAIT TWO MINUTES FOR THE AIRBAG SYSTEM CAPACITOR TO DISCHARGE BEFORE PERFORMING FURTHER DIAGNOSIS OR SERVICE. THIS IS THE ONLY SURE WAY TO DISABLE THE AIRBAG SYSTEM. FAILURE TO TAKE THE PROPER PRECAUTIONS COULD RESULT IN AN ACCIDENTAL AIRBAG DEPLOYMENT AND POSSIBLE PERSONAL INJURY.

(1) Remove and disassemble the HVAC housing. (Refer to 24 - HEATING & AIR CONDITIONING/DISTRIBUTION/HVAC HOUSING - REMOVAL) (Refer to 24 - HEATING & AIR CONDITIONING/DISTRIBUTION/HVAC HOUSING - DISASSEMBLY)

MODE DOOR (Continued)

(2) Pinch the retention tabs holding the panel outlet door pivot shaft to the case. The 3 plastic tabs, located on the inside of the case, are part of the shaft retainer (Fig. 21).

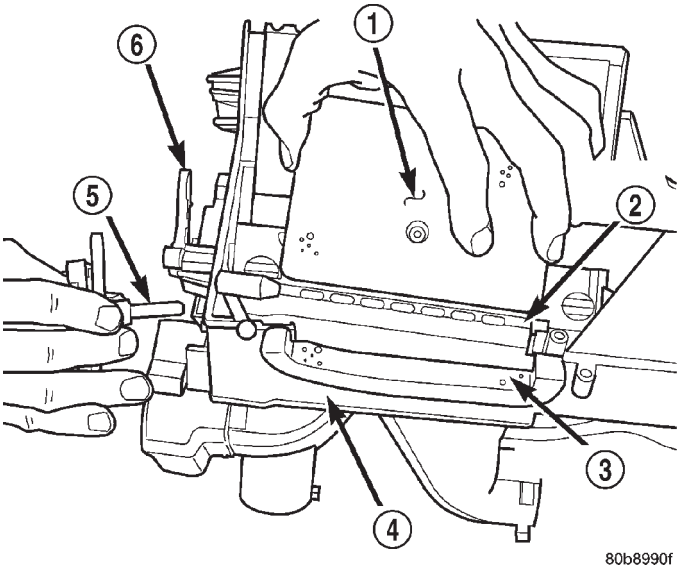

Fig. 21 PANEL OUTLET DOOR

1 - PANEL/OUTLET DOOR
2 - DOOR SHAFT
3 - FOAM SEAL (SPLIT)
4 - LOWER HOUSING
5 - PANEL OUTLET DOOR LEVER
6 - LEVER

(3) Using a trim stick or another suitable wide flat-bladed tool, gently pry the panel outlet door pivot shaft retainer from the pivot shaft.

(4) Remove the panel outlet door from the HVAC housing.

REMOVAL - HEAT/DEFROST DOOR

WARNING: ON VEHICLES EQUIPPED WITH AIRBAGS, DISABLE THE AIRBAG SYSTEM BEFORE ATTEMPTING ANY STEERING WHEEL, STEERING COLUMN, OR INSTRUMENT PANEL COMPONENT DIAGNOSIS OR SERVICE. DISCONNECT AND ISOLATE THE BATTERY NEGATIVE (GROUND) CABLE, THEN WAIT TWO MINUTES FOR THE AIRBAG SYSTEM CAPACITOR TO DISCHARGE BEFORE PERFORMING FURTHER DIAGNOSIS OR SERVICE. THIS IS THE ONLY SURE WAY TO DISABLE THE AIRBAG SYSTEM. FAILURE TO TAKE THE PROPER PRECAUTIONS COULD RESULT IN AN ACCIDENTAL AIRBAG DEPLOYMENT AND POSSIBLE PERSONAL INJURY.

(1) Remove and disassemble the HVAC housing. (Refer to 24 - HEATING & AIR CONDITIONING/ DISTRIBUTION/HVAC HOUSING - REMOVAL) (Refer to 24 - HEATING & AIR CONDITIONING/ DISTRIBUTION/HVAC HOUSING - DISASSEMBLY)

(2) Remove the evaporator, and styrofoam tray from the lower case.

(3) Place the HVAC housing upside down on a work bench.

(4) Unscrew and remove the 2 floor heat ducts.

(5) Unsnap and remove the duct adapter from the bottom of the heat/defrost door sub-assembly (Fig. 22).

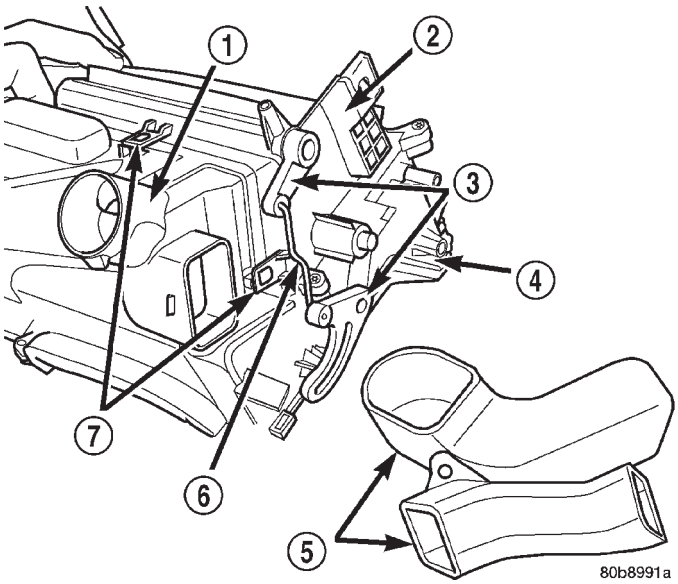

Fig. 22 HEAT/DEFROST DOOR DUCTS, AND ADAPTER

1 - FLOOR DUCT ADAPTER
2 - HEAT/DEFROST DOOR SUB-ASSEMBLY
3 - DOOR LEVERS
4 - LOWER HOUSING
5 - FLOOR DUCTS
6 - LINKAGE
7 - RETAINING TABS

(6) Gently pry the metal linkage from the heat/defrost door lever.

(7) Remove the heat/defrost door sub-assembly, which is attached to the housing with 4 screws (Fig. 23).

(8) Pinch the retention tabs holding the heat/defrost door pivot shaft lever to the case. The 3 plastic tabs, located on the inside of the case, are part of the shaft retainer.

(9) Remove the heat/defrost door (Fig. 24).

MODE DOOR (Continued)

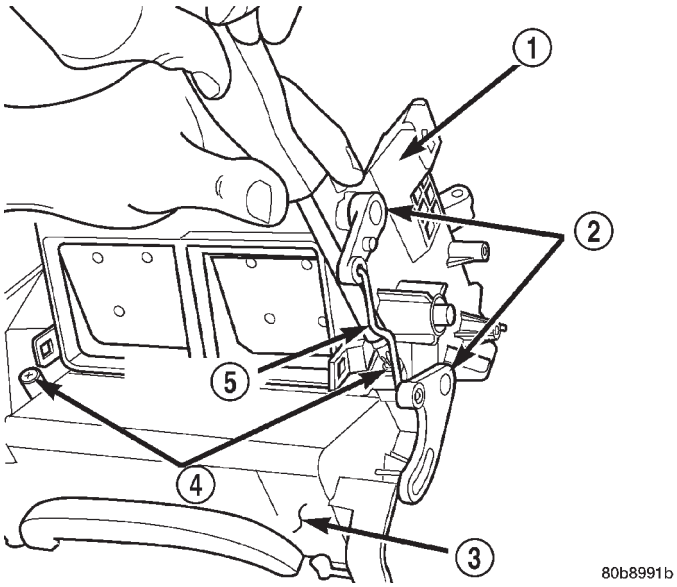

Fig. 23 HEAT/DEFROST DOOR SUB-ASSEMBLY REMOVAL

1 - HEAT/DEFROST DOOR SUB-ASSEMBLY
2 - LEVERS
3 - LOWER HOUSING
4 - SCREWS
5 - LINKAGE

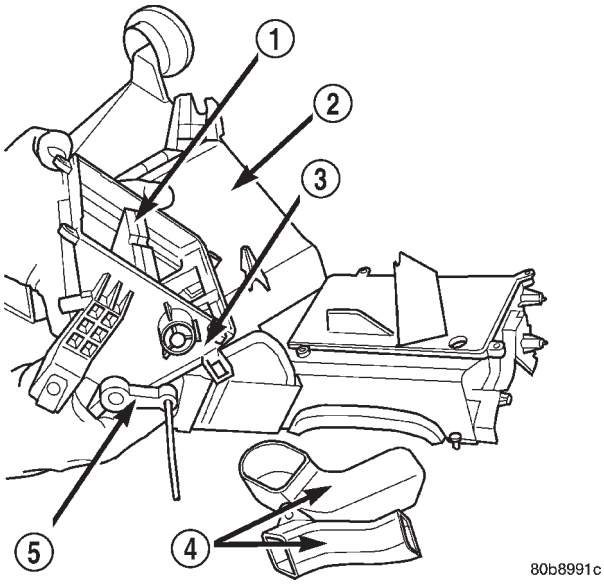

Fig. 24 HEAT/DEFROST DOOR REMOVAL

1 - HEAT/DEFROST DOOR
2 - LOWER HOUSING
3 - HEAT/DEFROST DOOR SUB-ASSEMBLY
4 - FLOOR DUCTS
5 - DOOR LEVER

REMOVAL - PANEL/DEFROST DOOR

WARNING: ON VEHICLES EQUIPPED WITH AIRBAGS, DISABLE THE AIRBAG SYSTEM BEFORE ATTEMPTING ANY STEERING WHEEL, STEERING COLUMN, OR INSTRUMENT PANEL COMPONENT DIAGNOSIS OR SERVICE. DISCONNECT AND ISOLATE THE BATTERY NEGATIVE (GROUND) CABLE, THEN WAIT TWO MINUTES FOR THE AIRBAG SYSTEM CAPACITOR TO DISCHARGE BEFORE PERFORMING FURTHER DIAGNOSIS OR SERVICE. THIS IS THE ONLY SURE WAY TO DISABLE THE AIRBAG SYSTEM. FAILURE TO TAKE THE PROPER PRECAUTIONS COULD RESULT IN AN ACCIDENTAL AIRBAG DEPLOYMENT AND POSSIBLE PERSONAL INJURY.

(1) Remove and disassemble the HVAC housing. See HVAC Housing in this group for the procedures.

(2) Pinch the retention tabs holding the panel/defrost door pivot shaft to the case. The 3 plastic tabs, located on the inside of the case, are part of the shaft retainer (Fig. 25).

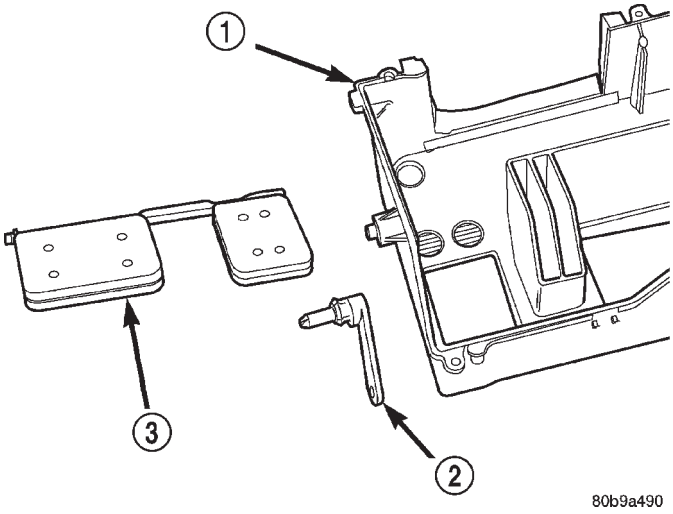

Fig. 25 PANEL/DEFROST DOOR

1 - UPPER HOUSING
2 - LEVER
3 - PANEL/DEFROST MODE DOOR

(3) Using a trim stick or another suitable wide flat-bladed tool, gently pry the panel/defrost door pivot shaft retainer from the pivot shaft.

(4) Remove the panel/defrost door from the HVAC housing.

MODE DOOR (Continued)

INSTALLATION - PANEL OUTLET DOOR

(1) Snap the panel outlet door pivot shaft retainer on the pivot shaft.

(2) Attach the panel outlet door pivot shaft to the HVAC case.

(3) Reassemble the HVAC housing and install in the vehicle. (Refer to 24 - HEATING & AIR CONDITIONING/DISTRIBUTION/HVAC HOUSING - ASSEMBLY) (Refer to 24 - HEATING & AIR CONDITIONING/DISTRIBUTION/HVAC HOUSING - INSTALLATION)

INSTALLATION - HEAT/DEFROST DOOR

(1) Install the heat/defrost door by snapping the heat/defrost door pivot shaft into the HVAC case.

(2) Install the heat/defrost door sub-assembly and tighten the mounting screws to 2.2 N·m (20 in. lbs.).

(3) Attach the metal linkage to the heat/defrost door lever.

(4) Snap the duct adapter to the bottom of the heat/defrost door sub-assembly.

(5) Install the 2 floor heat ducts and tighten the mounting screws to 2.2 N·m (20 in. lbs.)..

(6) Install the evaporator, and styrofoam tray in the lower case.

(7) Reassemble the HVAC housing and install in the vehicle. (Refer to 24 - HEATING & AIR CONDITIONING/DISTRIBUTION/HVAC HOUSING - ASSEMBLY) (Refer to 24 - HEATING & AIR CONDITIONING/DISTRIBUTION/HVAC HOUSING - INSTALLATION)

INSTALLATION - PANEL/DEFROST DOOR

(1) Snap the panel/defrost door pivot shaft retainer on the pivot shaft.

(2) Attach the panel/defrost door pivot shaft to the HVAC case.

(3) Reassemble the HVAC housing and install in the vehicle. (Refer to 24 - HEATING & AIR CONDITIONING/DISTRIBUTION/HVAC HOUSING - ASSEMBLY) (Refer to 24 - HEATING & AIR CONDITIONING/DISTRIBUTION/HVAC HOUSING - INSTALLATION)

RECIRCULATION DOOR

REMOVAL

WARNING: ON VEHICLES EQUIPPED WITH AIRBAGS, DISABLE THE AIRBAG SYSTEM BEFORE ATTEMPTING ANY STEERING WHEEL, STEERING COLUMN, OR INSTRUMENT PANEL COMPONENT DIAGNOSIS OR SERVICE. DISCONNECT AND ISOLATE THE BATTERY NEGATIVE (GROUND) CABLE, THEN WAIT TWO MINUTES FOR THE AIRBAG SYSTEM CAPACITOR TO DISCHARGE BEFORE PERFORMING FURTHER DIAGNOSIS OR SERVICE. THIS IS THE ONLY SURE WAY TO DISABLE THE AIRBAG SYSTEM. FAILURE TO TAKE THE PROPER PRECAUTIONS COULD RESULT IN AN ACCIDENTAL AIRBAG DEPLOYMENT AND POSSIBLE PERSONAL INJURY.

(1) Remove the HVAC housing from the vehicle. (Refer to 24 - HEATING & AIR CONDITIONING/DISTRIBUTION/HVAC HOUSING - REMOVAL)

(2) Place the HVAC housing right side up on the work bench.

(3) Unplug the wire/vacuum connector from the recirculation door actuator.

(4) Remove the 2 screws fastening the recirculation door sub-assembly to the main housing (Fig. 26).

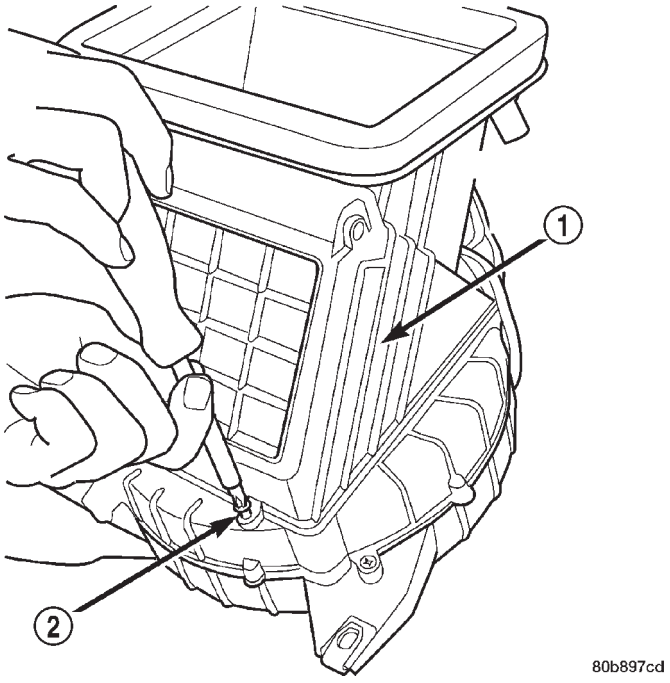

Fig. 26 RECIRCULATION DOOR HOUSING

1 - RECIRCULATION DOOR HOUSING
2 - ATTACHING SCREWS

RECIRCULATION DOOR (Continued)

(5) Raise the front of the door sub-assembly while releasing the 2 tabs holding the rear to the main housing, and remove the recirculation door housing.

(6) Remove the electric/vacuum actuator from the recirculation door sub-assembly and set aside.

(7) Pinch the retention tabs holding the recirculation door pivot shaft to the case. The 3 plastic tabs, located on the inside of the case, are part of the shaft retainer.

(8) Remove the recirculation door from the recirculation air door housing.

INSTALLATION

(1) Install the recirculation door in the recirculation air door housing by snapping the pivot shaft retention tabs into the case.

(2) Install the electric/vacuum actuator on the recirculation door sub-assembly. Check door for binding after replacement.

(3) Install the recirculation door housing on the HVAC case and tighten the 2 screws to 2.2 N·m (20 in. lbs.).

(4) Plug in the wire/vacuum connector to the recirculation door actuator.

(5) Install the HVAC housing in the vehicle. (Refer to 24 - HEATING & AIR CONDITIONING/DISTRIBUTION/HVAC HOUSING - INSTALLATION)

PLUMBING

TABLE OF CONTENTS

page

PLUMBING
DESCRIPTION 51
OPERATION. 51
WARNING 52
CAUTION. 52
DIAGNOSIS AND TESTING 53
REFRIGERANT SYSTEM LEAKS 53
STANDARD PROCEDURE 54
REFRIGERANT SYSTEM SERVICE EQUIPMENT 54
REFRIGERANT RECOVERY. 55
REFRIGERANT SYSTEM EVACUATE. 55
REFRIGERANT SYSTEM CHARGE 55
SPECIFICATIONS 56
A/C COMPRESSOR
DESCRIPTION 56
OPERATION. 57
DIAGNOSIS AND TESTING 57
COMPRESSOR NOISE. 57
REMOVAL 58
INSTALLATION. 58
A/C CONDENSER
DESCRIPTION 59
OPERATION. 59
REMOVAL 60
INSTALLATION. 60
A/C DISCHARGE LINE
REMOVAL 61
INSTALLATION. 61
LIQUID LINE
REMOVAL 62
INSTALLATION. 62
SUCTION LINE
REMOVAL 63
INSTALLATION. 63
A/C EVAPORATOR
DESCRIPTION 63
OPERATION. 63
REMOVAL 64
INSTALLATION. 65
ACCUMULATOR
DESCRIPTION 65
OPERATION. 65
REMOVAL 65
INSTALLATION. 66
A/C ORIFICE TUBE
DESCRIPTION 67
OPERATION. 68
REMOVAL 68
HEATER CORE
DESCRIPTION 68
OPERATION. 68
REMOVAL 68
INSTALLATION. 69
REFRIGERANT
DESCRIPTION 70
OPERATION. 70
REFRIGERANT OIL
DESCRIPTION 70
OPERATION. 70
STANDARD PROCEDURE 71
REFRIGERANT OIL LEVEL. 71

PLUMBING

DESCRIPTION - REFRIGERANT LINE

The refrigerant lines and hoses are used to carry the refrigerant between the various air conditioning system components. A barrier hose design with a nylon tube, which is sandwiched between rubber layers, is used for the R-134a air conditioning system on this vehicle. This nylon tube helps to further contain the R-134a refrigerant, which has a smaller molecular structure than R-12 refrigerant. The ends of the refrigerant hoses are made from lightweight aluminum or steel, and commonly use braze-less fittings.

Any kinks or sharp bends in the refrigerant plumbing will reduce the capacity of the entire air conditioning system. Kinks and sharp bends reduce the flow of refrigerant in the system. A good rule for the flexible hose refrigerant lines is to keep the radius of all bends at least ten times the diameter of the hose. In addition, the flexible hose refrigerant lines should be routed so they are at least 80 millimeters (3 inches) from the exhaust manifold.

OPERATION - REFRIGERANT LINE

High pressures are produced in the refrigerant system when the air conditioning compressor is operating. Extreme care must be exercised to make sure that each of the refrigerant system connections is pressure-tight and leak free. It is a good practice to inspect all flexible hose refrigerant lines at least once a year to make sure they are in good condition and properly routed.

PLUMBING (Continued)

The refrigerant lines and hoses are coupled with other components of the HVAC system with peanut-block style fittings. A stat-O seal type flat steel gasket with a captured compressible O-ring, is used to mate plumbing lines with A/C components to ensure the integrity of the refrigerant system.

The refrigerant lines and hoses cannot be repaired and, if faulty or damaged, they must be replaced.

WARNING

WARNING:
THE AIR CONDITIONING SYSTEM CONTAINS REFRIGERANT UNDER HIGH PRESSURE. SEVERE PERSONAL INJURY MAY RESULT FROM IMPROPER SERVICE PROCEDURES. REPAIRS SHOULD ONLY BE PERFORMED BY QUALIFIED SERVICE PERSONNEL.
AVOID BREATHING THE REFRIGERANT AND REFRIGERANT OIL VAPOR OR MIST. EXPOSURE MAY IRRITATE THE EYES, NOSE, AND/OR THROAT. WEAR EYE PROTECTION WHEN SERVICING THE AIR CONDITIONING REFRIGERANT SYSTEM. SERIOUS EYE INJURY CAN RESULT FROM DIRECT CONTACT WITH THE REFRIGERANT. IF EYE CONTACT OCCURS, SEEK MEDICAL ATTENTION IMMEDIATELY.
DO NOT EXPOSE THE REFRIGERANT TO OPEN FLAME. POISONOUS GAS IS CREATED WHEN REFRIGERANT IS BURNED. AN ELECTRONIC LEAK DETECTOR IS RECOMMENDED.
IF ACCIDENTAL SYSTEM DISCHARGE OCCURS, VENTILATE THE WORK AREA BEFORE RESUMING SERVICE. LARGE AMOUNTS OF REFRIGERANT RELEASED IN A CLOSED WORK AREA WILL DISPLACE THE OXYGEN AND CAUSE SUFFOCATION.
THE EVAPORATION RATE OF R-134a REFRIGERANT AT AVERAGE TEMPERATURE AND ALTITUDE IS EXTREMELY HIGH. AS A RESULT, ANYTHING THAT COMES IN CONTACT WITH THE REFRIGERANT WILL FREEZE. ALWAYS PROTECT THE SKIN OR DELICATE OBJECTS FROM DIRECT CONTACT WITH THE REFRIGERANT.
THE R-134a SERVICE EQUIPMENT OR THE VEHICLE REFRIGERANT SYSTEM SHOULD NOT BE PRESSURE TESTED OR LEAK TESTED WITH COMPRESSED AIR. SOME MIXTURES OF AIR AND R-134a HAVE BEEN SHOWN TO BE COMBUSTIBLE AT ELEVATED PRESSURES. THESE MIXTURES ARE POTENTIALLY DANGEROUS, AND MAY RESULT IN FIRE OR EXPLOSION CAUSING INJURY OR PROPERTY DAMAGE.

CAUTION

CAUTION:
Liquid refrigerant is corrosive to metal surfaces. Follow the operating instructions supplied with the service equipment being used.
Never add R-12 to a refrigerant system designed to use R-134a. Damage to the system will result.
R-12 refrigerant oil must not be mixed with R-134a refrigerant oil. They are not compatible.
Do not use R-12 equipment or parts on the R-134a system. Damage to the system will result.
Do not overcharge the refrigerant system. This will cause excessive compressor head pressure and can cause noise and system failure.
Recover the refrigerant before opening any fitting or connection. Open the fittings with caution, even after the system has been discharged. Never open or loosen a connection before recovering the refrigerant.
The refrigerant system must always be evacuated before charging.
Do not open the refrigerant system or uncap a replacement component until you are ready to service the system. This will prevent contamination in the system.
Before disconnecting a component, clean the outside of the fittings thoroughly to prevent contamination from entering the refrigerant system.
Immediately after disconnecting a component from the refrigerant system, seal the open fittings with a cap or plug.
Before connecting an open refrigerant fitting, always install a new seal or gasket. Coat the fitting and seal with clean refrigerant oil before connecting.
Do not remove the sealing caps from a replacement component until it is to be installed.
When installing a refrigerant line, avoid sharp bends that may restrict refrigerant flow. Position the refrigerant lines away from exhaust system components or any sharp edges, which may damage the line.
Tighten refrigerant fittings only to the specified torque. The aluminum fittings used in the refrigerant system will not tolerate overtightening.
When disconnecting a refrigerant fitting, use a wrench on both halves of the fitting. This will prevent twisting of the refrigerant lines or tubes.
Refrigerant oil will absorb moisture from the atmosphere if left uncapped. Do not open a container of refrigerant oil until you are ready to use it. Replace the cap on the oil container immediately after using. Store refrigerant oil only in a clean, airtight, and moisture-free container.
Keep service tools and the work area clean. Contamination of the refrigerant system through careless work habits must be avoided.

PLUMBING (Continued)

REFRIGERANT HOSES/LINES/TUBES PRECAUTIONS

Kinks or sharp bends in the refrigerant plumbing will reduce the capacity of the entire system. High pressures are produced in the system when it is operating. Extreme care must be exercised to make sure that all refrigerant system connections are pressure tight.

A good rule for the flexible hose refrigerant lines is to keep the radius of all bends at least ten times the diameter of the hose. Sharp bends will reduce the flow of refrigerant. The flexible hose lines should be routed so they are at least 80 millimeters (3 inches) from the exhaust manifold. It is a good practice to inspect all flexible refrigerant system hose lines at least once a year to make sure they are in good condition and properly routed.

There are two types of refrigerant fittings:

- All fittings with O-rings need to be coated with refrigerant oil before installation. Use only O-rings that are the correct size and approved for use with R-134a refrigerant. Failure to do so may result in a leak.
- Unified plumbing connections with gaskets cannot be serviced with O-rings. The gaskets are not reusable and new gaskets do not require lubrication before installing.

Using the proper tools when making a refrigerant plumbing connection is very important. Improper tools or improper use of the tools can damage the refrigerant fittings. Always use two wrenches when loosening or tightening tube fittings. Use one wrench to hold one side of the connection stationary, while loosening or tightening the other side of the connection with a second wrench.

The refrigerant must be recovered completely from the system before opening any fitting or connection. Open the fittings with caution, even after the refrigerant has been recovered. If any pressure is noticed as a fitting is loosened, tighten the fitting and recover the refrigerant from the system again.

Do not discharge refrigerant into the atmosphere. Use an R-134a refrigerant recovery/recycling device that meets SAE Standard J2210.

The refrigerant system will remain chemically stable as long as pure, moisture-free R-134a refrigerant and refrigerant oil is used. Dirt, moisture, or air can upset this chemical stability. Operational troubles or serious damage can occur if foreign material is present in the refrigerant system.

When it is necessary to open the refrigerant system, have everything needed to service the system ready. The refrigerant system should not be left open to the atmosphere any longer than necessary. Cap or plug all lines and fittings as soon as they are opened to prevent the entrance of dirt and moisture. All lines and components in parts stock should be capped or sealed until they are to be installed.

All tools, including the refrigerant recycling equipment, the manifold gauge set, and test hoses should be kept clean and dry. All tools and equipment must be designed for R-134a refrigerant.

DIAGNOSIS AND TESTING - REFRIGERANT SYSTEM LEAKS

WARNING: REVIEW THE WARNINGS AND CAUTIONS IN THE FRONT OF THIS SECTION BEFORE PERFORMING THE FOLLOWING OPERATION. (Refer to 24 - HEATING & AIR CONDITIONING/ PLUMBING - WARNING) (Refer to 24 - HEATING & AIR CONDITIONING/PLUMBING - CAUTION)

If the air conditioning system is not cooling properly, determine if the refrigerant system is fully-charged. (Refer to 24 - HEATING & AIR CONDITIONING - DIAGNOSIS AND TESTING - A/C PERFORMANCE)

An electronic leak detector designed for R-134a refrigerant is recommended for locating and confirming refrigerant system leaks. Refer to the operating instructions supplied by the equipment manufacturer for proper care and use of this equipment.

An oily residue on or near refrigerant system lines, connector fittings, components, or component seals can indicate the general location of a possible refrigerant leak. However, the exact leak location should be confirmed with an electronic leak detector prior to component repair or replacement.

To detect a leak in the refrigerant system, perform one of the following procedures:

SYSTEM EMPTY

(1) Evacuate the refrigerant system. (Refer to 24 - HEATING & AIR CONDITIONING/PLUMBING - STANDARD PROCEDURE - REFRIGERANT SYSTEM EVACUATE)

(2) Connect and dispense 0.283 kilograms (0.625 pounds or 10 ounces) of R-134a refrigerant into the evacuated refrigerant system. (Refer to 24 - HEATING & AIR CONDITIONING/PLUMBING - STANDARD PROCEDURE - REFRIGERANT SYSTEM CHARGE)

(3) Position the vehicle in a wind-free work area. This will aid in detecting small leaks.

(4) With the engine not running, use a electronic R-134a leak detector and search for leaks. Because R-134a refrigerant is heavier than air, the leak detector probe should be moved slowly along the bottom side of all refrigerant lines, connector fittings and components.

PLUMBING (Continued)

(5) To inspect the evaporator coil for leaks, insert the electronic leak detector probe into the center instrument panel outlet. Set the blower motor switch to the lowest speed position, the A/C button in the On position, and select the Recirculation Mode.

SYSTEM LOW

(1) Position the vehicle in a wind-free work area. This will aid in detecting small leaks.

(2) Bring the refrigerant system up to operating temperature and pressure. This is done by allowing the engine to run with the air conditioning system turned on for five minutes.

(3) With the engine not running, use a electronic R-134a leak detector and search for leaks. Because R-134a refrigerant is heavier than air, the leak detector probe should be moved slowly along the bottom side of all refrigerant lines, connector fittings and components.

(4) To inspect the evaporator coil for leaks, insert the electronic leak detector probe into the center instrument panel outlet. Set the blower motor switch to the lowest speed position, the A/C button in the On position, and select the Recirculation Mode.

STANDARD PROCEDURE - REFRIGERANT SYSTEM SERVICE EQUIPMENT

WARNING: EYE PROTECTION MUST BE WORN WHEN SERVICING AN AIR CONDITIONING REFRIGERANT SYSTEM. TURN OFF (ROTATE CLOCKWISE) ALL VALVES ON THE EQUIPMENT BEING USED, BEFORE CONNECTING TO OR DISCONNECTING FROM THE REFRIGERANT SYSTEM. FAILURE TO OBSERVE THESE WARNINGS MAY RESULT IN PERSONAL INJURY.

WARNING: REVIEW THE WARNINGS AND CAUTIONS IN THE FRONT OF THIS SECTION BEFORE PERFORMING THE FOLLOWING OPERATION. (Refer to 24 - HEATING & AIR CONDITIONING/ PLUMBING - WARNING) (Refer to 24 - HEATING & AIR CONDITIONING/PLUMBING - CAUTION)

When servicing the air conditioning system, a R-134a refrigerant recovery/recycling/charging station that meets SAE Standard J2210 must be used. Contact an automotive service equipment supplier for refrigerant recovery/recycling/charging equipment. Refer to the operating instructions supplied by the equipment manufacturer for proper care and use of this equipment.

A manifold gauge set may be needed with some recovery/recycling/charging equipment (Fig. 1). The service hoses on the gauge set being used should have manual (turn wheel), or automatic back-flow valves at the service port connector ends. This will prevent refrigerant from being released into the atmosphere.

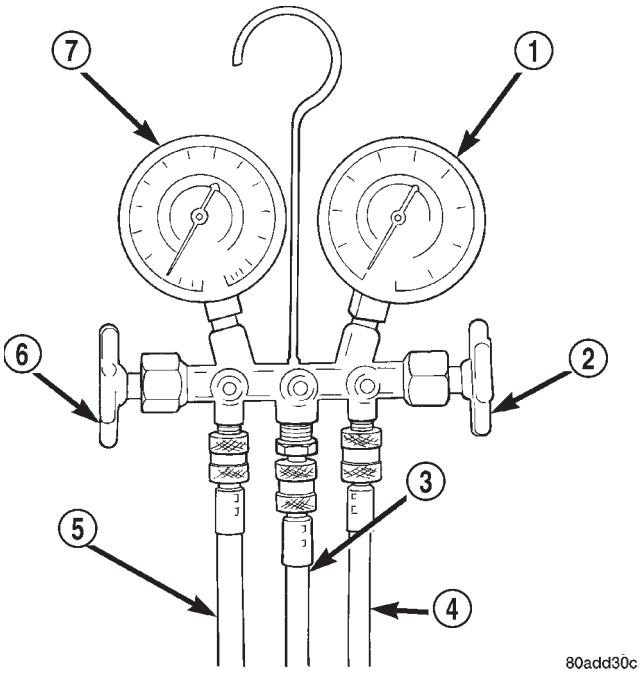

Fig. 1 MANIFOLD GAUGE SET - TYPICAL

1 - HIGH PRESSURE GAUGE
2 - VALVE
3 - VACUUM/REFRIGERANT HOSE (YELLOW W/ BLACK STRIPE)
4 - HIGH PRESSURE HOSE (RED W/ BLACK STRIPE)
5 - LOW PRESSURE HOSE (BLUE W/ BLACK STRIPE)
6 - VALVE
7 - LOW PRESSURE GAUGE

MANIFOLD GAUGE SET CONNECTIONS

CAUTION: Do not use an R-12 manifold gauge set on an R-134a system. The refrigerants are not compatible and system damage will result.

LOW PRESSURE GAUGE HOSE The low pressure hose (Blue with Black stripe) attaches to the suction service port. This port is located on the suction line between the accumulator outlet and the compressor.

HIGH PRESSURE GAUGE HOSE The high pressure hose (Red with Black stripe) attaches to the discharge service port. This port is located on the discharge line between the compressor and the condenser inlet.

RECOVERY/RECYCLING/EVACUATION/CHARGING HOSE The center manifold hose (Yellow, or White, with Black stripe) is used to recover, evacuate, and charge the refrigerant system. When the low or high pressure valves on the manifold gauge set are opened, the refrigerant in the system will escape through this hose.

PLUMBING (Continued)

STANDARD PROCEDURE - REFRIGERANT RECOVERY

WARNING: REVIEW THE WARNINGS AND CAUTIONS IN THE FRONT OF THIS SECTION BEFORE PERFORMING THE FOLLOWING OPERATION. (Refer to 24 - HEATING & AIR CONDITIONING/ PLUMBING - WARNING) (Refer to 24 - HEATING & AIR CONDITIONING/PLUMBING - CAUTION)

A R-134a refrigerant recovery/recycling/charging station that meets SAE Standard J2210 must be used to recover the refrigerant from an R-134a refrigerant system. Refer to the operating instructions supplied by the equipment manufacturer for the proper care and use of this equipment.

STANDARD PROCEDURE - REFRIGERANT SYSTEM EVACUATE

WARNING: REVIEW THE WARNINGS AND CAUTIONS IN THE FRONT OF THIS SECTION BEFORE PERFORMING THE FOLLOWING OPERATION. (Refer to 24 - HEATING & AIR CONDITIONING/ PLUMBING - WARNING) (Refer to 24 - HEATING & AIR CONDITIONING/PLUMBING - CAUTION)

If the refrigerant system has been open to the atmosphere, it must be evacuated before the system can be charged. If moisture and air enters the system and becomes mixed with the refrigerant, the compressor head pressure will rise above acceptable operating levels. This will reduce the performance of the air conditioner and damage the compressor. Evacuating the refrigerant system will remove the air and boil the moisture out of the system at near room temperature. To evacuate the refrigerant system, use the following procedure:

(1) Connect a R-134a refrigerant recovery/recycling/charging station that meets SAE Standard J2210 and a manifold gauge set to the refrigerant system of the vehicle.

(2) Open the low and high side valves and start the charging station vacuum pump. When the suction gauge reads 88 kPa (26 in. Hg.) vacuum or greater, close all of the valves and turn off the vacuum pump.

(a) If the refrigerant system fails to reach the specified vacuum, the system has a leak that must be corrected. (Refer to 24 - HEATING & AIR CONDITIONING/PLUMBING - DIAGNOSIS AND TESTING - REFRIGERANT SYSTEM LEAKS)

(b) If the refrigerant system maintains the specified vacuum for five minutes, restart the vacuum pump, open the suction and discharge valves and evacuate the system for an additional ten minutes.

(3) Close all of the valves, and turn off the charging station vacuum pump.

(4) The refrigerant system is now ready to be charged with R-134a refrigerant. (Refer to 24 - HEATING & AIR CONDITIONING/PLUMBING - STANDARD PROCEDURE - REFRIGERANT SYSTEM CHARGE)

STANDARD PROCEDURE - REFRIGERANT SYSTEM CHARGE

WARNING: REVIEW THE WARNINGS AND CAUTIONS IN THE FRONT OF THIS SECTION BEFORE PERFORMING THE FOLLOWING OPERATION. (Refer to 24 - HEATING & AIR CONDITIONING/ PLUMBING - WARNING) (Refer to 24 - HEATING & AIR CONDITIONING/PLUMBING - CAUTION)

After the refrigerant system has been tested for leaks and evacuated, a refrigerant charge can be injected into the system. (Refer to 24 - HEATING & AIR CONDITIONING/PLUMBING - SPECIFICATIONS - CHARGE CAPACITY)

A R-134a refrigerant recovery/recycling/charging station that meets SAE Standard J2210 must be used to charge the refrigerant system with R-134a refrigerant. Refer to the operating instructions supplied by the equipment manufacturer for proper care and use of this equipment.

PARTIAL CHARGE METHOD

WARNING: REVIEW THE WARNINGS AND CAUTIONS IN THE FRONT OF THIS SECTION BEFORE PERFORMING THE FOLLOWING OPERATION. (Refer to 24 - HEATING & AIR CONDITIONING/ PLUMBING - WARNING) (Refer to 24 - HEATING & AIR CONDITIONING/PLUMBING - CAUTION)

The partial charge method is used to add a partial charge to a refrigerant system that is low on refrigerant. To perform this procedure the evaporator inlet and outlet tube temperatures are measured. The temperature difference is measured with a temperature meter with one or two clamp-on thermocouple probes. The difference between the evaporator inlet and outlet tube temperatures will determine the amount of refrigerant needed.

Before adding a partial refrigerant charge, check for refrigerant system leaks. (Refer to 24 - HEATING & AIR CONDITIONING/PLUMBING - DIAGNOSIS AND TESTING - REFRIGERANT SYSTEM LEAKS) If a leak is found, make the necessary repairs before attempting a full or partial refrigerant charge.

(1) Attach a manifold gauge set to the refrigerant system service ports.

PLUMBING (Continued)

(2) Attach the two clamp-on thermocouple probes to the inlet and outlet tubes of the evaporator coil.

• If a single thermocouple probe is used, attach the probe to the evaporator inlet tube just before the collar of the refrigerant line connector fitting. The probe must make contact with the bottom surface of the evaporator inlet tube.

• If dual thermocouple probes are used, attach probe 1 to the evaporator inlet tube, and probe 2 to the evaporator outlet tube. Attach both probes to the evaporator tubes just before the collar of the refrigerant line connector fittings. The probes must make contact with the bottom surfaces of the evaporator inlet and outlet tubes.

(3) Open all of the windows or doors of the passenger compartment.

(4) Set the A/C button on the A/C Heater controls to the on position, the temperature control knob in the full cool position, select Recirculation Mode, and place the blower motor switch in the highest speed position.

(5) Start the engine and hold the engine idle speed at 1,000 rpm. Allow the engine to warm up to normal operating temperature.

(6) The compressor clutch may cycle, depending upon ambient temperature, humidity, and the refrigerant system charge level. If the compressor clutch cycles, unplug the wire harness connector from the low pressure cycling clutch switch on the accumulator. Install a jumper wire between the two cavities of the switch wire harness connector.

(7) Hold the engine idle speed at 1,000 rpm.

(8) Allow three to five minutes for the refrigerant system to stabilize, then record the temperatures of the evaporator inlet and outlet tubes.

• If a single probe is used, record the temperature of the evaporator inlet tube. Then remove the probe from the inlet tube and attach it to the evaporator outlet tube just before the collar of the refrigerant line connector fitting. The probe must make contact with the bottom surface of the evaporator outlet tube. Allow the thermocouple and meter time to stabilize, then record the temperature of the evaporator outlet tube. Subtract the inlet tube temperature reading from the outlet tube temperature reading.

• If dual probes are used, record the temperatures of both the evaporator inlet and outlet tubes. Then subtract the inlet tube temperature reading from the outlet tube temperature reading.

(9) If the measured temperature differential is higher than 22° C to 26° C (40° F to 47° F), add 0.4 kilograms (14 ounces) of refrigerant.

(10) Allow three to five minutes for the refrigerant system to stabilize, then take a second set of thermocouple measurements. Record the temperature difference to determine if an additional charge is required.

(11) Record the compressor discharge pressure. If the reading is higher than the pressure shown in the Compressor Discharge Pressure Chart, the system could be overcharged. If the reading is equal to, or lower, than the pressure shown in the chart, continue with this procedure.

Compressor Discharge Pressure Chart						
Ambient Temperature	16°C (60°F)	21°C (70°F)	27°C (80°F)	32°C (90°F)	38°C (100°F)	43°C (110°F)
Compressor Discharge Pressure	1515 kPa (220 psi)	1655 kPa (240 psi)	1790 kPa (260psi)	2070 kPa (300 psi)	2345 kPa (340 psi)	2690 kPa (390 psi)

(12) **EXAMPLE:** The ambient temperature is 21° C (70° F). The evaporator inlet tube temperature is 12° C (54° F) and the evaporator outlet tube temperature is 10° C (50° F). Subtract the inlet tube temperature from the outlet tube temperature. The difference is -2° C (-4° F). With a -2° C (-4° F) temperature differential at 21° C (70° F) ambient temperature, the system is fully charged.

(13) Add enough refrigerant to bring the refrigerant system up to a full charge.

(14) Remove the jumper wire from the low pressure cycling clutch switch wire harness connector and plug the connector back into the switch.

SPECIFICATIONS

CHARGE CAPACITY

The R-134a refrigerant system charge capacity for this vehicle is 0.680 kilograms (1.50 pounds/24 ounces).

A/C COMPRESSOR

DESCRIPTION - A/C COMPRESSOR

The air conditioning system uses a Nippondenso 10PA17 ten cylinder, double-acting swash plate-type compressor on all models. This compressor has a fixed displacement of 170 cubic centimeters (10.374

A/C COMPRESSOR (Continued)

cubic inches), and has both the suction and discharge ports located on the cylinder head. A label identifying the use of R-134a refrigerant is located on the compressor.

DESCRIPTION - HIGH PRESSURE RELIEF VALVE

A high pressure relief valve is located on the compressor manifold, which is on the side of the compressor. This mechanical valve is designed to vent refrigerant from the system to protect against damage to the compressor and other system components, caused by condenser air flow restriction or an overcharge of refrigerant.

OPERATION - A/C COMPRESSOR

The compressor is driven by the engine through an electric clutch, drive pulley and belt arrangement. The compressor is lubricated by refrigerant oil that is circulated throughout the refrigerant system with the refrigerant.

The compressor draws in low-pressure refrigerant vapor from the evaporator through its suction port. It then compresses the refrigerant into a high-pressure, high-temperature refrigerant vapor, which is then pumped to the condenser through the compressor discharge port.

The compressor cannot be repaired. If faulty or damaged, the entire compressor assembly must be replaced. The compressor clutch, pulley, and coil, are available for service.

OPERATION - HIGH PRESSURE RELIEF VALVE

The high pressure relief valve vents the system when a discharge pressure of 3445 to 4135 kPa (500 to 600 psi) or above is reached. The valve closes when a minimum discharge pressure of 2756 kPa (400 psi) is reached.

The high pressure relief valve vents only enough refrigerant to reduce the system pressure, and then re-seats itself. The majority of the refrigerant is conserved in the system. If the valve vents refrigerant, it does not mean that the valve is faulty.

The high pressure relief valve is a factory-calibrated unit. The valve cannot be adjusted or repaired, and must not be removed or otherwise disturbed. The valve is only serviced as a part of the compressor assembly.

DIAGNOSIS AND TESTING - COMPRESSOR NOISE

When investigating an air conditioning related noise, you must first know the conditions under which the noise occurs. These conditions include: weather, vehicle speed, transmission in gear or neutral, engine speed, engine temperature, and any other special conditions. Noises that develop during air conditioning operation can often be misleading. For example: What sounds like a failed front bearing or connecting rod, may be caused by loose bolts, nuts, mounting brackets, or a loose compressor clutch assembly.

Drive belts are speed sensitive. At different engine speeds and depending upon belt tension, belts can develop noises that are mistaken for a compressor noise. Improper belt tension can cause a misleading noise when the compressor clutch is engaged, which may not occur when the compressor clutch is disengaged. Check the serpentine drive belt condition and tension as described in Cooling before beginning this procedure.

(1) Select a quiet area for testing. Duplicate the complaint conditions as much as possible. Switch the compressor on and off several times to clearly identify the compressor noise. Listen to the compressor while the clutch is engaged and disengaged. Probe the compressor with an engine stethoscope or a long screwdriver with the handle held to your ear to better localize the source of the noise.

(2) Loosen all of the compressor mounting hardware and retighten. Tighten the compressor clutch mounting nut. Be certain that the clutch coil is mounted securely to the compressor, and that the clutch plate and pulley are properly aligned and have the correct air gap. (Refer to 24 - HEATING & AIR CONDITIONING/CONTROLS/A/C COMPRESSOR CLUTCH - INSTALLATION)

(3) To duplicate a high-ambient temperature condition (high head pressure), restrict the air flow through the condenser. Install a manifold gauge set to be certain that the discharge pressure does not exceed 2760 kPa (400 psi).

(4) Check the refrigerant system plumbing for incorrect routing, rubbing or interference, which can cause unusual noises. Also check the refrigerant lines for kinks or sharp bends that will restrict refrigerant flow, which can cause noises. (Refer to 24 - HEATING & AIR CONDITIONING/PLUMBING - CAUTION - REFRIGERANT HOSES/LINES/TUBES PRECAUTIONS)

(5) If the noise is from opening and closing of the high pressure relief valve, reclaim, evacuate, and recharge the refrigerant system. (Refer to 24 - HEATING & AIR CONDITIONING/PLUMBING - STANDARD PROCEDURE - REFRIGERANT RECOVERY) (Refer to 24 - HEATING & AIR CONDITIONING/PLUMBING - STANDARD PROCEDURE - REFRIGERANT SYSTEM EVACUATE) (Refer to 24 - HEATING & AIR CONDITIONING/PLUMBING - STANDARD PROCEDURE - REFRIGERANT SYSTEM CHARGE)If the high pressure relief valve still does not seat properly, replace the a/c compressor.

A/C COMPRESSOR (Continued)

(Refer to 24 - HEATING & AIR CONDITIONING/ PLUMBING/A/C COMPRESSOR - REMOVAL)

(6) If the noise is from liquid slugging on the suction line, replace the accumulator. (Refer to 24 - HEATING & AIR CONDITIONING/PLUMBING/ACCUMULATOR - REMOVAL) Check the refrigerant oil level and the refrigerant system charge. (Refer to 24 - HEATING & AIR CONDITIONING/PLUMBING/ REFRIGERANT OIL - STANDARD PROCEDURE) (Refer to 24 - HEATING & AIR CONDITIONING/ PLUMBING - SPECIFICATIONS - CHARGE CAPACITY) If the liquid slugging condition continues following accumulator replacement, replace the compressor.

(7) If the noise continues, replace the compressor and repeat Step 1.

REMOVAL

The compressor may be removed and repositioned without disconnecting the refrigerant lines or discharging the refrigerant system. Discharging is not necessary if servicing the compressor clutch or clutch coil, the engine, the cylinder head, or the generator.

WARNING: REVIEW THE WARNINGS AND CAUTIONS IN THE FRONT OF THIS SECTION BEFORE PERFORMING THE FOLLOWING OPERATION. (Refer to 24 - HEATING & AIR CONDITIONING/ PLUMBING - WARNING) (Refer to 24 - HEATING & AIR CONDITIONING/PLUMBING - CAUTION)

(1) Recover the refrigerant from the system. (Refer to 24 - HEATING & AIR CONDITIONING/PLUMBING - STANDARD PROCEDURE - REFRIGERANT RECOVERY)

(2) Disconnect and isolate the battery negative cable.

(3) Remove the serpentine drive belt. Refer to Cooling for the procedures.

(4) Unplug the compressor clutch coil wire harness connector.

(5) Remove the (2) refrigerant line retaining bolts that secure the suction line and discharge line to the compressor. Install plugs in, or tape over all of the opened refrigerant fittings.

(6) Remove the bolts that secure the compressor (Fig. 2) or (Fig. 3) and (Fig. 4).

(7) Remove the compressor.

INSTALLATION

WARNING: REVIEW THE WARNINGS AND CAUTIONS IN THE FRONT OF THIS SECTION BEFORE PERFORMING THE FOLLOWING OPERATION. (Refer to 24 - HEATING & AIR CONDITIONING/ PLUMBING - WARNING) (Refer to 24 - HEATING & AIR CONDITIONING/PLUMBING - CAUTION)

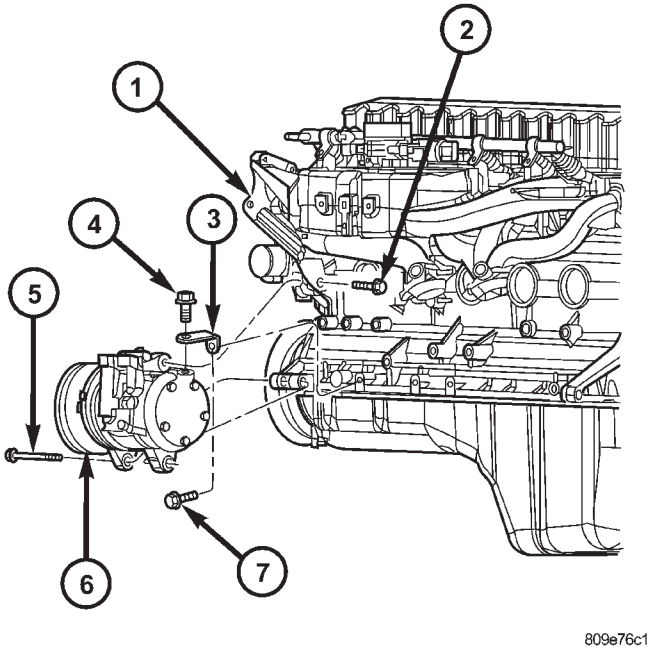

Fig. 2 COMPRESSOR REMOVE/INSTALL - 4.0L ENGINE

1 - POWER STEERING PUMP MOUNTING BRACKET
2 - BOLT
3 - BRACE
4 - BOLT
5 - BOLT
6 - A/C COMPRESSOR
7 - BOLT

Any kinks or sharp bends in the refrigerant plumbing will reduce the capacity of the entire air conditioning system. Kinks and sharp bends reduce the flow of refrigerant in the system. A good rule for the flexible hose refrigerant lines is to keep the radius of all bends at least ten times the diameter of the hose. In addition, the flexible hose refrigerant lines should be routed so they are at least 80 millimeters (3 inches) from the exhaust manifold.

High pressures are produced in the refrigerant system when the air conditioning compressor is operating. Extreme care must be exercised to make sure that each of the refrigerant system connections is pressure-tight and leak free. It is a good practice to inspect all flexible hose refrigerant lines at least once a year to make sure they are in good condition and properly routed.

A/C COMPRESSOR (Continued)

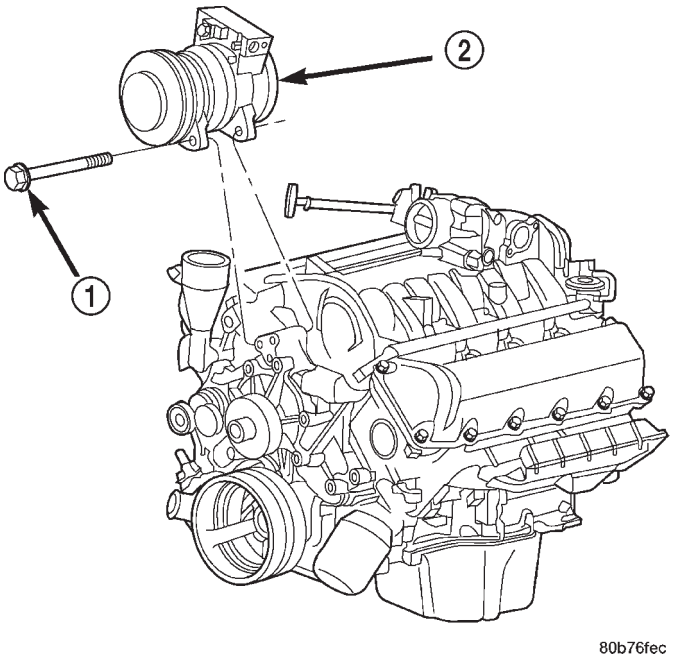

Fig. 3 COMPRESSOR REMOVE/INSTALL - V8 ENGINE - LEFT VIEW

1 - BOLT
2 - A/C COMPRESSOR

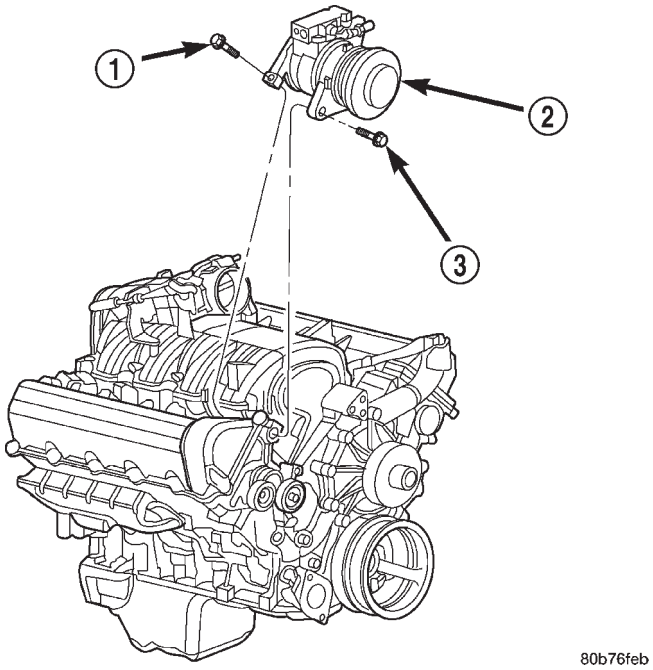

Fig. 4 COMPRESSOR REMOVE/INSTALL - V8 ENGINE - RIGHT VIEW

1 - BOLT
2 - A/C COMPRESSOR
3 - BOLT

NOTE: If a replacement compressor is being installed, be certain to check the refrigerant oil level. (Refer to 24 - HEATING & AIR CONDITIONING/ PLUMBING/REFRIGERANT OIL - STANDARD PROCEDURE) Use only refrigerant oil of the type recommended for the compressor in the vehicle. (Refer to 24 - HEATING & AIR CONDITIONING/ PLUMBING/REFRIGERANT OIL - DESCRIPTION)

(1) Install the compressor. Tighten the 4.0L mounting bolts fastening the compressor to the block to 45-65 N·m (35-50 ft. lbs.). Tighten the mounting bolts holding the rear brace to the compressor and block to 40-55 N·m (30-40 ft. lbs.). Tighten the 4.7L compressor front mounting screws to 45-65 N·m (35-50 ft. lbs.), and the rear mounting screws to 35-45 N·m (25-35 ft. lbs.).

(2) Remove the tape or plugs from all of the opened refrigerant line fittings. Install the suction line and discharge line fittings to the manifold on the compressor. Tighten the mounting bolts to 25.4 N·m (225 in. lbs.).

(3) Install the serpentine drive belt. Refer to Cooling for the procedures.

(4) Plug in the compressor clutch coil wire harness connector.

(5) Connect the battery negative cable.

(6) Evacuate the refrigerant system. (Refer to 24 - HEATING & AIR CONDITIONING/PLUMBING - STANDARD PROCEDURE - REFRIGERANT SYSTEM EVACUATE)

(7) Charge the refrigerant system. (Refer to 24 - HEATING & AIR CONDITIONING/PLUMBING - STANDARD PROCEDURE - REFRIGERANT SYSTEM CHARGE)

A/C CONDENSER

DESCRIPTION

The condenser is located in the air flow in front of the engine cooling radiator. The condenser is a heat exchanger that allows the high-pressure refrigerant gas being discharged by the compressor to give up its heat to the air passing over the condenser fins.

OPERATION

When the refrigerant gas gives up its heat, it condenses. When the refrigerant leaves the condenser, it has become a high-pressure liquid refrigerant. The volume of air flowing over the condenser fins is critical to the proper cooling performance of the air conditioning system. Therefore, it is important that there are no objects placed in front of the radiator grille openings in the front of the vehicle or foreign material on the condenser fins that might obstruct proper air flow. Also, any factory-installed air seals or

A/C CONDENSER (Continued)

shrouds must be properly reinstalled following radiator or condenser service.

The condenser cannot be repaired and, if faulty or damaged, it must be replaced.

REMOVAL

WARNING: REVIEW THE WARNINGS AND CAUTIONS IN THE FRONT OF THIS SECTION BEFORE PERFORMING THE FOLLOWING OPERATION. (Refer to 24 - HEATING & AIR CONDITIONING/ PLUMBING - WARNING) (Refer to 24 - HEATING & AIR CONDITIONING/PLUMBING - CAUTION)

WARNING: REVIEW THE WARNINGS AND CAUTIONS IN THE FRONT OF THIS GROUP BEFORE PERFORMING THE FOLLOWING OPERATION.

CAUTION: Before removing the condenser, note the location of each of the radiator and condenser air seals. These seals are used to direct air through the condenser and radiator. The air seals must be reinstalled in their proper locations in order for the air conditioning and engine cooling systems to perform as designed.

(1) Disconnect and isolate the battery negative cable.

(2) Recover the refrigerant from the refrigerant system. (Refer to 24 - HEATING & AIR CONDITIONING/PLUMBING - STANDARD PROCEDURE - REFRIGERANT RECOVERY)

(3) Remove the screws attaching the grille and headlamp mounting module to the upper crossmember of the vehicle. Refer to Body for this and further steps in the procedure.

(4) Remove the headlamps from their mounts.

(5) Remove the nuts that secure the hood latch and brace to the upper crossmember.

(6) The radiator upper crossmember can be adjusted left or right through the use of its slotted mounting holes. Before removal, mark the original position of the crossmember.

(7) Remove the bolts that secure the radiator to the upper crossmember and set it aside (Fig. 5).

(8) Remove the engine air filter inlet duct secured at the headlamp mounting module.

(9) Remove the headlamp mounting module and front fascia for access to the condenser and fittings.

(10) Disconnect the discharge line and liquid line refrigerant line fittings from the condenser. Install plugs in, or tape over all of the opened refrigerant line fittings.

(11) Remove the bolts that secure the upper condenser and transmission cooler.

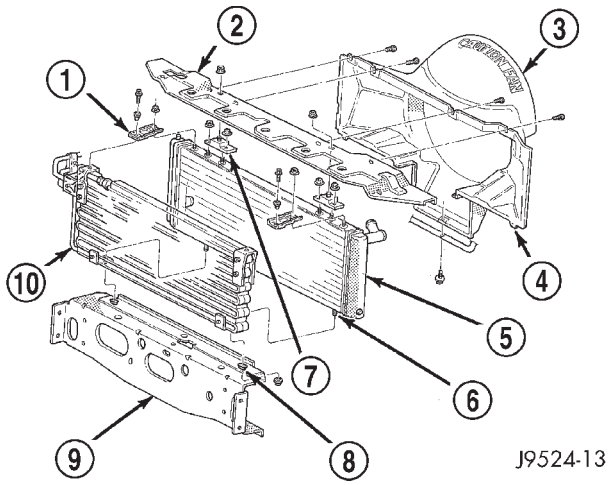

Fig. 5 CONDENSER MOUNTING - TYPICAL

1 - CONDENSER-TO-RADIATOR MOUNTING BRACKETS (2)
2 - UPPER CROSSMEMBER
3 - FAN SHROUD
4 - ALIGNMENT TABS
5 - RADIATOR
6 - ALIGNMENT DOWELS (2)
7 - RUBBER ISOLATORS (2)
8 - RUBBER GROMMETS (2)
9 - LOWER CROSSMEMBER
10 - CONDENSER

(12) Carefully lift the condenser out of the vehicle.

INSTALLATION

WARNING: REVIEW THE WARNINGS AND CAUTIONS IN THE FRONT OF THIS SECTION BEFORE PERFORMING THE FOLLOWING OPERATION. (Refer to 24 - HEATING & AIR CONDITIONING/ PLUMBING - WARNING) (Refer to 24 - HEATING & AIR CONDITIONING/PLUMBING - CAUTION)

Any kinks or sharp bends in the refrigerant plumbing will reduce the capacity of the entire air conditioning system. Kinks and sharp bends reduce the flow of refrigerant in the system. A good rule for the flexible hose refrigerant lines is to keep the radius of all bends at least ten times the diameter of the hose. In addition, the flexible hose refrigerant lines should

A/C CONDENSER (Continued)

be routed so they are at least 80 millimeters (3 inches) from the exhaust manifold.

High pressures are produced in the refrigerant system when the air conditioning compressor is operating. Extreme care must be exercised to make sure that each of the refrigerant system connections is pressure-tight and leak free. It is a good practice to inspect all flexible hose refrigerant lines at least once a year to make sure they are in good condition and properly routed.

CAUTION: Before removing the condenser, note the location of each of the radiator and condenser air seals. These seals are used to direct air through the condenser and radiator. The air seals must be reinstalled in their proper locations in order for the air conditioning and engine cooling systems to perform as designed.

(1) Carefully position the condenser in the vehicle.
(2) Install the bolts that secure the upper condenser and transmission cooler.
(3) Remove the tape or plugs from the refrigerant line fittings on the condenser inlet and the discharge line. Connect the discharge line to the condenser inlet. Tighten the retaining nut to 28 N·m (250 in. lbs.).
(4) Remove the tape or plugs from the refrigerant line fittings on the condenser outlet and the liquid line. Connect the liquid line to the condenser outlet. Tighten the retaining nut to 28 N·m (250 in. lbs.).
(5) Install the headlamp mounting module and front fascia. Refer to Body for the procedure.
(6) Install the engine air filter inlet duct.
(7) Install the bolts that secure the radiator to the upper crossmember.
(8) Install the nuts that secure the hood latch and brace to the upper crossmember.
(9) Install the headlamps in their mounts.
(10) Install the screws attaching the grille and headlamp mounting module to the upper crossmember of the vehicle. Refer to Body for this and further steps in the procedure.
(11) Evacuate and Recharge the refrigerant system. (Refer to 24 - HEATING & AIR CONDITIONING/PLUMBING - STANDARD PROCEDURE - REFRIGERANT SYSTEM EVACUATE) (Refer to 24 - HEATING & AIR CONDITIONING/PLUMBING - STANDARD PROCEDURE - REFRIGERANT SYSTEM CHARGE)
(12) Connect the battery negative cable.

NOTE: If the condenser is replaced, add 30 milliliters (1 fluid ounce) of refrigerant oil to the refrigerant system. Use only refrigerant oil of the type recommended for the compressor in the vehicle. (Refer to 24 - HEATING & AIR CONDITIONING/PLUMBING/REFRIGERANT OIL - DESCRIPTION)

A/C DISCHARGE LINE

REMOVAL

WARNING: REVIEW THE WARNINGS AND CAUTIONS IN THE FRONT OF THIS SECTION BEFORE PERFORMING THE FOLLOWING OPERATION. (Refer to 24 - HEATING & AIR CONDITIONING/PLUMBING - WARNING) (Refer to 24 - HEATING & AIR CONDITIONING/PLUMBING - CAUTION)

WARNING: REVIEW THE WARNINGS AND CAUTIONS IN THE FRONT OF THIS GROUP BEFORE PERFORMING THE FOLLOWING OPERATION.

(1) Disconnect and isolate the battery negative cable.
(2) Recover the refrigerant from the refrigerant system. (Refer to 24 - HEATING & AIR CONDITIONING/PLUMBING - STANDARD PROCEDURE - REFRIGERANT RECOVERY)
(3) Remove the a/c high pressure switch. (Refer to 24 - HEATING & AIR CONDITIONING/CONTROLS/A/C HIGH PRESSURE SWITCH - REMOVAL)
(4) Disconnect the discharge line from the condenser inlet. Install plugs in, or tape over all of the opened refrigerant line fittings.
(5) Remove the bolt that secures the discharge line fitting to compressor. Install plugs in, or tape over all of the opened refrigerant line fittings.
(6) Remove the discharge line assembly from the vehicle.

INSTALLATION

WARNING: REVIEW THE WARNINGS AND CAUTIONS IN THE FRONT OF THIS SECTION BEFORE PERFORMING THE FOLLOWING OPERATION. (Refer to 24 - HEATING & AIR CONDITIONING/PLUMBING - WARNING) (Refer to 24 - HEATING & AIR CONDITIONING/PLUMBING - CAUTION)

Any kinks or sharp bends in the refrigerant plumbing will reduce the capacity of the entire air conditioning system. Kinks and sharp bends reduce the flow of refrigerant in the system. A good rule for the flexible hose refrigerant lines is to keep the radius of all bends at least ten times the diameter of the hose. In addition, the flexible hose refrigerant lines should be routed so they are at least 80 millimeters (3 inches) from the exhaust manifold.

A/C DISCHARGE LINE (Continued)

High pressures are produced in the refrigerant system when the air conditioning compressor is operating. Extreme care must be exercised to make sure that each of the refrigerant system connections is pressure-tight and leak free. It is a good practice to inspect all flexible hose refrigerant lines at least once a year to make sure they are in good condition and properly routed.

(1) Remove the tape or plugs from the discharge line block fitting and the manifold on the compressor. Install the discharge line block fitting to the manifold on the compressor. Tighten the mounting bolt to 25.4 N·m (225 in. lbs.).

(2) Remove the tape or plugs from the refrigerant line fittings on the condenser inlet and the discharge line. Connect the discharge line to the condenser inlet. Tighten the retaining nut to 28 N·m (250 in. lbs.).

(3) Install the a/c high pressure switch. (Refer to 24 - HEATING & AIR CONDITIONING/CONTROLS/ A/C HIGH PRESSURE SWITCH - INSTALLATION)

(4) Connect the battery negative cable.

(5) Evacuate the refrigerant system. (Refer to 24 - HEATING & AIR CONDITIONING/PLUMBING - STANDARD PROCEDURE - REFRIGERANT SYSTEM EVACUATE)

(6) Charge the refrigerant system. (Refer to 24 - HEATING & AIR CONDITIONING/PLUMBING - STANDARD PROCEDURE - REFRIGERANT SYSTEM CHARGE)

LIQUID LINE

REMOVAL

WARNING: REVIEW THE WARNINGS AND CAUTIONS IN THE FRONT OF THIS SECTION BEFORE PERFORMING THE FOLLOWING OPERATION. (Refer to 24 - HEATING & AIR CONDITIONING/ PLUMBING - WARNING) (Refer to 24 - HEATING & AIR CONDITIONING/PLUMBING - CAUTION)

(1) Disconnect and isolate the battery negative cable.

(2) Recover the refrigerant from the refrigerant system. (Refer to 24 - HEATING & AIR CONDITIONING/PLUMBING - STANDARD PROCEDURE)

(3) Unsnap the plastic retainer clips that secure the liquid line to the inner fender shield and the dash panel in the engine compartment.

(4) Disengage the liquid line from the plastic retainer clips.

(5) Disconnect the liquid line from the evaporator inlet. Install plugs in, or tape over all of the opened refrigerant line fittings.

(6) Disconnect the liquid line from the condenser outlet. Install plugs in, or tape over all of the opened refrigerant line fittings.

(7) Remove the liquid line from the plastic clips that secure it to the right inner fender shield.

(8) Remove the liquid line from the vehicle.

INSTALLATION

WARNING: REVIEW THE WARNINGS AND CAUTIONS IN THE FRONT OF THIS SECTION BEFORE PERFORMING THE FOLLOWING OPERATION. (Refer to 24 - HEATING & AIR CONDITIONING/ PLUMBING - WARNING) (Refer to 24 - HEATING & AIR CONDITIONING/PLUMBING - CAUTION)

Any kinks or sharp bends in the refrigerant plumbing will reduce the capacity of the entire air conditioning system. Kinks and sharp bends reduce the flow of refrigerant in the system. A good rule for the flexible hose refrigerant lines is to keep the radius of all bends at least ten times the diameter of the hose. In addition, the flexible hose refrigerant lines should be routed so they are at least 80 millimeters (3 inches) from the exhaust manifold.

High pressures are produced in the refrigerant system when the air conditioning compressor is operating. Extreme care must be exercised to make sure that each of the refrigerant system connections is pressure-tight and leak free. It is a good practice to inspect all flexible hose refrigerant lines at least once a year to make sure they are in good condition and properly routed.

(1) Remove the tape or plugs from the refrigerant line fittings on the condenser outlet tube and the condenser end of the liquid line. Connect the liquid line to the condenser outlet. Tighten the retaining nut to 28 N·m (250 in. lbs.).

(2) Remove the tape or plugs from the refrigerant line fittings on the evaporator end of the liquid line and from the evaporator inlet tube. Connect the liquid line to the evaporator outlet. Tighten the retaining nut to 28 N·m (250 in. lbs.).

(3) Install the liquid line into the plastic retainer clips that secure it to the inner fender shield and the dash panel and snap the retainer clips closed.

(4) Connect the battery negative cable.

(5) Evacuate the refrigerant system. (Refer to 24 - HEATING & AIR CONDITIONING/PLUMBING - STANDARD PROCEDURE - REFRIGERANT SYSTEM EVACUATE)

(6) Charge the refrigerant system. (Refer to 24 - HEATING & AIR CONDITIONING/PLUMBING - STANDARD PROCEDURE - REFRIGERANT SYSTEM CHARGE)

SUCTION LINE

REMOVAL - 4.7L

WARNING: REVIEW THE WARNINGS AND CAUTIONS IN THE FRONT OF THIS SECTION BEFORE PERFORMING THE FOLLOWING OPERATION. (Refer to 24 - HEATING & AIR CONDITIONING/ PLUMBING - WARNING) (Refer to 24 - HEATING & AIR CONDITIONING/PLUMBING - CAUTION)

The suction line for 4.7L engine applications is serviced as part of the accumulator assembly. (Refer to 24 - HEATING & AIR CONDITIONING/PLUMBING/ ACCUMULATOR - REMOVAL - 4.7L)

REMOVAL - 4.0L

WARNING: REVIEW THE WARNINGS AND CAUTIONS IN THE FRONT OF THIS SECTION BEFORE PERFORMING THE FOLLOWING OPERATION. (Refer to 24 - HEATING & AIR CONDITIONING/ PLUMBING - WARNING) (Refer to 24 - HEATING & AIR CONDITIONING/PLUMBING - CAUTION)

(1) Disconnect and isolate the battery negative cable.

(2) Recover the refrigerant from the refrigerant system. (Refer to 24 - HEATING & AIR CONDITIONING/PLUMBING - STANDARD PROCEDURE - REFRIGERANT RECOVERY)

(3) Release the line retainer from the inner fender.

(4) Disconnect the suction line from the accumulator outlet. Install plugs in, or tape over all of the opened refrigerant line fittings.

(5) Remove the bolt that secures the suction line fitting to compressor. Install plugs in, or tape over all of the opened refrigerant line fittings.

(6) Remove the suction line assembly from the vehicle.

INSTALLATION - 4.0L

WARNING: REVIEW THE WARNINGS AND CAUTIONS IN THE FRONT OF THIS SECTION BEFORE PERFORMING THE FOLLOWING OPERATION. (Refer to 24 - HEATING & AIR CONDITIONING/ PLUMBING - WARNING) (Refer to 24 - HEATING & AIR CONDITIONING/PLUMBING - CAUTION)

Any kinks or sharp bends in the refrigerant plumbing will reduce the capacity of the entire air conditioning system. Kinks and sharp bends reduce the flow of refrigerant in the system. A good rule for the flexible hose refrigerant lines is to keep the radius of all bends at least ten times the diameter of the hose. In addition, the flexible hose refrigerant lines should be routed so they are at least 80 millimeters (3 inches) from the exhaust manifold.

High pressures are produced in the refrigerant system when the air conditioning compressor is operating. Extreme care must be exercised to make sure that each of the refrigerant system connections is pressure-tight and leak free. It is a good practice to inspect all flexible hose refrigerant lines at least once a year to make sure they are in good condition and properly routed.

(1) Secure the suction line in the retainer on the inner fender.

(2) Remove the tape or plugs from the suction line block fitting and the manifold on the compressor. Install the suction line block fitting to the manifold on the compressor. Tighten the mounting bolt to 25.4 N·m (225 in. lbs.).

(3) Remove the tape or plugs from the refrigerant line fittings on the accumulator outlet and the suction line. Connect the suction line to the accumulator outlet. Tighten the retaining nut to 28 N·m (250 in. lbs.).

(4) Connect the battery negative cable.

(5) Evacuate the refrigerant system. (Refer to 24 - HEATING & AIR CONDITIONING/PLUMBING - STANDARD PROCEDURE - REFRIGERANT SYSTEM EVACUATE)

(6) Charge the refrigerant system. (Refer to 24 - HEATING & AIR CONDITIONING/PLUMBING - STANDARD PROCEDURE - REFRIGERANT SYSTEM CHARGE)

A/C EVAPORATOR

DESCRIPTION

The evaporator coil is located in the HVAC housing, under the instrument panel. The evaporator coil is positioned in the HVAC housing so that all air that enters the housing must pass over the fins of the evaporator before it is distributed through the system ducts and outlets. However, air passing over the evaporator coil fins will only be conditioned when the compressor is engaged and circulating refrigerant through the evaporator coil tubes.

OPERATION

Refrigerant enters the evaporator from the orifice tube as a low-temperature, low-pressure liquid. As air flows over the fins of the evaporator, the humidity in the air condenses on the fins, and the heat from the air is absorbed by the refrigerant. Heat absorption causes the refrigerant to boil and vaporize. The refrigerant becomes a low-pressure gas before it leaves the evaporator.

A/C EVAPORATOR (Continued)

The evaporator coil cannot be repaired and, if faulty or damaged, it must be replaced.

REMOVAL

WARNING: ON VEHICLES EQUIPPED WITH AIRBAGS, DISABLE THE AIRBAG SYSTEM BEFORE ATTEMPTING ANY STEERING WHEEL, STEERING COLUMN, OR INSTRUMENT PANEL COMPONENT DIAGNOSIS OR SERVICE. DISCONNECT AND ISOLATE THE BATTERY NEGATIVE (GROUND) CABLE, THEN WAIT TWO MINUTES FOR THE AIRBAG SYSTEM CAPACITOR TO DISCHARGE BEFORE PERFORMING FURTHER DIAGNOSIS OR SERVICE. THIS IS THE ONLY SURE WAY TO DISABLE THE AIRBAG SYSTEM. FAILURE TO TAKE THE PROPER PRECAUTIONS COULD RESULT IN AN ACCIDENTAL AIRBAG DEPLOYMENT AND POSSIBLE PERSONAL INJURY.

WARNING: REVIEW THE WARNINGS AND CAUTIONS IN THE FRONT OF THIS SECTION BEFORE PERFORMING THE FOLLOWING OPERATION. (Refer to 24 - HEATING & AIR CONDITIONING/PLUMBING - WARNING) (Refer to 24 - HEATING & AIR CONDITIONING/PLUMBING - CAUTION)

(1) Remove and disassemble the HVAC housing. (Refer to 24 - HEATING & AIR CONDITIONING/DISTRIBUTION/HVAC HOUSING - REMOVAL) (Refer to 24 - HEATING & AIR CONDITIONING/DISTRIBUTION/HVAC HOUSING - DISASSEMBLY)

(2) Lift the evaporator coil unit out of the lower half of the HVAC housing (Fig. 6).

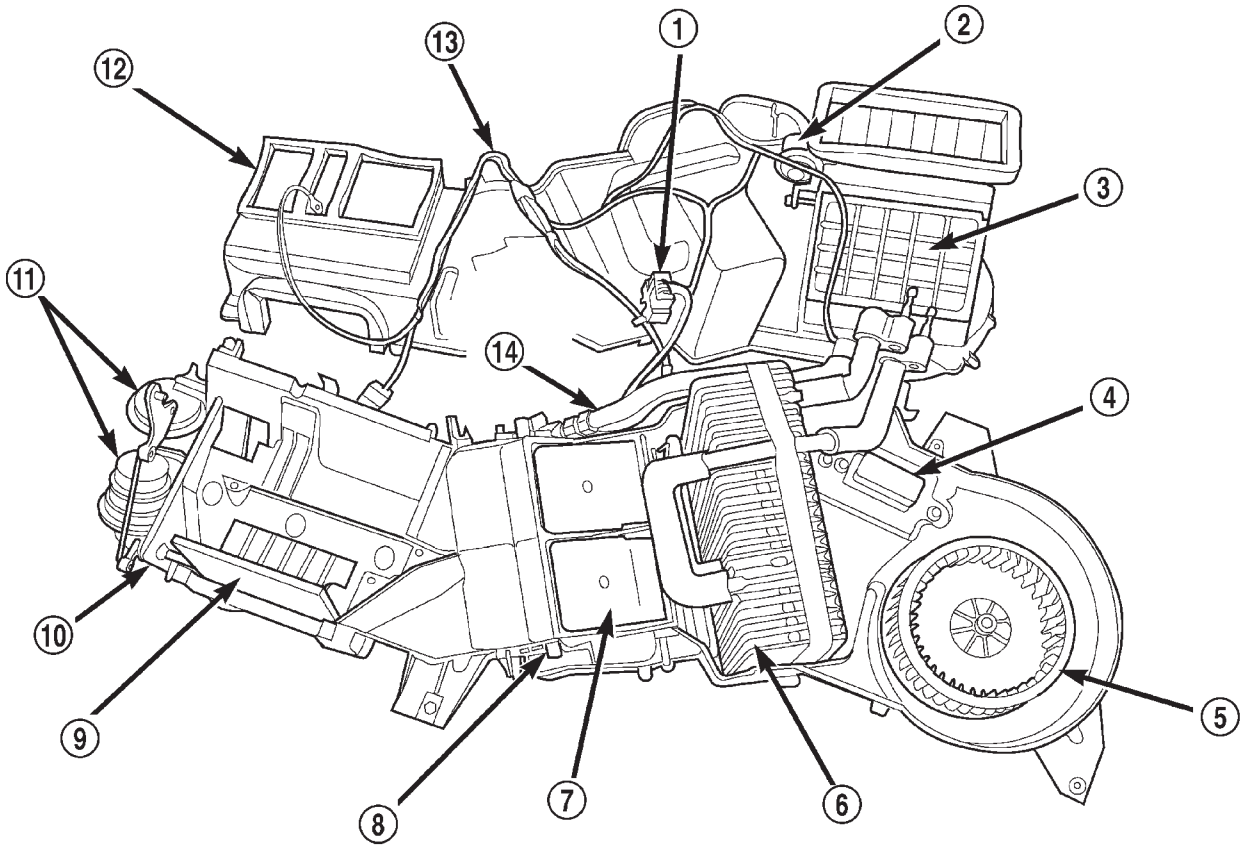

Fig. 6 UPPER AND LOWER HVAC HOUSING-SEPARATED

1 - ELECTRICAL CONNECTORS
2 - VACUUM ACTUATOR
3 - RECIRCULATION DOOR
4 - BLOWER MOTOR RESISTOR/CONTROLLER
5 - BLOWER WHEEL
6 - EVAPORATOR AND TUBES
7 - BLEND DOOR
8 - PIVOT SHAFT (MOTOR REMOVED)
9 - PANEL/OUTLET DOOR
10 - LOWER HOUSING
11 - VACUUM ACTUATORS
12 - UPPER HOUSING
13 - VACUUM HARNESS
14 - HEATER CORE AND TUBES

A/C EVAPORATOR (Continued)

INSTALLATION

WARNING: REVIEW THE WARNINGS AND CAUTIONS IN THE FRONT OF THIS SECTION BEFORE PERFORMING THE FOLLOWING OPERATION. (Refer to 24 - HEATING & AIR CONDITIONING/ PLUMBING - WARNING) (Refer to 24 - HEATING & AIR CONDITIONING/PLUMBING - CAUTION)

Any kinks or sharp bends in the refrigerant plumbing will reduce the capacity of the entire air conditioning system. Kinks and sharp bends reduce the flow of refrigerant in the system. A good rule for the flexible hose refrigerant lines is to keep the radius of all bends at least ten times the diameter of the hose. In addition, the flexible hose refrigerant lines should be routed so they are at least 80 millimeters (3 inches) from the exhaust manifold.

High pressures are produced in the refrigerant system when the air conditioning compressor is operating. Extreme care must be exercised to make sure that each of the refrigerant system connections is pressure-tight and leak free. It is a good practice to inspect all flexible hose refrigerant lines at least once a year to make sure they are in good condition and properly routed.

(1) Install the evaporator coil in the bottom half of the HVAC housing. Be certain that the evaporator foam insulator wrap is reinstalled.

(2) Reassemble the HVAC housing and install in the vehicle. (Refer to 24 - HEATING & AIR CONDITIONING/DISTRIBUTION/HVAC HOUSING - ASSEMBLY) (Refer to 24 - HEATING & AIR CONDITIONING/DISTRIBUTION/HVAC HOUSING - INSTALLATION)

NOTE: If the evaporator is replaced, add 60 milliliters (2 fluid ounces) of refrigerant oil to the refrigerant system.

ACCUMULATOR

DESCRIPTION

The accumulator is mounted in the engine compartment between the evaporator coil outlet tube and the compressor inlet.

OPERATION

Refrigerant enters the accumulator canister as a low pressure vapor through the inlet tube. Any liquid, oil-laden refrigerant falls to the bottom of the canister, which acts as a separator. A desiccant bag is mounted inside the accumulator canister to absorb any moisture which may have entered and become trapped within the refrigerant system (Fig. 7).

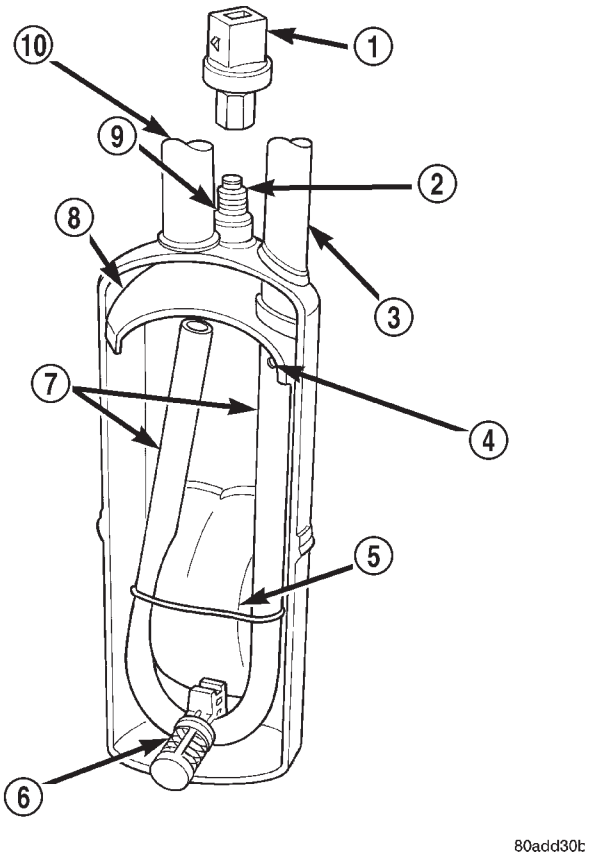

Fig. 7 ACCUMULATOR - TYPICAL

1 - A/C LOW PRESSURE SWITCH
2 - PRESSURE SWITCH FITTING
3 - OUTLET TO COMPRESSOR
4 - ANTI-SIPHON HOLE
5 - DESICCANT BAG
6 - OIL RETURN ORIFICE FILTER
7 - VAPOR RETURN TUBE
8 - ACCUMULATOR DOME
9 - O-RING SEAL
10 - INLET FROM EVAPORATOR

REMOVAL - 4.0L

WARNING: REVIEW THE WARNINGS AND CAUTIONS IN THE FRONT OF THIS SECTION BEFORE PERFORMING THE FOLLOWING OPERATION. (Refer to 24 - HEATING & AIR CONDITIONING/ PLUMBING - WARNING) (Refer to 24 - HEATING & AIR CONDITIONING/PLUMBING - CAUTION)

(1) Disconnect and isolate the battery negative cable.

(2) Remove the a/c low pressure switch from the accumulator. (Refer to 24 - HEATING & AIR CONDITIONING/CONTROLS/A/C LOW PRESSURE SWITCH - REMOVAL)

(3) Recover the refrigerant from the refrigerant system. (Refer to 24 - HEATING & AIR CONDI-

ACCUMULATOR (Continued)

TIONING/PLUMBING - STANDARD PROCEDURE - REFRIGERANT RECOVERY)

(4) Disconnect the accumulator line from the evaporator outlet. Install plugs in, or tape over all of the opened refrigerant line fittings.

(5) Remove the nut that secures the suction line to the accumulator. Install plugs in, or tape over all of the opened refrigerant line fittings.

(6) Loosen the screw that clamps the band of the accumulator support bracket around the accumulator (Fig. 8).

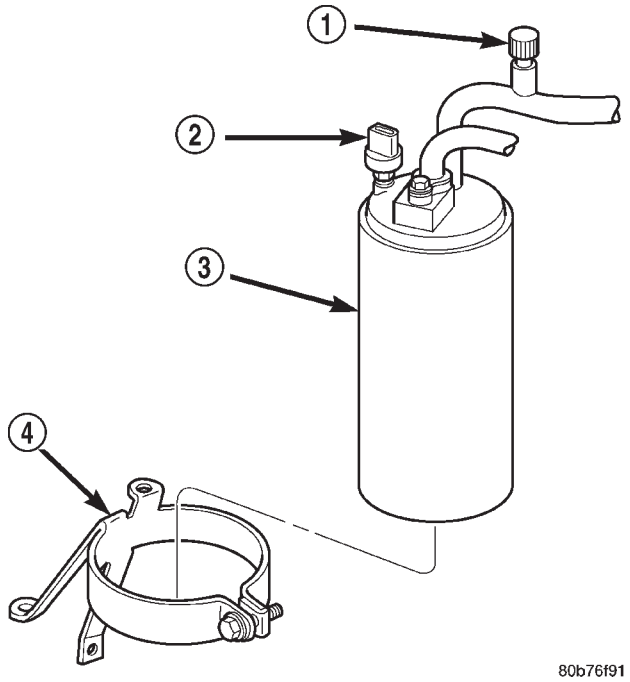

Fig. 8 ACCUMULATOR AND LOW PRESSURE SWITCH

1 - SERVICE PORT
2 - LOW PRESSURE SWITCH
3 - ACCUMULATOR
4 - SUPPORT BRACKET

(7) Remove the accumulator from the support bracket.

REMOVAL - 4.7L

WARNING: REVIEW THE WARNINGS AND CAUTIONS IN THE FRONT OF THIS SECTION BEFORE PERFORMING THE FOLLOWING OPERATION. (Refer to 24 - HEATING & AIR CONDITIONING/ PLUMBING - WARNING) (Refer to 24 - HEATING & AIR CONDITIONING/PLUMBING - CAUTION)

The suction lines from the evaporator outlet tube to the accumulator, and from the accumulator to the suction port of the compressor manifold are integral to the accumulator. If either suction line or the accumulator is faulty or damaged, the accumulator assembly must be replaced.

(1) Disconnect and isolate the battery negative cable.

(2) Remove the a/c low pressure switch from the accumulator. (Refer to 24 - HEATING & AIR CONDITIONING/CONTROLS/A/C LOW PRESSURE SWITCH - REMOVAL)

(3) Recover the refrigerant from the refrigerant system. (Refer to 24 - HEATING & AIR CONDITIONING/PLUMBING - STANDARD PROCEDURE - REFRIGERANT RECOVERY)

(4) Disconnect the suction line refrigerant line fitting from the evaporator outlet tube. Install plugs in, or tape over all of the opened refrigerant line fittings.

(5) Remove the bolt that secures the suction line block fitting to the manifold on the compressor. Install plugs in, or tape over all of the opened refrigerant line fittings.

(6) Loosen the screw that clamps the band of the accumulator support bracket around the accumulator.

(7) Remove the accumulator from the support bracket.

INSTALLATION - 4.0L

WARNING: REVIEW THE WARNINGS AND CAUTIONS IN THE FRONT OF THIS SECTION BEFORE PERFORMING THE FOLLOWING OPERATION. (Refer to 24 - HEATING & AIR CONDITIONING/ PLUMBING - WARNING) (Refer to 24 - HEATING & AIR CONDITIONING/PLUMBING - CAUTION)

Any kinks or sharp bends in the refrigerant plumbing will reduce the capacity of the entire air conditioning system. Kinks and sharp bends reduce the flow of refrigerant in the system. A good rule for the flexible hose refrigerant lines is to keep the radius of all bends at least ten times the diameter of the hose. In addition, the flexible hose refrigerant lines should be routed so they are at least 80 millimeters (3 inches) from the exhaust manifold.

High pressures are produced in the refrigerant system when the air conditioning compressor is operating. Extreme care must be exercised to make sure that each of the refrigerant system connections is pressure-tight and leak free. It is a good practice to inspect all flexible hose refrigerant lines at least once a year to make sure they are in good condition and properly routed.

(1) Install the accumulator through the band of the support bracket. Be certain that the index tab on the side of the accumulator is aligned with the notch in the support bracket band.

ACCUMULATOR (Continued)

(2) Tighten the clamp screw in the support bracket band to 12 N·m (105 in. lbs.).

(3) Remove the tape or plugs from the suction line fitting and the accumulator fitting. Install the suction line fitting to the accumulator. Tighten the mounting bolt to 28 N·m (250 in. lbs.).

(4) Remove the tape or plugs from the accumulator line and the evaporator outlet. Install the accumulator line to the evaporator. Tighten the retaining nut to 28 N·m (250 in. lbs.).

(5) Install the a/c low pressure switch onto the accumulator fitting. (Refer to 24 - HEATING & AIR CONDITIONING/CONTROLS/A/C LOW PRESSURE SWITCH - INSTALLATION)

(6) Connect the battery negative cable.

(7) Evacuate the refrigerant system. (Refer to 24 - HEATING & AIR CONDITIONING/PLUMBING - STANDARD PROCEDURE - REFRIGERANT SYSTEM EVACUATE)

(8) Charge the refrigerant system. (Refer to 24 - HEATING & AIR CONDITIONING/PLUMBING - STANDARD PROCEDURE - REFRIGERANT SYSTEM CHARGE)

NOTE: If the accumulator is replaced, add 120 milliliters (4 fluid ounces) of refrigerant oil to the refrigerant system. Use only refrigerant oil of the type recommended for the compressor in the vehicle. (Refer to 24 - HEATING & AIR CONDITIONING/PLUMBING/REFRIGERANT OIL - DESCRIPTION)

INSTALLATION - 4.7L

WARNING: REVIEW THE WARNINGS AND CAUTIONS IN THE FRONT OF THIS SECTION BEFORE PERFORMING THE FOLLOWING OPERATION. (Refer to 24 - HEATING & AIR CONDITIONING/PLUMBING - WARNING) (Refer to 24 - HEATING & AIR CONDITIONING/PLUMBING - CAUTION)

The suction lines from the evaporator outlet tube to the accumulator, and from the accumulator to the suction port of the compressor manifold are integral to the accumulator. If either suction line or the accumulator is faulty or damaged, the accumulator assembly must be replaced.

Any kinks or sharp bends in the refrigerant plumbing will reduce the capacity of the entire air conditioning system. Kinks and sharp bends reduce the flow of refrigerant in the system. A good rule for the flexible hose refrigerant lines is to keep the radius of all bends at least ten times the diameter of the hose. In addition, the flexible hose refrigerant lines should be routed so they are at least 80 millimeters (3 inches) from the exhaust manifold.

High pressures are produced in the refrigerant system when the air conditioning compressor is operating. Extreme care must be exercised to make sure that each of the refrigerant system connections is pressure-tight and leak free. It is a good practice to inspect all flexible hose refrigerant lines at least once a year to make sure they are in good condition and properly routed.

(1) Install the accumulator through the band of the support bracket. Be certain that the index tab on the side of the accumulator is aligned with the notch in the support bracket band.

(2) Tighten the clamp screw in the support bracket band to 12 N·m (105 in. lbs.).

(3) Remove the tape or plugs from the suction line block fitting and the manifold on the compressor. Install the suction line block fitting to the manifold on the compressor. Tighten the mounting bolt to 25.4 N·m (225 in. lbs.).

(4) Remove the tape or plugs from the refrigerant line fittings on the suction line and the evaporator outlet. Install the suction line to the evaporator. Tighten the retaining nut to 28 N·m (250 in. lbs.).

(5) Install the a/c low pressure switch onto the accumulator fitting. (Refer to 24 - HEATING & AIR CONDITIONING/CONTROLS/A/C LOW PRESSURE SWITCH - INSTALLATION)

(6) Connect the battery negative cable.

(7) Evacuate the refrigerant system. (Refer to 24 - HEATING & AIR CONDITIONING/PLUMBING - STANDARD PROCEDURE - REFRIGERANT SYSTEM EVACUATE)

(8) Charge the refrigerant system. (Refer to 24 - HEATING & AIR CONDITIONING/PLUMBING - STANDARD PROCEDURE - REFRIGERANT SYSTEM CHARGE)

NOTE: If the accumulator is replaced, add 120 milliliters (4 fluid ounces) of refrigerant oil to the refrigerant system. Use only refrigerant oil of the type recommended for the compressor in the vehicle. (Refer to 24 - HEATING & AIR CONDITIONING/PLUMBING/REFRIGERANT OIL - DESCRIPTION)

A/C ORIFICE TUBE

DESCRIPTION

The fixed orifice tube is installed in the liquid line between the outlet of the condenser and the inlet of the evaporator. The fixed orifice tube is located in the end of the liquid line that is closest to the condenser outlet tube.

The inlet end of the fixed orifice tube has a nylon mesh filter screen, which filters the refrigerant and helps to reduce the potential for blockage of the

A/C ORIFICE TUBE (Continued)

metering orifice by refrigerant system contaminants (Fig. 9). The outlet end of the tube has a nylon mesh diffuser screen. The O-rings on the plastic body of the fixed orifice tube seal the tube to the inside of the liquid line and prevent the refrigerant from bypassing the fixed metering orifice.

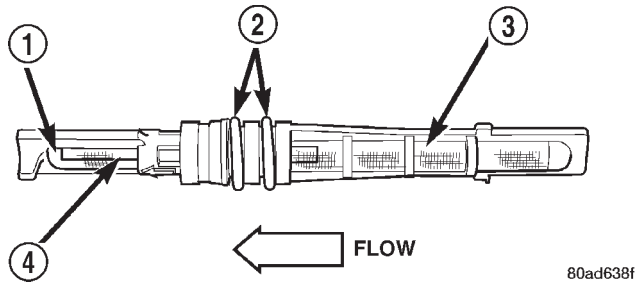

Fig. 9 FIXED ORIFICE TUBE - TYPICAL

1 - DIFFUSER SCREEN
2 - "O" RINGS
3 - INLET FILTER SCREENS
4 - ORIFICE

OPERATION

The fixed orifice tube is used to meter the flow of liquid refrigerant into the evaporator coil. The high-pressure liquid refrigerant from the condenser expands into a low-pressure liquid as it passes through the metering orifice and diffuser screen of the fixed orifice tube.

The fixed orifice tube cannot be repaired and, if faulty or plugged, the liquid line and fixed orifice tube unit must be replaced.

REMOVAL

The fixed orifice tube is located in the liquid line near the condenser. The orifice has filter screens on the inlet and outlet ends of the tube body. If the fixed orifice tube is faulty or plugged, the liquid line unit must be replaced. (Refer to 24 - HEATING & AIR CONDITIONING/PLUMBING/LIQUID LINE - REMOVAL)

HEATER CORE

DESCRIPTION

The heater core is located in the HVAC housing, under the instrument panel. It is a heat exchanger made of rows of tubes and fins.

OPERATION

Engine coolant is circulated through heater hoses to the heater core at all times. As the coolant flows through the heater core, heat removed from the engine is transferred to the heater core fins and tubes. Air directed through the heater core picks up the heat from the heater core fins. The temperature control door allows control of the heater output air temperature by controlling how much of the air flowing through the HVAC housing is directed through the heater core. The blower motor speed controls the volume of air flowing through the HVAC housing.

The heater core cannot be repaired and, if faulty or damaged, it must be replaced. Refer to Cooling for more information on the engine cooling system, the engine coolant and the heater hoses.

REMOVAL

WARNING: ON VEHICLES EQUIPPED WITH AIRBAGS, DISABLE THE AIRBAG SYSTEM BEFORE ATTEMPTING ANY STEERING WHEEL, STEERING COLUMN, OR INSTRUMENT PANEL COMPONENT DIAGNOSIS OR SERVICE. DISCONNECT AND ISOLATE THE BATTERY NEGATIVE (GROUND) CABLE, THEN WAIT TWO MINUTES FOR THE AIRBAG SYSTEM CAPACITOR TO DISCHARGE BEFORE PERFORMING FURTHER DIAGNOSIS OR SERVICE. THIS IS THE ONLY SURE WAY TO DISABLE THE AIRBAG SYSTEM. FAILURE TO TAKE THE PROPER PRECAUTIONS COULD RESULT IN AN ACCIDENTAL AIRBAG DEPLOYMENT AND POSSIBLE PERSONAL INJURY.

WARNING: REVIEW THE WARNINGS AND CAUTIONS IN THE FRONT OF THIS SECTION BEFORE PERFORMING THE FOLLOWING OPERATION. (Refer to 24 - HEATING & AIR CONDITIONING/PLUMBING - WARNING) (Refer to 24 - HEATING & AIR CONDITIONING/PLUMBING - CAUTION)

(1) Remove the HVAC housing from the vehicle. (Refer to 24 - HEATING & AIR CONDITIONING/DISTRIBUTION/HVAC HOUSING - REMOVAL)

(2) Remove the foam gasket surrounding the core tubes.

NOTE: Notice the orientation of the irregularly shaped gasket on the tubes. The gasket must be placed correctly to ensure proper sealing against the body during reinstallation .

(3) Remove the screws and retainers that secure the heater core and tubes to the HVAC housing (Fig. 10).

(4) Remove the mode door actuator if necessary, for clearance to remove the core.

(5) Lift the heater core straight up and out of the HVAC housing (Fig. 11).

HEATER CORE (Continued)

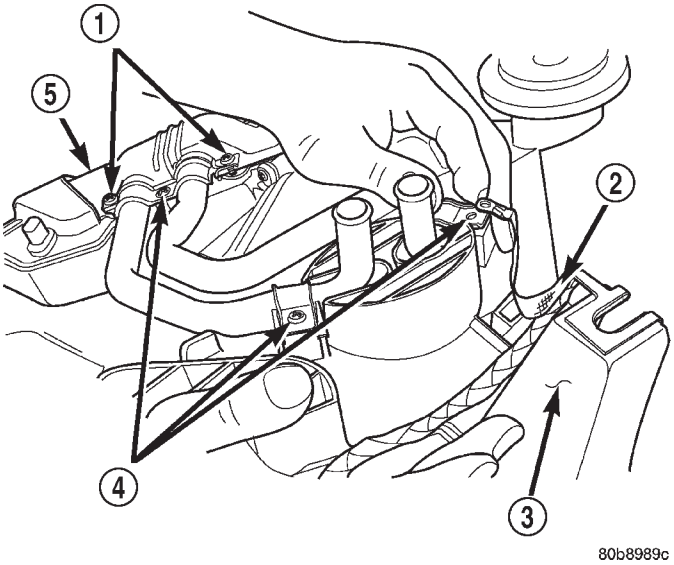

Fig. 10 HEATER CORE, TUBES, AND RETAINERS

1 - TUBE-TO-CORE CLAMPS
2 - GROUND STRAP
3 - HVAC HOUSING
4 - TUBE RETAINERS AND SCREWS
5 - HEATER CORE

(6) When replacing individual tubes, loosen and remove the round tube-to-core clamp, and pull tube from core.

INSTALLATION

WARNING: REVIEW THE WARNINGS AND CAUTIONS IN THE FRONT OF THIS SECTION BEFORE PERFORMING THE FOLLOWING OPERATION. (Refer to 24 - HEATING & AIR CONDITIONING/ PLUMBING - WARNING) (Refer to 24 - HEATING & AIR CONDITIONING/PLUMBING - CAUTION)

Any kinks or sharp bends in the refrigerant plumbing will reduce the capacity of the entire air conditioning system. Kinks and sharp bends reduce the flow of refrigerant in the system. A good rule for the flexible hose refrigerant lines is to keep the radius of all bends at least ten times the diameter of the hose. In addition, the flexible hose refrigerant lines should be routed so they are at least 80 millimeters (3 inches) from the exhaust manifold.

High pressures are produced in the refrigerant system when the air conditioning compressor is operating. Extreme care must be exercised to make sure that each of the refrigerant system connections is

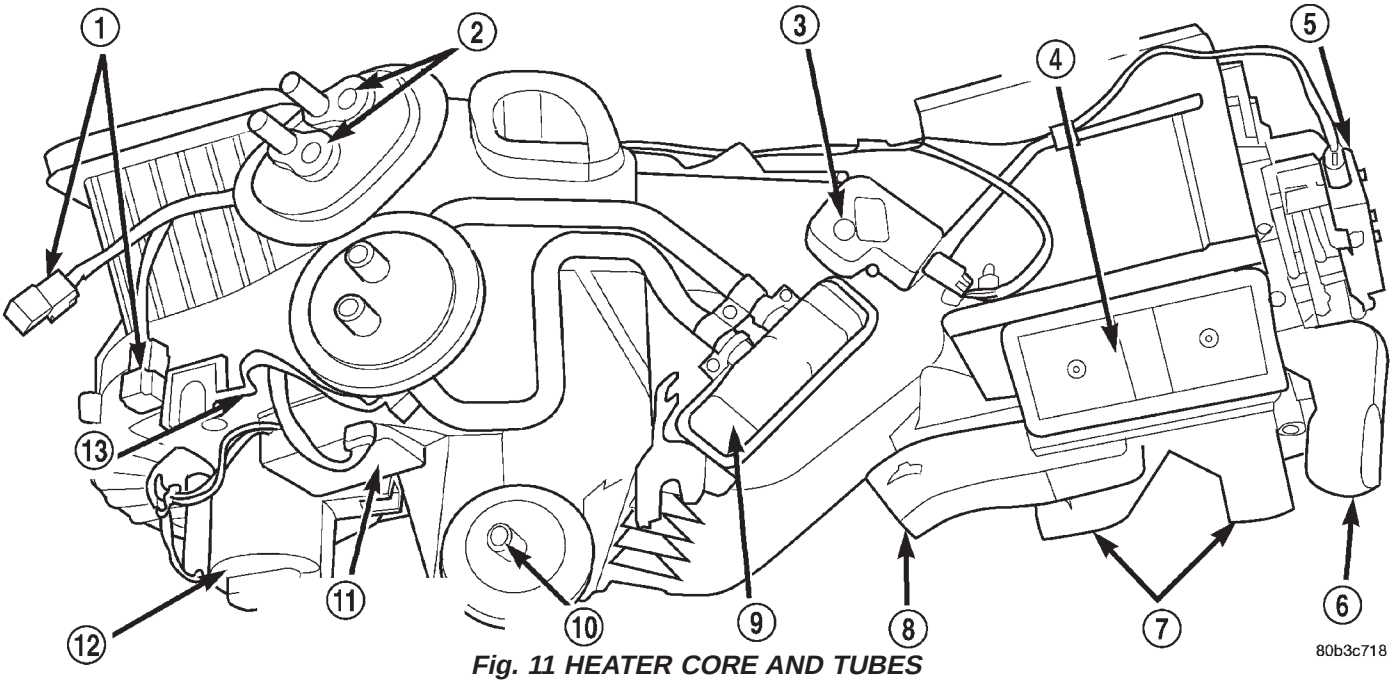

Fig. 11 HEATER CORE AND TUBES

1 - ELECTRICAL CONNECTORS
2 - EVAPORATOR FITTINGS (CAPPED)
3 - ELECTRIC ACTUATOR
4 - OUTLET TO DEFROSTER DUCTS
5 - ELECTRIC ACTUATOR
6 - FLOOR DUCT
7 - TO REAR PASSENGER FLOOR AIR DUCTS
8 - FLOOR DUCT
9 - HEATER CORE AND TUBES
10 - HOUSING DRAIN
11 - BLOWER MOTOR RESISTOR/CONTROLLER
12 - BLOWER MOTOR
13 - GROUND STRAP

HEATER CORE (Continued)

pressure-tight and leak free. It is a good practice to inspect all flexible hose refrigerant lines at least once a year to make sure they are in good condition and properly routed.

(1) When installing individual tubes, insert tube into core ensuring that tube O-ring is seated in core and not pinched. Hold tube in seated position while installing the round tube-to-core clamp (Fig. 12).

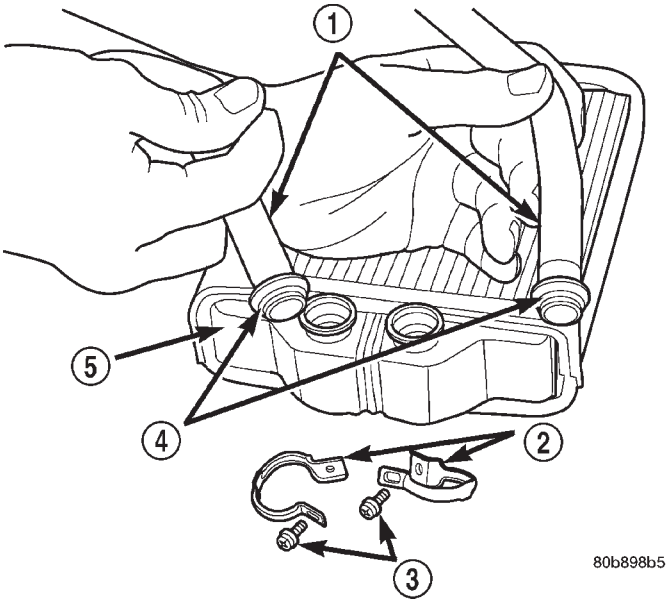

Fig. 12 HEATER CORE, TUBES, AND O-RINGS

1 - HEATER CORE TUBES
2 - TUBE-TO-CORE CLAMPS
3 - SCREWS
4 - O-RINGS
5 - HEATER CORE

NOTE: The round tube-to-heater-core clamp should be left loose enough to turn the tube in the core. Position the core in the housing, and then tighten the tube-to-heater-core clamp after orienting the tubes to the molded HVAC housing.

(2) Lower the heater core into the HVAC housing.

(3) Install the mode door actuator, if removed from housing for core removal.

(4) Position the retainers over the heater core tubes. Install and tighten the screws that secure the heater core and retainers to the HVAC housing. Tighten the screws to 2.2 N·m (20 in. lbs.).

NOTE: The grounding strap is to be attached to the lower heater core tube retainer.

(5) Reinstall the HVAC housing to the vehicle. (Refer to 24 - HEATING & AIR CONDITIONING/ DISTRIBUTION/HVAC HOUSING - INSTALLATION)

REFRIGERANT

DESCRIPTION

The refrigerant used in this air conditioning system is a HydroFluoroCarbon (HFC), type R-134a. Unlike R-12, which is a ChloroFluoroCarbon (CFC), R-134a refrigerant does not contain ozone-depleting chlorine. R-134a refrigerant is a non-toxic, non-flammable, clear, and colorless liquefied gas.

Even though R-134a does not contain chlorine, it must be reclaimed and recycled just like CFC-type refrigerants. This is because R-134a is a greenhouse gas and can contribute to global warming.

OPERATION

R-134a refrigerant is not compatible with R-12 refrigerant in an air conditioning system. Even a small amount of R-12 added to an R-134a refrigerant system will cause compressor failure, refrigerant oil sludge or poor air conditioning system performance. In addition, the PolyAlkylene Glycol (PAG) synthetic refrigerant oils used in an R-134a refrigerant system are not compatible with the mineral-based refrigerant oils used in an R-12 refrigerant system.

R-134a refrigerant system service ports, service tool couplers and refrigerant dispensing bottles have all been designed with unique fittings to ensure that an R-134a system is not accidentally contaminated with the wrong refrigerant (R-12). There are also labels posted in the engine compartment of the vehicle and on the compressor identifying to service technicians that the air conditioning system is equipped with R-134a.

REFRIGERANT OIL

DESCRIPTION

The refrigerant oil used in R-134a refrigerant systems is a synthetic-based, PolyAlkylene Glycol (PAG), wax-free lubricant. Mineral-based R-12 refrigerant oils are not compatible with PAG oils, and should never be introduced to an R-134a refrigerant system.

There are different PAG oils available, and each contains a different additive package. The 10PA17 compressor used in this vehicle is designed to use an ND8 PAG refrigerant oil. Use only refrigerant oil of this same type to service the refrigerant system.

OPERATION

After performing any refrigerant recovery or recycling operation, always replenish the refrigerant system with the same amount of the recommended refrigerant oil as was removed. Too little refrigerant oil can cause compressor damage, and too much can reduce air conditioning system performance.

REFRIGERANT OIL (Continued)

PAG refrigerant oil is much more hygroscopic than mineral oil, and will absorb any moisture it comes into contact with, even moisture in the air. The PAG oil container should always be kept tightly capped until it is ready to be used. After use, recap the oil container immediately to prevent moisture contamination.

STANDARD PROCEDURE - REFRIGERANT OIL LEVEL

When an air conditioning system is assembled at the factory, all components except the compressor are refrigerant oil free. After the refrigerant system has been charged and operated, the refrigerant oil in the compressor is dispersed throughout the refrigerant system. The accumulator, evaporator, condenser, and compressor will each retain a significant amount of the needed refrigerant oil.

It is important to have the correct amount of oil in the refrigerant system. This ensures proper lubrication of the compressor. Too little oil will result in damage to the compressor. Too much oil will reduce the cooling capacity of the air conditioning system.

It will not be necessary to check the oil level in the compressor or to add oil, unless there has been an oil loss. An oil loss may occur due to a rupture or leak from a refrigerant line, a connector fitting, a component, or a component seal. If a leak occurs, add 30 milliliters (1 fluid ounce) of refrigerant oil to the refrigerant system after the repair has been made. Refrigerant oil loss will be evident at the leak point by the presence of a wet, shiny surface around the leak.

Refrigerant oil must be added when a accumulator, evaporator coil, or condenser are replaced. See the Refrigerant Oil Capacities chart. When a compressor is replaced, the refrigerant oil must be drained from the old compressor and measured. Drain all of the refrigerant oil from the new compressor, then fill the new compressor with the same amount of refrigerant oil that was drained out of the old compressor.

Refrigerant Oil Capacities		
Component	ml	fl oz
A/C System	170	5.75
Accumulator	110.6	3.75
Condenser	6.5	0.22
Evaporator	62.7	2.12
Compressor	drain and measure the oil from the old compressor - see text.	

EMISSIONS CONTROL

TABLE OF CONTENTS

page

EMISSIONS CONTROL
DESCRIPTION 1
EMISSION SYSTEM 1
STATE DISPLAY TEST MODE 1
DIAGNOSTIC TROUBLE CODES 2
MONITORED SYSTEMS 16
COMPONENT MONITORS 18
HIGH AND LOW LIMITS 19
OPERATION 19
TASK MANAGER 19
EVAPORATIVE EMISSIONS 23

EMISSIONS CONTROL

DESCRIPTION - EMISSION CONTROL SYSTEM

The Powertrain Control Module (PCM) monitors many different circuits in the fuel injection, ignition, emission and engine systems. If the PCM senses a problem with a monitored circuit often enough to indicate an actual problem, it stores a Diagnostic Trouble Code (DTC) in the PCM's memory. If the code applies to a non-emissions related component or system, and the problem is repaired or ceases to exist, the PCM cancels the code after 40 warm-up cycles. Diagnostic trouble codes that affect vehicle emissions illuminate the Malfunction Indicator (check engine) Lamp. Refer to Malfunction Indicator Lamp in this section.

Certain criteria must be met before the PCM stores a DTC in memory. The criteria may be a specific range of engine RPM, engine temperature, and/or input voltage to the PCM.

The PCM might not store a DTC for a monitored circuit even though a malfunction has occurred. This may happen because one of the DTC criteria for the circuit has not been met. **For example**, assume the diagnostic trouble code criteria requires the PCM to monitor the circuit only when the engine operates between 750 and 2000 RPM. Suppose the sensor's output circuit shorts to ground when engine operates above 2400 RPM (resulting in 0 volt input to the PCM). Because the condition happens at an engine speed above the maximum threshold (2000 rpm), the PCM will not store a DTC.

There are several operating conditions for which the PCM monitors and sets DTC's. Refer to Monitored Systems, Components, and Non-Monitored Circuits in this section.

Technicians must retrieve stored DTC's by connecting the DRB scan tool (or an equivalent scan tool) to the 16–way data link connector (Fig. 1).

NOTE: Various diagnostic procedures may actually cause a diagnostic monitor to set a DTC. For instance, pulling a spark plug wire to perform a spark test may set the misfire code. When a repair is completed and verified, connect the DRB scan tool to the 16–way data link connector to erase all DTC's and extinguish the MIL (check engine lamp).

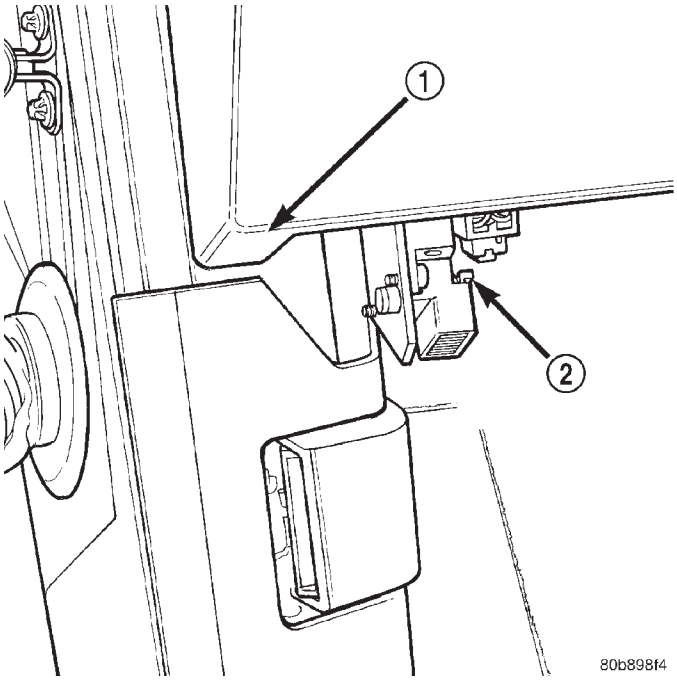

Fig. 1 Data Link (Diagnostic) Connector Location

1 - INSTRUMENT PANEL LOWER/LEFT EDGE
2 - DATA LINK CONNECTOR

DESCRIPTION - STATE DISPLAY TEST MODE

The switch inputs to the Powertrain Control Module (PCM) have two recognized states; HIGH and LOW. For this reason, the PCM cannot recognize the difference between a selected switch position versus an open circuit, a short circuit, or a defective switch. If the State Display screen shows the change from

EMISSIONS CONTROL (Continued)

HIGH to LOW or LOW to HIGH, assume the entire switch circuit to the PCM functions properly. Connect the DRB scan tool to the data link connector and access the state display screen. Then access either State Display Inputs and Outputs or State Display Sensors.

OPERATION - CIRCUIT ACTUATION TEST MODE

The Circuit Actuation Test Mode checks for proper operation of output circuits or devices the Powertrain Control Module (PCM) may not internally recognize. The PCM attempts to activate these outputs and allow an observer to verify proper operation. Most of the tests provide an audible or visual indication of device operation (click of relay contacts, fuel spray, etc.). Except for intermittent conditions, if a device functions properly during testing, assume the device, its associated wiring, and driver circuit work correctly. Connect the DRB scan tool to the data link connector and access the Actuators screen.

DESCRIPTION - DIAGNOSTIC TROUBLE CODES

A Diagnostic Trouble Code (DTC) indicates the PCM has recognized an abnormal condition in the system.

Remember that DTC's are the results of a system or circuit failure, but do not directly identify the failed component or components.

NOTE: For a list of DTC's, refer to the charts in this section.

BULB CHECK

Each time the ignition key is turned to the ON position, the malfunction indicator (check engine) lamp on the instrument panel should illuminate for approximately 2 seconds then go out. This is done for a bulb check.

OBTAINING DTC'S USING DRB SCAN TOOL

(1) Connect the DRB scan tool to the data link (diagnostic) connector. This connector is located in the passenger compartment; at the lower edge of instrument panel; near the steering column.

(2) Turn the ignition switch on and access the "Read Fault" screen.

(3) Record all the DTC's and "freeze frame" information shown on the DRB scan tool.

(4) To erase DTC's, use the "Erase Trouble Code" data screen on the DRB scan tool. **Do not erase any DTC's until problems have been investigated and repairs have been performed.**

(M) Malfunction Indicator Lamp (MIL) illuminated during engine operation if this DTC was recorded (depending if required by CARB and/or EPA). MIL is displayed as an engine icon on instrument panel.		
(G) Generator lamp illuminated		
Generic Scan Tool P-Code	DRB Scan Tool Display	Brief Description of DTC
P0030 (M)	1/1 O2 Sensor Heater Relay Circuit	Problem detected in oxygen sensor heater relay circuit.
P0036 (M)	1/2 O2 Sensor Heater Relay Circuit	Problem detected in oxygen sensor heater relay circuit.
P0106	Barometric Pressure Out of Range	MAP sensor input voltage out of an acceptable range detected during reading of barometric pressure at key-on.
P0107 (M)	Map Sensor Voltage Too Low	MAP sensor input below minimum acceptable voltage.
P0108 (M)	Map Sensor Voltage Too High	MAP sensor input above maximum acceptable voltage.
P0112 (M)	Intake Air Temp Sensor Voltage Low	Intake air (charge) temperature sensor input below the minimum acceptable voltage.
P0113 (M)	Intake Air Temp Sensor Voltage High	Intake air (charge) temperature sensor input above the maximum acceptable voltage.
P0116		A rationatilty error has been detected in the coolant temp sensor.
P0117 (M)	ECT Sensor Voltage Too Low	Engine coolant temperature sensor input below the minimum acceptable voltage.
P0118 (M)	ECT Sensor Voltage Too High	Engine coolant temperature sensor input above the maximum acceptable voltage.

EMISSIONS CONTROL (Continued)

(M) Malfunction Indicator Lamp (MIL) illuminated during engine operation if this DTC was recorded (depending if required by CARB and/or EPA). MIL is displayed as an engine icon on instrument panel.		
(G) Generator lamp illuminated		
Generic Scan Tool P-Code	DRB Scan Tool Display	Brief Description of DTC
P0121 (M)	TPS Voltage Does Not Agree With MAP	TPS signal does not correlate to MAP sensor signal.
P0121 (M)	Accelerator Position Sensor (APPS) Signal Voltage Too Low	APPS voltage input below the minimum acceptable voltage.
P0122 (M)	Throttle Position Sensor Voltage Low	Throttle position sensor input below the acceptable voltage range.
P0122 (M)	Accelerator Position Sensor (APPS) Signal Voltage Too Low	APPS voltage input below the minimum acceptable voltage.
P0123 (M)	Throttle Position Sensor Voltage High	Throttle position sensor input above the maximum acceptable voltage.
P0123 (M)	Accelerator Position Sensor (APPS) Signal Voltage Too High	APPS voltage input above the maximum acceptable voltage.
P0125 (M)	Closed Loop Temp Not Reached	Time to enter Closed Loop Operation (Fuel Control) is excessive.
P0125 (M)	Engine is Cold Too Long	Engine does not reach operating temperature.
P0130 (M)	1/1 O2 Sensor Heater Circuit Malfunction	Oxygen sensor heater element malfunction.
P0131 (M)	1/1 O2 Sensor Shorted To Ground	Oxygen sensor input voltage maintained below normal operating range.
P0132 (M)	1/1 O2 Sensor Shorted To Voltage	Oxygen sensor input voltage maintained above normal operating range.
P0133 (M)	1/1 O2 Sensor Slow Response	Oxygen sensor response slower than minimum required switching frequency.
P0134 (M)	1/1 O2 Sensor Stays at Center	Neither rich or lean condition is detected from the oxygen sensor input.
P0135 (M)	1/1 O2 Sensor Heater Failure	Oxygen sensor heater element malfunction.
P0136 (M)	1/2 O2 Sensor Heater Circuit Malfunction	Oxygen sensor heater element malfunction.
P0137 (M)	1/2 O2 Sensor Shorted To Ground	Oxygen sensor input voltage maintained below normal operating range.
P0138 (M)	1/2 O2 Sensor Shorted To Voltage	Oxygen sensor input voltage maintained above normal operating range.
P0139 (M)	1/2 O2 Sensor Slow Response	Oxygen sensor response not as expected.
P0140 (M)	1/2 O2 Sensor Stays at Center	Neither rich or lean condition is detected from the oxygen sensor.
P0141 (M)	1/2 O2 Sensor Heater Failure	Oxygen sensor heater element malfunction.
P0143 (M)	1/3 O2 Sensor Shorted To Ground	Oxygen sensor input voltage maintained below normal operating range.
P0144 (M)	1/3 O2 Sensor Shorted To Voltage	Oxygen sensor input voltage maintained above normal operating range.
P0145 (M)	1/3 O2 Sensor Slow Response	Oxygen sensor response slower than minimum required switching frequency.

EMISSIONS CONTROL (Continued)

(M) Malfunction Indicator Lamp (MIL) illuminated during engine operation if this DTC was recorded (depending if required by CARB and/or EPA). MIL is displayed as an engine icon on instrument panel.		
(G) Generator lamp illuminated		
Generic Scan Tool P-Code	DRB Scan Tool Display	Brief Description of DTC
P0146 (M)	1/3 O2 Sensor Stays at Center	Neither rich or lean condition is detected from the oxygen sensor.
P0147 (M)	1/3 O2 Sensor Heater Failure	Oxygen sensor heater element malfunction.
P0151 (M)	2/1 O2 Sensor Shorted To Ground	Oxygen sensor input voltage maintained below normal operating range.
P0152 (M)	2/1 O2 Sensor Shorted To Voltage	Oxygen sensor input voltage sustained above normal operating range.
P0153 (M)	2/1 O2 Sensor Slow Response	Oxygen sensor response slower than minimum required switching frequency.
P0154 (M)	2/1 O2 Sensor Stays at Center	Neither rich or lean condition is detected from the oxygen sensor.
P0155 (M)	2/1 O2 Sensor Heater Failure	Oxygen sensor heater element malfunction.
P0157 (M)	2/2 O2 Sensor Shorted To Ground	Oxygen sensor input voltage maintained below normal operating range.
P0158 (M)	2/2 O2 Sensor Shorted To Voltage	Oxygen sensor input voltage maintained above normal operating range.
P0159	2/2 O2 Sensor Slow Response	Oxygen sensor response slower than minimum required switching frequency.
P0160 (M)	2/2 O2 Sensor Stays at Center	Neither rich or lean condition is detected from the oxygen sensor.
P0161 (M)	2/2 O2 Sensor Heater Failure	Oxygen sensor heater element malfunction.
P0168	Decreased Engine Performance Due To High Injection Pump Fuel Temp	Fuel temperature is above the engine protection limit. Engine power will be derated.
P0171 (M)	1/1 Fuel System Lean	A lean air/fuel mixture has been indicated by an abnormally rich correction factor.
P0172 (M)	1/1 Fuel System Rich	A rich air/fuel mixture has been indicated by an abnormally lean correction factor.
P0174 (M)	2/1 Fuel System Lean	A lean air/fuel mixture has been indicated by an abnormally rich correction factor.
P0175 (M)	2/1 Fuel System Rich	A rich air/fuel mixture has been indicated by an abnormally lean correction factor.
P0176	Loss of Flex Fuel Calibration Signal	No calibration voltage present from flex fuel sensor.
P0177	Water In Fuel	Excess water found in fuel by water-in-fuel sensor.
P0178	Flex Fuel Sensor Volts Too Low	Flex fuel sensor input below minimum acceptable voltage.
P0178	Water In Fuel Sensor Voltage Too Low	Loss of water-in-fuel circuit or sensor.
P0179	Flex Fuel Sensor Volts Too High	Flex fuel sensor input above maximum acceptable voltage.
P0181	Fuel Injection Pump Failure	Low power, engine derated, or engine stops.
P0182 (M)	CNG Temp Sensor Voltage Too Low	Compressed natural gas temperature sensor voltage below acceptable voltage.
P0183 (M)	CNG Temp Sensor Voltage Too High	Compressed natural gas temperature sensor voltage above acceptable voltage.

EMISSIONS CONTROL (Continued)

(M) Malfunction Indicator Lamp (MIL) illuminated during engine operation if this DTC was recorded (depending if required by CARB and/or EPA). MIL is displayed as an engine icon on instrument panel.		
(G) Generator lamp illuminated		
Generic Scan Tool P-Code	DRB Scan Tool Display	Brief Description of DTC
P0201 (M)	Injector #1 Control Circuit	An open or shorted condition detected in control circuit for injector #1 or the INJ 1 injector bank.
P0202 (M)	Injector #2 Control Circuit	An open or shorted condition detected in control circuit for injector #2 or the INJ 2 injector bank.
P0203 (M)	Injector #3 Control Circuit	An open or shorted condition detected in control circuit for injector #3 or the INJ 3 injector bank.
P0204 (M)	Injector #4 Control Circuit	Injector #4 or INJ 4 injector bank output driver stage does not respond properly to the control signal.
P0205 (M)	Injector #5 Control Circuit	Injector #5 output driver stage does not respond properly to the control signal.
P0206 (M)	Injector #6 Control Circuit	Injector #6 output driver stage does not respond properly to the control signal.
P0207 (M)	Injector #7 Control Circuit	Injector #7 output driver stage does not respond properly to the control signal.
P0208 (M)	Injector #8 Control Circuit	Injector #8 output driver stage does not respond properly to the control signal.
P0209 (M)	Injector #9 Control Circuit	Injector #9 output driver stage does not respond properly to the control signal.
P0210 (M)	Injector #10 Control Circuit	Injector #10 output driver stage does not respond properly to the control signal.
P0215	Fuel Injection Pump Control Circuit	Failure in fuel pump relay control circuit.
P0216 (M)	Fuel Injection Pump Timing Failure	High fuel supply restriction, low fuel pressure or possible wrong or incorrectly installed pump keyway.
P0217	Decreased Engine Performance Due To Engine Overheat Condition	Engine overheating. ECM will derate engine performance.
P0219	Crankshaft Position Sensor Overspeed Signal	Engine has exceeded rpm limits.
P0222 (M)	Idle Validation Signals Both Low	Problem detected with idle validation circuits within APPS.
P0223 (M)	Idle Validation Signals Both High (Above 5 Volts)	Problem detected with idle validation circuits within APPS.
P0230	Transfer Pump (Lift Pump) Circuit Out of Range	Problem detected in fuel transfer pump circuits.
P0232	Fuel Shutoff Signal Voltage Too High	Fuel shut-off signal voltage too high from ECM to fuel injection pump.
P0234 (M)	Turbo Boost Limit Exceeded	Problem detected in turbocharger wastegate.
P0236 (M)	Map Sensor Too High Too Long	Problem detected in turbocharger wastegate.
P0237 (M)	Map Sensor Voltage Too Low	MAP sensor voltage input below the minimum acceptable voltage.
P0238 (M)	Map Sensor Voltage Too High	MAP sensor voltage input above the maximum acceptable voltage.
P0251 (M)	Fuel Inj. Pump Mech. Failure Fuel Valve Feedback Circuit	Problem sensed with fuel circuit internal to fuel injection pump.

EMISSIONS CONTROL (Continued)

(M) Malfunction Indicator Lamp (MIL) illuminated during engine operation if this DTC was recorded (depending if required by CARB and/or EPA). MIL is displayed as an engine icon on instrument panel.		
(G) Generator lamp illuminated		
Generic Scan Tool P-Code	DRB Scan Tool Display	Brief Description of DTC
P0253 (M)	Fuel Injection Pump Fuel Valve Open Circuit	Problem sensed with fuel circuit internal to fuel injection pump.
P0254	Fuel Injection Pump Fuel Valve Current Too High	Problem caused by internal fuel injection pump failure.
P0300 (M)	Multiple Cylinder Mis-fire	Misfire detected in multiple cylinders.
P0301 (M)	CYLINDER #1 MISFIRE	Misfire detected in cylinder #1.
P0302 (M)	CYLINDER #2 MISFIRE	Misfire detected in cylinder #2.
P0303 (M)	CYLINDER #3 MISFIRE	Misfire detected in cylinder #3.
P0304 (M)	CYLINDER #4 MISFIRE	Misfire detected in cylinder #4.
P0305 (M)	CYLINDER #5 MISFIRE	Misfire detected in cylinder #5.
P0306 (M)	CYLINDER #6 MISFIRE	Misfire detected in cylinder #6.
P0307 (M)	CYLINDER #7 MISFIRE	Misfire detected in cylinder #7
P0308 (M)	CYLINDER #8 MISFIRE	Misfire detected in cylinder #8.
P0309 (M)	CYLINDER #9 MISFIRE	Misfire detected in cylinder #9.
P0310 (M)	CYLINDER #10 MISFIRE	Misfire detected in cylinder #10.
P0320 (M)	No Crank Referance Signal at PCM	No reference signal (crankshaft position sensor) detected during engine cranking.
P0320 (M)	No RPM Signal to PCM (Crankshaft Position Sensor Signal to JTEC)	A CKP signal has not been detected at the PCM.
P0325	Knock Sensor #1 Circuit	Knock sensor (#1) signal above or below minimum acceptable threshold voltage at particular engine speeds.
P0330	Knock Sensor #2 Circuit	Knock sensor (#2) signal above or below minimum acceptable threshold voltage at particular engine speeds.
P0336 (M)	Crankshaft Position (CKP) Sensor Signal	Problem with voltage signal from CKP.
P0340 (M)	No Cam Signal At PCM	No fuel sync
P0341 (M)	Camshaft Position (CMP) Sensor Signal	Problem with voltage signal from CMP.
P0350	Ignition Coil Draws Too Much Current	A coil (1-5) is drawing too much current.
P0351 (M)	Ignition Coil # 1 Primary Circuit	Peak primary circuit current not achieved with maximum dwell time.
P0352 (M)	Ignition Coil # 2 Primary Circuit	Peak primary circuit current not achieved with maximum dwell time.
P0353 (M)	Ignition Coil # 3 Primary Circuit	Peak primary circuit current not achieved with maximum dwell time.
P0354 (M)	Ignition Coil # 4 Primary Circuit	Peak primary circuit current not achieved with maximum dwell time (High Impedance).
P0355 (M)	Ignition Coil # 5 Primary Circuit	Peak primary circuit current not achieved with maximum dwell time (High Impedance).
P0356 (M)	Ignition Coil # 6 Primary Circuit	Peak primary circuit current not achieved with maximum dwell time (high impedance).

EMISSIONS CONTROL (Continued)

(M) Malfunction Indicator Lamp (MIL) illuminated during engine operation if this DTC was recorded (depending if required by CARB and/or EPA). MIL is displayed as an engine icon on instrument panel.		
(G) Generator lamp illuminated		
Generic Scan Tool P-Code	DRB Scan Tool Display	Brief Description of DTC
P0357 (M)	Ignition Coil # 7 Primary Circuit	Peak primary circuit current not achieved with maximum dwell time (high impedance).
P0358 (M)	Ignition Coil # 8 Primary Circuit	Peak primary circuit current not achieved with maximum dwell time (high impedance).
P0370	Fuel Injection Pump Speed/Position Sensor Sig Lost	Problem caused by internal fuel injection pump failure.
P0380 (M)	Intake Air Heater Relay #1 Control Circuit	Problem detected in #1 air heater solenoid/relay circuit (not heater element)
P0381 (M)	Wait To Start Lamp Inoperative	Problem detected in wait-to-start bulb circuit.
P0382 (M)	Intake Air Heater Relay #2 Control Circuit	Problem detected in #2 air heater solenoid/relay circuit (not heater element)
P0387	Crankshaft Position Sensor Supply Voltage Too Low	CKP sensor voltage input below the minimum acceptable voltage.
P0388	Crankshaft Position Sensor Supply Voltage Too High	CKP sensor voltage input above the maximum acceptable voltage.
P0401	EGR System Failure	Required change in air/fuel ration not detected during diagnostic test.
P0403	EGR Solenoid Circuit	An open or shorted condition detected in the EGR solenoid control circuit.
P0404	EGR Position Sensor Rationality	EGR position sensor signal does not correlate to EGR duty cycle.
P0405	EGR Position Sensor Volts Too Low	EGR position sensor input below the acceptable voltage range.
P0406	EGR Position Sensor Volts Too High	EGR position sensor input above the acceptable voltage range.
P0412	Secondary Air Solenoid Circuit	An open or shorted condition detected in the secondary air (air switching/aspirator) solenoid control circuit.
P0420 (M)	1/1 Catalytic Converter Efficiency	Catalyst 1/1 efficiency below required level.
P0432 (M)	1/2 Catalytic Converter Efficiency	Catalyst 2/1 efficiency below required level.
P0441 (M)	Evap Purge Flow Monitor	Insufficient or excessive vapor flow detected during evaporative emission system operation.
P0442 (M)	Evap Leak Monitor Medium Leak Detected	A small leak has been detected in the evaporative system.
P0443 (M)	Evap Purge Solenoid Circuit	An open or shorted condition detected in the EVAP purge solenoid control circuit.
P0455 (M)	Evap Leak Monitor Large Leak Detected	A large leak has been detected in the evaporative system.
P0456 (M)	Evap Leak Monitor Small Leak Detected	Leak has been detected in the evaporative system.
P0460	Fuel Level Unit No Change Over Miles	During low fuel
P0460	Fuel Level Unit No Change Over Miles	Fuel level sending unit voltage does not change for more than 40 miles.

EMISSIONS CONTROL (Continued)

(M) Malfunction Indicator Lamp (MIL) illuminated during engine operation if this DTC was recorded (depending if required by CARB and/or EPA). MIL is displayed as an engine icon on instrument panel.		
(G) Generator lamp illuminated		
Generic Scan Tool P-Code	DRB Scan Tool Display	Brief Description of DTC
P0462	Fuel Level Sending Unit Volts Too Low	Fuel level sensor input below acceptable voltage.
P0462 (M)	Fuel Level Sending Unit Volts Too Low	Open circuit between PCM and fuel gauge sending unit.
P0463	Fuel Level Sending Unit Volts Too High	Fuel level sensor input above acceptable voltage.
P0463 (M)	Fuel Level Sending Unit Volts Too High	Circuit shorted to voltage between PCM and fuel gauge sending unit.
P0500 (M)	No Vehicle Speed Sensor Signal	No vehicle speed sensor signal detected during road load conditions.
P0500 (M)	No Vehicle Speed Sensor Signal	A vehicle speed signal was not detected.
P0505 (M)	Idle Air Control Motor Circuits	SBEC II
P0522	Oil Pressure Voltage Too Low	Oil pressure sending unit (sensor) voltage input below the minimum acceptable voltage.
P0523	Oil Pressure Voltage Too High	Oil pressure sending unit (sensor) voltage input above the maximum acceptable voltage.
P0524	Oil Pressure Too Low	Engine oil pressure is low. Engine power derated.
P0545	A/C Clutch Relay Circuit	Problem detected in air conditioning clutch relay control circuit.
P0551	Power Steering Switch Failure	Incorrect input state detected for the power steering switch circuit. PL: High pressure seen at high speed.
P0562	Charging System Voltage Too Low	Supply voltage sensed at ECM too low.
P0563	Charging System Voltage Too High	Supply voltage sensed at ECM too high.
P0600	PCM Failure SPI Communications	No communication detected between co-processors in the control module.
P0601 (M)	Internal Controller Failure	Internal control module fault condition (check sum) detected.
P0602 (M)	ECM Fueling Calibration Error	ECM Internal fault condition detected.
P0604	RAM Check Failure	Transmission control module RAM self test fault detected. -Aisin transmission
P0605	ROM Check Falure	Transmission control module ROM self test fault detected -Aisin transmission
P0606 (M)	ECM Failure	ECM Internal fault condition detected.
P0615	Starter Relay Control Circuit	An open or shorted condition detected in the starter relay control circuit.
P0622 (G)	Generator Field Not Switching Properly	An open or shorted condition detected in the generator field control circuit.
P0645	A/C Clutch Relay Circuit	An open or shorted condition detected in the A/C clutch relay control circuit.

EMISSIONS CONTROL (Continued)

(M) Malfunction Indicator Lamp (MIL) illuminated during engine operation if this DTC was recorded (depending if required by CARB and/or EPA). MIL is displayed as an engine icon on instrument panel.		
(G) Generator lamp illuminated		
Generic Scan Tool P-Code	DRB Scan Tool Display	Brief Description of DTC
P0700	EATX Controller DTC Present	This SBEC III or JTEC DTC indicates that the EATX or Aisin controller has an active fault and has illuminated the MIL via a CCD (EATX) or SCI (Aisin) message. The specific fault must be acquired from the EATX via CCD or from the Aisin via ISO-9141.
P0703	Brake Switch Stuck Pressed or Released	Incorrect input state detected in the brake switch circuit. (Changed from P1595)
P0711 (M)	Trans Temp Sensor, No Temp Rise After Start	Relationship between the transmission temperature and overdrive operation and/or TCC operation indicates a failure of the Transmission Temperature Sensor. OBD II Rationality. Was MIL code 37.
P0712	Trans Temp Sensor Voltage Too Low	Transmission fluid temperature sensor input below acceptable voltage. Was MIL code 37.
P0712 (M)	Trans Temp Sensor Voltage Too Low	Voltage less than 1.55 volts (4-speed auto. trans. only).
P0713	Trans Temp Sensor Voltage Too High	Transmission fluid temperature sensor input above acceptable voltage. Was MIL code 37.
P0713 (M)	Trans Temp Sensor Voltage Too High	Voltage greater than 3.76 volts (4-speed auto. trans. only).
P0720 (M)	Low Output SPD Sensor RPM, Above 15 MPH	The relationship between the Output Shaft Speed Sensor and vehicle speed is not within acceptable limits.
P0720 (M)	Low Output Spd Sensor RPM Above 15 mph	Output shaft speed is less than 60 rpm with vehicle speed above 15 mph (4-speed auto. trans. only).
P0740 (M)	Torq Con Clu, No RPM Drop at Lockup	Relationship between engine and vehicle speeds indicated failure of torque convertor clutch lock-up system (TCC/PTU solenoid)
P0743 (M)	Torque Converter Clutch Solenoid/ Trans Relay Circuits	An open or shorted condition detected in the torque converter clutch (part throttle unlock) solenoid control circuit. Shift solenoid C electrical fault - Aisin transmission
P0743 (M)	Torque Converter Clutch Solenoid/ Trans Relay Circuits	An open or shorted condition detected in the torque converter part throttle unlock solenoid control circuit (3 or 4-speed auto. trans. only).
P0748 (M)	Governor Pressur Sol Control/Trans Relay Circuits	An open or shorted condition detected in the Governor Pressure Solenoid circuit or Trans Relay Circuit in JTEC RE transmissions.
P0748 (M)	Governor Pressure Sol Control/Trans Relay Circuits	An open or shorted condition detected in the governor pressure solenoid or relay circuits (4-speed auto. trans. only).
P0751 (M)	O/D Switch Pressed (Lo) More Than 5 Minutes	Overdrive override switch input is in a prolonged depressed state.
P0751 (M)	O/D Switch Pressed (LO) More Than 5 Min	Overdrive Off switch input too low for more than 5 minutes (4-speed auto. trans. only).
P0753 (M)	Trans 3-4 Shift Sol/Trans Relay Circuits	An open or shorted condition detected in the overdrive solenoid control circuit or Trans Relay Circuit in JTEC RE transmissions. Was MIL code 45.

EMISSIONS CONTROL (Continued)

(M) Malfunction Indicator Lamp (MIL) illuminated during engine operation if this DTC was recorded (depending if required by CARB and/or EPA). MIL is displayed as an engine icon on instrument panel.		
(G) Generator lamp illuminated		
Generic Scan Tool P-Code	DRB Scan Tool Display	Brief Description of DTC
P0753 (M)	Trans 3-4 Shift Sol/Trans Relay Circuits	An open or shorted condition detected in the transmission 2-4 shift solenoid circuit (4-speed auto. trans. only).
P0756	AW4 Shift Sol B (2-3) Functional Failure	Shift solenoid B (2-3) functional fault - Aisin transmission
P0783 (M)	3-4 Shift Sol, No RPM Drop at Lockup	The overdrive solenoid is unable to engage the gear change from 3rd gear to the overdrive gear.
P0801	Reverse Gear Lockout Circuit Open or Short	An open or shorted condition detected in the transmission reverse gear lock-out solenoid control circuit.
P0830	Clutch Depressed Switch Circuit	Problem detected in clutch switch circuit.
P0833	Clutch Released Switch Circuit	Problem detected in clutch switch circuit.
P1110	Decrease Engine Performance Due To High Intake Air Temperature	Intake manifold air temperature is above the engine protection limit. Engine power will be derated.
P1180	Decreased Engine Performance Due To High Injection Pump Fuel Temp	Fuel temperature is above the engine protection limit. Engine power will be derated.
P1195 (M)	1/1 O2 Sensor Slow During Catalyst Monitor	A slow switching oxygen sensor has been detected in bank 1/1 during catalyst monitor test. (Also see SCI DTC $66) (was P0133)
P1196 (M)	2/1 O2 Sensor Slow During Catalyst Monitor	A slow switching oxygen sensor has been detected in bank 2/1 during catalyst monitor test. (Also see SCI DTC $7A) (was P0153)
P1197	1/2 O2 Sensor Slow During Catalyst Monitor	A slow switching oxygen sensor has been detected in bank 1/2 during catalyst monitor test. (Also see SCI DTC $68) (was P0139)
P1198	Radiator Temperature Sensor Volts Too High	Radiator coolant temperature sensor input above the maximum acceptable voltage.
P1199	Radiator Temperature Sensor Volts Too Low	Radiator coolant temperature sensor input below the minimum acceptable voltage.
P1281	Engine is Cold Too Long	Engine coolant temperature remains below normal operating temperatures during vehicle travel (Thermostat).
P1282	Fuel Pump Relay Control Circuit	An open or shorted condition detected in the fuel pump relay control circuit.
P1283	Idle Select Signal Invalid	ECM or fuel injection pump module internal fault condition detected.
P1284 (M)	Fuel Injection Pump Battery Voltage Out-Of-Range	Fuel injection pump module internal fault condition detected. Engine power will be derated.
P1285 (M)	Fuel Injection Pump Controller Always On	Fuel injection pump module relay circuit failure detected. Engine power will be derated.
P1286	Accelerator Position Sensor (APPS) Supply Voltage Too High	High voltage detected at APPS.
P1287	Fuel Injection Pump Controller Supply Voltage Low	ECM or fuel injection pump module internal fault condition detected. Engine power will be derated.
P1288	Intake Manifold Short Runner Solenoid Circuit	An open or shorted condition detected in the short runner tuning valve circuit.

EMISSIONS CONTROL (Continued)

(M) Malfunction Indicator Lamp (MIL) illuminated during engine operation if this DTC was recorded (depending if required by CARB and/or EPA). MIL is displayed as an engine icon on instrument panel.		
(G) Generator lamp illuminated		
Generic Scan Tool P-Code	DRB Scan Tool Display	Brief Description of DTC
P1289	Manifold Tune Valve Solenoid Circuit	An open or shorted condition detected in the manifold tuning valve solenoid control circuit.
P1290	CNG Fuel System Pressure Too High	Compressed natural gas system pressure above normal operating range.
P1291	No Temp Rise Seen From Intake Heaters	Energizing Heated Air Intake does not change intake air temperature sensor an acceptable amount.
P1291 (M)	No Temperature Rise Seen From Intake Air Heaters	Problem detected in intake manifold air heating system.
P1292	CNG Pressure Sensor Voltage Too High	Compressed natural gas pressure sensor reading above acceptable voltage.
P1293	CNG Pressure Sensor Voltage Too Low	Compressed natural gas pressure sensor reading below acceptable voltage.
P1294 (M)	Target Idle Not Reached	Target RPM not achieved during drive idle condition. Possible vacuum leak or IAC (AIS) lost steps.
P1295 (M)	No 5 Volts to TP Sensor	Loss of a 5 volt feed to the Throttle Position Sensor has been detected.
P1295 (M)	Accelerator Position Sensor (APPS) Supply Voltage Too Low	APPS supply voltage input below the minimum acceptable voltage.
P1296	No 5 Volts to MAP Sensor	Loss of a 5 volt feed to the MAP Sensor has been detected.
P1297 (M)	No Change in MAP From Start To Run	No difference is recognized between the MAP reading at engine idle and the stored barometric pressure reading.
P1298	Lean Operation at Wide Open Throttle	A prolonged lean condition is detected during Wide Open Throttle
P1299	Vacuum Leak Found (IAC Fully Seated)	MAP Sensor signal does not correlate to Throttle Position Sensor signal. Possible vacuum leak.
P1388	Auto Shutdown Relay Control Circuit	An open or shorted condition detected in the ASD or CNG shutoff relay control ckt.
P1388	Auto Shutdown Relay Control Circuit	An open or shorted condition detected in the auto shutdown relay circuit.
P1389	No ASD Relay Output Voltage At PCM	No Z1 or Z2 voltage sensed when the auto shutdown relay is energized.
P1389 (M)	No ASD Relay Output Voltage at PCM	An open condition detected In the ASD relay output circuit.
P1390	Timing Belt Skipped 1 Tooth or More	Relationship between Cam and Crank signals not correct
P1391 (M)	Intermittent Loss of CMP or CKP	Loss of the Cam Position Sensor or Crank Position sensor has occurred. For PL 2.0L
P1398 (M)	Mis-Fire Adaptive Numerator at Limit	PCM is unable to learn the Crank Sensor's signal in preparation for Misfire Diagnostics. Probable defective Crank Sensor
P1399	Wait To Start Lamp Cicuit	An open or shorted condition detected in the Wait to Start Lamp circuit.
P1403	No 5V to EGR Sens	Loss of 5v feed to the EGR position sensor.

EMISSIONS CONTROL (Continued)

(M) Malfunction Indicator Lamp (MIL) illuminated during engine operation if this DTC was recorded (depending if required by CARB and/or EPA). MIL is displayed as an engine icon on instrument panel.		
(G) Generator lamp illuminated		
Generic Scan Tool P-Code	DRB Scan Tool Display	Brief Description of DTC
P01475	Aux 5 Volt Supply Voltage High	Sensor supply voltage for ECM sensors is too high.
P1476	Too Little Secondary Air	Insufficient flow of secondary air injection detected during aspirator test (was P0411)
P1477	Too Much Secondary Air	Excessive flow of secondary air injection detected during aspirator test (was P0411).
P1478	Battery Temp Sensor Volts Out of Limit	Internal temperature sensor input voltage out of an acceptable range.
P1479	Transmission Fan Relay Circuit	An open or shorted condition detected in the transmission fan relay circuit.
P1480	PCV Solenoid Circuit	An open or shorted condition detected in the PCV solenoid circuit.
P1481	EATX RPM Pulse Perf	EATX RPM pulse generator signal for misfire detection does not correlate with expected value.
P1482	Catalyst Temperature Sensor Circuit Shorted Low	Catalyst temperature sensor circuit shorted low.
P1483	Catalyst Temperature Sensor Circuit Shorted High.	Catalyst temperature sensor circuit shorted high.
P1484	Catalytic Converter Overheat Detected	A catalyst overheat condition has been detected by the catalyst temperature sensor.
P1485	Air Injection Solenoid Circuit	An open or shorted condition detected in the air assist solenoid circuit.
P1486	Evap Leak Monitor Pinched Hose Found	LDP has detected a pinched hose in the evaporative hose system.
P1487	Hi Speed Rad Fan CTRL Relay Circuit	An open or shorted condition detected in the control circuit of the #2 high speed radiator fan control relay.
P1488	Auxiliary 5 Volt Supply Output Too Low	Auxiliary 5 volt sensor feed is sensed to be below an acceptable limit.
P1488	5 Volt Supply Voltage Low	Sensor supply voltage for ECM sensors is too low.
P1489	High Speed Fan CTRL Relay Circuit	An open or shorted condition detected in the control circuit of the high speed radiator fan control relay.
P1490	Low Speed Fan CTRL Relay Circuit	An open or shorted condition detected in control circuit of the low speed radiator fan control relay.
P1491	Rad Fan Control Relay Circuit	An open or shorted condition detected in the radiator fan control relay control circuit. This includes PWM solid state relays.
P1492	Ambient/Batt Temp Sen Volts Too High	External temperature sensor input above acceptable voltage.
P1492 (M)	Ambient/Batt Temp Sensor Volts Too High	Battery temperature sensor input voltage above an acceptable range.
P1493 (M)	Ambient/Batt Temp Sen Volts Too Low	External temperature sensor input below acceptable voltage.
P1493 (M)	Ambient/Batt Temp Sen Volts Too Low	Battery temperature sensor input voltage below an acceptable range.

EMISSIONS CONTROL (Continued)

(M) Malfunction Indicator Lamp (MIL) illuminated during engine operation if this DTC was recorded (depending if required by CARB and/or EPA). MIL is displayed as an engine icon on instrument panel.		
(G) Generator lamp illuminated		
Generic Scan Tool P-Code	DRB Scan Tool Display	Brief Description of DTC
P1494 (M)	Leak Detection Pump Sw or Mechanical Fault	Incorrect input state detected for the Leak Detection Pump (LDP) pressure switch.
P1495	Leak Detection Pump Solenoid Circuit	An open or shorted condition detected in the Leak Detection Pump (LDP) solenoid circuit.
P1496	5 Volt Supply, Output Too Low	5 volt sensor feed is sensed to be below an acceptable limit. (less than 4v for 4 sec)
P1498	High Speed Rad Fan Ground CTRL Rly Circuit	An open or shorted condition detected in the control circuit of the #3 high speed radiator fan control relay.
P1499	Hydraulic cooling fan solenoid circuit	An open or shorted condition detected in the cooling fan control solenoid circuit.
P1594 (G)	Charging System Voltage Too High	Battery voltage sense input above target charging voltage during engine operation.
P1594	Charging System Voltage Too High	Battery voltage sense input above target charging voltage during engine operation.
P1595	Speed Control Solenoid Circuits	An open or shorted condition detected in either of the speed control vacuum or vent solenoid control circuits.
P1595	Speed Control Solenoid Circuits	An open or shorted condition detected in the speed control vacuum or vent solenoid circuits.
P1596	Speed Control Switch Always High	Speed control switch input above maximum acceptable voltage.
P1597	Speed Control Switch Always Low	Speed control switch input below minimum acceptable voltage.
P1597	Speed Control Switch Always Low	Speed control switch input below the minimum acceptable voltage.
P1598	A/C Pressure Sensor Volts Too High	A/C pressure sensor input above maximum acceptable voltage.
P1598	A/C Sensor Input Hi	Problem detected in air conditioning electrical circuit.
P1599	A/C Pressure Sensor Volts Too Low	A/C pressure sensor input below minimum acceptable voltage.
P1599	A/C Sensor Input Lo	Problem detected in air conditioning electrical circuit.
P1680	Clutch Released Switch Circuit	Problem detected in clutch switch electrical circuit.
P1681	No I/P Cluster CCD/J1850 Messages Received	No CCD/J1850 messages received from the cluster control module.
P1682 (G)	Charging System Voltage Too Low	Battery voltage sense input below target charging voltage during engine operation and no significant change in voltage detected during active test of generator output circuit.
P1682	Charging System Voltage Too Low	Charging system output voltage low.
P1683	SPD CTRL PWR Relay; or S/C 12v Driver CKT	An open or shorted condition detected in the speed control servo power control circuit.
P1683	Spd ctrl pwr rly, or s/c 12v driver circuit	An open or shorted condition detected in the speed control servo power control circuit.

EMISSIONS CONTROL (Continued)

(M) Malfunction Indicator Lamp (MIL) illuminated during engine operation if this DTC was recorded (depending if required by CARB and/or EPA). MIL is displayed as an engine icon on instrument panel.		
(G) Generator lamp illuminated		
Generic Scan Tool P-Code	DRB Scan Tool Display	Brief Description of DTC
P1684	Batt Loss in 50 Star	The battery has been disconnected within the last 50 starts
P1685	SKIM Invalid Key	The engine controler has received an invalid key from the SKIM.
P1686	No SKIM BUS Messages Received	No CCD/J1850 messages received from the Smart Key Immobilizer Module (SKIM).
P1687	No MIC BUS Message	No CCD/J1850 messages received from the Mechanical Instrument Cluster (MIC) module.
P1688 (M)	Internal Fuel Injection Pump Controller Failure	Internal problem within the fuel injection pump. Low power, engine derated, or engine stops.
P1689 (M)	No Communication Between ECM and Injection Pump Module	Data link circuit failure between ECM and fuel injection pump. Low power, engine derated, or engine stops.
P1690 (M)	Fuel Injection Pump CKP Sensor Does Not Agree With ECM CKP Sensor	Problem in fuel sync signal. Possible injection pump timing problem. Low power, engine derated, or engine stops.
P1691	Fuel Injection Pump Controller Calibration Error	Internal fuel injection pump failure. Low power, engine derated, or engine stops.
P1692	DTC Set In ECM	A ″Companion DTC″ was set in both the ECM and PCM.
P1693 (M)	DTC Detected in Companion Module	A fault has been generated in the companion engine control module.
P1693 (M)	DTC Detected in PCM/ECM or DTC Detected in ECM	A ″Companion DTC″ was set in both the ECM and PCM.
P1694	Fault In Companion Module	No CCD/J1850 messages received from the powertrain control module-Aisin transmission
P1694 (M)	No CCD Messages received from ECM	Bus communication failure to PCM.
P1695	No CCD/J1850 Message From Body Control Module	No CCD/J1850 messages received from the body control module.
P1696	PCM Failure EEPROM Write Denied	Unsuccessful attempt to write to an EEPROM location by the control module.
P1697	PCM Failure SRI Mile Not Stored	Unsuccessful attempt to update Service Reminder Indicator (SRI or EMR) mileage in the control module EEPROM.
P1698	No CCD/J1850 Message From TCM	No CCD/J1850 messages received from the electronic transmission control module (EATX) or the Aisin transmission controller.
P1698	No CCD Messages received from PCM	Bus communication failure to PCM. A ″Companion DTC″ was set in both the ECM and PCM.
P1719	Skip Shift Solenoid Circuit	An open or shorted condition detected in the transmission 2-3 gear lock-out solenoid control circuit.
P1740	TCC or OD Sol Perf	A rationality error has been detected in either the TCC solenoid or overdrive solenoid systems.

EMISSIONS CONTROL (Continued)

(M) Malfunction Indicator Lamp (MIL) illuminated during engine operation if this DTC was recorded (depending if required by CARB and/or EPA). MIL is displayed as an engine icon on instrument panel.		
(G) Generator lamp illuminated		
Generic Scan Tool P-Code	DRB Scan Tool Display	Brief Description of DTC
P1740 (M)	TCC OR O/D Solenoid Performance	Problem detected in transmission convertor clutch and/or overdrive circuits (diesel engine with 4-speed auto. trans. only).
P1756 (M)	GOV Press Not Equal to Target @ 15-20 PSI	The requested pressure and the actual pressure are not within a tolerance band for the Governor Control System which is used to regulate governor pressure to control shifts for 1st, 2nd, and 3rd gear. (Mid Pressure Malfunction)
P1756 (M)	Governor Pressure Not Equal to Target @ 15-20 PSI	Governor sensor input not between 10 and 25 psi when requested (4-speed auto. trans. only).
P1757	GOV Press Not Equal to Target @ 15-20 PSI	The requested pressure and the actual pressure are not within a tolerance band for the Governor Control System which is used to regulate governor pressure to control shifts for 1st, 2nd, and 3rd gear (Zero Pressure Malfunction)
P1757 (M)	Governor Pressure Above 3 PSI In Gear With 0 MPH	Governor pressure greater than 3 psi when requested to be 0 psi (4-speed auto. trans. only).
P1762 (M)	Gov Press Sen Offset Volts Too Lo or High	The Governor Pressure Sensor input is greater than a calibration limit or is less than a calibration limit for 3 consecutive park/neutral calibrations.
P1762 (M)	Governor Press Sen Offset Volts Too Low or High	Sensor input greater or less than calibration for 3 consecutive Neutral/Park occurrences (4-speed auto. trans. only).
P1763	Governor Pressure Sensor Volts Too Hi	The Governor Pressure Sensor input is above an acceptable voltage level.
P1763 (M)	Governor Pressure Sensor Volts Too HI	Voltage greater than 4.89 volts (4-speed auto. trans. only).
P1764 (M)	Governor Pressure Sensor Volts Too Low	The Governor Pressure Sensor input is below an acceptable voltage level.
P1764 (M)	Governor Pressure Sensor Volts Too Low	Voltage less than .10 volts (4-speed auto. trans. only).
P1765 (M)	Trans 12 Volt Supply Relay CTRL Circuit	An open or shorted condition is detected in the Transmission Relay control circuit. This relay supplies power to the TCC
P1765 (M)	Trans 12 Volt Supply Relay Ctrl Circuit	Current state of solenoid output port is different than expected (4-speed auto. trans. only).
P1899 (M)	P/N Switch Stuck in Park or in Gear	Incorrect input state detected for the Park/Neutral switch.
P1899 (M)	P/N Switch Stuck in Park or in Gear	Incorrect input state detected for the Park/Neutral switch (3 or 4-speed auto. trans. only).

EMISSIONS CONTROL (Continued)

DESCRIPTION - TASK MANAGER

The PCM is responsible for efficiently coordinating the operation of all the emissions-related components. The PCM is also responsible for determining if the diagnostic systems are operating properly. The software designed to carry out these responsibilities is call the 'Task Manager'.

OPERATION - MONITORED SYSTEMS

There are new electronic circuit monitors that check fuel, emission, engine and ignition performance. These monitors use information from various sensor circuits to indicate the overall operation of the fuel, engine, ignition and emission systems and thus the emissions performance of the vehicle.

The fuel, engine, ignition and emission systems monitors do not indicate a specific component problem. They do indicate that there is an implied problem within one of the systems and that a specific problem must be diagnosed.

If any of these monitors detect a problem affecting vehicle emissions, the Malfunction Indicator Lamp (MIL) will be illuminated. These monitors generate Diagnostic Trouble Codes that can be displayed with the MIL or a scan tool.

The following is a list of the system monitors:

- Misfire Monitor
- Fuel System Monitor
- Oxygen Sensor Monitor
- Oxygen Sensor Heater Monitor
- Catalyst Monitor
- Leak Detection Pump Monitor (if equipped)

All these system monitors require two consecutive trips with the malfunction present to set a fault.

Refer to the appropriate Powertrain Diagnostics Procedures manual for diagnostic procedures.

The following is an operation and description of each system monitor :

OXYGEN SENSOR (O2S) MONITOR

Effective control of exhaust emissions is achieved by an oxygen feedback system. The most important element of the feedback system is the O2S. The O2S is located in the exhaust path. Once it reaches operating temperature 300° to 350°C (572° to 662°F), the sensor generates a voltage that is inversely proportional to the amount of oxygen in the exhaust. The information obtained by the sensor is used to calculate the fuel injector pulse width. This maintains a 14.7 to 1 Air Fuel (A/F) ratio. At this mixture ratio, the catalyst works best to remove hydrocarbons (HC), carbon monoxide (CO) and nitrogen oxide (NOx) from the exhaust.

The O2S is also the main sensing element for the Catalyst and Fuel Monitors.

The O2S can fail in any or all of the following manners:

- slow response rate
- reduced output voltage
- dynamic shift
- shorted or open circuits

Response rate is the time required for the sensor to switch from lean to rich once it is exposed to a richer than optimum A/F mixture or vice versa. As the sensor starts malfunctioning, it could take longer to detect the changes in the oxygen content of the exhaust gas.

The output voltage of the O2S ranges from 0 to 1 volt. A good sensor can easily generate any output voltage in this range as it is exposed to different concentrations of oxygen. To detect a shift in the A/F mixture (lean or rich), the output voltage has to change beyond a threshold value. A malfunctioning sensor could have difficulty changing beyond the threshold value.

OXYGEN SENSOR HEATER MONITOR

If there is an oxygen sensor (O2S) shorted to voltage DTC, as well as a O2S heater DTC, the O2S fault MUST be repaired first. Before checking the O2S fault, verify that the heater circuit is operating correctly.

Effective control of exhaust emissions is achieved by an oxygen feedback system. The most important element of the feedback system is the O2S. The O2S is located in the exhaust path. Once it reaches operating temperature 300° to 350°C (572 ° to 662°F), the sensor generates a voltage that is inversely proportional to the amount of oxygen in the exhaust. The information obtained by the sensor is used to calculate the fuel injector pulse width. This maintains a 14.7 to 1 Air Fuel (A/F) ratio. At this mixture ratio, the catalyst works best to remove hydrocarbons (HC), carbon monoxide (CO) and nitrogen oxide (NOx) from the exhaust.

The voltage readings taken from the O2S sensor are very temperature sensitive. The readings are not accurate below 300°C. Heating of the O2S sensor is done to allow the engine controller to shift to closed loop control as soon as possible. The heating element used to heat the O2S sensor must be tested to ensure that it is heating the sensor properly.

The O2S sensor circuit is monitored for a drop in voltage. The sensor output is used to test the heater by isolating the effect of the heater element on the O2S sensor output voltage from the other effects.

LEAK DETECTION PUMP MONITOR (IF EQUIPPED)

The leak detection assembly incorporates two primary functions: it must detect a leak in the evapora-

EMISSIONS CONTROL (Continued)

tive system and seal the evaporative system so the leak detection test can be run.

The primary components within the assembly are: A three port solenoid that activates both of the functions listed above; a pump which contains a switch, two check valves and a spring/diaphragm, a canister vent valve (CVV) seal which contains a spring loaded vent seal valve.

Immediately after a cold start, between predetermined temperature thresholds limits, the three port solenoid is briefly energized. This initializes the pump by drawing air into the pump cavity and also closes the vent seal. During non test conditions the vent seal is held open by the pump diaphragm assembly which pushes it open at the full travel position. The vent seal will remain closed while the pump is cycling due to the reed switch triggering of the three port solenoid that prevents the diaphragm assembly from reaching full travel. After the brief initialization period, the solenoid is de-energized allowing atmospheric pressure to enter the pump cavity, thus permitting the spring to drive the diaphragm which forces air out of the pump cavity and into the vent system. When the solenoid is energized and de energized, the cycle is repeated creating flow in typical diaphragm pump fashion. The pump is controlled in 2 modes:

Pump Mode: The pump is cycled at a fixed rate to achieve a rapid pressure build in order to shorten the overall test length.

Test Mode: The solenoid is energized with a fixed duration pulse. Subsequent fixed pulses occur when the diaphragm reaches the Switch closure point.

The spring in the pump is set so that the system will achieve an equalized pressure of about 7.5” water. The cycle rate of pump strokes is quite rapid as the system begins to pump up to this pressure. As the pressure increases, the cycle rate starts to drop off. If there is no leak in the system, the pump would eventually stop pumping at the equalized pressure. If there is a leak, it will continue to pump at a rate representative of the flow characteristic of the size of the leak. From this information we can determine if the leak is larger than the required detection limit (currently set at .040” orifice by CARB). If a leak is revealed during the leak test portion of the test, the test is terminated at the end of the test mode and no further system checks will be performed.

After passing the leak detection phase of the test, system pressure is maintained by turning on the LDP’s solenoid until the purge system is activated. Purge activation in effect creates a leak. The cycle rate is again interrogated and when it increases due to the flow through the purge system, the leak check portion of the diagnostic is complete.

The canister vent valve will unseal the system after completion of the test sequence as the pump diaphragm assembly moves to the full travel position.

Evaporative system functionality will be verified by using the stricter evap purge flow monitor. At an appropriate warm idle the LDP will be energized to seal the canister vent. The purge flow will be clocked up from some small value in an attempt to see a shift in the 02 control system. If fuel vapor, indicated by a shift in the 02 control, is present the test is passed. If not, it is assumed that the purge system is not functioning in some respect. The LDP is again turned off and the test is ended.

MISFIRE MONITOR

Excessive engine misfire results in increased catalyst temperature and causes an increase in HC emissions. Severe misfires could cause catalyst damage. To prevent catalytic convertor damage, the PCM monitors engine misfire.

The Powertrain Control Module (PCM) monitors for misfire during most engine operating conditions (positive torque) by looking at changes in the crankshaft speed. If a misfire occurs the speed of the crankshaft will vary more than normal.

FUEL SYSTEM MONITOR

To comply with clean air regulations, vehicles are equipped with catalytic converters. These converters reduce the emission of hydrocarbons, oxides of nitrogen and carbon monoxide. The catalyst works best when the Air Fuel (A/F) ratio is at or near the optimum of 14.7 to 1.

The PCM is programmed to maintain the optimum air/fuel ratio of 14.7 to 1. This is done by making short term corrections in the fuel injector pulse width based on the O2S sensor output. The programmed memory acts as a self calibration tool that the engine controller uses to compensate for variations in engine specifications, sensor tolerances and engine fatigue over the life span of the engine. By monitoring the actual fuel-air ratio with the O2S sensor (short term) and multiplying that with the program long-term (adaptive) memory and comparing that to the limit, it can be determined whether it will pass an emissions test. If a malfunction occurs such that the PCM cannot maintain the optimum A/F ratio, then the MIL will be illuminated.

CATALYST MONITOR

To comply with clean air regulations, vehicles are equipped with catalytic converters. These converters reduce the emission of hydrocarbons, oxides of nitrogen and carbon monoxide.

Normal vehicle miles or engine misfire can cause a catalyst to decay. A meltdown of the ceramic core can

cause a reduction of the exhaust passage. This can increase vehicle emissions and deteriorate engine performance, driveability and fuel economy.

The catalyst monitor uses dual oxygen sensors (O2S's) to monitor the efficiency of the converter. The dual O2S's sensor strategy is based on the fact that as a catalyst deteriorates, its oxygen storage capacity and its efficiency are both reduced. By monitoring the oxygen storage capacity of a catalyst, its efficiency can be indirectly calculated. The upstream O2S is used to detect the amount of oxygen in the exhaust gas before the gas enters the catalytic converter. The PCM calculates the A/F mixture from the output of the O2S. A low voltage indicates high oxygen content (lean mixture). A high voltage indicates a low content of oxygen (rich mixture).

When the upstream O2S detects a lean condition, there is an abundance of oxygen in the exhaust gas. A functioning converter would store this oxygen so it can use it for the oxidation of HC and CO. As the converter absorbs the oxygen, there will be a lack of oxygen downstream of the converter. The output of the downstream O2S will indicate limited activity in this condition.

As the converter loses the ability to store oxygen, the condition can be detected from the behavior of the downstream O2S. When the efficiency drops, no chemical reaction takes place. This means the concentration of oxygen will be the same downstream as upstream. The output voltage of the downstream O2S copies the voltage of the upstream sensor. The only difference is a time lag (seen by the PCM) between the switching of the O2S's.

To monitor the system, the number of lean-to-rich switches of upstream and downstream O2S's is counted. The ratio of downstream switches to upstream switches is used to determine whether the catalyst is operating properly. An effective catalyst will have fewer downstream switches than it has upstream switches i.e., a ratio closer to zero. For a totally ineffective catalyst, this ratio will be one-to-one, indicating that no oxidation occurs in the device.

The system must be monitored so that when catalyst efficiency deteriorates and exhaust emissions increase to over the legal limit, the MIL will be illuminated.

DESCRIPTION - TRIP DEFINITION

The term "Trip" has different meanings depending on what the circumstances are. If the MIL (Malfunction Indicator Lamp) is OFF, a Trip is defined as when the Oxygen Sensor Monitor and the Catalyst Monitor have been completed in the same drive cycle.

When any Emission DTC is set, the MIL on the dash is turned ON. When the MIL is ON, it takes 3 good trips to turn the MIL OFF. In this case, it depends on what type of DTC is set to know what a "Trip" is.

For the Fuel Monitor or Mis-Fire Monitor (continuous monitor), the vehicle must be operated in the "Similar Condition Window" for a specified amount of time to be considered a Good Trip.

If a Non-Contiuous OBDII Monitor fails twice in a row and turns ON the MIL, re-running that monitor which previously failed, on the next start-up and passing the monitor, is considered to be a Good Trip. These will include the following:

- Oxygen Sensor
- Catalyst Monitor
- Purge Flow Monitor
- Leak Detection Pump Monitor (if equipped)
- EGR Monitor (if equipped)
- Oxygen Sensor Heater Monitor

If any other Emission DTC is set (not an OBDII Monitor), a Good Trip is considered to be when the Oxygen Sensor Monitor and Catalyst Monitor have been completed; or 2 Minutes of engine run time if the Oxygen Sensor Monitor or Catalyst Monitor have been stopped from running.

It can take up to 2 Failures in a row to turn on the MIL. After the MIL is ON, it takes 3 Good Trips to turn the MIL OFF. After the MIL is OFF, the PCM will self-erase the DTC after 40 Warm-up cycles. A Warm-up cycle is counted when the ECT (Engine Coolant Temperature Sensor) has crossed 160°F and has risen by at least 40°F since the engine has been started.

OPERATION - COMPONENT MONITORS

There are several components that will affect vehicle emissions if they malfunction. If one of these components malfunctions the Malfunction Indicator Lamp (MIL) will illuminate.

Some of the component monitors are checking for proper operation of the part. Electrically operated components now have input (rationality) and output (functionality) checks. Previously, a component like the Throttle Position sensor (TPS) was checked by the PCM for an open or shorted circuit. If one of these conditions occurred, a DTC was set. Now there is a check to ensure that the component is working. This is done by watching for a TPS indication of a greater or lesser throttle opening than MAP and engine rpm indicate. In the case of the TPS, if engine vacuum is high and engine rpm is 1600 or greater and the TPS indicates a large throttle opening, a DTC will be set. The same applies to low vacuum if the TPS indicates a small throttle opening.

All open/short circuit checks or any component that has an associated limp in will set a fault after 1 trip with the malfunction present. Components without

EMISSIONS CONTROL (Continued)

an associated limp in will take two trips to illuminate the MIL.

Refer to the Diagnostic Trouble Codes Description Charts in this section and the appropriate Powertrain Diagnostic Procedure Manual for diagnostic procedures.

DESCRIPTION - NON-MONITORED CIRCUITS

The PCM does not monitor the following circuits, systems and conditions that could have malfunctions causing driveability problems. The PCM might not store diagnostic trouble codes for these conditions. However, problems with these systems may cause the PCM to store diagnostic trouble codes for other systems or components. For example, a fuel pressure problem will not register a fault directly, but could cause a rich/lean condition or misfire. This could cause the PCM to store an oxygen sensor or misfire diagnostic trouble code

FUEL PRESSURE

The fuel pressure regulator controls fuel system pressure. The PCM cannot detect a clogged fuel pump inlet filter, clogged in-line fuel filter, or a pinched fuel supply or return line. However, these could result in a rich or lean condition causing the PCM to store an oxygen sensor or fuel system diagnostic trouble code.

SECONDARY IGNITION CIRCUIT

The PCM cannot detect an inoperative ignition coil, fouled or worn spark plugs, ignition cross firing, or open spark plug cables.

CYLINDER COMPRESSION

The PCM cannot detect uneven, low, or high engine cylinder compression.

EXHAUST SYSTEM

The PCM cannot detect a plugged, restricted or leaking exhaust system, although it may set a fuel system fault.

FUEL INJECTOR MECHANICAL MALFUNCTIONS

The PCM cannot determine if a fuel injector is clogged, the needle is sticking or if the wrong injector is installed. However, these could result in a rich or lean condition causing the PCM to store a diagnostic trouble code for either misfire, an oxygen sensor, or the fuel system.

EXCESSIVE OIL CONSUMPTION

Although the PCM monitors engine exhaust oxygen content when the system is in closed loop, it cannot determine excessive oil consumption.

THROTTLE BODY AIRFLOW

The PCM cannot detect a clogged or restricted air cleaner inlet or filter element.

VACUUM ASSIST

The PCM cannot detect leaks or restrictions in the vacuum circuits of vacuum assisted engine control system devices. However, these could cause the PCM to store a MAP sensor diagnostic trouble code and cause a high idle condition.

PCM SYSTEM GROUND

The PCM cannot determine a poor system ground. However, one or more diagnostic trouble codes may be generated as a result of this condition. The module should be mounted to the body at all times, also during diagnostic.

PCM CONNECTOR ENGAGEMENT

The PCM may not be able to determine spread or damaged connector pins. However, it might store diagnostic trouble codes as a result of spread connector pins.

OPERATION - HIGH AND LOW LIMITS

The PCM compares input signal voltages from each input device with established high and low limits for the device. If the input voltage is not within limits and other criteria are met, the PCM stores a diagnostic trouble code in memory. Other diagnostic trouble code criteria might include engine RPM limits or input voltages from other sensors or switches that must be present before verifying a diagnostic trouble code condition.

OPERATION - TASK MANAGER

The Task Manager determines which tests happen when and which functions occur when. Many of the diagnostic steps required by OBD II must be performed under specific operating conditions. The Task Manager software organizes and prioritizes the diagnostic procedures. The job of the Task Manager is to determine if conditions are appropriate for tests to be run, monitor the parameters for a trip for each test, and record the results of the test. Following are the responsibilities of the Task Manager software:

- Test Sequence
- MIL Illumination
- Diagnostic Trouble Codes (DTCs)
- Trip Indicator
- Freeze Frame Data Storage
- Similar Conditions Window

Test Sequence

In many instances, emissions systems must fail diagnostic tests more than once before the PCM illu-

EMISSIONS CONTROL (Continued)

minates the MIL. These tests are know as 'two trip monitors.' Other tests that turn the MIL lamp on after a single failure are known as 'one trip monitors.' A trip is defined as 'start the vehicle and operate it to meet the criteria necessary to run the given monitor.'

Many of the diagnostic tests must be performed under certain operating conditions. However, there are times when tests cannot be run because another test is in progress (conflict), another test has failed (pending) or the Task Manager has set a fault that may cause a failure of the test (suspend).

- Pending

Under some situations the Task Manager will not run a monitor if the MIL is illuminated and a fault is stored from another monitor. In these situations, the Task Manager postpones monitors **pending** resolution of the original fault. The Task Manager does not run the test until the problem is remedied.

For example, when the MIL is illuminated for an Oxygen Sensor fault, the Task Manager does not run the Catalyst Monitor until the Oxygen Sensor fault is remedied. Since the Catalyst Monitor is based on signals from the Oxygen Sensor, running the test would produce inaccurate results.

- Conflict

There are situations when the Task Manager does not run a test if another monitor is in progress. In these situations, the effects of another monitor running could result in an erroneous failure. If this **conflict** is present, the monitor is not run until the conflicting condition passes. Most likely the monitor will run later after the conflicting monitor has passed.

For example, if the Fuel System Monitor is in progress, the Task Manager does not run the EGR Monitor. Since both tests monitor changes in air/fuel ratio and adaptive fuel compensation, the monitors will conflict with each other.

- Suspend

Occasionally the Task Manager may not allow a two trip fault to mature. The Task Manager will **suspend** the maturing of a fault if a condition exists that may induce an erroneous failure. This prevents illuminating the MIL for the wrong fault and allows more precis diagnosis.

For example, if the PCM is storing a one trip fault for the Oxygen Sensor and the EGR monitor, the Task Manager may still run the EGR Monitor but will suspend the results until the Oxygen Sensor Monitor either passes or fails. At that point the Task Manager can determine if the EGR system is actually failing or if an Oxygen Sensor is failing.

MIL Illumination

The PCM Task Manager carries out the illumination of the MIL. The Task Manager triggers MIL illumination upon test failure, depending on monitor failure criteria.

The Task Manager Screen shows both a Requested MIL state and an Actual MIL state. When the MIL is illuminated upon completion of a test for a third trip, the Requested MIL state changes to OFF. However, the MIL remains illuminated until the next key cycle. (On some vehicles, the MIL will actually turn OFF during the third key cycle) During the key cycle for the third good trip, the Requested MIL state is OFF, while the Actual MIL state is ON. After the next key cycle, the MIL is not illuminated and both MIL states read OFF.

Diagnostic Trouble Codes (DTCs)

With OBD II, different DTC faults have different priorities according to regulations. As a result, the priorities determine MIL illumination and DTC erasure. DTCs are entered according to individual priority. DTCs with a higher priority overwrite lower priority DTCs.

Priorities

- Priority 0 —Non-emissions related trouble codes
- Priority 1 — One trip failure of a two trip fault for non-fuel system and non-misfire.
- Priority 2 — One trip failure of a two trip fault for fuel system (rich/lean) or misfire.
- Priority 3 — Two trip failure for a non-fuel system and non-misfire or matured one trip comprehensive component fault.
- Priority 4 — Two trip failure or matured fault for fuel system (rich/lean) and misfire or one trip catalyst damaging misfire.

Non-emissions related failures have no priority. One trip failures of two trip faults have low priority. Two trip failures or matured faults have higher priority. One and two trip failures of fuel system and misfire monitor take precedence over non-fuel system and non-misfire failures.

DTC Self Erasure

With one trip components or systems, the MIL is illuminated upon test failure and DTCs are stored.

Two trip monitors are components requiring failure in two consecutive trips for MIL illumination. Upon failure of the first test, the Task Manager enters a maturing code. If the component fails the test for a second time the code matures and a DTC is set.

After three good trips the MIL is extinguished and the Task Manager automatically switches the trip counter to a warm-up cycle counter. DTCs are auto-

EMISSIONS CONTROL (Continued)

matically erased following 40 warm-up cycles if the component does not fail again.

For misfire and fuel system monitors, the component must pass the test under a Similar Conditions Window in order to record a good trip. A Similar Conditions Window is when engine RPM is within ±375 RPM and load is within ±10% of when the fault occurred.

NOTE: It is important to understand that a component does not have to fail under a similar window of operation to mature. It must pass the test under a Similar Conditions Window when it failed to record a Good Trip for DTC erasure for misfire and fuel system monitors.

DTCs can be erased anytime with a DRB III. Erasing the DTC with the DRB III erases all OBD II information. The DRB III automatically displays a warning that erasing the DTC will also erase all OBD II monitor data. This includes all counter information for warm-up cycles, trips and Freeze Frame.

Trip Indicator

The **Trip** is essential for running monitors and extinguishing the MIL. In OBD II terms, a trip is a set of vehicle operating conditions that must be met for a specific monitor to run. All trips begin with a key cycle.

Good Trip

The Good Trip counters are as follows:

- Specific Good Trip
- Fuel System Good Trip
- Misfire Good Trip
- Alternate Good Trip (appears as a Global Good Trip on DRB III)
- Comprehensive Components
- Major Monitor
- Warm-Up Cycles

Specific Good Trip

The term Good Trip has different meanings depending on the circumstances:

- If the MIL is OFF, a trip is defined as when the Oxygen Sensor Monitor and the Catalyst Monitor have been completed in the same drive cycle.
- If the MIL is ON and a DTC was set by the Fuel Monitor or Misfire Monitor (both continuous monitors), the vehicle must be operated in the Similar Condition Window for a specified amount of time.
- If the MIL is ON and a DTC was set by a Task Manager commanded once-per-trip monitor (such as the Oxygen Sensor Monitor, Catalyst Monitor, Purge Flow Monitor, Leak Detection Pump Monitor, EGR Monitor or Oxygen Sensor Heater Monitor), a good trip is when the monitor is passed on the next start-up.
- If the MIL is ON and any other emissions DTC was set (not an OBD II monitor), a good trip occurs when the Oxygen Sensor Monitor and Catalyst Monitor have been completed, or two minutes of engine run time if the Oxygen Sensor Monitor and Catalyst Monitor have been stopped from running.

Fuel System Good Trip

To count a good trip (three required) and turn off the MIL, the following conditions must occur:

- Engine in closed loop
- Operating in Similar Conditions Window
- Short Term multiplied by Long Term less than threshold
- Less than threshold for a predetermined time

If all of the previous criteria are met, the PCM will count a good trip (three required) and turn off the MIL.

Misfire Good Trip

If the following conditions are met the PCM will count one good trip (three required) in order to turn off the MIL:

- Operating in Similar Condition Window
- 1000 engine revolutions with no misfire

Warm-Up Cycles

Once the MIL has been extinguished by the Good Trip Counter, the PCM automatically switches to a Warm-Up Cycle Counter that can be viewed on the DRB III. Warm-Up Cycles are used to erase DTCs and Freeze Frames. Forty Warm-Up cycles must occur in order for the PCM to self-erase a DTC and Freeze Frame. A Warm-Up Cycle is defined as follows:

- Engine coolant temperature must start below and rise above 160° F
- Engine coolant temperature must rise by 40° F
- No further faults occur

Freeze Frame Data Storage

Once a failure occurs, the Task Manager records several engine operating conditions and stores it in a Freeze Frame. The Freeze Frame is considered one frame of information taken by an on-board data recorder. When a fault occurs, the PCM stores the input data from various sensors so that technicians can determine under what vehicle operating conditions the failure occurred.

The data stored in Freeze Frame is usually recorded when a system fails the first time for two trip faults. Freeze Frame data will only be overwritten by a different fault with a higher priority.

CAUTION: Erasing DTCs, either with the DRB III or by disconnecting the battery, also clears all Freeze Frame data.

EMISSIONS CONTROL (Continued)

Similar Conditions Window

The Similar Conditions Window displays information about engine operation during a monitor. Absolute MAP (engine load) and Engine RPM are stored in this window when a failure occurs. There are two different Similar conditions Windows: Fuel System and Misfire.

FUEL SYSTEM

- **Fuel System Similar Conditions Window** — An indicator that 'Absolute MAP When Fuel Sys Fail' and 'RPM When Fuel Sys Failed' are all in the same range when the failure occurred. Indicated by switching from 'NO' to 'YES'.
- **Absolute MAP When Fuel Sys Fail** — The stored MAP reading at the time of failure. Informs the user at what engine load the failure occurred.
- **Absolute MAP** — A live reading of engine load to aid the user in accessing the Similar Conditions Window.
- **RPM When Fuel Sys Fail** — The stored RPM reading at the time of failure. Informs the user at what engine RPM the failure occurred.
- **Engine RPM** — A live reading of engine RPM to aid the user in accessing the Similar Conditions Window.
- **Adaptive Memory Factor** — The PCM utilizes both Short Term Compensation and Long Term Adaptive to calculate the Adaptive Memory Factor for total fuel correction.
- **Upstream O2S Volts** — A live reading of the Oxygen Sensor to indicate its performance. For example, stuck lean, stuck rich, etc.
- **SCW Time in Window (Similar Conditions Window Time in Window)** — A timer used by the PCM that indicates that, after all Similar Conditions have been met, if there has been enough good engine running time in the SCW without failure detected. This timer is used to increment a Good Trip.
- **Fuel System Good Trip Counter** — A Trip Counter used to turn OFF the MIL for Fuel System DTCs. To increment a Fuel System Good Trip, the engine must be in the Similar Conditions Window, Adaptive Memory Factor must be less than calibrated threshold and the Adaptive Memory Factor must stay below that threshold for a calibrated amount of time.
- **Test Done This Trip** — Indicates that the monitor has already been run and completed during the current trip.

MISFIRE

- **Same Misfire Warm-Up State** — Indicates if the misfire occurred when the engine was warmed up (above 160° F).
- **In Similar Misfire Window** — An indicator that 'Absolute MAP When Misfire Occurred' and 'RPM When Misfire Occurred' are all in the same range when the failure occurred. Indicated by switching from 'NO' to 'YES'.
- **Absolute MAP When Misfire Occurred** — The stored MAP reading at the time of failure. Informs the user at what engine load the failure occurred.
- **Absolute MAP** — A live reading of engine load to aid the user in accessing the Similar Conditions Window.
- **RPM When Misfire Occurred** — The stored RPM reading at the time of failure. Informs the user at what engine RPM the failure occurred.
- **Engine RPM** — A live reading of engine RPM to aid the user in accessing the Similar Conditions Window.
- **Adaptive Memory Factor** — The PCM utilizes both Short Term Compensation and Long Term Adaptive to calculate the Adaptive Memory Factor for total fuel correction.
- **200 Rev Counter** — Counts 0–100 720 degree cycles.
- **SCW Cat 200 Rev Counter** — Counts when in similar conditions.
- **SCW FTP 1000 Rev Counter** — Counts 0–4 when in similar conditions.
- **Misfire Good Trip Counter** — Counts up to three to turn OFF the MIL.
- **Misfire Data**— Data collected during test.
- **Test Done This Trip**— Indicates YES when the test is done.

EVAPORATIVE EMISSIONS

TABLE OF CONTENTS

	page
EVAPORATIVE EMISSIONS	
DESCRIPTION	23
OPERATION	24
SPECIFICATIONS	26
CCV HOSE	
DIAGNOSIS AND TESTING	26
CCV SYSTEM TEST - 4.0L	26
REMOVAL	26
INSTALLATION	27
EVAP/PURGE SOLENOID	
DESCRIPTION	27
REMOVAL	27
INSTALLATION	27
FUEL FILLER CAP	
DESCRIPTION	28
OPERATION	28
REMOVAL	28
LEAK DETECTION PUMP	
DESCRIPTION	28
REMOVAL	30
INSTALLATION	30
PCV VALVE	
DIAGNOSIS AND TESTING	30
PCV VALVE/PCV SYSTEM TEST - 4.7L	30
REMOVAL	31
INSTALLATION	32
VACUUM LINES	
DIAGNOSIS AND TESTING	32
VACUUM LINES	32
VAPOR CANISTER	
DESCRIPTION	32
REMOVAL	32
INSTALLATION	33

EVAPORATIVE EMISSIONS

DESCRIPTION - EVAPORATION CONTROL SYSTEM

The evaporation control system prevents the emission of fuel tank vapors into the atmosphere. When fuel evaporates in the fuel tank, the vapors pass through vent hoses or tubes to a charcoal filled evaporative canister. The canister temporarily holds the vapors. The Powertrain Control Module (PCM) allows intake manifold vacuum to draw vapors into the combustion chambers during certain operating conditions.

All engines use a duty cycle purge system. The PCM controls vapor flow by operating the duty cycle EVAP purge solenoid. Refer to Duty Cycle EVAP Canister Purge Solenoid.

When equipped with certain emissions packages, a Leak Detection Pump (LDP) will be used as part of the evaporative system for OBD II requirements. Also refer to Leak Detection Pump.

NOTE: The evaporative system uses specially manufactured lines/hoses. If replacement becomes necessary, only use fuel resistant hose.

EVAPORATIVE EMISSIONS (Continued)

DESCRIPTION - CCV SYSTEM

The 4.0L 6–cylinder engine is equipped with a Crankcase Ventilation (CCV) system. The system consists of:

- A fixed orifice fitting of a calibrated size. This fitting is pressed into a rubber grommet located on the top/rear of cylinder head (valve) cover (Fig. 1).
- a pair of breather tubes (lines) to connect the system components.
- the air cleaner housing.
- an air inlet fitting (Fig. 1).

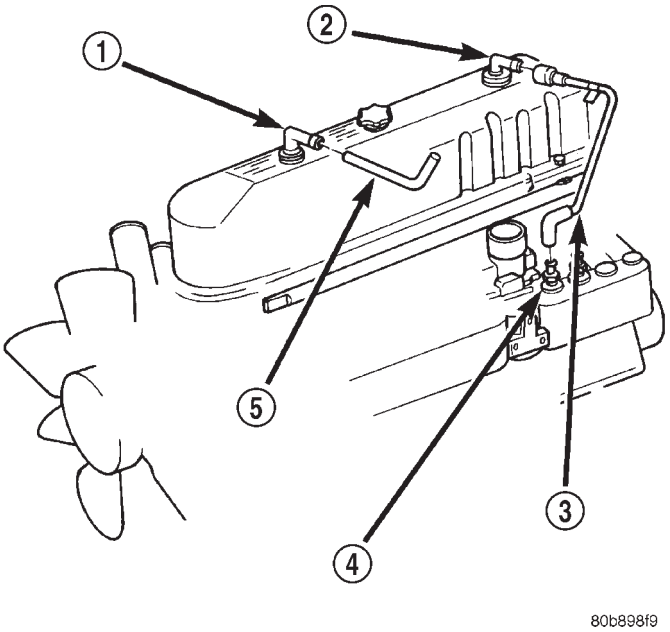

Fig. 1 CCV System—4.0L Engine

1 - AIR INLET FITTING
2 - FIXED ORIFICE FITTING
3 - CCV BREATHER TUBE (REAR)
4 - INT. MAN. FITTING
5 - CCV BREATHER TUBE (FRONT)

DESCRIPTION - PCV SYSTEM

The 4.7L V-8 engine is equipped with a closed crankcase ventilation system and a Positive Crankcase Ventilation (PCV) valve.

This system consists of:

- a PCV valve mounted to the oil filler housing (Fig. 2). The PCV valve is sealed to the oil filler housing with an o-ring.
- the air cleaner housing
- two interconnected breathers threaded into the rear of each cylinder head (Fig. 3).
- tubes and hose to connect the system components.

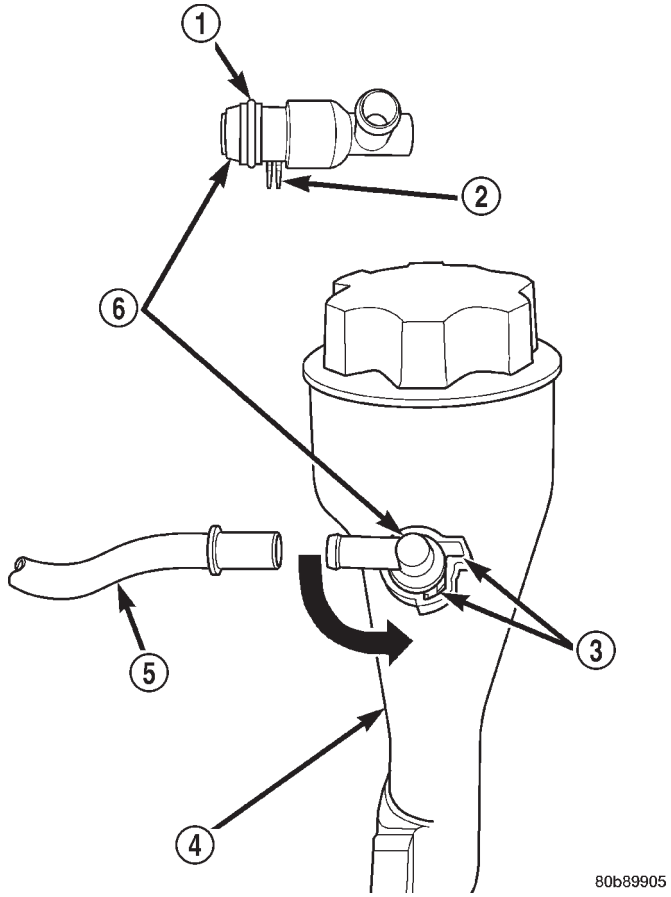

Fig. 2 PCV Valve/Oil Filler Tube (Housing)—4.7L Engine

1 - O-RING
2 - LOCATING TABS
3 - CAM LOCK
4 - OIL FILLER TUBE
5 - PCV LINE/HOSE
6 - PCV VALVE

OPERATION - 4.0L CCV SYSTEM

The CCV system performs the same function as a conventional PCV system, but does not use a vacuum controlled PCV valve.

The fixed orifice fitting meters the amount of crankcase vapors drawn out of the engine.

When the engine is operating, fresh air enters the engine and mixes with crankcase vapors. Engine vacuum draws the vapor/air mixture through the fixed orifice and into the intake manifold. The vapors are then consumed during engine combustion.

EVAPORATIVE EMISSIONS (Continued)

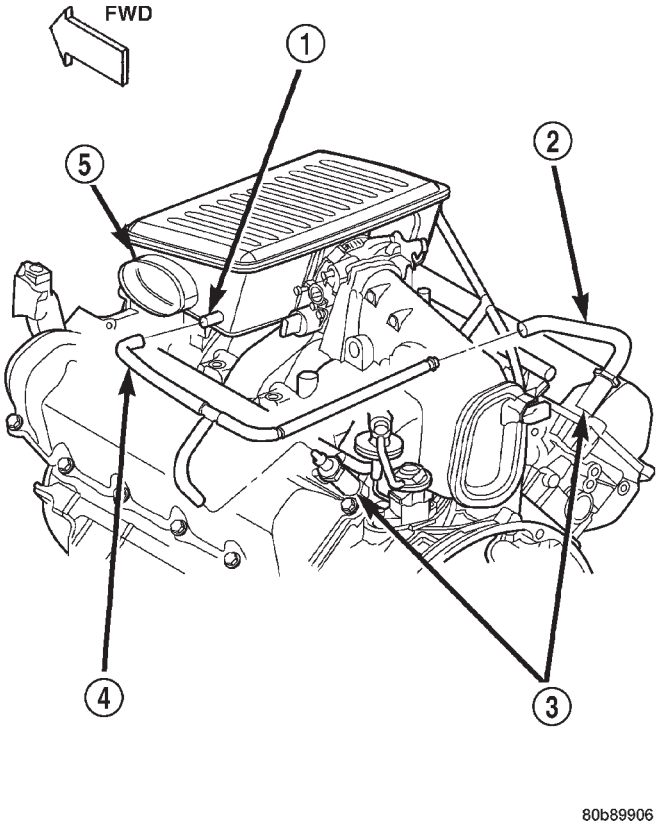

Fig. 3 PCV System Hoses/Tubes—4.7L Engine

1 - FRESH AIR FITTING
2 - CONNECTING TUBES/HOSES
3 - CRANKCASE BREATHERS (2)
4 - RUBBER HOSE
5 - AIR CLEANER RESONATOR

OPERATION - 4.7L PCV SYSTEM

The PCV system operates by engine intake manifold vacuum. Filtered air is routed into the crankcase through the air cleaner hose and crankcase breathers. The metered air, along with crankcase vapors, are drawn through the PCV valve and into a passage in the intake manifold. The PCV system manages crankcase pressure and meters blow-by gases to the intake system, reducing engine sludge formation.

The PCV valve contains a spring loaded plunger. This plunger meters the amount of crankcase vapors routed into the combustion chamber based on intake manifold vacuum.

TYPICAL PCV valves are shown in (Fig. 4), (Fig. 5) and (Fig. 6).

When the engine is not operating, or during an engine pop-back, the spring forces the plunger back against the seat (Fig. 4). This will prevent vapors from flowing through the valve.

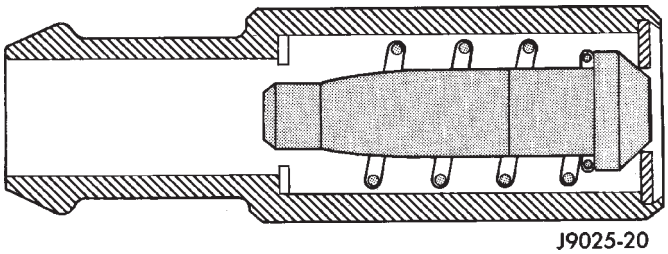

Fig. 4 Engine Off or Engine Pop-Back—No Vapor Flow

During periods of high manifold vacuum, such as idle or cruising speeds, vacuum is sufficient to completely compress spring. It will then pull the plunger to the top of the valve (Fig. 5). In this position there is minimal vapor flow through the valve.

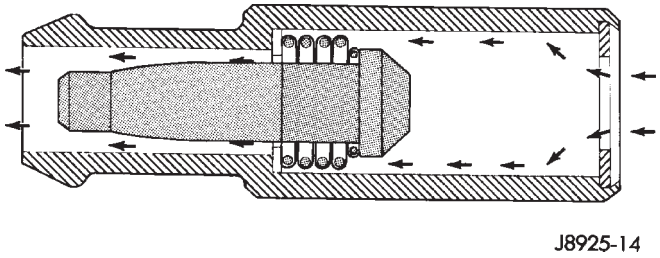

Fig. 5 High Intake Manifold Vacuum—Minimal Vapor Flow

During periods of moderate manifold vacuum, the plunger is only pulled part way back from inlet. This results in maximum vapor flow through the valve (Fig. 6).

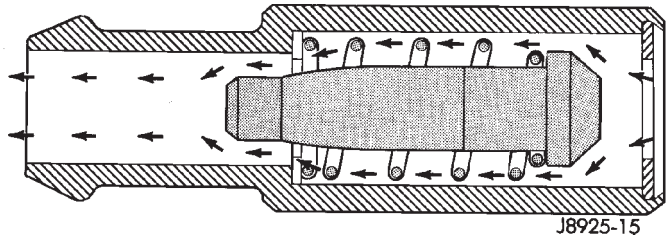

Fig. 6 Moderate Intake Manifold Vacuum—Maximum Vapor Flow

SPECIFICATIONS

TORQUE EVAPORATION SYSTEM

DESCRIPTION	N-m	Ft. Lbs.	In. Lbs.
Crankcase Breathers	12		106
EVAP Canister Mounting Bolts	11		100
EVAP Canister Purge Solenoid Mounting Nuts	9		80
LDP Pump Bracket Bolts	2		20

CCV HOSE

DIAGNOSIS AND TESTING - CCV SYSTEM - 4.0L

Before attempting diagnosis, be sure locations of fixed orifice fitting and air inlet fitting (Fig. 7) have not been inadvertently exchanged. The fixed orifice fitting is light grey in color and is located at **rear** of valve cover. The air inlet fitting is black in color and is located at **front** of valve cover.

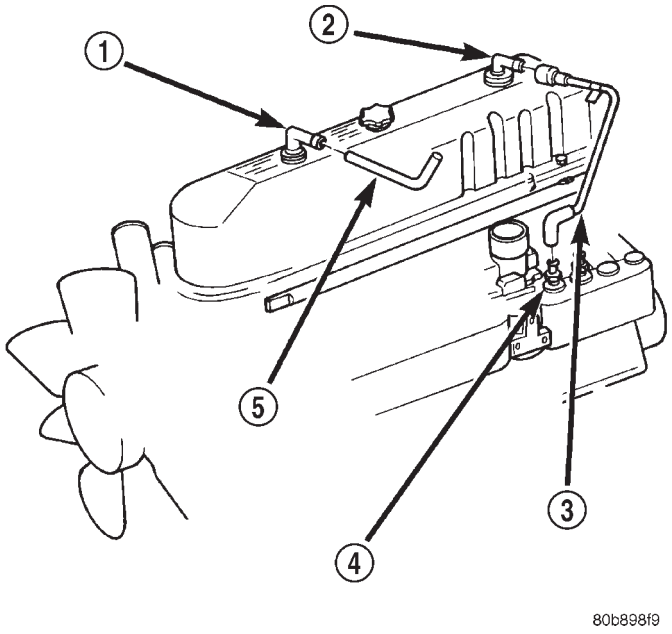

Fig. 7 Fixed Orifice Fitting and CCV System—4.0L Engine

1 - AIR INLET FITTING
2 - FIXED ORIFICE FITTING
3 - CCV BREATHER TUBE (REAR)
4 - INT. MAN. FITTING
5 - CCV BREATHER TUBE (FRONT)

(1) Pull fixed orifice fitting (Fig. 7) from valve cover and leave tube attached.

(2) Start engine and bring to idle speed.

(3) If fitting is not plugged, a hissing noise will be heard as air passes through fitting orifice. Also, a strong vacuum should be felt with a finger placed at fitting inlet.

(4) If vacuum is not present, remove fitting orifice fitting from tube. Start engine. If vacuum can now be felt, replace fixed orifice fitting. Do not attempt to clean plastic fitting.

(5) If vacuum is still not felt at hose, check line/hose for kinks or for obstruction. If necessary, clean out intake manifold fitting at intake manifold. Do this by turning a 1/4 inch drill (by hand) through the fitting to dislodge any solid particles. Blow out the fitting with shop air. If necessary, use a smaller drill to avoid removing any metal from the fitting.

(6) Return fixed orifice fitting to valve cover and leave tube attached.

(7) Disconnect air inlet fitting and its attached hose at front of valve cover (Fig. 7). Start engine and bring to idle speed. Hold a piece of stiff paper (such as a parts tag) loosely over the rubber grommet (opening) of the disconnected air inlet fitting.

(8) The paper should be drawn against the rubber grommet with noticeable force. This will be after allowing approximately one minute for crankcase pressure to reduce.

(9) If vacuum is not present, check breather hoses/tubes/lines for obstructions or restrictions.

(10) After testing, reconnect all system hoses/tubes/lines.

REMOVAL - FIXED ORIFICE FITTING

When installing fixed orifice fitting, be sure locations of fixed orifice fitting and air inlet fitting (Fig. 8) have not been inadvertently exchanged. The fixed orifice fitting is light grey in color and is located at **rear** of valve cover. The air inlet fitting is black in color and is located at **front** of valve cover.

(1) Pull fixed orifice fitting (Fig. 8) from valve cover grommet.

(2) Separate fitting from CCV breather tube.

CCV HOSE (Continued)

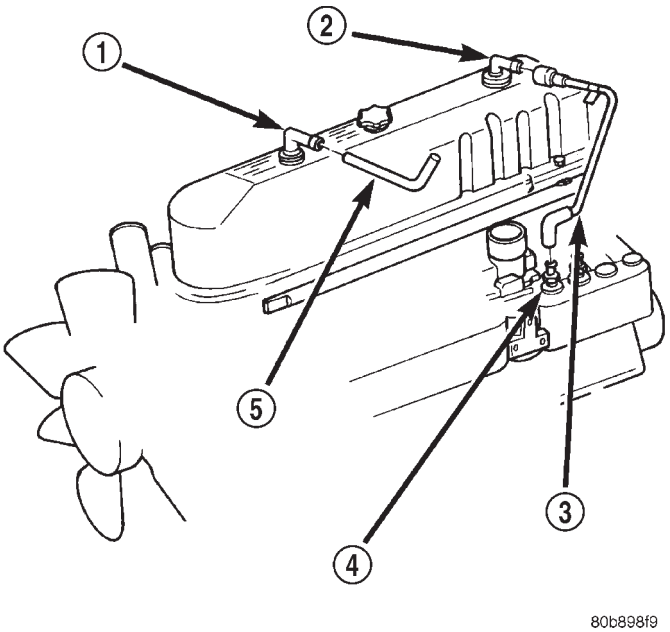

Fig. 8 FIXED ORIFICE FITTING - 4.0L

1 - AIR INLET FITTING
2 - FIXED ORIFICE FITTING
3 - CCV BREATHER TUBE (REAR)
4 - INT. MAN. FITTING
5 - CCV BREATHER TUBE (FRONT)

INSTALLATION - FIXED ORIFICE FITTING

When installing fixed orifice fitting, be sure locations of fixed orifice fitting and air inlet fitting (Fig. 8) have not been inadvertently exchanged. The fixed orifice fitting is light grey in color and is located at **rear** of valve cover. The air inlet fitting is black in color and is located at **front** of valve cover.

(1) Connect fitting to CCV breather tube.

(2) Return fixed orifice fitting to valve cover grommet.

EVAP/PURGE SOLENOID

DESCRIPTION

The duty cycle EVAP canister purge solenoid (DCP) regulates the rate of vapor flow from the EVAP canister to the intake manifold. The Powertrain Control Module (PCM) operates the solenoid.

During the cold start warm-up period and the hot start time delay, the PCM does not energize the solenoid. When de-energized, no vapors are purged. The PCM de-energizes the solenoid during open loop operation.

The engine enters closed loop operation after it reaches a specified temperature and the time delay ends. During closed loop operation, the PCM cycles (energizes and de-energizes) the solenoid 5 or 10 times per second, depending upon operating conditions. The PCM varies the vapor flow rate by changing solenoid pulse width. Pulse width is the amount of time that the solenoid is energized. The PCM adjusts solenoid pulse width based on engine operating condition.

REMOVAL

The duty cycle evaporative (EVAP) canister purge solenoid is located in the engine compartment in front of the EVAP canister (Fig. 15).

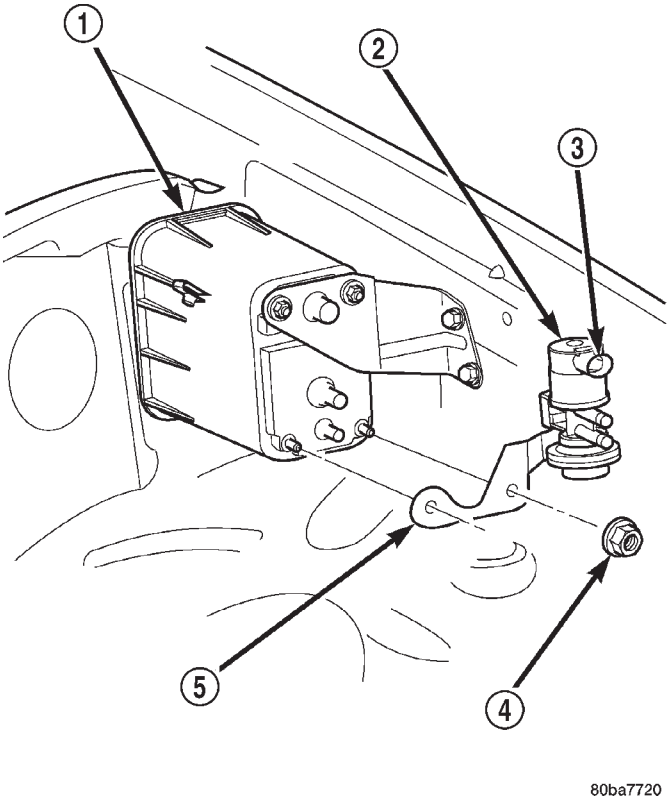

Fig. 9 EVAP Canister Purge Solenoid Removal/ Installation

1 - EVAP CANISTER
2 - EVAP CANISTER PURGE SOLENOID
3 - ELECTRIC CONNECTOR
4 - MOUNTING BRACKET NUTS (2)
5 - SOLENOID BRACKET

(1) Disconnect electrical connector at solenoid.

(2) Disconnect vacuum lines at solenoid.

(3) Remove two bracket mounting nuts (Fig. 9) and remove solenoid/solenoid bracket.

INSTALLATION

(1) Position solenoid/solenoid bracket to vehicle.

(2) Install and tighten 2 bracket mounting nuts to 9 N·m (80 in. lbs.) torque.

(3) Connect vacuum lines to solenoid. Be sure vacuum lines are firmly connected and not leaking or

EVAP/PURGE SOLENOID (Continued)

damaged. If leaking, a Diagnostic Trouble Code (DTC) may be set with certain emission packages.

(4) Connect electrical connector to solenoid.

FUEL FILLER CAP

DESCRIPTION

The plastic fuel tank filler tube cap is threaded onto the end of the fuel fill tube. Certain models are equipped with a 1/4 turn cap.

OPERATION

The loss of any fuel or vapor out of fuel filler tube is prevented by the use of a pressure-vacuum fuel fill cap. Relief valves inside the cap will release fuel tank pressure at predetermined pressures. Fuel tank vacuum will also be released at predetermined values. This cap must be replaced by a similar unit if replacement is necessary. This is in order for the system to remain effective.

CAUTION: Remove fill cap before servicing any fuel system component to relieve tank pressure. If equipped with a California emissions package and a Leak Detection Pump (LDP), the cap must be tightened securely. If cap is left loose, a Diagnostic Trouble Code (DTC) may be set.

REMOVAL

If replacement of the 1/4 turn fuel tank filler tube cap is necessary, it must be replaced with an identical cap to be sure of correct system operation.

CAUTION: Remove the fuel tank filler tube cap to relieve fuel tank pressure. The cap must be removed prior to disconnecting any fuel system component or before draining the fuel tank.

LEAK DETECTION PUMP

DESCRIPTION

The Leak Detection Pump (LDP) is used only with certain emission packages.

The LDP is a device used to detect a leak in the evaporative system.

The pump contains a 3 port solenoid, a pump that contains a switch, a spring loaded canister vent valve seal, 2 check valves and a spring/diaphragm.

Immediately after a cold start, engine temperature between 40°F and 86°F, the 3 port solenoid is briefly energized. This initializes the pump by drawing air into the pump cavity and also closes the vent seal. During non-test test conditions, the vent seal is held open by the pump diaphragm assembly which pushes it open at the full travel position. The vent seal will remain closed while the pump is cycling. This is due to the operation of the 3 port solenoid which prevents the diaphragm assembly from reaching full travel. After the brief initialization period, the solenoid is de-energized, allowing atmospheric pressure to enter the pump cavity. This permits the spring to drive the diaphragm which forces air out of the pump cavity and into the vent system. When the solenoid is energized and de-energized, the cycle is repeated creating flow in typical diaphragm pump fashion. The pump is controlled in 2 modes:

PUMP MODE: The pump is cycled at a fixed rate to achieve a rapid pressure build in order to shorten the overall test time.

TEST MODE: The solenoid is energized with a fixed duration pulse. Subsequent fixed pulses occur when the diaphragm reaches the switch closure point.

The spring in the pump is set so that the system will achieve an equalized pressure of about 7.5 inches of water.

When the pump starts, the cycle rate is quite high. As the system becomes pressurized pump rate drops. If there is no leak the pump will quit. If there is a leak, the test is terminated at the end of the test mode.

If there is no leak, the purge monitor is run. If the cycle rate increases due to the flow through the purge system, the test is passed and the diagnostic is complete.

The canister vent valve will unseal the system after completion of the test sequence as the pump diaphragm assembly moves to the full travel position.

A typical system schematic is shown in (Fig. 10).

LEAK DETECTION PUMP (Continued)

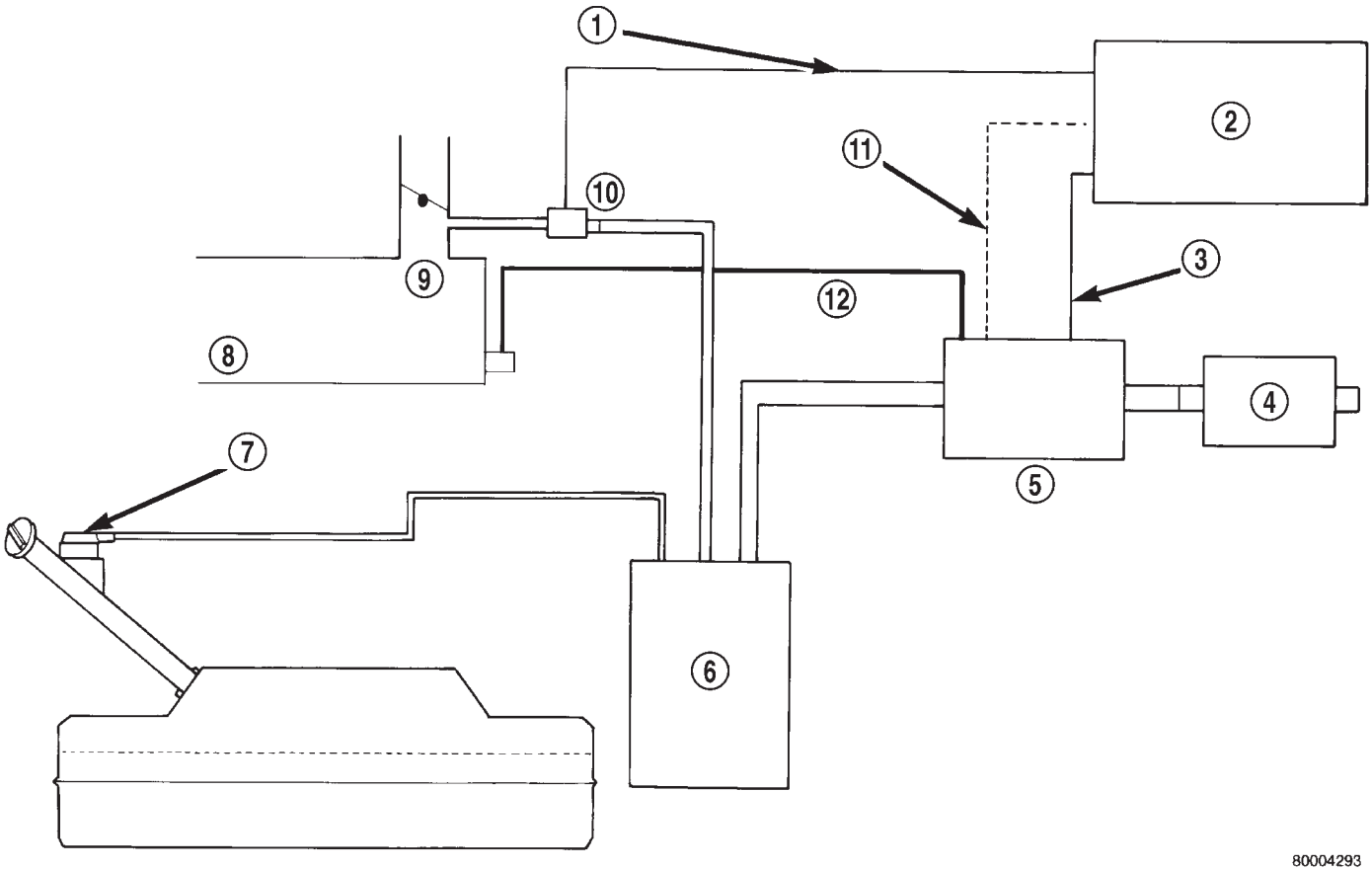

Fig. 10 Evaporative System Monitor Schematic—Typical

1 - DUTY CYCLE PURGE SOLENOID (DCPS) DRIVER
2 - POWERTRAIN CONTROL MODULE (PCM)
3 - 3-PORT SOLENOID DRIVER
4 - REMOTE FILTER
5 - COMBINED CANISTER VENT VALVE & LEAK DETECTION PUMP
6 - CANISTER
7 - TANK ROLLOVER VALVE & VAPOR FLOW CONTROL ORIFICE
8 - INTAKE MANIFOLD
9 - THROTTLE BODY
10 - DCPS
11 - SWITCH SIGNAL INPUT TO THE PCM
12 - ENGINE VACUUM LINE

LEAK DETECTION PUMP (Continued)

REMOVAL

The LDP is located in the left/front corner of engine compartment below air cleaner housing (Fig. 11). It is mounted to left/front inner fender sheet metal. The LDP and LDP filter are replaced (serviced) as one unit.

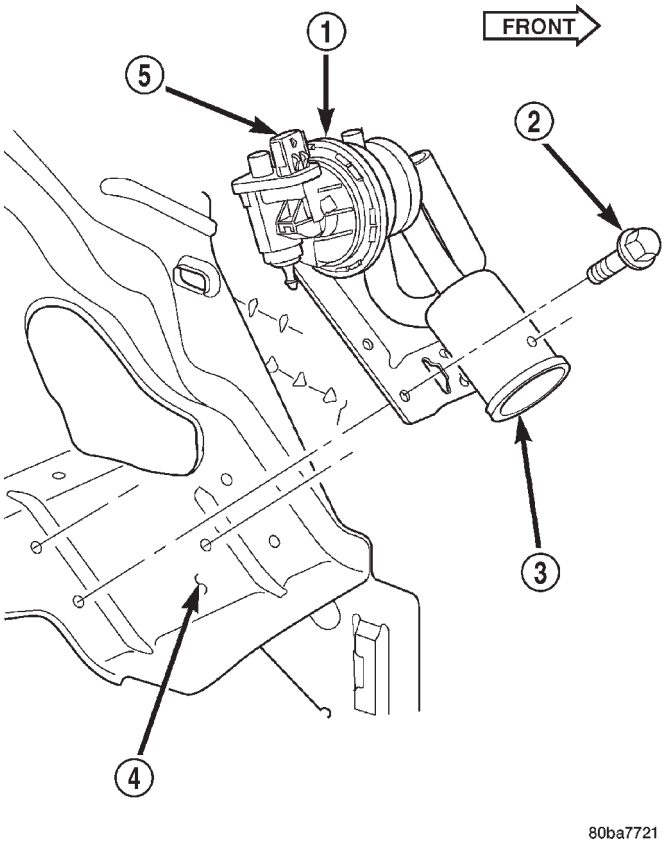

Fig. 11 Leak Detection Pump (LDP) Removal/ Installation

1 - LEAK DETECTION PUMP (LDP)
2 - MOUNTING BOLTS (3)
3 - LDP FILTER
4 - LEFT/FRONT INNER FENDER
5 - ELEC. CONN.

(1) Remove air cleaner housing. Refer to Air Cleaner Housing/Resonator/Ducts Removal/Installation.
(2) Disconnect electrical connector at LDP.
(3) Carefully remove vapor/vacuum lines at LDP.
(4) Remove 3 LDP mounting bolts (Fig. 11).
(5) Remove LDP from inner fender.

INSTALLATION

The LDP is located in the left/front corner of engine compartment below air cleaner housing (Fig. 11). It is mounted to left/front inner fender sheet metal. The LDP and LDP filter are replaced (serviced) as one unit.

(1) Install LDP assembly to inner fender. Install 3 bolts and tighten to 2 N·m (20 in. lbs.) torque.
(2) Carefully install vapor/vacuum lines to LDP and LDP filter. **The vapor/vacuum lines and hoses must be firmly connected. Check the vapor/vacuum lines at the LDP, LDP filter and EVAP canister purge solenoid for damage or leaks. If a leak is present, a Diagnostic Trouble Code (DTC) may be set.**
(3) Connect electrical connector to LDP.
(4) Install air cleaner housing. Refer to Air Cleaner Housing/Resonator/Ducts Removal/Installation.

PCV VALVE

DIAGNOSIS AND TESTING - PCV VALVE/PCV SYSTEM - 4.7L

(1) Disconnect PCV line/hose (Fig. 12) by disconnecting rubber connecting hose at PCV valve fitting.
(2) Remove PCV valve at oil filler tube by rotating PCV valve downward until locating tabs have been freed at cam lock (Fig. 12). After tabs have cleared, pull valve straight out from filler tube. **To prevent damage to PCV valve locating tabs, valve must be pointed downward for removal. Do not force valve from oil filler tube.**
(3) After valve is removed, check condition of valve o-ring (Fig. 12). Also, PCV valve should rattle when shaken.
(4) Reconnect PCV valve to its connecting line/hose.
(5) Start engine and bring to idle speed.
(6) If valve is not plugged, a hissing noise will be heard as air passes through valve. Also, a strong vacuum should be felt with a finger placed at valve inlet.
(7) If vacuum is not felt at valve inlet, check line/hose for kinks or for obstruction. If necessary, clean out intake manifold fitting at rear of manifold. Do this by turning a 1/4 inch drill (by hand) through the fitting to dislodge any solid particles. Blow out the fitting with shop air. If necessary, use a smaller drill to avoid removing any metal from the fitting.
(8) **Do not attempt to clean the old PCV valve.**
(9) Return PCV valve back to oil filler tube by placing valve locating tabs (Fig. 12) into cam lock. Press PCV valve in and rotate valve upward. A slight click will be felt when tabs have engaged cam lock. Valve should be pointed towards rear of vehicle.
(10) Connect PCV line/hose and connecting rubber hose to PCV valve.
(11) Disconnect rubber hose from fresh air fitting at left side of air cleaner resonator box (Fig. 13). Start engine and bring to idle speed. Hold a piece of

PCV VALVE (Continued)

stiff paper (such as a parts tag) loosely over the opening of the disconnected rubber hose.

(12) The paper should be drawn against the hose opening with noticeable force. This will be after allowing approximately one minute for crankcase pressure to reduce.

(13) If vacuum is not present, disconnect each PCV system hose at top of each breather (Fig. 13). Check for obstructions or restrictions.

(14) If vacuum is still not present, remove each PCV system breather (Fig. 13) from each cylinder head. Check for obstructions or restrictions. If plugged, replace breather. Tighten breather to 12 N·m (106 in. lbs.) torque. Do not attempt to clean breather

(15) If vacuum is still not present, disconnect each PCV system hose at each fitting and check for obstructions or restrictions.

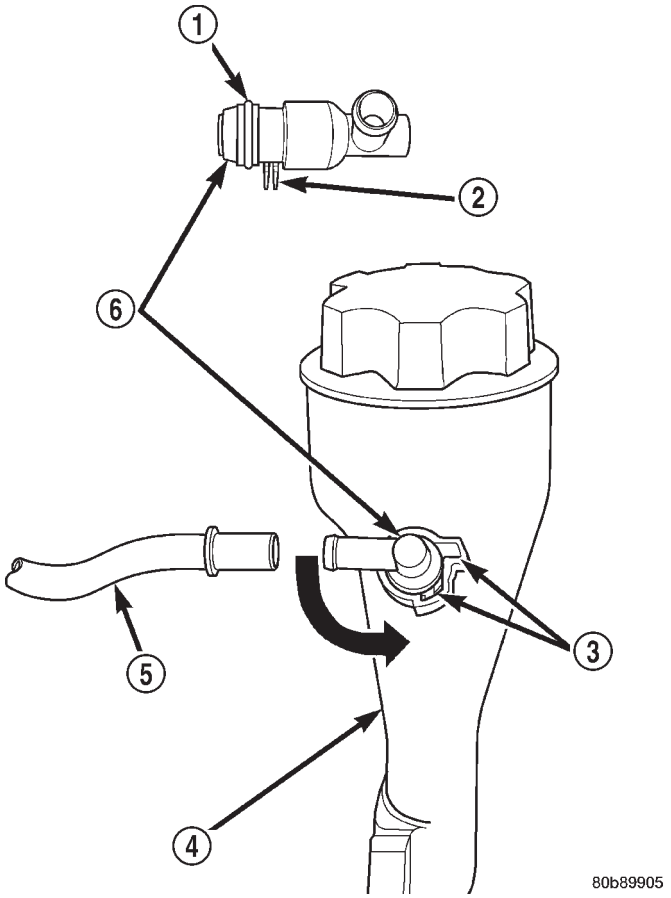

Fig. 12 PCV Valve/Oil Filler Tube—4.7L V-8 Engine

1 - O-RING
2 - LOCATING TABS
3 - CAM LOCK
4 - OIL FILLER TUBE
5 - PCV LINE/HOSE
6 - PCV VALVE

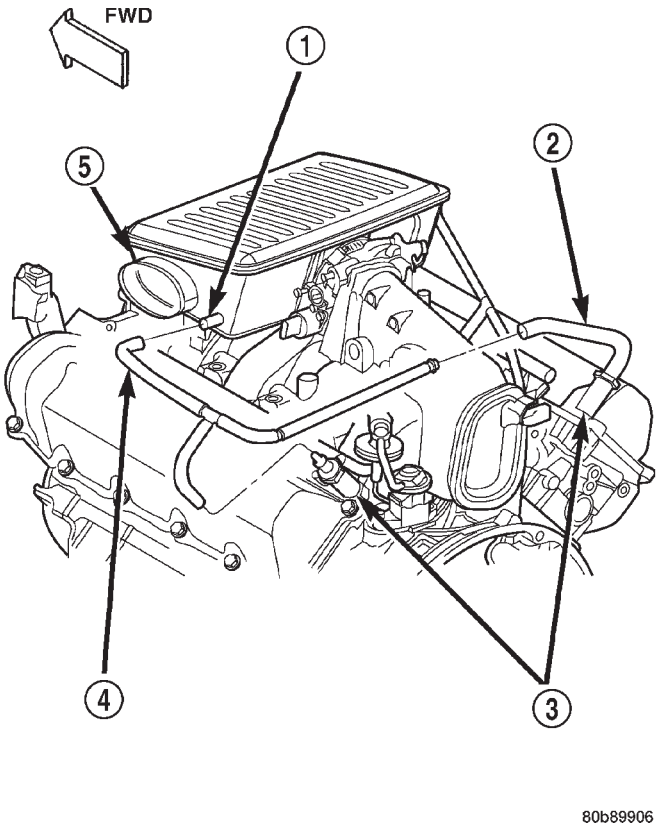

Fig. 13 PCV Breathers/Tubes/Hoses—4.7L V-8 Engine

1 - FRESH AIR FITTING
2 - CONNECTING TUBES/HOSES
3 - CRANKCASE BREATHERS (2)
4 - RUBBER HOSE
5 - AIR CLEANER RESONATOR

REMOVAL - PCV VALVE - 4.7L

The PCV valve is located on the oil filler tube (Fig. 14). Two locating tabs are located on the side of the valve (Fig. 14). These 2 tabs fit into a cam lock in the oil filler tube. An o-ring seals the valve to the filler tube.

(1) Disconnect PCV line/hose (Fig. 14) by disconnecting rubber hose at PCV valve fitting.

(2) Remove PCV valve at oil filler tube by rotating PCV valve downward (counter-clockwise) until locating tabs have been freed at cam lock (Fig. 14). After tabs have cleared, pull valve straight out from filler tube. **To prevent damage to PCV valve locating tabs, valve must be pointed downward for removal. Do not force valve from oil filler tube.**

(3) After valve is removed, check condition of valve o-ring (Fig. 14).

PCV VALVE (Continued)

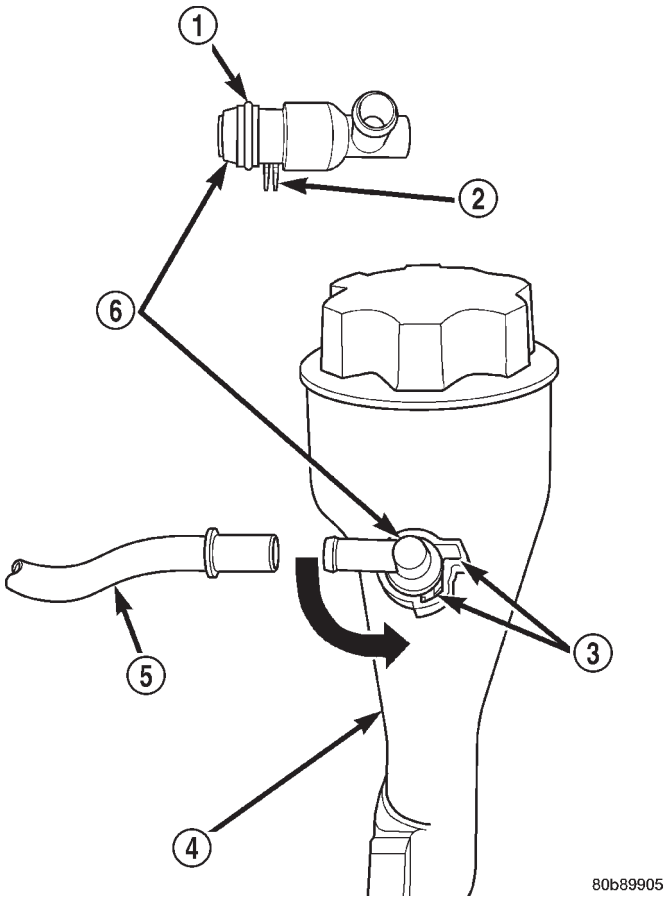

Fig. 14 PCV Valve/Oil Filler Tube Location

1 - O-RING
2 - LOCATING TABS
3 - CAM LOCK
4 - OIL FILLER TUBE
5 - PCV LINE/HOSE
6 - PCV VALVE

INSTALLATION - PCV VALVE - 4.7L

The PCV valve is located on the oil filler tube (Fig. 14). Two locating tabs are located on the side of the valve (Fig. 14). These 2 tabs fit into a cam lock in the oil filler tube. An o-ring seals the valve to the filler tube.

(1) Return PCV valve back to oil filler tube by placing valve locating tabs (Fig. 14) into cam lock. Press PCV valve in and rotate valve upward. A slight click will be felt when tabs have engaged cam lock. Valve should be pointed towards rear of vehicle.

(2) Connect PCV line/hose and rubber hose to PCV valve.

VACUUM LINES

DIAGNOSIS AND TESTING - VACUUM LINES

A vacuum line schematic for emission related items can be found on the Vehicle Emission Control Information (VECI) label. For label location, refer to Vehicle Emission Control Information (VECI) Label.

VAPOR CANISTER

DESCRIPTION

A maintenance free, EVAP canister is used on all vehicles. The EVAP canister is filled with granules of an activated carbon mixture. Fuel vapors entering the EVAP canister are absorbed by the charcoal granules.

Fuel tank pressure vents into the EVAP canister. Fuel vapors are temporarily held in the canister until they can be drawn into the intake manifold. The duty cycle EVAP canister purge solenoid allows the EVAP canister to be purged at predetermined times and at certain engine operating conditions.

REMOVAL

The EVAP canister is located in the engine compartment near the brake power booster (Fig. 15).

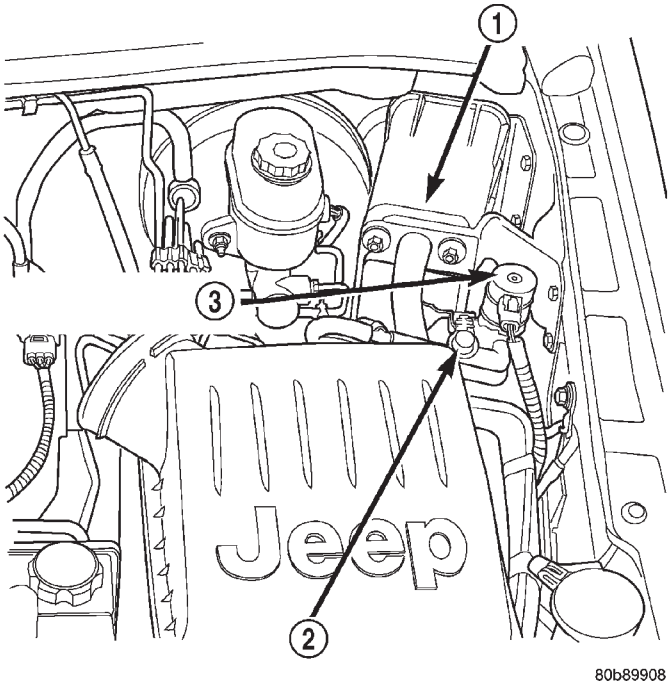

Fig. 15 EVAP Canister, EVAP Solenoid, LDP Test Port Locations

1 - EVAP CANISTER
2 - LDP TEST PORT
3 - EVAP CANISTER PURGE SOLENOID

VAPOR CANISTER (Continued)

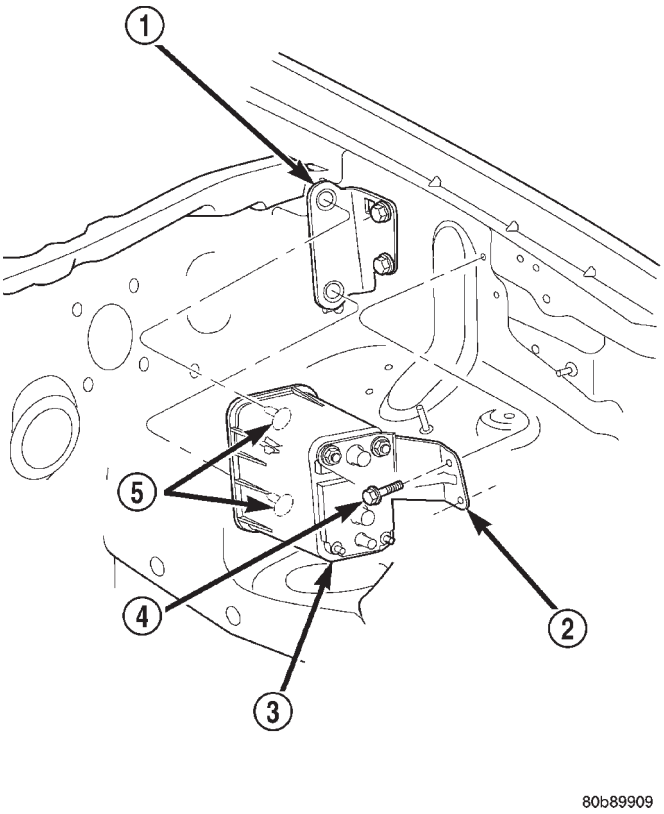

Fig. 16 EVAP Canister Removal/Installation

1 - REAR BRACKET
2 - FRONT BRACKET
3 - EVAP CANISTER
4 - CANISTER MOUNTING BOLTS
5 - ALIGNMENT PINS

(1) Remove duty cycle EVAP canister purge solenoid and its mounting bracket at front of EVAP canister (2 nuts).

(2) Disconnect vacuum lines at EVAP canister.

(3) Remove 2 canister mounting bolts at front mounting bracket (Fig. 16).

(4) Remove canister from rear mounting bracket (2 pins are used (Fig. 16) to align canister to rear bracket)

INSTALLATION

(1) Position canister to body. Guide pins into rear bracket.

(2) Install canister mounting bolts. Tighten bolts to 11 N·m (100 in. lbs.) torque.

(3) Connect vacuum lines. Be sure vacuum lines are firmly connected and not leaking or damaged. If leaking, a Diagnostic Trouble Code (DTC) may be set with certain emission packages.

(4) Install duty cycle EVAP canister purge solenoid and its mounting bracket to front of EVAP canister (2 nuts). Tighten nuts to 9 N·m (80 in. lbs.) torque.

NEW VEHICLE PREPARATION

TABLE OF CONTENTS

	page
INTRODUCTION	
DESCRIPTION	1
RECEIVING	
INSPECTION	3
UNDER HOOD	
INSPECTION	3
UNDER VEHICLE	
INSPECTION	7
INSTALLATION	7
EXTERIOR	
INSPECTION	8
BODY INTERIOR	
INSPECTION	9
INSTALLATION	11
ROAD TEST	
DESCRIPTION	11
INSPECTION	12
PRE DELIVERY STORAGE	
DESCRIPTION	14
STANDARD PROCEDURE	15
PRE DELIVERY STORAGE	15
PROGRAMMABLE ELECTRONIC FEATURES	
DESCRIPTION	15
OPERATION	15
APPEARANCE TIPS	
CLEANING	16
FINAL STEPS	
STANDARD PROCEDURE	17
NEW VEHICLE PREPARATION FORM	17
OWNER CHECK OUT	17
INSPECTION	17

INTRODUCTION

DESCRIPTION - THE IMPORTANCE OF CAREFUL NEW VEHICLE PREPARATION

Today, the automobile industry is more competitive than it has been for decades. Automakers around the world, including DaimlerChrysler, have made tremendous improvements in the quality of their vehicles.

As a result, customer expectations have also risen. Today's customers are more particular about their vehicles than ever before. The result is that problems once regarded as insignificant (such as a squeak or rattle) can now make the difference between a repeat customer and one who never purchases another vehicle from you dealership or another DaimlerChrysler Corporation product.

As a technician preparing a new car or truck for delivery, you are the final step in the entire quality process. Your inspection is the final opportunity to detect any flaws that would disappoint the customer. Your efforts will reflect upon the thousands of men and women who design, engineer and build DaimlerChrysler products as well as upon your dealership and on yourself as a competent, conscientious technician.

As manufacturing quality has improved, prep procedures have come to serve as additional quality checks. However, there are several compelling reasons for careful new vehicle preparation.

- Safety-You assure the customer that his or her new vehicle meets all federal safety standards.
- Emissions Controls-When your customers are assured that their new cars meet emissions standards, they will know that they are contributing to cleaner air and helping control pollution.
- Customer Satisfaction-First impressions are very important on a new vehicle. Careful new vehicle preparation will impress your customer.
- Competition-It is common knowledge in the industry that the availability of efficient service is one of the decisive factors in determining which cars will sell. A vehicle delivered to your customers in first class condition, inside and out, will bring them back to the dealership for the kind of service you have led them to expect and for their next new car.

This information outlines service procedures which will ensure that DaimlerChrysler Corporation vehicles are ready for delivery to the customer when they are complete. These procedures follow a logical order, from a careful underhood inspection, to the moment when you complete the warranty certificate and turn the keys over to your customer.

When you have completed the procedures described in this information, both you and your customer will be assured that his or her new vehicle will perform as expected.

USING THE MANUAL

This guide to new vehicle preparation covers all items on the New Vehicle Preparation Form (Fig. 1).

INTRODUCTION (Continued)

DAIMLERCHRYSLER

NEW VEHICLE PREPARATION

Inspection and Road Test ■ Passenger Cars and Trucks

REPAIR ORDER NUMBER	DEALER STOCK NUMBER	KEY CODES	MAKE & YEAR	MODEL	DATE PERFORMED	TECHNICIAN NUMBER

VEHICLE IDENTIFICATION NUMBER	MILEAGE (EXCLUDING 10TH)	CUSTOMER NAME	XXXXX

PERFORM THE INSPECTION AND ADJUSTMENTS AS LISTED BELOW

NOTE: Refer To The New Vehicle Preparation Manual For Proper Preparation Procedures. Refer To The Appropriate Service Manual For Specifications And Service Procedures. Conditions Which Can Be Corrected By The Minor Adjustments Specified Below Are Considered Part Of Normal New Vehicle Preparation. Items That Require Correction Beyond The Minor Adjustments Specified Are Eligible For Warranty Reimbursement.

A. UNDER HOOD

1. **Hood Latch/Safety Catch (Adjust As Required)**
   - ☐ Check For Proper Operation
2. **Fluid Levels (Check For Proper Level And Top Off As Required)**
   - ☐ Engine Oil
   - ☐ Automatic Transmission
   - ☐ Clutch Master Cylinder
   - ☐ Brake Master Cylinder
   - ☐ Power Steering
   - ☐ Windshield Washer
   - ☐ Rear Washer
   - ☐ Cooling System
3. **Lines/Hoses (Check Clearance From Moving And Hot Objects; Reroute And Tighten As Required)**
   - ☐ Brake Lines
   - ☐ Fuel Lines
   - ☐ Power Steering Hoses
   - ☐ Vacuum Hoses
   - ☐ Coolant Hoses
   - ☐ Clutch Lines
   - ☐ Refrigerant Lines
4. **Battery (Check State Of Charge)**
   - ☐ Inspect Battery Test Indicator When Easily Visible (Recharge To Assure "Green Dot"); Use Voltmeter When Indicator Is Not Visible (Min. 12.4V)
5. **Wiring (Check Routing And Connections; Reroute And Connect As Required)**
   - ☐ Starter, Generator, A/C Clutch And Ignition, Secondary Wires Installed Correctly
   - ☐ Connect Ignition Off Draw (I.O.D.), Or Install Fuse On Applicable Vehicles
   - ☐ Other _____

B. UNDER VEHICLE

1. **Visually Inspect For Loose Attachments, Proper Keying, Leakage, Clearance & Routing**
   - ☐ Engine
   - ☐ Oil Cooler
   - ☐ Cooling System
   - ☐ Transmission
   - ☐ Driveshaft Boots
   - ☐ Differential
   - ☐ Transmission Cooler
   - ☐ Brake System
   - ☐ Fuel System
   - ☐ Exhaust System
   - ☐ Steering And Suspension Components
   - ☐ Other _____
2. **Tire Pressures (Adjust To Specifications)**
   - ☐ Check All Tire Pressures, Including Spare Tire
3. **Tie-Down Brackets**
   - ☐ Remove Where Applicable

C. BODY - EXTERIOR

1. **Operation Of Doors & Locks (Adjust Strikers & Latches As Required)**
   - ☐ All Exterior Door Locks Work Easily With All Keys
   - ☐ All Doors Open/Close Easily (With All Windows Up)
   - ☐ Keyless Entry System Works Properly (Both Transmitters)
   - ☐ Security Alarm Works Properly
   - ☐ Deck Lid/Tailgate/Liftgate Operates Easily
2. **Fit & Finish (Visually Inspect; Touch Up As Required)**
   - ☐ Remove Protective Coatings/Covers
   - ☐ Free From Paint Chips, Scratches, Sags, Runs, Dirt Or Corrosion
   - ☐ Paint Colors Match On All Panels
   - ☐ Moldings/Stripes Are Aligned Properly
   - ☐ Moldings/Stripes Are All Present And Securely Fastened
   - ☐ Door Panels Have Even Gaps And Fit Well With Adjacent Panels
   - ☐ Deck Lid/Liftgate/Tailgate Has Even Gaps And Fit Well With Adjacent Panels
   - ☐ Hood Panel Has Even Gaps And Fits Well With Adjacent Panels
   - ☐ Body Free From Dents And Dings
   - ☐ Other _____
3. **Body Sealing (Visually Inspect)**
   - ☐ Door And Window Seals
   - ☐ Windshield
   - ☐ Backlight
   - ☐ Deck Lid/Liftgate/Tailgate
   - ☐ Sunroof/Convertible Top
   - ☐ Check For Water Leaks During Normal Recommended Wash
   - ☐ Other _____ _____
4. **Convertible Top (Cycle Top)**
   - ☐ Check And Adjust Alignment Pins As Required

D. BODY - INTERIOR

1. **Windows, Doors & Locks (Check Operation)**
   - ☐ All Manual Windows Open/Close Easily
   - ☐ All Power Windows Operate Correctly
   - ☐ All Power/Manual Door Locks Operate Correctly
   - ☐ All Doors Open/Close Easily
   - ☐ Remote Deck Lid/Liftgate/Tailgate Release (If Equipped)
   - ☐ Glove Box Door Opens/Closes Easily
   - ☐ Console Door Opens/Closes Easily
   - ☐ Sunroof Opens/Closes Easily
   - ☐ Other _____
2. **Seats (Check Operation)**
   - ☐ Manual/Power Seat Adjustments Work Properly For All Seats
   - ☐ Securely Located In Track
   - ☐ Check Heated Seat Operation
3. **Seat And Shoulder Belts, Retractors And Head Restraints (Check Operation)**
   - ☐ Check All Seat And Shoulder Belts, Including Retractors, For Proper Latching And Ease Of Operation
   - ☐ Check All Head Restraints For Ease Of Operation
   - ☐ Child Seats
4. **Lights/Switches (Check Operation)**
   - ☐ Check All Interior Lights And Switches (Visually Inspect And Operate)
   - ☐ Check All Exterior Lights And Switches (Visually Inspect And Operate)
   - ☐ Check Ignition Switch For Proper Operation
5. **Fit & Finish (Visually Inspect)**
   - ☐ Remove Interior Covers
   - ☐ Instrument Panel, Glove Box Door And Interior Moldings Have Even Gaps
   - ☐ Door Panel Material Is Clean, Free From Wrinkles And Installed Correctly
   - ☐ Seat Material Is Clean, Secure And Free Of Wrinkles
   - ☐ Carpet Is Clean, Secure And Free Of Wrinkles
   - ☐ Other _____
6. **Compass**
   - ☐ Calibrate & Set Variance
7. **"Shipped Loose"**
   - ☐ Install Any Items

E. ROAD TEST

1. **Neutral Safety Switch**
   - ☐ Check For Proper Operation
2. **Shift/Clutch Interlock System**
   - ☐ Check For Proper Operation
3. **Gauges/Warning Lights**
   - ☐ Check Operation Of All Gauges
   - ☐ Check Operation Of All Warning Lights
4. **Horn (Check Operation)**
   - ☐ Check For Proper Sound Quality
5. **Turn & Emergency Signals (Check Operation)**
   - ☐ Ease Of Operation And Proper Cancelling
6. **Mirrors (Check Operation)**
   - ☐ Check Day/Night Function (If Equipped)
   - ☐ Ease Of Adjustment (Power Or Manual)
7. **Windshield Wipers & Washers (Check Operation)**
   - ☐ Check Washer Pattern (Adjust As Necessary)
   - ☐ Check Intermittent Wipe Feature
   - ☐ Check For Proper Wiping Pattern
8. **Heater/Air Conditioner (Check Operation)**
   - ☐ Heater/Defroster Works Properly
   - ☐ Turn On Rear Defroster During Drive, Then Feel Window For Warmth After Drive
   - ☐ A/C Cools Properly
   - ☐ Fan Operation Is Quiet
9. **Radio (Check Operation)**
   - ☐ Good AM/FM Reception
   - ☐ Cassette/CD Works Properly
   - ☐ Good Sound Quality
   - ☐ Displays Correct Time
10. **Trip Computer/Maintenance Reminder (Check Operation)**
    - ☐ Check That All Modes Operate
11. **Speed Control (Check Operation)**
    - ☐ Check On/Off Switch
    - ☐ Check "Set" Operation
    - ☐ Check "Resume"
    - ☐ Check "Accel/Decel"
    - ☐ Check Brake Release
12. **Service Brakes (Check Operation)**
    - ☐ Vehicle Stops In A Straight Line - No Pulling To One Side
    - ☐ Quiet Operation - Free From Noise
    - ☐ Free From Shudder Or Vibration
    - ☐ Check Brake Warning Light
13. **Parking Brake (Check Operation)**
    - ☐ Easy To Operate
    - ☐ Free From Drag
    - ☐ Able To Hold
    - ☐ Check Warning Light
14. **Engine Performance**
    - ☐ Starts Promptly
    - ☐ Free From Stalling
    - ☐ Idles Smoothly And At Proper Speed
    - ☐ Free From Stumbling Or Hesitation
    - ☐ Produces Sufficient Power
    - ☐ Free From Unusual Noises
    - ☐ Operates Within Proper Temperature Range
    - ☐ Stops When Key Is Shut Off
15. **Transmission/Transfer Case Performance**
    - ☐ Park Lock Holds Vehicle (Automatic)
    - ☐ Shifter (Manual) Or Shift Lever (Automatic) Operates Easily
    - ☐ Shifts Smoothly (Automatic)
    - ☐ Upshifts And Downshifts Properly (Automatic)
    - ☐ Proper Synchronization - Gears Do Not Grind (Manual)
    - ☐ Clutch Operates Smoothly (Manual)
    - ☐ Transfer Case Shifts Easily Among Ranges (4x4 Vehicles)
16. **Steering & Handling**
    - ☐ Power Assist Works Properly - Steering Does Not Require Excessive Effort
    - ☐ Steering Wheel Does Not Vibrate At Idle Or Road Speed
    - ☐ Steering Wheel Centered When Traveling Straight Ahead
    - ☐ Does Not Pull To One Side
    - ☐ Vehicle Does Not Vibrate
17. **Squeaks, Rattles And Wind Noise**
    - ☐ Instrument Panel, Glove Box, Seats, Steering Wheel And Column Are Free From Squeaks And Rattles
    - ☐ Windows And Doors Are Free From Squeaks, Rattles And Wind Noise
    - ☐ Vehicle Exterior Free From Squeaks, Rattles And Noise, Front And Rear
    - ☐ Interior Panels Free From Squeaks And Rattles
18. **Other** _____
19. **Fuel**
    - ☐ Fill Fuel Tank (Use Specified Grade)

F. PREDELIVERY STORAGE

- ☐ Always Unplug I.O.D. Connector, Or Pull Fuse That Activates Accessories.

G. PROGRAMMABLE ELECTRONIC FEATURES

Program Per Customer Request (If Equipped)

- ☐ Rolling Power Door Locks
- ☐ Horn Chirp When Doors Locked With RKE
- ☐ Low Fuel Chime
- ☐ RKE Door Unlock Sequence (One Push Unlocks All Doors)
- ☐ Headlights On Automatically With Wipers
- ☐ Remote Key Fobs Linked To Memory
- ☐ Headlamp Delay Variable Interval
- ☐ Easy Exit Driver's Seat
- ☐ Service Interval Reminder

FOLD HERE

FOLD HERE

EPA CERTIFICATION OF CONFORMITY

The selling Dealer hereby certifies that (1) this vehicle is covered by an EPA Certificate of Conformity indicating that it conforms to all applicable emission standards of the U.S. Environmental Protection Agency; (2) a visual inspection of this vehicle and engine has been conducted to assure that all emission-related components have been properly installed; (3) all emission-related preparation required by the manufacturer prior to the sale of this vehicle has been properly performed.

If this vehicle has been maintained and used in accordance with the applicable DaimlerChrysler Corporation instructions, and if the vehicle fails an EPA-approved emission test prior to the expiration of 3 months or 4,000 miles (whichever comes first), DaimlerChrysler Corporation through its authorized dealers, will remedy the nonconformity under the emission warranty.

DEALER CERTIFICATION

I CERTIFY THAT THIS VEHICLE HAS BEEN INSPECTED AND ROAD TESTED, AND THAT ADJUSTMENTS WERE PERFORMED, AS INDICATED BY THE CHECK MARKS IN THE BOXES.

_____
DEALER, SERVICE MANAGER OR TECHNICIAN SIGNATURE

☐ ☐ ZONE ☐ ☐ ☐ ☐ ☐ DEALER CODE

Form No. 84-320-4740 (Rev. 11/98)
00PM1702

1. CUSTOMER COPY

8090be12

Fig. 1 NEW VEHICLE PREPARATION FORM

INTRODUCTION (Continued)

Items found requiring adjustment and/or repair should be corrected before delivery of the vehicle.

NOTE: It is the dealer's responsibility to protect new vehicles from damage and deterioration prior to retail delivery both before and after new vehicle preparation.

The information includes the following features:

Inspection points are cross-referenced to the New Vehicle Preparation Form as follows:

- Titles indicate the general area being inspected or the types of checks being made (i.e., underhood, body-exterior, road test, etc.).
- Sub-Titles identify the types of items to be inspected in that area (i.e., lines/hoses, wiring, etc.).

Procedures follow a logical order to prevent duplication and wasted effort.

Tips to help you do a better job are found as **NOTES**.

RECEIVING

INSPECTION

The following procedures are recommended for your own protection upon receipt of new vehicles. When a new car is delivered by the carrier, it should be inspected to ensure that it is in good condition and to determine if there is any shortage or transportation damage.

EXTERIOR

Upon receipt of a new vehicle, check immediately for:

- Under carriage damage
- Chipped or cracked windshield, broken windows, and loose or missing moldings and name-plates
- Dents, scrapes, scratches, chips, dirt in paints or other damage to the body exterior
- Damaged or missing side view mirror(s)
- Missing wheel nuts
- Broken or missing lenses
- Chafing, bruises, cuts, or scrapes on tire sidewalls or tread
- Missing underhood items
- Missing fuel filler cap
- Shipped loose items-license plate bracket, spare tire, jack and tire wrench, radio antenna, floor mats, wheel covers, cargo nets, fuses and other items
- Ensure that IOD fuse is removed
- Check battery test indicator when easily visible, or use voltmeter (battery must be at 12.4 volts or greater). Charge to ensure green dot-visibility, permanent damage may occur if battery remains in a discharged state for any length of time.

INTERIOR

Check interior items such as:

- Rearview mirror
- Accessory control knobs
- Smokers package items
- Keys
- Radio
- Special equipment items listed on shipper
- Owner's Manual and Consumer information Brochures (normally stored in the glove box).
- Cuts, abrasions or stains on interior trim.

NOTE: Remember a careful look at new vehicles when they are received may prevent problems when preparing vehicles for delivery to your customers.

MAJOR INSPECTION POINTS

(1) Check operation of hood latch and safety catch-adjust as required.

(2) Check all fluids for proper level and top off with the proper fluid as required-engine oil, automatic transmission fluid, brake master cylinder, clutch master cylinder, power steering, windshield washer, and cooling system. (Vehicle must be at normal operating temperature for some of these checks.)

(3) Check brake, clutch, fuel, and power steering lines and hoses for leaks and clearance from moving and hot objects-reroute to the proper location and tighten as required.

(4) Check battery state of charge-recharge if necessary, to ensure green dot is visible or instrument panel voltmeter indicates 12.4 volts or greater.

(5) Check routing and connections of underhood wiring, vacuum hoses, refrigerant lines and coolant hoses for leaks, loose connections and clearance from moving objects reroute and tighten connections as required. Install IOD fuse on applicable vehicles.

NOTE: Reset radio, clock, compass, etc., after installing, if vehicle is being delivered.

UNDER HOOD

INSPECTION - HOOD LATCH/SAFETY CATCH

Check operation of hood latch and safety catch (Fig. 2) adjust as required.

NOTE: The safety catch prevents the hood from going to full open position until it is manually released. To test the safety catch, unlock the hood with the interior release, then try to raise the hood without operating the safety catch.

UNDER HOOD (Continued)

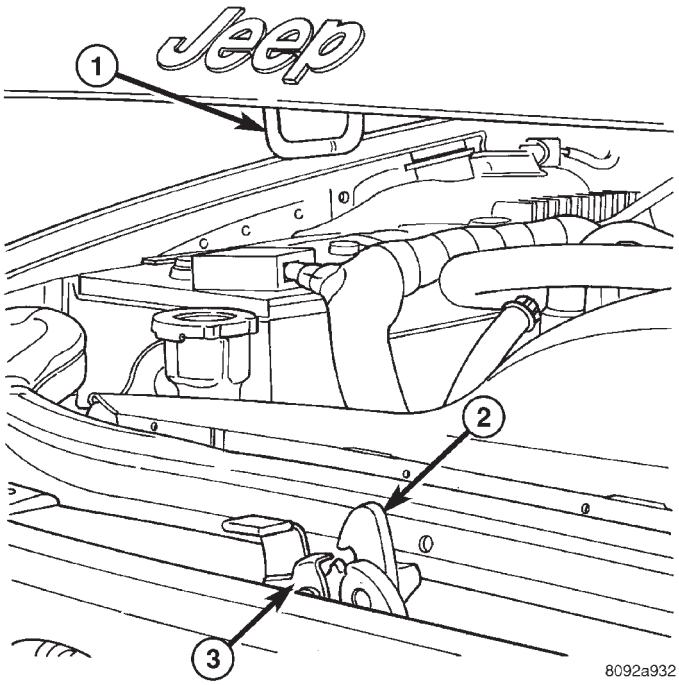

Fig. 2 HOOD LATCH AND SAFETY CATCH

1 - STRIKER
2 - SAFETY CATCH
3 - HOOD LATCH

INSPECTION - FLUID LEVELS

ENGINE OIL

CAUTION: Use only oil that meets the specified requirements.

NOTE: If oil level is low, inspect for oil leaks.

Check engine oil level. The oil should be in the safe range or between the minimum and maximum marks.

- If the oil level is at the minimum mark, add oil that meets specifications.
- The best time to check the oil is about 5 minutes after a fully warmed-up engine is turned off, or before starting the engine after it has been off overnight.
- For the most accurate readings, the vehicle should be on level ground.
- Wipe up any excess oil that may have spilled, or the customer could mistakenly perceive this as the result of a leak.

AUTOMATIC TRANSMISSION/TRANSAXLE

CAUTION: Only use fluid that meets the vehicle's specific requirement. Consult the service manual for information.

NOTE: Mopar ATF Plus contains special additives not found in Mercon and Dexron II fLuids. Use of fluid other than Mopar Plus (when specified) could result in an upshift shudder in some applications.

Transmission and transaxle fluid check procedures are specific to each vehicle line.

BRAKE MASTER CYLINDER

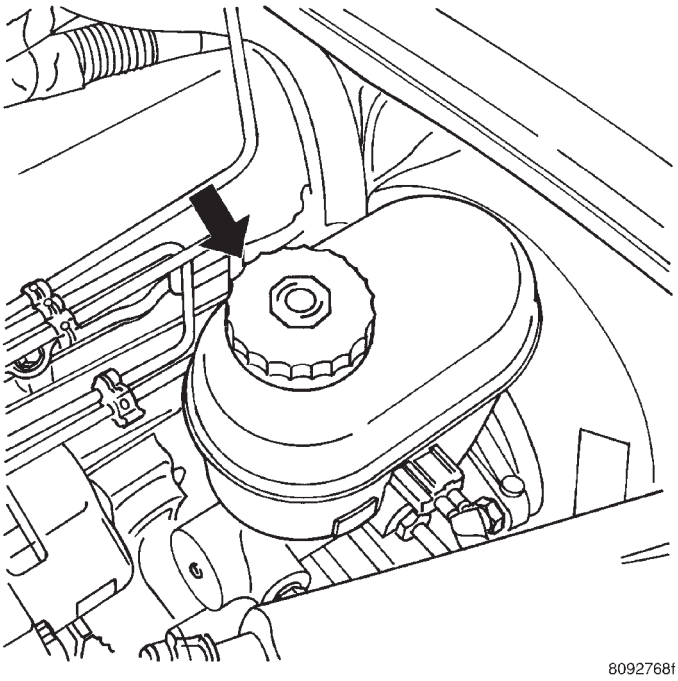

Fig. 3 Brake Master Cylinder Reservoir

CAUTION: Only use fluid that meets specified requirements (DOT 3).

NOTE: Wipe the master cylinder cover to remove any dirt.

NOTE: On vehicles equipped with remote antilock brakes, the fluid level check is the same as for a normal system.

Check the brake master cylinder fluid level (Fig. 3). Add fluid to bring the level to the full line on the side of the reservoir (or above the bottom of the split ring in the primary filler hole). Be sure both primary and secondary cavities are full to the maximum level as indicated.

UNDER HOOD (Continued)

POWER STEERING RESERVOIR

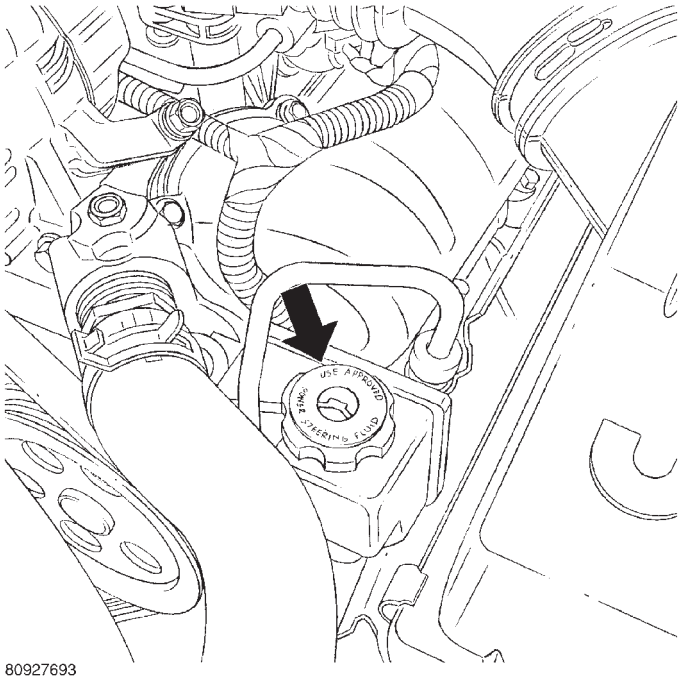

Fig. 4 Power Steering Reservoir - 4.7L

CAUTION: Only use fluid that meets specified requirements. Petroleum fluids, such as Mopar® Power Steering Fluid, are specially formulated for use with power steering hoses and seals.

CAUTION: On 4.7L engine vehicles, DO NOT operate engine if power steering fluid in the power steering reservoir (Fig. 4) is below the add level indicator mark. Sever damage to the engine, radiator cooling fan or power steering pump can occur.

NOTE: On 4.7L engine vehicles, the power steering pump supplies hydraulic fluid under pressure to the hydraulic radiator cooling fan. If fluid level is low in the power steering reservoir, insufficient fluid volume and/or pressure may be supplied to the fan motor preventing the radiator cooling fan from operating properly and allowing the engine to over heat.

Check the fluid level; it should be maintained at the proper level indicated on the dipstick, or as viewed through the translucent reservoir. If fluid is required, fill to the proper level. With the engine running at normal operating temperature, turn the steering wheel from stop to stop to expel air from within the system Stop the engine, remove the cap, and recheck the fluid level, making sure that foaming is not present.

WINDSHIELD WASHER RESERVOIR

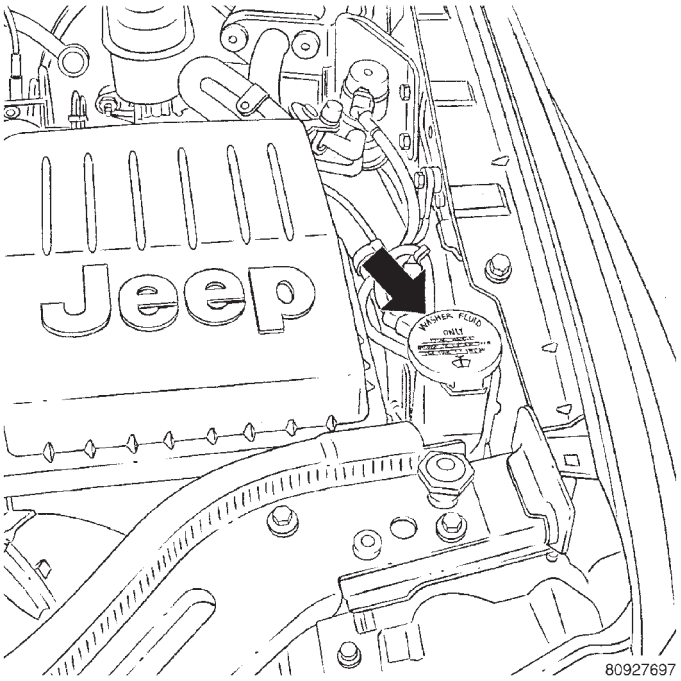

Fig. 5 Windshield Washer Reservoir

CAUTION: Do not add engine coolant (antifreeze) to this reservoir.

CAUTION: Avoid spilling washer solvent on the vehicles paint; it could harm the finish.

Check windshield washer solvent reservoir (Fig. 5) and fill as necessary.

NOTE: When using concentrated solvent such as Mopar® All-Weather Windshield Washer Solution, dilute per container directions.

COOLING SYSTEM RESERVOIR

WARNING: Do not remove radiator cap while cooling system is under pressure.

NOTE: Add coolant only to plastic reserve tank if it is required. Engine must be at normal operating temperature before adding coolant to reserve tank. In cold climates, coolant in reserve tank may appear low; do not add coolant until normal temperature is reached.

Check coolant level with engine idling at normal operating temperature. Coolant level in plastic reserve tank (Fig. 6) must be between the minimum and maximum marks.

UNDER HOOD (Continued)

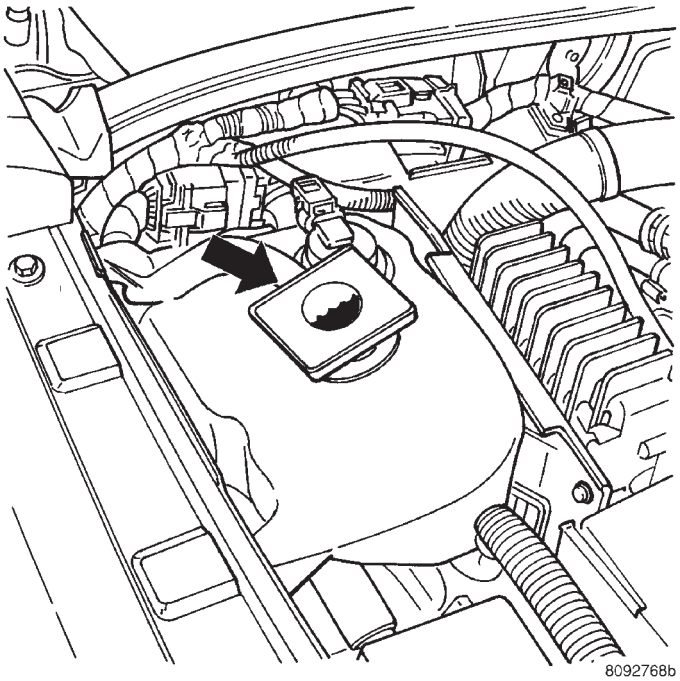

Fig. 6 Engine Coolant Reservoir

If coolant is added, use a 50/50 —34.4°C (-30°F protection) concentration of the recommended anti-freeze and distilled water (Refer to LUBRICATION & MAINTENANCE/FLUID TYPES - DESCRIPTION). Use a higher concentration (up to 65%) if a lower freeze point is required. Do not use recycled coolant in new vehicles.

INSPECTION - LINES/HOSES

Inspect the following for line and hose leaks. Also inspect routing and connections and reroute and tighten as required.

- Brake Lines (Fig. 7)
- Fuel Lines (Fig. 7)
- Parking Brake Cables (Fig. 8)
- ABS Wiring, if equipped (Fig. 8)
- Power Steering Hoses
- Vacuum Hoses
- Heating/Coolant Hoses
- Refrigerant Lines

INSPECTION – BATTERY

When battery is easily accessible, check the test indicator (green dot), terminal tightness and felt (grease) washer on battery posts. Recharge battery as required to assure that the green dot is visible.

When battery is not easily accessible check battery condition with a voltmeter at the jump start locations, or check the voltmeter on the instrument panel (Fig. 9). The reading should be at least 12.4 volts. Recharge battery as required (Refer to 8 - ELECTRICAL/BATTERY SYSTEM/BATTERY - STANDARD PROCEDURE).

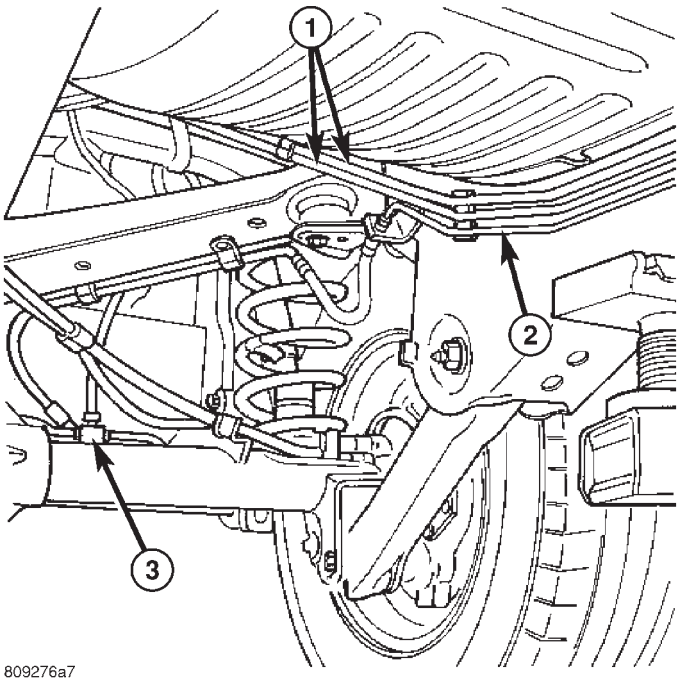

Fig. 7 Brake Lines and Fuel Lines

1 - FUEL LINES
2 - BRAKE LINE
3 - REAR BRAKE SPLITER BLOCK

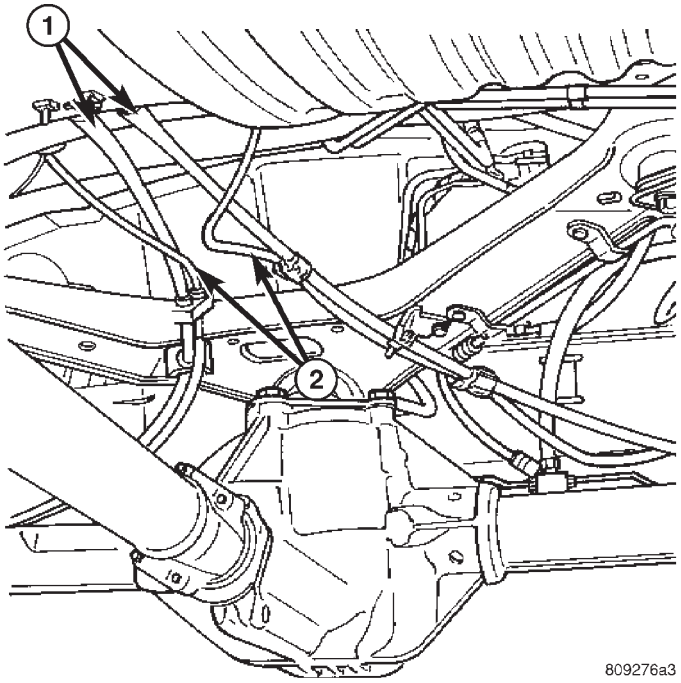

Fig. 8 Parking Brake Cables and ABS Wiring

1 - PARKING BRAKE CABLES
2 - ABS WIRING (IF EQUIPPED)

UNDER HOOD (Continued)

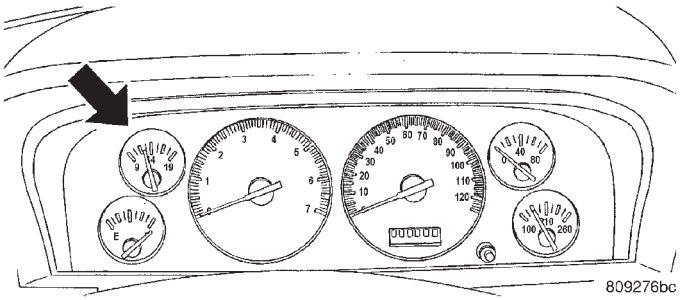

Fig. 9 Instrument Cluster Battery Voltage Gauge

INSPECTION - WIRING

The assembly plant has shipped all vehicles with the interior lights and most electronic memories non-functional by way of an Ignition Off Draw (IOD) fuse removed. The purpose is to reduce the possibility of battery run-down during shipping and storage.

Vehicles stored after prep should have the IOD fuse that activates the accessories pulled to prevent battery drain.

NOTE: Ensure that the IOD fuse is removed to prevent battery drain and possible damage. Vehicles stored for extended periods after prep should be washed frequently, to prevent environmental damage, and reinspected for storage-related problems before delivery.

(1) Install the IOD fuse as equipped. (ON vehicles being delivered, remember to reset radio, clock, compass, etc., as required.)

(2) Check routing and connections of all underhood wiring-reroute and connect as required.

(3) Make sure the starter, generator and air conditioning clutch wiring are correctly installed, routed, and in the clips where provided.

(4) For predelivery storage, always pull the IOD fuse that activates accessories.

UNDER VEHICLE

INSPECTION - TIRE PRESSURES

(1) Using the tire placard or the Safety Certification Label, check that the correct tires are mounted on the vehicle.

(2) Install valve stem extensions as required.

(3) Using the tire placard or the Safety Certification Label, check tire pressure (including spare) and adjust as required to recommended pressure.

NOTE: Tire pressure may have been set above normal during manufacturing in order to properly seat the tire bead. Be sure to adjust to proper specification.

INSPECTION - VISUAL

CAUTION: Before raising the vehicle on a hoist, (Refer to LUBRICATION & MAINTENANCE/LIFT POINTS - STANDARD PROCEDURE).

(1) Visually inspect the following for loose attachment, leakage, clearance and routing, and tighten connections and clamps as required:

- Engine
- Oil Cooler
- Cooling System
- Transmission
- Driveshaft Boots
- Differential
- Transfer Case (Fig. 10)
- Transmission Cooler
- Brake System
- Fuel System
- Exhaust System
- Steering and Suspension Components

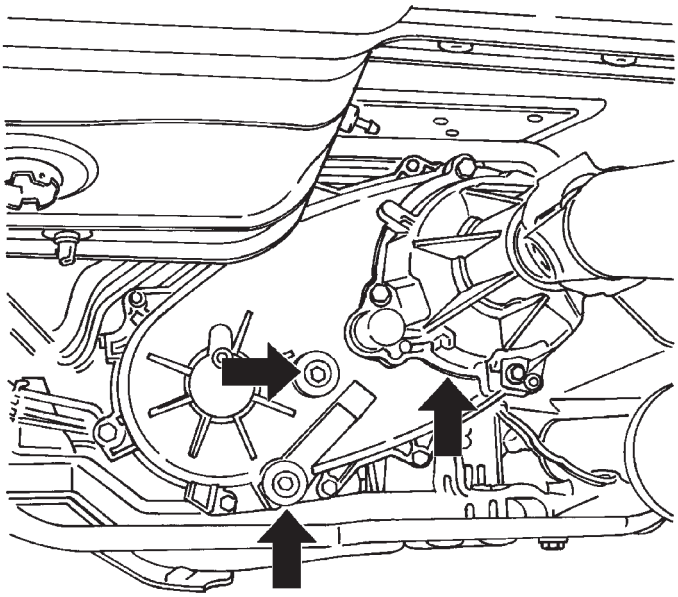

Fig. 10 Transfer Case

INSTALLATION - WHEEL COVERS

(1) Align valve notch in wheel cover with valve stem on shell. Install cover on wheel by hand only.

(2) Install and torque wheel nuts to 135 N·m (100 lb. ft.).

(3) Install nut caps, if equipped using lug wrench, do not over tighten.

(4) Remove release liner from removal instructions label and install label next to jacking instructions label. Surface must be clean and flat for proper adhesion of label.

EXTERIOR

INSPECTION - BODY SEALING

Visually inspect the following seals during the normal recommended wash. Look for areas where water may have entered the vehicle.

- Door and window seals
- Windshield
- Backlight
- Decklid / liftgate / tailgate
- Sunroof or convertible top

INSPECTION - FIT AND FINISH

(1) Remove all protective coatings/covers. Remove protective film from body moldings.

(2) Make sure body is free from paint chips, scratches, sags, run, dirt or corrosion. Touch up any minor paint chips and scratches as required.

(3) Ensure that moldings and stripes are present and securely fastened to the body.

NOTE: Painted-on accent strips require a unique paint for touch-ups.

(4) Check that the door panels have even gaps and fit well with adjacent body panels.

(5) Check that the liftgate (Fig. 11) has even gaps and fits well with adjacent panels.

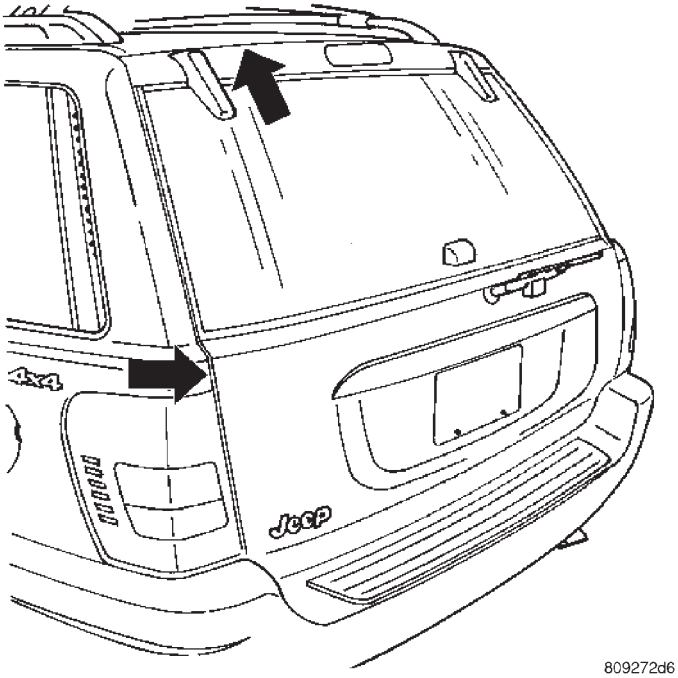

Fig. 11 Liftgate Alignment

(6) Check that the hood panel (Fig. 12) has even gaps and fits well with adjacent panels.

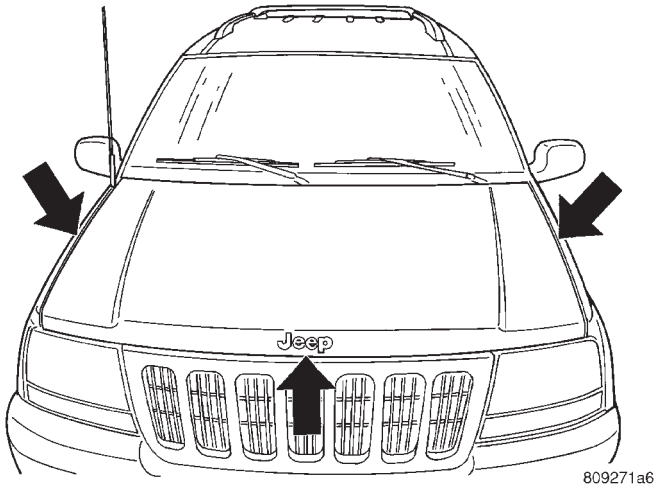

Fig. 12 Hood Alignment

(7) Check that the sunroof glass has even gaps and fits well with adjacent panels.

(8) Ensure that the body is free from dents and dings.

INSPECTION - KEYLESS ENTRY

Check operation of keyless entry system and program the transmitter/receiver if necessary.

INSPECTION - DOORS AND DOOR LOCKS

(1) Check operation of doors and locks, keyless entry, security alarm and liftgate. Adjust strikers and latches as required .

(2) Check operation of childproof door locks, if so equipped.

(3) Remove any protective covers from the door sills.

NOTE: Windows should be in the full up position during these tests (except for the lock tests).

- Open each door (inside and out) to check the release mechanism and ease of operation.
- Partially close the door to check the open-door detent.
- Close the door to check the latches and striker (Fig. 13) and (Fig. 14).
- Open the door, lower the windows depress the lock switch and close the door to check the lock (Fig. 15).
- Unlock each door (using both keys) to check lock and key operation.

NOTE: Child proof door locks should be disabled when delivered to the customer.

BODY INTERIOR (Continued)

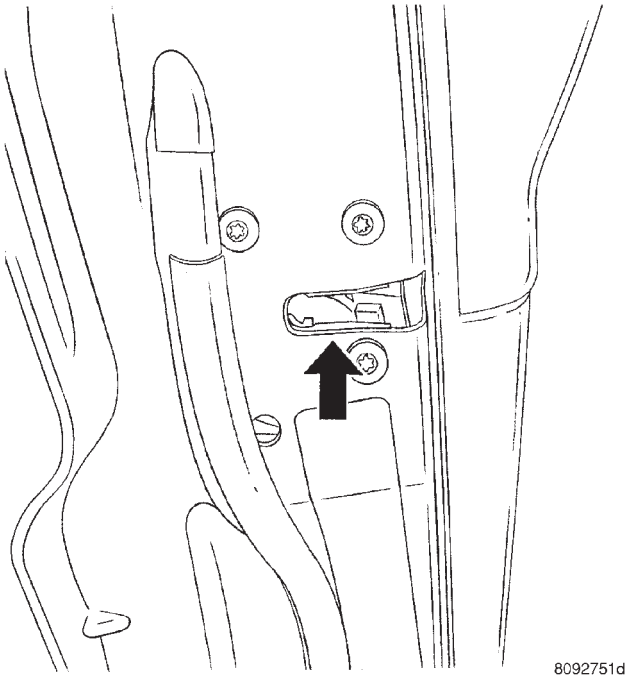

Fig. 13 Door Latch

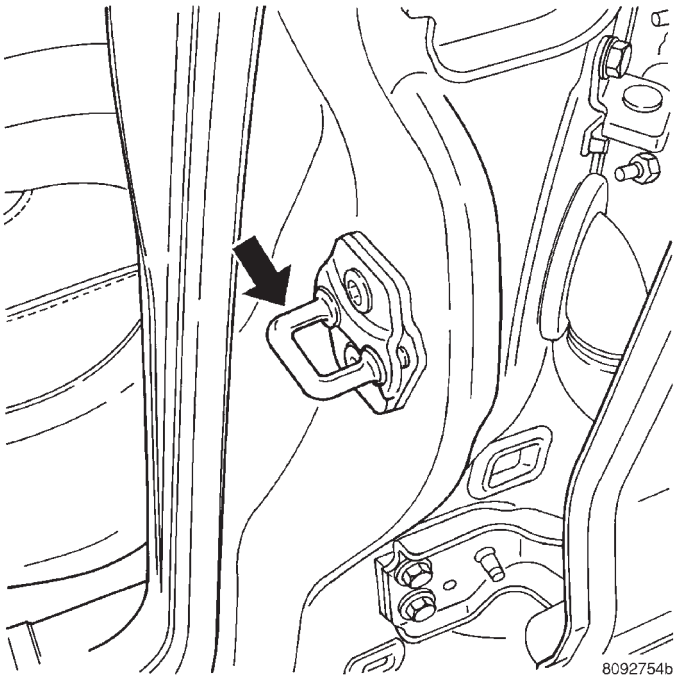

Fig. 14 Door Striker

BODY INTERIOR

INSPECTION - COMPASS

NOTE: Set variance after calibration.

(1) Calibrate and set compass variance (Fig. 16), if so equipped (use appropriate procedures in service information).

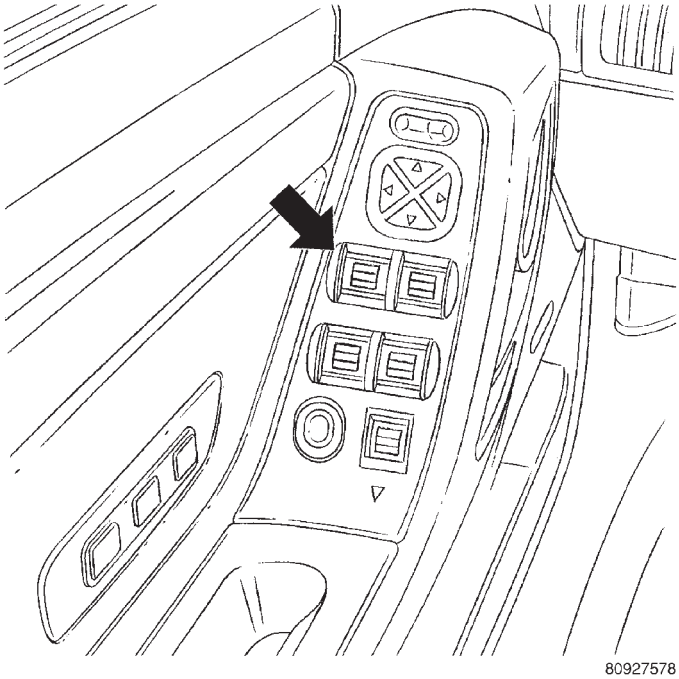

Fig. 15 Window, Mirror and Lock Switches

(2) Remove protective film from overhead console, if equipped.

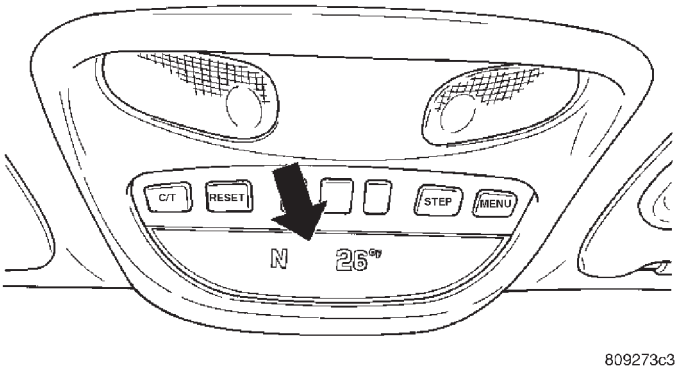

Fig. 16 Overhead Councel with Electronic Compass

INSPECTION - FIT AND FINISH

(1) Remove any interior covers.

(2) Inspect the instrument panel, glove box door and interior moldings for even gaps and alignments.

(3) Check that the door panel material is clean, free from wrinkles and installed correctly.

(4) Check that the seat material is clean, secure and free of wrinkles.

(5) Check that the carpet is clean, secure and free of wrinkles.

(6) Check that the headliner is clean, free of lint and dirt smudges.

INSPECTION - LIGHTS AND SWITCHES

(1) Remove protective film from all switch bezels.

BODY INTERIOR (Continued)

(2) Operate and visually inspect all interior lights and switches, including:

- Dome/map lamps
- Vanity mirror lamps
- Glove box light
- Ashtray light
- Cigar lighter light
- All gauge lights
- Radio display
- Door-mounted lights, if equipped
- Illuminated entry system, if equipped

(3) Visually inspect and operate all exterior lights and their switches, including:

NOTE: Headlamp aim is preset during vehicle assembly.

- Headlights, including high beam, optical horn ("flash to pass") and daylight running lamps (DRL's)
- Tail/stop lamps (including center high-mounted stop lamp)
- Parking lights Turn signals Brake lights (including center high mounted stop lamp)
- Emergency flashers
- Fog/driving lights, if equipped
- Off-road or other lights, if equipped
- Cargo bed lights, if equipped

(4) Check ignition switch for proper operation in all positions (accessory, lock, on, start and off).

INSPECTION - SEAT BELTS, SHOULDER BELTS, RETRACTORS AND HEAD RESTRAINTS

(1) Inspect all seat belts and harnesses to ensure that they connect and hold properly.

(2) Inspect the condition of the belts and anchors.

(3) Inspect for proper seat belt retraction.

(4) Check that safety labels (Fig. 17) regarding the use of seat belts and air bags are in place (such as on the sun visors).

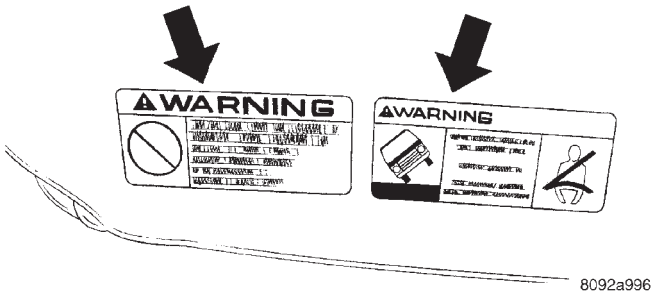

Fig. 17 SAFETY LABELS

(5) Ensure head restraints (Fig. 18) are properly installed. Inspect the height adjustment for ease of operation.

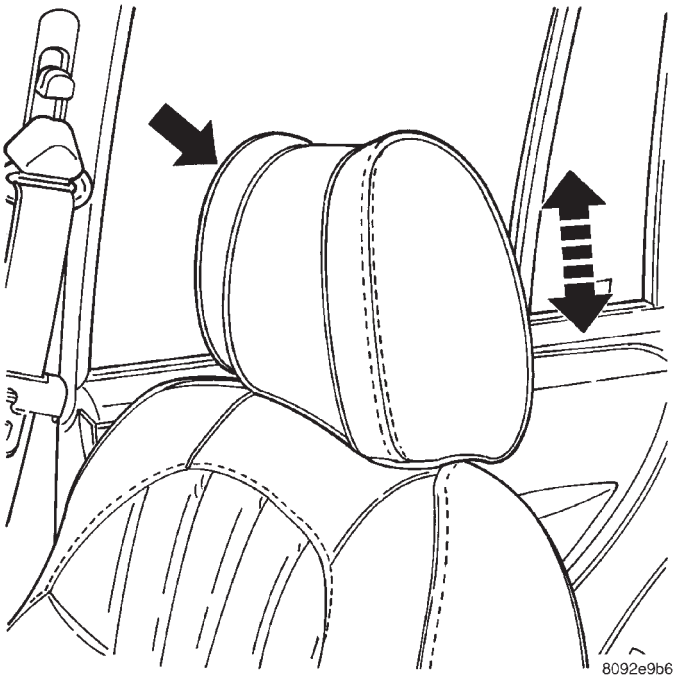

Fig. 18 Head Restraints

INSPECTION - SEATS

(1) Remove protective seat, carpet and door covers (if being delivered) where applicable.

(2) Check that manual/power seat adjustments work properly for all seats.

- Inspect the operation of front seat mechanical slides and power adjusters
- Check the seatback recliner for ease of release and operation
- Check the rear seatback latches for ease of release
- On fold-down rear seats, latch the rear seats and pull forward on the seats to check that the latches hold

(3) Check the seat heaters on vehicles equipped with heated seats (Fig. 19).

(4) Check all seat head restraints (Fig. 20).

(5) Check that all seats are securely located in their adjustable tracks.

INSPECTION - WINDOWS, DOORS AND LOCKS

(1) Check all power window switches (Fig. 21) for proper operation.

(2) Run all power or manually operated door, quarter and vent windows to the fully closed position to check operation and sealing.

(3)

(4) Check all power/manual door locks (Fig. 21) for correct operation.

(5) Ensure that all doors open/close easily.

(6) Test the remote fuel door release, if so equipped.

BODY INTERIOR (Continued)

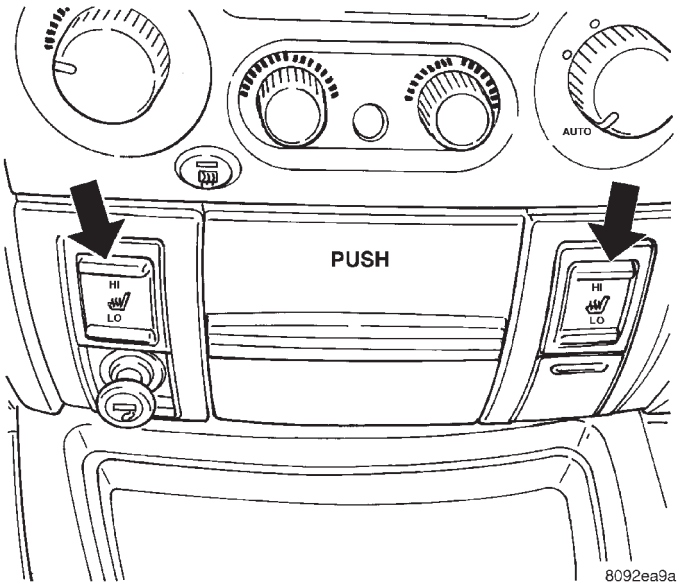

Fig. 19 Seat Heater Switches

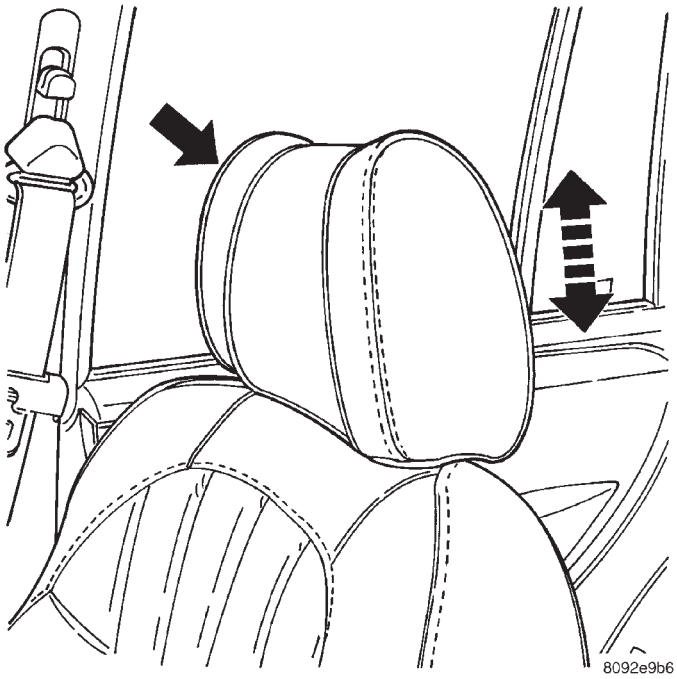

Fig. 20 Seat Head Restraints

(7) Check that the glove box door opens/closes easily.

(8) Check that the console door opens/closes easily.

(9) Ensure that the sunroof opens/closes easily if so equipped.

INSTALLATION - SHIPPED LOOSE ITEMS

(1) Install the antenna mast.

(2) Install rear license plate holder and front license plate holder (if required).

(3) Install wheel covers (if required).

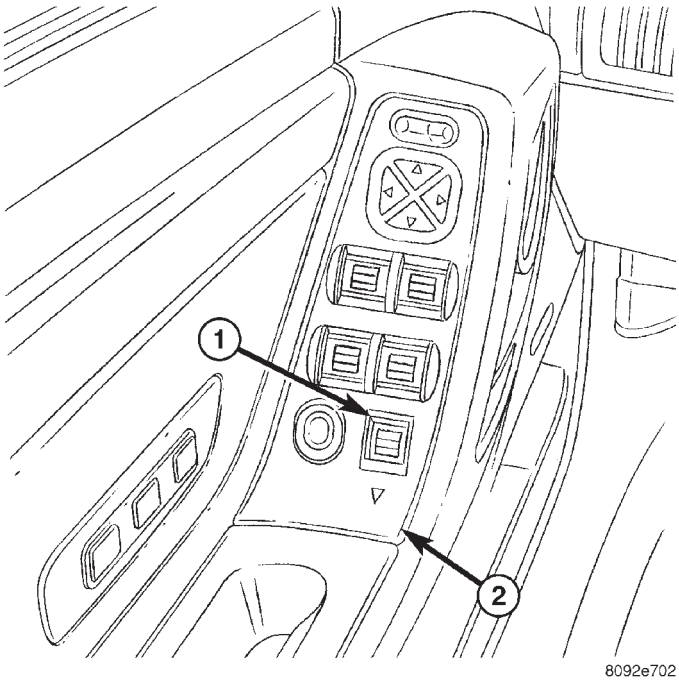

Fig. 21 POWER WINDOW AND LOCK SWITCHES

1 - Power Door Lock Switch
2 - Window/Door Lock Switch Control Panel - Drivers Door

ROAD TEST

DESCRIPTION - ROAD TEST INSPECTION

The following items must be inspected during the road test portion of the new vehicle inspection.

- Check neutral safety switch operation
- Check operation of shift/clutch interlock system
- Check operation of gauges and warning lights
- Check horn operation
- Check operation of turn signals and emergency flashers
- Check all mirror adjustments, including day/night function
- Check windshield wipers for proper wipe pattern and intermittent mode (if equipped)
- Check washer spray pattern
- Check heater, defroster and air conditioning for proper operation
- Check that the fan operates quietly
- Check the rear window defroster (if equipped)
- Leave air selection lever in the fresh air position
- Check the rear heater and air conditioning for proper operation
- Check the rear air register locations
- Check that the indicator lamps operate properly
- Check the operation of the radio, cassette and/or compact disc player, and that sound quality is good
- Ensure that the clock displays the correct time

ROAD TEST (Continued)

- Check that the trip computer/maintenance reminder operates in all modes
- Check all speed control functions
- Check the service brakes to ensure that they stop the vehicle in a straight line, without noise, shudder or vibration
- Check the brake warning light
- Check the parking brake operation
- Check the engine's performance
- Check the transmission's performance for smooth, quiet operation. If the vehicle is a 4x4, check that the transfer case shifts easily among all ranges
- Check Autostick function (if equipped)
- Check the vehicle's steering and handling
- The steering wheel should be centered when traveling in a straight line
- The vehicle should not pull or vibrate
- Check for squeaks, rattles and wind noise
- Check any other vehicle aspects you believe are important, but that may not be included on the New Vehicle Preparation Form
- Fill fuel tank with specified grade of fuel

INSPECTION - FUEL

Fill fuel tank with specified grade of gasoline (regular, midgrade or premium).

INSPECTION - OTHER

As part of DaimlerChrysler's Customer One philosophy, the "Other" blank is provided on the New Vehicle Preparation Form. This is designed to encourage you to check any aspects of vehicle operation that you believe are important to your customers, but that do not appear elsewhere on the form.

INSPECTION - SQUEAKS, RATTLES AND WIND NOISE

(1) Make sure that the instrument panel, glove box, seats, steering wheel and column are free from squeaks and rattles. Tighten any obvious loose fasteners.

(2) Check that the windows and doors are free from squeaks, rattles and wind noise.

(3) Check that the vehicle exterior is free from squeaks, rattles and noise, front and rear.

(4) Make sure that all interior panels are free from squeaks and rattles.

INSPECTION - STEERING AND HANDLING

(1) Check that the power assist works properly (if equipped). Steering should not require excessive effort.

(2) Make sure the steering wheel does not vibrate at idle or road speed.

(3) Ensure that the steering wheel is centered when traveling straight ahead.

(4) Check that the vehicle does not drift to one side.

(5) Make sure that the vehicle does not vibrate/shake.

INSPECTION - TRANSMISSION/TRANSFER CASE

(1) Make sure that the park lock holds the vehicle. With the vehicle on a grade, put transmission in PARK and slowly release the service brake to see if park lock holds. If it does not hold, the transmission requires further service.

(2) Make sure shift lever operates easily/smoothly.

(3) Check for smooth shifting. Check for proper upshifting and downshifting.

(4) Shift the transfer case through all ranges to make sure shifting is smooth and all gear positions respond accordingly.

INSPECTION - ENGINE PERFORMANCE

Check the engine for proper performance. It should:

- Start promptly
- Be free from stalling
- Idle smoothly and at proper speed
- Be free from stumbling or hesitation
- Produce sufficient power
- Be free from unusual noises
- Operate within the proper temperature range
- Stop when the ignition key is shut off

INSPECTION - PARKING BRAKE

(1) Ensure that the parking brake is easy to operate.

(2) Make sure the parking brake does not drag.

(3) With the vehicle stopped on a grade, firmly apply the service brakes, place the transmission in NEUTRAL and set the parking brake. Slowly release the service brakes to see if the parking brake will hold.

(4) Check that the parking brake warning light comes on when the parking brake is applied, and is off when the brake is released.

INSPECTION - SERVICE BRAKES

(1) Check brake warning light operation at vehicle startup.

(2) Check ABS warning light operation at vehicle startup.

(3) Inspect service brake pedal travel and feel.

(4) Put the vehicle in gear and apply the brakes while the car is in motion. Be sure brake operation is smooth and positive.

(5) Make sure that the vehicle stops in a straight line, without pulling to one side.

ROAD TEST (Continued)

(6) Check that the brakes operate quietly, without noise.

(7) Ensure there is no shudder or vibration when braking.

INSPECTION - SPEED CONTROL

Check the following speed control functions:

- Check on/off switch
- Check “set” operation
- Check “resume” function
- Check “accelerate” and “decelerate” functions
- Check brake release function
- Check “cancel” function

INSPECTION - TRIP COMPUTER/ MAINTENANCE REMINDER

NOTE: Reset the average fuel economy when the road test is complete.

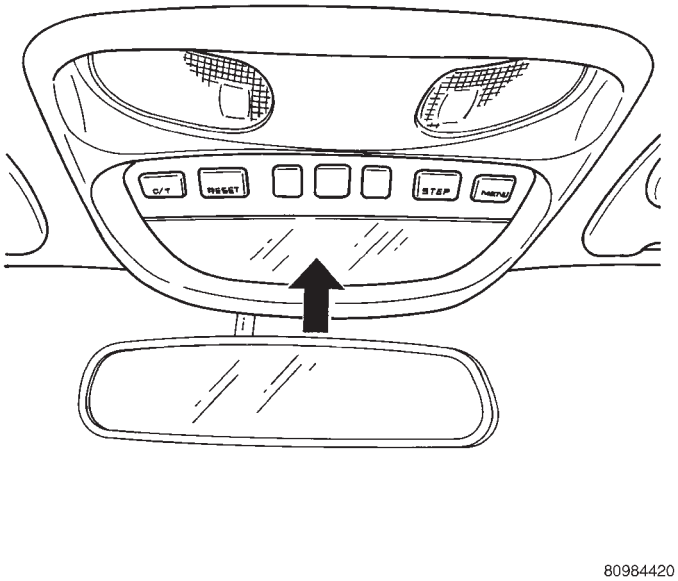

Fig. 22 TRIP/MAINTENANCE COMPUTER

Check that all modes operate correctly (Fig. 22).

INSPECTION - RADIO, TAPE PLAYER AND/OR CD PLAYER

(1) Check for good AM/FM reception.

(2) Ensure that the cassette and/or compact disc (CD) player works properly.

(3) Check for good sound quality from all speakers.

(4) Ensure that the radio (Fig. 23) displays the correct time.

(5) Check the steering wheel controls (if equipped).

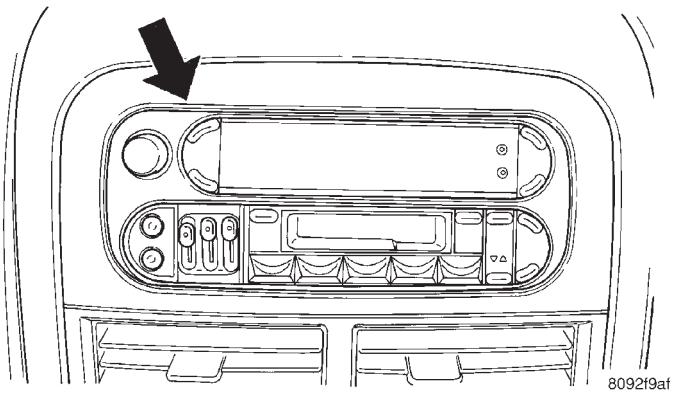

Fig. 23 RADIO AND TAPE PLAYER

INSPECTION - HEATER/AIR CONDITIONER

(1) Check that heater/defroster works properly.

(2) Turn on the heater when the engine reaches operating temperature.

(3) Operate the blower motor in all speeds.

(4) Operate system in all modes (Fig. 24) (heat, defrost, etc.).

(5) Operate the rear heater (if equipped).

(6) Check for hot air output at all outlets.

(7) Operate temperature levers.

(8) Ensure that rear defroster works.

(9) Turn on rear defroster during drive, then feel window for warmth after drive.

(10) Turn on air conditioning system.

(11) Check that the air conditioner cools properly.

(12) Activate the A/C in all modes (Fig. 24). (Make sure all modes work properly including rear unit if equipped.).

(13) Operate blower motor switch at all speeds.

(14) Check for cold output at outlets.

(15) Check that fan operation is quiet.

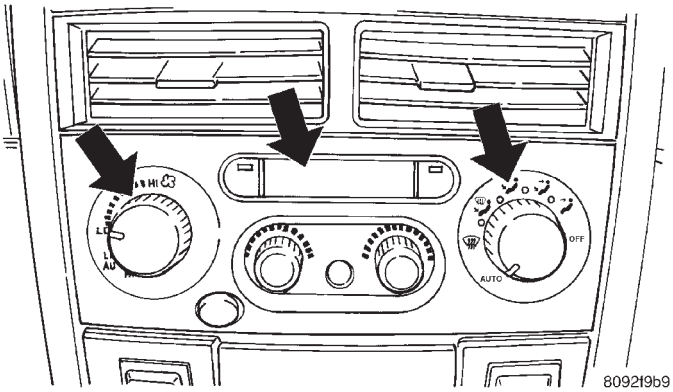

Fig. 24 HEATER/AIR CONDITIONING CONTROLS

INSPECTION WINDSHIELD WIPERS/WASHERS

(1) Check washer spray pattern for proper operation and aim.

(2) Check intermittent wipe feature for proper operation.

ROAD TEST (Continued)

(3) Inspect wiper blades, check for proper wiping pattern-no streaking or missed areas.

INSPECTION - MIRRORS

(1) Check operation of rear view mirror's (Fig. 25) and (Fig. 26) day/night function (if equipped).

(2) Check ease of adjustment for all mirrors (power or manual).

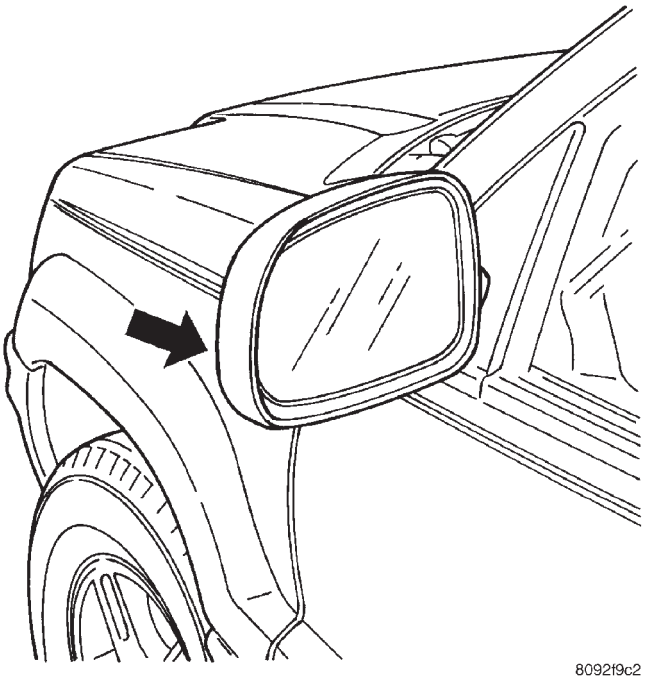

Fig. 25 DOOR MOUNTED REAR VIEW MIRROR

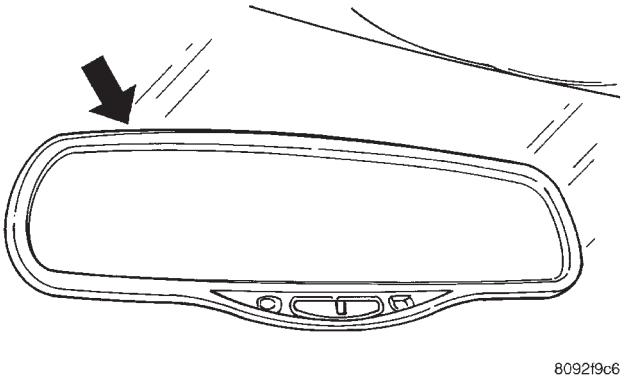

Fig. 26 INTERIOR REAR VIEW MIRROR

INSPECTION - TURN AND EMERGENCY SIGNALS

(1) Ensure that the turn signals work properly (including canceling after completing a turn).

(2) Ensure that the emergency flashers work properly.

INSPECTION - HORN

Ensure that the horn works properly.

INSPECTION - GAUGES/WARNING LIGHTS

(1) Ensure that all gauges, instrument indicator lights, warning lights and instrument panel lights (Fig. 27) are functioning properly.

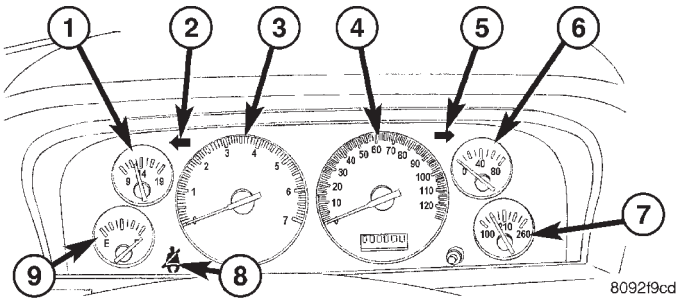

Fig. 27 INSTRUMENT CLUSTER GAUGES AND WARNING LIGHTS

1 - BATTERY VOLTAGE GAUGE
2 - LEFT TURN INDICATOR LAMP
3 - TECHOMETER
4 - SPEEDOMETER
5 - RIGHT TURN INDICATOR LAMP
6 - ENGINE OIL PRESSURE GAUGE
7 - ENGINE COOLANT TEMPERATURE GAUGE
8 - SEAT BELT INDICATOR LAMP
9 - FUEL GAUGE

(2) Inspect operation of message center (if equipped).

INSPECTION - SHIFT/CLUTCH INTERLOCK SYSTEM

(1) On vehicles with a manual transmission or transaxle, be sure engine starts only when clutch is depressed.

(2) Some vehicles equipped with an automatic transaxle also have a brake interlock system. On these vehicles, be sure that you cannot shift out of PARK without pressing the brake pedal.

INSPECTION - NEUTRAL SAFETY SWITCH

(1) On vehicles with an automatic transmission or transaxle, check shift indicator alignment in all ranges.

(2) Be sure the engine starts in both PARK and NEUTRAL.

(3) Verify that the engine does not start in any REVERSE/DRIVE positions.

PRE DELIVERY STORAGE

DESCRIPTION

Pre Delivery Storage information is provided to recommend practices to use when storing new vehicles prior to delivery to the customer.

PRE DELIVERY STORAGE (Continued)

If you have prepared a vehicle that will not be immediately delivered to the customer, store the vehicle according to guidelines outlined in (Refer to 30 - NEW VEHICLE PREP/PREDELIVERY STORAGE - STANDARD PROCEDURE) to prevent unnecessary wear and tear on the vehicles electrical systems, paint and finish and damage due to pilferage and vandalism.

STANDARD PROCEDURE - PRE DELIVERY STORAGE

(1) If possible, store vehicles indoors, in clean, dry places. If vehicles must be stored outdoors:

- Try to avoid storage locations that are near any obvious sources of industrial or environmental contamination (e.g., trees, factories, steam or vapor vents, railroad tracks, etc.)
- Maintain tight security to help prevent pilferage and vandalism, and inspect each vehicle regularly to check for such damage
- If the vehicle must be parked on an incline, park it with the front end higher than the rear; this will prevent “hydrostatic lock” caused by fuel draining into the engine
- Rinse the vehicle at least once a week. Snow should be washed away more often, since it can trap harmful contaminants. Dry all horizontal surfaces

(2) The IOD fuse should be removed in order to prevent battery drain and possible damage.

(3) Check the vehicle’s coolant and anti-freeze protection.

(4) Check the vehicle’s battery at least once a month for a proper charge (at least 12.4 volts). Charge the battery if necessary. This will help prevent freezing and deterioration.

(5) Check the vehicle’s tires and inflate them to their maximum recommended levels. Move the vehicles periodically to avoid “flatspotting” the tires.

(6) Do not engage the parking brake; keep it in the OFF position.

(7) Keep all windows closed, all doors locked, and all trim covers intact and in place.

(8) Do not use chalks, crayons or any marker containing abrasives on painted, plated or glass surfaces.

(9) Always use seat covers when moving a vehicle.

PROGRAMMABLE ELECTRONIC FEATURES

DESCRIPTION

The programming of electronic features applies to specific DaimlerChrysler Corporation vehicles. Not all vehicles are equipped with these electronic features, and not all vehicles equipped with electronic features have all the available features. Programmable electronic features are subject to change and may be added or deleted from specific vehicle models.

(1) The programmable electronic features that may be provided on the vehicle are:

- Rolling Power Door Locks
- Horn Chirp (When Doors Locked With Remote Keyless Entry)
- Headlamp Flash (When Doors Locked or Unlocked With Remote Keyless Entry)
- Low Fuel Chime
- Remote Keyless Entry Door Unlock Sequence
- Headlights On Automatically With Wipers
- Turn Signal Chime
- 12V Power Outlet
- Remote Unlock
- Remote Linked To Memory
- Headlamp Delay
- Service Interval
- Easy Exit Seat

(2) Programming any of the above features is to be performed prior to vehicle delivery to the customer, depending on customer preference.

NOTE: For all vehicles except Caravan/Voyager/Town and Country, the programming must be performed using the DRB III scan tool. On Caravan/Voyager/Town and Country vehicles the features can be programmed using the DRB III scan tool or by button pushing sequences. The customer can perform programming, if desired, by following the instructions outlined in the owner manual.

OPERATION

NOTE: The programmable features provided on vehicles need to be explained to the customer at the time of sale. The customer’s preferences concerning the features should be noted and programmed accordingly during predelivery.

NOTE: When using the DRB III® scan tool to enable/disable any programmable electronic features, go to the main menu item #9 on the DRB III® scan tool. This is “Customer Preferences”. You must choose “Customer Preferences” on the main menu to program the desired features.

ROLLING POWER DOOR LOCKS

With this feature enabled, the vehicle’s door locking mechanisms automatically lock when the vehicle reaches approximately 24 Km/h (15 mph).

PROGRAMMABLE ELECTRONIC FEATURES (Continued)

HORN CHIRP

NOTE: This feature can be enabled with or without the headlamp flash feature.

The horn chirp function is a feature that can be enabled or disabled on vehicles equipped with Remote Keyless Entry (RKE). The horn chirps when the vehicle is locked with the RKE transmitter.

HEADLAMP FLASH

NOTE: This feature can be enabled with or without the horn chirp feature.

The headlamp flash function is a feature that can be enabled or disabled on vehicles equipped with Remote Keyless Entry (RKE). The headlamps flash once when the vehicle is locked with the RKE transmitter, and flash twice when the vehicle is unlocked with the RKE transmitter.

LOW FUEL CHIME

All vehicles equipped with the audible low fuel chime are shipped with this feature enabled.

REMOTE KEYLESS ENTRY (RKE) DOOR UNLOCK SEQUENCE

Two door unlock sequences are provided on vehicles equipped with this feature. When using the RKE transmitter to unlock the doors, pressing the unlock button once when the feature is enabled unlocks only the driver's door. Pushing the RKE transmitter unlock button a second time unlocks the remaining doors. When the RKE door unlock feature is disabled, all doors unlock with one press of the RKE transmitter unlock button.

HEADLIGHTS ON AUTOMATICALLY WITH WIPERS

This feature appears on vehicles that have, as an option, automatic headlights. When the windshield wipers are turned on, the headlights automatically turn on.

12V POWER OUTLET

This feature currently appears on Caravan/Voyager/Town and Country vehicles. The vehicles are shipped with the 12V power outlets turned off with the ignition key. The relay can be changed to make the outlets powered at all times. This feature may be of interest to customers with cell phones.

TURN SIGNAL CHIME

This feature is an audible turn signal warning chime. The chime sounds if the turn signal is on, the vehicle has traveled one mile and vehicle speed has exceeded 40 Km/h (25 mph).

REMOTE UNLOCK

The remote unlock function is a feature that can be enabled or disabled on vehicles equipped with Remote Keyless Entry (RKE). With the first press of the RKE transmitter to unlock the doors, the driver's door only unlocks. With the second press of the RKE transmitter, the remaining doors and the liftgate unlock. With the remote unlock feature enabled, the first press of the RKE transmitter unlocks all doors.

REMOTE LINKED TO MEMORY

The remote linked to memory function is currently only available only on Jeep Grand Cherokee Limited vehicles. When enabled, this feature recalls a memory of seats, mirror and radio presets and positions when unlocking the vehicle with the RKE transmitter.

HEADLAMP DELAY

Currently available only on Jeep Grand Cherokee vehicles, the headlamp delay timeout can be set to 30, 60 or 90 seconds. This timeout only occurs when the ignition is turned off prior to turning the headlamps off, or when leaving the headlamps in AUTO mode.

SERVICE INTERVAL

Currently available only on Jeep Grand Cherokee vehicles, the interval for the service reminder message can be set from 3,219 kilometers to 12,070 kilometers (2,000 miles to 7,500 miles).

EASY EXIT SEAT

Currently available only on Jeep Grand Cherokee Limited vehicles, the driver's seat will reposition 55mm (2.1 inches) rearward, or the end of travel if less than 55mm (2.1 inches) and full downward when the key is removed from the ignition. This feature allows ease of exiting the vehicle. The seat will reposition itself to the memory location when the vehicle is unlocked using the RKE transmitter or by pressing the memory buttons on the door panel.

APPEARANCE TIPS

CLEANING

(1) Before delivering the new vehicle to the customer, the following checks on appearance details are recommended:

- Wash the vehicle to remove all traces of road grime and other dirt on the car from new vehicle preparation operations
- Clean the tire sidewalls
- Clean exterior and interior glass surfaces
- Remove all protective covers

APPEARANCE TIPS (Continued)

- Remove undercoat overspray, excess window sealer, and excess weatherstrip adhesive
- Inspect interior trim, seats, carpeting, and moldings. Clean as necessary
- Remove shipping and inspection stickers
- After the vehicle is clean, inspect the paint again

(2) Mopar® offers a wide variety of car care products, developed to meet your dealership's requirements. All are specifically formulated for DaimlerChrysler vehicles

FINAL STEPS

NEW VEHICLE PREPARATION FORM

Complete the Emission Certification Of Conformity Statement on the bottom of the New Vehicle Preparation Form (Fig. 1) in the glove box or storage box after it has been completed and signed by the designated individual.

OWNER CHECK OUT

The last step in the new vehicle preparation procedure is to help the customer become familiar with the features on their new vehicle. Show the new owner where the controls and gauges are and explain how they operate.

INSPECTION - INFORMATION LABELS

Verify that the following labels are installed and legible.

- Emission control labels
- Monroney label
- Tire pressure label
- Vehicle certification label

Description	Group-Page
ABS - DESCRIPTION, BRAKES	5-36
ABS - OPERATION, BRAKES	5-36
ABS BRAKE SYSTEM - STANDARD PROCEDURES, BLEEDING	5-37
ABS INDICATOR - DESCRIPTION	8J-12
ABS INDICATOR - OPERATION	8J-12
ABSORBER - INSTALLATION, FRONT	13-1
ABSORBER - INSTALLATION, REAR	13-2
ABSORBER - REMOVAL, FRONT	13-1
ABSORBER - REMOVAL, REAR	13-2
A/C APPLICATION TABLE, SPECIFICATIONS	24-7
A/C COMPRESSOR - DESCRIPTION	24-56
A/C COMPRESSOR - INSTALLATION	24-58
A/C COMPRESSOR - OPERATION	24-57
A/C COMPRESSOR - REMOVAL	24-58
A/C COMPRESSOR CLUTCH - DESCRIPTION	24-13
A/C COMPRESSOR CLUTCH - INSPECTION	24-14
A/C COMPRESSOR CLUTCH - INSTALLATION	24-15
A/C COMPRESSOR CLUTCH - OPERATION	24-13
A/C COMPRESSOR CLUTCH - REMOVAL	24-14
A/C COMPRESSOR CLUTCH RELAY - DESCRIPTION	24-16
A/C COMPRESSOR CLUTCH RELAY - DIAGNOSIS AND TESTING	24-16
A/C COMPRESSOR CLUTCH RELAY - INSTALLATION	24-17
A/C COMPRESSOR CLUTCH RELAY - OPERATION	24-16
A/C COMPRESSOR CLUTCH RELAY - REMOVAL	24-17
A/C CONDENSER - DESCRIPTION	24-59
A/C CONDENSER - INSTALLATION	24-60
A/C CONDENSER - OPERATION	24-59
A/C CONDENSER - REMOVAL	24-60
A/C DISCHARGE LINE - INSTALLATION	24-61
A/C DISCHARGE LINE - REMOVAL	24-61
A/C EVAPORATOR - DESCRIPTION	24-63
A/C EVAPORATOR - INSTALLATION	24-65
A/C EVAPORATOR - OPERATION	24-63
A/C EVAPORATOR - REMOVAL	24-64
A/C HEATER CONTROL - DESCRIPTION	24-17
A/C HEATER CONTROL - INSTALLATION	24-25
A/C HEATER CONTROL - OPERATION	24-17
A/C HEATER CONTROL - REMOVAL	24-24
A/C HIGH PRESSURE SWITCH - DESCRIPTION	24-25
A/C HIGH PRESSURE SWITCH - DIAGNOSIS AND TESTING	24-25
A/C HIGH PRESSURE SWITCH - INSTALLATION	24-25
A/C HIGH PRESSURE SWITCH - OPERATION	24-25
A/C HIGH PRESSURE SWITCH - REMOVAL	24-25
A/C LOW PRESSURE SWITCH - DESCRIPTION	24-26
A/C LOW PRESSURE SWITCH - DIAGNOSIS AND TESTING	24-26
A/C LOW PRESSURE SWITCH - INSTALLATION	24-26
A/C LOW PRESSURE SWITCH - OPERATION	24-26
A/C LOW PRESSURE SWITCH - REMOVAL	24-26
A/C ORIFICE TUBE - DESCRIPTION	24-67
A/C ORIFICE TUBE - OPERATION	24-68
A/C ORIFICE TUBE - REMOVAL	24-68
A/C PERFORMANCE - DIAGNOSIS AND TESTING	24-2
ACCELERATOR PEDAL - INSTALLATION	14-35
ACCELERATOR PEDAL - REMOVAL	14-35
ACCUMULATOR - DESCRIPTION	24-65
ACCUMULATOR - DESCRIPTION	21-124
ACCUMULATOR - INSPECTION	21-125
ACCUMULATOR - OPERATION	24-65
ACCUMULATOR - OPERATION	21-124
ACTUATION TEST MODE - OPERATION, CIRCUIT	25-2
ACTUATOR - DESCRIPTION, BLEND DOOR	24-30
ACTUATOR - DESCRIPTION, MODE DOOR	24-31
ACTUATOR - DESCRIPTION, RECIRCULATION DOOR	24-33
ACTUATOR - INSTALLATION, BLEND DOOR	24-31
ACTUATOR - INSTALLATION, HEAT/DEFROST - PANEL/DEFROST DOOR ELECTRIC	24-32
ACTUATOR - INSTALLATION, HEAT/DEFROST DOOR VACUUM	24-33
ACTUATOR - INSTALLATION, INSIDE HANDLE	23-103,23-109
ACTUATOR - INSTALLATION, PANEL/DEFROST DOOR VACUUM	24-33
ACTUATOR - INSTALLATION, RECIRCULATION DOOR ELECTRIC	24-34
ACTUATOR - INSTALLATION, RECIRCULATION DOOR VACUUM	24-34
ACTUATOR - REMOVAL, BLEND DOOR	24-30
ACTUATOR - REMOVAL, HEAT/DEFROST - PANEL/DEFROST DOOR ELECTRIC	24-31
ACTUATOR - REMOVAL, HEAT/DEFROST DOOR VACUUM	24-32
ACTUATOR - REMOVAL, INSIDE HANDLE	23-103,23-109
ACTUATOR - REMOVAL, PANEL/DEFROST DOOR VACUUM	24-32
ACTUATOR - REMOVAL, RECIRCULATION DOOR ELECTRIC	24-34
ACTUATOR - REMOVAL, RECIRCULATION DOOR VACUUM	24-33
ADAPTER HOUSING SEAL - INSTALLATION	21-288
ADAPTER HOUSING SEAL - REMOVAL	21-288
ADHESIVE LOCATIONS, SPECIFICATIONS - STRUCTURAL	23-71
ADJUSTER - DIAGNOSIS & TESTING, POWER LUMBAR	8N-25
ADJUSTER - INSTALLATION, SEAT BELT TURNING LOOP	8O-27
ADJUSTER - INSTALLATION, SEAT TRACK	23-176
ADJUSTER - REMOVAL, SEAT BELT TURNING LOOP	8O-26
ADJUSTER - REMOVAL, SEAT TRACK	23-176
ADJUSTER ASSEMBLY - CLEANING, ROCKER ARM	9-26
ADJUSTER ASSEMBLY - DESCRIPTION, ROCKER ARM	9-106,9-26,9-94
ADJUSTER ASSEMBLY - INSPECTION, ROCKER ARM	9-27
ADJUSTER ASSEMBLY - INSTALLATION, ROCKER ARM	9-106,9-27,9-95
ADJUSTER ASSEMBLY - OPERATION, ROCKER ARM	9-26
ADJUSTER ASSEMBLY - REMOVAL, ROCKER ARM	9-106,9-26,9-95
ADJUSTER KNOB - INSTALLATION, TURNING LOOP HEIGHT	8O-28
ADJUSTER KNOB - REMOVAL, TURNING LOOP HEIGHT	8O-27
ADJUSTER NOISE DIAGNOSIS - DIAGNOSIS AND TESTING, HYDRAULIC LASH	9-83,9-97
ADJUSTMENT - STANDARD PROCEDURE, COMPASS VARIATION	8M-4
ADJUSTMENT, BANDS	21-126
ADJUSTMENT, BRAKE LAMP SWITCH	8L-6
ADJUSTMENT, DOOR - DOOR	23-100
ADJUSTMENT, FOG LAMP UNIT - FOG LAMP	8L-11
ADJUSTMENT, HOOD - HOOD	23-122
ADJUSTMENT, LATCH	23-103
ADJUSTMENT, LIFTGATE - LIFTGATE	23-97
ADJUSTMENTS, BRAKE TRANSMISSION SHIFT INTERLOCK	21-129,21-291
ADJUSTMENTS, FRONT AXLE - 186FBI	3-22
ADJUSTMENTS, GEARSHIFT CABLE	21-146, 21-297
ADJUSTMENTS, HEADLAMP UNIT	8L-18
ADJUSTMENTS, PARKING BRAKE SHOE	5-35
ADJUSTMENTS, REAR AXLE - 198RBI	3-55
ADJUSTMENTS, REAR AXLE - 226RBA	3-93
ADJUSTMENTS, STEERING GEAR	19-17
ADJUSTMENTS, TRANSMISSION THROTTLE VALVE CABLE	21-191
ADJUSTMENTS, VALVE BODY	21-239
AFTER AN AIRBAG DEPLOYMENT - STANDARD PROCEDURE, SERVICE	8O-4
AIR CHECKING TRANSMISSION CLUTCH AND BAND OPERATION - DIAGNOSIS AND TESTING	21-77
AIR CHECKING TRANSMISSION CLUTCH OPERATION - DIAGNOSIS AND TESTING	21-246
AIR CONDITIONER - DESCRIPTION, HEATER	24-1
AIR CONDITIONER - OPERATION, HEATER	24-1
AIR CONTROL MOTOR - DESCRIPTION, IDLE	14-40
AIR CONTROL MOTOR - OPERATION, IDLE	14-40
AIR EXHAUSTER - INSTALLATION	23-115
AIR EXHAUSTER - INSTALLATION, D-PILLAR	23-115
AIR EXHAUSTER - REMOVAL	23-115
AIR EXHAUSTER - REMOVAL, D-PILLAR	23-115
AIR OUTLETS - INSTALLATION	24-36
AIR OUTLETS - REMOVAL	24-36
AIR TEMPERATURE SENSOR - DESCRIPTION, INTAKE	14-41
AIR TEMPERATURE SENSOR - OPERATION, INTAKE	14-41
AIRBAG - ASSEMBLY, DRIVER	8O-16
AIRBAG - DESCRIPTION, DRIVER	8O-13
AIRBAG - DESCRIPTION, PASSENGER	8O-20
AIRBAG - DISASSEMBLY, DRIVER	8O-15
AIRBAG - INSTALLATION, DRIVER	8O-17
AIRBAG - INSTALLATION, PASSENGER	8O-21
AIRBAG - OPERATION, DRIVER	8O-14
AIRBAG - OPERATION, PASSENGER	8O-20
AIRBAG - REMOVAL, DRIVER	8O-14
AIRBAG - REMOVAL, PASSENGER	8O-21
AIRBAG CONTROL MODULE - DESCRIPTION	8O-6
AIRBAG CONTROL MODULE - INSTALLATION	8O-8
AIRBAG CONTROL MODULE - OPERATION	8O-6
AIRBAG CONTROL MODULE - REMOVAL	8O-7
AIRBAG DEPLOYMENT - STANDARD PROCEDURE, SERVICE AFTER AN	8O-4
AIRBAG INDICATOR - DESCRIPTION	8J-13
AIRBAG INDICATOR - OPERATION	8J-13
AIRBAG SYSTEM - DIAGNOSIS AND TESTING	8O-3
AIRBAG SYSTEM - SPECIAL TOOLS	8O-6
AIRBAG SYSTEM - WARNING	8O-3
AIRBAGS - STANDARD PROCEDURE, HANDLING OF NON-DEPLOYED	8O-4
AJAR SWITCH - DESCRIPTION, DOOR	8L-32
AJAR SWITCH - DESCRIPTION, DRIVER DOOR	8L-33
AJAR SWITCH - DESCRIPTION, FLIP UP GLASS	8L-32
AJAR SWITCH - DESCRIPTION, HOOD	8Q-8
AJAR SWITCH - DESCRIPTION, LIFTGATE	8L-32
AJAR SWITCH - DIAGNOSIS AND TESTING, DOOR	8L-33
AJAR SWITCH - DIAGNOSIS AND TESTING, HOOD	8Q-9
AJAR SWITCH - INSTALLATION, HOOD	8Q-10
AJAR SWITCH - OPERATION, DOOR	8L-33
AJAR SWITCH - OPERATION, DRIVER DOOR	8L-33
AJAR SWITCH - OPERATION, FLIP UP GLASS	8L-33
AJAR SWITCH - OPERATION, HOOD	8Q-9
AJAR SWITCH - OPERATION, LIFTGATE	8L-33
AJAR SWITCH - REMOVAL, HOOD	8Q-9
AJAR SWITCH BRACKET - INSTALLATION, HOOD	8Q-10
AJAR SWITCH BRACKET - REMOVAL, HOOD	8Q-9
AJAR SWITCH STRIKER - INSTALLATION, HOOD	8Q-11
AJAR SWITCH STRIKER - REMOVAL, HOOD	8Q-10
ALIGNMENT - DESCRIPTION, WHEEL	2-3
ALIGNMENT - OPERATION, WHEEL	2-3
ALIGNMENT, SPECIFICATIONS	2-5
ALUMINUM THREAD REPAIR - STANDARD PROCEDURE	21-247,21-91
AMBIENT TEMPERATURE SENSOR - DESCRIPTION	8M-10

Description	Group-Page
AMBIENT TEMPERATURE SENSOR - DIAGNOSIS AND TESTING	8M-11
AMBIENT TEMPERATURE SENSOR - INSTALLATION	8M-12
AMBIENT TEMPERATURE SENSOR - OPERATION	8M-10
AMBIENT TEMPERATURE SENSOR - REMOVAL	8M-11
AMBIENT TEMPERATURE SENSOR CIRCUIT - DIAGNOSIS AND TESTING	8M-11
AMPERAGE TEST - DIAGNOSIS AND TESTING, FUEL PUMP	14-9
AMPLIFIER - DESCRIPTION	8A-5
AMPLIFIER - DIAGNOSIS AND TESTING	8A-5
AMPLIFIER - INSTALLATION	8A-5
AMPLIFIER - OPERATION	8A-5
AMPLIFIER - REMOVAL	8A-5
AN AIRBAG DEPLOYMENT - STANDARD PROCEDURE, SERVICE AFTER	8O-4
ANGLE - STANDARD PROCEDURES, PROPELLER SHAFT	3-4
ANTENNA - DIAGNOSIS AND TESTING	8A-7
ANTENNA BASE AND LEAD, ANTENNA BODY & CABLE	8A-9
ANTENNA BODY & CABLE - ANTENNA BASE AND LEAD	8A-9
ANTENNA BODY & CABLE - DESCRIPTION	8A-6
ANTENNA BODY & CABLE - OPERATION	8A-7
ANTENNA CABLE - INSTALLATION, INSTRUMENT PANEL	8A-13
ANTENNA CABLE - REMOVAL, INSTRUMENT PANEL	8A-13
ANTILOCK BRAKE - DESCRIPTION, CONTROLLER	8E-9
ANTILOCK BRAKE - INSTALLATION, CONTROLLER	8E-9
ANTILOCK BRAKE - OPERATION, CONTROLLER	8E-9
ANTILOCK BRAKE - REMOVAL, CONTROLLER	8E-9
ANTILOCK BRAKES - DIAGNOSIS AND TESTING	5-37
A-PILLAR TRIM - INSTALLATION	23-158
A-PILLAR TRIM - REMOVAL	23-158
APPEARANCE TIPS - CLEANING	30-16
APPLICATION TABLE, SPECIFICATIONS - A/C	24-7
APPLIQUE - INSTALLATION, D-PILLAR	23-115
APPLIQUE - REMOVAL, D-PILLAR	23-115
AREA CARPET - INSTALLATION, CARGO	23-161
AREA CARPET - REMOVAL, CARGO	23-159
AREA LEAKS - DIAGNOSIS AND TESTING, REAR SEAL	9-128,9-9
ARM / ADJUSTER ASSEMBLY - CLEANING, ROCKER	9-26
ARM / ADJUSTER ASSEMBLY - DESCRIPTION, ROCKER	9-106,9-26,9-94
ARM / ADJUSTER ASSEMBLY - INSPECTION, ROCKER	9-27
ARM / ADJUSTER ASSEMBLY - INSTALLATION, ROCKER	9-106,9-27,9-95
ARM / ADJUSTER ASSEMBLY - OPERATION, ROCKER	9-26
ARM / ADJUSTER ASSEMBLY - REMOVAL, ROCKER	9-106,9-26,9-95
ARM - DESCRIPTION, FRONT WIPER	8R-12
ARM - DESCRIPTION, LOWER CONTROL	2-10, 2-17
ARM - DESCRIPTION, PITMAN	19-33
ARM - DESCRIPTION, REAR WIPER	8R-39
ARM - DESCRIPTION, UPPER CONTROL	2-15, 2-21
ARM - INSTALLATION, FRONT WIPER	8R-13
ARM - INSTALLATION, LOWER CONTROL	2-11, 2-18
ARM - INSTALLATION, PITMAN	19-33
ARM - INSTALLATION, REAR WIPER	8R-40
ARM - INSTALLATION, UPPER CONTROL	2-15, 2-22
ARM - OPERATION, FRONT WIPER	8R-13
ARM - OPERATION, LOWER CONTROL	2-10,2-18
ARM - OPERATION, PITMAN	19-33
ARM - OPERATION, REAR WIPER	8R-39
ARM - OPERATION, UPPER CONTROL	2-15,2-21
ARM - REMOVAL, FRONT WIPER	8R-13
ARM - REMOVAL, LOWER CONTROL	2-10,2-18
ARM - REMOVAL, PITMAN	19-33
ARM - REMOVAL, REAR WIPER	8R-40
ARM - REMOVAL, UPPER CONTROL	2-15,2-21
ARM, BUSHINGS, AND BALL JOINT - DESCRIPTION, UPPER SUSPENSION	2-20
ARM, BUSHINGS, AND BALL JOINT - OPERATION, UPPER SUSPENSION	2-20
ARM PARK RAMP - INSTALLATION, WIPER	8R-44
ARM PARK RAMP - REMOVAL, WIPER	8R-44
ASD SENSE - PCM INPUT - OPERATION	8I-3
ASSEMBLE, OIL PUMP	9-135
ASSEMBLY - ASSEMBLY, INPUT CLUTCH	21-303
ASSEMBLY - CLEANING, ROCKER ARM / ADJUSTER	9-26
ASSEMBLY - DESCRIPTION, INPUT CLUTCH	21-300
ASSEMBLY - DESCRIPTION, ROCKER ARM / ADJUSTER	9-106,9-26,9-94
ASSEMBLY - DESCRIPTION, TRANSMISSION SOLENOID/TRS	21-334
ASSEMBLY - DISASSEMBLY, INPUT CLUTCH	21-302
ASSEMBLY - INSPECTION, ROCKER ARM / ADJUSTER	9-27
ASSEMBLY - INSTALLATION, ROCKER ARM / ADJUSTER	9-106,9-27,9-95
ASSEMBLY - INSTALLATION, SEAT TRACK & RECLINER	23-176
ASSEMBLY - INSTALLATION, TRANSMISSION SOLENOID/TRS	21-335
ASSEMBLY - OPERATION, INPUT CLUTCH	21-300
ASSEMBLY - OPERATION, ROCKER ARM / ADJUSTER	9-26
ASSEMBLY - OPERATION, TRANSMISSION SOLENOID/TRS	21-334
ASSEMBLY - REMOVAL, ROCKER ARM / ADJUSTER	9-106,9-26,9-95
ASSEMBLY - REMOVAL, SEAT TRACK & RECLINER	23-176
ASSEMBLY - REMOVAL, TRANSMISSION SOLENOID/TRS	21-334
ASSEMBLY, 4C RETAINER/BULKHEAD	21-287
ASSEMBLY, AUTOMATIC TRANSMISSION - 42RE	21-99
ASSEMBLY, AUTOMATIC TRANSMISSION - 545RFE	21-254
ASSEMBLY, DIFFERENTIAL	3-113,3-41,3-75
ASSEMBLY, DIFFERENTIAL - TRAC-LOC™	3-79
ASSEMBLY, DIFFERENTIAL - TRAC-LOK™	3-117
ASSEMBLY, DOUBLE CARDAN UNIVERSAL JOINTS	3-11
ASSEMBLY, DRIVER AIRBAG	8O-16
ASSEMBLY, FRONT CLUTCH	21-142
ASSEMBLY, FRONT DISC BRAKE CALIPER	5-18
ASSEMBLY, FRONT SERVO	21-144
ASSEMBLY, HVAC HOUSING	24-44
ASSEMBLY, INPUT CLUTCH ASSEMBLY	21-303
ASSEMBLY, INSTRUMENT CLUSTER	8J-10
ASSEMBLY, LOW/REVERSE CLUTCH	21-312
ASSEMBLY, OIL PUMP	21-150,21-316
ASSEMBLY, OVERDRIVE UNIT	21-162
ASSEMBLY, OVERRUNNING CLUTCH CAM/OVERDRIVE PISTON RETAINER	21-173
ASSEMBLY, PLANETARY GEARTRAIN	21-323
ASSEMBLY, PLANETARY GEARTRAIN/ OUTPUT SHAFT	21-179
ASSEMBLY, POWER DISTRIBUTION CENTER - PDC & COMPONENTS	8W-11
ASSEMBLY, REAR CLUTCH	21-185
ASSEMBLY, REAR DISC BRAKE CALIPER	5-18
ASSEMBLY, REAR SERVO	21-188
ASSEMBLY, SINGLE CARDAN UNIVERSAL JOINTS	3-9
ASSEMBLY, TRANSFER CASE - NV242	21-18
ASSEMBLY, TRANSFER CASE - NV247	21-48
ASSEMBLY, VALVE BODY	21-230,21-340
ASSIST HANDLE - INSTALLATION	23-159
ASSIST HANDLE - REMOVAL	23-159
AUDIO - DESCRIPTION	8A-1
AUDIO - OPERATION	8A-2
AUDIO SYSTEM - DIAGNOSIS AND TESTING	8A-3
AUDIO SYSTEMS, SPECIAL TOOLS	8A-5
AUGAT - INSTALLATION, CONNECTOR	8W-8
AUGAT - REMOVAL, CONNECTOR	8W-8
AUTO HEADLAMP SENSOR - INSTALLATION	8L-5
AUTO HEADLAMP SENSOR - REMOVAL	8L-5
AUTO HEADLAMP SENSOR (AHL) - DIAGNOSIS AND TESTING	8L-5
AUTO SHUT DOWN RELAY - DESCRIPTION	8I-3
AUTO SHUT DOWN RELAY - INSTALLATION	8I-4
AUTO SHUT DOWN RELAY - REMOVAL	8I-3
AUTOMATIC DAY / NIGHT MIRROR - DIAGNOSIS AND TESTING	8N-12
AUTOMATIC DAY / NIGHT MIRROR - INSTALLATION	8N-13
AUTOMATIC DAY / NIGHT MIRROR - REMOVAL	8N-13
AUTOMATIC TRANSMISSION - 42RE - ASSEMBLY	21-99
AUTOMATIC TRANSMISSION - 42RE - CLEANING	21-98
AUTOMATIC TRANSMISSION - 42RE - DESCRIPTION	21-66
AUTOMATIC TRANSMISSION - 42RE - DISASSEMBLY	21-93
AUTOMATIC TRANSMISSION - 42RE - INSPECTION	21-98
AUTOMATIC TRANSMISSION - 42RE - INSTALLATION	21-105
AUTOMATIC TRANSMISSION - 42RE - OPERATION	21-68
AUTOMATIC TRANSMISSION - 42RE - REMOVAL	21-91
AUTOMATIC TRANSMISSION - 545RFE - ASSEMBLY	21-254
AUTOMATIC TRANSMISSION - 545RFE - CLEANING	21-253
AUTOMATIC TRANSMISSION - 545RFE - DESCRIPTION	21-242
AUTOMATIC TRANSMISSION - 545RFE - DISASSEMBLY	21-248
AUTOMATIC TRANSMISSION - 545RFE - INSPECTION	21-254
AUTOMATIC TRANSMISSION - 545RFE - INSTALLATION	21-261
AUTOMATIC TRANSMISSION - 545RFE - OPERATION	21-243
AUTOMATIC TRANSMISSION - 545RFE - REMOVAL	21-247
AUTOMATIC TRANSMISSION - DIAGNOSIS AND TESTING	21-243,21-71
AUTOMATIC TRANSMISSION FLUID - DESCRIPTION	0-4
AUTOMATIC TRANSMISSION FLUID - OPERATION	0-4
AUTOMATIC ZONE CONTROL SYSTEM - DIAGNOSIS AND TESTING	24-18
AXLE - 186FBI - ADJUSTMENTS, FRONT	3-22
AXLE - 186FBI - DESCRIPTION, FRONT	3-16
AXLE - 186FBI - INSTALLATION, FRONT	3-21
AXLE - 186FBI - OPERATION, FRONT	3-16
AXLE - 186FBI - REMOVAL, FRONT	3-21
AXLE - 198RBI - ADJUSTMENTS, REAR	3-55
AXLE - 198RBI - DESCRIPTION, REAR	3-49
AXLE - 198RBI - INSTALLATION, REAR	3-55
AXLE - 198RBI - OPERATION, REAR	3-49
AXLE - 198RBI - REMOVAL, REAR	3-54
AXLE - 226RBA - ADJUSTMENTS, REAR	3-93
AXLE - 226RBA - DESCRIPTION, REAR	3-87
AXLE - 226RBA - INSTALLATION, REAR	3-93
AXLE - 226RBA - OPERATION, REAR	3-87
AXLE - 226RBA - REMOVAL, REAR	3-92
AXLE - C/V JOINT - INSTALLATION	3-34
AXLE - C/V JOINT - REMOVAL	3-34
AXLE - DIAGNOSIS AND TESTING	3-17,3-50, 3-89
AXLE - INSTALLATION, FRONT TUBE	3-15
AXLE - REMOVAL, FRONT TUBE	3-15
AXLE - U-JOINT - INSTALLATION	3-36
AXLE - U-JOINT - REMOVAL	3-35
AXLE, 186FBI - FRONT	3-30
AXLE, 198RBI - REAR	3-64
AXLE, 226RBA - REAR	3-102
AXLE BEARINGS/SEALS - INSTALLATION	3-105, 3-67
AXLE BEARINGS/SEALS - REMOVAL	3-105,3-67
AXLE SHAFT SEALS - INSTALLATION	3-34
AXLE SHAFT SEALS - REMOVAL	3-34
AXLE SHAFTS - INSTALLATION	3-105,3-33,3-67

Description	Group-Page
AXLE SHAFTS - REMOVAL	3-105,3-33,3-67
AXLE, SPECIAL TOOLS	3-102,3-30,3-64
BACK - INSTALLATION, FRONT SEAT	23-174
BACK - INSTALLATION, REAR SEAT	23-178
BACK - REMOVAL, FRONT SEAT	23-174
BACK - REMOVAL, REAR SEAT	23-178
BACK COVER - INSTALLATION, FRONT SEAT	23-175
BACK COVER - INSTALLATION, REAR SEAT	23-179
BACK COVER - REMOVAL, FRONT SEAT	23-175
BACK COVER - REMOVAL, REAR SEAT	23-179
BACK LATCH / LOCK - INSTALLATION, FOLDING REAR SEAT	23-180
BACK LATCH / LOCK - REMOVAL, FOLDING REAR SEAT	23-180
BACK LATCH HANDLE - INSTALLATION, FOLDING REAR SEAT	23-180
BACK LATCH HANDLE - REMOVAL, FOLDING REAR SEAT	23-180
BACK LATCH/HINGE - INSTALLATION, FOLDING REAR SEAT	23-181
BACK LATCH/HINGE - REMOVAL, FOLDING REAR SEAT	23-181
BALANCE - STANDARD PROCEDURES, TIRE AND WHEEL	22-2
BALL JOINT - DESCRIPTION, UPPER SUSPENSION ARM, BUSHINGS	2-20
BALL JOINT - INSTALLATION, UPPER	2-21
BALL JOINT - OPERATION, UPPER SUSPENSION ARM, BUSHINGS	2-20
BALL JOINT - REMOVAL, LOWER	2-10
BALL JOINT - REMOVAL, UPPER	2-14,2-20
BAND OPERATION - DIAGNOSIS AND TESTING, AIR CHECKING TRANSMISSION CLUTCH	21-77
BANDS - ADJUSTMENT	21-126
BANDS - DESCRIPTION	21-125
BANDS - OPERATION	21-125
BAR - DESCRIPTION, STABILIZER	2-13,2-20
BAR - DESCRIPTION, TRACK	2-13
BAR - INSTALLATION, STABILIZER	2-13,2-20
BAR - INSTALLATION, TRACK	2-13
BAR - OPERATION, STABILIZER	2-13,2-20
BAR - OPERATION, TRACK	2-13
BAR - REMOVAL, STABILIZER	2-13,2-20
BAR - REMOVAL, TRACK	2-13
BASE - DESCRIPTION, BRAKES	5-2
BASE AND LEAD, ANTENNA BODY & CABLE - ANTENNA	8A-9
BASE BRAKE SYSTEM - DIAGNOSIS AND TESTING	5-2
BASE BRAKES, SPECIAL TOOLS	5-6
BASE COAT/CLEAR COAT FINISH - DESCRIPTION	23-170
BATTERIES - STANDARD PROCEDURE, RKE TRANSMITTER	8N-8
BATTERY - DESCRIPTION	8F-7
BATTERY - DIAGNOSIS AND TESTING	8F-8
BATTERY - INSPECTION	30-6
BATTERY - INSTALLATION	8F-18
BATTERY - OPERATION	8F-8
BATTERY - REMOVAL	8F-17
BATTERY CABLE - DESCRIPTION	8F-20
BATTERY CABLE - DIAGNOSIS AND TESTING	8F-21
BATTERY CABLE - INSTALLATION	8F-23
BATTERY CABLE - OPERATION	8F-21
BATTERY CABLE - REMOVAL	8F-23
BATTERY CHARGING - STANDARD PROCEDURE	8F-9
BATTERY ELECTROLYTE LEVEL - STANDARD PROCEDURE, CHECKING	8F-9
BATTERY HOLDDOWN - DESCRIPTION	8F-19
BATTERY HOLDDOWN - INSTALLATION	8F-19
BATTERY HOLDDOWN - OPERATION	8F-19
BATTERY HOLDDOWN - REMOVAL	8F-19
BATTERY SYSTEM - CLEANING	8F-5
BATTERY SYSTEM - DESCRIPTION	8F-1
BATTERY SYSTEM - DIAGNOSIS AND TESTING	8F-2
BATTERY SYSTEM - INSPECTION	8F-5
BATTERY SYSTEM - OPERATION	8F-2
BATTERY SYSTEM - SPECIFICATIONS	8F-6
BATTERY TEMPERATURE SENSOR - DESCRIPTION	8F-30
BATTERY TEMPERATURE SENSOR - INSTALLATION	8F-30
BATTERY TEMPERATURE SENSOR - OPERATION	8F-30
BATTERY TEMPERATURE SENSOR - REMOVAL	8F-30
BATTERY TRAY - DESCRIPTION	8F-25
BATTERY TRAY - INSTALLATION	8F-26
BATTERY TRAY - OPERATION	8F-25
BATTERY TRAY - REMOVAL	8F-25
BEAM INDICATOR - DESCRIPTION, HIGH	8J-20
BEAM INDICATOR - OPERATION, HIGH	8J-20
BEARING - DESCRIPTION, HUB	2-8
BEARING - FITTING - STANDARD PROCEDURE, CRANKSHAFT MAIN	9-114
BEARING - INSTALLATION, HUB	2-9
BEARING - INSTALLATION, OUTPUT SHAFT FRONT	21-152
BEARING - INSTALLATION, OUTPUT SHAFT REAR	21-152
BEARING - INSTALLATION, PITMAN	19-21
BEARING - OPERATION, HUB	2-8
BEARING - REMOVAL, HUB	2-8
BEARING - REMOVAL, OUTPUT SHAFT FRONT	21-151
BEARING - REMOVAL, OUTPUT SHAFT REAR	21-152
BEARING - REMOVAL, PITMAN	19-20
BEARING FITTING - STANDARD PROCEDURE, CONNECTING ROD	9-108
BEARINGS - DESCRIPTION, CAMSHAFT	9-30
BEARINGS - INSPECTION, CAMSHAFT	9-31
BEARINGS - INSPECTION, CRANKSHAFT MAIN	9-114,9-39
BEARINGS - INSTALLATION, CAMSHAFT	9-32
BEARINGS - INSTALLATION, CRANKSHAFT MAIN	9-40
BEARINGS - INSTALLATION, DIFFERENTIAL CASE	3-119,3-43,3-81
BEARINGS - REMOVAL, CAMSHAFT	9-30
BEARINGS - REMOVAL, CRANKSHAFT MAIN	9-39
BEARINGS - REMOVAL, DIFFERENTIAL CASE	3-119,3-42,3-81
BEARINGS - STANDARD PROCEDURE, FITTING CRANKSHAFT MAIN	9-36
BEARINGS - STANDARD PROCEDURES, FITTING CONNECTING ROD	9-33
BEARINGS/SEALS - INSTALLATION, AXLE	3-105, 3-67
BEARINGS/SEALS - REMOVAL, AXLE	3-105,3-67
BELT / CHAIN COVER(S) - INSTALLATION, TIMING	9-146,9-60
BELT / CHAIN COVER(S) - REMOVAL, TIMING	9-146,9-59
BELT - DIAGNOSIS AND TESTING, SERPENTINE DRIVE	7-18,7-21
BELT & RETRACTOR - INSTALLATION, FRONT SEAT	8O-19
BELT & RETRACTOR - INSTALLATION, REAR SEAT	8O-23
BELT & RETRACTOR - REMOVAL, FRONT SEAT	8O-18
BELT & RETRACTOR - REMOVAL, REAR SEAT	8O-22
BELT BUCKLE - INSTALLATION, FRONT SEAT	8O-20
BELT BUCKLE - INSTALLATION, REAR SEAT	8O-24
BELT BUCKLE - REMOVAL, FRONT SEAT	8O-19
BELT BUCKLE - REMOVAL, REAR SEAT	8O-24
BELT SWITCH - DESCRIPTION, SEAT	8O-25
BELT SWITCH - DIAGNOSIS AND TESTING, SEAT	8O-25
BELT SWITCH - OPERATION, SEAT	8O-25
BELT TURNING LOOP ADJUSTER - INSTALLATION, SEAT	8O-27
BELT TURNING LOOP ADJUSTER - REMOVAL, SEAT	8O-26
BELT WEATHERSTRIP - INSTALLATION, FRONT DOOR INNER	23-187
BELT WEATHERSTRIP - INSTALLATION, FRONT DOOR OUTER	23-188
BELT WEATHERSTRIP - INSTALLATION, REAR DOOR INNER	23-190
BELT WEATHERSTRIP - INSTALLATION, REAR DOOR OUTER	23-190
BELT WEATHERSTRIP - REMOVAL, FRONT DOOR INNER	23-187
BELT WEATHERSTRIP - REMOVAL, FRONT DOOR OUTER	23-188
BELT WEATHERSTRIP - REMOVAL, REAR DOOR INNER	23-190
BELT WEATHERSTRIP - REMOVAL, REAR DOOR OUTER	23-190
BELT/CHAIN AND SPROCKETS - INSPECTION, TIMING	9-147
BELT/CHAIN AND SPROCKETS - INSTALLATION, TIMING	9-148,9-61
BELT/CHAIN AND SPROCKETS - REMOVAL, TIMING	9-146,9-60
BELTS, RETRACTORS AND HEAD RESTRAINTS - INSPECTION, SEAT BELTS, SHOULDER	30-10
BELTS, SHOULDER BELTS, RETRACTORS AND HEAD RESTRAINTS - INSPECTION, SEAT	30-10
BETTS - INSTALLATION, CONNECTOR - THOMAS	8W-10
BETTS - REMOVAL, CONNECTOR - THOMAS	8W-9
BEZEL - DRIVER - INSTALLATION, INTRUMENT PANEL TRIM	23-154
BEZEL - DRIVER - REMOVAL, INTRUMENT PANEL TRIM	23-154
BEZEL - INSTALLATION, CLUSTER	23-135
BEZEL - INSTALLATION, INSTRUMENT PANEL LOWER RIGHT CENTER	23-150
BEZEL - LOWER - INSTALLATION, INSTRUMENT PANEL CENTER	23-146
BEZEL - LOWER - REMOVAL, INSTRUMENT PANEL CENTER	23-146
BEZEL - PASSENGER - INSTALLATION, INSTRUMENT PANEL TRIM	23-155
BEZEL - PASSENGER - REMOVAL, INSTRUMENT PANEL TRIM	23-155
BEZEL - REMOVAL, CLUSTER	23-135
BEZEL - REMOVAL, INSTRUMENT PANEL LOWER RIGHT CENTER	23-150
BEZEL - UPPER - INSTALLATION, INSTRUMENT PANEL CENTER	23-147
BEZEL - UPPER - REMOVAL, INSTRUMENT PANEL CENTER	23-147
BLADE - DESCRIPTION, FRONT WIPER	8R-14
BLADE - DESCRIPTION, REAR WIPER	8R-40
BLADE - INSTALLATION, FRONT WIPER	8R-14
BLADE - INSTALLATION, REAR WIPER	8R-42
BLADE - OPERATION, FRONT WIPER	8R-14
BLADE - OPERATION, REAR WIPER	8R-41
BLADE - REMOVAL, FRONT WIPER	8R-14
BLADE - REMOVAL, REAR WIPER	8R-41
BLEEDING - STANDARD PROCEDURE, MANUAL	5-4
BLEEDING - STANDARD PROCEDURE, PRESSURE	5-5
BLEEDING ABS BRAKE SYSTEM - STANDARD PROCEDURES	5-37
BLEEDING PROCEDURE - STANDARD PROCEDURE	5-22
BLEND DOOR - INSTALLATION	24-46
BLEND DOOR - REMOVAL	24-46
BLEND DOOR ACTUATOR - DESCRIPTION	24-30
BLEND DOOR ACTUATOR - INSTALLATION	24-31
BLEND DOOR ACTUATOR - REMOVAL	24-30
BLOCK - CLEANING, ENGINE	9-107,9-29
BLOCK - DESCRIPTION, BLOWER MOTOR RESISTOR	24-28
BLOCK - DESCRIPTION, ENGINE	9-107
BLOCK - DESCRIPTION, JUNCTION	8W-4
BLOCK - DIAGNOSIS AND TESTING, BLOWER MOTOR RESISTOR	24-28
BLOCK - INSPECTION, ENGINE	9-108,9-30
BLOCK - INSTALLATION, BLOWER MOTOR RESISTOR	24-28
BLOCK - INSTALLATION, JUNCTION	8W-6
BLOCK - OPERATION, BLOWER MOTOR RESISTOR	24-28
BLOCK - OPERATION, JUNCTION	8W-5
BLOCK - REMOVAL, BLOWER MOTOR RESISTOR	24-28
BLOCK - REMOVAL, JUNCTION	8W-5
BLOCK HEATER - DIAGNOSIS AND TESTING, ENGINE	7-33
BLOCK HEATER - OPERATION, ENGINE	7-33
BLOWER MOTOR - DESCRIPTION	24-37

Description	Group-Page
BLOWER MOTOR - DIAGNOSIS AND TESTING	24-37
BLOWER MOTOR - INSTALLATION	24-38
BLOWER MOTOR - OPERATION	24-37
BLOWER MOTOR - REMOVAL	24-38
BLOWER MOTOR CONTROLLER - DESCRIPTION	24-27
BLOWER MOTOR CONTROLLER - INSTALLATION	24-27
BLOWER MOTOR CONTROLLER - OPERATION	24-27
BLOWER MOTOR CONTROLLER - REMOVAL	24-27
BLOWER MOTOR RESISTOR BLOCK - DESCRIPTION	24-28
BLOWER MOTOR RESISTOR BLOCK - DIAGNOSIS AND TESTING	24-28
BLOWER MOTOR RESISTOR BLOCK - INSTALLATION	24-28
BLOWER MOTOR RESISTOR BLOCK - OPERATION	24-28
BLOWER MOTOR RESISTOR BLOCK - REMOVAL	24-28
BLOWER MOTOR SWITCH - DESCRIPTION	24-29
BLOWER MOTOR SWITCH - OPERATION	24-29
BLOWER MOTOR SWITCH - REMOVAL	24-29
BLOWER MOTOR SWITCH-MANUAL TEMPERATURE CONTROL SYSTEM - DIAGNOSIS AND TESTING	24-29
BODY - ADJUSTMENTS, VALVE	21-239
BODY - ASSEMBLY, VALVE	21-230,21-340
BODY & CABLE - ANTENNA BASE AND LEAD, ANTENNA	8A-9
BODY & CABLE - DESCRIPTION, ANTENNA	8A-6
BODY & CABLE - OPERATION, ANTENNA	8A-7
BODY - CLEANING, VALVE	21-229,21-338
BODY - DESCRIPTION	23-1
BODY - DESCRIPTION, THROTTLE	14-48
BODY - DESCRIPTION, VALVE	21-199,21-335
BODY - DISASSEMBLY, VALVE	21-217,21-337
BODY - INSPECTION, VALVE	21-229,21-338
BODY - INSTALLATION, VALVE	21-239,21-341
BODY - OPERATION	23-1
BODY - OPERATION, THROTTLE	14-48
BODY - OPERATION, VALVE	21-204,21-335
BODY - REMOVAL, VALVE	21-216,21-337
BODY CODE PLATE - DESCRIPTION	Intro.-1
BODY CONTROL MODULE - DIAGNOSIS AND TESTING	8E-6
BODY CONTROL/CENTRAL TIMER MODULE - DESCRIPTION	8E-2
BODY CONTROL/CENTRAL TIMER MODULE - INSTALLATION	8E-7
BODY CONTROL/CENTRAL TIMER MODULE - OPERATION	8E-4
BODY CONTROL/CENTRAL TIMER MODULE - REMOVAL	8E-6
BODY GAP AND FLUSH MEASUREMENTS, SPECIFICATIONS	23-87
BODY GROUND STRAP - INSTALLATION, ENGINE TO	8A-17
BODY LUBRICANTS, SPECIFICATIONS	23-4
BODY LUBRICATION - STANDARD PROCEDURES	23-3
BODY OPENING DIMENSIONS, SPECIFICATIONS	23-89
BODY SEALING - INSPECTION	30-8
BODY, SPECIAL TOOLS	23-92
BOOSTER - DESCRIPTION, POWER BRAKE	5-24
BOOSTER - DIAGNOSIS AND TESTING, MASTER CYLINDER/POWER	5-21
BOOSTER - INSTALLATION, POWER BRAKE	5-25
BOOSTER - OPERATION, POWER BRAKE	5-24
BOOSTER - REMOVAL, POWER BRAKE	5-24
BORE HONING - STANDARD PROCEDURE, CYLINDER	9-107,9-11
BOX - INSTALLATION, GLOVE	23-137
BOX - INSTALLATION, REAR STORAGE	23-168
BOX - REMOVAL, GLOVE	23-136
BOX - REMOVAL, REAR STORAGE	23-168
BOX LAMP/SWITCH - INSTALLATION, GLOVE	8L-35
BOX LAMP/SWITCH - REMOVAL, GLOVE	8L-34
BOX LATCH - INSTALLATION, GLOVE	23-137
BOX LATCH - REMOVAL, GLOVE	23-137
BOX LATCH STRIKER - INSTALLATION, GLOVE	23-139
BOX LATCH STRIKER - REMOVAL, GLOVE	23-138
BOX ROLL DOWN - STANDARD PROCEDURE, GLOVE	23-136
B-PILLAR DOOR SEAL - INSTALLATION	23-186
B-PILLAR DOOR SEAL - REMOVAL	23-186
B-PILLAR LOWER TRIM - INSTALLATION	23-159
B-PILLAR LOWER TRIM - REMOVAL	23-159
B-PILLAR UPPER TRIM - INSTALLATION	23-159
B-PILLAR UPPER TRIM - REMOVAL	23-159
BRACKET - INSTALLATION, HOOD AJAR SWITCH	8Q-10
BRACKET - INSTALLATION, INSTRUMENT PANEL C-CHANNEL COVER	23-145
BRACKET - INSTALLATION, INSTRUMENT PANEL CENTER FLOOR TUNNEL	23-148
BRACKET - INSTALLATION, INSTRUMENT PANEL COURTESY LAMP	23-149
BRACKET - INSTALLATION, INSTRUMENT PANEL INTERMEDIATE	23-150
BRACKET - INSTALLATION, INSTRUMENT PANEL PLENUM	23-152
BRACKET - INSTALLATION, INSTRUMENT PANEL STEERING COLUMN	23-152
BRACKET - INSTALLATION, INSTRUMENT PANEL STEERING COLUMN SUPPORT	23-153
BRACKET - INSTALLATION, REARVIEW MIRROR SUPPORT	23-168
BRACKET - REMOVAL, HOOD AJAR SWITCH	8Q-9
BRACKET - REMOVAL, INSTRUMENT PANEL C-CHANNEL COVER	23-145
BRACKET - REMOVAL, INSTRUMENT PANEL CENTER FLOOR TUNNEL	23-147
BRACKET - REMOVAL, INSTRUMENT PANEL COURTESY LAMP	23-148
BRACKET - REMOVAL, INSTRUMENT PANEL INTERMEDIATE	23-149
BRACKET - REMOVAL, INSTRUMENT PANEL PLENUM	23-151
BRACKET - REMOVAL, INSTRUMENT PANEL STEERING COLUMN	23-152
BRACKET - REMOVAL, INSTRUMENT PANEL STEERING COLUMN SUPPORT	23-153
BRAKE - DESCRIPTION, CONTROLLER ANTILOCK	8E-9
BRAKE - DESCRIPTION, ELECTRIC	5-38
BRAKE - DIAGNOSIS AND TESTING, PARKING	5-29
BRAKE - INSPECTION, PARKING	30-12
BRAKE - INSTALLATION, CONTROLLER ANTILOCK	8E-9
BRAKE - OPERATION, CONTROLLER ANTILOCK	8E-9
BRAKE - OPERATION, ELECTRIC	5-38
BRAKE - OPERATION, PARKING	5-28
BRAKE - REMOVAL, CONTROLLER ANTILOCK	8E-9
BRAKE BOOSTER - DESCRIPTION, POWER	5-24
BRAKE BOOSTER - INSTALLATION, POWER	5-25
BRAKE BOOSTER - OPERATION, POWER	5-24
BRAKE BOOSTER - REMOVAL, POWER	5-24
BRAKE CABLE - INSTALLATION, FRONT PARKING	5-31
BRAKE CABLE - REMOVAL, FRONT PARKING	5-29
BRAKE CABLES - INSTALLATION, REAR PARKING	5-32
BRAKE CABLES - REMOVAL, REAR PARKING	5-30
BRAKE CALIPER - ASSEMBLY, FRONT DISC	5-18
BRAKE CALIPER - ASSEMBLY, REAR DISC	5-18
BRAKE CALIPER - CLEANING, DISC	5-17
BRAKE CALIPER - DISASSEMBLY, FRONT DISC	5-14
BRAKE CALIPER - DISASSEMBLY, REAR DISC	5-16
BRAKE CALIPER - INSPECTION, DISC	5-17
BRAKE CALIPER - INSTALLATION, FRONT DISC	5-19
BRAKE CALIPER - INSTALLATION, REAR DISC	5-20
BRAKE CALIPER - REMOVAL, FRONT DISC	5-13
BRAKE CALIPER - REMOVAL, REAR DISC	5-14
BRAKE COMPONENTS, SPECIFICATIONS	5-5
BRAKE FLUID CONTAMINATION - DIAGNOSIS AND TESTING	5-20
BRAKE FLUID LEVEL SWITCH - INSTALLATION	5-7
BRAKE FLUID LEVEL SWITCH - REMOVAL	5-6
BRAKE FLUID, SPECIFICATIONS	5-20
BRAKE INDICATOR - DESCRIPTION, BRAKE/PARK	8J-14
BRAKE INDICATOR - DIAGNOSIS AND TESTING	8J-15
BRAKE INDICATOR - OPERATION, BRAKE/PARK	8J-14
BRAKE LAMP SWITCH - ADJUSTMENT	8L-6
BRAKE LAMP SWITCH - DESCRIPTION	8L-5
BRAKE LAMP SWITCH - DIAGNOSIS AND TESTING	8L-5
BRAKE LAMP SWITCH - INSTALLATION	8L-6
BRAKE LAMP SWITCH - OPERATION	8L-5
BRAKE LAMP SWITCH - REMOVAL	8L-6
BRAKE LINE AND HOSES - DIAGNOSIS AND TESTING	5-7
BRAKE LINES - DESCRIPTION	5-7
BRAKE ROTOR - DIAGNOSIS AND TESTING, REAR DISC	5-27
BRAKE ROTOR - DIAGNOSIS AND TETSING, FRONT DISC	5-26
BRAKE ROTOR - INSTALLATION, FRONT DISC	5-28
BRAKE ROTOR - INSTALLATION, REAR DISC	5-28
BRAKE ROTOR - REMOVAL, FRONT DISC	5-27
BRAKE ROTOR - REMOVAL, REAR DISC	5-28
BRAKE SHOE - ADJUSTMENTS, PARKING	5-35
BRAKE SHOES - DESCRIPTION, FRONT DISC	5-8
BRAKE SHOES - DESCRIPTION, REAR DISC	5-8
BRAKE SHOES - INSTALLATION, FRONT DISC	5-12
BRAKE SHOES - INSTALLATION, REAR DISC	5-12
BRAKE SHOES - OPERATION, FRONT DISC	5-9
BRAKE SHOES - OPERATION, REAR DISC	5-9
BRAKE SHOES - REMOVAL, FRONT DISC	5-10
BRAKE SHOES - REMOVAL, REAR DISC	5-10
BRAKE SYSTEM - DIAGNOSIS AND TESTING, BASE	5-2
BRAKE SYSTEM - STANDARD PROCEDURES, BLEEDING ABS	5-37
BRAKE TRANSMISSION SHIFT INTERLOCK - ADJUSTMENTS	21-129,21-291
BRAKE TRANSMISSION SHIFT INTERLOCK - DIAGNOSIS AND TESTING	21-127,21-290
BRAKE TRANSMISSION SHIFT INTERLOCK MECHANISM - DESCRIPTION	21-127,21-289
BRAKE TRANSMISSION SHIFT INTERLOCK MECHANISM - INSTALLATION	21-128,21-291
BRAKE TRANSMISSION SHIFT INTERLOCK MECHANISM - OPERATION	21-127, 21-289
BRAKE TRANSMISSION SHIFT INTERLOCK MECHANISM - REMOVAL	21-128, 21-290
BRAKE WARNING INDICATOR SWITCH - DESCRIPTION, RED	5-7
BRAKE WARNING INDICATOR SWITCH - OPERATION, RED	5-7
BRAKE WARNING LAMP - DIAGNOSIS AND TESTING, RED	5-7
BRAKE/PARK BRAKE INDICATOR - DESCRIPTION	8J-14
BRAKE/PARK BRAKE INDICATOR - OPERATION	8J-14
BRAKES - ABS - DESCRIPTION	5-36
BRAKES - ABS - OPERATION	5-36

Description	Group-Page
BRAKES - BASE - DESCRIPTION	5-2
BRAKES - DIAGNOSIS AND TESTING, ANTILOCK	5-37
BRAKES - INSPECTION, SERVICE	30-12
BRAKES, SPECIAL TOOLS - BASE	5-6
BREAK-IN - STANDARD PROCEDURE, COMPRESSOR CLUTCH	24-13
BUCKLE - INSTALLATION, FRONT SEAT BELT	8O-20
BUCKLE - INSTALLATION, REAR SEAT BELT	8O-24
BUCKLE - REMOVAL, FRONT SEAT BELT	8O-19
BUCKLE - REMOVAL, REAR SEAT BELT	8O-24
BUILT-IN INDICATOR TEST - STANDARD PROCEDURE	8F-12
BULB - INSTALLATION	8L-16,8L-20,8L-30,8L-31, 8L-32,8L-7
BULB - REMOVAL	8L-16,8L-20,8L-29,8L-31, 8L-32,8L-6
BULBS - INSTALLATION	8L-28,8L-29
BULBS - REMOVAL	8L-28
BUMPER - DESCRIPTION, JOUNCE	2-17,2-9
BUMPER - OPERATION, JOUNCE	2-17,2-9
BUMPERS - DESCRIPTION	13-1
BUMPERS - OPERATION	13-1
BURNT FLUID - DIAGNOSIS AND TESTING, CAUSES OF	21-136,21-292
BUSHING - INSTALLATION, EXTENSION HOUSING	21-135
BUSHING - REMOVAL, EXTENSION HOUSING	21-135
BUSHING AND SEAL - INSTALLATION, REAR RETAINER	21-62
BUSHING AND SEAL - NV242HD - INSTALLATION, REAR RETAINER	21-36
BUSHING AND SEAL - NV242HD - REMOVAL, REAR RETAINER	21-35
BUSHING AND SEAL - REMOVAL, REAR RETAINER	21-62
BUSHINGS - INSTALLATION	2-8
BUSHINGS - REMOVAL	2-8
BUSHINGS, AND BALL JOINT - DESCRIPTION, UPPER SUSPENSION ARM	2-20
BUSHINGS, AND BALL JOINT - OPERATION, UPPER SUSPENSION ARM	2-20
BYPASS - DESCRIPTION, WATER PUMP	7-47
BYPASS - OPERATION, WATER PUMP	7-48
CABLE - ADJUSTMENTS, GEARSHIFT	21-146, 21-297
CABLE - ADJUSTMENTS, TRANSMISSION THROTTLE VALVE	21-191
CABLE - ANTENNA BASE AND LEAD, ANTENNA BODY	8A-9
CABLE - DESCRIPTION	8P-3
CABLE - DESCRIPTION, ANTENNA BODY	8A-6
CABLE - DESCRIPTION, BATTERY	8F-20
CABLE - DESCRIPTION, THROTTLE VALVE	21-191
CABLE - DIAGNOSIS AND TESTING, BATTERY	8F-21
CABLE - DIAGNOSIS AND TESTING, GEARSHIFT	21-145,21-296
CABLE - INSTALLATION, BATTERY	8F-23
CABLE - INSTALLATION, FRONT PARKING BRAKE	5-31
CABLE - INSTALLATION, GEARSHIFT	21-146, 21-296
CABLE - INSTALLATION, INSTRUMENT PANEL ANTENNA	8A-13
CABLE - INSTALLATION, LATCH RELEASE	23-123
CABLE - INSTALLATION, SHIFT	21-36,21-63
CABLE - OPERATION	8P-3
CABLE - OPERATION, ANTENNA BODY	8A-7
CABLE - OPERATION, BATTERY	8F-21
CABLE - REMOVAL, BATTERY	8F-23
CABLE - REMOVAL, FRONT PARKING BRAKE	5-29
CABLE - REMOVAL, GEARSHIFT	21-145,21-296
CABLE - REMOVAL, INSTRUMENT PANEL ANTENNA	8A-13
CABLE - REMOVAL, LATCH RELEASE	23-123
CABLE - REMOVAL, SHIFT	21-36,21-63
CABLES - INSTALLATION, REAR PARKING BRAKE	5-32
CABLES - REMOVAL, REAR PARKING BRAKE	5-30
CALIBRATION - STANDARD PROCEDURE, COMPASS	8M-4
CALIPER - ASSEMBLY, FRONT DISC BRAKE	5-18
CALIPER - ASSEMBLY, REAR DISC BRAKE	5-18
CALIPER - CLEANING, DISC BRAKE	5-17
CALIPER - DISASSEMBLY, FRONT DISC BRAKE	5-14
CALIPER - DISASSEMBLY, REAR DISC BRAKE	5-16
CALIPER - INSPECTION, DISC BRAKE	5-17
CALIPER - INSTALLATION, FRONT DISC BRAKE	5-19
CALIPER - INSTALLATION, REAR DISC BRAKE	5-20
CALIPER - REMOVAL, FRONT DISC BRAKE	5-13
CALIPER - REMOVAL, REAR DISC BRAKE	5-14
CAM - DESCRIPTION, TURN SIGNAL CANCEL	8L-29
CAM - OPERATION, TURN SIGNAL CANCEL	8L-29
CAMBER - STANDARD PROCEDURE	2-4
CAM/OVERDRIVE PISTON RETAINER - ASSEMBLY, OVERRUNNING CLUTCH	21-173
CAM/OVERDRIVE PISTON RETAINER - CLEANING, OVERRUNNING CLUTCH	21-173
CAM/OVERDRIVE PISTON RETAINER - DESCRIPTION, OVERRUNNING CLUTCH	21-172
CAM/OVERDRIVE PISTON RETAINER - DISASSEMBLY, OVERRUNNING CLUTCH	21-172
CAM/OVERDRIVE PISTON RETAINER - INSPECTION, OVERRUNNING CLUTCH	21-173
CAM/OVERDRIVE PISTON RETAINER - OPERATION, OVERRUNNING CLUTCH	21-172
CAMSHAFT & BEARINGS - DESCRIPTION	9-30
CAMSHAFT - INSPECTION	9-32
CAMSHAFT - INSTALLATION	9-32
CAMSHAFT - REMOVAL	9-31
CAMSHAFT BEARINGS - INSPECTION	9-31
CAMSHAFT BEARINGS - INSTALLATION	9-32
CAMSHAFT BEARINGS - REMOVAL	9-30
CAMSHAFT(S) - LEFT - DESCRIPTION	9-87
CAMSHAFT(S) - LEFT - INSTALLATION	9-89
CAMSHAFT(S) - LEFT - REMOVAL	9-87
CAMSHAFT(S) - RIGHT - DESCRIPTION	9-99
CAMSHAFT(S) - RIGHT - INSTALLATION	9-100
CAMSHAFT(S) - RIGHT - REMOVAL	9-99
CANCEL CAM - DESCRIPTION, TURN SIGNAL	8L-29
CANCEL CAM - OPERATION, TURN SIGNAL	8L-29
CANISTER - DESCRIPTION, VAPOR	25-32
CANISTER - INSTALLATION, VAPOR	25-33
CANISTER - REMOVAL, VAPOR	25-32
CAP - CLEANING, RADIATOR PRESSURE	7-53
CAP - DESCRIPTION, FUEL FILLER	25-28
CAP - DESCRIPTION, RADIATOR PRESSURE	7-52
CAP - DIAGNOSIS AND TESTING, RADIATOR PRESSURE	7-53
CAP - INSPECTION, RADIATOR PRESSURE	7-53
CAP - INSTALLATION, INSTRUMENT PANEL END	23-140
CAP - OPERATION, FUEL FILLER	25-28
CAP - OPERATION, RADIATOR PRESSURE	7-53
CAP - REMOVAL, FUEL FILLER	25-28
CAP - REMOVAL, INSTRUMENT PANEL END	23-139
CAPACITIES - SPECIFICATIONS, FLUID	0-6
CAPACITOR - DESCRIPTION, IGNITION COIL	8I-12
CAPACITOR - INSTALLATION, IGNITION COIL	8I-13
CAPACITOR - OPERATION, IGNITION COIL	8I-12
CAPACITOR - REMOVAL, IGNITION COIL	8I-13
CAPACITY, SPECIFICATIONS - CHARGE	24-56
CAPACITY TEST - DIAGNOSIS AND TESTING, FUEL PUMP	14-9
CARDAN UNIVERSAL JOINTS - ASSEMBLY, DOUBLE	3-11
CARDAN UNIVERSAL JOINTS - ASSEMBLY, SINGLE	3-9
CARDAN UNIVERSAL JOINTS - DISASSEMBLY, DOUBLE	3-10
CARDAN UNIVERSAL JOINTS - DISASSEMBLY, SINGLE	3-9
CAREFUL NEW VEHICLE PREPARATION - DESCRIPTION, THE IMPORTANCE OF	30-1
CARGO AREA CARPET - INSTALLATION	23-161
CARGO AREA CARPET - REMOVAL	23-159
CARPET - INSTALLATION, CARGO AREA	23-161
CARPET - INSTALLATION, FRONT	23-161
CARPET - REMOVAL, CARGO AREA	23-159
CARPET - REMOVAL, FRONT	23-159
CASE - DESCRIPTION, TRANSFER	0-6
CASE - INSPECTION, TRANSMISSION/ TRANSFER	30-12
CASE - NV242 - ASSEMBLY, TRANSFER	21-18
CASE - NV242 - CLEANING, TRANSFER	21-13
CASE - NV242 - DESCRIPTION, TRANSFER	0-4
CASE - NV242 - DESCRIPTION, TRANSFER	21-1
CASE - NV242 - DIAGNOSIS AND TESTING, TRANSFER	21-2
CASE - NV242 - DISASSEMBLY, TRANSFER	21-3
CASE - NV242 - INSPECTION, TRANSFER	21-14
CASE - NV242 - INSTALLATION, TRANSFER	21-31
CASE - NV242 - OPERATION, TRANSFER	21-2
CASE - NV242 - REMOVAL, TRANSFER	21-3
CASE - NV247 - ASSEMBLY, TRANSFER	21-48
CASE - NV247 - CLEANING, TRANSFER	21-47
CASE - NV247 - DESCRIPTION, TRANSFER	0-4
CASE - NV247 - DESCRIPTION, TRANSFER	21-38
CASE - NV247 - DIAGNOSIS AND TESTING, TRANSFER	21-39
CASE - NV247 - DISASSEMBLY, TRANSFER	21-40
CASE - NV247 - INSPECTION, TRANSFER	21-47
CASE - NV247 - INSTALLATION, TRANSFER	21-58
CASE - NV247 - OPERATION, TRANSFER	21-38
CASE - NV247 - REMOVAL, TRANSFER	21-40
CASE BEARINGS - INSTALLATION, DIFFERENTIAL	3-119,3-43,3-81
CASE BEARINGS - REMOVAL, DIFFERENTIAL	3-119,3-42,3-81
CASE, NV242 - TRANSFER	21-32,21-33
CASE, NV247 - TRANSFER	21-59,21-60
CASE SKID PLATE - INSTALLATION, TRANSFER	13-8
CASE SKID PLATE - REMOVAL, TRANSFER	13-8
CASTER - STANDARD PROCEDURE	2-4
CATALYTIC CONVERTER - 4.0L - INSPECTION	11-5
CATALYTIC CONVERTER - 4.0L - INSTALLATION	11-5
CATALYTIC CONVERTER - 4.0L - REMOVAL	11-5
CATALYTIC CONVERTER - 4.7L - INSPECTION	11-7
CATALYTIC CONVERTER - 4.7L - INSTALLATION	11-7
CATALYTIC CONVERTER - 4.7L - REMOVAL	11-6
CATALYTIC CONVERTER - DESCRIPTION	11-6
CATALYTIC CONVERTER 4.0L ENGINE - DESCRIPTION	11-4
CATCH - INSPECTION, HOOD LATCH/ SAFETY	30-3
CAUSES OF BURNT FLUID - DIAGNOSIS AND TESTING	21-136,21-292
CAUTIONS - STANDARD PROCEDURES, SERVICE WARNINGS	2-6
CAUTIONS, COLUMN - SERVICE WARNINGS	19-6
C-CHANNEL COVER BRACKET - INSTALLATION, INSTRUMENT PANEL	23-145
C-CHANNEL COVER BRACKET - REMOVAL, INSTRUMENT PANEL	23-145
CCV SYSTEM - 4.0L - DIAGNOSIS AND TESTING	25-26
CCV SYSTEM - DESCRIPTION	25-24

Description	Group-Page
CCV SYSTEM - OPERATION, 4.0L	25-24
CD CHANGER - DESCRIPTION	8A-10
CD CHANGER - DIAGNOSIS AND TESTING	8A-11
CD CHANGER - INSTALLATION	8A-13
CD CHANGER - OPERATION	8A-11
CD CHANGER - REMOVAL	8A-12
CD PLAYER - INSPECTION, RADIO, TAPE PLAYER AND/OR	30-13
CENTER - DESCRIPTION, ELECTRONIC VEHICLE INFO	8M-6
CENTER - DESCRIPTION, POWER DISTRIBUTION	8W-7
CENTER - DIAGNOSIS & TESTING–ELECTRONIC VEHICLE INFORMATION CENTER, ELECTRONIC VEHICLE INFO	8M-8
CENTER - INSTALLATION, ELECTRONIC VEHICLE INFO	8M-9
CENTER - INSTALLATION, POWER DISTRIBUTION	8W-12
CENTER - OPERATION, ELECTRONIC VEHICLE INFO	8M-8
CENTER - OPERATION, POWER DISTRIBUTION	8W-8
CENTER - PDC & COMPONENTS ASSEMBLY, POWER DISTRIBUTION	8W-11
CENTER - PDC & COMPONENTS DISASSEMBLY, POWER DISTRIBUTION	8W-8
CENTER - REMOVAL, ELECTRONIC VEHICLE INFO	8M-9
CENTER - REMOVAL, POWER DISTRIBUTION	8W-8
CENTER BEZEL - INSTALLATION, INSTRUMENT PANEL LOWER RIGHT	23-150
CENTER BEZEL - LOWER - INSTALLATION, INSTRUMENT PANEL	23-146
CENTER BEZEL - LOWER - REMOVAL, INSTRUMENT PANEL	23-146
CENTER BEZEL - REMOVAL, INSTRUMENT PANEL LOWER RIGHT	23-150
CENTER BEZEL - UPPER - INSTALLATION, INSTRUMENT PANEL	23-147
CENTER BEZEL - UPPER - REMOVAL, INSTRUMENT PANEL	23-147
CENTER, ELECTRONIC VEHICLE INFO CENTER - DIAGNOSIS & TESTING–ELECTRONIC VEHICLE INFORMATION	8M-8
CENTER FLOOR TUNNEL BRACKET - INSTALLATION, INSTRUMENT PANEL	23-148
CENTER FLOOR TUNNEL BRACKET - REMOVAL, INSTRUMENT PANEL	23-147
CENTER PROGRAMMING - STANDARD PROCEDURE, ELECTRONIC VEHICLE INFORMATION	8M-2
CENTERING - STANDARD PROCEDURE, CLOCKSPRING	8O-10
CERTIFICATION LABEL - DESCRIPTION, VEHICLE SAFETY	Intro.-10
CHAIN COVER(S) - INSTALLATION, TIMING BELT	9-146,9-60
CHAIN COVER(S) - REMOVAL, TIMING BELT	9-146,9-59
CHAIN WEAR - STANDARD PROCEDURE, MEASURING TIMING	9-143
CHANGER - DESCRIPTION, CD	8A-10
CHANGER - DIAGNOSIS AND TESTING, CD	8A-11
CHANGER - INSTALLATION, CD	8A-13
CHANGER - OPERATION, CD	8A-11
CHANGER - REMOVAL, CD	8A-12
CHANNEL - INSTALLATION, GLASS RUN	23-101
CHANNEL - REMOVAL, GLASS RUN	23-101
CHARGE - STANDARD PROCEDURE, REFRIGERANT SYSTEM	24-55
CHARGE CAPACITY, SPECIFICATIONS	24-56
CHARGING - DESCRIPTION	8F-28
CHARGING - OPERATION	8F-28
CHARGING - STANDARD PROCEDURE, BATTERY	8F-9
CHARGING SYSTEM - DIAGNOSIS AND TESTING	8F-28
CHART - DIAGNOSIS AND TESTING, COOLING SYSTEM DIAGNOSIS	7-5
CHART, SPECIFICATIONS - TORQUE	5-37,5-6
CHART, SPECIFICATIONS - TORQUE	19-10, 19-32,19-39
CHART, SPECIFICATIONS - TORQUE	2-17,2-6
CHART, SPECIFICATIONS - TORQUE	22-10
CHARTS - DIAGNOSIS AND TESTING, DIAGNOSIS	21-78
CHARTS - DIAGNOSIS AND TESTING, POWER STEERING SYSTEM DIAGNOSIS	19-2
CHECK - STANDARD PROCEDURE, FLUID LEVEL	21-136
CHECK - STANDARD PROCEDURES, FLUID LEVEL	21-294
CHECK - STANDARD PROCEDURES, OIL PUMP VOLUME	21-147,21-315
CHECK GAUGES INDICATOR - DESCRIPTION	8J-16
CHECK GAUGES INDICATOR - OPERATION	8J-16
CHECK OUT, FINAL STEPS - OWNER	30-17
CHECK STRAP - INSTALLATION	23-107,23-99
CHECK STRAP - REMOVAL	23-107,23-99
CHECK VALVE - DESCRIPTION, FRONT	8R-8
CHECK VALVE - DESCRIPTION, VACUUM	24-34
CHECK VALVE - INSTALLATION, FRONT	8R-9
CHECK VALVE - INSTALLATION, VACUUM	24-35
CHECK VALVE - OPERATION, FRONT	8R-8
CHECK VALVE - OPERATION, VACUUM	24-34
CHECK VALVE - REMOVAL, FRONT	8R-9
CHECK VALVE - REMOVAL, VACUUM	24-35
CHECKING BATTERY ELECTROLYTE LEVEL - STANDARD PROCEDURE	8F-9
CHECKING TRANSMISSION CLUTCH AND BAND OPERATION - DIAGNOSIS AND TESTING, AIR	21-77
CHECKING TRANSMISSION CLUTCH OPERATION - DIAGNOSIS AND TESTING, AIR	21-246
CHECKS - DIAGNOSIS AND TESTING, PRELIMINARY	7-4
CHILD TETHER - INSTALLATION	8O-8
CHILD TETHER - REMOVAL	8O-8
CHIME WARNING SYSTEM - DESCRIPTION	8B-1
CHIME WARNING SYSTEM - DIAGNOSIS AND TESTING	8B-3
CHIME WARNING SYSTEM - OPERATION	8B-2
CHMSL - INSTALLATION	8L-7
CHMSL - REMOVAL	8L-7
CIGAR LIGHTER OUTLET - DESCRIPTION	8W-2
CIGAR LIGHTER OUTLET - DIAGNOSIS & TESTING	8W-2
CIGAR LIGHTER OUTLET - OPERATION	8W-2
CIGAR LIGHTER OUTLET DOOR SPRING - INSTALLATION	8W-3
CIGAR LIGHTER OUTLET DOOR SPRING - REMOVAL	8W-3
CIRCUIT - DIAGNOSIS AND TESTING, AMBIENT TEMPERATURE SENSOR	8M-11
CIRCUIT ACTUATION TEST MODE - OPERATION	25-2
CIRCUIT SENSE - DESCRIPTION, IGNITION	8E-18
CIRCUIT SENSE - OPERATION, IGNITION	8E-19
CIRCUITS - DESCRIPTION, NON-MONITORED	25-19
CLAMPS - DESCRIPTION, HOSE	7-3
CLAMPS - OPERATION, HOSE	7-4
CLEANING, APPEARANCE TIPS	30-16
CLEANING, AUTOMATIC TRANSMISSION - 42RE	21-98
CLEANING, AUTOMATIC TRANSMISSION - 545RFE	21-253
CLEANING, BATTERY SYSTEM	8F-5
CLEANING, CYLINDER HEAD	9-20
CLEANING, CYLINDER HEAD - LEFT	9-85
CLEANING, CYLINDER HEAD - RIGHT	9-98
CLEANING, CYLINDER HEAD COVER(S)	9-23
CLEANING, CYLINDER HEAD COVER(S) - LEFT	9-92
CLEANING, CYLINDER HEAD COVER(S) - RIGHT	9-103
CLEANING, DISC BRAKE CALIPER	5-17
CLEANING, ENGINE BLOCK	9-107,9-29
CLEANING, EXHAUST MANIFOLD - LEFT	9-138
CLEANING, EXHAUST MANIFOLD - RIGHT	9-139
CLEANING, FRONT SERVO	21-144
CLEANING, FRONT WIPER & WASHER SYSTEM	8R-7
CLEANING, HYDRAULIC LIFTERS	9-43
CLEANING, INTAKE MANIFOLD	9-136
CLEANING, LOW/REVERSE CLUTCH	21-312
CLEANING, OIL PAN	9-132
CLEANING, OIL PUMP	9-133
CLEANING, OIL PUMP	21-150,21-315
CLEANING, OVERDRIVE UNIT	21-161
CLEANING, OVERRUNNING CLUTCH CAM/OVERDRIVE PISTON RETAINER	21-173
CLEANING, PISTON & CONNECTING ROD	9-119
CLEANING, PLANETARY GEARTRAIN	21-323
CLEANING, RADIATOR - 4.0L	7-46
CLEANING, RADIATOR - 4.7L	7-43
CLEANING, RADIATOR FAN - 4.0L	7-32
CLEANING, RADIATOR FAN - 4.7L	7-29
CLEANING, RADIATOR PRESSURE CAP	7-53
CLEANING, REAR CLUTCH	21-184
CLEANING, REAR SERVO	21-187
CLEANING, REAR WIPER & WASHER SYSTEM	8R-34
CLEANING, ROCKER ARM / ADJUSTER ASSEMBLY	9-26
CLEANING, SPARK PLUG	8I-16
CLEANING, TIRES	22-8
CLEANING, TRANSFER CASE - NV242	21-13
CLEANING, TRANSFER CASE - NV247	21-47
CLEANING, VALVE BODY	21-229,21-338
CLEANING, WATER PUMP - 4.0L	7-52
CLEANING, WATER PUMP - 4.7L	7-49
CLOCKSPRING - DESCRIPTION	8O-9
CLOCKSPRING - INSTALLATION	8O-12
CLOCKSPRING - OPERATION	8O-9
CLOCKSPRING - REMOVAL	8O-10
CLOCKSPRING CENTERING - STANDARD PROCEDURE	8O-10
CLUSTER - ASSEMBLY, INSTRUMENT	8J-10
CLUSTER - DESCRIPTION, INSTRUMENT	8J-2
CLUSTER - DIAGNOSIS AND TESTING, INSTRUMENT	8J-5
CLUSTER - DISASSEMBLY, INSTRUMENT	8J-8
CLUSTER - INSTALLATION, INSTRUMENT	8J-12
CLUSTER - OPERATION, INSTRUMENT	8J-3
CLUSTER - REMOVAL, INSTRUMENT	8J-7
CLUSTER BEZEL - INSTALLATION	23-135
CLUSTER BEZEL - REMOVAL	23-135
CLUTCH - 4.0L - DESCRIPTION, FAN DRIVE VISCOUS	7-39
CLUTCH - 4.0L - OPERATION, FAN DRIVE VISCOUS	7-40
CLUTCH - ASSEMBLY, FRONT	21-142
CLUTCH - ASSEMBLY, LOW/REVERSE	21-312
CLUTCH - ASSEMBLY, REAR	21-185
CLUTCH - CLEANING, LOW/REVERSE	21-312
CLUTCH - CLEANING, REAR	21-184
CLUTCH - DESCRIPTION, A/C COMPRESSOR	24-13
CLUTCH - DESCRIPTION, FRONT	21-139
CLUTCH - DESCRIPTION, OVERDRIVE	21-152
CLUTCH - DESCRIPTION, REAR	21-183
CLUTCH - DISASSEMBLY, FRONT	21-141
CLUTCH - DISASSEMBLY, LOW/REVERSE	21-311
CLUTCH - DISASSEMBLY, REAR	21-184
CLUTCH - INSPECTION, A/C COMPRESSOR	24-14
CLUTCH - INSPECTION, FRONT	21-141
CLUTCH - INSPECTION, LOW/REVERSE	21-312
CLUTCH - INSPECTION, REAR	21-185
CLUTCH - INSTALLATION, A/C COMPRESSOR	24-15
CLUTCH - OPERATION, A/C COMPRESSOR	24-13
CLUTCH - OPERATION, FRONT	21-139
CLUTCH - OPERATION, OVERDRIVE	21-152
CLUTCH - OPERATION, REAR	21-183
CLUTCH - REMOVAL, A/C COMPRESSOR	24-14
CLUTCH AND BAND OPERATION - DIAGNOSIS AND TESTING, AIR CHECKING TRANSMISSION	21-77
CLUTCH ASSEMBLY - ASSEMBLY, INPUT	21-303
CLUTCH ASSEMBLY - DESCRIPTION, INPUT	21-300
CLUTCH ASSEMBLY - DISASSEMBLY, INPUT	21-302
CLUTCH ASSEMBLY - OPERATION, INPUT	21-300
CLUTCH BREAK-IN - STANDARD PROCEDURE, COMPRESSOR	24-13

Description	Group-Page
CLUTCH CAM/OVERDRIVE PISTON RETAINER - ASSEMBLY, OVERRUNNING	21-173
CLUTCH CAM/OVERDRIVE PISTON RETAINER - CLEANING, OVERRUNNING	21-173
CLUTCH CAM/OVERDRIVE PISTON RETAINER - DESCRIPTION, OVERRUNNING	21-172
CLUTCH CAM/OVERDRIVE PISTON RETAINER - DISASSEMBLY, OVERRUNNING	21-172
CLUTCH CAM/OVERDRIVE PISTON RETAINER - INSPECTION, OVERRUNNING	21-173
CLUTCH CAM/OVERDRIVE PISTON RETAINER - OPERATION, OVERRUNNING	21-172
CLUTCH COIL - DIAGNOSIS AND TESTING, COMPRESSOR	24-13
CLUTCH OPERATION - DIAGNOSIS AND TESTING, AIR CHECKING TRANSMISSION	21-246
CLUTCH RELAY - DESCRIPTION, A/C COMPRESSOR	24-16
CLUTCH RELAY - DIAGNOSIS AND TESTING, A/C COMPRESSOR	24-16
CLUTCH RELAY - INSTALLATION, A/C COMPRESSOR	24-17
CLUTCH RELAY - OPERATION, A/C COMPRESSOR	24-16
CLUTCH RELAY - REMOVAL, A/C COMPRESSOR	24-17
CLUTCHES - DESCRIPTION, HOLDING	21-298
CLUTCHES - OPERATION, HOLDING	21-298
COAT FINISH - DESCRIPTION, BASE COAT/CLEAR	23-170
COAT/CLEAR COAT FINISH - DESCRIPTION, BASE	23-170
CODE - DESCRIPTION, PAINT	23-170
CODE PLATE - DESCRIPTION, BODY	Intro.-1
CODES - DESCRIPTION, DIAGNOSTIC TROUBLE	25-2
CODES, SPECIFICATIONS - 2001 WJ PAINT COLOR	23-170
COIL - DESCRIPTION, IGNITION	8I-10
COIL - DIAGNOSIS AND TESTING, COMPRESSOR CLUTCH	24-13
COIL - INSTALLATION, IGNITION	8I-12
COIL - OPERATION, IGNITION	8I-10
COIL - REMOVAL, IGNITION	8I-11
COIL CAPACITOR - DESCRIPTION, IGNITION	8I-12
COIL CAPACITOR - INSTALLATION, IGNITION	8I-13
COIL CAPACITOR - OPERATION, IGNITION	8I-12
COIL CAPACITOR - REMOVAL, IGNITION	8I-13
COIL RAIL - DESCRIPTION	8I-8
COIL RAIL - INSTALLATION	8I-10
COIL RAIL - OPERATION	8I-9
COIL RAIL - REMOVAL	8I-9
COIL RESISTANCE, 4.0L ENGINE - IGNITION	8I-2
COIL RESISTANCE, 4.7L V-8 ENGINE - IGNITION	8I-2
COLLAPSIBLE SPACER - INSTALLATION	3-109, 3-38,3-72
COLLAPSIBLE SPACER - REMOVAL	3-109,3-37, 3-71
COLOR CODES, SPECIFICATIONS - 2001 WJ PAINT	23-170
COLUMN - INSTALLATION	19-8
COLUMN - REMOVAL	19-6
COLUMN - SERVICE WARNINGS AND CAUTIONS	19-6
COLUMN BRACKET - INSTALLATION, INSTRUMENT PANEL STEERING	23-152
COLUMN BRACKET - REMOVAL, INSTRUMENT PANEL STEERING	23-152
COLUMN OPENING COVER - INSTALLATION, STEERING	23-157
COLUMN OPENING COVER - REMOVAL, STEERING	23-156
COLUMN, SPECIAL TOOLS - STEERING	19-11
COLUMN SUPPORT BRACKET - INSTALLATION, INSTRUMENT PANEL STEERING	23-153
COLUMN SUPPORT BRACKET - REMOVAL, INSTRUMENT PANEL STEERING	23-153
COMBINATION FLASHER - DESCRIPTION	8L-7
COMBINATION FLASHER - INSTALLATION	8L-10
COMBINATION FLASHER - OPERATION	8L-8
COMBINATION FLASHER - REMOVAL	8L-9
COMBUSTION PRESSURE LEAKAGE - DIAGNOSIS AND TESTING, CYLINDER	9-70,9-8
COMMUNICATION - DESCRIPTION	8E-7
COMMUNICATION - OPERATION	8E-8
COMPASS - INSPECTION	30-9
COMPASS CALIBRATION - STANDARD PROCEDURE	8M-4
COMPASS DEMAGNETIZING - STANDARD PROCEDURE	8M-3
COMPASS VARIATION ADJUSTMENT - STANDARD PROCEDURE	8M-4
COMPRESSION PRESSURE - DIAGNOSIS AND TESTING, CYLINDER	9-8
COMPRESSION PRESSURE TEST - DIAGNOSIS AND TESTING, CYLINDER	9-69
COMPRESSOR - DESCRIPTION, A/C	24-56
COMPRESSOR - INSTALLATION, A/C	24-58
COMPRESSOR - OPERATION, A/C	24-57
COMPRESSOR - REMOVAL, A/C	24-58
COMPRESSOR CLUTCH - DESCRIPTION, A/C	24-13
COMPRESSOR CLUTCH - INSPECTION, A/C	24-14
COMPRESSOR CLUTCH - INSTALLATION, A/C	24-15
COMPRESSOR CLUTCH - OPERATION, A/C	24-13
COMPRESSOR CLUTCH - REMOVAL, A/C	24-14
COMPRESSOR CLUTCH BREAK-IN - STANDARD PROCEDURE	24-13
COMPRESSOR CLUTCH COIL - DIAGNOSIS AND TESTING	24-13
COMPRESSOR CLUTCH RELAY - DESCRIPTION, A/C	24-16
COMPRESSOR CLUTCH RELAY - DIAGNOSIS AND TESTING, A/C	24-16
COMPRESSOR CLUTCH RELAY - INSTALLATION, A/C	24-17
COMPRESSOR CLUTCH RELAY - OPERATION, A/C	24-16
COMPRESSOR CLUTCH RELAY - REMOVAL, A/C	24-17
COMPRESSOR NOISE - DIAGNOSIS AND TESTING	24-57
COMPUTER/MAINTENANCE REMINDER - INSPECTION, TRIP	30-13
CONDENSER - DESCRIPTION, A/C	24-59
CONDENSER - INSTALLATION, A/C	24-60
CONDENSER - OPERATION, A/C	24-59
CONDENSER - REMOVAL, A/C	24-60
CONDITIONER - DESCRIPTION, HEATER AND AIR	24-1
CONDITIONER - INSPECTION, HEATER/AIR	30-13
CONDITIONER - OPERATION, HEATER AND AIR	24-1
CONDITIONS - DIAGNOSIS AND TESTING, SPARK PLUG	8I-13
CONNECT FITTING - DESCRIPTION, QUICK	14-22
CONNECTING ROD - CLEANING, PISTON	9-119
CONNECTING ROD - DESCRIPTION, PISTON	9-117,9-44
CONNECTING ROD - INSPECTION, PISTON	9-119
CONNECTING ROD - INSTALLATION, PISTON	9-119,9-46
CONNECTING ROD - REMOVAL, PISTON	9-118, 9-45
CONNECTING ROD BEARING FITTING - STANDARD PROCEDURE	9-108
CONNECTING ROD BEARINGS - STANDARD PROCEDURES, FITTING	9-33
CONNECTOR - AUGAT - INSTALLATION	8W-8
CONNECTOR - AUGAT - REMOVAL	8W-8
CONNECTOR - DESCRIPTION, DATA LINK	8E-10
CONNECTOR - DESCRIPTION, IGNITION-OFF DRAW WIRE HARNESS	8W-17
CONNECTOR - MOLEX - INSTALLATION	8W-9
CONNECTOR - MOLEX - REMOVAL	8W-9
CONNECTOR - OPERATION, DATA LINK	8E-10
CONNECTOR - OPERATION, IGNITION-OFF DRAW WIRE HARNESS	8W-18
CONNECTOR - THOMAS AND BETTS - INSTALLATION	8W-10
CONNECTOR - THOMAS AND BETTS - REMOVAL	8W-9
CONNECTOR/GROUND LOCATIONS - DESCRIPTION	8W-1
CONSOLE - DESCRIPTION, OVERHEAD	8M-1
CONSOLE - INSTALLATION, FLOOR	23-165
CONSOLE - INSTALLATION, OVERHEAD	8M-5
CONSOLE - OPERATION, OVERHEAD	8M-1
CONSOLE - REMOVAL, FLOOR	23-164
CONSOLE - REMOVAL, OVERHEAD	8M-5
CONSOLE SYSTEMS, SPECIAL TOOLS - OVERHEAD	8M-6
CONTAINER - DESCRIPTION, COOLANT RECOVERY PRESS	7-27
CONTAMINATION - DIAGNOSIS AND TESTING, BRAKE FLUID	5-20
CONTAMINATION - DIAGNOSIS AND TESTING, FLUID	21-136,21-293
CONTINUITY - STANDARD PROCEDURE, TESTING	8W-6
CONTROL - DESCRIPTION, A/C HEATER	24-17
CONTROL - DESCRIPTION, IGNITION	8I-1
CONTROL - DESCRIPTION, SPEED	8P-1
CONTROL - INSPECTION, SPEED	30-13
CONTROL - INSTALLATION, A/C HEATER	24-25
CONTROL - OPERATION, A/C HEATER	24-17
CONTROL - OPERATION, IGNITION	8I-1
CONTROL - OPERATION, SPEED	8P-1
CONTROL - REMOVAL, A/C HEATER	24-24
CONTROL - TORQUE, SPEED	8P-2
CONTROL ARM - DESCRIPTION, LOWER	2-10,2-17
CONTROL ARM - DESCRIPTION, UPPER	2-15,2-21
CONTROL ARM - INSTALLATION, LOWER	2-11,2-18
CONTROL ARM - INSTALLATION, UPPER	2-15,2-22
CONTROL ARM - OPERATION, LOWER	2-10,2-18
CONTROL ARM - OPERATION, UPPER	2-15,2-21
CONTROL ARM - REMOVAL, LOWER	2-10,2-18
CONTROL ARM - REMOVAL, UPPER	2-15,2-21
CONTROL MODULE - 4.0L - DESCRIPTION, PWM FAN	7-40
CONTROL MODULE - 4.0L - INSTALLATION, PWM FAN	7-42
CONTROL MODULE - 4.0L - OPERATION, PWM FAN	7-40
CONTROL MODULE - 4.0L - REMOVAL, PWM FAN	7-41
CONTROL MODULE - DESCRIPTION, AIRBAG	8O-6
CONTROL MODULE - DESCRIPTION, TRANSMISSION	8E-23
CONTROL MODULE - DIAGNOSIS AND TESTING, BODY	8E-6
CONTROL MODULE - INSTALLATION, AIRBAG	8O-8
CONTROL MODULE - INSTALLATION, POWERTRAIN	8E-21
CONTROL MODULE - MODES OF OPERATION, POWERTRAIN	8E-16
CONTROL MODULE - OPERATION, AIRBAG	8O-6
CONTROL MODULE - OPERATION, TRANSMISSION	8E-23
CONTROL MODULE - REMOVAL, AIRBAG	8O-7
CONTROL MODULE - REMOVAL, POWERTRAIN	8E-20
CONTROL MOTOR - DESCRIPTION, IDLE AIR	14-40
CONTROL MOTOR - OPERATION, IDLE AIR	14-40
CONTROL RELAY - DESCRIPTION, TRANSMISSION	21-333
CONTROL RELAY - OPERATION, TRANSMISSION	21-333
CONTROL SWITCH - DESCRIPTION, LUMBAR	8N-23
CONTROL SWITCH - INSTALLATION, LUMBAR	8N-24
CONTROL SWITCH - OPERATION, LUMBAR	8N-23

Description	Group-Page
CONTROL SWITCH - REMOVAL, LUMBAR	8N-23
CONTROL SYSTEM - DESCRIPTION, EMISSION	25-1
CONTROL SYSTEM - DESCRIPTION, EVAPORATION	25-23
CONTROL SYSTEM - DIAGNOSIS AND TESTING, AUTOMATIC ZONE	24-18
CONTROL SYSTEM - DIAGNOSIS AND TESTING, BLOWER MOTOR SWITCH-MANUAL TEMPERATURE	24-29
CONTROL/CENTRAL TIMER MODULE - DESCRIPTION, BODY	8E-2
CONTROL/CENTRAL TIMER MODULE - INSTALLATION, BODY	8E-7
CONTROL/CENTRAL TIMER MODULE - OPERATION, BODY	8E-4
CONTROL/CENTRAL TIMER MODULE - REMOVAL, BODY	8E-6
CONTROLLER - DESCRIPTION, BLOWER MOTOR	24-27
CONTROLLER - INSTALLATION, BLOWER MOTOR	24-27
CONTROLLER - OPERATION, BLOWER MOTOR	24-27
CONTROLLER - REMOVAL, BLOWER MOTOR	24-27
CONTROLLER ANTILOCK BRAKE - DESCRIPTION	8E-9
CONTROLLER ANTILOCK BRAKE - INSTALLATION	8E-9
CONTROLLER ANTILOCK BRAKE - OPERATION	8E-9
CONTROLLER ANTILOCK BRAKE - REMOVAL	8E-9
CONTROLS - DIAGNOSIS AND TESTING, OVERDRIVE ELECTRICAL	21-153
CONVERTER - 4.0L - INSPECTION, CATALYTIC	11-5
CONVERTER - 4.0L - INSTALLATION, CATALYTIC	11-5
CONVERTER - 4.0L - REMOVAL, CATALYTIC	11-5
CONVERTER - 4.7L - INSPECTION, CATALYTIC	11-7
CONVERTER - 4.7L - INSTALLATION, CATALYTIC	11-7
CONVERTER - 4.7L - REMOVAL, CATALYTIC	11-6
CONVERTER - DESCRIPTION, CATALYTIC	11-6
CONVERTER - DESCRIPTION, TORQUE	21-193,21-327
CONVERTER - INSTALLATION, TORQUE	21-198,21-332
CONVERTER - OPERATION, TORQUE	21-197,21-331
CONVERTER - REMOVAL, TORQUE	21-197,21-332
CONVERTER 4.0L ENGINE - DESCRIPTION, CATALYTIC	11-4
CONVERTER DRAINBACK VALVE - DESCRIPTION, TORQUE	21-198
CONVERTER DRAINBACK VALVE - OPERATION, TORQUE	21-198
CONVERTER DRAINBACK VALVE - STANDARD PROCEDURES, TORQUE	21-198
CONVERTER HOUSING FLUID LEAK - DIAGNOSIS AND TESTING	21-246,21-78
COOLANT - DESCRIPTION	7-26
COOLANT - OPERATION	7-26
COOLANT INDICATOR - DESCRIPTION, LOW	8J-20
COOLANT INDICATOR - OPERATION, LOW	8J-21
COOLANT LEVEL SENSOR - INSTALLATION	7-27
COOLANT LEVEL SENSOR - REMOVAL	7-26
COOLANT RECOVERY PRESS CONTAINER - DESCRIPTION	7-27
COOLANT TEMP SENSOR - DESCRIPTION, ENGINE	7-35
COOLANT TEMP SENSOR - OPERATION, ENGINE	7-35
COOLANT THERMOSTAT - OPERATION, ENGINE	7-36
COOLER - DESCRIPTION, TRANS	7-56
COOLER - INSTALLATION, FLUID	19-40
COOLER - REMOVAL, FLUID	19-40
COOLER FLOW - DIAGNOSIS AND TESTING, TRANS OIL	7-55
COOLER FLUSH USING TOOL 6906-B - STANDARD PROCEDURE	7-56
COOLING FAN - DIAGNOSIS AND TESTING, ELECTRIC	7-47
COOLING FAN FLUID FILTER - DESCRIPTION, POWER STEERING/ RADIATOR	19-35
COOLING FAN FLUID FILTER - OPERATION, POWER STEERING/ RADIATOR	19-36
COOLING, SPECIAL TOOLS	7-16
COOLING SYSTEM - 4.0L ENGINE - STANDARD PROCEDURE, DRAINING	7-14
COOLING SYSTEM - 4.0L ENGINE - STANDARD PROCEDURE, REFILLING	7-15
COOLING SYSTEM - OPERATION	7-4
COOLING SYSTEM 4.0L ENGINE - DESCRIPTION	7-3
COOLING SYSTEM 4.7L ENGINE - DESCRIPTION	7-1
COOLING SYSTEM 4.7L ENGINE - STANDARD PROCEDURES, DRAINING	7-13
COOLING SYSTEM 4.7L ENGINE - STANDARD PROCEDURES, REFILLING	7-14
COOLING SYSTEM DEAERATION - DIAGNOSIS AND TESTING	7-13
COOLING SYSTEM DIAGNOSIS CHART - DIAGNOSIS AND TESTING	7-5
COOLING SYSTEM REQUIREMENTS - DESCRIPTION	24-1
COOLING SYSTEM (REVERSE FLUSHING) - STANDARD PROCEDURE	7-15
COOLING SYSTEM ROUTING 4.0L ENGINE - DESCRIPTION	7-3
COOLING SYSTEM ROUTING 4.7L ENGINE - DESCRIPTION	7-1
COOLING SYSTEM TESTING FOR LEAKS - DIAGNOSIS AND TESTING	7-12
CORE - DESCRIPTION, HEATER	24-68
CORE - INSTALLATION, HEATER	24-69
CORE - OPERATION, HEATER	24-68
CORE - REMOVAL, HEATER	24-68
CORE AND OIL GALLERY PLUGS - STANDARD PROCEDURE, ENGINE	9-11,9-72
COURTESY LAMP BRACKET - INSTALLATION, INSTRUMENT PANEL	23-149
COURTESY LAMP BRACKET - REMOVAL, INSTRUMENT PANEL	23-148
COVER - DESCRIPTION, STRUCTURAL	9-123
COVER - INSTALLATION, FRONT SEAT BACK	23-175
COVER - INSTALLATION, FUSE	8W-19
COVER - INSTALLATION, INSTRUMENT PANEL TOP	23-141
COVER - INSTALLATION, REAR SEAT BACK	23-179
COVER - INSTALLATION, REAR SEAT CUSHION	23-180
COVER - INSTALLATION, STEERING COLUMN OPENING	23-157
COVER - INSTALLATION, STRUCTURAL	9-123
COVER - OPERATION, STRUCTURAL	9-123
COVER - REMOVAL, FRONT SEAT BACK	23-175
COVER - REMOVAL, FUSE	8W-18
COVER - REMOVAL, INSTRUMENT PANEL TOP	23-141
COVER - REMOVAL, REAR SEAT BACK	23-179
COVER - REMOVAL, REAR SEAT CUSHION	23-180
COVER - REMOVAL, STEERING COLUMN OPENING	23-156
COVER - REMOVAL, STRUCTURAL	9-123
COVER BRACKET - INSTALLATION, INSTRUMENT PANEL C-CHANNEL	23-145
COVER BRACKET - REMOVAL, INSTRUMENT PANEL C-CHANNEL	23-145
COVER(S) - CLEANING, CYLINDER HEAD	9-23
COVER(S) - DESCRIPTION, CYLINDER HEAD	9-22
COVER(S) - INSPECTION, CYLINDER HEAD	9-23
COVER(S) - INSTALLATION, CYLINDER HEAD	9-23
COVER(S) - INSTALLATION, TIMING BELT / CHAIN	9-146,9-60
COVERS - INSTALLATION, WHEEL	30-7
COVER(S) - LEFT - CLEANING, CYLINDER HEAD	9-92
COVER(S) - LEFT - DESCRIPTION, CYLINDER HEAD	9-92
COVER(S) - REMOVAL, CYLINDER HEAD	9-22
COVER(S) - REMOVAL, TIMING BELT / CHAIN	9-146,9-59
COVER(S) - RIGHT - CLEANING, CYLINDER HEAD	9-103
COVER(S) - RIGHT - DESCRIPTION, CYLINDER HEAD	9-103
COWL GRILLE - INSTALLATION	23-114
COWL GRILLE - REMOVAL	23-114
COWL TRIM - INSTALLATION	23-161
COWL TRIM - REMOVAL	23-161
COWL WEATHERSTRIP - INSTALLATION	23-187
COWL WEATHERSTRIP - REMOVAL	23-187
C-PILLAR TRIM - INSTALLATION	23-162
C-PILLAR TRIM - REMOVAL	23-162
CRANKSHAFT - DESCRIPTION	9-110,9-36
CRANKSHAFT - INSPECTION	9-111
CRANKSHAFT - INSTALLATION	9-111
CRANKSHAFT - REMOVAL	9-111
CRANKSHAFT END PLAY - STANDARD PROCEDURE	9-110
CRANKSHAFT MAIN BEARING - FITTING - STANDARD PROCEDURE	9-114
CRANKSHAFT MAIN BEARINGS - INSPECTION	9-114,9-39
CRANKSHAFT MAIN BEARINGS - INSTALLATION	9-40
CRANKSHAFT MAIN BEARINGS - REMOVAL	9-39
CRANKSHAFT MAIN BEARINGS - STANDARD PROCEDURE, FITTING	9-36
CRANKSHAFT OIL SEAL - FRONT - INSTALLATION	9-115,9-41
CRANKSHAFT OIL SEAL - FRONT - REMOVAL	9-115,9-41
CRANKSHAFT OIL SEAL - REAR - INSTALLATION	9-116,9-42
CRANKSHAFT OIL SEAL - REAR - REMOVAL	9-116,9-42
CRUISE INDICATOR - DESCRIPTION	8J-17
CRUISE INDICATOR - OPERATION	8J-17
CUSHION - INSTALLATION, FRONT SEAT	23-175
CUSHION - INSTALLATION, REAR SEAT	23-179
CUSHION - REMOVAL, FRONT SEAT	23-175
CUSHION - REMOVAL, REAR SEAT	23-179
CUSHION COVER - INSTALLATION, REAR SEAT	23-180
CUSHION COVER - REMOVAL, REAR SEAT	23-180
C/V JOINT - INSTALLATION, AXLE	3-34
C/V JOINT - REMOVAL, AXLE	3-34
CYLINDER - DESCRIPTION, MASTER	5-21
CYLINDER - INSTALLATION, LOCK	23-104
CYLINDER - INSTALLATION, MASTER	5-23
CYLINDER - OPERATION, MASTER	5-21
CYLINDER - REMOVAL, LOCK	23-104
CYLINDER - REMOVAL, MASTER	5-23
CYLINDER BORE HONING - STANDARD PROCEDURE	9-107,9-11
CYLINDER COMBUSTION PRESSURE LEAKAGE - DIAGNOSIS AND TESTING	9-70,9-8
CYLINDER COMPRESSION PRESSURE - DIAGNOSIS AND TESTING	9-8
CYLINDER COMPRESSION PRESSURE TEST - DIAGNOSIS AND TESTING	9-69
CYLINDER HEAD - CLEANING	9-20
CYLINDER HEAD - DESCRIPTION	9-19,9-82,9-96
CYLINDER HEAD - INSPECTION	9-21
CYLINDER HEAD - INSTALLATION	9-21
CYLINDER HEAD - LEFT - CLEANING	9-85
CYLINDER HEAD - LEFT - INSPECTION	9-85
CYLINDER HEAD - LEFT - INSTALLATION	9-85
CYLINDER HEAD - LEFT - REMOVAL	9-83
CYLINDER HEAD - REMOVAL	9-20
CYLINDER HEAD - RIGHT - CLEANING	9-98
CYLINDER HEAD - RIGHT - INSPECTION	9-98
CYLINDER HEAD - RIGHT - INSTALLATION	9-98
CYLINDER HEAD - RIGHT - REMOVAL	9-97
CYLINDER HEAD COVER(S) - CLEANING	9-23
CYLINDER HEAD COVER(S) - DESCRIPTION	9-22
CYLINDER HEAD COVER(S) - INSPECTION	9-23

Description	Group-Page
CYLINDER HEAD COVER(S) - INSTALLATION	9-23
CYLINDER HEAD COVER(S) - LEFT - CLEANING	9-92
CYLINDER HEAD COVER(S) - LEFT - DESCRIPTION	9-92
CYLINDER HEAD COVER(S) - REMOVAL	9-22
CYLINDER HEAD COVER(S) - RIGHT - CLEANING	9-103
CYLINDER HEAD COVER(S) - RIGHT - DESCRIPTION	9-103
CYLINDER HEAD GASKET - DIAGNOSIS AND TESTING	9-83,9-96
CYLINDER HOUSING - KEY CYLINDER INSTALLATION, LOCK	19-14
CYLINDER HOUSING - KEY CYLINDER REMOVAL, LOCK	19-13
CYLINDER INSTALLATION, LOCK CYLINDER HOUSING - KEY	19-14
CYLINDER LOCK / UNLOCK SWITCH - DESCRIPTION, DOOR	8N-7
CYLINDER LOCK / UNLOCK SWITCH - OPERATION, DOOR	8N-7
CYLINDER REMOVAL, LOCK CYLINDER HOUSING - KEY	19-13
CYLINDER/POWER BOOSTER - DIAGNOSIS AND TESTING, MASTER	5-21
CYLINDERS - DESCRIPTION, LOCK	23-1
DAMAGED OR WORN THREADS - STANDARD PROCEDURE, REPAIR	9-10,9-70
DAMPER - DESCRIPTION	19-32
DAMPER - INSTALLATION	19-32
DAMPER - INSTALLATION, VIBRATION	9-122, 9-50
DAMPER - OPERATION	19-32
DAMPER - REMOVAL	19-32
DAMPER - REMOVAL, VIBRATION	9-121,9-49
DATA LINK CONNECTOR - DESCRIPTION	8E-10
DATA LINK CONNECTOR - OPERATION	8E-10
DAY / NIGHT MIRROR - DIAGNOSIS AND TESTING, AUTOMATIC	8N-12
DAY / NIGHT MIRROR - INSTALLATION, AUTOMATIC	8N-13
DAY / NIGHT MIRROR - REMOVAL, AUTOMATIC	8N-13
DAYTIME RUNNING LAMP MODULE - DESCRIPTION	8L-10
DAYTIME RUNNING LAMP MODULE - INSTALLATION	8L-10
DAYTIME RUNNING LAMP MODULE - OPERATION	8L-10
DAYTIME RUNNING LAMP MODULE - REMOVAL	8L-10
DEAERATION - DIAGNOSIS AND TESTING, COOLING SYSTEM	7-13
DEFINITION - DESCRIPTION, TRIP	25-18
DEFOGGER - DESCRIPTION, REAR WINDOW	8G-13
DEFOGGER - DIAGNOSIS AND TESTING, WINDOW	8G-14
DEFOGGER - OPERATION, REAR WINDOW	8G-13
DEFOGGER GRID - DESCRIPTION, REAR WINDOW	8G-15
DEFOGGER GRID - DIAGNOSIS AND TESTING, REAR WINDOW	8G-15
DEFOGGER GRID - OPERATION, REAR WINDOW	8G-15
DEFOGGER RELAY - DESCRIPTION, REAR WINDOW	8G-16
DEFOGGER RELAY - DIAGNOSIS AND TESTING, REAR WINDOW	8G-17
DEFOGGER RELAY - INSTALLATION, REAR WINDOW	8G-18
DEFOGGER RELAY - OPERATION, REAR WINDOW	8G-17
DEFOGGER RELAY - REMOVAL, REAR WINDOW	8G-18
DEFOGGER SWITCH - DESCRIPTION, REAR WINDOW	8G-18
DEFOGGER SWITCH - DIAGNOSIS AND TESTING, REAR WINDOW	8G-19
DEFOGGER SWITCH - OPERATION, REAR WINDOW	8G-19
DEFOGGER SWITCH - REMOVAL, REAR WINDOW	8G-19
DEFROSTER DUCTS - INSTALLATION	24-39
DEFROSTER DUCTS - REMOVAL	24-38
DELIVERY - DESCRIPTION, FUEL	14-1
DELIVERY - OPERATION, FUEL	14-2
DELIVERY - TORQUE, FUEL	14-4
DELIVERY STORAGE - DESCRIPTION, PRE	30-14
DELIVERY STORAGE - STANDARD PROCEDURE, PRE	30-15
DEMAGNETIZING - STANDARD PROCEDURE, COMPASS	8M-3
DEPLOYMENT - STANDARD PROCEDURE, SERVICE AFTER AN AIRBAG	8O-4
DESCRIPTION, 4.0L	14-14,14-36
DESCRIPTION, 4.0L	8I-4
DESCRIPTION, 4.0L	19-35
DESCRIPTION, 4.0L ENGINE	7-32,7-36
DESCRIPTION, 4.7L	14-14,14-36
DESCRIPTION, 4.7L	8I-4
DESCRIPTION, 4.7L	19-35
DESCRIPTION, 4.7L ENGINE	7-32,7-36
DESCRIPTION, 4.7L ENGINE	9-64
DESCRIPTION, 5 VOLT SUPPLIES	8E-18
DESCRIPTION, ABS INDICATOR	8J-12
DESCRIPTION, A/C COMPRESSOR	24-56
DESCRIPTION, A/C COMPRESSOR CLUTCH	24-13
DESCRIPTION, A/C COMPRESSOR CLUTCH RELAY	24-16
DESCRIPTION, A/C CONDENSER	24-59
DESCRIPTION, A/C EVAPORATOR	24-63
DESCRIPTION, A/C HEATER CONTROL	24-17
DESCRIPTION, A/C HIGH PRESSURE SWITCH	24-25
DESCRIPTION, A/C LOW PRESSURE SWITCH	24-26
DESCRIPTION, A/C ORIFICE TUBE	24-67
DESCRIPTION, ACCUMULATOR	24-65
DESCRIPTION, ACCUMULATOR	21-124
DESCRIPTION, AIRBAG CONTROL MODULE	8O-6
DESCRIPTION, AIRBAG INDICATOR	8J-13
DESCRIPTION, AMBIENT TEMPERATURE SENSOR	8M-10
DESCRIPTION, AMPLIFIER	8A-5
DESCRIPTION, ANTENNA BODY & CABLE	8A-6
DESCRIPTION, AUDIO	8A-1
DESCRIPTION, AUTO SHUT DOWN RELAY	8I-3
DESCRIPTION, AUTOMATIC TRANSMISSION - 42RE	21-66
DESCRIPTION, AUTOMATIC TRANSMISSION - 545RFE	21-242
DESCRIPTION, AUTOMATIC TRANSMISSION FLUID	0-4
DESCRIPTION, BANDS	21-125
DESCRIPTION, BASE COAT/CLEAR COAT FINISH	23-170
DESCRIPTION, BATTERY	8F-7
DESCRIPTION, BATTERY CABLE	8F-20
DESCRIPTION, BATTERY HOLDDOWN	8F-19
DESCRIPTION, BATTERY SYSTEM	8F-1
DESCRIPTION, BATTERY TEMPERATURE SENSOR	8F-30
DESCRIPTION, BATTERY TRAY	8F-25
DESCRIPTION, BLEND DOOR ACTUATOR	24-30
DESCRIPTION, BLOWER MOTOR	24-37
DESCRIPTION, BLOWER MOTOR CONTROLLER	24-27
DESCRIPTION, BLOWER MOTOR RESISTOR BLOCK	24-28
DESCRIPTION, BLOWER MOTOR SWITCH	24-29
DESCRIPTION, BODY	23-1
DESCRIPTION, BODY CODE PLATE	Intro.-1
DESCRIPTION, BODY CONTROL/ CENTRAL TIMER MODULE	8E-2
DESCRIPTION, BRAKE LAMP SWITCH	8L-5
DESCRIPTION, BRAKE LINES	5-7
DESCRIPTION, BRAKE TRANSMISSION SHIFT INTERLOCK MECHANISM	21-127,21-289
DESCRIPTION, BRAKE/PARK BRAKE INDICATOR	8J-14
DESCRIPTION, BRAKES - ABS	5-36
DESCRIPTION, BRAKES - BASE	5-2
DESCRIPTION, BUMPERS	13-1
DESCRIPTION, CABLE	8P-3
DESCRIPTION, CAMSHAFT & BEARINGS	9-30
DESCRIPTION, CAMSHAFT(S) - LEFT	9-87
DESCRIPTION, CAMSHAFT(S) - RIGHT	9-99
DESCRIPTION, CATALYTIC CONVERTER	11-6
DESCRIPTION, CATALYTIC CONVERTER 4.0L ENGINE	11-4
DESCRIPTION, CCV SYSTEM	25-24
DESCRIPTION, CD CHANGER	8A-10
DESCRIPTION, CHARGING	8F-28
DESCRIPTION, CHECK GAUGES INDICATOR	8J-16
DESCRIPTION, CHIME WARNING SYSTEM	8B-1
DESCRIPTION, CIGAR LIGHTER OUTLET	8W-2
DESCRIPTION, CLOCKSPRING	8O-9
DESCRIPTION, COIL RAIL	8I-8
DESCRIPTION, COMBINATION FLASHER	8L-7
DESCRIPTION, COMMUNICATION	8E-7
DESCRIPTION, COMPONENT FASTENERS	23-1
DESCRIPTION, CONNECTOR/GROUND LOCATIONS	8W-1
DESCRIPTION, CONTROLLER ANTILOCK BRAKE	8E-9
DESCRIPTION, COOLANT	7-26
DESCRIPTION, COOLANT RECOVERY PRESS CONTAINER	7-27
DESCRIPTION, COOLING SYSTEM 4.0L ENGINE	7-3
DESCRIPTION, COOLING SYSTEM 4.7L ENGINE	7-1
DESCRIPTION, COOLING SYSTEM REQUIREMENTS	24-1
DESCRIPTION, COOLING SYSTEM ROUTING 4.0L ENGINE	7-3
DESCRIPTION, COOLING SYSTEM ROUTING 4.7L ENGINE	7-1
DESCRIPTION, CRANKSHAFT	9-110,9-36
DESCRIPTION, CRUISE INDICATOR	8J-17
DESCRIPTION, CYLINDER HEAD	9-19,9-82,9-96
DESCRIPTION, CYLINDER HEAD COVER(S)	9-22
DESCRIPTION, CYLINDER HEAD COVER(S) - LEFT	9-92
DESCRIPTION, CYLINDER HEAD COVER(S) - RIGHT	9-103
DESCRIPTION, DAMPER	19-32
DESCRIPTION, DATA LINK CONNECTOR	8E-10
DESCRIPTION, DAYTIME RUNNING LAMP MODULE	8L-10
DESCRIPTION, DIAGNOSTIC TROUBLE CODES	25-2
DESCRIPTION, DOOR AJAR SWITCH	8L-32
DESCRIPTION, DOOR CYLINDER LOCK / UNLOCK SWITCH	8N-7
DESCRIPTION, DOOR MODULE	8E-10
DESCRIPTION, DRAG LINK	19-33
DESCRIPTION, DRIVER AIRBAG	8O-13
DESCRIPTION, DRIVER DOOR AJAR SWITCH	8L-33
DESCRIPTION, DRIVER HEATED SEAT SWITCH	8G-5
DESCRIPTION, DRIVER SEAT SWITCH	8N-19
DESCRIPTION, ELECTRIC BRAKE	5-38
DESCRIPTION, ELECTRONIC GOVERNOR	21-130
DESCRIPTION, ELECTRONIC VEHICLE INFO CENTER	8M-6
DESCRIPTION, EMERGENCY TOW HOOKS	0-14
DESCRIPTION, EMISSION CONTROL SYSTEM	25-1
DESCRIPTION, ENGINE - 4.0L	9-2
DESCRIPTION, ENGINE BLOCK	9-107
DESCRIPTION, ENGINE COOLANT TEMP SENSOR	7-35
DESCRIPTION, ENGINE OIL	0-3
DESCRIPTION, ENGINE OIL PRESSURE SENSOR	9-56
DESCRIPTION, ENGINE TEMPERATURE GAUGE	8J-17
DESCRIPTION, EVAPORATION CONTROL SYSTEM	25-23
DESCRIPTION, EVAP/PURGE SOLENOID	25-27
DESCRIPTION, EXHAUST MANIFOLD	9-59
DESCRIPTION, EXHAUST MANIFOLD - LEFT	9-137
DESCRIPTION, EXHAUST MANIFOLD - RIGHT	9-138
DESCRIPTION, EXHAUST SYSTEM 4.0L ENGINE	11-1

Description	Group-Page
DESCRIPTION, FAN DRIVE VISCOUS CLUTCH - 4.0L	7-39
DESCRIPTION, FASTENER IDENTIFICATION	Intro.-1
DESCRIPTION, FASTENER USAGE	Intro.-4
DESCRIPTION, FLIP UP GLASS AJAR SWITCH	8L-32
DESCRIPTION, FLUID TYPES	0-2,0-3
DESCRIPTION, FRAME	13-4
DESCRIPTION, FRONT AXLE - 186FBI	3-16
DESCRIPTION, FRONT CHECK VALVE	8R-8
DESCRIPTION, FRONT CLUTCH	21-139
DESCRIPTION, FRONT DISC BRAKE SHOES	5-8
DESCRIPTION, FRONT FOG LAMPS INDICATOR	8J-18
DESCRIPTION, FRONT POWER OUTLET	8W-12
DESCRIPTION, FRONT SERVO	21-143
DESCRIPTION, FRONT SUSPENSION	2-5
DESCRIPTION, FRONT WASHER HOSES/TUBES	8R-9
DESCRIPTION, FRONT WASHER NOZZLE	8R-10
DESCRIPTION, FRONT WASHER PUMP/MOTOR	8R-11
DESCRIPTION, FRONT WHEEL SPEED SENSOR	5-38
DESCRIPTION, FRONT WIPER ARM	8R-12
DESCRIPTION, FRONT WIPER BLADE	8R-14
DESCRIPTION, FRONT WIPER MODULE	8R-15
DESCRIPTION, FRONT WIPERS/ WASHERS	8R-2
DESCRIPTION, FUEL DELIVERY	14-1
DESCRIPTION, FUEL FILLER CAP	25-28
DESCRIPTION, FUEL FILTER/PRESSURE REGULATOR	14-5
DESCRIPTION, FUEL GAUGE	8J-19
DESCRIPTION, FUEL INJECTOR	14-38
DESCRIPTION, FUEL LEVEL SENDING UNIT / SENSOR	14-7
DESCRIPTION, FUEL LINES	14-8
DESCRIPTION, FUEL PUMP	14-9
DESCRIPTION, FUEL PUMP MODULE	14-13
DESCRIPTION, FUEL PUMP RELAY	14-39
DESCRIPTION, FUEL TANK	14-18
DESCRIPTION, FUEL TANK SKID PLATE	13-7
DESCRIPTION, GEAR	19-15
DESCRIPTION, GENERATOR	8F-30
DESCRIPTION, G-SWITCH	5-39
DESCRIPTION, HCU (HYDRAULIC CONTROL UNIT)	5-41
DESCRIPTION, HEADLAMP	8L-12
DESCRIPTION, HEADLAMP SWITCH	8L-16
DESCRIPTION, HEAT SHIELDS	11-11
DESCRIPTION, HEATED MIRRORS	8G-1
DESCRIPTION, HEATED SEAT ELEMENT	8G-7
DESCRIPTION, HEATED SEAT SYSTEM	8G-3
DESCRIPTION, HEATER AND AIR CONDITIONER	24-1
DESCRIPTION, HEATER CORE	24-68
DESCRIPTION, HIGH BEAM INDICATOR	8J-20
DESCRIPTION, HIGH PRESSURE RELIEF VALVE	24-57
DESCRIPTION, HOLDING CLUTCHES	21-298
DESCRIPTION, HOOD AJAR SWITCH	8Q-8
DESCRIPTION, HORN	8H-3
DESCRIPTION, HORN RELAY	8H-4
DESCRIPTION, HORN SWITCH	8H-6
DESCRIPTION, HORN SYSTEM	8H-1
DESCRIPTION, HOSE CLAMPS	7-3
DESCRIPTION, HOW TO USE WIRING DIAGRAMS	8W-1
DESCRIPTION, HUB / BEARING	2-8
DESCRIPTION, HYDRAULIC LIFTERS	9-43
DESCRIPTION, IDLE AIR CONTROL MOTOR	14-40
DESCRIPTION, IGNITION CIRCUIT SENSE	8E-18
DESCRIPTION, IGNITION COIL	8I-10
DESCRIPTION, IGNITION COIL CAPACITOR	8I-12
DESCRIPTION, IGNITION CONTROL	8I-1
DESCRIPTION, IGNITION SWITCH	19-11
DESCRIPTION, IGNITION-OFF DRAW FUSE	8W-3
DESCRIPTION, IGNITION-OFF DRAW WIRE HARNESS CONNECTOR	8W-17
DESCRIPTION, IN-CAR TEMPERATURE SENSOR	24-30
DESCRIPTION, INPUT CLUTCH ASSEMBLY	21-300
DESCRIPTION, INPUT SPEED SENSOR	21-309
DESCRIPTION, INSTRUMENT CLUSTER	8J-2
DESCRIPTION, INSTRUMENT PANEL SYSTEM	23-124
DESCRIPTION, INTAKE AIR TEMPERATURE SENSOR	14-41
DESCRIPTION, INTAKE MANIFOLD	9-135,9-57
DESCRIPTION, INTAKE/EXHAUST VALVES & SEATS	9-103,9-23,9-93
DESCRIPTION, INTERNATIONAL SYMBOLS	Intro.-4
DESCRIPTION, INTERNATIONAL SYMBOLS	0-1
DESCRIPTION, JOUNCE BUMPER	2-17,2-9
DESCRIPTION, JUNCTION BLOCK	8W-4
DESCRIPTION, KEY-IN IGNITION SWITCH	19-12
DESCRIPTION, KNUCKLE	2-9
DESCRIPTION, LEAK DETECTION PUMP	25-28
DESCRIPTION, LEFT MULTI-FUNCTION SWITCH	8L-21
DESCRIPTION, LIFTGATE AJAR SWITCH	8L-32
DESCRIPTION, LIFTGATE FLIP-UP GLASS POWER RELEASE SYSTEM	8N-4
DESCRIPTION, LINE PRESSURE (LP) SENSOR	21-310
DESCRIPTION, LINKAGE	19-31
DESCRIPTION, LOCK CYLINDERS	23-1
DESCRIPTION, LOW COOLANT INDICATOR	8J-20
DESCRIPTION, LOW FUEL INDICATOR	8J-21
DESCRIPTION, LOWER CONTROL ARM	2-10, 2-17
DESCRIPTION, LUBRICATION	9-126,9-50
DESCRIPTION, LUMBAR CONTROL SWITCH	8N-23
DESCRIPTION, LUMBAR MOTOR	8N-24
DESCRIPTION, MAINTENANCE SCHEDULES	0-6
DESCRIPTION, MALFUNCTION INDICATOR LAMP (MIL)	8J-22
DESCRIPTION, MAP SENSOR	14-42
DESCRIPTION, MASTER CYLINDER	5-21
DESCRIPTION, MEMORY HEATED SEAT/MIRROR MODULE	8E-14
DESCRIPTION, MEMORY SET SWITCH	8N-25
DESCRIPTION, MEMORY SYSTEM	8N-18
DESCRIPTION, METRIC SYSTEM	Intro.-5
DESCRIPTION, MODE DOOR ACTUATOR	24-31
DESCRIPTION, MUFFLER	11-12
DESCRIPTION, NON-MONITORED CIRCUITS	25-19
DESCRIPTION, O2S HEATER RELAY	14-44
DESCRIPTION, O2S SENSOR	14-44
DESCRIPTION, ODOMETER	8J-23
DESCRIPTION, OIL PAN	9-131,9-54
DESCRIPTION, OIL PRESSURE GAUGE	8J-24
DESCRIPTION, OIL PRESSURE SENSOR/SWITCH	9-132
DESCRIPTION, OIL PUMP	21-147,21-313
DESCRIPTION, OUTPUT SPEED SENSOR	21-319
DESCRIPTION, OUTSIDE REAR VIEW MIRROR	8N-11
DESCRIPTION, OVERDRIVE CLUTCH	21-152
DESCRIPTION, OVERDRIVE OFF INDICATOR	8J-24
DESCRIPTION, OVERDRIVE OFF SWITCH	21-153
DESCRIPTION, OVERDRIVE SWITCH	21-319
DESCRIPTION, OVERHEAD CONSOLE	8M-1
DESCRIPTION, OVERRUNNING CLUTCH CAM/OVERDRIVE PISTON RETAINER	21-172
DESCRIPTION, PAINT CODE	23-170
DESCRIPTION, PAINT TOUCH-UP	23-170
DESCRIPTION, PASSENGER AIRBAG	8O-20
DESCRIPTION, PASSENGER HEATED SEAT SWITCH	8G-10
DESCRIPTION, PASSENGER SEAT SWITCH	8N-26
DESCRIPTION, PCM	8E-15
DESCRIPTION, PCV SYSTEM	25-24
DESCRIPTION, PEDAL	5-23
DESCRIPTION, PISTON & CONNECTING ROD	9-117,9-44
DESCRIPTION, PISTONS	21-175,21-319
DESCRIPTION, PITMAN ARM	19-33
DESCRIPTION, PLANETARY GEARTRAIN	21-322
DESCRIPTION, PLANETARY GEARTRAIN/ OUTPUT SHAFT	21-177
DESCRIPTION, POWER BRAKE BOOSTER	5-24
DESCRIPTION, POWER DISTRIBUTION	8W-1
DESCRIPTION, POWER DISTRIBUTION CENTER	8W-7
DESCRIPTION, POWER GROUNDS	8E-18
DESCRIPTION, POWER LOCK MOTOR	8N-7
DESCRIPTION, POWER LOCK SWITCH	8N-9
DESCRIPTION, POWER LOCK SYSTEM	8N-1
DESCRIPTION, POWER MIRROR SWITCH	8N-13
DESCRIPTION, POWER MIRRORS	8N-10
DESCRIPTION, POWER OUTLET RELAY	8W-16
DESCRIPTION, POWER SEAT TRACK	8N-30
DESCRIPTION, POWER SEATS	8N-17
DESCRIPTION, POWER STEERING SYSTEM	19-1
DESCRIPTION, POWER STEERING/ RADIATOR COOLING FAN FLUID FILTER	19-35
DESCRIPTION, POWER WINDOW SWITCH	8N-35
DESCRIPTION, POWER WINDOWS	8N-32
DESCRIPTION, PRE DELIVERY STORAGE	30-14
DESCRIPTION, PRESSURE LINE	19-40
DESCRIPTION, PROGRAMMABLE ELECTRONIC FEATURES	30-15
DESCRIPTION, PROPELLER SHAFT	3-1
DESCRIPTION, PWM FAN CONTROL MODULE - 4.0L	7-40
DESCRIPTION, QUICK CONNECT FITTING	14-22
DESCRIPTION, RADIAL-PLY TIRES	22-6
DESCRIPTION, RADIATOR - 4.0L	7-44
DESCRIPTION, RADIATOR - 4.7L	7-42
DESCRIPTION, RADIATOR FAN - 4.0L	7-31
DESCRIPTION, RADIATOR FAN - 4.7L	7-27
DESCRIPTION, RADIATOR PRESSURE CAP	7-52
DESCRIPTION, RADIO	8A-14
DESCRIPTION, RADIO NOISE SUPPRESSION GROUND STRAP	8A-16
DESCRIPTION, READING LAMP	8L-35
DESCRIPTION, REAR AXLE - 198RBI	3-49
DESCRIPTION, REAR AXLE - 226RBA	3-87
DESCRIPTION, REAR CLUTCH	21-183
DESCRIPTION, REAR DISC BRAKE SHOES	5-8
DESCRIPTION, REAR FOG LAMPS INDICATOR	8J-25
DESCRIPTION, REAR POWER OUTLET	8W-13
DESCRIPTION, REAR SERVO	21-187
DESCRIPTION, REAR SUSPENSION	2-16
DESCRIPTION, REAR VIEW MIRROR	8N-11
DESCRIPTION, REAR WASHER HOSES/TUBES	8R-36
DESCRIPTION, REAR WASHER NOZZLE	8R-37
DESCRIPTION, REAR WASHER PUMP/MOTOR	8R-38
DESCRIPTION, REAR WHEEL SPEED SENSOR	5-40
DESCRIPTION, REAR WINDOW DEFOGGER	8G-13
DESCRIPTION, REAR WINDOW DEFOGGER GRID	8G-15
DESCRIPTION, REAR WINDOW DEFOGGER RELAY	8G-16
DESCRIPTION, REAR WINDOW DEFOGGER SWITCH	8G-18
DESCRIPTION, REAR WIPER ARM	8R-39
DESCRIPTION, REAR WIPER BLADE	8R-40
DESCRIPTION, REAR WIPER MODULE	8R-42
DESCRIPTION, REAR WIPERS/WASHERS	8R-31
DESCRIPTION, RECIRCULATION DOOR ACTUATOR	24-33
DESCRIPTION, RECLINER MOTOR	8N-29
DESCRIPTION, RED BRAKE WARN INDICATOR SWITCH	5-7
DESCRIPTION, REFRIGERANT	24-70
DESCRIPTION, REFRIGERANT LINE	24-51
DESCRIPTION, REFRIGERANT OIL	24-70
DESCRIPTION, REFRIGERANT SYSTEM SERVICE PORT	24-1
DESCRIPTION, REMOTE KEYLESS ENTRY MODULE	8N-9
DESCRIPTION, REMOTE KEYLESS ENTRY SYSTEM	8N-2
DESCRIPTION, REMOTE KEYLESS ENTRY TRANSMITTER	8N-8

Description	Group-Page
DESCRIPTION, REMOTE SWITCHES	8A-17
DESCRIPTION, REPLACEMENT TIRES	22-7
DESCRIPTION, RESTRAINTS	8O-1
DESCRIPTION, RETURN LINE	19-40
DESCRIPTION, RIGHT MULTI-FUNCTION SWITCH	8R-17
DESCRIPTION, ROAD TEST INSPECTION	30-11
DESCRIPTION, ROCKER ARM / ADJUSTER ASSEMBLY	9-106,9-26,9-94
DESCRIPTION, ROLLOVER VALVE	14-25
DESCRIPTION, SEAT BELT SWITCH	8O-25
DESCRIPTION, SEATBELT INDICATOR	8J-26
DESCRIPTION, SEATS	23-172
DESCRIPTION, SENSOR RETURN	8E-18
DESCRIPTION, SENTRY KEY IMMOBILIZER MODULE	8E-21
DESCRIPTION, SENTRY KEY IMMOBILIZER SYSTEM	8Q-2
DESCRIPTION, SERVO	8P-4
DESCRIPTION, SHIFT INDICATOR (TRANSFER CASE)	8J-27
DESCRIPTION, SHIFT MECHANISM	21-188, 21-324
DESCRIPTION, SHOCK	2-11,2-18
DESCRIPTION, SIDEVIEW MIRROR	8N-14
DESCRIPTION, SKIS INDICATOR LAMP	8Q-11
DESCRIPTION, SOLENOID	21-190
DESCRIPTION, SOLENOID SWITCH VALVE	21-326
DESCRIPTION, SOLENOIDS	21-327
DESCRIPTION, SPARE / TEMPORARY TIRE	22-8
DESCRIPTION, SPARK PLUG	8I-13
DESCRIPTION, SPEED CONTROL	8P-1
DESCRIPTION, SPEED SENSOR	21-191
DESCRIPTION, SPEEDOMETER	8J-28
DESCRIPTION, SPLICE LOCATIONS	8W-1
DESCRIPTION, SPRING	2-12,2-19
DESCRIPTION, STABILIZER BAR	2-13,2-20
DESCRIPTION, STARTER MOTOR	8F-39
DESCRIPTION, STARTER MOTOR RELAY	8F-42
DESCRIPTION, STARTING	8F-33
DESCRIPTION, STATE DISPLAY TEST MODE	25-1
DESCRIPTION, STATIONARY GLASS	23-182
DESCRIPTION, STRUCTURAL COVER	9-123
DESCRIPTION, SWITCH	8P-6
DESCRIPTION, TACHOMETER	8J-29
DESCRIPTION, TAIL LAMP	8L-28
DESCRIPTION, TAILPIPE	11-13
DESCRIPTION, TASK MANAGER	25-16
DESCRIPTION, THE IMPORTANCE OF CAREFUL NEW VEHICLE PREPARATION	30-1
DESCRIPTION, THERMAL GUARD	8F-26
DESCRIPTION, THREADED HOLE REPAIR	Intro.-4
DESCRIPTION, THROTTLE BODY	14-48
DESCRIPTION, THROTTLE POSITION SENSOR	14-51
DESCRIPTION, THROTTLE VALVE CABLE	21-191
DESCRIPTION, TIE ROD END	19-34
DESCRIPTION, TIMING DRIVE SYSTEM	9-140
DESCRIPTION, TIRE INFLATION PRESSURES	22-6
DESCRIPTION, TIRE PRESSURE FOR HIGH SPEED	22-6
DESCRIPTION, TIRES	22-5
DESCRIPTION, TORQUE CONVERTER	21-193, 21-327
DESCRIPTION, TORQUE CONVERTER DRAINBACK VALVE	21-198
DESCRIPTION, TORQUE REFERENCES	Intro.-7
DESCRIPTION, TRACK BAR	2-13
DESCRIPTION, TRANS COOLER	7-56
DESCRIPTION, TRANS OVERTEMP INDICATOR	8J-29
DESCRIPTION, TRANSFER CASE	0-6
DESCRIPTION, TRANSFER CASE - NV242	0-4
DESCRIPTION, TRANSFER CASE - NV242	21-1
DESCRIPTION, TRANSFER CASE - NV247	0-4
DESCRIPTION, TRANSFER CASE - NV247	21-38
DESCRIPTION, TRANSMISSION CONTROL MODULE	8E-23
DESCRIPTION, TRANSMISSION CONTROL RELAY	21-333
DESCRIPTION, TRANSMISSION RANGE SENSOR	21-333
DESCRIPTION, TRANSMISSION SOLENOID/TRS ASSEMBLY	21-334
DESCRIPTION, TRANSMISSION TEMPERATURE SENSOR	21-199,21-335
DESCRIPTION, TRANSPONDER KEY	8Q-11
DESCRIPTION, TRIP DEFINITION	25-18
DESCRIPTION, TURN SIGNAL & HAZARD WARNING SYSTEM	8L-2
DESCRIPTION, TURN SIGNAL CANCEL CAM	8L-29
DESCRIPTION, TURN SIGNAL INDICATORS	8J-30
DESCRIPTION, UNIVERSAL TRANSMITTER	8M-10
DESCRIPTION, UPPER CONTROL ARM	2-15,2-21
DESCRIPTION, UPPER SUSPENSION ARM, BUSHINGS, AND BALL JOINT	2-20
DESCRIPTION, VACUUM CHECK VALVE	24-34
DESCRIPTION, VACUUM RESERVOIR	24-35
DESCRIPTION, VACUUM RESERVOIR	8P-7
DESCRIPTION, VALVE BODY	21-199,21-335
DESCRIPTION, VALVE GUIDES	9-82,9-96
DESCRIPTION, VALVE SPRINGS	9-107,9-28,9-96
DESCRIPTION, VALVE STEM SEALS	9-107,9-28, 9-96
DESCRIPTION, VAPOR CANISTER	25-32
DESCRIPTION, VECI LABEL	Intro.-9
DESCRIPTION, VEHICLE IDENTIFICATION NUMBER	Intro.-9
DESCRIPTION, VEHICLE SAFETY CERTIFICATION LABEL	Intro.-10
DESCRIPTION, VEHICLE THEFT SECURITY SYSTEM	8Q-1
DESCRIPTION, VOLTAGE GAUGE	8J-31
DESCRIPTION, VOLTAGE REGULATOR	8F-32
DESCRIPTION, VTSS INDICATOR	8Q-12
DESCRIPTION, WAIT-TO-START INDICATOR	8J-32
DESCRIPTION, WASHER FLUID LEVEL SWITCH	8R-21
DESCRIPTION, WASHER RESERVOIR	8R-22
DESCRIPTION, WATER PUMP	7-47
DESCRIPTION, WATER PUMP - 4.0L	7-49
DESCRIPTION, WATER PUMP BYPASS	7-47
DESCRIPTION, WATER-IN-FUEL INDICATOR	8J-33
DESCRIPTION, WET SANDING/BUFFING & POLISHING	23-171
DESCRIPTION, WHEEL ALIGNMENT	2-3
DESCRIPTION, WHEELS	22-8
DESCRIPTION, WINDOW MOTOR	8N-37
DESCRIPTION, WINDSHIELD	23-183
DESCRIPTION, WIPER HIGH/LOW RELAY	8R-24
DESCRIPTION, WIPER ON/OFF RELAY	8R-27
DETECTION PUMP - DESCRIPTION, LEAK	25-28
DETECTION PUMP - INSTALLATION, LEAK	25-30
DETECTION PUMP - REMOVAL, LEAK	25-30
DIAGNOSIS - DIAGNOSIS AND TESTING, HYDRAULIC LASH ADJUSTER NOISE	9-83,9-97
DIAGNOSIS - DIAGNOSIS AND TESTING, INTAKE MANIFOLD LEAKAGE	9-57
DIAGNOSIS - DIAGNOSIS AND TESTING, PRELIMINARY	21-244
DIAGNOSIS - INTRODUCTION - DIAGNOSIS AND TESTING, ENGINE	9-3,9-64
DIAGNOSIS - LUBRICATION - DIAGNOSIS AND TESTING, SERVICE	9-68
DIAGNOSIS - MECHANICAL - DIAGNOSIS AND TESTING, SERVICE	9-67
DIAGNOSIS - PERFORMANCE - DIAGNOSIS AND TESTING, SERVICE	9-65
DIAGNOSIS & TESTING, CIGAR LIGHTER OUTLET	8W-2
DIAGNOSIS & TESTING, FRONT POWER OUTLET	8W-13
DIAGNOSIS & TESTING, HEATED SEAT ELEMENT	8G-7
DIAGNOSIS & TESTING, HEATED SEAT MODULE	8E-14
DIAGNOSIS & TESTING, HEATED SEAT SENSOR	8G-9
DIAGNOSIS & TESTING, HEATED SEAT SWITCH	8G-10,8G-5
DIAGNOSIS & TESTING, HEATED SEAT SYSTEM	8G-4
DIAGNOSIS & TESTING, MEMORY SWITCH	8N-25
DIAGNOSIS & TESTING, MEMORY SYSTEM	8N-19
DIAGNOSIS & TESTING, POWER LUMBAR ADJUSTER	8N-25
DIAGNOSIS & TESTING, POWER LUMBAR SWITCH	8N-23
DIAGNOSIS & TESTING, POWER OUTLET RELAY	8W-16
DIAGNOSIS & TESTING, POWER SEAT RECLINER	8N-29
DIAGNOSIS & TESTING, POWER SEAT SYSTEM	8N-19
DIAGNOSIS & TESTING, POWER SEAT TRACK	8N-31
DIAGNOSIS & TESTING, REAR POWER OUTLET	8W-13
DIAGNOSIS & TESTING, SEAT SWITCH	8N-20, 8N-27
DIAGNOSIS & TESTING, UNIVERSAL GARAGE DOOR OPENER	8M-10
DIAGNOSIS & TESTING–ELECTRONIC VEHICLE INFORMATION CENTER, ELECTRONIC VEHICLE INFO CENTER	8M-8
DIAGNOSIS AND TESTING, A/C COMPRESSOR CLUTCH RELAY	24-16
DIAGNOSIS AND TESTING, A/C HIGH PRESSURE SWITCH	24-25
DIAGNOSIS AND TESTING, A/C LOW PRESSURE SWITCH	24-26
DIAGNOSIS AND TESTING, A/C PERFORMANCE	24-2
DIAGNOSIS AND TESTING, AIR CHECKING TRANSMISSION CLUTCH AND BAND OPERATION	21-77
DIAGNOSIS AND TESTING, AIR CHECKING TRANSMISSION CLUTCH OPERATION	21-246
DIAGNOSIS AND TESTING, AIRBAG SYSTEM	8O-3
DIAGNOSIS AND TESTING, AMBIENT TEMPERATURE SENSOR	8M-11
DIAGNOSIS AND TESTING, AMBIENT TEMPERATURE SENSOR CIRCUIT	8M-11
DIAGNOSIS AND TESTING, AMPLIFIER	8A-5
DIAGNOSIS AND TESTING, ANTENNA	8A-7
DIAGNOSIS AND TESTING, ANTILOCK BRAKES	5-37
DIAGNOSIS AND TESTING, AUDIO SYSTEM	8A-3
DIAGNOSIS AND TESTING, AUTO HEADLAMP SENSOR (AHL)	8L-5
DIAGNOSIS AND TESTING, AUTOMATIC DAY / NIGHT MIRROR	8N-12
DIAGNOSIS AND TESTING, AUTOMATIC TRANSMISSION	21-243,21-71
DIAGNOSIS AND TESTING, AUTOMATIC ZONE CONTROL SYSTEM	24-18
DIAGNOSIS AND TESTING, AXLE	3-17,3-50,3-89
DIAGNOSIS AND TESTING, BASE BRAKE SYSTEM	5-2
DIAGNOSIS AND TESTING, BATTERY	8F-8
DIAGNOSIS AND TESTING, BATTERY CABLE	8F-21
DIAGNOSIS AND TESTING, BATTERY SYSTEM	8F-2
DIAGNOSIS AND TESTING, BLOWER MOTOR	24-37
DIAGNOSIS AND TESTING, BLOWER MOTOR RESISTOR BLOCK	24-28
DIAGNOSIS AND TESTING, BLOWER MOTOR SWITCH-MANUAL TEMPERATURE CONTROL SYSTEM	24-29
DIAGNOSIS AND TESTING, BODY CONTROL MODULE	8E-6
DIAGNOSIS AND TESTING, BRAKE FLUID CONTAMINATION	5-20
DIAGNOSIS AND TESTING, BRAKE INDICATOR	8J-15
DIAGNOSIS AND TESTING, BRAKE LAMP SWITCH	8L-5
DIAGNOSIS AND TESTING, BRAKE LINE AND HOSES	5-7
DIAGNOSIS AND TESTING, BRAKE TRANSMISSION SHIFT INTERLOCK	21-127, 21-290
DIAGNOSIS AND TESTING, CAUSES OF BURNT FLUID	21-136,21-292
DIAGNOSIS AND TESTING, CCV SYSTEM - 4.0L	25-26
DIAGNOSIS AND TESTING, CD CHANGER	8A-11

Description	Group-Page
DIAGNOSIS AND TESTING, CHARGING SYSTEM	8F-28
DIAGNOSIS AND TESTING, CHIME WARNING SYSTEM	8B-3
DIAGNOSIS AND TESTING, COMPRESSOR CLUTCH COIL	24-13
DIAGNOSIS AND TESTING, COMPRESSOR NOISE	24-57
DIAGNOSIS AND TESTING, CONVERTER HOUSING FLUID LEAK	21-246,21-78
DIAGNOSIS AND TESTING, COOLING SYSTEM DEAERATION	7-13
DIAGNOSIS AND TESTING, COOLING SYSTEM DIAGNOSIS CHART	7-5
DIAGNOSIS AND TESTING, COOLING SYSTEM TESTING FOR LEAKS	7-12
DIAGNOSIS AND TESTING, CYLINDER COMBUSTION PRESSURE LEAKAGE	9-70,9-8
DIAGNOSIS AND TESTING, CYLINDER COMPRESSION PRESSURE	9-8
DIAGNOSIS AND TESTING, CYLINDER COMPRESSION PRESSURE TEST	9-69
DIAGNOSIS AND TESTING, CYLINDER HEAD GASKET	9-83,9-96
DIAGNOSIS AND TESTING, DIAGNOSIS CHARTS	21-78
DIAGNOSIS AND TESTING, DOOR AJAR SWITCH	8L-33
DIAGNOSIS AND TESTING, DOOR MODULE	8E-12
DIAGNOSIS AND TESTING, EFFECTS OF INCORRECT FLUID LEVEL	21-136,21-292
DIAGNOSIS AND TESTING, ELECTRIC COOLING FAN	7-47
DIAGNOSIS AND TESTING, ENGINE BLOCK HEATER	7-33
DIAGNOSIS AND TESTING, ENGINE DIAGNOSIS - INTRODUCTION	9-3,9-64
DIAGNOSIS AND TESTING, ENGINE OIL LEAK	9-51
DIAGNOSIS AND TESTING, ENGINE OIL LEAK INSPECTION	9-128
DIAGNOSIS AND TESTING, ENGINE OIL PRESSURE	9-127,9-51
DIAGNOSIS AND TESTING, EXHAUST SYSTEM	11-3
DIAGNOSIS AND TESTING, FLUID CONTAMINATION	21-136,21-293
DIAGNOSIS AND TESTING, FRONT WIPER & WASHER SYSTEM	8R-4
DIAGNOSIS AND TESTING, FUEL GAUGE SENDING UNIT	14-7
DIAGNOSIS AND TESTING, FUEL INJECTOR TEST	14-39
DIAGNOSIS AND TESTING, FUEL PRESSURE LEAK DOWN TEST	14-2
DIAGNOSIS AND TESTING, FUEL PUMP AMPERAGE TEST	14-9
DIAGNOSIS AND TESTING, FUEL PUMP CAPACITY TEST	14-9
DIAGNOSIS AND TESTING, FUEL PUMP PRESSURE TEST	14-11
DIAGNOSIS AND TESTING, GEARSHIFT CABLE	21-145,21-296
DIAGNOSIS AND TESTING, HEADLAMP	8L-13
DIAGNOSIS AND TESTING, HEADLAMP SWITCH	8L-17
DIAGNOSIS AND TESTING, HEATED MIRRORS	8G-1
DIAGNOSIS AND TESTING, HEATER PERFORMANCE	24-6
DIAGNOSIS AND TESTING, HOOD AJAR SWITCH	8Q-9
DIAGNOSIS AND TESTING, HORN	8H-3
DIAGNOSIS AND TESTING, HORN RELAY	8H-5
DIAGNOSIS AND TESTING, HORN SWITCH	8H-6
DIAGNOSIS AND TESTING, HORN SYSTEM	8H-2
DIAGNOSIS AND TESTING, HYDRAULIC LASH ADJUSTER NOISE DIAGNOSIS	9-83,9-97
DIAGNOSIS AND TESTING, HYDRAULIC PRESSURE TEST	21-245,21-74
DIAGNOSIS AND TESTING, IGNITION SWITCH	19-11
DIAGNOSIS AND TESTING, INSTRUMENT CLUSTER	8J-5
DIAGNOSIS AND TESTING, INTAKE MANIFOLD LEAKAGE	9-136
DIAGNOSIS AND TESTING, INTAKE MANIFOLD LEAKAGE DIAGNOSIS	9-57
DIAGNOSIS AND TESTING, KEY-IN IGNITION SWITCH	19-12
DIAGNOSIS AND TESTING, LEFT MULTI-FUNCTION SWITCH	8L-23
DIAGNOSIS AND TESTING, LIFTGATE FLIP-UP GLASS POWER RELEASE SYSTEM	8N-6
DIAGNOSIS AND TESTING, MASTER CYLINDER/POWER BOOSTER	5-21
DIAGNOSIS AND TESTING, ON-BOARD DIAGNOSTICS (OBD)	7-4
DIAGNOSIS AND TESTING, OVERDRIVE ELECTRICAL CONTROLS	21-153
DIAGNOSIS AND TESTING, PARKING BRAKE	5-29
DIAGNOSIS AND TESTING, PARK/ NEUTRAL POSITION SWITCH	21-175
DIAGNOSIS AND TESTING, PART TIME INDICATOR	8J-27
DIAGNOSIS AND TESTING, PCV VALVE/PCV SYSTEM - 4.7L	25-30
DIAGNOSIS AND TESTING, POWER LOCK MOTOR	8N-7
DIAGNOSIS AND TESTING, POWER LOCK SYSTEM	8N-5
DIAGNOSIS AND TESTING, POWER MIRRORS	8N-11
DIAGNOSIS AND TESTING, POWER STEERING SYSTEM DIAGNOSIS CHARTS	19-2
DIAGNOSIS AND TESTING, POWER WINDOW SWITCH	8N-36
DIAGNOSIS AND TESTING, POWER WINDOWS	8N-33
DIAGNOSIS AND TESTING, PRELIMINARY	21-71
DIAGNOSIS AND TESTING, PRELIMINARY CHECKS	7-4
DIAGNOSIS AND TESTING, PRELIMINARY DIAGNOSIS	21-244
DIAGNOSIS AND TESTING, PRESSURE GAUGES	22-7
DIAGNOSIS AND TESTING PROCEDURES, HEADLAMP	8L-16
DIAGNOSIS AND TESTING, PROPELLER SHAFT	3-2
DIAGNOSIS AND TESTING, PUMP LEAKAGE	19-37
DIAGNOSIS AND TESTING, RADIATOR PRESSURE CAP	7-53
DIAGNOSIS AND TESTING, RADIO	8A-14
DIAGNOSIS AND TESTING, REAR DISC BRAKE ROTOR	5-27
DIAGNOSIS AND TESTING, REAR SEAL AREA LEAKS	9-128,9-9
DIAGNOSIS AND TESTING, REAR WINDOW DEFOGGER GRID	8G-15
DIAGNOSIS AND TESTING, REAR WINDOW DEFOGGER RELAY	8G-17
DIAGNOSIS AND TESTING, REAR WINDOW DEFOGGER SWITCH	8G-19
DIAGNOSIS AND TESTING, REAR WIPER & WASHER SYSTEM	8R-33
DIAGNOSIS AND TESTING, RED BRAKE WARNING LAMP	5-7
DIAGNOSIS AND TESTING, REFRIGERANT SYSTEM LEAKS	24-53
DIAGNOSIS AND TESTING, REMOTE KEYLESS ENTRY SYSTEM	8N-6
DIAGNOSIS AND TESTING, REMOTE KEYLESS ENTRY TRANSMITTER	8N-8
DIAGNOSIS AND TESTING, REMOTE SWITCHES	8A-18
DIAGNOSIS AND TESTING, RIGHT MULTI-FUNCTION SWITCH	8R-18
DIAGNOSIS AND TESTING, ROAD TEST	8P-2
DIAGNOSIS AND TESTING, ROAD TESTING	21-244,21-72
DIAGNOSIS AND TESTING, SEAT BELT SWITCH	8O-25
DIAGNOSIS AND TESTING, SENTRY KEY IMMOBILIZER SYSTEM	8Q-5
DIAGNOSIS AND TESTING, SERPENTINE DRIVE BELT	7-18,7-21
DIAGNOSIS AND TESTING, SERVICE DIAGNOSIS - LUBRICATION	9-68
DIAGNOSIS AND TESTING, SERVICE DIAGNOSIS - MECHANICAL	9-67
DIAGNOSIS AND TESTING, SERVICE DIAGNOSIS - PERFORMANCE	9-65
DIAGNOSIS AND TESTING, SERVICE DIAGNOSIS (MECHANICAL)	9-6
DIAGNOSIS AND TESTING, SERVICE DIAGNOSIS (PERFORMANCE)	9-4
DIAGNOSIS AND TESTING, SIDEVIEW MIRROR	8N-14
DIAGNOSIS AND TESTING, SPARK PLUG CONDITIONS	8I-13
DIAGNOSIS AND TESTING, SPEAKER	8A-20
DIAGNOSIS AND TESTING, STARTER MOTOR	8F-40
DIAGNOSIS AND TESTING, STARTER RELAY	8F-42
DIAGNOSIS AND TESTING, STARTING SYSTEM	8F-34
DIAGNOSIS AND TESTING, STEERING FLOW AND PRESSURE	19-4
DIAGNOSIS AND TESTING, SUSPENSION AND STEERING SYSTEM	2-2
DIAGNOSIS AND TESTING, THERMOSTAT	7-37
DIAGNOSIS AND TESTING, TIRE AND WHEEL RUNOUT	22-1
DIAGNOSIS AND TESTING, TIRE NOISE OR VIBRATION	22-7
DIAGNOSIS AND TESTING, TIRE WEAR PATTERNS	22-7
DIAGNOSIS AND TESTING, TRAC-LOK™	3-114, 3-77
DIAGNOSIS AND TESTING, TRANS OIL COOLER FLOW	7-55
DIAGNOSIS AND TESTING, TRANSFER CASE - NV242	21-2
DIAGNOSIS AND TESTING, TRANSFER CASE - NV247	21-39
DIAGNOSIS AND TESTING, TREAD WEAR INDICATORS	22-7
DIAGNOSIS AND TESTING, TURN SIGNAL & HAZARD WARNING SYSTEM	8L-3
DIAGNOSIS AND TESTING, TURN SIGNAL INDICATORS	8J-31
DIAGNOSIS AND TESTING, VACUUM LINES	25-32
DIAGNOSIS AND TESTING, VACUUM SUPPLY TEST	8P-8
DIAGNOSIS AND TESTING, VACUUM SYSTEM	24-10
DIAGNOSIS AND TESTING, VEHICLE THEFT SECURITY SYSTEM	8Q-4
DIAGNOSIS AND TESTING, VISCOUS FAN DRIVE	7-40
DIAGNOSIS AND TESTING, VISUAL INSPECTION	14-27
DIAGNOSIS AND TESTING, VTSS INDICATOR	8Q-13
DIAGNOSIS AND TESTING, WATER LEAKS	23-1
DIAGNOSIS AND TESTING, WATER PUMP	7-48,7-50
DIAGNOSIS AND TESTING, WHEEL INSPECTION	22-9
DIAGNOSIS AND TESTING, WIND NOISE	23-2
DIAGNOSIS AND TESTING, WINDOW DEFOGGER	8G-14
DIAGNOSIS AND TESTING, WINDOW MOTOR	8N-37
DIAGNOSIS AND TESTING, WIPER HIGH/LOW RELAY	8R-25
DIAGNOSIS AND TESTING, WIPER ON/OFF RELAY	8R-28
DIAGNOSIS AND TESTING, WIRING HARNESS	8W-4
DIAGNOSIS AND TETSING, FRONT DISC BRAKE ROTOR	5-26
DIAGNOSIS CHART - DIAGNOSIS AND TESTING, COOLING SYSTEM	7-5
DIAGNOSIS CHARTS - DIAGNOSIS AND TESTING	21-78
DIAGNOSIS CHARTS - DIAGNOSIS AND TESTING, POWER STEERING SYSTEM	19-2
DIAGNOSIS (MECHANICAL) - DIAGNOSIS AND TESTING, SERVICE	9-6

Description	Group-Page
DIAGNOSIS (PERFORMANCE) - DIAGNOSIS AND TESTING, SERVICE	9-4
DIAGNOSISI AND TESTING, REAR SUSPENSION	2-16
DIAGNOSTIC TROUBLE CODES - DESCRIPTION	25-2
DIAGNOSTICS (OBD) - DIAGNOSIS AND TESTING, ON-BOARD	7-4
DIAGRAMS - DESCRIPTION, HOW TO USE WIRING	8W-1
DIAGRAMS - HYDRAULIC SCHEMATICS, SCHEMATICS	21-107,21-262
DIFFERENTIAL - ASSEMBLY	3-113,3-41,3-75
DIFFERENTIAL - DISASSEMBLY	3-113,3-40,3-75
DIFFERENTIAL - INSTALLATION	3-113,3-41,3-75
DIFFERENTIAL - REMOVAL	3-111,3-39,3-73
DIFFERENTIAL - TRAC-LOC™ - ASSEMBLY	3-79
DIFFERENTIAL - TRAC-LOC™ - DISASSEMBLY	3-77
DIFFERENTIAL - TRAC-LOK™ - ASSEMBLY	3-117
DIFFERENTIAL - TRAC-LOK™ - DISASSEMBLY	3-115
DIFFERENTIAL CASE BEARINGS - INSTALLATION	3-119,3-43,3-81
DIFFERENTIAL CASE BEARINGS - REMOVAL	3-119,3-42,3-81
DIMENSIONS, SPECIFICATIONS - BODY OPENING	23-89
DIMENSIONS, SPECIFICATIONS - FRAME	13-4
DIODE - INSTALLATION	8W-10
DIODE - REMOVAL	8W-10
DIODE REPLACEMENT - STANDARD PROCEDURE	24-7
DISASSEMBLE, OIL PUMP	9-133
DISASSEMBLY, 4C RETAINER/BULKHEAD	21-287
DISASSEMBLY, AUTOMATIC TRANSMISSION - 42RE	21-93
DISASSEMBLY, AUTOMATIC TRANSMISSION - 545RFE	21-248
DISASSEMBLY, DIFFERENTIAL	3-113,3-40,3-75
DISASSEMBLY, DIFFERENTIAL - TRAC-LOC™	3-77
DISASSEMBLY, DIFFERENTIAL - TRAC-LOK™	3-115
DISASSEMBLY, DOUBLE CARDAN UNIVERSAL JOINTS	3-10
DISASSEMBLY, DRIVER AIRBAG	8O-15
DISASSEMBLY, FRONT CLUTCH	21-141
DISASSEMBLY, FRONT DISC BRAKE CALIPER	5-14
DISASSEMBLY, FRONT SERVO	21-144
DISASSEMBLY, HVAC HOUSING	24-41
DISASSEMBLY, INPUT CLUTCH ASSEMBLY	21-302
DISASSEMBLY, INSTRUMENT CLUSTER	8J-8
DISASSEMBLY, LOW/REVERSE CLUTCH	21-311
DISASSEMBLY, OIL PUMP	21-148,21-315
DISASSEMBLY, OVERDRIVE UNIT	21-154
DISASSEMBLY, OVERRUNNING CLUTCH CAM/OVERDRIVE PISTON RETAINER	21-172
DISASSEMBLY, PLANETARY GEARTRAIN	21-323
DISASSEMBLY, PLANETARY GEARTRAIN/ OUTPUT SHAFT	21-178
DISASSEMBLY, POWER DISTRIBUTION CENTER - PDC & COMPONENTS	8W-8
DISASSEMBLY, REAR CLUTCH	21-184
DISASSEMBLY, REAR DISC BRAKE CALIPER	5-16
DISASSEMBLY, REAR SERVO	21-187
DISASSEMBLY, SINGLE CARDAN UNIVERSAL JOINTS	3-9
DISASSEMBLY, TRANSFER CASE - NV242	21-3
DISASSEMBLY, TRANSFER CASE - NV247	21-40
DISASSEMBLY, VALVE BODY	21-217,21-337
DISC BRAKE CALIPER - ASSEMBLY, FRONT	5-18
DISC BRAKE CALIPER - ASSEMBLY, REAR	5-18
DISC BRAKE CALIPER - CLEANING	5-17
DISC BRAKE CALIPER - DISASSEMBLY, FRONT	5-14
DISC BRAKE CALIPER - DISASSEMBLY, REAR	5-16
DISC BRAKE CALIPER - INSPECTION	5-17
DISC BRAKE CALIPER - INSTALLATION, FRONT	5-19
DISC BRAKE CALIPER - INSTALLATION, REAR	5-20
DISC BRAKE CALIPER - REMOVAL, FRONT	5-13
DISC BRAKE CALIPER - REMOVAL, REAR	5-14
DISC BRAKE ROTOR - DIAGNOSIS AND TESTING, REAR	5-27
DISC BRAKE ROTOR - DIAGNOSIS AND TETSING, FRONT	5-26
DISC BRAKE ROTOR - INSTALLATION, FRONT	5-28
DISC BRAKE ROTOR - INSTALLATION, REAR	5-28
DISC BRAKE ROTOR - REMOVAL, FRONT	5-27
DISC BRAKE ROTOR - REMOVAL, REAR	5-28
DISC BRAKE SHOES - DESCRIPTION, FRONT	5-8
DISC BRAKE SHOES - DESCRIPTION, REAR	5-8
DISC BRAKE SHOES - INSTALLATION, FRONT	5-12
DISC BRAKE SHOES - INSTALLATION, REAR	5-12
DISC BRAKE SHOES - OPERATION, FRONT	5-9
DISC BRAKE SHOES - OPERATION, REAR	5-9
DISC BRAKE SHOES - REMOVAL, FRONT	5-10
DISC BRAKE SHOES - REMOVAL, REAR	5-10
DISC ROTOR MACHINING - STANDARD PROCEDURES	5-27
DISCHARGE LINE - INSTALLATION, A/C	24-61
DISCHARGE LINE - REMOVAL, A/C	24-61
DISPLAY TEST MODE - DESCRIPTION, STATE	25-1
DISTRIBUTION - DESCRIPTION, POWER	8W-1
DISTRIBUTION CENTER - DESCRIPTION, POWER	8W-7
DISTRIBUTION CENTER - INSTALLATION, POWER	8W-12
DISTRIBUTION CENTER - OPERATION, POWER	8W-8
DISTRIBUTION CENTER - PDC & COMPONENTS ASSEMBLY, POWER	8W-11
DISTRIBUTION CENTER - PDC & COMPONENTS DISASSEMBLY, POWER	8W-8
DISTRIBUTION CENTER - REMOVAL, POWER	8W-8
DISTRIBUTION DUCTS - INSTALLATION, FLOOR	24-39
DISTRIBUTION DUCTS - REMOVAL, FLOOR	24-39
DISTRIBUTION SYSTEM - OPERATION, POWER	8W-1
DISTRIBUTION SYSTEMS, SPECIAL TOOLS - POWER	8W-2
DOOR - DOOR ADJUSTMENT	23-100
DOOR - INSTALLATION	23-100,23-108
DOOR - INSTALLATION, BLEND	24-46
DOOR - INSTALLATION, FRONT	23-114
DOOR - INSTALLATION, FUEL FILL	23-117
DOOR - INSTALLATION, HEAT/DEFROST	24-49
DOOR - INSTALLATION, PANEL OUTLET	24-49
DOOR - INSTALLATION, PANEL/DEFROST	24-49
DOOR - INSTALLATION, POWER OUTLET	23-156
DOOR - INSTALLATION, REAR	23-114
DOOR - INSTALLATION, RECIRCULATION	24-50
DOOR - REMOVAL	23-100,23-108
DOOR - REMOVAL, BLEND	24-46
DOOR - REMOVAL, FRONT	23-113
DOOR - REMOVAL, FUEL FILL	23-117
DOOR - REMOVAL, HEAT/DEFROST	24-47
DOOR - REMOVAL, PANEL OUTLET	24-46
DOOR - REMOVAL, PANEL/DEFROST	24-48
DOOR - REMOVAL, POWER OUTLET	23-155
DOOR - REMOVAL, REAR	23-113
DOOR - REMOVAL, RECIRCULATION	24-49
DOOR ACTUATOR - DESCRIPTION, BLEND	24-30
DOOR ACTUATOR - DESCRIPTION, MODE	24-31
DOOR ACTUATOR - DESCRIPTION, RECIRCULATION	24-33
DOOR ACTUATOR - INSTALLATION, BLEND	24-31
DOOR ACTUATOR - REMOVAL, BLEND	24-30
DOOR ADJUSTMENT, DOOR	23-100
DOOR AJAR SWITCH - DESCRIPTION	8L-32
DOOR AJAR SWITCH - DESCRIPTION, DRIVER	8L-33
DOOR AJAR SWITCH - DIAGNOSIS AND TESTING	8L-33
DOOR AJAR SWITCH - OPERATION	8L-33
DOOR AJAR SWITCH - OPERATION, DRIVER	8L-33
DOOR CYLINDER LOCK / UNLOCK SWITCH - DESCRIPTION	8N-7
DOOR CYLINDER LOCK / UNLOCK SWITCH - OPERATION	8N-7
DOOR ELECTRIC ACTUATOR - INSTALLATION, HEAT/DEFROST - PANEL/DEFROST	24-32
DOOR ELECTRIC ACTUATOR - INSTALLATION, RECIRCULATION	24-34
DOOR ELECTRIC ACTUATOR - REMOVAL, HEAT/DEFROST - PANEL/DEFROST	24-31
DOOR ELECTRIC ACTUATOR - REMOVAL, RECIRCULATION	24-34
DOOR GLASS - INSTALLATION	23-100,23-108, 23-182
DOOR GLASS - REMOVAL	23-100,23-108, 23-182
DOOR GLASS RUN WEATHERSTRIP - INSTALLATION, FRONT	23-187
DOOR GLASS RUN WEATHERSTRIP - REMOVAL, FRONT	23-187
DOOR INNER BELT WEATHERSTRIP - INSTALLATION, FRONT	23-187
DOOR INNER BELT WEATHERSTRIP - INSTALLATION, REAR	23-190
DOOR INNER BELT WEATHERSTRIP - REMOVAL, FRONT	23-187
DOOR INNER BELT WEATHERSTRIP - REMOVAL, REAR	23-190
DOOR LOCKS - INSPECTION, DOORS	30-8
DOOR MODULE - DESCRIPTION	8E-10
DOOR MODULE - DIAGNOSIS AND TESTING	8E-12
DOOR MODULE - INSTALLATION	8E-13
DOOR MODULE - OPERATION	8E-11
DOOR MODULE - REMOVAL	8E-13
DOOR OPENER - DIAGNOSIS & TESTING, UNIVERSAL GARAGE	8M-10
DOOR OUTER BELT WEATHERSTRIP - INSTALLATION, FRONT	23-188
DOOR OUTER BELT WEATHERSTRIP - INSTALLATION, REAR	23-190
DOOR OUTER BELT WEATHERSTRIP - REMOVAL, FRONT	23-188
DOOR OUTER BELT WEATHERSTRIP - REMOVAL, REAR	23-190
DOOR SEAL - INSTALLATION, B-PILLAR	23-186
DOOR SEAL - REMOVAL, B-PILLAR	23-186
DOOR SECOND WEATHERSTRIP - INSTALLATION, FRONT	23-188
DOOR SECOND WEATHERSTRIP - REMOVAL, FRONT	23-188
DOOR SECONDARY WEATHERSTRIP - INSTALLATION, REAR	23-191
DOOR SECONDARY WEATHERSTRIP - REMOVAL, REAR	23-190
DOOR SILL SCUFF PLATE - INSTALLATION	23-163
DOOR SILL SCUFF PLATE - REMOVAL	23-163
DOOR SILL TRIM - INSTALLATION	23-163
DOOR SILL TRIM - REMOVAL	23-163
DOOR SPEAKER - INSTALLATION, FRONT	8A-23
DOOR SPEAKER - INSTALLATION, REAR	8A-22
DOOR SPEAKER, SPEAKER - FRONT	8A-22
DOOR SPEAKER, SPEAKER - REAR	8A-22
DOOR SPRING - INSTALLATION, CIGAR LIGHTER OUTLET	8W-3
DOOR SPRING - REMOVAL, CIGAR LIGHTER OUTLET	8W-3
DOOR VACUUM ACTUATOR - INSTALLATION, HEAT/DEFROST	24-33
DOOR VACUUM ACTUATOR - INSTALLATION, PANEL/DEFROST	24-33
DOOR VACUUM ACTUATOR - INSTALLATION, RECIRCULATION	24-34
DOOR VACUUM ACTUATOR - REMOVAL, HEAT/DEFROST	24-32
DOOR VACUUM ACTUATOR - REMOVAL, PANEL/DEFROST	24-32

Description	Group-Page
DOOR VACUUM ACTUATOR - REMOVAL, RECIRCULATION	24-33
DOOR WEATHERSTRIP - INSTALLATION, FRONT	23-189
DOOR WEATHERSTRIP - INSTALLATION, REAR	23-191
DOOR WEATHERSTRIP - REMOVAL, FRONT	23-188
DOOR WEATHERSTRIP - REMOVAL, REAR	23-191
DOORS AND DOOR LOCKS - INSPECTION	30-8
DOORS AND LOCKS - INSPECTION, WINDOWS	30-10
DOUBLE CARDAN UNIVERSAL JOINTS - ASSEMBLY	3-11
DOUBLE CARDAN UNIVERSAL JOINTS - DISASSEMBLY	3-10
DOUBLE INVERTED FLARING - STANDARD PROCEDURE	5-7
D-PILLAR AIR EXHAUSTER - INSTALLATION	23-115
D-PILLAR AIR EXHAUSTER - REMOVAL	23-115
D-PILLAR APPLIQUE - INSTALLATION	23-115
D-PILLAR APPLIQUE - REMOVAL	23-115
D-PILLAR TRIM - INSTALLATION	23-163
D-PILLAR TRIM - REMOVAL	23-163
DRAG LINK - DESCRIPTION	19-33
DRAG LINK - INSTALLATION	19-33
DRAG LINK - OPERATION	19-33
DRAG LINK - REMOVAL	19-33
DRAINBACK VALVE - DESCRIPTION, TORQUE CONVERTER	21-198
DRAINBACK VALVE - OPERATION, TORQUE CONVERTER	21-198
DRAINBACK VALVE - STANDARD PROCEDURES, TORQUE CONVERTER	21-198
DRAINING COOLING SYSTEM - 4.0L ENGINE - STANDARD PROCEDURE	7-14
DRAINING COOLING SYSTEM 4.7L ENGINE - STANDARD PROCEDURES	7-13
DRAW FUSE - DESCRIPTION, IGNITION-OFF	8W-3
DRAW FUSE - INSTALLATION, IGNITION-OFF	8W-4
DRAW FUSE - OPERATION, IGNITION-OFF	8W-3
DRAW FUSE - REMOVAL, IGNITION-OFF	8W-4
DRAW TEST - STANDARD PROCEDURE, IGNITION-OFF	8F-16
DRAW WIRE HARNESS CONNECTOR - DESCRIPTION, IGNITION-OFF	8W-17
DRAW WIRE HARNESS CONNECTOR - OPERATION, IGNITION-OFF	8W-18
DRILLING AND WELDING - STANDARD PROCEDURES	23-3
DRIVE - DIAGNOSIS AND TESTING, VISCOUS FAN	7-40
DRIVE BELT - DIAGNOSIS AND TESTING, SERPENTINE	7-18,7-21
DRIVE SYSTEM - DESCRIPTION, TIMING	9-140
DRIVE SYSTEM - OPERATION, TIMING	9-141
DRIVE VISCOUS CLUTCH - 4.0L - DESCRIPTION, FAN	7-39
DRIVE VISCOUS CLUTCH - 4.0L - OPERATION, FAN	7-40
DRIVER - INSTALLATION, INTRUMENT PANEL TRIM BEZEL	23-154
DRIVER - REMOVAL, INTRUMENT PANEL TRIM BEZEL	23-154
DRIVER AIRBAG - ASSEMBLY	8O-16
DRIVER AIRBAG - DESCRIPTION	8O-13
DRIVER AIRBAG - DISASSEMBLY	8O-15
DRIVER AIRBAG - INSTALLATION	8O-17
DRIVER AIRBAG - OPERATION	8O-14
DRIVER AIRBAG - REMOVAL	8O-14
DRIVER DOOR AJAR SWITCH - DESCRIPTION	8L-33
DRIVER DOOR AJAR SWITCH - OPERATION	8L-33
DRIVER HEATED SEAT SWITCH - DESCRIPTION	8G-5
DRIVER HEATED SEAT SWITCH - INSTALLATION	8G-7
DRIVER HEATED SEAT SWITCH - OPERATION	8G-5
DRIVER HEATED SEAT SWITCH - REMOVAL	8G-6
DRIVER SEAT SWITCH - DESCRIPTION	8N-19
DRIVER SEAT SWITCH - INSTALLATION	8N-22
DRIVER SEAT SWITCH - OPERATION	8N-20
DRIVER SEAT SWITCH - REMOVAL	8N-22
DROP - STANDARD PROCEDURE, TESTING FOR A VOLTAGE	8W-7
DUCT - INSTALLATION, INSTRUMENT PANEL STUCTURAL	23-140
DUCT - INSTALLATION, REAR FLOOR HEAT	24-41
DUCT - REMOVAL, INSTRUMENT PANEL STUCTURAL	23-140
DUCT - REMOVAL, REAR FLOOR HEAT	24-40
DUCTS - INSTALLATION, DEFROSTER	24-39
DUCTS - INSTALLATION, FLOOR DISTRIBUTION	24-39
DUCTS - INSTALLATION, INSTRUMENT PANEL	24-39
DUCTS - REMOVAL, DEFROSTER	24-38
DUCTS - REMOVAL, FLOOR DISTRIBUTION	24-39
DUCTS - REMOVAL, INSTRUMENT PANEL	24-39
EFFECTS OF INCORRECT FLUID LEVEL - DIAGNOSIS AND TESTING	21-136,21-292
ELECTRIC ACTUATOR - INSTALLATION, HEAT/DEFROST - PANEL/DEFROST DOOR	24-32
ELECTRIC ACTUATOR - INSTALLATION, RECIRCULATION DOOR	24-34
ELECTRIC ACTUATOR - REMOVAL, HEAT/DEFROST - PANEL/DEFROST DOOR	24-31
ELECTRIC ACTUATOR - REMOVAL, RECIRCULATION DOOR	24-34
ELECTRIC BRAKE - DESCRIPTION	5-38
ELECTRIC BRAKE - OPERATION	5-38
ELECTRIC COOLING FAN - DIAGNOSIS AND TESTING	7-47
ELECTRICAL CONTROLS - DIAGNOSIS AND TESTING, OVERDRIVE	21-153
ELECTROLYTE LEVEL - STANDARD PROCEDURE, CHECKING BATTERY	8F-9
ELECTRONIC FEATURES - DESCRIPTION, PROGRAMMABLE	30-15
ELECTRONIC FEATURES - OPERATION, PROGRAMMABLE	30-15
ELECTRONIC GOVERNOR - DESCRIPTION	21-130
ELECTRONIC GOVERNOR - INSTALLATION	21-134
ELECTRONIC GOVERNOR - OPERATION	21-132
ELECTRONIC GOVERNOR - REMOVAL	21-133
ELECTRONIC VEHICLE INFO CENTER - DESCRIPTION	8M-6
ELECTRONIC VEHICLE INFO CENTER - DIAGNOSIS & TESTING–ELECTRONIC VEHICLE INFORMATION CENTER	8M-8
ELECTRONIC VEHICLE INFO CENTER - INSTALLATION	8M-9
ELECTRONIC VEHICLE INFO CENTER - OPERATION	8M-8
ELECTRONIC VEHICLE INFO CENTER - REMOVAL	8M-9
ELECTRONIC VEHICLE INFORMATION CENTER PROGRAMMING - STANDARD PROCEDURE	8M-2
ELEMENT - DESCRIPTION, HEATED SEAT	8G-7
ELEMENT - DIAGNOSIS & TESTING, HEATED SEAT	8G-7
ELEMENT - OPERATION, HEATED SEAT	8G-7
EMERGENCY SIGNALS - INSPECTION, TURN	30-14
EMERGENCY TOW HOOKS - DESCRIPTION	0-14
EMISSION CONTROL SYSTEM - DESCRIPTION	25-1
END - DESCRIPTION, TIE ROD	19-34
END - INSTALLATION, TIE ROD	19-34
END - OPERATION, TIE ROD	19-34
END - REMOVAL, TIE ROD	19-34
END CAP - INSTALLATION, INSTRUMENT PANEL	23-140
END CAP - REMOVAL, INSTRUMENT PANEL	23-139
END PLAY - STANDARD PROCEDURE, CRANKSHAFT	9-110
ENGINE - 4.0L - DESCRIPTION	9-2
ENGINE - 4.0L - INSTALLATION	9-13
ENGINE - 4.0L - REMOVAL	9-12
ENGINE - DESCRIPTION, 4.0L	7-32,7-36
ENGINE - DESCRIPTION, 4.7L	7-32,7-36
ENGINE - DESCRIPTION, 4.7L	9-64
ENGINE - DESCRIPTION, CATALYTIC CONVERTER 4.0L	11-4
ENGINE - DESCRIPTION, COOLING SYSTEM 4.0L	7-3
ENGINE - DESCRIPTION, COOLING SYSTEM 4.7L	7-1
ENGINE - DESCRIPTION, COOLING SYSTEM ROUTING 4.0L	7-3
ENGINE - DESCRIPTION, COOLING SYSTEM ROUTING 4.7L	7-1
ENGINE - DESCRIPTION, EXHAUST SYSTEM 4.0L	11-1
ENGINE - ENGINE FIRING ORDER, 4.0L 6-CYLINDER	8I-2
ENGINE - ENGINE FIRING ORDER, 4.7L V-8	8I-2
ENGINE - IGNITION COIL RESISTANCE, 4.0L	8I-2
ENGINE - IGNITION COIL RESISTANCE, 4.7L V-8	8I-2
ENGINE - INSTALLATION, 4.0L	7-18,7-20,7-34, 7-36,7-38
ENGINE - INSTALLATION, 4.0L	19-38
ENGINE - INSTALLATION, 4.7L	7-18,7-23,7-34, 7-36,7-38
ENGINE - INSTALLATION, 4.7L	19-38
ENGINE - REMOVAL, 4.0L	7-17,7-20,7-34,7-35, 7-37
ENGINE - REMOVAL, 4.0L	19-38
ENGINE - REMOVAL, 4.7L	7-17,7-23,7-33,7-36, 7-38
ENGINE - REMOVAL, 4.7L	19-38
ENGINE - STANDARD PROCEDURE, DRAINING COOLING SYSTEM - 4.0L	7-14
ENGINE - STANDARD PROCEDURE, REFILLING COOLING SYSTEM - 4.0L	7-15
ENGINE - STANDARD PROCEDURES, DRAINING COOLING SYSTEM 4.7L	7-13
ENGINE - STANDARD PROCEDURES, REFILLING COOLING SYSTEM 4.7L	7-14
ENGINE - TORQUE, 4.0L	9-17
ENGINE, 4.0L	9-14
ENGINE 4.7L - INSTALLATION	9-74
ENGINE 4.7L - REMOVAL	9-72
ENGINE BLOCK - CLEANING	9-107,9-29
ENGINE BLOCK - DESCRIPTION	9-107
ENGINE BLOCK - INSPECTION	9-108,9-30
ENGINE BLOCK HEATER - DIAGNOSIS AND TESTING	7-33
ENGINE BLOCK HEATER - OPERATION	7-33
ENGINE COOLANT TEMP SENSOR - DESCRIPTION	7-35
ENGINE COOLANT TEMP SENSOR - OPERATION	7-35
ENGINE COOLANT THERMOSTAT - OPERATION	7-36
ENGINE CORE AND OIL GALLERY PLUGS - STANDARD PROCEDURE	9-11,9-72
ENGINE DIAGNOSIS - INTRODUCTION - DIAGNOSIS AND TESTING	9-3,9-64
ENGINE FIRING ORDER, 4.0L 6-CYLINDER ENGINE	8I-2
ENGINE FIRING ORDER, 4.7L V-8 ENGINE	8I-2
ENGINE GASKET SURFACE PREPARATION - STANDARD PROCEDURES	9-71
ENGINE OIL - DESCRIPTION	0-3
ENGINE OIL - STANDARD PROCEDURE	9-129
ENGINE OIL, FLUID TYPES	0-2
ENGINE OIL LEAK - DIAGNOSIS AND TESTING	9-51
ENGINE OIL LEAK INSPECTION - DIAGNOSIS AND TESTING	9-128
ENGINE OIL PRESSURE - DIAGNOSIS AND TESTING	9-127,9-51
ENGINE OIL PRESSURE SENSOR - DESCRIPTION	9-56
ENGINE OIL PRESSURE SENSOR - OPERATION	9-56
ENGINE OIL SERVICE - STANDARD PROCEDURE	9-53
ENGINE PERFORMANCE - INSPECTION	30-12

Description	Group-Page
ENGINE, SPECIAL TOOLS - 4.7L	9-78
ENGINE, SPECIFICATIONS - 4.7L	9-75
ENGINE TEMPERATURE GAUGE - DESCRIPTION	8J-17
ENGINE TEMPERATURE GAUGE - OPERATION	8J-18
ENGINE TIMING VERIFICATION - STANDARD PROCEDURE	9-142
ENGINE TO BODY GROUND STRAP - INSTALLATION	8A-17
ENGINE-TO-BODY GROUND STRAP - REMOVAL	8A-16
ENTRY - INSPECTION, KEYLESS	30-8
ENTRY MODULE - DESCRIPTION, REMOTE KEYLESS	8N-9
ENTRY MODULE - OPERATION, REMOTE KEYLESS	8N-9
ENTRY SYSTEM - DESCRIPTION, REMOTE KEYLESS	8N-2
ENTRY SYSTEM - DIAGNOSIS AND TESTING, REMOTE KEYLESS	8N-6
ENTRY SYSTEM - OPERATION, REMOTE KEYLESS	8N-4
ENTRY TRANSMITTER - DESCRIPTION, REMOTE KEYLESS	8N-8
ENTRY TRANSMITTER - DIAGNOSIS AND TESTING, REMOTE KEYLESS	8N-8
ENTRY TRANSMITTER - OPERATION, REMOTE KEYLESS	8N-8
EQUIPMENT - STANDARD PROCEDURE, REFRIGERANT SYSTEM SERVICE	24-54
EVACUATE - STANDARD PROCEDURE, REFRIGERANT SYSTEM	24-55
EVAPORATION CONTROL SYSTEM - DESCRIPTION	25-23
EVAPORATION SYSTEM, SPECIFICATIONS - TORQUE	25-26
EVAPORATOR - DESCRIPTION, A/C	24-63
EVAPORATOR - INSTALLATION, A/C	24-65
EVAPORATOR - OPERATION, A/C	24-63
EVAPORATOR - REMOVAL, A/C	24-64
EVAP/PURGE SOLENOID - DESCRIPTION	25-27
EVAP/PURGE SOLENOID - INSTALLATION	25-27
EVAP/PURGE SOLENOID - REMOVAL	25-27
EXHAUST MANIFOLD - DESCRIPTION	9-59
EXHAUST MANIFOLD - INSTALLATION	9-59
EXHAUST MANIFOLD - LEFT - CLEANING	9-138
EXHAUST MANIFOLD - LEFT - DESCRIPTION	9-137
EXHAUST MANIFOLD - LEFT - INSPECTION	9-138
EXHAUST MANIFOLD - LEFT - INSTALLATION	9-138
EXHAUST MANIFOLD - LEFT - REMOVAL	9-138
EXHAUST MANIFOLD - REMOVAL	9-59
EXHAUST MANIFOLD - RIGHT - CLEANING	9-139
EXHAUST MANIFOLD - RIGHT - DESCRIPTION	9-138
EXHAUST MANIFOLD - RIGHT - INSPECTION	9-139
EXHAUST MANIFOLD - RIGHT - INSTALLATION	9-139
EXHAUST MANIFOLD - RIGHT - REMOVAL	9-138
EXHAUST PIPE - 4.0L - INSPECTION	11-8
EXHAUST PIPE - 4.0L - INSTALLATION	11-9
EXHAUST PIPE - 4.0L - REMOVAL	11-8
EXHAUST PIPE - 4.7L - INSPECTION	11-10
EXHAUST PIPE - 4.7L - INSTALLATION	11-11
EXHAUST PIPE - 4.7L - REMOVAL	11-10
EXHAUST SYSTEM - DIAGNOSIS AND TESTING	11-3
EXHAUST SYSTEM 4.0L ENGINE - DESCRIPTION	11-1
EXHAUSTER - INSTALLATION, AIR	23-115
EXHAUSTER - INSTALLATION, D-PILLAR AIR	23-115
EXHAUSTER - REMOVAL, AIR	23-115
EXHAUSTER - REMOVAL, D-PILLAR AIR	23-115
EXHAUST-TO-BODY GROUND STRAP - INSTALLATION	8A-17
EXHAUST-TO-BODY GROUND STRAP - REMOVAL	8A-16
EXTENSION HOUSING BUSHING - INSTALLATION	21-135
EXTENSION HOUSING BUSHING - REMOVAL	21-135
EXTENSION HOUSING SEAL - INSTALLATION	21-135
EXTENSION HOUSING SEAL - REMOVAL	21-135
EXTERIOR HANDLE - INSTALLATION	23-101, 23-109,23-93
EXTERIOR HANDLE - REMOVAL	23-101,23-108, 23-93
EXTERIOR LAMPS, SPECIFICATIONS	8L-5
EXTERIOR NAME PLATES - INSTALLATION	23-115
EXTERIOR NAME PLATES - REMOVAL	23-115
FAN - 4.0L - CLEANING, RADIATOR	7-32
FAN - 4.0L - DESCRIPTION, RADIATOR	7-31
FAN - 4.0L - INSPECTION, RADIATOR	7-32
FAN - 4.0L - INSTALLATION, RADIATOR	7-32
FAN - 4.0L - REMOVAL, RADIATOR	7-31
FAN - 4.7L - CLEANING, RADIATOR	7-29
FAN - 4.7L - DESCRIPTION, RADIATOR	7-27
FAN - 4.7L - INSTALLATION, RADIATOR	7-29
FAN - 4.7L - OPERATION, RADIATOR	7-28
FAN - 4.7L - REMOVAL, RADIATOR	7-28
FAN - DIAGNOSIS AND TESTING, ELECTRIC COOLING	7-47
FAN CONTROL MODULE - 4.0L - DESCRIPTION, PWM	7-40
FAN CONTROL MODULE - 4.0L - INSTALLATION, PWM	7-42
FAN CONTROL MODULE - 4.0L - OPERATION, PWM	7-40
FAN CONTROL MODULE - 4.0L - REMOVAL, PWM	7-41
FAN DRIVE - DIAGNOSIS AND TESTING, VISCOUS	7-40
FAN DRIVE VISCOUS CLUTCH - 4.0L - DESCRIPTION	7-39
FAN DRIVE VISCOUS CLUTCH - 4.0L - OPERATION	7-40
FAN FLUID FILTER - DESCRIPTION, POWER STEERING/RADIATOR COOLING	19-35
FAN FLUID FILTER - OPERATION, POWER STEERING/RADIATOR COOLING	19-36
FASCIA - INSTALLATION, FRONT	13-1
FASCIA - INSTALLATION, REAR	13-4
FASCIA - REMOVAL, FRONT	13-1
FASCIA - REMOVAL, REAR	13-2
FASTENER IDENTIFICATION - DESCRIPTION	Intro.-1
FASTENER USAGE - DESCRIPTION	Intro.-4
FASTENERS - DESCRIPTION, COMPONENT	23-1
FEATURES - DESCRIPTION, PROGRAMMABLE ELECTRONIC	30-15
FEATURES - OPERATION, PROGRAMMABLE ELECTRONIC	30-15
FENDER - INSTALLATION, FRONT	23-116
FENDER - REMOVAL, FRONT	23-116
FENDER/QUARTER PANEL - INSTALLATION	23-114
FENDER/QUARTER PANEL - REMOVAL	23-113
FILL - STANDARD PROCEDURES, TRANSMISSION	21-139,21-295
FILL DOOR - INSTALLATION, FUEL	23-117
FILL DOOR - REMOVAL, FUEL	23-117
FILL/CHECK LOCATIONS - INSPECTION, FLUID	0-6
FILLER CAP - DESCRIPTION, FUEL	25-28
FILLER CAP - OPERATION, FUEL	25-28
FILLER CAP - REMOVAL, FUEL	25-28
FILTER - DESCRIPTION, POWER STEERING/RADIATOR COOLING FAN FLUID	19-35
FILTER - INSTALLATION, INLET	14-22
FILTER - INSTALLATION, OIL	9-131,9-54
FILTER - OPERATION, POWER STEERING/RADIATOR COOLING FAN FLUID	19-36
FILTER - REMOVAL, INLET	14-22
FILTER - REMOVAL, OIL	9-131,9-54
FILTER REPLACEMENT - STANDARD PROCEDURE, FLUID	21-137
FILTER REPLACEMENT - STANDARD PROCEDURES, FLUID	21-295
FILTER/PRESSURE REGULATOR - DESCRIPTION, FUEL	14-5
FILTER/PRESSURE REGULATOR - INSTALLATION, FUEL	14-6
FILTER/PRESSURE REGULATOR - OPERATION, FUEL	14-6
FILTER/PRESSURE REGULATOR - REMOVAL, FUEL	14-6
FINAL STEPS - NEW VEHICLE PREPARATION FORM	30-17
FINAL STEPS - OWNER CHECK OUT	30-17
FINISH - DESCRIPTION, BASE COAT/CLEAR COAT	23-170
FINISH - INSPECTION, FIT	30-8,30-9
FIRING ORDER, 4.0L 6-CYLINDER ENGINE - ENGINE	8I-2
FIRING ORDER, 4.7L V-8 ENGINE - ENGINE	8I-2
FIT AND FINISH - INSPECTION	30-8,30-9
FITTING - DESCRIPTION, QUICK CONNECT	14-22
FITTING - INSTALLATION, FIXED ORIFICE	25-27
FITTING - REMOVAL, FIXED ORIFICE	25-26
FITTING - STANDARD PROCEDURE, CONNECTING ROD BEARING	9-108
FITTING - STANDARD PROCEDURE, CRANKSHAFT MAIN BEARING	9-114
FITTING - STANDARD PROCEDURE, PISTON	9-117,9-44
FITTING - STANDARD PROCEDURE, PISTON RING	9-47
FITTING - STANDARD PROCEDURE, PISTON RING	9-120
FITTING CONNECTING ROD BEARINGS - STANDARD PROCEDURES	9-33
FITTING CRANKSHAFT MAIN BEARINGS - STANDARD PROCEDURE	9-36
FITTINGS - STANDARD PROCEDURES, QUICK-CONNECT	14-22
FIXED ORIFICE FITTING - INSTALLATION	25-27
FIXED ORIFICE FITTING - REMOVAL	25-26
FLARING - STANDARD PROCEDURE, DOUBLE INVERTED	5-7
FLARING - STANDARD PROCEDURE, ISO	5-8
FLASHER - DESCRIPTION, COMBINATION	8L-7
FLASHER - INSTALLATION, COMBINATION	8L-10
FLASHER - OPERATION, COMBINATION	8L-8
FLASHER - REMOVAL, COMBINATION	8L-9
FLEX PLATE - INSTALLATION	9-117
FLEX PLATE - REMOVAL	9-116
FLIP UP GLASS AJAR SWITCH - DESCRIPTION	8L-32
FLIP UP GLASS AJAR SWITCH - OPERATION	8L-33
FLIP-UP GLASS - INSTALLATION	23-94
FLIP-UP GLASS - REMOVAL	23-93
FLIP-UP GLASS LATCH - INSTALLATION	23-94
FLIP-UP GLASS LATCH - REMOVAL	23-94
FLIP-UP GLASS LATCH STRIKER - INSTALLATION	23-95
FLIP-UP GLASS LATCH STRIKER - REMOVAL	23-95
FLIP-UP GLASS POWER RELEASE SYSTEM - DESCRIPTION, LIFTGATE	8N-4
FLIP-UP GLASS POWER RELEASE SYSTEM - DIAGNOSIS AND TESTING, LIFTGATE	8N-6
FLIP-UP GLASS POWER RELEASE SYSTEM - OPERATION, LIFTGATE	8N-5
FLIP-UP GLASS SWITCH - INSTALLATION	23-95
FLIP-UP GLASS SWITCH - REMOVAL	23-95
FLIP-UP GLASS WEATHERSTRIP - INSTALLATION	23-188
FLIP-UP GLASS WEATHERSTRIP - REMOVAL	23-188
FLOOR CONSOLE - INSTALLATION	23-165
FLOOR CONSOLE - REMOVAL	23-164
FLOOR DISTRIBUTION DUCTS - INSTALLATION	24-39
FLOOR DISTRIBUTION DUCTS - REMOVAL	24-39
FLOOR HEAT DUCT - INSTALLATION, REAR	24-41
FLOOR HEAT DUCT - REMOVAL, REAR	24-40
FLOOR TUNNEL BRACKET - INSTALLATION, INSTRUMENT PANEL CENTER	23-148
FLOOR TUNNEL BRACKET - REMOVAL, INSTRUMENT PANEL CENTER	23-147

Description	Group-Page
FLOW - DIAGNOSIS AND TESTING, TRANS OIL COOLER	7-55
FLOW AND PRESSURE - DIAGNOSIS AND TESTING, STEERING	19-4
FLUID - DESCRIPTION, AUTOMATIC TRANSMISSION	0-4
FLUID - DIAGNOSIS AND TESTING, CAUSES OF BURNT	21-136,21-292
FLUID - OPERATION, AUTOMATIC TRANSMISSION	0-4
FLUID AND FILTER REPLACEMENT - STANDARD PROCEDURE	21-137
FLUID AND FILTER REPLACEMENT - STANDARD PROCEDURES	21-295
FLUID CAPACITIES - SPECIFICATIONS	0-6
FLUID CONTAMINATION - DIAGNOSIS AND TESTING	21-136,21-293
FLUID CONTAMINATION - DIAGNOSIS AND TESTING, BRAKE	5-20
FLUID COOLER - INSTALLATION	19-40
FLUID COOLER - REMOVAL	19-40
FLUID FILL/CHECK LOCATIONS - INSPECTION	0-6
FLUID FILTER - DESCRIPTION, POWER STEERING/RADIATOR COOLING FAN	19-35
FLUID FILTER - OPERATION, POWER STEERING/RADIATOR COOLING FAN	19-36
FLUID LEAK - DIAGNOSIS AND TESTING, CONVERTER HOUSING	21-246,21-78
FLUID LEVEL - DIAGNOSIS AND TESTING, EFFECTS OF INCORRECT	21-136, 21-292
FLUID LEVEL CHECK - STANDARD PROCEDURE	21-136
FLUID LEVEL CHECK - STANDARD PROCEDURES	21-294
FLUID LEVEL SWITCH - DESCRIPTION, WASHER	8R-21
FLUID LEVEL SWITCH - INSTALLATION, BRAKE	5-7
FLUID LEVEL SWITCH - INSTALLATION, WASHER	8R-22
FLUID LEVEL SWITCH - OPERATION, WASHER	8R-21
FLUID LEVEL SWITCH - REMOVAL, BRAKE	5-6
FLUID LEVEL SWITCH - REMOVAL, WASHER	8R-21
FLUID LEVELS - INSPECTION	30-4
FLUID RESERVOIR - INSTALLATION	5-21
FLUID RESERVOIR - REMOVAL	5-21
FLUID, SPECIFICATIONS - BRAKE	5-20
FLUID TYPES - DESCRIPTION	0-2,0-3
FLUID TYPES - ENGINE OIL	0-2
FLUSH MEASUREMENTS, SPECIFICATIONS - BODY GAP	23-87
FLUSH USING TOOL 6906-B - STANDARD PROCEDURE, COOLER	7-56
FOG LAMP - INSTALLATION	8L-11
FOG LAMP - REMOVAL	8L-11
FOG LAMP ADJUSTMENT, FOG LAMP UNIT	8L-11
FOG LAMP UNIT - FOG LAMP ADJUSTMENT	8L-11
FOG LAMP UNIT - INSTALLATION	8L-11
FOG LAMP UNIT - REMOVAL	8L-11
FOG LAMPS INDICATOR - DESCRIPTION, FRONT	8J-18
FOG LAMPS INDICATOR - DESCRIPTION, REAR	8J-25
FOG LAMPS INDICATOR - OPERATION, FRONT	8J-19
FOG LAMPS INDICATOR - OPERATION, REAR	8J-25
FOLDING MECHANISM - INSTALLATION, REAR HEADREST	23-178
FOLDING MECHANISM - REMOVAL, REAR HEADREST	23-178
FOLDING REAR SEAT BACK LATCH / LOCK - INSTALLATION	23-180
FOLDING REAR SEAT BACK LATCH / LOCK - REMOVAL	23-180
FOLDING REAR SEAT BACK LATCH HANDLE - INSTALLATION	23-180
FOLDING REAR SEAT BACK LATCH HANDLE - REMOVAL	23-180
FOLDING REAR SEAT BACK LATCH/ HINGE - INSTALLATION	23-181
FOLDING REAR SEAT BACK LATCH/ HINGE - REMOVAL	23-181
FORM, FINAL STEPS - NEW VEHICLE PREPARATION	30-17
FORM-IN-PLACE GASKETS & SEALERS - STANDARD PROCEDURE	9-70,9-9
FRAME - DESCRIPTION	13-4
FRAME DIMENSIONS, SPECIFICATIONS	13-4
FRONT - INSTALLATION, CRANKSHAFT OIL SEAL	9-115,9-41
FRONT - INSTALLATION, PROPELLER SHAFT	3-7
FRONT - REMOVAL, CRANKSHAFT OIL SEAL	9-115,9-41
FRONT - REMOVAL, PROPELLER SHAFT	3-7
FRONT 4.7L - INSTALLATION, PROPELLER SHAFT	3-8
FRONT 4.7L - REMOVAL, PROPELLER SHAFT	3-7
FRONT ABSORBER - INSTALLATION	13-1
FRONT ABSORBER - REMOVAL	13-1
FRONT AXLE - 186FBI - ADJUSTMENTS	3-22
FRONT AXLE - 186FBI - DESCRIPTION	3-16
FRONT AXLE - 186FBI - INSTALLATION	3-21
FRONT AXLE - 186FBI - OPERATION	3-16
FRONT AXLE - 186FBI - REMOVAL	3-21
FRONT AXLE, 186FBI	3-30
FRONT BEARING - INSTALLATION, OUTPUT SHAFT	21-152
FRONT BEARING - REMOVAL, OUTPUT SHAFT	21-151
FRONT CARPET - INSTALLATION	23-161
FRONT CARPET - REMOVAL	23-159
FRONT CHECK VALVE - DESCRIPTION	8R-8
FRONT CHECK VALVE - INSTALLATION	8R-9
FRONT CHECK VALVE - OPERATION	8R-8
FRONT CHECK VALVE - REMOVAL	8R-9
FRONT CLUTCH - ASSEMBLY	21-142
FRONT CLUTCH - DESCRIPTION	21-139
FRONT CLUTCH - DISASSEMBLY	21-141
FRONT CLUTCH - INSPECTION	21-141
FRONT CLUTCH - OPERATION	21-139
FRONT DISC BRAKE CALIPER - ASSEMBLY	5-18
FRONT DISC BRAKE CALIPER - DISASSEMBLY	5-14
FRONT DISC BRAKE CALIPER - INSTALLATION	5-19
FRONT DISC BRAKE CALIPER - REMOVAL	5-13
FRONT DISC BRAKE ROTOR - DIAGNOSIS AND TETSING	5-26
FRONT DISC BRAKE ROTOR - INSTALLATION	5-28
FRONT DISC BRAKE ROTOR - REMOVAL	5-27
FRONT DISC BRAKE SHOES - DESCRIPTION	5-8
FRONT DISC BRAKE SHOES - INSTALLATION	5-12
FRONT DISC BRAKE SHOES - OPERATION	5-9
FRONT DISC BRAKE SHOES - REMOVAL	5-10
FRONT DOOR - INSTALLATION	23-114
FRONT DOOR - REMOVAL	23-113
FRONT DOOR GLASS RUN WEATHERSTRIP - INSTALLATION	23-187
FRONT DOOR GLASS RUN WEATHERSTRIP - REMOVAL	23-187
FRONT DOOR INNER BELT WEATHERSTRIP - INSTALLATION	23-187
FRONT DOOR INNER BELT WEATHERSTRIP - REMOVAL	23-187
FRONT DOOR OUTER BELT WEATHERSTRIP - INSTALLATION	23-188
FRONT DOOR OUTER BELT WEATHERSTRIP - REMOVAL	23-188
FRONT DOOR SECOND WEATHERSTRIP - INSTALLATION	23-188
FRONT DOOR SECOND WEATHERSTRIP - REMOVAL	23-188
FRONT DOOR SPEAKER - INSTALLATION	8A-23
FRONT DOOR SPEAKER, SPEAKER	8A-22
FRONT DOOR WEATHERSTRIP - INSTALLATION	23-189
FRONT DOOR WEATHERSTRIP - REMOVAL	23-188
FRONT FASCIA - INSTALLATION	13-1
FRONT FASCIA - REMOVAL	13-1
FRONT FENDER - INSTALLATION	23-116
FRONT FENDER - REMOVAL	23-116
FRONT FOG LAMPS INDICATOR - DESCRIPTION	8J-18
FRONT FOG LAMPS INDICATOR - OPERATION	8J-19
FRONT HEADREST - INSTALLATION	23-173
FRONT HEADREST - REMOVAL	23-172
FRONT HEADREST SLEEVE - INSTALLATION	23-173
FRONT HEADREST SLEEVE - REMOVAL	23-173
FRONT MOUNT - INSTALLATION	9-124
FRONT MOUNT - REMOVAL	9-124
FRONT OUTPUT SHAFT SEAL - INSTALLATION	21-35,21-61
FRONT OUTPUT SHAFT SEAL - REMOVAL	21-35,21-61
FRONT PARKING BRAKE CABLE - INSTALLATION	5-31
FRONT PARKING BRAKE CABLE - REMOVAL	5-29
FRONT POWER OUTLET - DESCRIPTION	8W-12
FRONT POWER OUTLET - DIAGNOSIS & TESTING	8W-13
FRONT POWER OUTLET - INSTALLATION	8W-15
FRONT POWER OUTLET - OPERATION	8W-13
FRONT POWER OUTLET - REMOVAL	8W-14
FRONT SEAL - INSTALLATION, OIL PUMP	21-318
FRONT SEAL - REMOVAL, OIL PUMP	21-318
FRONT SEAT - INSTALLATION	23-174
FRONT SEAT - REMOVAL	23-174
FRONT SEAT BACK - INSTALLATION	23-174
FRONT SEAT BACK - REMOVAL	23-174
FRONT SEAT BACK COVER - INSTALLATION	23-175
FRONT SEAT BACK COVER - REMOVAL	23-175
FRONT SEAT BELT & RETRACTOR - INSTALLATION	8O-19
FRONT SEAT BELT & RETRACTOR - REMOVAL	8O-18
FRONT SEAT BELT BUCKLE - INSTALLATION	8O-20
FRONT SEAT BELT BUCKLE - REMOVAL	8O-19
FRONT SEAT CUSHION - INSTALLATION	23-175
FRONT SEAT CUSHION - REMOVAL	23-175
FRONT SEAT SIDE SHIELD - INSTALLATION	23-176
FRONT SEAT SIDE SHIELD - REMOVAL	23-176
FRONT SERVO - ASSEMBLY	21-144
FRONT SERVO - CLEANING	21-144
FRONT SERVO - DESCRIPTION	21-143
FRONT SERVO - DISASSEMBLY	21-144
FRONT SERVO - INSPECTION	21-144
FRONT SERVO - OPERATION	21-143
FRONT SKID PLATE - INSTALLATION	13-7
FRONT SKID PLATE - REMOVAL	13-7
FRONT SUSPENSION - DESCRIPTION	2-5
FRONT SUSPENSION, SPECIAL TOOLS	2-7
FRONT TOW HOOK - INSTALLATION	13-7
FRONT TOW HOOK - REMOVAL	13-7
FRONT TUBE AXLE - INSTALLATION	3-15
FRONT TUBE AXLE - REMOVAL	3-15
FRONT WASHER HOSES/TUBES - DESCRIPTION	8R-9
FRONT WASHER HOSES/TUBES - OPERATION	8R-10
FRONT WASHER NOZZLE - DESCRIPTION	8R-10
FRONT WASHER NOZZLE - INSTALLATION	8R-11
FRONT WASHER NOZZLE - OPERATION	8R-10
FRONT WASHER NOZZLE - REMOVAL	8R-10
FRONT WASHER PUMP/MOTOR - DESCRIPTION	8R-11
FRONT WASHER PUMP/MOTOR - INSTALLATION	8R-12
FRONT WASHER PUMP/MOTOR - OPERATION	8R-11
FRONT WASHER PUMP/MOTOR - REMOVAL	8R-12
FRONT WHEEL SPEED SENSOR - DESCRIPTION	5-38
FRONT WHEEL SPEED SENSOR - INSTALLATION	5-38
FRONT WHEEL SPEED SENSOR - OPERATION	5-38

Description	Group-Page
FRONT WHEEL SPEED SENSOR - REMOVAL	5-38
FRONT WIPER & WASHER SYSTEM - CLEANING	8R-7
FRONT WIPER & WASHER SYSTEM - DIAGNOSIS AND TESTING	8R-4
FRONT WIPER & WASHER SYSTEM - INSPECTION	8R-7
FRONT WIPER ARM - DESCRIPTION	8R-12
FRONT WIPER ARM - INSTALLATION	8R-13
FRONT WIPER ARM - OPERATION	8R-13
FRONT WIPER ARM - REMOVAL	8R-13
FRONT WIPER BLADE - DESCRIPTION	8R-14
FRONT WIPER BLADE - INSTALLATION	8R-14
FRONT WIPER BLADE - OPERATION	8R-14
FRONT WIPER BLADE - REMOVAL	8R-14
FRONT WIPER MODULE - DESCRIPTION	8R-15
FRONT WIPER MODULE - INSTALLATION	8R-16
FRONT WIPER MODULE - OPERATION	8R-15
FRONT WIPER MODULE - REMOVAL	8R-16
FRONT WIPERS/WASHERS - DESCRIPTION	8R-2
FRONT WIPERS/WASHERS - OPERATION	8R-3
FUEL - INSPECTION	30-12
FUEL DELIVERY - DESCRIPTION	14-1
FUEL DELIVERY - OPERATION	14-2
FUEL DELIVERY - TORQUE	14-4
FUEL FILL DOOR - INSTALLATION	23-117
FUEL FILL DOOR - REMOVAL	23-117
FUEL FILLER CAP - DESCRIPTION	25-28
FUEL FILLER CAP - OPERATION	25-28
FUEL FILLER CAP - REMOVAL	25-28
FUEL FILTER/PRESSURE REGULATOR - DESCRIPTION	14-5
FUEL FILTER/PRESSURE REGULATOR - INSTALLATION	14-6
FUEL FILTER/PRESSURE REGULATOR - OPERATION	14-6
FUEL FILTER/PRESSURE REGULATOR - REMOVAL	14-6
FUEL GAUGE - DESCRIPTION	8J-19
FUEL GAUGE - OPERATION	8J-19
FUEL GAUGE SENDING UNIT - DIAGNOSIS AND TESTING	14-7
FUEL INDICATOR - DESCRIPTION, LOW	8J-21
FUEL INDICATOR - OPERATION, LOW	8J-21
FUEL INJECTION - TORQUE	14-34
FUEL INJECTOR - DESCRIPTION	14-38
FUEL INJECTOR - INSTALLATION	14-39
FUEL INJECTOR - OPERATION	14-38
FUEL INJECTOR - REMOVAL	14-39
FUEL INJECTOR TEST - DIAGNOSIS AND TESTING	14-39
FUEL LEVEL SENDING UNIT / SENSOR - DESCRIPTION	14-7
FUEL LEVEL SENDING UNIT / SENSOR - INSTALLATION	14-8
FUEL LEVEL SENDING UNIT / SENSOR - OPERATION	14-7
FUEL LEVEL SENDING UNIT / SENSOR - REMOVAL	14-8
FUEL LINES - DESCRIPTION	14-8
FUEL PRESSURE LEAK DOWN TEST - DIAGNOSIS AND TESTING	14-2
FUEL PUMP - DESCRIPTION	14-9
FUEL PUMP - OPERATION	14-9
FUEL PUMP AMPERAGE TEST - DIAGNOSIS AND TESTING	14-9
FUEL PUMP CAPACITY TEST - DIAGNOSIS AND TESTING	14-9
FUEL PUMP MODULE - DESCRIPTION	14-13
FUEL PUMP MODULE - INSTALLATION	14-13
FUEL PUMP MODULE - OPERATION	14-13
FUEL PUMP MODULE - REMOVAL	14-13
FUEL PUMP PRESSURE TEST - DIAGNOSIS AND TESTING	14-11
FUEL PUMP RELAY - DESCRIPTION	14-39
FUEL PUMP RELAY - OPERATION	14-40
FUEL REQUIREMENTS, SPECIFICATIONS	0-4
FUEL SYSTEM PRESSURE RELEASE - STANDARD PROCEDURE	14-3
FUEL SYSTEM PRESSURE, SPECIFICATIONS	14-4
FUEL SYSTEM, SPECIAL TOOLS	14-5
FUEL TANK - DESCRIPTION	14-18
FUEL TANK - INSTALLATION	14-20
FUEL TANK - OPERATION	14-19
FUEL TANK - REMOVAL	14-19
FUEL TANK SKID PLATE - DESCRIPTION	13-7
FUSE - DESCRIPTION, IGNITION-OFF DRAW	8W-3
FUSE - INSTALLATION, IGNITION-OFF DRAW	8W-4
FUSE - OPERATION, IGNITION-OFF DRAW	8W-3
FUSE - REMOVAL, IGNITION-OFF DRAW	8W-4
FUSE COVER - INSTALLATION	8W-19
FUSE COVER - REMOVAL	8W-18
FUSES POWERING SEVERAL LOADS - STANDARD PROCEDURE, TESTING FOR SHORT TO GROUND ON	8W-7
GALLERY PLUGS - STANDARD PROCEDURE, ENGINE CORE AND OIL	9-11,9-72
GAP AND FLUSH MEASUREMENTS, SPECIFICATIONS - BODY	23-87
GARAGE DOOR OPENER - DIAGNOSIS & TESTING, UNIVERSAL	8M-10
GAS POWERED - GENERATOR RATINGS	8F-29
GAS POWERED - STARTER MOTOR	8F-39
GAS POWERED - TORQUE	8F-29
GAS PROP - INSTALLATION	23-121
GAS PROP - REMOVAL	23-121
GASKET - DIAGNOSIS AND TESTING, CYLINDER HEAD	9-83,9-96
GASKET SURFACE PREPARATION - STANDARD PROCEDURES, ENGINE	9-71
GASKETS & SEALERS - STANDARD PROCEDURE, FORM-IN-PLACE	9-70,9-9
GAUGE - DESCRIPTION, ENGINE TEMPERATURE	8J-17
GAUGE - DESCRIPTION, FUEL	8J-19
GAUGE - DESCRIPTION, OIL PRESSURE	8J-24
GAUGE - DESCRIPTION, VOLTAGE	8J-31
GAUGE - OPERATION, ENGINE TEMPERATURE	8J-18
GAUGE - OPERATION, FUEL	8J-19
GAUGE - OPERATION, OIL PRESSURE	8J-24
GAUGE - OPERATION, VOLTAGE	8J-31
GAUGE SENDING UNIT - DIAGNOSIS AND TESTING, FUEL	14-7
GAUGES - DIAGNOSIS AND TESTING, PRESSURE	22-7
GAUGES INDICATOR - DESCRIPTION, CHECK	8J-16
GAUGES INDICATOR - OPERATION, CHECK	8J-16
GAUGES/WARNING LIGHTS - INSPECTION	30-14
GEAR - ADJUSTMENTS, STEERING	19-17
GEAR - DESCRIPTION	19-15
GEAR - INSTALLATION	19-15
GEAR - INSTALLATION, PINION GEAR/RING	3-122,3-45,3-84
GEAR - OPERATION	19-15
GEAR - REMOVAL	19-15
GEAR - REMOVAL, PINION GEAR/RING	3-119, 3-44,3-81
GEAR HOUSING PLUG - INSTALLATION, STEERING	19-27
GEAR HOUSING PLUG - REMOVAL, STEERING	19-27
GEAR, SPECIAL TOOLS - POWER STEERING	19-18
GEAR, SPECIFICATIONS - POWER STEERING	19-17
GEAR/RING GEAR - INSTALLATION, PINION	3-122,3-45,3-84
GEAR/RING GEAR - REMOVAL, PINION	3-119, 3-44,3-81
GEARSHIFT CABLE - ADJUSTMENTS	21-146, 21-297
GEARSHIFT CABLE - DIAGNOSIS AND TESTING	21-145,21-296
GEARSHIFT CABLE - INSTALLATION	21-146, 21-296
GEARSHIFT CABLE - REMOVAL	21-145,21-296
GEARTRAIN - ASSEMBLY, PLANETARY	21-323
GEARTRAIN - CLEANING, PLANETARY	21-323
GEARTRAIN - DESCRIPTION, PLANETARY	21-322
GEARTRAIN - DISASSEMBLY, PLANETARY	21-323
GEARTRAIN - INSPECTION, PLANETARY	21-323
GEARTRAIN - OPERATION, PLANETARY	21-322
GEARTRAIN/OUTPUT SHAFT - ASSEMBLY, PLANETARY	21-179
GEARTRAIN/OUTPUT SHAFT - DESCRIPTION, PLANETARY	21-177
GEARTRAIN/OUTPUT SHAFT - DISASSEMBLY, PLANETARY	21-178
GEARTRAIN/OUTPUT SHAFT - INSPECTION, PLANETARY	21-178
GEARTRAIN/OUTPUT SHAFT - OPERATION, PLANETARY	21-177
GENERAL - WARNINGS	8W-4
GENERATOR - DESCRIPTION	8F-30
GENERATOR - INSTALLATION	8F-31
GENERATOR - OPERATION	8F-30
GENERATOR - REMOVAL	8F-31
GENERATOR RATINGS, GAS POWERED	8F-29
GLASS - DESCRIPTION, STATIONARY	23-182
GLASS - INSTALLATION, DOOR	23-100,23-108, 23-182
GLASS - INSTALLATION, FLIP-UP	23-94
GLASS - INSTALLATION, SIDE VIEW MIRROR	23-120
GLASS - OPERATION, STATIONARY	23-182
GLASS - REMOVAL, DOOR	23-100,23-108, 23-182
GLASS - REMOVAL, FLIP-UP	23-93
GLASS - REMOVAL, SIDE VIEW MIRROR	23-119
GLASS AJAR SWITCH - DESCRIPTION, FLIP UP	8L-32
GLASS AJAR SWITCH - OPERATION, FLIP UP	8L-33
GLASS HEATING GRID REPAIR - STANDARD PROCEDURE, REAR	8G-15
GLASS LATCH - INSTALLATION, FLIP-UP	23-94
GLASS LATCH - REMOVAL, FLIP-UP	23-94
GLASS LATCH STRIKER - INSTALLATION, FLIP-UP	23-95
GLASS LATCH STRIKER - REMOVAL, FLIP-UP	23-95
GLASS POWER RELEASE SYSTEM - DESCRIPTION, LIFTGATE FLIP-UP	8N-4
GLASS POWER RELEASE SYSTEM - DIAGNOSIS AND TESTING, LIFTGATE FLIP-UP	8N-6
GLASS POWER RELEASE SYSTEM - OPERATION, LIFTGATE FLIP-UP	8N-5
GLASS RUN CHANNEL - INSTALLATION	23-101
GLASS RUN CHANNEL - REMOVAL	23-101
GLASS RUN WEATHERSTRIP - INSTALLATION, FRONT DOOR	23-187
GLASS RUN WEATHERSTRIP - REMOVAL, FRONT DOOR	23-187
GLASS SWITCH - INSTALLATION, FLIP-UP	23-95
GLASS SWITCH - REMOVAL, FLIP-UP	23-95
GLASS WEATHERSTRIP - INSTALLATION, FLIP-UP	23-188
GLASS WEATHERSTRIP - REMOVAL, FLIP-UP	23-188
GLOVE BOX - INSTALLATION	23-137
GLOVE BOX - REMOVAL	23-136
GLOVE BOX LAMP/SWITCH - INSTALLATION	8L-35
GLOVE BOX LAMP/SWITCH - REMOVAL	8L-34
GLOVE BOX LATCH - INSTALLATION	23-137
GLOVE BOX LATCH - REMOVAL	23-137
GLOVE BOX LATCH STRIKER - INSTALLATION	23-139
GLOVE BOX LATCH STRIKER - REMOVAL	23-138
GLOVE BOX ROLL DOWN - STANDARD PROCEDURE	23-136
GOVERNOR - DESCRIPTION, ELECTRONIC	21-130
GOVERNOR - INSTALLATION, ELECTRONIC	21-134
GOVERNOR - OPERATION, ELECTRONIC	21-132
GOVERNOR - REMOVAL, ELECTRONIC	21-133
GRID - DESCRIPTION, REAR WINDOW DEFOGGER	8G-15
GRID - DIAGNOSIS AND TESTING, REAR WINDOW DEFOGGER	8G-15
GRID - OPERATION, REAR WINDOW DEFOGGER	8G-15
GRID REPAIR - STANDARD PROCEDURE, REAR GLASS HEATING	8G-15
GRILLE - INSTALLATION	23-118
GRILLE - INSTALLATION, COWL	23-114
GRILLE - REMOVAL	23-118
GRILLE - REMOVAL, COWL	23-114

Description	Group-Page
GROUND - STANDARD PROCEDURE, TESTING FOR A SHORT TO	8W-6
GROUND ON FUSES POWERING SEVERAL LOADS - STANDARD PROCEDURE, TESTING FOR SHORT TO	8W-7
GROUND STRAP - DESCRIPTION, RADIO NOISE SUPPRESSION	8A-16
GROUND STRAP - INSTALLATION, ENGINE TO BODY	8A-17
GROUND STRAP - INSTALLATION, EXHAUST-TO-BODY	8A-17
GROUND STRAP - REMOVAL, ENGINE-TO-BODY	8A-16
GROUND STRAP - REMOVAL, EXHAUST-TO-BODY	8A-16
GROUNDS - DESCRIPTION, POWER	8E-18
G-SWITCH - DESCRIPTION	5-39
G-SWITCH - INSTALLATION	5-39
G-SWITCH - OPERATION	5-39
G-SWITCH - REMOVAL	5-39
GUARD - DESCRIPTION, THERMAL	8F-26
GUARD - INSTALLATION, THERMAL	8F-27
GUARD - OPERATION, THERMAL	8F-26
GUARD - REMOVAL, THERMAL	8F-26
GUIDES - DESCRIPTION, VALVE	9-82,9-96
HANDLE - INSTALLATION, ASSIST	23-159
HANDLE - INSTALLATION, EXTERIOR	23-101, 23-109,23-93
HANDLE - INSTALLATION, FOLDING REAR SEAT BACK LATCH	23-180
HANDLE - REMOVAL, ASSIST	23-159
HANDLE - REMOVAL, EXTERIOR	23-101,23-108, 23-93
HANDLE - REMOVAL, FOLDING REAR SEAT BACK LATCH	23-180
HANDLE ACTUATOR - INSTALLATION, INSIDE	23-103,23-109
HANDLE ACTUATOR - REMOVAL, INSIDE	23-103,23-109
HANDLING - INSPECTION, STEERING	30-12
HANDLING OF NON-DEPLOYED AIRBAGS - STANDARD PROCEDURE	8O-4
HARNESS - DIAGNOSIS AND TESTING, WIRING	8W-4
HARNESS CONNECTOR - DESCRIPTION, IGNITION-OFF DRAW WIRE	8W-17
HARNESS CONNECTOR - OPERATION, IGNITION-OFF DRAW WIRE	8W-18
HAZARD WARNING SYSTEM - DESCRIPTION, TURN SIGNAL	8L-2
HAZARD WARNING SYSTEM - DIAGNOSIS AND TESTING, TURN SIGNAL	8L-3
HAZARD WARNING SYSTEM - OPERATION, TURN SIGNAL	8L-3
HCU (HYDRAULIC CONTROL UNIT) - DESCRIPTION	5-41
HCU (HYDRAULIC CONTROL UNIT) - INSTALLATION	5-42
HCU (HYDRAULIC CONTROL UNIT) - OPERATION	5-41
HCU (HYDRAULIC CONTROL UNIT) - REMOVAL	5-42
HEAD - CLEANING, CYLINDER	9-20
HEAD - DESCRIPTION, CYLINDER	9-19,9-82, 9-96
HEAD - INSPECTION, CYLINDER	9-21
HEAD - INSTALLATION, CYLINDER	9-21
HEAD - LEFT - CLEANING, CYLINDER	9-85
HEAD - LEFT - INSPECTION, CYLINDER	9-85
HEAD - LEFT - INSTALLATION, CYLINDER	9-85
HEAD - LEFT - REMOVAL, CYLINDER	9-83
HEAD - REMOVAL, CYLINDER	9-20
HEAD - RIGHT - CLEANING, CYLINDER	9-98
HEAD - RIGHT - INSPECTION, CYLINDER	9-98
HEAD - RIGHT - INSTALLATION, CYLINDER	9-98
HEAD - RIGHT - REMOVAL, CYLINDER	9-97
HEAD COVER(S) - CLEANING, CYLINDER	9-23
HEAD COVER(S) - DESCRIPTION, CYLINDER	9-22
HEAD COVER(S) - INSPECTION, CYLINDER	9-23
HEAD COVER(S) - INSTALLATION, CYLINDER	9-23
HEAD COVER(S) - LEFT - CLEANING, CYLINDER	9-92
HEAD COVER(S) - LEFT - DESCRIPTION, CYLINDER	9-92
HEAD COVER(S) - REMOVAL, CYLINDER	9-22
HEAD COVER(S) - RIGHT - CLEANING, CYLINDER	9-103
HEAD COVER(S) - RIGHT - DESCRIPTION, CYLINDER	9-103
HEAD GASKET - DIAGNOSIS AND TESTING, CYLINDER	9-83,9-96
HEAD RESTRAINTS - INSPECTION, SEAT BELTS, SHOULDER BELTS, RETRACTORS	30-10
HEADLAMP - DESCRIPTION	8L-12
HEADLAMP - DIAGNOSIS AND TESTING	8L-13
HEADLAMP - DIAGNOSIS AND TESTING PROCEDURES	8L-16
HEADLAMP - OPERATION	8L-12
HEADLAMP MOUNTING MODULE - INSTALLATION	23-118
HEADLAMP MOUNTING MODULE - REMOVAL	23-118
HEADLAMP SENSOR - INSTALLATION, AUTO	8L-5
HEADLAMP SENSOR - REMOVAL, AUTO	8L-5
HEADLAMP SENSOR (AHL) - DIAGNOSIS AND TESTING, AUTO	8L-5
HEADLAMP SWITCH - DESCRIPTION	8L-16
HEADLAMP SWITCH - DIAGNOSIS AND TESTING	8L-17
HEADLAMP SWITCH - OPERATION	8L-17
HEADLAMP UNIT - ADJUSTMENTS	8L-18
HEADLAMP UNIT - INSTALLATION	8L-17
HEADLAMP UNIT - REMOVAL	8L-17
HEADLINER - INSTALLATION	23-166
HEADLINER - REMOVAL	23-165
HEADREST - INSTALLATION, FRONT	23-173
HEADREST - INSTALLATION, REAR	23-177
HEADREST - REMOVAL, FRONT	23-172
HEADREST - REMOVAL, REAR	23-177
HEADREST FOLDING MECHANISM - INSTALLATION, REAR	23-178
HEADREST FOLDING MECHANISM - REMOVAL, REAR	23-178
HEADREST RELEASE KNOB - INSTALLATION, REAR	23-177
HEADREST RELEASE KNOB - REMOVAL, REAR	23-177
HEADREST SLEEVE - INSTALLATION, FRONT	23-173
HEADREST SLEEVE - INSTALLATION, REAR	23-178
HEADREST SLEEVE - REMOVAL, FRONT	23-173
HEADREST SLEEVE - REMOVAL, REAR	23-178
HEAT DUCT - INSTALLATION, REAR FLOOR	24-41
HEAT DUCT - REMOVAL, REAR FLOOR	24-40
HEAT SHIELDS - DESCRIPTION	11-11
HEAT/DEFROST - PANEL/DEFROST DOOR ELECTRIC ACTUATOR - INSTALLATION	24-32
HEAT/DEFROST - PANEL/DEFROST DOOR ELECTRIC ACTUATOR - REMOVAL	24-31
HEAT/DEFROST DOOR - INSTALLATION	24-49
HEAT/DEFROST DOOR - REMOVAL	24-47
HEAT/DEFROST DOOR VACUUM ACTUATOR - INSTALLATION	24-33
HEAT/DEFROST DOOR VACUUM ACTUATOR - REMOVAL	24-32
HEATED MIRRORS - DESCRIPTION	8G-1
HEATED MIRRORS - DIAGNOSIS AND TESTING	8G-1
HEATED MIRRORS - OPERATION	8G-1
HEATED SEAT ELEMENT - DESCRIPTION	8G-7
HEATED SEAT ELEMENT - DIAGNOSIS & TESTING	8G-7
HEATED SEAT ELEMENT - OPERATION	8G-7
HEATED SEAT MODULE - DIAGNOSIS & TESTING	8E-14
HEATED SEAT SENSOR - DIAGNOSIS & TESTING	8G-9
HEATED SEAT SWITCH - DESCRIPTION, DRIVER	8G-5
HEATED SEAT SWITCH - DESCRIPTION, PASSENGER	8G-10
HEATED SEAT SWITCH - DIAGNOSIS & TESTING	8G-10,8G-5
HEATED SEAT SWITCH - INSTALLATION, DRIVER	8G-7
HEATED SEAT SWITCH - INSTALLATION, PASSENGER	8G-12
HEATED SEAT SWITCH - OPERATION, DRIVER	8G-5
HEATED SEAT SWITCH - OPERATION, PASSENGER	8G-10
HEATED SEAT SWITCH - REMOVAL, DRIVER	8G-6
HEATED SEAT SWITCH - REMOVAL, PASSENGER	8G-11
HEATED SEAT SYSTEM - DESCRIPTION	8G-3
HEATED SEAT SYSTEM - DIAGNOSIS & TESTING	8G-4
HEATED SEAT SYSTEM - OPERATION	8G-4
HEATED SEAT/MIRROR MODULE - DESCRIPTION, MEMORY	8E-14
HEATED SEAT/MIRROR MODULE - INSTALLATION, MEMORY	8E-15
HEATED SEAT/MIRROR MODULE - OPERATION, MEMORY	8E-14
HEATED SEAT/MIRROR MODULE - REMOVAL, MEMORY	8E-15
HEATER - DIAGNOSIS AND TESTING, ENGINE BLOCK	7-33
HEATER - OPERATION, ENGINE BLOCK	7-33
HEATER AND AIR CONDITIONER - DESCRIPTION	24-1
HEATER AND AIR CONDITIONER - OPERATION	24-1
HEATER CONTROL - DESCRIPTION, A/C	24-17
HEATER CONTROL - INSTALLATION, A/C	24-25
HEATER CONTROL - OPERATION, A/C	24-17
HEATER CONTROL - REMOVAL, A/C	24-24
HEATER CORE - DESCRIPTION	24-68
HEATER CORE - INSTALLATION	24-69
HEATER CORE - OPERATION	24-68
HEATER CORE - REMOVAL	24-68
HEATER PERFORMANCE - DIAGNOSIS AND TESTING	24-6
HEATER RELAY - DESCRIPTION, O2S	14-44
HEATER RELAY - INSTALLATION, O2S	14-44
HEATER RELAY - OPERATION, O2S	14-44
HEATER RELAY - REMOVAL, O2S	14-44
HEATER/AIR CONDITIONER - INSPECTION	30-13
HEATING GRID REPAIR - STANDARD PROCEDURE, REAR GLASS	8G-15
HEIGHT ADJUSTER KNOB - INSTALLATION, TURNING LOOP	8O-28
HEIGHT ADJUSTER KNOB - REMOVAL, TURNING LOOP	8O-27
HIGH AND LOW LIMITS - OPERATION	25-19
HIGH BEAM INDICATOR - DESCRIPTION	8J-20
HIGH BEAM INDICATOR - OPERATION	8J-20
HIGH PRESSURE RELIEF VALVE - DESCRIPTION	24-57
HIGH PRESSURE RELIEF VALVE - OPERATION	24-57
HIGH PRESSURE SWITCH - DESCRIPTION, A/C	24-25
HIGH PRESSURE SWITCH - DIAGNOSIS AND TESTING, A/C	24-25
HIGH PRESSURE SWITCH - INSTALLATION, A/C	24-25
HIGH PRESSURE SWITCH - OPERATION, A/C	24-25
HIGH PRESSURE SWITCH - REMOVAL, A/C	24-25
HIGH SPEED - DESCRIPTION, TIRE PRESSURE	22-6
HIGH/LOW RELAY - DESCRIPTION, WIPER	8R-24
HIGH/LOW RELAY - DIAGNOSIS AND TESTING, WIPER	8R-25
HIGH/LOW RELAY - INSTALLATION, WIPER	8R-27
HIGH/LOW RELAY - OPERATION, WIPER	8R-25
HIGH/LOW RELAY - REMOVAL, WIPER	8R-26
HINGE - INSTALLATION	23-102,23-109,23-121, 23-95
HINGE - REMOVAL	23-102,23-109,23-121,23-95
HITCH - INSTALLATION, TRAILER	13-8
HITCH - REMOVAL, TRAILER	13-8
HOISTING AND JACKING RECOMMENDATIONS - STANDARD PROCEDURES	0-12
HOLDDOWN - DESCRIPTION, BATTERY	8F-19
HOLDDOWN - INSTALLATION, BATTERY	8F-19

Description	Group-Page
HOLDDOWN - OPERATION, BATTERY	8F-19
HOLDDOWN - REMOVAL, BATTERY	8F-19
HOLDING CLUTCHES - DESCRIPTION	21-298
HOLDING CLUTCHES - OPERATION	21-298
HOLE REPAIR - DESCRIPTION, THREADED	Intro.-4
HONING - STANDARD PROCEDURE, CYLINDER BORE	9-107,9-11
HOOD - HOOD ADJUSTMENT	23-122
HOOD - INSTALLATION	23-122
HOOD - REMOVAL	23-121
HOOD ADJUSTMENT, HOOD	23-122
HOOD AJAR SWITCH - DESCRIPTION	8Q-8
HOOD AJAR SWITCH - DIAGNOSIS AND TESTING	8Q-9
HOOD AJAR SWITCH - INSTALLATION	8Q-10
HOOD AJAR SWITCH - OPERATION	8Q-9
HOOD AJAR SWITCH - REMOVAL	8Q-9
HOOD AJAR SWITCH BRACKET - INSTALLATION	8Q-10
HOOD AJAR SWITCH BRACKET - REMOVAL	8Q-9
HOOD AJAR SWITCH STRIKER - INSTALLATION	8Q-11
HOOD AJAR SWITCH STRIKER - REMOVAL	8Q-10
HOOD LATCH/SAFETY CATCH - INSPECTION	30-3
HOOD SEAL - INSTALLATION	23-189
HOOD SEAL - REMOVAL	23-189
HOOK - INSTALLATION, FRONT TOW	13-7
HOOK - INSTALLATION, REAR TOW	13-7
HOOK - REMOVAL, FRONT TOW	13-7
HOOK - REMOVAL, REAR TOW	13-7
HOOKS - DESCRIPTION, EMERGENCY TOW	0-14
HORN - DESCRIPTION	8H-3
HORN - DIAGNOSIS AND TESTING	8H-3
HORN - INSPECTION	30-14
HORN - INSTALLATION	8H-4
HORN - OPERATION	8H-3
HORN - REMOVAL	8H-4
HORN RELAY - DESCRIPTION	8H-4
HORN RELAY - DIAGNOSIS AND TESTING	8H-5
HORN RELAY - INSTALLATION	8H-6
HORN RELAY - OPERATION	8H-5
HORN RELAY - REMOVAL	8H-6
HORN SWITCH - DESCRIPTION	8H-6
HORN SWITCH - DIAGNOSIS AND TESTING	8H-6
HORN SWITCH - INSTALLATION	8H-8
HORN SWITCH - OPERATION	8H-6
HORN SWITCH - REMOVAL	8H-7
HORN SYSTEM - DESCRIPTION	8H-1
HORN SYSTEM - DIAGNOSIS AND TESTING	8H-2
HORN SYSTEM - OPERATION	8H-2
HOSE CLAMPS - DESCRIPTION	7-3
HOSE CLAMPS - OPERATION	7-4
HOSES - DIAGNOSIS AND TESTING, BRAKE LINE	5-7
HOSES - INSTALLATION	19-41
HOSES - REMOVAL	19-41
HOSES/LINES/TUBES PRECAUTIONS, PLUMBING - REFRIGERANT	24-53
HOSES/TUBES - DESCRIPTION, FRONT WASHER	8R-9
HOSES/TUBES - DESCRIPTION, REAR WASHER	8R-36
HOSES/TUBES - OPERATION, FRONT WASHER	8R-10
HOSES/TUBES - OPERATION, REAR WASHER	8R-36
HOUSING - ASSEMBLY, HVAC	24-44
HOUSING - DISASSEMBLY, HVAC	24-41
HOUSING - INSTALLATION, HVAC	24-45
HOUSING - INSTALLATION, MULTI-FUNCTION SWITCH MOUNTING	8L-27
HOUSING - KEY CYLINDER INSTALLATION, LOCK CYLINDER	19-14
HOUSING - KEY CYLINDER REMOVAL, LOCK CYLINDER	19-13
HOUSING - REMOVAL, HVAC	24-41
HOUSING - REMOVAL, MULTI-FUNCTION SWITCH MOUNTING	8L-25
HOUSING BUSHING - INSTALLATION, EXTENSION	21-135
HOUSING BUSHING - REMOVAL, EXTENSION	21-135
HOUSING FLUID LEAK - DIAGNOSIS AND TESTING, CONVERTER	21-246,21-78
HOUSING PLUG - INSTALLATION, STEERING GEAR	19-27
HOUSING PLUG - REMOVAL, STEERING GEAR	19-27
HOUSING SEAL - INSTALLATION, ADAPTER	21-288
HOUSING SEAL - INSTALLATION, EXTENSION	21-135
HOUSING SEAL - REMOVAL, ADAPTER	21-288
HOUSING SEAL - REMOVAL, EXTENSION	21-135
HOW TO USE WIRING DIAGRAMS - DESCRIPTION	8W-1
HUB / BEARING - DESCRIPTION	2-8
HUB / BEARING - INSTALLATION	2-9
HUB / BEARING - OPERATION	2-8
HUB / BEARING - REMOVAL	2-8
HVAC HOUSING - ASSEMBLY	24-44
HVAC HOUSING - DISASSEMBLY	24-41
HVAC HOUSING - INSTALLATION	24-45
HVAC HOUSING - REMOVAL	24-41
HYDRAULIC LASH ADJUSTER NOISE DIAGNOSIS - DIAGNOSIS AND TESTING	9-83,9-97
HYDRAULIC LIFTERS - CLEANING	9-43
HYDRAULIC LIFTERS - DESCRIPTION	9-43
HYDRAULIC LIFTERS - INSPECTION	9-43
HYDRAULIC LIFTERS - INSTALLATION	9-43
HYDRAULIC LIFTERS - REMOVAL	9-43
HYDRAULIC PRESSURE TEST - DIAGNOSIS AND TESTING	21-245,21-74
HYDRAULIC SCHEMATICS, SCHEMATICS AND DIAGRAMS	21-107,21-262
HYDROMETER TEST - STANDARD PROCEDURE	8F-13
HYDROSTATIC LOCK - STANDARD PROCEDURES	9-10
IDENTIFICATION - DESCRIPTION, FASTENER	Intro.-1
IDENTIFICATION NUMBER - DESCRIPTION, VEHICLE	Intro.-9
IDLE AIR CONTROL MOTOR - DESCRIPTION	14-40
IDLE AIR CONTROL MOTOR - OPERATION	14-40
IGNITION CIRCUIT SENSE - DESCRIPTION	8E-18
IGNITION CIRCUIT SENSE - OPERATION	8E-19
IGNITION COIL - DESCRIPTION	8I-10
IGNITION COIL - INSTALLATION	8I-12
IGNITION COIL - OPERATION	8I-10
IGNITION COIL - REMOVAL	8I-11
IGNITION COIL CAPACITOR - DESCRIPTION	8I-12
IGNITION COIL CAPACITOR - INSTALLATION	8I-13
IGNITION COIL CAPACITOR - OPERATION	8I-12
IGNITION COIL CAPACITOR - REMOVAL	8I-13
IGNITION COIL RESISTANCE, 4.0L ENGINE	8I-2
IGNITION COIL RESISTANCE, 4.7L V-8 ENGINE	8I-2
IGNITION CONTROL - DESCRIPTION	8I-1
IGNITION CONTROL - OPERATION	8I-1
IGNITION SWITCH - DESCRIPTION	19-11
IGNITION SWITCH - DESCRIPTION, KEY-IN	19-12
IGNITION SWITCH - DIAGNOSIS AND TESTING	19-11
IGNITION SWITCH - DIAGNOSIS AND TESTING, KEY-IN	19-12
IGNITION SWITCH - IGNITION SWITCH INSTALLATION	19-11
IGNITION SWITCH - IGNITION SWITCH REMOVAL	19-11
IGNITION SWITCH - OPERATION, KEY-IN	19-12
IGNITION SWITCH INSTALLATION, IGNITION SWITCH	19-11
IGNITION SWITCH REMOVAL, IGNITION SWITCH	19-11
IGNITION SYSTEM - TORQUE	8I-3
IGNITION TIMING, SPECIFICATIONS	8I-2
IGNITION-OFF DRAW FUSE - DESCRIPTION	8W-3
IGNITION-OFF DRAW FUSE - INSTALLATION	8W-4
IGNITION-OFF DRAW FUSE - OPERATION	8W-3
IGNITION-OFF DRAW FUSE - REMOVAL	8W-4
IGNITION-OFF DRAW TEST - STANDARD PROCEDURE	8F-16
IGNITION-OFF DRAW WIRE HARNESS CONNECTOR - DESCRIPTION	8W-17
IGNITION-OFF DRAW WIRE HARNESS CONNECTOR - OPERATION	8W-18
IMMOBILIZER MODULE - DESCRIPTION, SENTRY KEY	8E-21
IMMOBILIZER MODULE - INSTALLATION, SENTRY KEY	8E-23
IMMOBILIZER MODULE - OPERATION, SENTRY KEY	8E-21
IMMOBILIZER MODULE - REMOVAL, SENTRY KEY	8E-22
IMMOBILIZER SYSTEM - DESCRIPTION, SENTRY KEY	8Q-2
IMMOBILIZER SYSTEM - DIAGNOSIS AND TESTING, SENTRY KEY	8Q-5
IMMOBILIZER SYSTEM - OPERATION, SENTRY KEY	8Q-4
IMPORTANCE OF CAREFUL NEW VEHICLE PREPARATION - DESCRIPTION, THE	30-1
IN-CAR TEMPERATURE SENSOR - DESCRIPTION	24-30
IN-CAR TEMPERATURE SENSOR - OPERATION	24-30
IN-CAR TEMPERATURE SENSOR - REMOVAL	24-30
INCORRECT FLUID LEVEL - DIAGNOSIS AND TESTING, EFFECTS OF	21-136,21-292
INDICATOR - DESCRIPTION, ABS	8J-12
INDICATOR - DESCRIPTION, AIRBAG	8J-13
INDICATOR - DESCRIPTION, BRAKE/ PARK BRAKE	8J-14
INDICATOR - DESCRIPTION, CHECK GAUGES	8J-16
INDICATOR - DESCRIPTION, CRUISE	8J-17
INDICATOR - DESCRIPTION, FRONT FOG LAMPS	8J-18
INDICATOR - DESCRIPTION, HIGH BEAM	8J-20
INDICATOR - DESCRIPTION, LOW COOLANT	8J-20
INDICATOR - DESCRIPTION, LOW FUEL	8J-21
INDICATOR - DESCRIPTION, OVERDRIVE OFF	8J-24
INDICATOR - DESCRIPTION, REAR FOG LAMPS	8J-25
INDICATOR - DESCRIPTION, SEATBELT	8J-26
INDICATOR - DESCRIPTION, TRANS OVERTEMP	8J-29
INDICATOR - DESCRIPTION, VTSS	8Q-12
INDICATOR - DESCRIPTION, WAIT-TO-START	8J-32
INDICATOR - DESCRIPTION, WATER-IN-FUEL	8J-33
INDICATOR - DIAGNOSIS AND TESTING, BRAKE	8J-15
INDICATOR - DIAGNOSIS AND TESTING, PART TIME	8J-27
INDICATOR - DIAGNOSIS AND TESTING, VTSS	8Q-13
INDICATOR - OPERATION, ABS	8J-12
INDICATOR - OPERATION, AIRBAG	8J-13
INDICATOR - OPERATION, BRAKE/PARK BRAKE	8J-14
INDICATOR - OPERATION, CHECK GAUGES	8J-16
INDICATOR - OPERATION, CRUISE	8J-17
INDICATOR - OPERATION, FRONT FOG LAMPS	8J-19
INDICATOR - OPERATION, HIGH BEAM	8J-20
INDICATOR - OPERATION, LOW COOLANT	8J-21
INDICATOR - OPERATION, LOW FUEL	8J-21
INDICATOR - OPERATION, OVERDRIVE OFF	8J-25
INDICATOR - OPERATION, REAR FOG LAMPS	8J-25
INDICATOR - OPERATION, SEATBELT	8J-26
INDICATOR - OPERATION, TRANSMISSION OVERTEMP	8J-30
INDICATOR - OPERATION, VTSS	8Q-13

Description	Group-Page
INDICATOR - OPERATION, WAIT-TO-START	8J-32
INDICATOR - OPERATION, WATER-IN-FUEL	8J-33
INDICATOR LAMP - DESCRIPTION, SKIS	8Q-11
INDICATOR LAMP - OPERATION, SKIS	8Q-11
INDICATOR LAMP (MIL) - DESCRIPTION, MALFUNCTION	8J-22
INDICATOR LAMP (MIL) - OPERATION, MALFUNCTION	8J-22
INDICATOR SWITCH - DESCRIPTION, RED BRAKE WARNING	5-7
INDICATOR SWITCH - OPERATION, RED BRAKE WARNING	5-7
INDICATOR TEST - STANDARD PROCEDURE, BUILT-IN	8F-12
INDICATOR (TRANSFER CASE) - DESCRIPTION, SHIFT	8J-27
INDICATOR (TRANSFER CASE) - OPERATION, SHIFT	8J-27
INDICATORS - DESCRIPTION, TURN SIGNAL	8J-30
INDICATORS - DIAGNOSIS AND TESTING, TREAD WEAR	22-7
INDICATORS - DIAGNOSIS AND TESTING, TURN SIGNAL	8J-31
INDICATORS - OPERATION, TURN SIGNAL	8J-30
INFLATION PRESSURES - DESCRIPTION, TIRE	22-6
INFO CENTER - DESCRIPTION, ELECTRONIC VEHICLE	8M-6
INFO CENTER - DIAGNOSIS & TESTING–ELECTRONIC VEHICLE INFORMATION CENTER, ELECTRONIC VEHICLE	8M-8
INFO CENTER - INSTALLATION, ELECTRONIC VEHICLE	8M-9
INFO CENTER - OPERATION, ELECTRONIC VEHICLE	8M-8
INFO CENTER - REMOVAL, ELECTRONIC VEHICLE	8M-9
INITIAL OPERATION - 4.0L - STANDARD PROCEDURES	19-37
INITIAL OPERATION - 4.7L - STANDARD PROCEDURES	19-37
INITIALIZATION - STANDARD PROCEDURES, SKIS	8Q-7
INJECTION - TORQUE, FUEL	14-34
INJECTOR - DESCRIPTION, FUEL	14-38
INJECTOR - INSTALLATION, FUEL	14-39
INJECTOR - OPERATION, FUEL	14-38
INJECTOR - REMOVAL, FUEL	14-39
INJECTOR TEST - DIAGNOSIS AND TESTING, FUEL	14-39
INLET FILTER - INSTALLATION	14-22
INLET FILTER - REMOVAL	14-22
INLET TUBE - INSTALLATION, WATER PUMP	7-54
INLET TUBE - REMOVAL, WATER PUMP	7-54
INNER BELT WEATHERSTRIP - INSTALLATION, FRONT DOOR	23-187
INNER BELT WEATHERSTRIP - INSTALLATION, REAR DOOR	23-190
INNER BELT WEATHERSTRIP - REMOVAL, FRONT DOOR	23-187
INNER BELT WEATHERSTRIP - REMOVAL, REAR DOOR	23-190
INPUT - OPERATION, ASD SENSE - PCM	8I-3
INPUT CLUTCH ASSEMBLY - ASSEMBLY	21-303
INPUT CLUTCH ASSEMBLY - DESCRIPTION	21-300
INPUT CLUTCH ASSEMBLY - DISASSEMBLY	21-302
INPUT CLUTCH ASSEMBLY - OPERATION	21-300
INPUT SPEED SENSOR - DESCRIPTION	21-309
INPUT SPEED SENSOR - INSTALLATION	21-309
INPUT SPEED SENSOR - OPERATION	21-309
INPUT SPEED SENSOR - REMOVAL	21-309
INSIDE HANDLE ACTUATOR - INSTALLATION	23-103,23-109
INSIDE HANDLE ACTUATOR - REMOVAL	23-103, 23-109
INSPECTION - DESCRIPTION, ROAD TEST	30-11
INSPECTION - DIAGNOSIS AND TESTING, ENGINE OIL LEAK	9-128
INSPECTION - DIAGNOSIS AND TESTING, VISUAL	14-27
INSPECTION - DIAGNOSIS AND TESTING, WHEEL	22-9
INSPECTION, A/C COMPRESSOR CLUTCH	24-14
INSPECTION, ACCUMULATOR	21-125
INSPECTION, AUTOMATIC TRANSMISSION - 42RE	21-98
INSPECTION, AUTOMATIC TRANSMISSION - 545RFE	21-254
INSPECTION, BATTERY	30-6
INSPECTION, BATTERY SYSTEM	8F-5
INSPECTION, BODY SEALING	30-8
INSPECTION, CAMSHAFT	9-32
INSPECTION, CAMSHAFT BEARINGS	9-31
INSPECTION, CATALYTIC CONVERTER - 4.0L	11-5
INSPECTION, CATALYTIC CONVERTER - 4.7L	11-7
INSPECTION, COMPASS	30-9
INSPECTION, CRANKSHAFT	9-111
INSPECTION, CRANKSHAFT MAIN BEARINGS	9-114,9-39
INSPECTION, CYLINDER HEAD	9-21
INSPECTION, CYLINDER HEAD - LEFT	9-85
INSPECTION, CYLINDER HEAD - RIGHT	9-98
INSPECTION, CYLINDER HEAD COVER(S)	9-23
INSPECTION, DISC BRAKE CALIPER	5-17
INSPECTION, DOORS AND DOOR LOCKS	30-8
INSPECTION, ENGINE BLOCK	9-108,9-30
INSPECTION, ENGINE PERFORMANCE	30-12
INSPECTION, EXHAUST MANIFOLD - LEFT	9-138
INSPECTION, EXHAUST MANIFOLD - RIGHT	9-139
INSPECTION, EXHAUST PIPE - 4.0L	11-8
INSPECTION, EXHAUST PIPE - 4.7L	11-10
INSPECTION, FIT AND FINISH	30-8,30-9
INSPECTION, FLUID FILL/CHECK LOCATIONS	0-6
INSPECTION, FLUID LEVELS	30-4
INSPECTION, FRONT CLUTCH	21-141
INSPECTION, FRONT SERVO	21-144
INSPECTION, FRONT WIPER & WASHER SYSTEM	8R-7
INSPECTION, FUEL	30-12
INSPECTION, GAUGES/WARNING LIGHTS	30-14
INSPECTION, HEATER/AIR CONDITIONER	30-13
INSPECTION, HOOD LATCH/SAFETY CATCH	30-3
INSPECTION, HORN	30-14
INSPECTION, HYDRAULIC LIFTERS	9-43
INSPECTION, INFORMATION LABELS	30-17
INSPECTION, INTAKE MANIFOLD	9-137
INSPECTION, KEYLESS ENTRY	30-8
INSPECTION, LIGHTS AND SWITCHES	30-9
INSPECTION, LINES/HOSES	30-6
INSPECTION, LOW/REVERSE CLUTCH	21-312
INSPECTION, MAINTENANCE SCHEDULES - UNSCHEDULED	0-7
INSPECTION, MIRRORS	30-14
INSPECTION, NEUTRAL SAFETY SWITCH	30-14
INSPECTION, OIL PAN	9-132
INSPECTION, OIL PUMP	9-133
INSPECTION, OIL PUMP	21-150,21-315
INSPECTION, OTHER	30-12
INSPECTION, OVERDRIVE UNIT	21-161
INSPECTION, OVERRUNNING CLUTCH CAM/OVERDRIVE PISTON RETAINER	21-173
INSPECTION, PARKING BRAKE	30-12
INSPECTION, PISTON & CONNECTING ROD	9-119
INSPECTION, PLANETARY GEARTRAIN	21-323
INSPECTION, PLANETARY GEARTRAIN/ OUTPUT SHAFT	21-178
INSPECTION, RADIATOR - 4.0L	7-46
INSPECTION, RADIATOR - 4.7L	7-44
INSPECTION, RADIATOR FAN - 4.0L	7-32
INSPECTION, RADIATOR PRESSURE CAP	7-53
INSPECTION, RADIO, TAPE PLAYER AND/OR CD PLAYER	30-13
INSPECTION, REAR CLUTCH	21-185
INSPECTION, REAR WIPER & WASHER SYSTEM	8R-35
INSPECTION, RECEIVING	30-3
INSPECTION, ROCKER ARM / ADJUSTER ASSEMBLY	9-27
INSPECTION, SEAT BELTS, SHOULDER BELTS, RETRACTORS AND HEAD RESTRAINTS	30-10
INSPECTION, SEATS	30-10
INSPECTION, SERVICE BRAKES	30-12
INSPECTION, SHIFT/CLUTCH INTERLOCK SYSTEM	30-14
INSPECTION, SPEED CONTROL	30-13
INSPECTION, SQUEAKS, RATTLES AND WIND NOISE	30-12
INSPECTION, STEERING AND HANDLING	30-12
INSPECTION, TIMING BELT/CHAIN AND SPROCKETS	9-147
INSPECTION, TIRE PRESSURES	30-7
INSPECTION, TRANSFER CASE - NV242	21-14
INSPECTION, TRANSFER CASE - NV247	21-47
INSPECTION, TRANSMISSION/TRANSFER CASE	30-12
INSPECTION, TRIP COMPUTER/ MAINTENANCE REMINDER	30-13
INSPECTION, TURN AND EMERGENCY SIGNALS	30-14
INSPECTION, VALVE BODY	21-229,21-338
INSPECTION, VISUAL	30-7
INSPECTION, WATER PUMP - 4.0L	7-52
INSPECTION, WATER PUMP - 4.7L	7-49
INSPECTION, WINDOWS, DOORS AND LOCKS	30-10
INSPECTION WINDSHIELD WIPERS/ WASHERS, ROAD TEST	30-13
INSPECTION, WIRING	30-7
INSTALLATION, 4.0L	9-18,9-19
INSTALLATION, 4.0L	14-18,14-37,14-41,14-42, 14-44,14-49,14-50,14-52
INSTALLATION, 4.0L	24-63,24-66
INSTALLATION, 4.0L	8I-7
INSTALLATION, 4.0L	8P-3
INSTALLATION, 4.0L ENGINE	7-18,7-20,7-34, 7-36,7-38
INSTALLATION, 4.0L ENGINE	19-38
INSTALLATION, 4.7L	9-82
INSTALLATION, 4.7L	14-18,14-38,14-41,14-42, 14-44,14-49,14-51,14-53
INSTALLATION, 4.7L	24-67
INSTALLATION, 4.7L	8I-8
INSTALLATION, 4.7L	8P-3
INSTALLATION, 4.7L ENGINE	7-18,7-23,7-34, 7-36,7-38
INSTALLATION, 4.7L ENGINE	19-38
INSTALLATION, A/C COMPRESSOR	24-58
INSTALLATION, A/C COMPRESSOR CLUTCH	24-15
INSTALLATION, A/C COMPRESSOR CLUTCH RELAY	24-17
INSTALLATION, A/C CONDENSER	24-60
INSTALLATION, A/C DISCHARGE LINE	24-61
INSTALLATION, A/C EVAPORATOR	24-65
INSTALLATION, A/C HEATER CONTROL	24-25
INSTALLATION, A/C HIGH PRESSURE SWITCH	24-25
INSTALLATION, A/C LOW PRESSURE SWITCH	24-26
INSTALLATION, ACCELERATOR PEDAL	14-35
INSTALLATION, ADAPTER HOUSING SEAL	21-288
INSTALLATION, AIR EXHAUSTER	23-115
INSTALLATION, AIR OUTLETS	24-36
INSTALLATION, AIRBAG CONTROL MODULE	8O-8
INSTALLATION, AMBIENT TEMPERATURE SENSOR	8M-12
INSTALLATION, AMPLIFIER	8A-5
INSTALLATION, A-PILLAR TRIM	23-158
INSTALLATION, ASSIST HANDLE	23-159
INSTALLATION, AUTO HEADLAMP SENSOR	8L-5
INSTALLATION, AUTO SHUT DOWN RELAY	8I-4
INSTALLATION, AUTOMATIC DAY / NIGHT MIRROR	8N-13
INSTALLATION, AUTOMATIC TRANSMISSION - 42RE	21-105
INSTALLATION, AUTOMATIC TRANSMISSION - 545RFE	21-261
INSTALLATION, AXLE - C/V JOINT	3-34
INSTALLATION, AXLE - U-JOINT	3-36
INSTALLATION, AXLE BEARINGS/SEALS	3-105, 3-67

Description	Group-Page
INSTALLATION, AXLE SHAFT SEALS	3-34
INSTALLATION, AXLE SHAFTS	3-105,3-33,3-67
INSTALLATION, BATTERY	8F-18
INSTALLATION, BATTERY CABLE	8F-23
INSTALLATION, BATTERY HOLDDOWN	8F-19
INSTALLATION, BATTERY TEMPERATURE SENSOR	8F-30
INSTALLATION, BATTERY TRAY	8F-26
INSTALLATION, BLEND DOOR	24-46
INSTALLATION, BLEND DOOR ACTUATOR	24-31
INSTALLATION, BLOWER MOTOR	24-38
INSTALLATION, BLOWER MOTOR CONTROLLER	24-27
INSTALLATION, BLOWER MOTOR RESISTOR BLOCK	24-28
INSTALLATION, BODY CONTROL/ CENTRAL TIMER MODULE	8E-7
INSTALLATION, B-PILLAR DOOR SEAL	23-186
INSTALLATION, B-PILLAR LOWER TRIM	23-159
INSTALLATION, B-PILLAR UPPER TRIM	23-159
INSTALLATION, BRAKE FLUID LEVEL SWITCH	5-7
INSTALLATION, BRAKE LAMP SWITCH	8L-6
INSTALLATION, BRAKE TRANSMISSION SHIFT INTERLOCK MECHANISM	21-128,21-291
INSTALLATION, BULB	8L-16,8L-20,8L-30,8L-31, 8L-32,8L-7
INSTALLATION, BULBS	8L-28,8L-29
INSTALLATION, BUSHINGS	2-8
INSTALLATION, CAMSHAFT	9-32
INSTALLATION, CAMSHAFT BEARINGS	9-32
INSTALLATION, CAMSHAFT(S) - LEFT	9-89
INSTALLATION, CAMSHAFT(S) - RIGHT	9-100
INSTALLATION, CARGO AREA CARPET	23-161
INSTALLATION, CATALYTIC CONVERTER - 4.0L	11-5
INSTALLATION, CATALYTIC CONVERTER - 4.7L	11-7
INSTALLATION, CD CHANGER	8A-13
INSTALLATION, CHECK STRAP	23-107,23-99
INSTALLATION, CHILD TETHER	8O-8
INSTALLATION, CHMSL	8L-7
INSTALLATION, CIGAR LIGHTER OUTLET DOOR SPRING	8W-3
INSTALLATION, CLOCKSPRING	8O-12
INSTALLATION, CLUSTER BEZEL	23-135
INSTALLATION, COIL RAIL	8I-10
INSTALLATION, COLLAPSIBLE SPACER	3-109, 3-38,3-72
INSTALLATION, COLUMN	19-8
INSTALLATION, COMBINATION FLASHER	8L-10
INSTALLATION, CONNECTOR - AUGAT	8W-8
INSTALLATION, CONNECTOR - MOLEX	8W-9
INSTALLATION, CONNECTOR - THOMAS AND BETTS	8W-10
INSTALLATION, CONTROLLER ANTILOCK BRAKE	8E-9
INSTALLATION, COOLANT LEVEL SENSOR	7-27
INSTALLATION, COWL GRILLE	23-114
INSTALLATION, COWL TRIM	23-161
INSTALLATION, COWL WEATHERSTRIP	23-187
INSTALLATION, C-PILLAR TRIM	23-162
INSTALLATION, CRANKSHAFT	9-111
INSTALLATION, CRANKSHAFT MAIN BEARINGS	9-40
INSTALLATION, CRANKSHAFT OIL SEAL - FRONT	9-115,9-41
INSTALLATION, CRANKSHAFT OIL SEAL - REAR	9-116,9-42
INSTALLATION, CYLINDER HEAD	9-21
INSTALLATION, CYLINDER HEAD - LEFT	9-85
INSTALLATION, CYLINDER HEAD - RIGHT	9-98
INSTALLATION, CYLINDER HEAD COVER(S)	9-23
INSTALLATION, DAMPER	19-32
INSTALLATION, DAYTIME RUNNING LAMP MODULE	8L-10
INSTALLATION, DEFROSTER DUCTS	24-39
INSTALLATION, DIFFERENTIAL	3-113,3-41,3-75
INSTALLATION, DIFFERENTIAL CASE BEARINGS	3-119,3-43,3-81
INSTALLATION, DIODE	8W-10
INSTALLATION, DOOR	23-100,23-108
INSTALLATION, DOOR GLASS	23-100,23-108, 23-182
INSTALLATION, DOOR MODULE	8E-13
INSTALLATION, DOOR SILL SCUFF PLATE	23-163
INSTALLATION, DOOR SILL TRIM	23-163
INSTALLATION, D-PILLAR AIR EXHAUSTER	23-115
INSTALLATION, D-PILLAR APPLIQUE	23-115
INSTALLATION, D-PILLAR TRIM	23-163
INSTALLATION, DRAG LINK	19-33
INSTALLATION, DRIVER AIRBAG	8O-17
INSTALLATION, DRIVER HEATED SEAT SWITCH	8G-7
INSTALLATION, DRIVER SEAT SWITCH	8N-22
INSTALLATION, ELECTRONIC GOVERNOR	21-134
INSTALLATION, ELECTRONIC VEHICLE INFO CENTER	8M-9
INSTALLATION, ENGINE - 4.0L	9-13
INSTALLATION, ENGINE 4.7L	9-74
INSTALLATION, ENGINE TO BODY GROUND STRAP	8A-17
INSTALLATION, EVAP/PURGE SOLENOID	25-27
INSTALLATION, EXHAUST MANIFOLD	9-59
INSTALLATION, EXHAUST MANIFOLD - LEFT	9-138
INSTALLATION, EXHAUST MANIFOLD - RIGHT	9-139
INSTALLATION, EXHAUST PIPE - 4.0L	11-9
INSTALLATION, EXHAUST PIPE - 4.7L	11-11
INSTALLATION, EXHAUST-TO-BODY GROUND STRAP	8A-17
INSTALLATION, EXTENSION HOUSING BUSHING	21-135
INSTALLATION, EXTENSION HOUSING SEAL	21-135
INSTALLATION, EXTERIOR HANDLE	23-101, 23-109,23-93
INSTALLATION, EXTERIOR NAME PLATES	23-115
INSTALLATION, FENDER/QUARTER PANEL	23-114
INSTALLATION, FIXED ORIFICE FITTING	25-27
INSTALLATION, FLEX PLATE	9-117
INSTALLATION, FLIP-UP GLASS	23-94
INSTALLATION, FLIP-UP GLASS LATCH	23-94
INSTALLATION, FLIP-UP GLASS LATCH STRIKER	23-95
INSTALLATION, FLIP-UP GLASS SWITCH	23-95
INSTALLATION, FLIP-UP GLASS WEATHERSTRIP	23-188
INSTALLATION, FLOOR CONSOLE	23-165
INSTALLATION, FLOOR DISTRIBUTION DUCTS	24-39
INSTALLATION, FLUID COOLER	19-40
INSTALLATION, FLUID RESERVOIR	5-21
INSTALLATION, FOG LAMP	8L-11
INSTALLATION, FOG LAMP UNIT	8L-11
INSTALLATION, FOLDING REAR SEAT BACK LATCH / LOCK	23-180
INSTALLATION, FOLDING REAR SEAT BACK LATCH HANDLE	23-180
INSTALLATION, FOLDING REAR SEAT BACK LATCH/HINGE	23-181
INSTALLATION, FRONT ABSORBER	13-1
INSTALLATION, FRONT AXLE - 186FBI	3-21
INSTALLATION, FRONT CARPET	23-161
INSTALLATION, FRONT CHECK VALVE	8R-9
INSTALLATION, FRONT DISC BRAKE CALIPER	5-19
INSTALLATION, FRONT DISC BRAKE ROTOR	5-28
INSTALLATION, FRONT DISC BRAKE SHOES	5-12
INSTALLATION, FRONT DOOR	23-114
INSTALLATION, FRONT DOOR GLASS RUN WEATHERSTRIP	23-187
INSTALLATION, FRONT DOOR INNER BELT WEATHERSTRIP	23-187
INSTALLATION, FRONT DOOR OUTER BELT WEATHERSTRIP	23-188
INSTALLATION, FRONT DOOR SECOND WEATHERSTRIP	23-188
INSTALLATION, FRONT DOOR SPEAKER	8A-23
INSTALLATION, FRONT DOOR WEATHERSTRIP	23-189
INSTALLATION, FRONT FASCIA	13-1
INSTALLATION, FRONT FENDER	23-116
INSTALLATION, FRONT HEADREST	23-173
INSTALLATION, FRONT HEADREST SLEEVE	23-173
INSTALLATION, FRONT MOUNT	9-124
INSTALLATION, FRONT OUTPUT SHAFT SEAL	21-35,21-61
INSTALLATION, FRONT PARKING BRAKE CABLE	5-31
INSTALLATION, FRONT POWER OUTLET	8W-15
INSTALLATION, FRONT SEAT	23-174
INSTALLATION, FRONT SEAT BACK	23-174
INSTALLATION, FRONT SEAT BACK COVER	23-175
INSTALLATION, FRONT SEAT BELT & RETRACTOR	8O-19
INSTALLATION, FRONT SEAT BELT BUCKLE	8O-20
INSTALLATION, FRONT SEAT CUSHION	23-175
INSTALLATION, FRONT SEAT SIDE SHIELD	23-176
INSTALLATION, FRONT SKID PLATE	13-7
INSTALLATION, FRONT TOW HOOK	13-7
INSTALLATION, FRONT TUBE AXLE	3-15
INSTALLATION, FRONT WASHER NOZZLE	8R-11
INSTALLATION, FRONT WASHER PUMP/MOTOR	8R-12
INSTALLATION, FRONT WHEEL SPEED SENSOR	5-38
INSTALLATION, FRONT WIPER ARM	8R-13
INSTALLATION, FRONT WIPER BLADE	8R-14
INSTALLATION, FRONT WIPER MODULE	8R-16
INSTALLATION, FUEL FILL DOOR	23-117
INSTALLATION, FUEL FILTER/PRESSURE REGULATOR	14-6
INSTALLATION, FUEL INJECTOR	14-39
INSTALLATION, FUEL LEVEL SENDING UNIT / SENSOR	14-8
INSTALLATION, FUEL PUMP MODULE	14-13
INSTALLATION, FUEL TANK	14-20
INSTALLATION, FUSE COVER	8W-19
INSTALLATION, GAS PROP	23-121
INSTALLATION, GEAR	19-15
INSTALLATION, GEARSHIFT CABLE	21-146, 21-296
INSTALLATION, GENERATOR	8F-31
INSTALLATION, GLASS RUN CHANNEL	23-101
INSTALLATION, GLOVE BOX	23-137
INSTALLATION, GLOVE BOX LAMP/ SWITCH	8L-35
INSTALLATION, GLOVE BOX LATCH	23-137
INSTALLATION, GLOVE BOX LATCH STRIKER	23-139
INSTALLATION, GRILLE	23-118
INSTALLATION, G-SWITCH	5-39
INSTALLATION, HCU (HYDRAULIC CONTROL UNIT)	5-42
INSTALLATION, HEADLAMP MOUNTING MODULE	23-118
INSTALLATION, HEADLAMP UNIT	8L-17
INSTALLATION, HEADLINER	23-166
INSTALLATION, HEAT/DEFROST - PANEL/DEFROST DOOR ELECTRIC ACTUATOR	24-32
INSTALLATION, HEAT/DEFROST DOOR	24-49
INSTALLATION, HEAT/DEFROST DOOR VACUUM ACTUATOR	24-33
INSTALLATION, HEATER CORE	24-69
INSTALLATION, HINGE	23-102,23-109,23-121, 23-95
INSTALLATION, HOOD	23-122
INSTALLATION, HOOD AJAR SWITCH	8Q-10
INSTALLATION, HOOD AJAR SWITCH BRACKET	8Q-10
INSTALLATION, HOOD AJAR SWITCH STRIKER	8Q-11
INSTALLATION, HOOD SEAL	23-189
INSTALLATION, HORN	8H-4
INSTALLATION, HORN RELAY	8H-6
INSTALLATION, HORN SWITCH	8H-8
INSTALLATION, HOSES	19-41
INSTALLATION, HUB / BEARING	2-9
INSTALLATION, HVAC HOUSING	24-45
INSTALLATION, HYDRAULIC LIFTERS	9-43
INSTALLATION, IGNITION COIL	8I-12
INSTALLATION, IGNITION COIL CAPACITOR	8I-13
INSTALLATION, IGNITION SWITCH - IGNITION SWITCH	19-11
INSTALLATION, IGNITION-OFF DRAW FUSE	8W-4
INSTALLATION, INLET FILTER	14-22
INSTALLATION, INPUT SPEED SENSOR	21-309

Description	Group-Page
INSTALLATION, INSIDE HANDLE ACTUATOR	23-103,23-109
INSTALLATION, INSTRUMENT CLUSTER	8J-12
INSTALLATION, INSTRUMENT PANEL ANTENNA CABLE	8A-13
INSTALLATION, INSTRUMENT PANEL C-CHANNEL COVER BRACKET	23-145
INSTALLATION, INSTRUMENT PANEL CENTER BEZEL - LOWER	23-146
INSTALLATION, INSTRUMENT PANEL CENTER BEZEL - UPPER	23-147
INSTALLATION, INSTRUMENT PANEL CENTER FLOOR TUNNEL BRACKET	23-148
INSTALLATION, INSTRUMENT PANEL COURTESY LAMP BRACKET	23-149
INSTALLATION, INSTRUMENT PANEL DUCTS	24-39
INSTALLATION, INSTRUMENT PANEL END CAP	23-140
INSTALLATION, INSTRUMENT PANEL INTERMEDIATE BRACKET	23-150
INSTALLATION, INSTRUMENT PANEL LOWER RIGHT CENTER BEZEL	23-150
INSTALLATION, INSTRUMENT PANEL PLENUM BRACKET	23-152
INSTALLATION, INSTRUMENT PANEL SPEAKER	8A-23
INSTALLATION, INSTRUMENT PANEL STEERING COLUMN BRACKET	23-152
INSTALLATION, INSTRUMENT PANEL STEERING COLUMN SUPPORT BRACKET	23-153
INSTALLATION, INSTRUMENT PANEL STUCTURAL DUCT	23-140
INSTALLATION, INSTRUMENT PANEL SYSTEM	23-133
INSTALLATION, INSTRUMENT PANEL TOP COVER	23-141
INSTALLATION, INSTRUMENT PANEL TOP PAD	23-143
INSTALLATION, INSTRUMENT PANEL TRIM BEZEL - PASSENGER	23-155
INSTALLATION, INSULATION	23-122
INSTALLATION, INTAKE MANIFOLD	9-137,9-58
INSTALLATION, INTAKE/EXHAUST VALVES & SEATS	9-105,9-25,9-94
INSTALLATION, INTRUMENT PANEL TRIM BEZEL - DRIVER	23-154
INSTALLATION, JUNCTION BLOCK	8W-6
INSTALLATION, KNUCKLE	2-10
INSTALLATION, LAMP	8L-20,8L-29,8L-30,8L-31, 8L-32
INSTALLATION, LATCH	23-103,23-110,23-122, 23-96
INSTALLATION, LATCH RELEASE CABLE	23-123
INSTALLATION, LATCH STRIKER	23-104,23-110, 23-96
INSTALLATION, LEAK DETECTION PUMP	25-30
INSTALLATION, LEFT MULTI-FUNCTION SWITCH	8L-26
INSTALLATION, LEFT SIDE	9-92
INSTALLATION, LEVER	5-33
INSTALLATION, LICENSE PLATE LAMP UNIT	8L-20
INSTALLATION, LIFTGATE	23-97
INSTALLATION, LIFTGATE INSULATOR	23-98
INSTALLATION, LIFTGATE OPENING UPPER TRIM	23-167
INSTALLATION, LIFTGATE OPENING WEATHERSTRIP	23-190
INSTALLATION, LIFTGATE TRIM PANEL	23-98
INSTALLATION, LINE PRESSURE (LP) SENSOR	21-310
INSTALLATION, LIQUID LINE	24-62
INSTALLATION, LOCK CYLINDER	23-104
INSTALLATION, LOCK CYLINDER HOUSING - KEY CYLINDER	19-14
INSTALLATION, LOWER CONTROL ARM	2-11, 2-18
INSTALLATION, LOWER LIFTGATE OPENING TRIM PANEL	23-98
INSTALLATION, LUGGAGE RACK	23-119
INSTALLATION, LUMBAR CONTROL SWITCH	8N-24
INSTALLATION, MASTER CYLINDER	5-23
INSTALLATION, MEMORY HEATED SEAT/MIRROR MODULE	8E-15
INSTALLATION, MEMORY SET SWITCH	8N-26
INSTALLATION, MUFFLER	11-13
INSTALLATION, MULTI-FUNCTION SWITCH MOUNTING HOUSING	8L-27
INSTALLATION, O2S HEATER RELAY	14-44
INSTALLATION, O2S SENSOR	14-46
INSTALLATION, OIL FILTER	9-131,9-54
INSTALLATION, OIL PAN	9-132,9-55
INSTALLATION, OIL PRESSURE SENSOR/SWITCH	9-133
INSTALLATION, OIL PUMP	9-135,9-57
INSTALLATION, OIL PUMP FRONT SEAL	21-318
INSTALLATION, OUTPUT SHAFT FRONT BEARING	21-152
INSTALLATION, OUTPUT SHAFT REAR BEARING	21-152
INSTALLATION, OUTPUT SPEED SENSOR	21-319
INSTALLATION, OVERDRIVE UNIT	21-171
INSTALLATION, OVERHEAD CONSOLE	8M-5
INSTALLATION, PANEL OUTLET DOOR	24-49
INSTALLATION, PANEL/DEFROST DOOR	24-49
INSTALLATION, PANEL/DEFROST DOOR VACUUM ACTUATOR	24-33
INSTALLATION, PARK/NEUTRAL POSITION SWITCH	21-175
INSTALLATION, PASSENGER AIRBAG	8O-21
INSTALLATION, PASSENGER HEATED SEAT SWITCH	8G-12
INSTALLATION, PASSENGER SEAT SWITCH	8N-28
INSTALLATION, PCV VALVE - 4.7L	25-32
INSTALLATION, PEDAL	5-23
INSTALLATION, PINION GEAR/RING GEAR	3-122,3-45,3-84
INSTALLATION, PINION SEAL	3-108,3-36,3-70
INSTALLATION, PISTON & CONNECTING ROD	9-119,9-46
INSTALLATION, PITMAN ARM	19-33
INSTALLATION, PITMAN BEARING	19-21
INSTALLATION, PITMAN SHAFT	19-19
INSTALLATION, PITMAN SHAFT SEAL	19-24
INSTALLATION, POWER BRAKE BOOSTER	5-25
INSTALLATION, POWER DISTRIBUTION CENTER	8W-12
INSTALLATION, POWER OUTLET DOOR	23-156
INSTALLATION, POWER OUTLET RELAY	8W-17
INSTALLATION, POWER WINDOW SWITCH	8N-36
INSTALLATION, POWERTRAIN CONTROL MODULE	8E-21
INSTALLATION, PROPELLER SHAFT - FRONT	3-7
INSTALLATION, PROPELLER SHAFT - FRONT 4.7L	3-8
INSTALLATION, PROPELLER SHAFT - REAR	3-9
INSTALLATION, PULLEY	19-41
INSTALLATION, PWM FAN CONTROL MODULE - 4.0L	7-42
INSTALLATION, QUARTER TRIM PANEL	23-168
INSTALLATION, QUARTER WINDOW	23-183
INSTALLATION, RADIATOR - 4.0L	7-46
INSTALLATION, RADIATOR - 4.7L	7-44
INSTALLATION, RADIATOR FAN - 4.0L	7-32
INSTALLATION, RADIATOR FAN - 4.7L	7-29
INSTALLATION, RADIO	8A-16
INSTALLATION, READING LAMP	8L-36
INSTALLATION, REAR ABSORBER	13-2
INSTALLATION, REAR AXLE - 198RBI	3-55
INSTALLATION, REAR AXLE - 226RBA	3-93
INSTALLATION, REAR DISC BRAKE CALIPER	5-20
INSTALLATION, REAR DISC BRAKE ROTOR	5-28
INSTALLATION, REAR DISC BRAKE SHOES	5-12
INSTALLATION, REAR DOOR	23-114
INSTALLATION, REAR DOOR INNER BELT WEATHERSTRIP	23-190
INSTALLATION, REAR DOOR OUTER BELT WEATHERSTRIP	23-190
INSTALLATION, REAR DOOR SECONDARY WEATHERSTRIP	23-191
INSTALLATION, REAR DOOR SPEAKER	8A-22
INSTALLATION, REAR DOOR WEATHERSTRIP	23-191
INSTALLATION, REAR FASCIA	13-4
INSTALLATION, REAR FLOOR HEAT DUCT	24-41
INSTALLATION, REAR HEADREST	23-177
INSTALLATION, REAR HEADREST FOLDING MECHANISM	23-178
INSTALLATION, REAR HEADREST RELEASE KNOB	23-177
INSTALLATION, REAR HEADREST SLEEVE	23-178
INSTALLATION, REAR MOUNT	9-125
INSTALLATION, REAR PARKING BRAKE CABLES	5-32
INSTALLATION, REAR POWER OUTLET	8W-16
INSTALLATION, REAR RETAINER BUSHING AND SEAL	21-62
INSTALLATION, REAR RETAINER BUSHING AND SEAL - NV242HD	21-36
INSTALLATION, REAR SEAT BACK	23-178
INSTALLATION, REAR SEAT BACK COVER	23-179
INSTALLATION, REAR SEAT BELT & RETRACTOR	8O-23
INSTALLATION, REAR SEAT BELT BUCKLE	8O-24
INSTALLATION, REAR SEAT CUSHION	23-179
INSTALLATION, REAR SEAT CUSHION COVER	23-180
INSTALLATION, REAR STORAGE BOX	23-168
INSTALLATION, REAR TOW HOOK	13-7
INSTALLATION, REAR VIEW MIRROR	23-168
INSTALLATION, REAR WASHER NOZZLE	8R-38
INSTALLATION, REAR WASHER PUMP/MOTOR	8R-38
INSTALLATION, REAR WHEEL SPEED SENSOR	5-41
INSTALLATION, REAR WINDOW DEFOGGER RELAY	8G-18
INSTALLATION, REAR WIPER ARM	8R-40
INSTALLATION, REAR WIPER BLADE	8R-42
INSTALLATION, REAR WIPER MODULE	8R-44
INSTALLATION, REARVIEW MIRROR SUPPORT BRACKET	23-168
INSTALLATION, RECIRCULATION DOOR	24-50
INSTALLATION, RECIRCULATION DOOR ELECTRIC ACTUATOR	24-34
INSTALLATION, RECIRCULATION DOOR VACUUM ACTUATOR	24-34
INSTALLATION, REMOTE SWITCHES	8A-20
INSTALLATION, RESERVOIR	19-42
INSTALLATION, RIGHT MULTI-FUNCTION SWITCH	8R-20
INSTALLATION, RIGHT SIDE	9-103
INSTALLATION, ROCKER ARM / ADJUSTER ASSEMBLY	9-106,9-27,9-95
INSTALLATION, ROOF RAIL WEATHERSTRIP / RETAINER	23-191
INSTALLATION, SEAT BELT TURNING LOOP ADJUSTER	8O-27
INSTALLATION, SEAT TRACK & RECLINER ASSEMBLY	23-176
INSTALLATION, SEAT TRACK ADJUSTER	23-176
INSTALLATION, SENTRY KEY IMMOBILIZER MODULE	8E-23
INSTALLATION, SERVO	8P-6
INSTALLATION, SHIFT CABLE	21-36,21-63
INSTALLATION, SHIFT MECHANISM	21-189, 21-326
INSTALLATION, SHIPPED LOOSE ITEMS	30-11
INSTALLATION, SHOCK	2-11,2-18
INSTALLATION, SHOES	5-35
INSTALLATION, SIDE VIEW MIRROR	23-120
INSTALLATION, SIDE VIEW MIRROR GLASS	23-120
INSTALLATION, SIDEVIEW MIRROR	8N-16
INSTALLATION, SPARK PLUG	8I-16
INSTALLATION, SPOOL VALVE	19-25
INSTALLATION, SPRING	2-12,2-19
INSTALLATION, STABILIZER BAR	2-13,2-20
INSTALLATION, STARTER MOTOR	8F-41
INSTALLATION, STARTER MOTOR RELAY	8F-44
INSTALLATION, STEERING COLUMN OPENING COVER	23-157
INSTALLATION, STEERING GEAR HOUSING PLUG	19-27
INSTALLATION, STEERING WHEEL	19-14
INSTALLATION, STRUCTURAL COVER	9-123
INSTALLATION, STRUCTURAL SUPPORT	9-50
INSTALLATION, STUDS	22-10
INSTALLATION, SUN VISOR	23-169

Description	Group-Page
INSTALLATION, SWITCH	8P-7
INSTALLATION, TERMINAL	8W-11
INSTALLATION, THERMAL GUARD	8F-27
INSTALLATION, TIE ROD END	19-34
INSTALLATION, TIMING BELT / CHAIN COVER(S)	9-146,9-60
INSTALLATION, TIMING BELT/CHAIN AND SPROCKETS	9-148,9-61
INSTALLATION, TORQUE CONVERTER	21-198, 21-332
INSTALLATION, TRACK BAR	2-13
INSTALLATION, TRAILER HITCH	13-8
INSTALLATION, TRANSFER CASE - NV242	21-31
INSTALLATION, TRANSFER CASE - NV247	21-58
INSTALLATION, TRANSFER CASE SKID PLATE	13-8
INSTALLATION, TRANSMISSION SOLENOID/TRS ASSEMBLY	21-335
INSTALLATION, TRIM PANEL	23-105,23-111
INSTALLATION, TURNING LOOP HEIGHT ADJUSTER KNOB	8O-28
INSTALLATION, UPPER BALL JOINT	2-21
INSTALLATION, UPPER CONTROL ARM	2-15, 2-22
INSTALLATION, VACUUM CHECK VALVE	24-35
INSTALLATION, VACUUM RESERVOIR	24-35
INSTALLATION, VACUUM RESERVOIR	8P-8
INSTALLATION, VALVE BODY	21-239,21-341
INSTALLATION, VALVE SPRINGS	9-29
INSTALLATION, VANITY LAMP	8L-36
INSTALLATION, VAPOR CANISTER	25-33
INSTALLATION, VIBRATION DAMPER	9-122,9-50
INSTALLATION, WASHER FLUID LEVEL SWITCH	8R-22
INSTALLATION, WASHER RESERVOIR	8R-24
INSTALLATION, WATER PUMP - 4.0L	7-52
INSTALLATION, WATER PUMP - 4.7L	7-49
INSTALLATION, WATER PUMP INLET TUBE	7-54
INSTALLATION, WATERDAM	23-105,23-111
INSTALLATION, WHEEL COVERS	30-7
INSTALLATION, WINDOW MOTOR	8N-38
INSTALLATION, WINDOW REGULATOR	23-106, 23-112
INSTALLATION, WINDSHIELD	23-185
INSTALLATION, WIPER ARM PARK RAMP	8R-44
INSTALLATION, WIPER HIGH/LOW RELAY	8R-27
INSTALLATION, WIPER ON/OFF RELAY	8R-30
INSTALLATION, WORM SHAFT	19-28
INSTRUMENT CLUSTER - ASSEMBLY	8J-10
INSTRUMENT CLUSTER - DESCRIPTION	8J-2
INSTRUMENT CLUSTER - DIAGNOSIS AND TESTING	8J-5
INSTRUMENT CLUSTER - DISASSEMBLY	8J-8
INSTRUMENT CLUSTER - INSTALLATION	8J-12
INSTRUMENT CLUSTER - OPERATION	8J-3
INSTRUMENT CLUSTER - REMOVAL	8J-7
INSTRUMENT PANEL ANTENNA CABLE - INSTALLATION	8A-13
INSTRUMENT PANEL ANTENNA CABLE - REMOVAL	8A-13
INSTRUMENT PANEL C-CHANNEL COVER BRACKET - INSTALLATION	23-145
INSTRUMENT PANEL C-CHANNEL COVER BRACKET - REMOVAL	23-145
INSTRUMENT PANEL CENTER BEZEL - LOWER - INSTALLATION	23-146
INSTRUMENT PANEL CENTER BEZEL - LOWER - REMOVAL	23-146
INSTRUMENT PANEL CENTER BEZEL - UPPER - INSTALLATION	23-147
INSTRUMENT PANEL CENTER BEZEL - UPPER - REMOVAL	23-147
INSTRUMENT PANEL CENTER FLOOR TUNNEL BRACKET - INSTALLATION	23-148
INSTRUMENT PANEL CENTER FLOOR TUNNEL BRACKET - REMOVAL	23-147
INSTRUMENT PANEL COURTESY LAMP BRACKET - INSTALLATION	23-149
INSTRUMENT PANEL COURTESY LAMP BRACKET - REMOVAL	23-148
INSTRUMENT PANEL DUCTS - INSTALLATION	24-39
INSTRUMENT PANEL DUCTS - REMOVAL	24-39
INSTRUMENT PANEL END CAP - INSTALLATION	23-140
INSTRUMENT PANEL END CAP - REMOVAL	23-139
INSTRUMENT PANEL INTERMEDIATE BRACKET - INSTALLATION	23-150
INSTRUMENT PANEL INTERMEDIATE BRACKET - REMOVAL	23-149
INSTRUMENT PANEL LOWER RIGHT CENTER BEZEL - INSTALLATION	23-150
INSTRUMENT PANEL LOWER RIGHT CENTER BEZEL - REMOVAL	23-150
INSTRUMENT PANEL PLENUM BRACKET - INSTALLATION	23-152
INSTRUMENT PANEL PLENUM BRACKET - REMOVAL	23-151
INSTRUMENT PANEL SPEAKER - INSTALLATION	8A-23
INSTRUMENT PANEL SPEAKER, SPEAKER	8A-22
INSTRUMENT PANEL STEERING COLUMN BRACKET - INSTALLATION	23-152
INSTRUMENT PANEL STEERING COLUMN BRACKET - REMOVAL	23-152
INSTRUMENT PANEL STEERING COLUMN SUPPORT BRACKET - INSTALLATION	23-153
INSTRUMENT PANEL STEERING COLUMN SUPPORT BRACKET - REMOVAL	23-153
INSTRUMENT PANEL STUCTURAL DUCT - INSTALLATION	23-140
INSTRUMENT PANEL STUCTURAL DUCT - REMOVAL	23-140
INSTRUMENT PANEL SYSTEM - DESCRIPTION	23-124
INSTRUMENT PANEL SYSTEM - INSTALLATION	23-133
INSTRUMENT PANEL SYSTEM - OPERATION	23-127
INSTRUMENT PANEL SYSTEM - REMOVAL	23-127
INSTRUMENT PANEL TOP COVER - INSTALLATION	23-141
INSTRUMENT PANEL TOP COVER - REMOVAL	23-141
INSTRUMENT PANEL TOP PAD - INSTALLATION	23-143
INSTRUMENT PANEL TOP PAD - REMOVAL	23-141
INSTRUMENT PANEL TRIM BEZEL - PASSENGER - INSTALLATION	23-155
INSTRUMENT PANEL TRIM BEZEL - PASSENGER - REMOVAL	23-155
INSULATION - INSTALLATION	23-122
INSULATION - REMOVAL	23-122
INSULATOR - INSTALLATION, LIFTGATE	23-98
INSULATOR - REMOVAL, LIFTGATE	23-98
INTAKE AIR TEMPERATURE SENSOR - DESCRIPTION	14-41
INTAKE AIR TEMPERATURE SENSOR - OPERATION	14-41
INTAKE MANIFOLD - CLEANING	9-136
INTAKE MANIFOLD - DESCRIPTION	9-135,9-57
INTAKE MANIFOLD - INSPECTION	9-137
INTAKE MANIFOLD - INSTALLATION	9-137,9-58
INTAKE MANIFOLD - REMOVAL	9-136,9-57
INTAKE MANIFOLD LEAKAGE - DIAGNOSIS AND TESTING	9-136
INTAKE MANIFOLD LEAKAGE DIAGNOSIS - DIAGNOSIS AND TESTING	9-57
INTAKE/EXHAUST VALVES & SEATS - DESCRIPTION	9-103,9-23,9-93
INTAKE/EXHAUST VALVES & SEATS - INSTALLATION	9-105,9-25,9-94
INTAKE/EXHAUST VALVES & SEATS - REMOVAL	9-104,9-25,9-93
INTERLOCK - ADJUSTMENTS, BRAKE TRANSMISSION SHIFT	21-129,21-291
INTERLOCK - DIAGNOSIS AND TESTING, BRAKE TRANSMISSION SHIFT	21-127,21-290
INTERLOCK MECHANISM - DESCRIPTION, BRAKE TRANSMISSION SHIFT	21-127,21-289
INTERLOCK MECHANISM - INSTALLATION, BRAKE TRANSMISSION SHIFT	21-128,21-291
INTERLOCK MECHANISM - OPERATION, BRAKE TRANSMISSION SHIFT	21-127,21-289
INTERLOCK MECHANISM - REMOVAL, BRAKE TRANSMISSION SHIFT	21-128,21-290
INTERLOCK SYSTEM - INSPECTION, SHIFT/CLUTCH	30-14
INTERMEDIATE BRACKET - INSTALLATION, INSTRUMENT PANEL	23-150
INTERMEDIATE BRACKET - REMOVAL, INSTRUMENT PANEL	23-149
INTERNATIONAL SYMBOLS - DESCRIPTION	Intro.-4
INTERNATIONAL SYMBOLS - DESCRIPTION	0-1
INTRODUCTION - DIAGNOSIS AND TESTING, ENGINE DIAGNOSIS	9-3,9-64
INTRUMENT PANEL TRIM BEZEL - DRIVER - INSTALLATION	23-154
INTRUMENT PANEL TRIM BEZEL - DRIVER - REMOVAL	23-154
INVERTED FLARING - STANDARD PROCEDURE, DOUBLE	5-7
ISO FLARING - STANDARD PROCEDURE	5-8
ITEMS - INSTALLATION, SHIPPED LOOSE	30-11
JACKING RECOMMENDATIONS - STANDARD PROCEDURES, HOISTING	0-12
JOINT - DESCRIPTION, UPPER SUSPENSION ARM, BUSHINGS, AND BALL	2-20
JOINT - INSTALLATION, AXLE - C/V	3-34
JOINT - INSTALLATION, UPPER BALL	2-21
JOINT - OPERATION, UPPER SUSPENSION ARM, BUSHINGS, AND BALL	2-20
JOINT - REMOVAL, AXLE - C/V	3-34
JOINT - REMOVAL, LOWER BALL	2-10
JOINT - REMOVAL, UPPER BALL	2-14,2-20
JOINTS - ASSEMBLY, DOUBLE CARDAN UNIVERSAL	3-11
JOINTS - ASSEMBLY, SINGLE CARDAN UNIVERSAL	3-9
JOINTS - DISASSEMBLY, DOUBLE CARDAN UNIVERSAL	3-10
JOINTS - DISASSEMBLY, SINGLE CARDAN UNIVERSAL	3-9
JOUNCE BUMPER - DESCRIPTION	2-17,2-9
JOUNCE BUMPER - OPERATION	2-17,2-9
JUMP STARTING PROCEDURE - STANDARD PROCEDURE	0-13
JUNCTION BLOCK - DESCRIPTION	8W-4
JUNCTION BLOCK - INSTALLATION	8W-6
JUNCTION BLOCK - OPERATION	8W-5
JUNCTION BLOCK - REMOVAL	8W-5
KEY - DESCRIPTION, TRANSPONDER	8Q-11
KEY - OPERATION, TRANSPONDER	8Q-12
KEY CYLINDER INSTALLATION, LOCK CYLINDER HOUSING	19-14
KEY CYLINDER REMOVAL, LOCK CYLINDER HOUSING	19-13
KEY IMMOBILIZER MODULE - DESCRIPTION, SENTRY	8E-21
KEY IMMOBILIZER MODULE - INSTALLATION, SENTRY	8E-23
KEY IMMOBILIZER MODULE - OPERATION, SENTRY	8E-21
KEY IMMOBILIZER MODULE - REMOVAL, SENTRY	8E-22
KEY IMMOBILIZER SYSTEM - DESCRIPTION, SENTRY	8Q-2
KEY IMMOBILIZER SYSTEM - DIAGNOSIS AND TESTING, SENTRY	8Q-5
KEY IMMOBILIZER SYSTEM - OPERATION, SENTRY	8Q-4
KEY TRANSPONDER PROGRAMMING - STANDARD PROCEDURES, SENTRY	8Q-7
KEY-IN IGNITION SWITCH - DESCRIPTION	19-12
KEY-IN IGNITION SWITCH - DIAGNOSIS AND TESTING	19-12
KEY-IN IGNITION SWITCH - OPERATION	19-12
KEYLESS ENTRY - INSPECTION	30-8
KEYLESS ENTRY MODULE - DESCRIPTION, REMOTE	8N-9
KEYLESS ENTRY MODULE - OPERATION, REMOTE	8N-9
KEYLESS ENTRY SYSTEM - DESCRIPTION, REMOTE	8N-2

Description	Group-Page
KEYLESS ENTRY SYSTEM - DIAGNOSIS AND TESTING, REMOTE	8N-6
KEYLESS ENTRY SYSTEM - OPERATION, REMOTE	8N-4
KEYLESS ENTRY TRANSMITTER - DESCRIPTION, REMOTE	8N-8
KEYLESS ENTRY TRANSMITTER - DIAGNOSIS AND TESTING, REMOTE	8N-8
KEYLESS ENTRY TRANSMITTER - OPERATION, REMOTE	8N-8
KNOB - INSTALLATION, REAR HEADREST RELEASE	23-177
KNOB - INSTALLATION, TURNING LOOP HEIGHT ADJUSTER	8O-28
KNOB - REMOVAL, REAR HEADREST RELEASE	23-177
KNOB - REMOVAL, TURNING LOOP HEIGHT ADJUSTER	8O-27
KNUCKLE - DESCRIPTION	2-9
KNUCKLE - INSTALLATION	2-10
KNUCKLE - OPERATION	2-9
KNUCKLE - REMOVAL, STEERING	2-9
LABEL - DESCRIPTION, VECI	Intro.-9
LABEL - DESCRIPTION, VEHICLE SAFETY CERTIFICATION	Intro.-10
LABELS - INSPECTION, INFORMATION	30-17
LAMP - DESCRIPTION, READING	8L-35
LAMP - DESCRIPTION, SKIS INDICATOR	8Q-11
LAMP - DESCRIPTION, TAIL	8L-28
LAMP - DIAGNOSIS AND TESTING, RED BRAKE WARNING	5-7
LAMP - INSTALLATION	8L-20,8L-29,8L-30, 8L-31,8L-32
LAMP - INSTALLATION, FOG	8L-11
LAMP - INSTALLATION, READING	8L-36
LAMP - INSTALLATION, VANITY	8L-36
LAMP - OPERATION, READING	8L-35
LAMP - OPERATION, SKIS INDICATOR	8Q-11
LAMP - OPERATION, TAIL	8L-28
LAMP - REMOVAL	8L-20,8L-28,8L-30,8L-31, 8L-32
LAMP - REMOVAL, FOG	8L-11
LAMP - REMOVAL, READING	8L-35
LAMP - REMOVAL, VANITY	8L-36
LAMP ADJUSTMENT, FOG LAMP UNIT - FOG	8L-11
LAMP BRACKET - INSTALLATION, INSTRUMENT PANEL COURTESY	23-149
LAMP BRACKET - REMOVAL, INSTRUMENT PANEL COURTESY	23-148
LAMP (MIL) - DESCRIPTION, MALFUNCTION INDICATOR	8J-22
LAMP (MIL) - OPERATION, MALFUNCTION INDICATOR	8J-22
LAMP MODULE - DESCRIPTION, DAYTIME RUNNING	8L-10
LAMP MODULE - INSTALLATION, DAYTIME RUNNING	8L-10
LAMP MODULE - OPERATION, DAYTIME RUNNING	8L-10
LAMP MODULE - REMOVAL, DAYTIME RUNNING	8L-10
LAMP SWITCH - ADJUSTMENT, BRAKE	8L-6
LAMP SWITCH - DESCRIPTION, BRAKE	8L-5
LAMP SWITCH - DIAGNOSIS AND TESTING, BRAKE	8L-5
LAMP SWITCH - INSTALLATION, BRAKE	8L-6
LAMP SWITCH - OPERATION, BRAKE	8L-5
LAMP SWITCH - REMOVAL, BRAKE	8L-6
LAMP UNIT - FOG LAMP ADJUSTMENT, FOG	8L-11
LAMP UNIT - INSTALLATION, FOG	8L-11
LAMP UNIT - INSTALLATION, LICENSE PLATE	8L-20
LAMP UNIT - REMOVAL, FOG	8L-11
LAMP UNIT - REMOVAL, LICENSE PLATE	8L-20
LAMPS INDICATOR - DESCRIPTION, FRONT FOG	8J-18
LAMPS INDICATOR - DESCRIPTION, REAR FOG	8J-25
LAMPS INDICATOR - OPERATION, FRONT FOG	8J-19
LAMPS INDICATOR - OPERATION, REAR FOG	8J-25
LAMPS, SPECIFICATIONS - EXTERIOR	8L-5
LAMP/SWITCH - INSTALLATION, GLOVE BOX	8L-35
LAMP/SWITCH - REMOVAL, GLOVE BOX	8L-34
LASH ADJUSTER NOISE DIAGNOSIS - DIAGNOSIS AND TESTING, HYDRAULIC	9-83, 9-97
LATCH - ADJUSTMENT	23-103
LATCH - INSTALLATION	23-103,23-110,23-122, 23-96
LATCH - INSTALLATION, FLIP-UP GLASS	23-94
LATCH - INSTALLATION, GLOVE BOX	23-137
LATCH / LOCK - INSTALLATION, FOLDING REAR SEAT BACK	23-180
LATCH / LOCK - REMOVAL, FOLDING REAR SEAT BACK	23-180
LATCH - REMOVAL	23-103,23-110,23-122,23-95
LATCH - REMOVAL, FLIP-UP GLASS	23-94
LATCH - REMOVAL, GLOVE BOX	23-137
LATCH HANDLE - INSTALLATION, FOLDING REAR SEAT BACK	23-180
LATCH HANDLE - REMOVAL, FOLDING REAR SEAT BACK	23-180
LATCH RELEASE CABLE - INSTALLATION	23-123
LATCH RELEASE CABLE - REMOVAL	23-123
LATCH STRIKER - INSTALLATION	23-104, 23-110,23-96
LATCH STRIKER - INSTALLATION, FLIP-UP GLASS	23-95
LATCH STRIKER - INSTALLATION, GLOVE BOX	23-139
LATCH STRIKER - REMOVAL	23-104,23-110, 23-96
LATCH STRIKER - REMOVAL, FLIP-UP GLASS	23-95
LATCH STRIKER - REMOVAL, GLOVE BOX	23-138
LATCH/HINGE - INSTALLATION, FOLDING REAR SEAT BACK	23-181
LATCH/HINGE - REMOVAL, FOLDING REAR SEAT BACK	23-181
LATCH/SAFETY CATCH - INSPECTION, HOOD	30-3
LEAD, ANTENNA BODY & CABLE - ANTENNA BASE	8A-9
LEAK - DIAGNOSIS AND TESTING, CONVERTER HOUSING FLUID	21-246,21-78
LEAK - DIAGNOSIS AND TESTING, ENGINE OIL	9-51
LEAK DETECTION PUMP - DESCRIPTION	25-28
LEAK DETECTION PUMP - INSTALLATION	25-30
LEAK DETECTION PUMP - REMOVAL	25-30
LEAK DOWN TEST - DIAGNOSIS AND TESTING, FUEL PRESSURE	14-2
LEAK INSPECTION - DIAGNOSIS AND TESTING, ENGINE OIL	9-128
LEAKAGE - DIAGNOSIS AND TESTING, CYLINDER COMBUSTION PRESSURE	9-70,9-8
LEAKAGE - DIAGNOSIS AND TESTING, INTAKE MANIFOLD	9-136
LEAKAGE - DIAGNOSIS AND TESTING, PUMP	19-37
LEAKAGE DIAGNOSIS - DIAGNOSIS AND TESTING, INTAKE MANIFOLD	9-57
LEAKS - DIAGNOSIS AND TESTING, COOLING SYSTEM TESTING	7-12
LEAKS - DIAGNOSIS AND TESTING, REAR SEAL AREA	9-128,9-9
LEAKS - DIAGNOSIS AND TESTING, REFRIGERANT SYSTEM	24-53
LEAKS - DIAGNOSIS AND TESTING, WATER	23-1
LEAKS - STANDARD PROCEDURE, REPAIRING	22-7
LEARN - STANDARD PROCEDURES, TCM QUICK	8E-26
LEFT - CLEANING, CYLINDER HEAD	9-85
LEFT - CLEANING, CYLINDER HEAD COVER(S)	9-92
LEFT - CLEANING, EXHAUST MANIFOLD	9-138
LEFT - DESCRIPTION, CAMSHAFT(S)	9-87
LEFT - DESCRIPTION, CYLINDER HEAD COVER(S)	9-92
LEFT - DESCRIPTION, EXHAUST MANIFOLD	9-137
LEFT - INSPECTION, CYLINDER HEAD	9-85
LEFT - INSPECTION, EXHAUST MANIFOLD	9-138
LEFT - INSTALLATION, CAMSHAFT(S)	9-89
LEFT - INSTALLATION, CYLINDER HEAD	9-85
LEFT - INSTALLATION, EXHAUST MANIFOLD	9-138
LEFT - REMOVAL, CAMSHAFT(S)	9-87
LEFT - REMOVAL, CYLINDER HEAD	9-83
LEFT - REMOVAL, EXHAUST MANIFOLD	9-138
LEFT MULTI-FUNCTION SWITCH - DESCRIPTION	8L-21
LEFT MULTI-FUNCTION SWITCH - DIAGNOSIS AND TESTING	8L-23
LEFT MULTI-FUNCTION SWITCH - INSTALLATION	8L-26
LEFT MULTI-FUNCTION SWITCH - OPERATION	8L-22
LEFT MULTI-FUNCTION SWITCH - REMOVAL	8L-25
LEFT SIDE - INSTALLATION	9-92
LEFT SIDE - REMOVAL	9-92
LEVEL - DIAGNOSIS AND TESTING, EFFECTS OF INCORRECT FLUID	21-136,21-292
LEVEL - STANDARD PROCEDURE, CHECKING BATTERY ELECTROLYTE	8F-9
LEVEL - STANDARD PROCEDURE, REFRIGERANT OIL	24-71
LEVEL CHECK - STANDARD PROCEDURE, FLUID	21-136
LEVEL CHECK - STANDARD PROCEDURES, FLUID	21-294
LEVEL SENDING UNIT / SENSOR - DESCRIPTION, FUEL	14-7
LEVEL SENDING UNIT / SENSOR - INSTALLATION, FUEL	14-8
LEVEL SENDING UNIT / SENSOR - OPERATION, FUEL	14-7
LEVEL SENDING UNIT / SENSOR - REMOVAL, FUEL	14-8
LEVEL SENSOR - INSTALLATION, COOLANT	7-27
LEVEL SENSOR - REMOVAL, COOLANT	7-26
LEVEL SWITCH - DESCRIPTION, WASHER FLUID	8R-21
LEVEL SWITCH - INSTALLATION, BRAKE FLUID	5-7
LEVEL SWITCH - INSTALLATION, WASHER FLUID	8R-22
LEVEL SWITCH - OPERATION, WASHER FLUID	8R-21
LEVEL SWITCH - REMOVAL, BRAKE FLUID	5-6
LEVEL SWITCH - REMOVAL, WASHER FLUID	8R-21
LEVELS - INSPECTION, FLUID	30-4
LEVER - INSTALLATION	5-33
LEVER - REMOVAL	5-32
LICENSE PLATE LAMP UNIT - INSTALLATION	8L-20
LICENSE PLATE LAMP UNIT - REMOVAL	8L-20
LIFTERS - CLEANING, HYDRAULIC	9-43
LIFTERS - DESCRIPTION, HYDRAULIC	9-43
LIFTERS - INSPECTION, HYDRAULIC	9-43
LIFTERS - INSTALLATION, HYDRAULIC	9-43
LIFTERS - REMOVAL, HYDRAULIC	9-43
LIFTGATE - INSTALLATION	23-97
LIFTGATE - LIFTGATE ADJUSTMENT	23-97
LIFTGATE - REMOVAL	23-97
LIFTGATE ADJUSTMENT, LIFTGATE	23-97
LIFTGATE AJAR SWITCH - DESCRIPTION	8L-32
LIFTGATE AJAR SWITCH - OPERATION	8L-33
LIFTGATE FLIP-UP GLASS POWER RELEASE SYSTEM - DESCRIPTION	8N-4
LIFTGATE FLIP-UP GLASS POWER RELEASE SYSTEM - DIAGNOSIS AND TESTING	8N-6
LIFTGATE FLIP-UP GLASS POWER RELEASE SYSTEM - OPERATION	8N-5
LIFTGATE INSULATOR - INSTALLATION	23-98
LIFTGATE INSULATOR - REMOVAL	23-98
LIFTGATE OPENING TRIM PANEL - INSTALLATION, LOWER	23-98
LIFTGATE OPENING TRIM PANEL - REMOVAL, LOWER	23-98
LIFTGATE OPENING UPPER TRIM - INSTALLATION	23-167
LIFTGATE OPENING UPPER TRIM - REMOVAL	23-167
LIFTGATE OPENING WEATHERSTRIP - INSTALLATION	23-190
LIFTGATE OPENING WEATHERSTRIP - REMOVAL	23-190
LIFTGATE TRIM PANEL - INSTALLATION	23-98
LIFTGATE TRIM PANEL - REMOVAL	23-97

Description	Group-Page
LIGHTER OUTLET - DESCRIPTION, CIGAR	8W-2
LIGHTER OUTLET - DIAGNOSIS & TESTING, CIGAR	8W-2
LIGHTER OUTLET - OPERATION, CIGAR	8W-2
LIGHTER OUTLET DOOR SPRING - INSTALLATION, CIGAR	8W-3
LIGHTER OUTLET DOOR SPRING - REMOVAL, CIGAR	8W-3
LIGHTS - INSPECTION, GAUGES/ WARNING	30-14
LIGHTS AND SWITCHES - INSPECTION	30-9
LIMITS - OPERATION, HIGH AND LOW	25-19
LINE - DESCRIPTION, PRESSURE	19-40
LINE - DESCRIPTION, REFRIGERANT	24-51
LINE - DESCRIPTION, RETURN	19-40
LINE - INSTALLATION, A/C DISCHARGE	24-61
LINE - INSTALLATION, LIQUID	24-62
LINE - OPERATION, PRESSURE	19-40
LINE - OPERATION, REFRIGERANT	24-51
LINE - OPERATION, RETURN	19-41
LINE - REMOVAL, A/C DISCHARGE	24-61
LINE - REMOVAL, LIQUID	24-62
LINE AND HOSES - DIAGNOSIS AND TESTING, BRAKE	5-7
LINE PRESSURE (LP) SENSOR - DESCRIPTION	21-310
LINE PRESSURE (LP) SENSOR - INSTALLATION	21-310
LINE PRESSURE (LP) SENSOR - OPERATION	21-310
LINE PRESSURE (LP) SENSOR - REMOVAL	21-310
LINES - DESCRIPTION, BRAKE	5-7
LINES - DESCRIPTION, FUEL	14-8
LINES - DIAGNOSIS AND TESTING, VACUUM	25-32
LINES/HOSES - INSPECTION	30-6
LINK - DESCRIPTION, DRAG	19-33
LINK - INSTALLATION, DRAG	19-33
LINK - OPERATION, DRAG	19-33
LINK - REMOVAL, DRAG	19-33
LINK CONNECTOR - DESCRIPTION, DATA	8E-10
LINK CONNECTOR - OPERATION, DATA	8E-10
LINKAGE - DESCRIPTION	19-31
LINKAGE, SPECIAL TOOLS - STEERING	19-32
LIQUID LINE - INSTALLATION	24-62
LIQUID LINE - REMOVAL	24-62
LOAD TEST - STANDARD PROCEDURE	8F-15
LOADS - STANDARD PROCEDURE, TESTING FOR SHORT TO GROUND ON FUSES POWERING SEVERAL	8W-7
LOCATIONS - DESCRIPTION, CONNECTOR/GROUND	8W-1
LOCATIONS - DESCRIPTION, SPLICE	8W-1
LOCATIONS - INSPECTION, FLUID FILL/CHECK	0-6
LOCATIONS, SPECIFICATIONS - SEALER	23-54
LOCATIONS, SPECIFICATIONS - STRUCTURAL ADHESIVE	23-71
LOCATIONS, SPECIFICATIONS - WELD	23-5
LOCK - INSTALLATION, FOLDING REAR SEAT BACK LATCH	23-180
LOCK - REMOVAL, FOLDING REAR SEAT BACK LATCH	23-180
LOCK - STANDARD PROCEDURES, HYDROSTATIC	9-10
LOCK / UNLOCK SWITCH - DESCRIPTION, DOOR CYLINDER	8N-7
LOCK / UNLOCK SWITCH - OPERATION, DOOR CYLINDER	8N-7
LOCK CYLINDER - INSTALLATION	23-104
LOCK CYLINDER - REMOVAL	23-104
LOCK CYLINDER HOUSING - KEY CYLINDER INSTALLATION	19-14
LOCK CYLINDER HOUSING - KEY CYLINDER REMOVAL	19-13
LOCK CYLINDERS - DESCRIPTION	23-1
LOCK MOTOR - DESCRIPTION, POWER	8N-7
LOCK MOTOR - DIAGNOSIS AND TESTING, POWER	8N-7
LOCK MOTOR - OPERATION, POWER	8N-7
LOCK SWITCH - DESCRIPTION, POWER	8N-9
LOCK SWITCH - OPERATION, POWER	8N-9
LOCK SYSTEM - DESCRIPTION, POWER	8N-1
LOCK SYSTEM - DIAGNOSIS AND TESTING, POWER	8N-5
LOCK SYSTEM - OPERATION, POWER	8N-4
LOCKS - INSPECTION, DOORS AND DOOR	30-8
LOCKS - INSPECTION, WINDOWS, DOORS	30-10
LOOP ADJUSTER - INSTALLATION, SEAT BELT TURNING	8O-27
LOOP ADJUSTER - REMOVAL, SEAT BELT TURNING	8O-26
LOOP HEIGHT ADJUSTER KNOB - INSTALLATION, TURNING	8O-28
LOOP HEIGHT ADJUSTER KNOB - REMOVAL, TURNING	8O-27
LOOSE ITEMS - INSTALLATION, SHIPPED	30-11
LOW COOLANT INDICATOR - DESCRIPTION	8J-20
LOW COOLANT INDICATOR - OPERATION	8J-21
LOW FUEL INDICATOR - DESCRIPTION	8J-21
LOW FUEL INDICATOR - OPERATION	8J-21
LOW LIMITS - OPERATION, HIGH	25-19
LOW PRESSURE SWITCH - DESCRIPTION, A/C	24-26
LOW PRESSURE SWITCH - DIAGNOSIS AND TESTING, A/C	24-26
LOW PRESSURE SWITCH - INSTALLATION, A/C	24-26
LOW PRESSURE SWITCH - OPERATION, A/C	24-26
LOW PRESSURE SWITCH - REMOVAL, A/C	24-26
LOWER - INSTALLATION, INSTRUMENT PANEL CENTER BEZEL	23-146
LOWER - REMOVAL, INSTRUMENT PANEL CENTER BEZEL	23-146
LOWER BALL JOINT - REMOVAL	2-10
LOWER CONTROL ARM - DESCRIPTION	2-10, 2-17
LOWER CONTROL ARM - INSTALLATION	2-11, 2-18
LOWER CONTROL ARM - OPERATION	2-10,2-18
LOWER CONTROL ARM - REMOVAL	2-10,2-18
LOWER LIFTGATE OPENING TRIM PANEL - INSTALLATION	23-98
LOWER LIFTGATE OPENING TRIM PANEL - REMOVAL	23-98
LOWER RIGHT CENTER BEZEL - INSTALLATION, INSTRUMENT PANEL	23-150
LOWER RIGHT CENTER BEZEL - REMOVAL, INSTRUMENT PANEL	23-150
LOWER TRIM - INSTALLATION, B-PILLAR	23-159
LOWER TRIM - REMOVAL, B-PILLAR	23-159
LOW/REVERSE CLUTCH - ASSEMBLY	21-312
LOW/REVERSE CLUTCH - CLEANING	21-312
LOW/REVERSE CLUTCH - DISASSEMBLY	21-311
LOW/REVERSE CLUTCH - INSPECTION	21-312
LUBRICANT RECOMMENDATION - STANDARD PROCEDURES, PARTS	0-1
LUBRICANTS, SPECIFICATIONS - BODY	23-4
LUBRICATION - DESCRIPTION	9-126,9-50
LUBRICATION - DIAGNOSIS AND TESTING, SERVICE DIAGNOSIS	9-68
LUBRICATION - OPERATION	9-127,9-50
LUBRICATION - STANDARD PROCEDURES, BODY	23-3
LUGGAGE RACK - INSTALLATION	23-119
LUGGAGE RACK - REMOVAL	23-119
LUMBAR ADJUSTER - DIAGNOSIS & TESTING, POWER	8N-25
LUMBAR CONTROL SWITCH - DESCRIPTION	8N-23
LUMBAR CONTROL SWITCH - INSTALLATION	8N-24
LUMBAR CONTROL SWITCH - OPERATION	8N-23
LUMBAR CONTROL SWITCH - REMOVAL	8N-23
LUMBAR MOTOR - DESCRIPTION	8N-24
LUMBAR MOTOR - OPERATION	8N-24
LUMBAR SWITCH - DIAGNOSIS & TESTING, POWER	8N-23
MACHINING - STANDARD PROCEDURES, DISC ROTOR	5-27
MAIN BEARING - FITTING - STANDARD PROCEDURE, CRANKSHAFT	9-114
MAIN BEARINGS - INSPECTION, CRANKSHAFT	9-114,9-39
MAIN BEARINGS - INSTALLATION, CRANKSHAFT	9-40
MAIN BEARINGS - REMOVAL, CRANKSHAFT	9-39
MAIN BEARINGS - STANDARD PROCEDURE, FITTING CRANKSHAFT	9-36
MAINTENANCE SCHEDULES - DESCRIPTION	0-6
MAINTENANCE SCHEDULES - MAINTENANCE SCHEDULES	0-7
MAINTENANCE SCHEDULES - UNSCHEDULED INSPECTION	0-7
MAINTENANCE SCHEDULES, MAINTENANCE SCHEDULES	0-7
MALFUNCTION INDICATOR LAMP (MIL) - DESCRIPTION	8J-22
MALFUNCTION INDICATOR LAMP (MIL) - OPERATION	8J-22
MANAGER - DESCRIPTION, TASK	25-16
MANAGER - OPERATION, TASK	25-19
MANIFOLD - CLEANING, INTAKE	9-136
MANIFOLD - DESCRIPTION, EXHAUST	9-59
MANIFOLD - DESCRIPTION, INTAKE	9-135,9-57
MANIFOLD - INSPECTION, INTAKE	9-137
MANIFOLD - INSTALLATION, EXHAUST	9-59
MANIFOLD - INSTALLATION, INTAKE	9-137,9-58
MANIFOLD - LEFT - CLEANING, EXHAUST	9-138
MANIFOLD - LEFT - DESCRIPTION, EXHAUST	9-137
MANIFOLD - LEFT - INSPECTION, EXHAUST	9-138
MANIFOLD - LEFT - INSTALLATION, EXHAUST	9-138
MANIFOLD - LEFT - REMOVAL, EXHAUST	9-138
MANIFOLD - REMOVAL, EXHAUST	9-59
MANIFOLD - REMOVAL, INTAKE	9-136,9-57
MANIFOLD - RIGHT - CLEANING, EXHAUST	9-139
MANIFOLD - RIGHT - DESCRIPTION, EXHAUST	9-138
MANIFOLD - RIGHT - INSPECTION, EXHAUST	9-139
MANIFOLD - RIGHT - INSTALLATION, EXHAUST	9-139
MANIFOLD - RIGHT - REMOVAL, EXHAUST	9-138
MANIFOLD LEAKAGE - DIAGNOSIS AND TESTING, INTAKE	9-136
MANIFOLD LEAKAGE DIAGNOSIS - DIAGNOSIS AND TESTING, INTAKE	9-57
MANUAL BLEEDING - STANDARD PROCEDURE	5-4
MAP SENSOR - DESCRIPTION	14-42
MAP SENSOR - OPERATION	14-42
MASTER CYLINDER - DESCRIPTION	5-21
MASTER CYLINDER - INSTALLATION	5-23
MASTER CYLINDER - OPERATION	5-21
MASTER CYLINDER - REMOVAL	5-23
MASTER CYLINDER/POWER BOOSTER - DIAGNOSIS AND TESTING	5-21
MATCH MOUNTING - STANDARD PROCEDURE	22-2
MEASUREMENTS, SPECIFICATIONS - BODY GAP AND FLUSH	23-87
MEASURING TIMING CHAIN WEAR - STANDARD PROCEDURE	9-143
MECHANICAL - DIAGNOSIS AND TESTING, SERVICE DIAGNOSIS	9-67
MECHANISM - DESCRIPTION, BRAKE TRANSMISSION SHIFT INTERLOCK	21-127, 21-289
MECHANISM - DESCRIPTION, SHIFT	21-188, 21-324
MECHANISM - INSTALLATION, BRAKE TRANSMISSION SHIFT INTERLOCK	21-128, 21-291
MECHANISM - INSTALLATION, REAR HEADREST FOLDING	23-178
MECHANISM - INSTALLATION, SHIFT	21-189, 21-326
MECHANISM - OPERATION, BRAKE TRANSMISSION SHIFT INTERLOCK	21-127, 21-289
MECHANISM - OPERATION, SHIFT	21-188, 21-324
MECHANISM - REMOVAL, BRAKE TRANSMISSION SHIFT INTERLOCK	21-128, 21-290

Description	Group-Page
MECHANISM - REMOVAL, REAR HEADREST FOLDING	23-178
MECHANISM - REMOVAL, SHIFT	21-188,21-325
MEMORY HEATED SEAT/MIRROR MODULE - DESCRIPTION	8E-14
MEMORY HEATED SEAT/MIRROR MODULE - INSTALLATION	8E-15
MEMORY HEATED SEAT/MIRROR MODULE - OPERATION	8E-14
MEMORY HEATED SEAT/MIRROR MODULE - REMOVAL	8E-15
MEMORY SET SWITCH - DESCRIPTION	8N-25
MEMORY SET SWITCH - INSTALLATION	8N-26
MEMORY SET SWITCH - OPERATION	8N-25
MEMORY SET SWITCH - REMOVAL	8N-26
MEMORY SWITCH - DIAGNOSIS & TESTING	8N-25
MEMORY SYSTEM - DESCRIPTION	8N-18
MEMORY SYSTEM - DIAGNOSIS & TESTING	8N-19
MEMORY SYSTEM - OPERATION	8N-19
METRIC SYSTEM - DESCRIPTION	Intro.-5
MIRROR - DESCRIPTION, OUTSIDE REAR VIEW	8N-11
MIRROR - DESCRIPTION, REAR VIEW	8N-11
MIRROR - DESCRIPTION, SIDEVIEW	8N-14
MIRROR - DIAGNOSIS AND TESTING, AUTOMATIC DAY / NIGHT	8N-12
MIRROR - DIAGNOSIS AND TESTING, SIDEVIEW	8N-14
MIRROR - INSTALLATION, AUTOMATIC DAY / NIGHT	8N-13
MIRROR - INSTALLATION, REAR VIEW	23-168
MIRROR - INSTALLATION, SIDE VIEW	23-120
MIRROR - INSTALLATION, SIDEVIEW	8N-16
MIRROR - OPERATION, OUTSIDE REAR VIEW	8N-12
MIRROR - OPERATION, REAR VIEW	8N-12
MIRROR - OPERATION, SIDEVIEW	8N-14
MIRROR - REMOVAL, AUTOMATIC DAY / NIGHT	8N-13
MIRROR - REMOVAL, REAR VIEW	23-168
MIRROR - REMOVAL, SIDE VIEW	23-120
MIRROR - REMOVAL, SIDEVIEW	8N-16
MIRROR GLASS - INSTALLATION, SIDE VIEW	23-120
MIRROR GLASS - REMOVAL, SIDE VIEW	23-119
MIRROR SUPPORT BRACKET - INSTALLATION, REARVIEW	23-168
MIRROR SWITCH - DESCRIPTION, POWER	8N-13
MIRROR SWITCH - OPERATION, POWER	8N-14
MIRRORS - DESCRIPTION, HEATED	8G-1
MIRRORS - DESCRIPTION, POWER	8N-10
MIRRORS - DIAGNOSIS AND TESTING, HEATED	8G-1
MIRRORS - DIAGNOSIS AND TESTING, POWER	8N-11
MIRRORS - INSPECTION	30-14
MIRRORS - OPERATION, HEATED	8G-1
MIRRORS - OPERATION, POWER	8N-11
MODE - DESCRIPTION, STATE DISPLAY TEST	25-1
MODE - OPERATION, CIRCUIT ACTUATION TEST	25-2
MODE DOOR ACTUATOR - DESCRIPTION	24-31
MODES OF OPERATION, POWERTRAIN CONTROL MODULE	8E-16
MODULE - 4.0L - DESCRIPTION, PWM FAN CONTROL	7-40
MODULE - 4.0L - INSTALLATION, PWM FAN CONTROL	7-42
MODULE - 4.0L - OPERATION, PWM FAN CONTROL	7-40
MODULE - 4.0L - REMOVAL, PWM FAN CONTROL	7-41
MODULE - DESCRIPTION, AIRBAG CONTROL	8O-6
MODULE - DESCRIPTION, BODY CONTROL/CENTRAL TIMER	8E-2
MODULE - DESCRIPTION, DAYTIME RUNNING LAMP	8L-10
MODULE - DESCRIPTION, DOOR	8E-10
MODULE - DESCRIPTION, FRONT WIPER	8R-15
MODULE - DESCRIPTION, FUEL PUMP	14-13
MODULE - DESCRIPTION, MEMORY HEATED SEAT/MIRROR	8E-14
MODULE - DESCRIPTION, REAR WIPER	8R-42
MODULE - DESCRIPTION, REMOTE KEYLESS ENTRY	8N-9
MODULE - DESCRIPTION, SENTRY KEY IMMOBILIZER	8E-21
MODULE - DESCRIPTION, TRANSMISSION CONTROL	8E-23
MODULE - DIAGNOSIS & TESTING, HEATED SEAT	8E-14
MODULE - DIAGNOSIS AND TESTING, BODY CONTROL	8E-6
MODULE - DIAGNOSIS AND TESTING, DOOR	8E-12
MODULE - INSTALLATION, AIRBAG CONTROL	8O-8
MODULE - INSTALLATION, BODY CONTROL/CENTRAL TIMER	8E-7
MODULE - INSTALLATION, DAYTIME RUNNING LAMP	8L-10
MODULE - INSTALLATION, DOOR	8E-13
MODULE - INSTALLATION, FRONT WIPER	8R-16
MODULE - INSTALLATION, FUEL PUMP	14-13
MODULE - INSTALLATION, HEADLAMP MOUNTING	23-118
MODULE - INSTALLATION, MEMORY HEATED SEAT/MIRROR	8E-15
MODULE - INSTALLATION, POWERTRAIN CONTROL	8E-21
MODULE - INSTALLATION, REAR WIPER	8R-44
MODULE - INSTALLATION, SENTRY KEY IMMOBILIZER	8E-23
MODULE - MODES OF OPERATION, POWERTRAIN CONTROL	8E-16
MODULE - OPERATION, AIRBAG CONTROL	8O-6
MODULE - OPERATION, BODY CONTROL/CENTRAL TIMER	8E-4
MODULE - OPERATION, DAYTIME RUNNING LAMP	8L-10
MODULE - OPERATION, DOOR	8E-11
MODULE - OPERATION, FRONT WIPER	8R-15
MODULE - OPERATION, FUEL PUMP	14-13
MODULE - OPERATION, MEMORY HEATED SEAT/MIRROR	8E-14
MODULE - OPERATION, REAR WIPER	8R-43
MODULE - OPERATION, REMOTE KEYLESS ENTRY	8N-9
MODULE - OPERATION, SENTRY KEY IMMOBILIZER	8E-21
MODULE - OPERATION, TRANSMISSION CONTROL	8E-23
MODULE - REMOVAL, AIRBAG CONTROL	8O-7
MODULE - REMOVAL, BODY CONTROL/ CENTRAL TIMER	8E-6
MODULE - REMOVAL, DAYTIME RUNNING LAMP	8L-10
MODULE - REMOVAL, DOOR	8E-13
MODULE - REMOVAL, FRONT WIPER	8R-16
MODULE - REMOVAL, FUEL PUMP	14-13
MODULE - REMOVAL, HEADLAMP MOUNTING	23-118
MODULE - REMOVAL, MEMORY HEATED SEAT/MIRROR	8E-15
MODULE - REMOVAL, POWERTRAIN CONTROL	8E-20
MODULE - REMOVAL, REAR WIPER	8R-43
MODULE - REMOVAL, SENTRY KEY IMMOBILIZER	8E-22
MOLEX - INSTALLATION, CONNECTOR	8W-9
MOLEX - REMOVAL, CONNECTOR	8W-9
MONITORED SYSTEMS - OPERATION	25-16
MONITORS - OPERATION, COMPONENT	25-18
MOTOR - DESCRIPTION, BLOWER	24-37
MOTOR - DESCRIPTION, IDLE AIR CONTROL	14-40
MOTOR - DESCRIPTION, LUMBAR	8N-24
MOTOR - DESCRIPTION, POWER LOCK	8N-7
MOTOR - DESCRIPTION, RECLINER	8N-29
MOTOR - DESCRIPTION, STARTER	8F-39
MOTOR - DESCRIPTION, WINDOW	8N-37
MOTOR - DIAGNOSIS AND TESTING, BLOWER	24-37
MOTOR - DIAGNOSIS AND TESTING, POWER LOCK	8N-7
MOTOR - DIAGNOSIS AND TESTING, STARTER	8F-40
MOTOR - DIAGNOSIS AND TESTING, WINDOW	8N-37
MOTOR - INSTALLATION, BLOWER	24-38
MOTOR - INSTALLATION, STARTER	8F-41
MOTOR - INSTALLATION, WINDOW	8N-38
MOTOR - OPERATION, BLOWER	24-37
MOTOR - OPERATION, IDLE AIR CONTROL	14-40
MOTOR - OPERATION, LUMBAR	8N-24
MOTOR - OPERATION, POWER LOCK	8N-7
MOTOR - OPERATION, RECLINER	8N-29
MOTOR - OPERATION, STARTER	8F-39
MOTOR - OPERATION, WINDOW	8N-37
MOTOR - REMOVAL, BLOWER	24-38
MOTOR - REMOVAL, STARTER	8F-40
MOTOR - REMOVAL, WINDOW	8N-38
MOTOR CONTROLLER - DESCRIPTION, BLOWER	24-27
MOTOR CONTROLLER - INSTALLATION, BLOWER	24-27
MOTOR CONTROLLER - OPERATION, BLOWER	24-27
MOTOR CONTROLLER - REMOVAL, BLOWER	24-27
MOTOR, GAS POWERED - STARTER	8F-39
MOTOR RELAY - DESCRIPTION, STARTER	8F-42
MOTOR RELAY - INSTALLATION, STARTER	8F-44
MOTOR RELAY - OPERATION, STARTER	8F-42
MOTOR RELAY - REMOVAL, STARTER	8F-43
MOTOR RESISTOR BLOCK - DESCRIPTION, BLOWER	24-28
MOTOR RESISTOR BLOCK - DIAGNOSIS AND TESTING, BLOWER	24-28
MOTOR RESISTOR BLOCK - INSTALLATION, BLOWER	24-28
MOTOR RESISTOR BLOCK - OPERATION, BLOWER	24-28
MOTOR RESISTOR BLOCK - REMOVAL, BLOWER	24-28
MOTOR SWITCH - DESCRIPTION, BLOWER	24-29
MOTOR SWITCH - OPERATION, BLOWER	24-29
MOTOR SWITCH - REMOVAL, BLOWER	24-29
MOTOR SWITCH-MANUAL TEMPERATURE CONTROL SYSTEM - DIAGNOSIS AND TESTING, BLOWER	24-29
MOUNT - INSTALLATION, FRONT	9-124
MOUNT - INSTALLATION, REAR	9-125
MOUNT - REMOVAL, FRONT	9-124
MOUNT - REMOVAL, REAR	9-124
MOUNTING - STANDARD PROCEDURE, MATCH	22-2
MOUNTING HOUSING - INSTALLATION, MULTI-FUNCTION SWITCH	8L-27
MOUNTING HOUSING - REMOVAL, MULTI-FUNCTION SWITCH	8L-25
MOUNTING MODULE - INSTALLATION, HEADLAMP	23-118
MOUNTING MODULE - REMOVAL, HEADLAMP	23-118
MUFFLER - DESCRIPTION	11-12
MUFFLER - INSTALLATION	11-13
MUFFLER - REMOVAL	11-12
MULTI-FUNCTION SWITCH - DESCRIPTION, LEFT	8L-21
MULTI-FUNCTION SWITCH - DESCRIPTION, RIGHT	8R-17
MULTI-FUNCTION SWITCH - DIAGNOSIS AND TESTING, LEFT	8L-23
MULTI-FUNCTION SWITCH - DIAGNOSIS AND TESTING, RIGHT	8R-18
MULTI-FUNCTION SWITCH - INSTALLATION, LEFT	8L-26
MULTI-FUNCTION SWITCH - INSTALLATION, RIGHT	8R-20
MULTI-FUNCTION SWITCH - OPERATION, LEFT	8L-22
MULTI-FUNCTION SWITCH - OPERATION, RIGHT	8R-18
MULTI-FUNCTION SWITCH - REMOVAL, LEFT	8L-25
MULTI-FUNCTION SWITCH - REMOVAL, RIGHT	8R-19
MULTI-FUNCTION SWITCH MOUNTING HOUSING - INSTALLATION	8L-27
MULTI-FUNCTION SWITCH MOUNTING HOUSING - REMOVAL	8L-25

Description	Group-Page
NAME PLATES - INSTALLATION, EXTERIOR	23-115
NAME PLATES - REMOVAL, EXTERIOR	23-115
NEUTRAL SAFETY SWITCH - INSPECTION	30-14
NEW VEHICLE PREPARATION - DESCRIPTION, THE IMPORTANCE OF CAREFUL	30-1
NEW VEHICLE PREPARATION FORM, FINAL STEPS	30-17
NIGHT MIRROR - DIAGNOSIS AND TESTING, AUTOMATIC DAY	8N-12
NIGHT MIRROR - INSTALLATION, AUTOMATIC DAY	8N-13
NIGHT MIRROR - REMOVAL, AUTOMATIC DAY	8N-13
NOISE - DIAGNOSIS AND TESTING, COMPRESSOR	24-57
NOISE - DIAGNOSIS AND TESTING, WIND	23-2
NOISE - INSPECTION, SQUEAKS, RATTLES AND WIND	30-12
NOISE DIAGNOSIS - DIAGNOSIS AND TESTING, HYDRAULIC LASH ADJUSTER	9-83,9-97
NOISE OR VIBRATION - DIAGNOSIS AND TESTING, TIRE	22-7
NOISE SUPPRESSION GROUND STRAP - DESCRIPTION, RADIO	8A-16
NON-DEPLOYED AIRBAGS - STANDARD PROCEDURE, HANDLING OF	8O-4
NON-MONITORED CIRCUITS - DESCRIPTION	25-19
NOZZLE - DESCRIPTION, FRONT WASHER	8R-10
NOZZLE - DESCRIPTION, REAR WASHER	8R-37
NOZZLE - INSTALLATION, FRONT WASHER	8R-11
NOZZLE - INSTALLATION, REAR WASHER	8R-38
NOZZLE - OPERATION, FRONT WASHER	8R-10
NOZZLE - OPERATION, REAR WASHER	8R-37
NOZZLE - REMOVAL, FRONT WASHER	8R-10
NOZZLE - REMOVAL, REAR WASHER	8R-37
NUMBER - DESCRIPTION, VEHICLE IDENTIFICATION	Intro.-9
NV242 - ASSEMBLY, TRANSFER CASE	21-18
NV242 - CLEANING, TRANSFER CASE	21-13
NV242 - DESCRIPTION, TRANSFER CASE	0-4
NV242 - DESCRIPTION, TRANSFER CASE	21-1
NV242 - DIAGNOSIS AND TESTING, TRANSFER CASE	21-2
NV242 - DISASSEMBLY, TRANSFER CASE	21-3
NV242 - INSPECTION, TRANSFER CASE	21-14
NV242 - INSTALLATION, TRANSFER CASE	21-31
NV242 - OPERATION, TRANSFER CASE	21-2
NV242 - REMOVAL, TRANSFER CASE	21-3
NV242 - TRANSFER CASE	21-32,21-33
NV242HD - INSTALLATION, REAR RETAINER BUSHING AND SEAL	21-36
NV242HD - REMOVAL, REAR RETAINER BUSHING AND SEAL	21-35
NV247 - ASSEMBLY, TRANSFER CASE	21-48
NV247 - CLEANING, TRANSFER CASE	21-47
NV247 - DESCRIPTION, TRANSFER CASE	0-4
NV247 - DESCRIPTION, TRANSFER CASE	21-38
NV247 - DIAGNOSIS AND TESTING, TRANSFER CASE	21-39
NV247 - DISASSEMBLY, TRANSFER CASE	21-40
NV247 - INSPECTION, TRANSFER CASE	21-47
NV247 - INSTALLATION, TRANSFER CASE	21-58
NV247 - OPERATION, TRANSFER CASE	21-38
NV247 - REMOVAL, TRANSFER CASE	21-40
NV247 - TRANSFER CASE	21-59,21-60
O2S HEATER RELAY - DESCRIPTION	14-44
O2S HEATER RELAY - INSTALLATION	14-44
O2S HEATER RELAY - OPERATION	14-44
O2S HEATER RELAY - REMOVAL	14-44
O2S SENSOR - DESCRIPTION	14-44
O2S SENSOR - INSTALLATION	14-46
O2S SENSOR - OPERATION	14-45
O2S SENSOR - REMOVAL	14-46
ODOMETER - DESCRIPTION	8J-23
ODOMETER - OPERATION	8J-23
OFF INDICATOR - DESCRIPTION, OVERDRIVE	8J-24
OFF INDICATOR - OPERATION, OVERDRIVE	8J-25
OFF SWITCH - DESCRIPTION, OVERDRIVE	21-153
OFF SWITCH - OPERATION, OVERDRIVE	21-153
OIL - DESCRIPTION, ENGINE	0-3
OIL - DESCRIPTION, REFRIGERANT	24-70
OIL - OPERATION, REFRIGERANT	24-70
OIL - STANDARD PROCEDURE, ENGINE	9-129
OIL COOLER FLOW - DIAGNOSIS AND TESTING, TRANS	7-55
OIL FILTER - INSTALLATION	9-131,9-54
OIL FILTER - REMOVAL	9-131,9-54
OIL, FLUID TYPES - ENGINE	0-2
OIL GALLERY PLUGS - STANDARD PROCEDURE, ENGINE CORE	9-11,9-72
OIL LEAK - DIAGNOSIS AND TESTING, ENGINE	9-51
OIL LEAK INSPECTION - DIAGNOSIS AND TESTING, ENGINE	9-128
OIL LEVEL - STANDARD PROCEDURE, REFRIGERANT	24-71
OIL PAN - CLEANING	9-132
OIL PAN - DESCRIPTION	9-131,9-54
OIL PAN - INSPECTION	9-132
OIL PAN - INSTALLATION	9-132,9-55
OIL PAN - REMOVAL	9-131,9-54
OIL PRESSURE - DIAGNOSIS AND TESTING, ENGINE	9-127,9-51
OIL PRESSURE GAUGE - DESCRIPTION	8J-24
OIL PRESSURE GAUGE - OPERATION	8J-24
OIL PRESSURE SENSOR - DESCRIPTION, ENGINE	9-56
OIL PRESSURE SENSOR - OPERATION, ENGINE	9-56
OIL PRESSURE SENSOR/SWITCH - DESCRIPTION	9-132
OIL PRESSURE SENSOR/SWITCH - INSTALLATION	9-133
OIL PRESSURE SENSOR/SWITCH - OPERATION	9-132
OIL PRESSURE SENSOR/SWITCH - REMOVAL	9-132
OIL PUMP - ASSEMBLE	9-135
OIL PUMP - ASSEMBLY	21-150,21-316
OIL PUMP - CLEANING	9-133
OIL PUMP - CLEANING	21-150,21-315
OIL PUMP - DESCRIPTION	21-147,21-313
OIL PUMP - DISASSEMBLE	9-133
OIL PUMP - DISASSEMBLY	21-148,21-315
OIL PUMP - INSPECTION	9-133
OIL PUMP - INSPECTION	21-150,21-315
OIL PUMP - INSTALLATION	9-135,9-57
OIL PUMP - OPERATION	21-147,21-315
OIL PUMP - REMOVAL	9-133,9-56
OIL PUMP FRONT SEAL - INSTALLATION	21-318
OIL PUMP FRONT SEAL - REMOVAL	21-318
OIL PUMP VOLUME CHECK - STANDARD PROCEDURES	21-147,21-315
OIL SEAL - FRONT - INSTALLATION, CRANKSHAFT	9-115,9-41
OIL SEAL - FRONT - REMOVAL, CRANKSHAFT	9-115,9-41
OIL SEAL - REAR - INSTALLATION, CRANKSHAFT	9-116,9-42
OIL SEAL - REAR - REMOVAL, CRANKSHAFT	9-116,9-42
OIL SERVICE - STANDARD PROCEDURE, ENGINE	9-53
ON-BOARD DIAGNOSTICS (OBD) - DIAGNOSIS AND TESTING	7-4
ON/OFF RELAY - DESCRIPTION, WIPER	8R-27
ON/OFF RELAY - DIAGNOSIS AND TESTING, WIPER	8R-28
ON/OFF RELAY - INSTALLATION, WIPER	8R-30
ON/OFF RELAY - OPERATION, WIPER	8R-28
ON/OFF RELAY - REMOVAL, WIPER	8R-29
OPEN-CIRCUIT VOLTAGE TEST - STANDARD PROCEDURE	8F-14
OPENER - DIAGNOSIS & TESTING, UNIVERSAL GARAGE DOOR	8M-10
OPENING COVER - INSTALLATION, STEERING COLUMN	23-157
OPENING COVER - REMOVAL, STEERING COLUMN	23-156
OPENING DIMENSIONS, SPECIFICATIONS - BODY	23-89
OPENING TRIM PANEL - INSTALLATION, LOWER LIFTGATE	23-98
OPENING TRIM PANEL - REMOVAL, LOWER LIFTGATE	23-98
OPENING UPPER TRIM - INSTALLATION, LIFTGATE	23-167
OPENING UPPER TRIM - REMOVAL, LIFTGATE	23-167
OPENING WEATHERSTRIP - INSTALLATION, LIFTGATE	23-190
OPENING WEATHERSTRIP - REMOVAL, LIFTGATE	23-190
OPERATION - 4.0L - STANDARD PROCEDURES, INITIAL	19-37
OPERATION - 4.7L - STANDARD PROCEDURES, INITIAL	19-37
OPERATION - DIAGNOSIS AND TESTING, AIR CHECKING TRANSMISSION CLUTCH	21-246
OPERATION - DIAGNOSIS AND TESTING, AIR CHECKING TRANSMISSION CLUTCH AND BAND	21-77
OPERATION, 4.0L	14-15,14-36
OPERATION, 4.0L	8I-4
OPERATION, 4.0L	19-35
OPERATION, 4.0L CCV SYSTEM	25-24
OPERATION, 4.7L	14-15,14-36
OPERATION, 4.7L	8I-5
OPERATION, 4.7L	19-35
OPERATION, 4.7L PCV SYSTEM	25-25
OPERATION, 5 VOLT SUPPLIES	8E-19
OPERATION, ABS INDICATOR	8J-12
OPERATION, A/C COMPRESSOR	24-57
OPERATION, A/C COMPRESSOR CLUTCH	24-13
OPERATION, A/C COMPRESSOR CLUTCH RELAY	24-16
OPERATION, A/C CONDENSER	24-59
OPERATION, A/C EVAPORATOR	24-63
OPERATION, A/C HEATER CONTROL	24-17
OPERATION, A/C HIGH PRESSURE SWITCH	24-25
OPERATION, A/C LOW PRESSURE SWITCH	24-26
OPERATION, A/C ORIFICE TUBE	24-68
OPERATION, ACCUMULATOR	24-65
OPERATION, ACCUMULATOR	21-124
OPERATION, AIRBAG CONTROL MODULE	8O-6
OPERATION, AIRBAG INDICATOR	8J-13
OPERATION, AMBIENT TEMPERATURE SENSOR	8M-10
OPERATION, AMPLIFIER	8A-5
OPERATION, ANTENNA BODY & CABLE	8A-7
OPERATION, ASD SENSE - PCM INPUT	8I-3
OPERATION, AUDIO	8A-2
OPERATION, AUTOMATIC TRANSMISSION - 42RE	21-68
OPERATION, AUTOMATIC TRANSMISSION - 545RFE	21-243
OPERATION, AUTOMATIC TRANSMISSION FLUID	0-4
OPERATION, BANDS	21-125
OPERATION, BATTERY	8F-8
OPERATION, BATTERY CABLE	8F-21
OPERATION, BATTERY HOLDDOWN	8F-19
OPERATION, BATTERY SYSTEM	8F-2
OPERATION, BATTERY TEMPERATURE SENSOR	8F-30
OPERATION, BATTERY TRAY	8F-25
OPERATION, BLOWER MOTOR	24-37
OPERATION, BLOWER MOTOR CONTROLLER	24-27
OPERATION, BLOWER MOTOR RESISTOR BLOCK	24-28
OPERATION, BLOWER MOTOR SWITCH	24-29
OPERATION, BODY	23-1
OPERATION, BODY CONTROL/CENTRAL TIMER MODULE	8E-4
OPERATION, BRAKE LAMP SWITCH	8L-5
OPERATION, BRAKE TRANSMISSION SHIFT INTERLOCK MECHANISM	21-127,21-289
OPERATION, BRAKE/PARK BRAKE INDICATOR	8J-14
OPERATION, BRAKES - ABS	5-36
OPERATION, BUMPERS	13-1
OPERATION, CABLE	8P-3
OPERATION, CD CHANGER	8A-11

Description	Group-Page
OPERATION, CHARGING	8F-28
OPERATION, CHECK GAUGES INDICATOR	8J-16
OPERATION, CHIME WARNING SYSTEM	8B-2
OPERATION, CIGAR LIGHTER OUTLET	8W-2
OPERATION, CIRCUIT ACTUATION TEST MODE	25-2
OPERATION, CLOCKSPRING	8O-9
OPERATION, COIL RAIL	8I-9
OPERATION, COMBINATION FLASHER	8L-8
OPERATION, COMMUNICATION	8E-8
OPERATION, COMPONENT MONITORS	25-18
OPERATION, CONTROLLER ANTILOCK BRAKE	8E-9
OPERATION, COOLANT	7-26
OPERATION, COOLING SYSTEM	7-4
OPERATION, CRUISE INDICATOR	8J-17
OPERATION, DAMPER	19-32
OPERATION, DATA LINK CONNECTOR	8E-10
OPERATION, DAYTIME RUNNING LAMP MODULE	8L-10
OPERATION, DOOR AJAR SWITCH	8L-33
OPERATION, DOOR CYLINDER LOCK / UNLOCK SWITCH	8N-7
OPERATION, DOOR MODULE	8E-11
OPERATION, DRAG LINK	19-33
OPERATION, DRIVER AIRBAG	8O-14
OPERATION, DRIVER DOOR AJAR SWITCH	8L-33
OPERATION, DRIVER HEATED SEAT SWITCH	8G-5
OPERATION, DRIVER SEAT SWITCH	8N-20
OPERATION, ELECTRIC BRAKE	5-38
OPERATION, ELECTRONIC GOVERNOR	21-132
OPERATION, ELECTRONIC VEHICLE INFO CENTER	8M-8
OPERATION, ENGINE BLOCK HEATER	7-33
OPERATION, ENGINE COOLANT TEMP SENSOR	7-35
OPERATION, ENGINE COOLANT THERMOSTAT	7-36
OPERATION, ENGINE OIL PRESSURE SENSOR	9-56
OPERATION, ENGINE TEMPERATURE GAUGE	8J-18
OPERATION, FAN DRIVE VISCOUS CLUTCH - 4.0L	7-40
OPERATION, FLIP UP GLASS AJAR SWITCH	8L-33
OPERATION, FRONT AXLE - 186FBI	3-16
OPERATION, FRONT CHECK VALVE	8R-8
OPERATION, FRONT CLUTCH	21-139
OPERATION, FRONT DISC BRAKE SHOES	5-9
OPERATION, FRONT FOG LAMPS INDICATOR	8J-19
OPERATION, FRONT POWER OUTLET	8W-13
OPERATION, FRONT SERVO	21-143
OPERATION, FRONT WASHER HOSES/TUBES	8R-10
OPERATION, FRONT WASHER NOZZLE	8R-10
OPERATION, FRONT WASHER PUMP/MOTOR	8R-11
OPERATION, FRONT WHEEL SPEED SENSOR	5-38
OPERATION, FRONT WIPER ARM	8R-13
OPERATION, FRONT WIPER BLADE	8R-14
OPERATION, FRONT WIPER MODULE	8R-15
OPERATION, FRONT WIPERS/WASHERS	8R-3
OPERATION, FUEL DELIVERY	14-2
OPERATION, FUEL FILLER CAP	25-28
OPERATION, FUEL FILTER/PRESSURE REGULATOR	14-6
OPERATION, FUEL GAUGE	8J-19
OPERATION, FUEL INJECTOR	14-38
OPERATION, FUEL LEVEL SENDING UNIT / SENSOR	14-7
OPERATION, FUEL PUMP	14-9
OPERATION, FUEL PUMP MODULE	14-13
OPERATION, FUEL PUMP RELAY	14-40
OPERATION, FUEL TANK	14-19
OPERATION, GEAR	19-15
OPERATION, GENERATOR	8F-30
OPERATION, G-SWITCH	5-39
OPERATION, HCU (HYDRAULIC CONTROL UNIT)	5-41
OPERATION, HEADLAMP	8L-12
OPERATION, HEADLAMP SWITCH	8L-17
OPERATION, HEATED MIRRORS	8G-1
OPERATION, HEATED SEAT ELEMENT	8G-7
OPERATION, HEATED SEAT SYSTEM	8G-4
OPERATION, HEATER AND AIR CONDITIONER	24-1
OPERATION, HEATER CORE	24-68
OPERATION, HIGH AND LOW LIMITS	25-19
OPERATION, HIGH BEAM INDICATOR	8J-20
OPERATION, HIGH PRESSURE RELIEF VALVE	24-57
OPERATION, HOLDING CLUTCHES	21-298
OPERATION, HOOD AJAR SWITCH	8Q-9
OPERATION, HORN	8H-3
OPERATION, HORN RELAY	8H-5
OPERATION, HORN SWITCH	8H-6
OPERATION, HORN SYSTEM	8H-2
OPERATION, HOSE CLAMPS	7-4
OPERATION, HUB / BEARING	2-8
OPERATION, IDLE AIR CONTROL MOTOR	14-40
OPERATION, IGNITION CIRCUIT SENSE	8E-19
OPERATION, IGNITION COIL	8I-10
OPERATION, IGNITION COIL CAPACITOR	8I-12
OPERATION, IGNITION CONTROL	8I-1
OPERATION, IGNITION-OFF DRAW FUSE	8W-3
OPERATION, IGNITION-OFF DRAW WIRE HARNESS CONNECTOR	8W-18
OPERATION, IN-CAR TEMPERATURE SENSOR	24-30
OPERATION, INPUT CLUTCH ASSEMBLY	21-300
OPERATION, INPUT SPEED SENSOR	21-309
OPERATION, INSTRUMENT CLUSTER	8J-3
OPERATION, INSTRUMENT PANEL SYSTEM	23-127
OPERATION, INTAKE AIR TEMPERATURE SENSOR	14-41
OPERATION, JOUNCE BUMPER	2-17,2-9
OPERATION, JUNCTION BLOCK	8W-5
OPERATION, KEY-IN IGNITION SWITCH	19-12
OPERATION, KNUCKLE	2-9
OPERATION, LEFT MULTI-FUNCTION SWITCH	8L-22
OPERATION, LIFTGATE AJAR SWITCH	8L-33
OPERATION, LIFTGATE FLIP-UP GLASS POWER RELEASE SYSTEM	8N-5
OPERATION, LINE PRESSURE (LP) SENSOR	21-310
OPERATION, LOW COOLANT INDICATOR	8J-21
OPERATION, LOW FUEL INDICATOR	8J-21
OPERATION, LOWER CONTROL ARM	2-10,2-18
OPERATION, LUBRICATION	9-127,9-50
OPERATION, LUMBAR CONTROL SWITCH	8N-23
OPERATION, LUMBAR MOTOR	8N-24
OPERATION, MALFUNCTION INDICATOR LAMP (MIL)	8J-22
OPERATION, MAP SENSOR	14-42
OPERATION, MASTER CYLINDER	5-21
OPERATION, MEMORY HEATED SEAT/MIRROR MODULE	8E-14
OPERATION, MEMORY SET SWITCH	8N-25
OPERATION, MEMORY SYSTEM	8N-19
OPERATION, MONITORED SYSTEMS	25-16
OPERATION, O2S HEATER RELAY	14-44
OPERATION, O2S SENSOR	14-45
OPERATION, ODOMETER	8J-23
OPERATION, OIL PRESSURE GAUGE	8J-24
OPERATION, OIL PRESSURE SENSOR/ SWITCH	9-132
OPERATION, OIL PUMP	21-147,21-315
OPERATION, OUTPUT SPEED SENSOR	21-319
OPERATION, OUTSIDE REAR VIEW MIRROR	8N-12
OPERATION, OVERDRIVE CLUTCH	21-152
OPERATION, OVERDRIVE OFF INDICATOR	8J-25
OPERATION, OVERDRIVE OFF SWITCH	21-153
OPERATION, OVERDRIVE SWITCH	21-319
OPERATION, OVERHEAD CONSOLE	8M-1
OPERATION, OVERRUNNING CLUTCH CAM/OVERDRIVE PISTON RETAINER	21-172
OPERATION, PARKING BRAKE	5-28
OPERATION, PASSENGER AIRBAG	8O-20
OPERATION, PASSENGER HEATED SEAT SWITCH	8G-10
OPERATION, PASSENGER SEAT SWITCH	8N-26
OPERATION, PCM	8E-18
OPERATION, PCM OUTPUT	14-39
OPERATION, PCM OUTPUT	8I-3
OPERATION, PEDAL	5-23
OPERATION, PISTONS	21-176,21-320
OPERATION, PITMAN ARM	19-33
OPERATION, PLANETARY GEARTRAIN	21-322
OPERATION, PLANETARY GEARTRAIN/ OUTPUT SHAFT	21-177
OPERATION, POWER BRAKE BOOSTER	5-24
OPERATION, POWER DISTRIBUTION CENTER	8W-8
OPERATION, POWER DISTRIBUTION SYSTEM	8W-1
OPERATION, POWER LOCK MOTOR	8N-7
OPERATION, POWER LOCK SWITCH	8N-9
OPERATION, POWER LOCK SYSTEM	8N-4
OPERATION, POWER MIRROR SWITCH	8N-14
OPERATION, POWER MIRRORS	8N-11
OPERATION, POWER OUTLET RELAY	8W-16
OPERATION, POWER SEAT SYSTEM	8N-18
OPERATION, POWER SEAT TRACK	8N-31
OPERATION, POWER STEERING SYSTEM	19-1
OPERATION, POWER STEERING/ RADIATOR COOLING FAN FLUID FILTER	19-36
OPERATION, POWER WINDOW SWITCH	8N-35
OPERATION, POWER WINDOWS	8N-33
OPERATION, POWERTRAIN CONTROL MODULE - MODES OF	8E-16
OPERATION, PRESSURE LINE	19-40
OPERATION, PROGRAMMABLE ELECTRONIC FEATURES	30-15
OPERATION, PROPELLER SHAFT	3-1
OPERATION, PWM FAN CONTROL MODULE - 4.0L	7-40
OPERATION, RADIATOR FAN - 4.7L	7-28
OPERATION, RADIATOR PRESSURE CAP	7-53
OPERATION, RADIO	8A-14
OPERATION, READING LAMP	8L-35
OPERATION, REAR AXLE - 198RBI	3-49
OPERATION, REAR AXLE - 226RBA	3-87
OPERATION, REAR CLUTCH	21-183
OPERATION, REAR DISC BRAKE SHOES	5-9
OPERATION, REAR FOG LAMPS INDICATOR	8J-25
OPERATION, REAR POWER OUTLET	8W-13
OPERATION, REAR SERVO	21-187
OPERATION, REAR VIEW MIRROR	8N-12
OPERATION, REAR WASHER HOSES/ TUBES	8R-36
OPERATION, REAR WASHER NOZZLE	8R-37
OPERATION, REAR WASHER PUMP/ MOTOR	8R-38
OPERATION, REAR WHEEL SPEED SENSOR	5-40
OPERATION, REAR WINDOW DEFOGGER	8G-13
OPERATION, REAR WINDOW DEFOGGER GRID	8G-15
OPERATION, REAR WINDOW DEFOGGER RELAY	8G-17
OPERATION, REAR WINDOW DEFOGGER SWITCH	8G-19
OPERATION, REAR WIPER ARM	8R-39
OPERATION, REAR WIPER BLADE	8R-41
OPERATION, REAR WIPER MODULE	8R-43
OPERATION, REAR WIPERS/WASHERS	8R-32
OPERATION, RECLINER MOTOR	8N-29
OPERATION, RED BRAKE WARN INDICATOR SWITCH	5-7
OPERATION, REFRIGERANT	24-70
OPERATION, REFRIGERANT LINE	24-51
OPERATION, REFRIGERANT OIL	24-70
OPERATION, REFRIGERANT SYSTEM SERVICE PORT	24-2
OPERATION, REMOTE KEYLESS ENTRY MODULE	8N-9
OPERATION, REMOTE KEYLESS ENTRY SYSTEM	8N-4
OPERATION, REMOTE KEYLESS ENTRY TRANSMITTER	8N-8
OPERATION, REMOTE SWITCHES	8A-18
OPERATION, RESTRAINTS	8O-2
OPERATION, RETURN LINE	19-41
OPERATION, RIGHT MULTI-FUNCTION SWITCH	8R-18
OPERATION, ROCKER ARM / ADJUSTER ASSEMBLY	9-26
OPERATION, ROLLOVER VALVE	14-25
OPERATION, SEAT BELT SWITCH	8O-25
OPERATION, SEATBELT INDICATOR	8J-26
OPERATION, SEATS	23-172
OPERATION, SENTRY KEY IMMOBILIZER MODULE	8E-21

Description	Group-Page
OPERATION, SENTRY KEY IMMOBILIZER SYSTEM	8Q-4
OPERATION, SERVO	8P-5
OPERATION, SHIFT INDICATOR (TRANSFER CASE)	8J-27
OPERATION, SHIFT MECHANISM	21-188,21-324
OPERATION, SHOCK	2-11,2-18
OPERATION, SIDEVIEW MIRROR	8N-14
OPERATION, SKIS INDICATOR LAMP	8Q-11
OPERATION, SOLENOID	21-190
OPERATION, SOLENOID SWITCH VALVE	21-326
OPERATION, SOLENOIDS	21-327
OPERATION, SPARK PLUG	8I-13
OPERATION, SPEAKER	8A-20
OPERATION, SPEED CONTROL	8P-1
OPERATION, SPEED SENSOR	21-191
OPERATION, SPEEDOMETER	8J-28
OPERATION, SPRING	2-12,2-19
OPERATION, STABILIZER BAR	2-13,2-20
OPERATION, STARTER MOTOR	8F-39
OPERATION, STARTER MOTOR RELAY	8F-42
OPERATION, STARTING	8F-34
OPERATION, STATIONARY GLASS	23-182
OPERATION, STRUCTURAL COVER	9-123
OPERATION, SWITCH	8P-6
OPERATION, TACHOMETER	8J-29
OPERATION, TAIL LAMP	8L-28
OPERATION, TAILPIPE	11-13
OPERATION, TASK MANAGER	25-19
OPERATION, THERMAL GUARD	8F-26
OPERATION, THROTTLE BODY	14-48
OPERATION, THROTTLE POSITION SENSOR	14-51
OPERATION, TIE ROD END	19-34
OPERATION, TIMING DRIVE SYSTEM	9-141
OPERATION, TORQUE CONVERTER	21-197, 21-331
OPERATION, TORQUE CONVERTER DRAINBACK VALVE	21-198
OPERATION, TRACK BAR	2-13
OPERATION, TRANS OVERTEMP INDICATOR	8J-30
OPERATION, TRANSFER CASE - NV242	21-2
OPERATION, TRANSFER CASE - NV247	21-38
OPERATION, TRANSMISSION CONTROL MODULE	8E-23
OPERATION, TRANSMISSION CONTROL RELAY	21-333
OPERATION, TRANSMISSION RANGE SENSOR	21-333
OPERATION, TRANSMISSION SOLENOID/ TRS ASSEMBLY	21-334
OPERATION, TRANSMISSION TEMPERATURE SENSOR	21-199,21-335
OPERATION, TRANSPONDER KEY	8Q-12
OPERATION, TURN SIGNAL & HAZARD WARNING SYSTEM	8L-3
OPERATION, TURN SIGNAL CANCEL CAM	8L-29
OPERATION, TURN SIGNAL INDICATORS	8J-30
OPERATION, UNIVERSAL TRANSMITTER	8M-10
OPERATION, UPPER CONTROL ARM	2-15,2-21
OPERATION, UPPER SUSPENSION ARM, BUSHINGS, AND BALL JOINT	2-20
OPERATION, VACUUM CHECK VALVE	24-34
OPERATION, VACUUM RESERVOIR	24-35
OPERATION, VACUUM RESERVOIR	8P-7
OPERATION, VALVE BODY	21-204,21-335
OPERATION, VEHICLE THEFT SECURITY SYSTEM	8Q-3
OPERATION, VOLTAGE GAUGE	8J-31
OPERATION, VOLTAGE REGULATOR	8F-32
OPERATION, VTSS INDICATOR	8Q-13
OPERATION, WAIT-TO-START INDICATOR	8J-32
OPERATION, WASHER FLUID LEVEL SWITCH	8R-21
OPERATION, WASHER RESERVOIR	8R-23
OPERATION, WATER PUMP	7-47
OPERATION, WATER PUMP BYPASS	7-48
OPERATION, WATER-IN-FUEL INDICATOR	8J-33
OPERATION, WHEEL ALIGNMENT	2-3
OPERATION, WINDOW MOTOR	8N-37
OPERATION, WIPER HIGH/LOW RELAY	8R-25
OPERATION, WIPER ON/OFF RELAY	8R-28
ORDER, 4.0L 6-CYLINDER ENGINE - ENGINE FIRING	8I-2
ORDER, 4.7L V-8 ENGINE - ENGINE FIRING	8I-2
ORIFICE FITTING - INSTALLATION, FIXED	25-27
ORIFICE FITTING - REMOVAL, FIXED	25-26
ORIFICE TUBE - DESCRIPTION, A/C	24-67
ORIFICE TUBE - OPERATION, A/C	24-68
ORIFICE TUBE - REMOVAL, A/C	24-68
OTHER - INSPECTION	30-12
OUT, FINAL STEPS - OWNER CHECK	30-17
OUTER BELT WEATHERSTRIP - INSTALLATION, FRONT DOOR	23-188
OUTER BELT WEATHERSTRIP - INSTALLATION, REAR DOOR	23-190
OUTER BELT WEATHERSTRIP - REMOVAL, FRONT DOOR	23-188
OUTER BELT WEATHERSTRIP - REMOVAL, REAR DOOR	23-190
OUTLET - DESCRIPTION, CIGAR LIGHTER	8W-2
OUTLET - DESCRIPTION, FRONT POWER	8W-12
OUTLET - DESCRIPTION, REAR POWER	8W-13
OUTLET - DIAGNOSIS & TESTING, CIGAR LIGHTER	8W-2
OUTLET - DIAGNOSIS & TESTING, FRONT POWER	8W-13
OUTLET - DIAGNOSIS & TESTING, REAR POWER	8W-13
OUTLET - INSTALLATION, FRONT POWER	8W-15
OUTLET - INSTALLATION, REAR POWER	8W-16
OUTLET - OPERATION, CIGAR LIGHTER	8W-2
OUTLET - OPERATION, FRONT POWER	8W-13
OUTLET - OPERATION, REAR POWER	8W-13
OUTLET - REMOVAL, FRONT POWER	8W-14
OUTLET - REMOVAL, REAR POWER	8W-14
OUTLET DOOR - INSTALLATION, PANEL	24-49
OUTLET DOOR - INSTALLATION, POWER	23-156
OUTLET DOOR - REMOVAL, PANEL	24-46
OUTLET DOOR - REMOVAL, POWER	23-155
OUTLET DOOR SPRING - INSTALLATION, CIGAR LIGHTER	8W-3
OUTLET DOOR SPRING - REMOVAL, CIGAR LIGHTER	8W-3
OUTLET RELAY - DESCRIPTION, POWER	8W-16
OUTLET RELAY - DIAGNOSIS & TESTING, POWER	8W-16
OUTLET RELAY - INSTALLATION, POWER	8W-17
OUTLET RELAY - OPERATION, POWER	8W-16
OUTLET RELAY - REMOVAL, POWER	8W-17
OUTLETS - INSTALLATION, AIR	24-36
OUTLETS - REMOVAL, AIR	24-36
OUTPUT - OPERATION, PCM	14-39
OUTPUT - OPERATION, PCM	8I-3
OUTPUT SHAFT FRONT BEARING - INSTALLATION	21-152
OUTPUT SHAFT FRONT BEARING - REMOVAL	21-151
OUTPUT SHAFT REAR BEARING - INSTALLATION	21-152
OUTPUT SHAFT REAR BEARING - REMOVAL	21-152
OUTPUT SHAFT SEAL - INSTALLATION, FRONT	21-35,21-61
OUTPUT SHAFT SEAL - REMOVAL, FRONT	21-35,21-61
OUTPUT SPEED SENSOR - DESCRIPTION	21-319
OUTPUT SPEED SENSOR - INSTALLATION	21-319
OUTPUT SPEED SENSOR - OPERATION	21-319
OUTPUT SPEED SENSOR - REMOVAL	21-319
OUTSIDE REAR VIEW MIRROR - DESCRIPTION	8N-11
OUTSIDE REAR VIEW MIRROR - OPERATION	8N-12
OVERDRIVE CLUTCH - DESCRIPTION	21-152
OVERDRIVE CLUTCH - OPERATION	21-152
OVERDRIVE ELECTRICAL CONTROLS - DIAGNOSIS AND TESTING	21-153
OVERDRIVE OFF INDICATOR - DESCRIPTION	8J-24
OVERDRIVE OFF INDICATOR - OPERATION	8J-25
OVERDRIVE OFF SWITCH - DESCRIPTION	21-153
OVERDRIVE OFF SWITCH - OPERATION	21-153
OVERDRIVE SWITCH - DESCRIPTION	21-319
OVERDRIVE SWITCH - OPERATION	21-319
OVERDRIVE UNIT - ASSEMBLY	21-162
OVERDRIVE UNIT - CLEANING	21-161
OVERDRIVE UNIT - DISASSEMBLY	21-154
OVERDRIVE UNIT - INSPECTION	21-161
OVERDRIVE UNIT - INSTALLATION	21-171
OVERDRIVE UNIT - REMOVAL	21-153
OVERHEAD CONSOLE - DESCRIPTION	8M-1
OVERHEAD CONSOLE - INSTALLATION	8M-5
OVERHEAD CONSOLE - OPERATION	8M-1
OVERHEAD CONSOLE - REMOVAL	8M-5
OVERHEAD CONSOLE SYSTEMS, SPECIAL TOOLS	8M-6
OVERRUNNING CLUTCH CAM/ OVERDRIVE PISTON RETAINER - ASSEMBLY	21-173
OVERRUNNING CLUTCH CAM/ OVERDRIVE PISTON RETAINER - CLEANING	21-173
OVERRUNNING CLUTCH CAM/ OVERDRIVE PISTON RETAINER - DESCRIPTION	21-172
OVERRUNNING CLUTCH CAM/ OVERDRIVE PISTON RETAINER - DISASSEMBLY	21-172
OVERRUNNING CLUTCH CAM/ OVERDRIVE PISTON RETAINER - INSPECTION	21-173
OVERRUNNING CLUTCH CAM/ OVERDRIVE PISTON RETAINER - OPERATION	21-172
OVERTEMP INDICATOR - DESCRIPTION, TRANS	8J-29
OVERTEMP INDICATOR - OPERATION, TRANS	8J-30
OWNER CHECK OUT, FINAL STEPS	30-17
PAD - INSTALLATION, INSTRUMENT PANEL TOP	23-143
PAD - REMOVAL, INSTRUMENT PANEL TOP	23-141
PAINT CODE - DESCRIPTION	23-170
PAINT COLOR CODES, SPECIFICATIONS - 2001 WJ	23-170
PAINT TOUCH-UP - DESCRIPTION	23-170
PAN - CLEANING, OIL	9-132
PAN - DESCRIPTION, OIL	9-131,9-54
PAN - INSPECTION, OIL	9-132
PAN - INSTALLATION, OIL	9-132,9-55
PAN - REMOVAL, OIL	9-131,9-54
PANEL - INSTALLATION, FENDER/ QUARTER	23-114
PANEL - INSTALLATION, LIFTGATE TRIM	23-98
PANEL - INSTALLATION, LOWER LIFTGATE OPENING TRIM	23-98
PANEL - INSTALLATION, QUARTER TRIM	23-168
PANEL - INSTALLATION, TRIM	23-105,23-111
PANEL - REMOVAL, FENDER/QUARTER	23-113
PANEL - REMOVAL, LIFTGATE TRIM	23-97
PANEL - REMOVAL, LOWER LIFTGATE OPENING TRIM	23-98
PANEL - REMOVAL, QUARTER TRIM	23-168
PANEL - REMOVAL, TRIM	23-104,23-111
PANEL ANTENNA CABLE - INSTALLATION, INSTRUMENT	8A-13
PANEL ANTENNA CABLE - REMOVAL, INSTRUMENT	8A-13
PANEL C-CHANNEL COVER BRACKET - INSTALLATION, INSTRUMENT	23-145
PANEL C-CHANNEL COVER BRACKET - REMOVAL, INSTRUMENT	23-145
PANEL CENTER BEZEL - LOWER - INSTALLATION, INSTRUMENT	23-146
PANEL CENTER BEZEL - LOWER - REMOVAL, INSTRUMENT	23-146
PANEL CENTER BEZEL - UPPER - INSTALLATION, INSTRUMENT	23-147
PANEL CENTER BEZEL - UPPER - REMOVAL, INSTRUMENT	23-147
PANEL CENTER FLOOR TUNNEL BRACKET - INSTALLATION, INSTRUMENT	23-148
PANEL CENTER FLOOR TUNNEL BRACKET - REMOVAL, INSTRUMENT	23-147
PANEL COURTESY LAMP BRACKET - INSTALLATION, INSTRUMENT	23-149
PANEL COURTESY LAMP BRACKET - REMOVAL, INSTRUMENT	23-148
PANEL DUCTS - INSTALLATION, INSTRUMENT	24-39
PANEL DUCTS - REMOVAL, INSTRUMENT	24-39

Description	Group-Page
PANEL END CAP - INSTALLATION, INSTRUMENT	23-140
PANEL END CAP - REMOVAL, INSTRUMENT	23-139
PANEL INTERMEDIATE BRACKET - INSTALLATION, INSTRUMENT	23-150
PANEL INTERMEDIATE BRACKET - REMOVAL, INSTRUMENT	23-149
PANEL LOWER RIGHT CENTER BEZEL - INSTALLATION, INSTRUMENT	23-150
PANEL LOWER RIGHT CENTER BEZEL - REMOVAL, INSTRUMENT	23-150
PANEL OUTLET DOOR - INSTALLATION	24-49
PANEL OUTLET DOOR - REMOVAL	24-46
PANEL PLENUM BRACKET - INSTALLATION, INSTRUMENT	23-152
PANEL PLENUM BRACKET - REMOVAL, INSTRUMENT	23-151
PANEL SPEAKER - INSTALLATION, INSTRUMENT	8A-23
PANEL SPEAKER, SPEAKER - INSTRUMENT	8A-22
PANEL STEERING COLUMN BRACKET - INSTALLATION, INSTRUMENT	23-152
PANEL STEERING COLUMN BRACKET - REMOVAL, INSTRUMENT	23-152
PANEL STEERING COLUMN SUPPORT BRACKET - INSTALLATION, INSTRUMENT	23-153
PANEL STEERING COLUMN SUPPORT BRACKET - REMOVAL, INSTRUMENT	23-153
PANEL STUCTURAL DUCT - INSTALLATION, INSTRUMENT	23-140
PANEL STUCTURAL DUCT - REMOVAL, INSTRUMENT	23-140
PANEL SYSTEM - DESCRIPTION, INSTRUMENT	23-124
PANEL SYSTEM - INSTALLATION, INSTRUMENT	23-133
PANEL SYSTEM - OPERATION, INSTRUMENT	23-127
PANEL SYSTEM - REMOVAL, INSTRUMENT	23-127
PANEL TOP COVER - INSTALLATION, INSTRUMENT	23-141
PANEL TOP COVER - REMOVAL, INSTRUMENT	23-141
PANEL TOP PAD - INSTALLATION, INSTRUMENT	23-143
PANEL TOP PAD - REMOVAL, INSTRUMENT	23-141
PANEL TRIM BEZEL - DRIVER - INSTALLATION, INTRUMENT	23-154
PANEL TRIM BEZEL - DRIVER - REMOVAL, INTRUMENT	23-154
PANEL TRIM BEZEL - PASSENGER - INSTALLATION, INSTRUMENT	23-155
PANEL TRIM BEZEL - PASSENGER - REMOVAL, INSTRUMENT	23-155
PANEL/DEFROST DOOR - INSTALLATION	24-49
PANEL/DEFROST DOOR - REMOVAL	24-48
PANEL/DEFROST DOOR ELECTRIC ACTUATOR - INSTALLATION, HEAT/DEFROST	24-32
PANEL/DEFROST DOOR ELECTRIC ACTUATOR - REMOVAL, HEAT/ DEFROST	24-31
PANEL/DEFROST DOOR VACUUM ACTUATOR - INSTALLATION	24-33
PANEL/DEFROST DOOR VACUUM ACTUATOR - REMOVAL	24-32
PARK RAMP - INSTALLATION, WIPER ARM	8R-44
PARK RAMP - REMOVAL, WIPER ARM	8R-44
PARKING BRAKE - DIAGNOSIS AND TESTING	5-29
PARKING BRAKE - INSPECTION	30-12
PARKING BRAKE - OPERATION	5-28
PARKING BRAKE CABLE - INSTALLATION, FRONT	5-31
PARKING BRAKE CABLE - REMOVAL, FRONT	5-29
PARKING BRAKE CABLES - INSTALLATION, REAR	5-32
PARKING BRAKE CABLES - REMOVAL, REAR	5-30
PARKING BRAKE SHOE - ADJUSTMENTS	5-35
PARK/NEUTRAL POSITION SWITCH - DIAGNOSIS AND TESTING	21-175
PARK/NEUTRAL POSITION SWITCH - INSTALLATION	21-175
PARK/NEUTRAL POSITION SWITCH - REMOVAL	21-175
PART TIME INDICATOR - DIAGNOSIS AND TESTING	8J-27
PARTS & LUBRICANT RECOMMENDATION - STANDARD PROCEDURES	0-1
PASSENGER - INSTALLATION, INSTRUMENT PANEL TRIM BEZEL	23-155
PASSENGER - REMOVAL, INSTRUMENT PANEL TRIM BEZEL	23-155
PASSENGER AIRBAG - DESCRIPTION	8O-20
PASSENGER AIRBAG - INSTALLATION	8O-21
PASSENGER AIRBAG - OPERATION	8O-20
PASSENGER AIRBAG - REMOVAL	8O-21
PASSENGER HEATED SEAT SWITCH - DESCRIPTION	8G-10
PASSENGER HEATED SEAT SWITCH - INSTALLATION	8G-12
PASSENGER HEATED SEAT SWITCH - OPERATION	8G-10
PASSENGER HEATED SEAT SWITCH - REMOVAL	8G-11
PASSENGER SEAT SWITCH - DESCRIPTION	8N-26
PASSENGER SEAT SWITCH - INSTALLATION	8N-28
PASSENGER SEAT SWITCH - OPERATION	8N-26
PASSENGER SEAT SWITCH - REMOVAL	8N-28
PATTERNS - DIAGNOSIS AND TESTING, TIRE WEAR	22-7
PCM - DESCRIPTION	8E-15
PCM - OPERATION	8E-18
PCM INPUT - OPERATION, ASD SENSE	8I-3
PCM OUTPUT - OPERATION	14-39
PCM OUTPUT - OPERATION	8I-3
PCM/SKIM PROGRAMMING - STANDARD PROCEDURE	8E-1
PCV SYSTEM - DESCRIPTION	25-24
PCV SYSTEM - OPERATION, 4.7L	25-25
PCV VALVE - 4.7L - INSTALLATION	25-32
PCV VALVE - 4.7L - REMOVAL	25-31
PCV VALVE/PCV SYSTEM - 4.7L - DIAGNOSIS AND TESTING	25-30
PDC & COMPONENTS ASSEMBLY, POWER DISTRIBUTION CENTER	8W-11
PDC & COMPONENTS DISASSEMBLY, POWER DISTRIBUTION CENTER	8W-8
PEDAL - DESCRIPTION	5-23
PEDAL - INSTALLATION	5-23
PEDAL - INSTALLATION, ACCELERATOR	14-35
PEDAL - OPERATION	5-23
PEDAL - REMOVAL	5-23
PEDAL - REMOVAL, ACCELERATOR	14-35
PERFORMANCE - DIAGNOSIS AND TESTING, A/C	24-2
PERFORMANCE - DIAGNOSIS AND TESTING, HEATER	24-6
PERFORMANCE - DIAGNOSIS AND TESTING, SERVICE DIAGNOSIS	9-65
PERFORMANCE - INSPECTION, ENGINE	30-12
PINION GEAR/RING GEAR - INSTALLATION	3-122,3-45,3-84
PINION GEAR/RING GEAR - REMOVAL	3-119, 3-44,3-81
PINION SEAL - INSTALLATION	3-108,3-36,3-70
PINION SEAL - REMOVAL	3-107,3-36,3-69
PIPE - 4.0L - INSPECTION, EXHAUST	11-8
PIPE - 4.0L - INSTALLATION, EXHAUST	11-9
PIPE - 4.0L - REMOVAL, EXHAUST	11-8
PIPE - 4.7L - INSPECTION, EXHAUST	11-10
PIPE - 4.7L - INSTALLATION, EXHAUST	11-11
PIPE - 4.7L - REMOVAL, EXHAUST	11-10
PISTON & CONNECTING ROD - CLEANING	9-119
PISTON & CONNECTING ROD - DESCRIPTION	9-117,9-44
PISTON & CONNECTING ROD - INSPECTION	9-119
PISTON & CONNECTING ROD - INSTALLATION	9-119,9-46
PISTON & CONNECTING ROD - REMOVAL	9-118,9-45
PISTON FITTING - STANDARD PROCEDURE	9-117,9-44
PISTON RETAINER - ASSEMBLY, OVERRUNNING CLUTCH CAM/ OVERDRIVE	21-173
PISTON RETAINER - CLEANING, OVERRUNNING CLUTCH CAM/ OVERDRIVE	21-173
PISTON RETAINER - DESCRIPTION, OVERRUNNING CLUTCH CAM/ OVERDRIVE	21-172
PISTON RETAINER - DISASSEMBLY, OVERRUNNING CLUTCH CAM/ OVERDRIVE	21-172
PISTON RETAINER - INSPECTION, OVERRUNNING CLUTCH CAM/ OVERDRIVE	21-173
PISTON RETAINER - OPERATION, OVERRUNNING CLUTCH CAM/ OVERDRIVE	21-172
PISTON RING - FITTING - STANDARD PROCEDURE	9-120
PISTON RING FITTING - STANDARD PROCEDURE	9-47
PISTONS - DESCRIPTION	21-175,21-319
PISTONS - OPERATION	21-176,21-320
PITMAN ARM - DESCRIPTION	19-33
PITMAN ARM - INSTALLATION	19-33
PITMAN ARM - OPERATION	19-33
PITMAN ARM - REMOVAL	19-33
PITMAN BEARING - INSTALLATION	19-21
PITMAN BEARING - REMOVAL	19-20
PITMAN SHAFT - INSTALLATION	19-19
PITMAN SHAFT - REMOVAL	19-18
PITMAN SHAFT SEAL - INSTALLATION	19-24
PITMAN SHAFT SEAL - REMOVAL	19-22
PLANETARY GEARTRAIN - ASSEMBLY	21-323
PLANETARY GEARTRAIN - CLEANING	21-323
PLANETARY GEARTRAIN - DESCRIPTION	21-322
PLANETARY GEARTRAIN - DISASSEMBLY	21-323
PLANETARY GEARTRAIN - INSPECTION	21-323
PLANETARY GEARTRAIN - OPERATION	21-322
PLANETARY GEARTRAIN/OUTPUT SHAFT - ASSEMBLY	21-179
PLANETARY GEARTRAIN/OUTPUT SHAFT - DESCRIPTION	21-177
PLANETARY GEARTRAIN/OUTPUT SHAFT - DISASSEMBLY	21-178
PLANETARY GEARTRAIN/OUTPUT SHAFT - INSPECTION	21-178
PLANETARY GEARTRAIN/OUTPUT SHAFT - OPERATION	21-177
PLATE - DESCRIPTION, BODY CODE	Intro.-1
PLATE - DESCRIPTION, FUEL TANK SKID	13-7
PLATE - INSTALLATION, DOOR SILL SCUFF	23-163
PLATE - INSTALLATION, FLEX	9-117
PLATE - INSTALLATION, FRONT SKID	13-7
PLATE - INSTALLATION, TRANSFER CASE SKID	13-8
PLATE - REMOVAL, DOOR SILL SCUFF	23-163
PLATE - REMOVAL, FLEX	9-116
PLATE - REMOVAL, FRONT SKID	13-7
PLATE - REMOVAL, TRANSFER CASE SKID	13-8
PLATE LAMP UNIT - INSTALLATION, LICENSE	8L-20
PLATE LAMP UNIT - REMOVAL, LICENSE	8L-20
PLATES - INSTALLATION, EXTERIOR NAME	23-115
PLATES - REMOVAL, EXTERIOR NAME	23-115
PLAY - STANDARD PROCEDURE, CRANKSHAFT END	9-110
PLAYER - INSPECTION, RADIO, TAPE PLAYER AND/OR CD	30-13
PLAYER AND/OR CD PLAYER - INSPECTION, RADIO, TAPE	30-13
PLENUM BRACKET - INSTALLATION, INSTRUMENT PANEL	23-152
PLENUM BRACKET - REMOVAL, INSTRUMENT PANEL	23-151
PLUG - CLEANING, SPARK	8I-16
PLUG - DESCRIPTION, SPARK	8I-13
PLUG - INSTALLATION, SPARK	8I-16
PLUG - INSTALLATION, STEERING GEAR HOUSING	19-27
PLUG - OPERATION, SPARK	8I-13

Description	Group-Page
PLUG - REMOVAL, SPARK	8I-16
PLUG - REMOVAL, STEERING GEAR HOUSING	19-27
PLUG CONDITIONS - DIAGNOSIS AND TESTING, SPARK	8I-13
PLUGS - STANDARD PROCEDURE, ENGINE CORE AND OIL GALLERY	9-11,9-72
PLUGS, SPECIFICATIONS - SPARK	8I-3
PLUMBING - REFRIGERANT HOSES/ LINES/TUBES PRECAUTIONS	24-53
POLISHING - DESCRIPTION, WET SANDING/BUFFING	23-171
PORT - DESCRIPTION, REFRIGERANT SYSTEM SERVICE	24-1
PORT - OPERATION, REFRIGERANT SYSTEM SERVICE	24-2
POSITION - STANDARD PROCEDURE, TOE	2-4
POSITION SENSOR - DESCRIPTION, THROTTLE	14-51
POSITION SENSOR - OPERATION, THROTTLE	14-51
POSITION SWITCH - DIAGNOSIS AND TESTING, PARK/NEUTRAL	21-175
POSITION SWITCH - INSTALLATION, PARK/NEUTRAL	21-175
POSITION SWITCH - REMOVAL, PARK/NEUTRAL	21-175
POTENTIAL - STANDARD PROCEDURE, TESTING FOR VOLTAGE	8W-6
POWER BRAKE BOOSTER - DESCRIPTION	5-24
POWER BRAKE BOOSTER - INSTALLATION	5-25
POWER BRAKE BOOSTER - OPERATION	5-24
POWER BRAKE BOOSTER - REMOVAL	5-24
POWER DISTRIBUTION - DESCRIPTION	8W-1
POWER DISTRIBUTION CENTER - DESCRIPTION	8W-7
POWER DISTRIBUTION CENTER - INSTALLATION	8W-12
POWER DISTRIBUTION CENTER - OPERATION	8W-8
POWER DISTRIBUTION CENTER - PDC & COMPONENTS ASSEMBLY	8W-11
POWER DISTRIBUTION CENTER - PDC & COMPONENTS DISASSEMBLY	8W-8
POWER DISTRIBUTION CENTER - REMOVAL	8W-8
POWER DISTRIBUTION SYSTEM - OPERATION	8W-1
POWER DISTRIBUTION SYSTEMS, SPECIAL TOOLS	8W-2
POWER GROUNDS - DESCRIPTION	8E-18
POWER LOCK MOTOR - DESCRIPTION	8N-7
POWER LOCK MOTOR - DIAGNOSIS AND TESTING	8N-7
POWER LOCK MOTOR - OPERATION	8N-7
POWER LOCK SWITCH - DESCRIPTION	8N-9
POWER LOCK SWITCH - OPERATION	8N-9
POWER LOCK SYSTEM - DESCRIPTION	8N-1
POWER LOCK SYSTEM - DIAGNOSIS AND TESTING	8N-5
POWER LOCK SYSTEM - OPERATION	8N-4
POWER LUMBAR ADJUSTER - DIAGNOSIS & TESTING	8N-25
POWER LUMBAR SWITCH - DIAGNOSIS & TESTING	8N-23
POWER MIRROR SWITCH - DESCRIPTION	8N-13
POWER MIRROR SWITCH - OPERATION	8N-14
POWER MIRRORS - DESCRIPTION	8N-10
POWER MIRRORS - DIAGNOSIS AND TESTING	8N-11
POWER MIRRORS - OPERATION	8N-11
POWER OUTLET - DESCRIPTION, FRONT	8W-12
POWER OUTLET - DESCRIPTION, REAR	8W-13
POWER OUTLET - DIAGNOSIS & TESTING, FRONT	8W-13
POWER OUTLET - DIAGNOSIS & TESTING, REAR	8W-13
POWER OUTLET - INSTALLATION, FRONT	8W-15
POWER OUTLET - INSTALLATION, REAR	8W-16
POWER OUTLET - OPERATION, FRONT	8W-13
POWER OUTLET - OPERATION, REAR	8W-13
POWER OUTLET - REMOVAL, FRONT	8W-14
POWER OUTLET - REMOVAL, REAR	8W-14
POWER OUTLET DOOR - INSTALLATION	23-156
POWER OUTLET DOOR - REMOVAL	23-155
POWER OUTLET RELAY - DESCRIPTION	8W-16
POWER OUTLET RELAY - DIAGNOSIS & TESTING	8W-16
POWER OUTLET RELAY - INSTALLATION	8W-17
POWER OUTLET RELAY - OPERATION	8W-16
POWER OUTLET RELAY - REMOVAL	8W-17
POWER RELEASE SYSTEM - DESCRIPTION, LIFTGATE FLIP-UP GLASS	8N-4
POWER RELEASE SYSTEM - DIAGNOSIS AND TESTING, LIFTGATE FLIP-UP GLASS	8N-6
POWER RELEASE SYSTEM - OPERATION, LIFTGATE FLIP-UP GLASS	8N-5
POWER SEAT RECLINER - DIAGNOSIS & TESTING	8N-29
POWER SEAT SYSTEM - DIAGNOSIS & TESTING	8N-19
POWER SEAT SYSTEM - OPERATION	8N-18
POWER SEAT TRACK - DESCRIPTION	8N-30
POWER SEAT TRACK - DIAGNOSIS & TESTING	8N-31
POWER SEAT TRACK - OPERATION	8N-31
POWER SEATS - DESCRIPTION	8N-17
POWER STEERING GEAR, SPECIAL TOOLS	19-18
POWER STEERING GEAR, SPECIFICATIONS	19-17
POWER STEERING PUMP, SPECIAL TOOLS	19-39
POWER STEERING SYSTEM - DESCRIPTION	19-1
POWER STEERING SYSTEM - OPERATION	19-1
POWER STEERING SYSTEM DIAGNOSIS CHARTS - DIAGNOSIS AND TESTING	19-2
POWER STEERING/RADIATOR COOLING FAN FLUID FILTER - DESCRIPTION	19-35
POWER STEERING/RADIATOR COOLING FAN FLUID FILTER - OPERATION	19-36
POWER WINDOW SWITCH - DESCRIPTION	8N-35
POWER WINDOW SWITCH - DIAGNOSIS AND TESTING	8N-36
POWER WINDOW SWITCH - INSTALLATION	8N-36
POWER WINDOW SWITCH - OPERATION	8N-35
POWER WINDOW SWITCH - REMOVAL	8N-36
POWER WINDOWS - DESCRIPTION	8N-32
POWER WINDOWS - DIAGNOSIS AND TESTING	8N-33
POWER WINDOWS - OPERATION	8N-33
POWERED - GENERATOR RATINGS, GAS	8F-29
POWERED - STARTER MOTOR, GAS	8F-39
POWERED - TORQUE, GAS	8F-29
POWERING SEVERAL LOADS - STANDARD PROCEDURE, TESTING FOR SHORT TO GROUND ON FUSES	8W-7
POWERTRAIN CONTROL MODULE - INSTALLATION	8E-21
POWERTRAIN CONTROL MODULE - MODES OF OPERATION	8E-16
POWERTRAIN CONTROL MODULE - REMOVAL	8E-20
PRE DELIVERY STORAGE - DESCRIPTION	30-14
PRE DELIVERY STORAGE - STANDARD PROCEDURE	30-15
PRECAUTIONS, PLUMBING - REFRIGERANT HOSES/LINES/TUBES	24-53
PRELIMINARY - DIAGNOSIS AND TESTING	21-71
PRELIMINARY CHECKS - DIAGNOSIS AND TESTING	7-4
PRELIMINARY DIAGNOSIS - DIAGNOSIS AND TESTING	21-244
PREPARATION - DESCRIPTION, THE IMPORTANCE OF CAREFUL NEW VEHICLE	30-1
PREPARATION - STANDARD PROCEDURES, ENGINE GASKET SURFACE	9-71
PREPARATION FORM, FINAL STEPS - NEW VEHICLE	30-17
PRESS CONTAINER - DESCRIPTION, COOLANT RECOVERY	7-27
PRESSURE - DIAGNOSIS AND TESTING, CYLINDER COMPRESSION	9-8
PRESSURE - DIAGNOSIS AND TESTING, ENGINE OIL	9-127,9-51
PRESSURE - DIAGNOSIS AND TESTING, STEERING FLOW	19-4
PRESSURE BLEEDING - STANDARD PROCEDURE	5-5
PRESSURE CAP - CLEANING, RADIATOR	7-53
PRESSURE CAP - DESCRIPTION, RADIATOR	7-52
PRESSURE CAP - DIAGNOSIS AND TESTING, RADIATOR	7-53
PRESSURE CAP - INSPECTION, RADIATOR	7-53
PRESSURE CAP - OPERATION, RADIATOR	7-53
PRESSURE FOR HIGH SPEED - DESCRIPTION, TIRE	22-6
PRESSURE GAUGE - DESCRIPTION, OIL	8J-24
PRESSURE GAUGE - OPERATION, OIL	8J-24
PRESSURE GAUGES - DIAGNOSIS AND TESTING	22-7
PRESSURE LEAK DOWN TEST - DIAGNOSIS AND TESTING, FUEL	14-2
PRESSURE LEAKAGE - DIAGNOSIS AND TESTING, CYLINDER COMBUSTION	9-70,9-8
PRESSURE LINE - DESCRIPTION	19-40
PRESSURE LINE - OPERATION	19-40
PRESSURE (LP) SENSOR - DESCRIPTION, LINE	21-310
PRESSURE (LP) SENSOR - INSTALLATION, LINE	21-310
PRESSURE (LP) SENSOR - OPERATION, LINE	21-310
PRESSURE (LP) SENSOR - REMOVAL, LINE	21-310
PRESSURE RELEASE - STANDARD PROCEDURE, FUEL SYSTEM	14-3
PRESSURE RELIEF VALVE - DESCRIPTION, HIGH	24-57
PRESSURE RELIEF VALVE - OPERATION, HIGH	24-57
PRESSURE SENSOR - DESCRIPTION, ENGINE OIL	9-56
PRESSURE SENSOR - OPERATION, ENGINE OIL	9-56
PRESSURE SENSOR/SWITCH - DESCRIPTION, OIL	9-132
PRESSURE SENSOR/SWITCH - INSTALLATION, OIL	9-133
PRESSURE SENSOR/SWITCH - OPERATION, OIL	9-132
PRESSURE SENSOR/SWITCH - REMOVAL, OIL	9-132
PRESSURE, SPECIFICATIONS - FUEL SYSTEM	14-4
PRESSURE SWITCH - DESCRIPTION, A/C HIGH	24-25
PRESSURE SWITCH - DESCRIPTION, A/C LOW	24-26
PRESSURE SWITCH - DIAGNOSIS AND TESTING, A/C HIGH	24-25
PRESSURE SWITCH - DIAGNOSIS AND TESTING, A/C LOW	24-26
PRESSURE SWITCH - INSTALLATION, A/C HIGH	24-25
PRESSURE SWITCH - INSTALLATION, A/C LOW	24-26
PRESSURE SWITCH - OPERATION, A/C HIGH	24-25
PRESSURE SWITCH - OPERATION, A/C LOW	24-26
PRESSURE SWITCH - REMOVAL, A/C HIGH	24-25
PRESSURE SWITCH - REMOVAL, A/C LOW	24-26
PRESSURE TEST - DIAGNOSIS AND TESTING, CYLINDER COMPRESSION	9-69
PRESSURE TEST - DIAGNOSIS AND TESTING, FUEL PUMP	14-11
PRESSURE TEST - DIAGNOSIS AND TESTING, HYDRAULIC	21-245,21-74
PRESSURES - DESCRIPTION, TIRE INFLATION	22-6
PRESSURES - INSPECTION, TIRE	30-7
PROGRAMMABLE ELECTRONIC FEATURES - DESCRIPTION	30-15

Description	Group-Page
PROGRAMMABLE ELECTRONIC FEATURES - OPERATION	30-15
PROGRAMMING - STANDARD PROCEDURE, ELECTRONIC VEHICLE INFORMATION CENTER	8M-2
PROGRAMMING - STANDARD PROCEDURE, PCM/SKIM	8E-1
PROGRAMMING - STANDARD PROCEDURE, RKE TRANSMITTER	8N-8
PROGRAMMING - STANDARD PROCEDURES, SENTRY KEY TRANSPONDER	8Q-7
PROP - INSTALLATION, GAS	23-121
PROP - REMOVAL, GAS	23-121
PROPELLER SHAFT - DESCRIPTION	3-1
PROPELLER SHAFT - DIAGNOSIS AND TESTING	3-2
PROPELLER SHAFT - FRONT - INSTALLATION	3-7
PROPELLER SHAFT - FRONT - REMOVAL	3-7
PROPELLER SHAFT - FRONT 4.7L - INSTALLATION	3-8
PROPELLER SHAFT - FRONT 4.7L - REMOVAL	3-7
PROPELLER SHAFT - OPERATION	3-1
PROPELLER SHAFT - REAR - INSTALLATION	3-9
PROPELLER SHAFT - REAR - REMOVAL	3-8
PROPELLER SHAFT ANGLE - STANDARD PROCEDURES	3-4
PROPELLER SHAFT, SPECIFICATIONS	3-6
PULLEY - INSTALLATION	19-41
PULLEY - REMOVAL	19-41
PUMP - 4.0L - CLEANING, WATER	7-52
PUMP - 4.0L - DESCRIPTION, WATER	7-49
PUMP - 4.0L - INSPECTION, WATER	7-52
PUMP - 4.0L - INSTALLATION, WATER	7-52
PUMP - 4.0L - REMOVAL, WATER	7-50
PUMP - 4.7L - CLEANING, WATER	7-49
PUMP - 4.7L - INSPECTION, WATER	7-49
PUMP - 4.7L - INSTALLATION, WATER	7-49
PUMP - 4.7L - REMOVAL, WATER	7-48
PUMP - ASSEMBLE, OIL	9-135
PUMP - ASSEMBLY, OIL	21-150,21-316
PUMP - CLEANING, OIL	9-133
PUMP - CLEANING, OIL	21-150,21-315
PUMP - DESCRIPTION, FUEL	14-9
PUMP - DESCRIPTION, LEAK DETECTION	25-28
PUMP - DESCRIPTION, OIL	21-147,21-313
PUMP - DESCRIPTION, WATER	7-47
PUMP - DIAGNOSIS AND TESTING, WATER	7-48,7-50
PUMP - DISASSEMBLE, OIL	9-133
PUMP - DISASSEMBLY, OIL	21-148,21-315
PUMP - INSPECTION, OIL	9-133
PUMP - INSPECTION, OIL	21-150,21-315
PUMP - INSTALLATION, LEAK DETECTION	25-30
PUMP - INSTALLATION, OIL	9-135,9-57
PUMP - OPERATION, FUEL	14-9
PUMP - OPERATION, OIL	21-147,21-315
PUMP - OPERATION, WATER	7-47
PUMP - REMOVAL, LEAK DETECTION	25-30
PUMP - REMOVAL, OIL	9-133,9-56
PUMP AMPERAGE TEST - DIAGNOSIS AND TESTING, FUEL	14-9
PUMP BYPASS - DESCRIPTION, WATER	7-47
PUMP BYPASS - OPERATION, WATER	7-48
PUMP CAPACITY TEST - DIAGNOSIS AND TESTING, FUEL	14-9
PUMP FRONT SEAL - INSTALLATION, OIL	21-318
PUMP FRONT SEAL - REMOVAL, OIL	21-318
PUMP INLET TUBE - INSTALLATION, WATER	7-54
PUMP INLET TUBE - REMOVAL, WATER	7-54
PUMP LEAKAGE - DIAGNOSIS AND TESTING	19-37
PUMP MODULE - DESCRIPTION, FUEL	14-13
PUMP MODULE - INSTALLATION, FUEL	14-13
PUMP MODULE - OPERATION, FUEL	14-13
PUMP MODULE - REMOVAL, FUEL	14-13
PUMP PRESSURE TEST - DIAGNOSIS AND TESTING, FUEL	14-11
PUMP RELAY - DESCRIPTION, FUEL	14-39
PUMP RELAY - OPERATION, FUEL	14-40
PUMP, SPECIAL TOOLS - POWER STEERING	19-39
PUMP VOLUME CHECK - STANDARD PROCEDURES, OIL	21-147,21-315
PUMP/MOTOR - DESCRIPTION, FRONT WASHER	8R-11
PUMP/MOTOR - DESCRIPTION, REAR WASHER	8R-38
PUMP/MOTOR - INSTALLATION, FRONT WASHER	8R-12
PUMP/MOTOR - INSTALLATION, REAR WASHER	8R-38
PUMP/MOTOR - OPERATION, FRONT WASHER	8R-11
PUMP/MOTOR - OPERATION, REAR WASHER	8R-38
PUMP/MOTOR - REMOVAL, FRONT WASHER	8R-12
PUMP/MOTOR - REMOVAL, REAR WASHER	8R-38
PWM FAN CONTROL MODULE - 4.0L - DESCRIPTION	7-40
PWM FAN CONTROL MODULE - 4.0L - INSTALLATION	7-42
PWM FAN CONTROL MODULE - 4.0L - OPERATION	7-40
PWM FAN CONTROL MODULE - 4.0L - REMOVAL	7-41
QUARTER TRIM PANEL - INSTALLATION	23-168
QUARTER TRIM PANEL - REMOVAL	23-168
QUARTER WINDOW - INSTALLATION	23-183
QUARTER WINDOW - REMOVAL	23-183
QUICK CONNECT FITTING - DESCRIPTION	14-22
QUICK LEARN - STANDARD PROCEDURES, TCM	8E-26
QUICK-CONNECT FITTINGS - STANDARD PROCEDURES	14-22
RACK - INSTALLATION, LUGGAGE	23-119
RACK - REMOVAL, LUGGAGE	23-119
RADIAL-PLY TIRES - DESCRIPTION	22-6
RADIATOR - 4.0L - CLEANING	7-46
RADIATOR - 4.0L - DESCRIPTION	7-44
RADIATOR - 4.0L - INSPECTION	7-46
RADIATOR - 4.0L - INSTALLATION	7-46
RADIATOR - 4.0L - REMOVAL	7-44
RADIATOR - 4.7L - CLEANING	7-43
RADIATOR - 4.7L - DESCRIPTION	7-42
RADIATOR - 4.7L - INSPECTION	7-44
RADIATOR - 4.7L - INSTALLATION	7-44
RADIATOR - 4.7L - REMOVAL	7-42
RADIATOR FAN - 4.0L - CLEANING	7-32
RADIATOR FAN - 4.0L - DESCRIPTION	7-31
RADIATOR FAN - 4.0L - INSPECTION	7-32
RADIATOR FAN - 4.0L - INSTALLATION	7-32
RADIATOR FAN - 4.0L - REMOVAL	7-31
RADIATOR FAN - 4.7L - CLEANING	7-29
RADIATOR FAN - 4.7L - DESCRIPTION	7-27
RADIATOR FAN - 4.7L - INSTALLATION	7-29
RADIATOR FAN - 4.7L - OPERATION	7-28
RADIATOR FAN - 4.7L - REMOVAL	7-28
RADIATOR PRESSURE CAP - CLEANING	7-53
RADIATOR PRESSURE CAP - DESCRIPTION	7-52
RADIATOR PRESSURE CAP - DIAGNOSIS AND TESTING	7-53
RADIATOR PRESSURE CAP - INSPECTION	7-53
RADIATOR PRESSURE CAP - OPERATION	7-53
RADIO - DESCRIPTION	8A-14
RADIO - DIAGNOSIS AND TESTING	8A-14
RADIO - INSTALLATION	8A-16
RADIO - OPERATION	8A-14
RADIO - REMOVAL	8A-15
RADIO NOISE SUPPRESSION GROUND STRAP - DESCRIPTION	8A-16
RADIO, TAPE PLAYER AND/OR CD PLAYER - INSPECTION	30-13
RAIL - DESCRIPTION, COIL	8I-8
RAIL - INSTALLATION, COIL	8I-10
RAIL - OPERATION, COIL	8I-9
RAIL - REMOVAL, COIL	8I-9
RAIL WEATHERSTRIP / RETAINER - INSTALLATION, ROOF	23-191
RAIL WEATHERSTRIP / RETAINER - REMOVAL, ROOF	23-191
RAMP - INSTALLATION, WIPER ARM PARK	8R-44
RAMP - REMOVAL, WIPER ARM PARK	8R-44
RANGE SENSOR - DESCRIPTION, TRANSMISSION	21-333
RANGE SENSOR - OPERATION, TRANSMISSION	21-333
RATINGS, GAS POWERED - GENERATOR	8F-29
RATTLES AND WIND NOISE - INSPECTION, SQUEAKS	30-12
RE TRANSMISSIONS, SPECIAL TOOLS	21-121
READING LAMP - DESCRIPTION	8L-35
READING LAMP - INSTALLATION	8L-36
READING LAMP - OPERATION	8L-35
READING LAMP - REMOVAL	8L-35
REAR - INSTALLATION, CRANKSHAFT OIL SEAL	9-116,9-42
REAR - INSTALLATION, PROPELLER SHAFT	3-9
REAR - REMOVAL, CRANKSHAFT OIL SEAL	9-116,9-42
REAR - REMOVAL, PROPELLER SHAFT	3-8
REAR ABSORBER - INSTALLATION	13-2
REAR ABSORBER - REMOVAL	13-2
REAR AXLE - 198RBI - ADJUSTMENTS	3-55
REAR AXLE - 198RBI - DESCRIPTION	3-49
REAR AXLE - 198RBI - INSTALLATION	3-55
REAR AXLE - 198RBI - OPERATION	3-49
REAR AXLE - 198RBI - REMOVAL	3-54
REAR AXLE - 226RBA - ADJUSTMENTS	3-93
REAR AXLE - 226RBA - DESCRIPTION	3-87
REAR AXLE - 226RBA - INSTALLATION	3-93
REAR AXLE - 226RBA - OPERATION	3-87
REAR AXLE - 226RBA - REMOVAL	3-92
REAR AXLE, 198RBI	3-64
REAR AXLE, 226RBA	3-102
REAR BEARING - INSTALLATION, OUTPUT SHAFT	21-152
REAR BEARING - REMOVAL, OUTPUT SHAFT	21-152
REAR CLUTCH - ASSEMBLY	21-185
REAR CLUTCH - CLEANING	21-184
REAR CLUTCH - DESCRIPTION	21-183
REAR CLUTCH - DISASSEMBLY	21-184
REAR CLUTCH - INSPECTION	21-185
REAR CLUTCH - OPERATION	21-183
REAR DISC BRAKE CALIPER - ASSEMBLY	5-18
REAR DISC BRAKE CALIPER - DISASSEMBLY	5-16
REAR DISC BRAKE CALIPER - INSTALLATION	5-20
REAR DISC BRAKE CALIPER - REMOVAL	5-14
REAR DISC BRAKE ROTOR - DIAGNOSIS AND TESTING	5-27
REAR DISC BRAKE ROTOR - INSTALLATION	5-28
REAR DISC BRAKE ROTOR - REMOVAL	5-28
REAR DISC BRAKE SHOES - DESCRIPTION	5-8
REAR DISC BRAKE SHOES - INSTALLATION	5-12
REAR DISC BRAKE SHOES - OPERATION	5-9
REAR DISC BRAKE SHOES - REMOVAL	5-10
REAR DOOR - INSTALLATION	23-114
REAR DOOR - REMOVAL	23-113
REAR DOOR INNER BELT WEATHERSTRIP - INSTALLATION	23-190
REAR DOOR INNER BELT WEATHERSTRIP - REMOVAL	23-190
REAR DOOR OUTER BELT WEATHERSTRIP - INSTALLATION	23-190
REAR DOOR OUTER BELT WEATHERSTRIP - REMOVAL	23-190
REAR DOOR SECONDARY WEATHERSTRIP - INSTALLATION	23-191
REAR DOOR SECONDARY WEATHERSTRIP - REMOVAL	23-190
REAR DOOR SPEAKER - INSTALLATION	8A-22
REAR DOOR SPEAKER, SPEAKER	8A-22
REAR DOOR WEATHERSTRIP - INSTALLATION	23-191
REAR DOOR WEATHERSTRIP - REMOVAL	23-191
REAR FASCIA - INSTALLATION	13-4
REAR FASCIA - REMOVAL	13-2
REAR FLOOR HEAT DUCT - INSTALLATION	24-41
REAR FLOOR HEAT DUCT - REMOVAL	24-40
REAR FOG LAMPS INDICATOR - DESCRIPTION	8J-25

Description	Group-Page
REAR FOG LAMPS INDICATOR - OPERATION	8J-25
REAR GLASS HEATING GRID REPAIR - STANDARD PROCEDURE	8G-15
REAR HEADREST - INSTALLATION	23-177
REAR HEADREST - REMOVAL	23-177
REAR HEADREST FOLDING MECHANISM - INSTALLATION	23-178
REAR HEADREST FOLDING MECHANISM - REMOVAL	23-178
REAR HEADREST RELEASE KNOB - INSTALLATION	23-177
REAR HEADREST RELEASE KNOB - REMOVAL	23-177
REAR HEADREST SLEEVE - INSTALLATION	23-178
REAR HEADREST SLEEVE - REMOVAL	23-178
REAR MOUNT - INSTALLATION	9-125
REAR MOUNT - REMOVAL	9-124
REAR PARKING BRAKE CABLES - INSTALLATION	5-32
REAR PARKING BRAKE CABLES - REMOVAL	5-30
REAR POWER OUTLET - DESCRIPTION	8W-13
REAR POWER OUTLET - DIAGNOSIS & TESTING	8W-13
REAR POWER OUTLET - INSTALLATION	8W-16
REAR POWER OUTLET - OPERATION	8W-13
REAR POWER OUTLET - REMOVAL	8W-14
REAR RETAINER BUSHING AND SEAL - INSTALLATION	21-62
REAR RETAINER BUSHING AND SEAL - NV242HD - INSTALLATION	21-36
REAR RETAINER BUSHING AND SEAL - NV242HD - REMOVAL	21-35
REAR RETAINER BUSHING AND SEAL - REMOVAL	21-62
REAR SEAL AREA LEAKS - DIAGNOSIS AND TESTING	9-128,9-9
REAR SEAT BACK - INSTALLATION	23-178
REAR SEAT BACK - REMOVAL	23-178
REAR SEAT BACK COVER - INSTALLATION	23-179
REAR SEAT BACK COVER - REMOVAL	23-179
REAR SEAT BACK LATCH / LOCK - INSTALLATION, FOLDING	23-180
REAR SEAT BACK LATCH / LOCK - REMOVAL, FOLDING	23-180
REAR SEAT BACK LATCH HANDLE - INSTALLATION, FOLDING	23-180
REAR SEAT BACK LATCH HANDLE - REMOVAL, FOLDING	23-180
REAR SEAT BACK LATCH/HINGE - INSTALLATION, FOLDING	23-181
REAR SEAT BACK LATCH/HINGE - REMOVAL, FOLDING	23-181
REAR SEAT BELT & RETRACTOR - INSTALLATION	8O-23
REAR SEAT BELT & RETRACTOR - REMOVAL	8O-22
REAR SEAT BELT BUCKLE - INSTALLATION	8O-24
REAR SEAT BELT BUCKLE - REMOVAL	8O-24
REAR SEAT CUSHION - INSTALLATION	23-179
REAR SEAT CUSHION - REMOVAL	23-179
REAR SEAT CUSHION COVER - INSTALLATION	23-180
REAR SEAT CUSHION COVER - REMOVAL	23-180
REAR SERVO - ASSEMBLY	21-188
REAR SERVO - CLEANING	21-187
REAR SERVO - DESCRIPTION	21-187
REAR SERVO - DISASSEMBLY	21-187
REAR SERVO - OPERATION	21-187
REAR STORAGE BOX - INSTALLATION	23-168
REAR STORAGE BOX - REMOVAL	23-168
REAR SUSPENSION - DESCRIPTION	2-16
REAR SUSPENSION - DIAGNOSISI AND TESTING	2-16
REAR SUSPENSION - WARNING	2-16
REAR SUSPENSION, SPECIAL TOOLS	2-17
REAR TOW HOOK - INSTALLATION	13-7
REAR TOW HOOK - REMOVAL	13-7
REAR VIEW MIRROR - DESCRIPTION	8N-11
REAR VIEW MIRROR - DESCRIPTION, OUTSIDE	8N-11
REAR VIEW MIRROR - INSTALLATION	23-168
REAR VIEW MIRROR - OPERATION	8N-12
REAR VIEW MIRROR - OPERATION, OUTSIDE	8N-12
REAR VIEW MIRROR - REMOVAL	23-168
REAR WASHER HOSES/TUBES - DESCRIPTION	8R-36
REAR WASHER HOSES/TUBES - OPERATION	8R-36
REAR WASHER NOZZLE - DESCRIPTION	8R-37
REAR WASHER NOZZLE - INSTALLATION	8R-38
REAR WASHER NOZZLE - OPERATION	8R-37
REAR WASHER NOZZLE - REMOVAL	8R-37
REAR WASHER PUMP/MOTOR - DESCRIPTION	8R-38
REAR WASHER PUMP/MOTOR - INSTALLATION	8R-38
REAR WASHER PUMP/MOTOR - OPERATION	8R-38
REAR WASHER PUMP/MOTOR - REMOVAL	8R-38
REAR WHEEL SPEED SENSOR - DESCRIPTION	5-40
REAR WHEEL SPEED SENSOR - INSTALLATION	5-41
REAR WHEEL SPEED SENSOR - OPERATION	5-40
REAR WHEEL SPEED SENSOR - REMOVAL	5-40
REAR WINDOW DEFOGGER - DESCRIPTION	8G-13
REAR WINDOW DEFOGGER - OPERATION	8G-13
REAR WINDOW DEFOGGER GRID - DESCRIPTION	8G-15
REAR WINDOW DEFOGGER GRID - DIAGNOSIS AND TESTING	8G-15
REAR WINDOW DEFOGGER GRID - OPERATION	8G-15
REAR WINDOW DEFOGGER RELAY - DESCRIPTION	8G-16
REAR WINDOW DEFOGGER RELAY - DIAGNOSIS AND TESTING	8G-17
REAR WINDOW DEFOGGER RELAY - INSTALLATION	8G-18
REAR WINDOW DEFOGGER RELAY - OPERATION	8G-17
REAR WINDOW DEFOGGER RELAY - REMOVAL	8G-18
REAR WINDOW DEFOGGER SWITCH - DESCRIPTION	8G-18
REAR WINDOW DEFOGGER SWITCH - DIAGNOSIS AND TESTING	8G-19
REAR WINDOW DEFOGGER SWITCH - OPERATION	8G-19
REAR WINDOW DEFOGGER SWITCH - REMOVAL	8G-19
REAR WIPER & WASHER SYSTEM - CLEANING	8R-34
REAR WIPER & WASHER SYSTEM - DIAGNOSIS AND TESTING	8R-33
REAR WIPER & WASHER SYSTEM - INSPECTION	8R-35
REAR WIPER ARM - DESCRIPTION	8R-39
REAR WIPER ARM - INSTALLATION	8R-40
REAR WIPER ARM - OPERATION	8R-39
REAR WIPER ARM - REMOVAL	8R-40
REAR WIPER BLADE - DESCRIPTION	8R-40
REAR WIPER BLADE - INSTALLATION	8R-42
REAR WIPER BLADE - OPERATION	8R-41
REAR WIPER BLADE - REMOVAL	8R-41
REAR WIPER MODULE - DESCRIPTION	8R-42
REAR WIPER MODULE - INSTALLATION	8R-44
REAR WIPER MODULE - OPERATION	8R-43
REAR WIPER MODULE - REMOVAL	8R-43
REAR WIPERS/WASHERS - DESCRIPTION	8R-31
REAR WIPERS/WASHERS - OPERATION	8R-32
REARVIEW MIRROR SUPPORT BRACKET - INSTALLATION	23-168
RECEIVING - INSPECTION	30-3
RECIRCULATION DOOR - INSTALLATION	24-50
RECIRCULATION DOOR - REMOVAL	24-49
RECIRCULATION DOOR ACTUATOR - DESCRIPTION	24-33
RECIRCULATION DOOR ELECTRIC ACTUATOR - INSTALLATION	24-34
RECIRCULATION DOOR ELECTRIC ACTUATOR - REMOVAL	24-34
RECIRCULATION DOOR VACUUM ACTUATOR - INSTALLATION	24-34
RECIRCULATION DOOR VACUUM ACTUATOR - REMOVAL	24-33
RECLINER - DIAGNOSIS & TESTING, POWER SEAT	8N-29
RECLINER ASSEMBLY - INSTALLATION, SEAT TRACK	23-176
RECLINER ASSEMBLY - REMOVAL, SEAT TRACK	23-176
RECLINER MOTOR - DESCRIPTION	8N-29
RECLINER MOTOR - OPERATION	8N-29
RECOMMENDATION - STANDARD PROCEDURES, PARTS & LUBRICANT	0-1
RECOMMENDATIONS - STANDARD PROCEDURES, HOISTING AND JACKING	0-12
RECOVERY - STANDARD PROCEDURE, REFRIGERANT	24-55
RECOVERY PRESS CONTAINER - DESCRIPTION, COOLANT	7-27
RED BRAKE WARN INDICATOR SWITCH - DESCRIPTION	5-7
RED BRAKE WARN INDICATOR SWITCH - OPERATION	5-7
RED BRAKE WARNING LAMP - DIAGNOSIS AND TESTING	5-7
REFACING - STANDARD PROCEDURE	9-104,9-93
REFERENCES - DESCRIPTION, TORQUE	Intro.-7
REFILLING COOLING SYSTEM - 4.0L ENGINE - STANDARD PROCEDURE	7-15
REFILLING COOLING SYSTEM 4.7L ENGINE - STANDARD PROCEDURES	7-14
REFRIGERANT - DESCRIPTION	24-70
REFRIGERANT - OPERATION	24-70
REFRIGERANT HOSES/LINES/TUBES PRECAUTIONS, PLUMBING	24-53
REFRIGERANT LINE - DESCRIPTION	24-51
REFRIGERANT LINE - OPERATION	24-51
REFRIGERANT OIL - DESCRIPTION	24-70
REFRIGERANT OIL - OPERATION	24-70
REFRIGERANT OIL LEVEL - STANDARD PROCEDURE	24-71
REFRIGERANT RECOVERY - STANDARD PROCEDURE	24-55
REFRIGERANT SYSTEM CHARGE - STANDARD PROCEDURE	24-55
REFRIGERANT SYSTEM EVACUATE - STANDARD PROCEDURE	24-55
REFRIGERANT SYSTEM LEAKS - DIAGNOSIS AND TESTING	24-53
REFRIGERANT SYSTEM SERVICE EQUIPMENT - STANDARD PROCEDURE	24-54
REFRIGERANT SYSTEM SERVICE PORT - DESCRIPTION	24-1
REFRIGERANT SYSTEM SERVICE PORT - OPERATION	24-2
REGULATOR - DESCRIPTION, FUEL FILTER/PRESSURE	14-5
REGULATOR - DESCRIPTION, VOLTAGE	8F-32
REGULATOR - INSTALLATION, FUEL FILTER/PRESSURE	14-6
REGULATOR - INSTALLATION, WINDOW	23-106, 23-112
REGULATOR - OPERATION, FUEL FILTER/PRESSURE	14-6
REGULATOR - OPERATION, VOLTAGE	8F-32
REGULATOR - REMOVAL, FUEL FILTER/PRESSURE	14-6
REGULATOR - REMOVAL, WINDOW	23-106, 23-112
RELAY - DESCRIPTION, A/C COMPRESSOR CLUTCH	24-16
RELAY - DESCRIPTION, AUTO SHUT DOWN	8I-3
RELAY - DESCRIPTION, FUEL PUMP	14-39
RELAY - DESCRIPTION, HORN	8H-4
RELAY - DESCRIPTION, O2S HEATER	14-44
RELAY - DESCRIPTION, POWER OUTLET	8W-16
RELAY - DESCRIPTION, REAR WINDOW DEFOGGER	8G-16
RELAY - DESCRIPTION, STARTER MOTOR	8F-42
RELAY - DESCRIPTION, TRANSMISSION CONTROL	21-333
RELAY - DESCRIPTION, WIPER HIGH/LOW	8R-24
RELAY - DESCRIPTION, WIPER ON/OFF	8R-27

Description	Group-Page
RELAY - DIAGNOSIS & TESTING, POWER OUTLET	8W-16
RELAY - DIAGNOSIS AND TESTING, A/C COMPRESSOR CLUTCH	24-16
RELAY - DIAGNOSIS AND TESTING, HORN	8H-5
RELAY - DIAGNOSIS AND TESTING, REAR WINDOW DEFOGGER	8G-17
RELAY - DIAGNOSIS AND TESTING, STARTER	8F-42
RELAY - DIAGNOSIS AND TESTING, WIPER HIGH/LOW	8R-25
RELAY - DIAGNOSIS AND TESTING, WIPER ON/OFF	8R-28
RELAY - INSTALLATION, A/C COMPRESSOR CLUTCH	24-17
RELAY - INSTALLATION, AUTO SHUT DOWN	8I-4
RELAY - INSTALLATION, HORN	8H-6
RELAY - INSTALLATION, O2S HEATER	14-44
RELAY - INSTALLATION, POWER OUTLET	8W-17
RELAY - INSTALLATION, REAR WINDOW DEFOGGER	8G-18
RELAY - INSTALLATION, STARTER MOTOR	8F-44
RELAY - INSTALLATION, WIPER HIGH/LOW	8R-27
RELAY - INSTALLATION, WIPER ON/OFF	8R-30
RELAY - OPERATION, A/C COMPRESSOR CLUTCH	24-16
RELAY - OPERATION, FUEL PUMP	14-40
RELAY - OPERATION, HORN	8H-5
RELAY - OPERATION, O2S HEATER	14-44
RELAY - OPERATION, POWER OUTLET	8W-16
RELAY - OPERATION, REAR WINDOW DEFOGGER	8G-17
RELAY - OPERATION, STARTER MOTOR	8F-42
RELAY - OPERATION, TRANSMISSION CONTROL	21-333
RELAY - OPERATION, WIPER HIGH/LOW	8R-25
RELAY - OPERATION, WIPER ON/OFF	8R-28
RELAY - REMOVAL, A/C COMPRESSOR CLUTCH	24-17
RELAY - REMOVAL, AUTO SHUT DOWN	8I-3
RELAY - REMOVAL, HORN	8H-6
RELAY - REMOVAL, O2S HEATER	14-44
RELAY - REMOVAL, POWER OUTLET	8W-17
RELAY - REMOVAL, REAR WINDOW DEFOGGER	8G-18
RELAY - REMOVAL, STARTER MOTOR	8F-43
RELAY - REMOVAL, WIPER HIGH/LOW	8R-26
RELAY - REMOVAL, WIPER ON/OFF	8R-29
RELEASE - STANDARD PROCEDURE, FUEL SYSTEM PRESSURE	14-3
RELEASE CABLE - INSTALLATION, LATCH	23-123
RELEASE CABLE - REMOVAL, LATCH	23-123
RELEASE KNOB - INSTALLATION, REAR HEADREST	23-177
RELEASE KNOB - REMOVAL, REAR HEADREST	23-177
RELEASE SYSTEM - DESCRIPTION, LIFTGATE FLIP-UP GLASS POWER	8N-4
RELEASE SYSTEM - DIAGNOSIS AND TESTING, LIFTGATE FLIP-UP GLASS POWER	8N-6
RELEASE SYSTEM - OPERATION, LIFTGATE FLIP-UP GLASS POWER	8N-5
RELIEF VALVE - DESCRIPTION, HIGH PRESSURE	24-57
RELIEF VALVE - OPERATION, HIGH PRESSURE	24-57
REMINDER - INSPECTION, TRIP COMPUTER/MAINTENANCE	30-13
REMOTE KEYLESS ENTRY MODULE - DESCRIPTION	8N-9
REMOTE KEYLESS ENTRY MODULE - OPERATION	8N-9
REMOTE KEYLESS ENTRY SYSTEM - DESCRIPTION	8N-2
REMOTE KEYLESS ENTRY SYSTEM - DIAGNOSIS AND TESTING	8N-6
REMOTE KEYLESS ENTRY SYSTEM - OPERATION	8N-4
REMOTE KEYLESS ENTRY TRANSMITTER - DESCRIPTION	8N-8
REMOTE KEYLESS ENTRY TRANSMITTER - DIAGNOSIS AND TESTING	8N-8
REMOTE KEYLESS ENTRY TRANSMITTER - OPERATION	8N-8
REMOTE SWITCHES - DESCRIPTION	8A-17
REMOTE SWITCHES - DIAGNOSIS AND TESTING	8A-18
REMOTE SWITCHES - INSTALLATION	8A-20
REMOTE SWITCHES - OPERATION	8A-18
REMOTE SWITCHES - REMOVAL	8A-19
REMOVAL, 4.0L	9-18
REMOVAL, 4.0L	14-17,14-36,14-41,14-43,14-48, 14-50,14-52
REMOVAL, 4.0L	24-63,24-65
REMOVAL, 4.0L	8I-5
REMOVAL, 4.0L	8P-3
REMOVAL, 4.0L ENGINE	7-17,7-20,7-34,7-35, 7-37
REMOVAL, 4.0L ENGINE	19-38
REMOVAL, 4.7L	9-82
REMOVAL, 4.7L	14-15,14-37,14-41,14-42,14-44, 14-49,14-50,14-52
REMOVAL, 4.7L	24-63,24-66
REMOVAL, 4.7L	8I-7
REMOVAL, 4.7L	8P-3
REMOVAL, 4.7L ENGINE	7-17,7-23,7-33,7-36, 7-38
REMOVAL, 4.7L ENGINE	19-38
REMOVAL, A/C COMPRESSOR	24-58
REMOVAL, A/C COMPRESSOR CLUTCH	24-14
REMOVAL, A/C COMPRESSOR CLUTCH RELAY	24-17
REMOVAL, A/C CONDENSER	24-60
REMOVAL, A/C DISCHARGE LINE	24-61
REMOVAL, A/C EVAPORATOR	24-64
REMOVAL, A/C HEATER CONTROL	24-24
REMOVAL, A/C HIGH PRESSURE SWITCH	24-25
REMOVAL, A/C LOW PRESSURE SWITCH	24-26
REMOVAL, A/C ORIFICE TUBE	24-68
REMOVAL, ACCELERATOR PEDAL	14-35
REMOVAL, ADAPTER HOUSING SEAL	21-288
REMOVAL, AIR EXHAUSTER	23-115
REMOVAL, AIR OUTLETS	24-36
REMOVAL, AIRBAG CONTROL MODULE	8O-7
REMOVAL, AMBIENT TEMPERATURE SENSOR	8M-11
REMOVAL, AMPLIFIER	8A-5
REMOVAL, A-PILLAR TRIM	23-158
REMOVAL, ASSIST HANDLE	23-159
REMOVAL, AUTO HEADLAMP SENSOR	8L-5
REMOVAL, AUTO SHUT DOWN RELAY	8I-3
REMOVAL, AUTOMATIC DAY / NIGHT MIRROR	8N-13
REMOVAL, AUTOMATIC TRANSMISSION - 42RE	21-91
REMOVAL, AUTOMATIC TRANSMISSION - 545RFE	21-247
REMOVAL, AXLE - C/V JOINT	3-34
REMOVAL, AXLE - U-JOINT	3-35
REMOVAL, AXLE BEARINGS/SEALS	3-105,3-67
REMOVAL, AXLE SHAFT SEALS	3-34
REMOVAL, AXLE SHAFTS	3-105,3-33,3-67
REMOVAL, BATTERY	8F-17
REMOVAL, BATTERY CABLE	8F-23
REMOVAL, BATTERY HOLDDOWN	8F-19
REMOVAL, BATTERY TEMPERATURE SENSOR	8F-30
REMOVAL, BATTERY TRAY	8F-25
REMOVAL, BLEND DOOR	24-46
REMOVAL, BLEND DOOR ACTUATOR	24-30
REMOVAL, BLOWER MOTOR	24-38
REMOVAL, BLOWER MOTOR CONTROLLER	24-27
REMOVAL, BLOWER MOTOR RESISTOR BLOCK	24-28
REMOVAL, BLOWER MOTOR SWITCH	24-29
REMOVAL, BODY CONTROL/CENTRAL TIMER MODULE	8E-6
REMOVAL, B-PILLAR DOOR SEAL	23-186
REMOVAL, B-PILLAR LOWER TRIM	23-159
REMOVAL, B-PILLAR UPPER TRIM	23-159
REMOVAL, BRAKE FLUID LEVEL SWITCH	5-6
REMOVAL, BRAKE LAMP SWITCH	8L-6
REMOVAL, BRAKE TRANSMISSION SHIFT INTERLOCK MECHANISM	21-128,21-290
REMOVAL, BULB	8L-16,8L-20,8L-29,8L-31, 8L-32,8L-6
REMOVAL, BULBS	8L-28
REMOVAL, BUSHINGS	2-8
REMOVAL, CAMSHAFT	9-31
REMOVAL, CAMSHAFT BEARINGS	9-30
REMOVAL, CAMSHAFT(S) - LEFT	9-87
REMOVAL, CAMSHAFT(S) - RIGHT	9-99
REMOVAL, CARGO AREA CARPET	23-159
REMOVAL, CATALYTIC CONVERTER - 4.0L	11-5
REMOVAL, CATALYTIC CONVERTER - 4.7L	11-6
REMOVAL, CD CHANGER	8A-12
REMOVAL, CHECK STRAP	23-107,23-99
REMOVAL, CHILD TETHER	8O-8
REMOVAL, CHMSL	8L-7
REMOVAL, CIGAR LIGHTER OUTLET DOOR SPRING	8W-3
REMOVAL, CLOCKSPRING	8O-10
REMOVAL, CLUSTER BEZEL	23-135
REMOVAL, COIL RAIL	8I-9
REMOVAL, COLLAPSIBLE SPACER	3-109,3-37, 3-71
REMOVAL, COLUMN	19-6
REMOVAL, COMBINATION FLASHER	8L-9
REMOVAL, CONNECTOR - AUGAT	8W-8
REMOVAL, CONNECTOR - MOLEX	8W-9
REMOVAL, CONNECTOR - THOMAS AND BETTS	8W-9
REMOVAL, CONTROLLER ANTILOCK BRAKE	8E-9
REMOVAL, COOLANT LEVEL SENSOR	7-26
REMOVAL, COWL GRILLE	23-114
REMOVAL, COWL TRIM	23-161
REMOVAL, COWL WEATHERSTRIP	23-187
REMOVAL, C-PILLAR TRIM	23-162
REMOVAL, CRANKSHAFT	9-111
REMOVAL, CRANKSHAFT MAIN BEARINGS	9-39
REMOVAL, CRANKSHAFT OIL SEAL - FRONT	9-115,9-41
REMOVAL, CRANKSHAFT OIL SEAL - REAR	9-116,9-42
REMOVAL, CYLINDER HEAD	9-20
REMOVAL, CYLINDER HEAD - LEFT	9-83
REMOVAL, CYLINDER HEAD - RIGHT	9-97
REMOVAL, CYLINDER HEAD COVER(S)	9-22
REMOVAL, DAMPER	19-32
REMOVAL, DAYTIME RUNNING LAMP MODULE	8L-10
REMOVAL, DEFROSTER DUCTS	24-38
REMOVAL, DIFFERENTIAL	3-111,3-39,3-73
REMOVAL, DIFFERENTIAL CASE BEARINGS	3-119,3-42,3-81
REMOVAL, DIODE	8W-10
REMOVAL, DOOR	23-100,23-108
REMOVAL, DOOR GLASS	23-100,23-108,23-182
REMOVAL, DOOR MODULE	8E-13
REMOVAL, DOOR SILL SCUFF PLATE	23-163
REMOVAL, DOOR SILL TRIM	23-163
REMOVAL, D-PILLAR AIR EXHAUSTER	23-115
REMOVAL, D-PILLAR APPLIQUE	23-115
REMOVAL, D-PILLAR TRIM	23-163
REMOVAL, DRAG LINK	19-33
REMOVAL, DRIVER AIRBAG	8O-14
REMOVAL, DRIVER HEATED SEAT SWITCH	8G-6
REMOVAL, DRIVER SEAT SWITCH	8N-22
REMOVAL, ELECTRONIC GOVERNOR	21-133
REMOVAL, ELECTRONIC VEHICLE INFO CENTER	8M-9
REMOVAL, ENGINE - 4.0L	9-12
REMOVAL, ENGINE 4.7L	9-72
REMOVAL, ENGINE-TO-BODY GROUND STRAP	8A-16
REMOVAL, EVAP/PURGE SOLENOID	25-27
REMOVAL, EXHAUST MANIFOLD	9-59
REMOVAL, EXHAUST MANIFOLD - LEFT	9-138
REMOVAL, EXHAUST MANIFOLD - RIGHT	9-138
REMOVAL, EXHAUST PIPE - 4.0L	11-8
REMOVAL, EXHAUST PIPE - 4.7L	11-10
REMOVAL, EXHAUST-TO-BODY GROUND STRAP	8A-16
REMOVAL, EXTENSION HOUSING BUSHING	21-135
REMOVAL, EXTENSION HOUSING SEAL	21-135
REMOVAL, EXTERIOR HANDLE	23-101,23-108, 23-93
REMOVAL, EXTERIOR NAME PLATES	23-115
REMOVAL, FENDER/QUARTER PANEL	23-113
REMOVAL, FIXED ORIFICE FITTING	25-26

Description	Group-Page
REMOVAL, FLEX PLATE	9-116
REMOVAL, FLIP-UP GLASS	23-93
REMOVAL, FLIP-UP GLASS LATCH	23-94
REMOVAL, FLIP-UP GLASS LATCH STRIKER	23-95
REMOVAL, FLIP-UP GLASS SWITCH	23-95
REMOVAL, FLIP-UP GLASS WEATHERSTRIP	23-188
REMOVAL, FLOOR CONSOLE	23-164
REMOVAL, FLOOR DISTRIBUTION DUCTS	24-39
REMOVAL, FLUID COOLER	19-40
REMOVAL, FLUID RESERVOIR	5-21
REMOVAL, FOG LAMP	8L-11
REMOVAL, FOG LAMP UNIT	8L-11
REMOVAL, FOLDING REAR SEAT BACK LATCH / LOCK	23-180
REMOVAL, FOLDING REAR SEAT BACK LATCH HANDLE	23-180
REMOVAL, FOLDING REAR SEAT BACK LATCH/HINGE	23-181
REMOVAL, FRONT ABSORBER	13-1
REMOVAL, FRONT AXLE - 186FBI	3-21
REMOVAL, FRONT CARPET	23-159
REMOVAL, FRONT CHECK VALVE	8R-9
REMOVAL, FRONT DISC BRAKE CALIPER	5-13
REMOVAL, FRONT DISC BRAKE ROTOR	5-27
REMOVAL, FRONT DISC BRAKE SHOES	5-10
REMOVAL, FRONT DOOR	23-113
REMOVAL, FRONT DOOR GLASS RUN WEATHERSTRIP	23-187
REMOVAL, FRONT DOOR INNER BELT WEATHERSTRIP	23-187
REMOVAL, FRONT DOOR OUTER BELT WEATHERSTRIP	23-188
REMOVAL, FRONT DOOR SECOND WEATHERSTRIP	23-188
REMOVAL, FRONT DOOR WEATHERSTRIP	23-188
REMOVAL, FRONT FASCIA	13-1
REMOVAL, FRONT FENDER	23-116
REMOVAL, FRONT HEADREST	23-172
REMOVAL, FRONT HEADREST SLEEVE	23-173
REMOVAL, FRONT MOUNT	9-124
REMOVAL, FRONT OUTPUT SHAFT SEAL	21-35, 21-61
REMOVAL, FRONT PARKING BRAKE CABLE	5-29
REMOVAL, FRONT POWER OUTLET	8W-14
REMOVAL, FRONT SEAT	23-174
REMOVAL, FRONT SEAT BACK	23-174
REMOVAL, FRONT SEAT BACK COVER	23-175
REMOVAL, FRONT SEAT BELT & RETRACTOR	8O-18
REMOVAL, FRONT SEAT BELT BUCKLE	8O-19
REMOVAL, FRONT SEAT CUSHION	23-175
REMOVAL, FRONT SEAT SIDE SHIELD	23-176
REMOVAL, FRONT SKID PLATE	13-7
REMOVAL, FRONT TOW HOOK	13-7
REMOVAL, FRONT TUBE AXLE	3-15
REMOVAL, FRONT WASHER NOZZLE	8R-10
REMOVAL, FRONT WASHER PUMP/ MOTOR	8R-12
REMOVAL, FRONT WHEEL SPEED SENSOR	5-38
REMOVAL, FRONT WIPER ARM	8R-13
REMOVAL, FRONT WIPER BLADE	8R-14
REMOVAL, FRONT WIPER MODULE	8R-16
REMOVAL, FUEL FILL DOOR	23-117
REMOVAL, FUEL FILLER CAP	25-28
REMOVAL, FUEL FILTER/PRESSURE REGULATOR	14-6
REMOVAL, FUEL INJECTOR	14-39
REMOVAL, FUEL LEVEL SENDING UNIT / SENSOR	14-8
REMOVAL, FUEL PUMP MODULE	14-13
REMOVAL, FUEL TANK	14-19
REMOVAL, FUSE COVER	8W-18
REMOVAL, GAS PROP	23-121
REMOVAL, GEAR	19-15
REMOVAL, GEARSHIFT CABLE	21-145,21-296
REMOVAL, GENERATOR	8F-31
REMOVAL, GLASS RUN CHANNEL	23-101
REMOVAL, GLOVE BOX	23-136
REMOVAL, GLOVE BOX LAMP/SWITCH	8L-34
REMOVAL, GLOVE BOX LATCH	23-137
REMOVAL, GLOVE BOX LATCH STRIKER	23-138
REMOVAL, GRILLE	23-118
REMOVAL, G-SWITCH	5-39
REMOVAL, HCU (HYDRAULIC CONTROL UNIT)	5-42
REMOVAL, HEADLAMP MOUNTING MODULE	23-118
REMOVAL, HEADLAMP UNIT	8L-17
REMOVAL, HEADLINER	23-165
REMOVAL, HEAT/DEFROST - PANEL/ DEFROST DOOR ELECTRIC ACTUATOR	24-31
REMOVAL, HEAT/DEFROST DOOR	24-47
REMOVAL, HEAT/DEFROST DOOR VACUUM ACTUATOR	24-32
REMOVAL, HEATER CORE	24-68
REMOVAL, HINGE	23-102,23-109,23-121,23-95
REMOVAL, HOOD	23-121
REMOVAL, HOOD AJAR SWITCH	8Q-9
REMOVAL, HOOD AJAR SWITCH BRACKET	8Q-9
REMOVAL, HOOD AJAR SWITCH STRIKER	8Q-10
REMOVAL, HOOD SEAL	23-189
REMOVAL, HORN	8H-4
REMOVAL, HORN RELAY	8H-6
REMOVAL, HORN SWITCH	8H-7
REMOVAL, HOSES	19-41
REMOVAL, HUB / BEARING	2-8
REMOVAL, HVAC HOUSING	24-41
REMOVAL, HYDRAULIC LIFTERS	9-43
REMOVAL, IGNITION COIL	8I-11
REMOVAL, IGNITION COIL CAPACITOR	8I-13
REMOVAL, IGNITION SWITCH - IGNITION SWITCH	19-11
REMOVAL, IGNITION-OFF DRAW FUSE	8W-4
REMOVAL, IN-CAR TEMPERATURE SENSOR	24-30
REMOVAL, INLET FILTER	14-22
REMOVAL, INPUT SPEED SENSOR	21-309
REMOVAL, INSIDE HANDLE ACTUATOR	23-103, 23-109
REMOVAL, INSTRUMENT CLUSTER	8J-7
REMOVAL, INSTRUMENT PANEL ANTENNA CABLE	8A-13
REMOVAL, INSTRUMENT PANEL C-CHANNEL COVER BRACKET	23-145
REMOVAL, INSTRUMENT PANEL CENTER BEZEL - LOWER	23-146
REMOVAL, INSTRUMENT PANEL CENTER BEZEL - UPPER	23-147
REMOVAL, INSTRUMENT PANEL CENTER FLOOR TUNNEL BRACKET	23-147
REMOVAL, INSTRUMENT PANEL COURTESY LAMP BRACKET	23-148
REMOVAL, INSTRUMENT PANEL DUCTS	24-39
REMOVAL, INSTRUMENT PANEL END CAP	23-139
REMOVAL, INSTRUMENT PANEL INTERMEDIATE BRACKET	23-149
REMOVAL, INSTRUMENT PANEL LOWER RIGHT CENTER BEZEL	23-150
REMOVAL, INSTRUMENT PANEL PLENUM BRACKET	23-151
REMOVAL, INSTRUMENT PANEL STEERING COLUMN BRACKET	23-152
REMOVAL, INSTRUMENT PANEL STEERING COLUMN SUPPORT BRACKET	23-153
REMOVAL, INSTRUMENT PANEL STUCTURAL DUCT	23-140
REMOVAL, INSTRUMENT PANEL SYSTEM	23-127
REMOVAL, INSTRUMENT PANEL TOP COVER	23-141
REMOVAL, INSTRUMENT PANEL TOP PAD	23-141
REMOVAL, INSTRUMENT PANEL TRIM BEZEL - PASSENGER	23-155
REMOVAL, INSULATION	23-122
REMOVAL, INTAKE MANIFOLD	9-136,9-57
REMOVAL, INTAKE/EXHAUST VALVES & SEATS	9-104,9-25,9-93
REMOVAL, INTRUMENT PANEL TRIM BEZEL - DRIVER	23-154
REMOVAL, JUNCTION BLOCK	8W-5
REMOVAL, LAMP	8L-20,8L-28,8L-30,8L-31, 8L-32
REMOVAL, LATCH	23-103,23-110,23-122,23-95
REMOVAL, LATCH RELEASE CABLE	23-123
REMOVAL, LATCH STRIKER	23-104,23-110, 23-96
REMOVAL, LEAK DETECTION PUMP	25-30
REMOVAL, LEFT MULTI-FUNCTION SWITCH	8L-25
REMOVAL, LEFT SIDE	9-92
REMOVAL, LEVER	5-32
REMOVAL, LICENSE PLATE LAMP UNIT	8L-20
REMOVAL, LIFTGATE	23-97
REMOVAL, LIFTGATE INSULATOR	23-98
REMOVAL, LIFTGATE OPENING UPPER TRIM	23-167
REMOVAL, LIFTGATE OPENING WEATHERSTRIP	23-190
REMOVAL, LIFTGATE TRIM PANEL	23-97
REMOVAL, LINE PRESSURE (LP) SENSOR	21-310
REMOVAL, LIQUID LINE	24-62
REMOVAL, LOCK CYLINDER	23-104
REMOVAL, LOCK CYLINDER HOUSING - KEY CYLINDER	19-13
REMOVAL, LOWER BALL JOINT	2-10
REMOVAL, LOWER CONTROL ARM	2-10,2-18
REMOVAL, LOWER LIFTGATE OPENING TRIM PANEL	23-98
REMOVAL, LUGGAGE RACK	23-119
REMOVAL, LUMBAR CONTROL SWITCH	8N-23
REMOVAL, MASTER CYLINDER	5-23
REMOVAL, MEMORY HEATED SEAT/MIRROR MODULE	8E-15
REMOVAL, MEMORY SET SWITCH	8N-26
REMOVAL, MUFFLER	11-12
REMOVAL, MULTI-FUNCTION SWITCH MOUNTING HOUSING	8L-25
REMOVAL, O2S HEATER RELAY	14-44
REMOVAL, O2S SENSOR	14-46
REMOVAL, OIL FILTER	9-131,9-54
REMOVAL, OIL PAN	9-131,9-54
REMOVAL, OIL PRESSURE SENSOR/ SWITCH	9-132
REMOVAL, OIL PUMP	9-133,9-56
REMOVAL, OIL PUMP FRONT SEAL	21-318
REMOVAL, OUTPUT SHAFT FRONT BEARING	21-151
REMOVAL, OUTPUT SHAFT REAR BEARING	21-152
REMOVAL, OUTPUT SPEED SENSOR	21-319
REMOVAL, OVERDRIVE UNIT	21-153
REMOVAL, OVERHEAD CONSOLE	8M-5
REMOVAL, PANEL OUTLET DOOR	24-46
REMOVAL, PANEL/DEFROST DOOR	24-48
REMOVAL, PANEL/DEFROST DOOR VACUUM ACTUATOR	24-32
REMOVAL, PARK/NEUTRAL POSITION SWITCH	21-175
REMOVAL, PASSENGER AIRBAG	8O-21
REMOVAL, PASSENGER HEATED SEAT SWITCH	8G-11
REMOVAL, PASSENGER SEAT SWITCH	8N-28
REMOVAL, PCV VALVE - 4.7L	25-31
REMOVAL, PEDAL	5-23
REMOVAL, PINION GEAR/RING GEAR	3-119, 3-44,3-81
REMOVAL, PINION SEAL	3-107,3-36,3-69
REMOVAL, PISTON & CONNECTING ROD	9-118, 9-45
REMOVAL, PITMAN ARM	19-33
REMOVAL, PITMAN BEARING	19-20
REMOVAL, PITMAN SHAFT	19-18
REMOVAL, PITMAN SHAFT SEAL	19-22
REMOVAL, POWER BRAKE BOOSTER	5-24
REMOVAL, POWER DISTRIBUTION CENTER	8W-8
REMOVAL, POWER OUTLET DOOR	23-155
REMOVAL, POWER OUTLET RELAY	8W-17
REMOVAL, POWER WINDOW SWITCH	8N-36
REMOVAL, POWERTRAIN CONTROL MODULE	8E-20
REMOVAL, PROPELLER SHAFT - FRONT	3-7
REMOVAL, PROPELLER SHAFT - FRONT 4.7L	3-7
REMOVAL, PROPELLER SHAFT - REAR	3-8
REMOVAL, PULLEY	19-41
REMOVAL, PWM FAN CONTROL MODULE - 4.0L	7-41
REMOVAL, QUARTER TRIM PANEL	23-168
REMOVAL, QUARTER WINDOW	23-183
REMOVAL, RADIATOR - 4.0L	7-44

Description	Group-Page
REMOVAL, RADIATOR - 4.7L	7-42
REMOVAL, RADIATOR FAN - 4.0L	7-31
REMOVAL, RADIATOR FAN - 4.7L	7-28
REMOVAL, RADIO	8A-15
REMOVAL, READING LAMP	8L-35
REMOVAL, REAR ABSORBER	13-2
REMOVAL, REAR AXLE - 198RBI	3-54
REMOVAL, REAR AXLE - 226RBA	3-92
REMOVAL, REAR DISC BRAKE CALIPER	5-14
REMOVAL, REAR DISC BRAKE ROTOR	5-28
REMOVAL, REAR DISC BRAKE SHOES	5-10
REMOVAL, REAR DOOR	23-113
REMOVAL, REAR DOOR INNER BELT WEATHERSTRIP	23-190
REMOVAL, REAR DOOR OUTER BELT WEATHERSTRIP	23-190
REMOVAL, REAR DOOR SECONDARY WEATHERSTRIP	23-190
REMOVAL, REAR DOOR WEATHERSTRIP	23-191
REMOVAL, REAR FASCIA	13-2
REMOVAL, REAR FLOOR HEAT DUCT	24-40
REMOVAL, REAR HEADREST	23-177
REMOVAL, REAR HEADREST FOLDING MECHANISM	23-178
REMOVAL, REAR HEADREST RELEASE KNOB	23-177
REMOVAL, REAR HEADREST SLEEVE	23-178
REMOVAL, REAR MOUNT	9-124
REMOVAL, REAR PARKING BRAKE CABLES	5-30
REMOVAL, REAR POWER OUTLET	8W-14
REMOVAL, REAR RETAINER BUSHING AND SEAL	21-62
REMOVAL, REAR RETAINER BUSHING AND SEAL - NV242HD	21-35
REMOVAL, REAR SEAT BACK	23-178
REMOVAL, REAR SEAT BACK COVER	23-179
REMOVAL, REAR SEAT BELT & RETRACTOR	8O-22
REMOVAL, REAR SEAT BELT BUCKLE	8O-24
REMOVAL, REAR SEAT CUSHION	23-179
REMOVAL, REAR SEAT CUSHION COVER	23-180
REMOVAL, REAR STORAGE BOX	23-168
REMOVAL, REAR TOW HOOK	13-7
REMOVAL, REAR VIEW MIRROR	23-168
REMOVAL, REAR WASHER NOZZLE	8R-37
REMOVAL, REAR WASHER PUMP/ MOTOR	8R-38
REMOVAL, REAR WHEEL SPEED SENSOR	5-40
REMOVAL, REAR WINDOW DEFOGGER RELAY	8G-18
REMOVAL, REAR WINDOW DEFOGGER SWITCH	8G-19
REMOVAL, REAR WIPER ARM	8R-40
REMOVAL, REAR WIPER BLADE	8R-41
REMOVAL, REAR WIPER MODULE	8R-43
REMOVAL, RECIRCULATION DOOR	24-49
REMOVAL, RECIRCULATION DOOR ELECTRIC ACTUATOR	24-34
REMOVAL, RECIRCULATION DOOR VACUUM ACTUATOR	24-33
REMOVAL, REMOTE SWITCHES	8A-19
REMOVAL, RESERVOIR	19-42
REMOVAL, RIGHT MULTI-FUNCTION SWITCH	8R-19
REMOVAL, RIGHT SIDE	9-103
REMOVAL, ROCKER ARM / ADJUSTER ASSEMBLY	9-106,9-26,9-95
REMOVAL, ROLLOVER VALVE	14-26
REMOVAL, ROOF RAIL WEATHERSTRIP / RETAINER	23-191
REMOVAL, SEAT BELT TURNING LOOP ADJUSTER	8O-26
REMOVAL, SEAT TRACK & RECLINER ASSEMBLY	23-176
REMOVAL, SEAT TRACK ADJUSTER	23-176
REMOVAL, SENTRY KEY IMMOBILIZER MODULE	8E-22
REMOVAL, SERVO	8P-5
REMOVAL, SHIFT CABLE	21-36,21-63
REMOVAL, SHIFT MECHANISM	21-188,21-325
REMOVAL, SHOCK	2-11,2-18
REMOVAL, SHOES	5-33
REMOVAL, SIDE VIEW MIRROR	23-120
REMOVAL, SIDE VIEW MIRROR GLASS	23-119
REMOVAL, SIDEVIEW MIRROR	8N-16
REMOVAL, SPARK PLUG	8I-16
REMOVAL, SPOOL VALVE	19-25
REMOVAL, SPRING	2-12,2-19
REMOVAL, STABILIZER BAR	2-13,2-20
REMOVAL, STARTER MOTOR	8F-40
REMOVAL, STARTER MOTOR RELAY	8F-43
REMOVAL, STEERING COLUMN OPENING COVER	23-156
REMOVAL, STEERING GEAR HOUSING PLUG	19-27
REMOVAL, STEERING KNUCKLE	2-9
REMOVAL, STEERING WHEEL	19-14
REMOVAL, STRUCTURAL COVER	9-123
REMOVAL, STRUCTURAL SUPPORT	9-50
REMOVAL, STUDS	22-10
REMOVAL, SUN VISOR	23-169
REMOVAL, SWITCH	8P-7
REMOVAL, TERMINAL	8W-11
REMOVAL, THERMAL GUARD	8F-26
REMOVAL, TIE ROD END	19-34
REMOVAL, TIMING BELT / CHAIN COVER(S)	9-146,9-59
REMOVAL, TIMING BELT/CHAIN AND SPROCKETS	9-146,9-60
REMOVAL, TORQUE CONVERTER	21-197,21-332
REMOVAL, TRACK BAR	2-13
REMOVAL, TRAILER HITCH	13-8
REMOVAL, TRANSFER CASE - NV242	21-3
REMOVAL, TRANSFER CASE - NV247	21-40
REMOVAL, TRANSFER CASE SKID PLATE	13-8
REMOVAL, TRANSMISSION SOLENOID/ TRS ASSEMBLY	21-334
REMOVAL, TRIM PANEL	23-104,23-111
REMOVAL, TURNING LOOP HEIGHT ADJUSTER KNOB	8O-27
REMOVAL, UPPER BALL JOINT	2-14,2-20
REMOVAL, UPPER CONTROL ARM	2-15,2-21
REMOVAL, VACUUM CHECK VALVE	24-35
REMOVAL, VACUUM RESERVOIR	24-35
REMOVAL, VACUUM RESERVOIR	8P-8
REMOVAL, VALVE BODY	21-216,21-337
REMOVAL, VALVE SPRINGS	9-28
REMOVAL, VANITY LAMP	8L-36
REMOVAL, VAPOR CANISTER	25-32
REMOVAL, VIBRATION DAMPER	9-121,9-49
REMOVAL, WASHER FLUID LEVEL SWITCH	8R-21
REMOVAL, WASHER RESERVOIR	8R-23
REMOVAL, WATER PUMP - 4.0L	7-50
REMOVAL, WATER PUMP - 4.7L	7-48
REMOVAL, WATER PUMP INLET TUBE	7-54
REMOVAL, WATERDAM	23-105,23-111
REMOVAL, WINDOW MOTOR	8N-38
REMOVAL, WINDOW REGULATOR	23-106, 23-112
REMOVAL, WINDSHIELD	23-184
REMOVAL, WIPER ARM PARK RAMP	8R-44
REMOVAL, WIPER HIGH/LOW RELAY	8R-26
REMOVAL, WIPER ON/OFF RELAY	8R-29
REMOVAL, WORM SHAFT	19-28
REPAIR - DESCRIPTION, THREADED HOLE	Intro.-4
REPAIR - STANDARD PROCEDURE, ALUMINUM THREAD	21-247,21-91
REPAIR - STANDARD PROCEDURE, REAR GLASS HEATING GRID	8G-15
REPAIR DAMAGED OR WORN THREADS - STANDARD PROCEDURE	9-10,9-70
REPAIRING LEAKS - STANDARD PROCEDURE	22-7
REQUIREMENTS - DESCRIPTION, COOLING SYSTEM	24-1
REQUIREMENTS, SPECIFICATIONS - FUEL	0-4
RESERVOIR - DESCRIPTION, VACUUM	24-35
RESERVOIR - DESCRIPTION, VACUUM	8P-7
RESERVOIR - DESCRIPTION, WASHER	8R-22
RESERVOIR - INSTALLATION	19-42
RESERVOIR - INSTALLATION, FLUID	5-21
RESERVOIR - INSTALLATION, VACUUM	24-35
RESERVOIR - INSTALLATION, VACUUM	8P-8
RESERVOIR - INSTALLATION, WASHER	8R-24
RESERVOIR - OPERATION, VACUUM	24-35
RESERVOIR - OPERATION, VACUUM	8P-7
RESERVOIR - OPERATION, WASHER	8R-23
RESERVOIR - REMOVAL	19-42
RESERVOIR - REMOVAL, FLUID	5-21
RESERVOIR - REMOVAL, VACUUM	24-35
RESERVOIR - REMOVAL, VACUUM	8P-8
RESERVOIR - REMOVAL, WASHER	8R-23
RESISTANCE, 4.0L ENGINE - IGNITION COIL	8I-2
RESISTANCE, 4.7L V-8 ENGINE - IGNITION COIL	8I-2
RESISTOR BLOCK - DESCRIPTION, BLOWER MOTOR	24-28
RESISTOR BLOCK - DIAGNOSIS AND TESTING, BLOWER MOTOR	24-28
RESISTOR BLOCK - INSTALLATION, BLOWER MOTOR	24-28
RESISTOR BLOCK - OPERATION, BLOWER MOTOR	24-28
RESISTOR BLOCK - REMOVAL, BLOWER MOTOR	24-28
RESTRAINTS - DESCRIPTION	8O-1
RESTRAINTS - INSPECTION, SEAT BELTS, SHOULDER BELTS, RETRACTORS AND HEAD	30-10
RESTRAINTS - OPERATION	8O-2
RETAINER - ASSEMBLY, OVERRUNNING CLUTCH CAM/OVERDRIVE PISTON	21-173
RETAINER - CLEANING, OVERRUNNING CLUTCH CAM/OVERDRIVE PISTON	21-173
RETAINER - DESCRIPTION, OVERRUNNING CLUTCH CAM/ OVERDRIVE PISTON	21-172
RETAINER - DISASSEMBLY, OVERRUNNING CLUTCH CAM/ OVERDRIVE PISTON	21-172
RETAINER - INSPECTION, OVERRUNNING CLUTCH CAM/ OVERDRIVE PISTON	21-173
RETAINER - INSTALLATION, ROOF RAIL WEATHERSTRIP	23-191
RETAINER - OPERATION, OVERRUNNING CLUTCH CAM/OVERDRIVE PISTON	21-172
RETAINER - REMOVAL, ROOF RAIL WEATHERSTRIP	23-191
RETAINER BUSHING AND SEAL - INSTALLATION, REAR	21-62
RETAINER BUSHING AND SEAL - NV242HD - INSTALLATION, REAR	21-36
RETAINER BUSHING AND SEAL - NV242HD - REMOVAL, REAR	21-35
RETAINER BUSHING AND SEAL - REMOVAL, REAR	21-62
RETAINER/BULKHEAD - ASSEMBLY, 4C	21-287
RETAINER/BULKHEAD - DISASSEMBLY, 4C	21-287
RETRACTOR - INSTALLATION, FRONT SEAT BELT	8O-19
RETRACTOR - INSTALLATION, REAR SEAT BELT	8O-23
RETRACTOR - REMOVAL, FRONT SEAT BELT	8O-18
RETRACTOR - REMOVAL, REAR SEAT BELT	8O-22
RETRACTORS AND HEAD RESTRAINTS - INSPECTION, SEAT BELTS, SHOULDER BELTS	30-10
RETURN - DESCRIPTION, SENSOR	8E-18
RETURN LINE - DESCRIPTION	19-40
RETURN LINE - OPERATION	19-41
RFE TRANSMISSION, SPECIAL TOOLS	21-284
RIGHT - CLEANING, CYLINDER HEAD	9-98
RIGHT - CLEANING, CYLINDER HEAD COVER(S)	9-103
RIGHT - CLEANING, EXHAUST MANIFOLD	9-139
RIGHT - DESCRIPTION, CAMSHAFT(S)	9-99
RIGHT - DESCRIPTION, CYLINDER HEAD COVER(S)	9-103
RIGHT - DESCRIPTION, EXHAUST MANIFOLD	9-138
RIGHT - INSPECTION, CYLINDER HEAD	9-98
RIGHT - INSPECTION, EXHAUST MANIFOLD	9-139
RIGHT - INSTALLATION, CAMSHAFT(S)	9-100
RIGHT - INSTALLATION, CYLINDER HEAD	9-98
RIGHT - INSTALLATION, EXHAUST MANIFOLD	9-139
RIGHT - REMOVAL, CAMSHAFT(S)	9-99
RIGHT - REMOVAL, CYLINDER HEAD	9-97
RIGHT - REMOVAL, EXHAUST MANIFOLD	9-138
RIGHT CENTER BEZEL - INSTALLATION, INSTRUMENT PANEL LOWER	23-150

Description	Group-Page
RIGHT CENTER BEZEL - REMOVAL, INSTRUMENT PANEL LOWER	23-150
RIGHT MULTI-FUNCTION SWITCH - DESCRIPTION	8R-17
RIGHT MULTI-FUNCTION SWITCH - DIAGNOSIS AND TESTING	8R-18
RIGHT MULTI-FUNCTION SWITCH - INSTALLATION	8R-20
RIGHT MULTI-FUNCTION SWITCH - OPERATION	8R-18
RIGHT MULTI-FUNCTION SWITCH - REMOVAL	8R-19
RIGHT SIDE - INSTALLATION	9-103
RIGHT SIDE - REMOVAL	9-103
RING - FITTING - STANDARD PROCEDURE, PISTON	9-120
RING FITTING - STANDARD PROCEDURE, PISTON	9-47
RKE TRANSMITTER BATTERIES - STANDARD PROCEDURE	8N-8
RKE TRANSMITTER PROGRAMMING - STANDARD PROCEDURE	8N-8
ROAD TEST - DIAGNOSIS AND TESTING	8P-2
ROAD TEST - INSPECTION WINDSHIELD WIPERS/WASHERS	30-13
ROAD TEST INSPECTION - DESCRIPTION	30-11
ROAD TESTING - DIAGNOSIS AND TESTING	21-244,21-72
ROCKER ARM / ADJUSTER ASSEMBLY - CLEANING	9-26
ROCKER ARM / ADJUSTER ASSEMBLY - DESCRIPTION	9-106,9-26,9-94
ROCKER ARM / ADJUSTER ASSEMBLY - INSPECTION	9-27
ROCKER ARM / ADJUSTER ASSEMBLY - INSTALLATION	9-106,9-27,9-95
ROCKER ARM / ADJUSTER ASSEMBLY - OPERATION	9-26
ROCKER ARM / ADJUSTER ASSEMBLY - REMOVAL	9-106,9-26,9-95
ROD - CLEANING, PISTON & CONNECTING	9-119
ROD - DESCRIPTION, PISTON & CONNECTING	9-117,9-44
ROD - INSPECTION, PISTON & CONNECTING	9-119
ROD - INSTALLATION, PISTON & CONNECTING	9-119,9-46
ROD - REMOVAL, PISTON & CONNECTING	9-118,9-45
ROD BEARING FITTING - STANDARD PROCEDURE, CONNECTING	9-108
ROD BEARINGS - STANDARD PROCEDURES, FITTING CONNECTING	9-33
ROD END - DESCRIPTION, TIE	19-34
ROD END - INSTALLATION, TIE	19-34
ROD END - OPERATION, TIE	19-34
ROD END - REMOVAL, TIE	19-34
ROLL DOWN - STANDARD PROCEDURE, GLOVE BOX	23-136
ROLLOVER VALVE - DESCRIPTION	14-25
ROLLOVER VALVE - OPERATION	14-25
ROLLOVER VALVE - REMOVAL	14-26
ROOF RAIL WEATHERSTRIP / RETAINER - INSTALLATION	23-191
ROOF RAIL WEATHERSTRIP / RETAINER - REMOVAL	23-191
ROTATION - STANDARD PROCEDURES, TIRE	22-4
ROTOR - DIAGNOSIS AND TESTING, REAR DISC BRAKE	5-27
ROTOR - DIAGNOSIS AND TETSING, FRONT DISC BRAKE	5-26
ROTOR - INSTALLATION, FRONT DISC BRAKE	5-28
ROTOR - INSTALLATION, REAR DISC BRAKE	5-28
ROTOR - REMOVAL, FRONT DISC BRAKE	5-27
ROTOR - REMOVAL, REAR DISC BRAKE	5-28
ROTOR MACHINING - STANDARD PROCEDURES, DISC	5-27
ROUTING 4.0L ENGINE - DESCRIPTION, COOLING SYSTEM	7-3
ROUTING 4.7L ENGINE - DESCRIPTION, COOLING SYSTEM	7-1
RUN CHANNEL - INSTALLATION, GLASS	23-101
RUN CHANNEL - REMOVAL, GLASS	23-101
RUN WEATHERSTRIP - INSTALLATION, FRONT DOOR GLASS	23-187
RUN WEATHERSTRIP - REMOVAL, FRONT DOOR GLASS	23-187
RUNNING LAMP MODULE - DESCRIPTION, DAYTIME	8L-10
RUNNING LAMP MODULE - INSTALLATION, DAYTIME	8L-10
RUNNING LAMP MODULE - OPERATION, DAYTIME	8L-10
RUNNING LAMP MODULE - REMOVAL, DAYTIME	8L-10
RUNOUT - DIAGNOSIS AND TESTING, TIRE AND WHEEL	22-1
SAFETY CERTIFICATION LABEL - DESCRIPTION, VEHICLE	Intro.-10
SAFETY SWITCH - INSPECTION, NEUTRAL	30-14
SANDING/BUFFING & POLISHING - DESCRIPTION, WET	23-171
SCHEDULES - DESCRIPTION, MAINTENANCE	0-6
SCHEDULES - MAINTENANCE SCHEDULES, MAINTENANCE	0-7
SCHEDULES - UNSCHEDULED INSPECTION, MAINTENANCE	0-7
SCHEDULES, MAINTENANCE SCHEDULES - MAINTENANCE	0-7
SCHEMATICS AND DIAGRAMS - HYDRAULIC SCHEMATICS	21-107,21-262
SCHEMATICS, SCHEMATICS AND DIAGRAMS - HYDRAULIC	21-107,21-262
SCUFF PLATE - INSTALLATION, DOOR SILL	23-163
SCUFF PLATE - REMOVAL, DOOR SILL	23-163
SEAL - FRONT - INSTALLATION, CRANKSHAFT OIL	9-115,9-41
SEAL - FRONT - REMOVAL, CRANKSHAFT OIL	9-115,9-41
SEAL - INSTALLATION, ADAPTER HOUSING	21-288
SEAL - INSTALLATION, B-PILLAR DOOR	23-186
SEAL - INSTALLATION, EXTENSION HOUSING	21-135
SEAL - INSTALLATION, FRONT OUTPUT SHAFT	21-35,21-61
SEAL - INSTALLATION, HOOD	23-189
SEAL - INSTALLATION, OIL PUMP FRONT	21-318
SEAL - INSTALLATION, PINION	3-108,3-36,3-70
SEAL - INSTALLATION, PITMAN SHAFT	19-24
SEAL - INSTALLATION, REAR RETAINER BUSHING	21-62
SEAL - NV242HD - INSTALLATION, REAR RETAINER BUSHING	21-36
SEAL - NV242HD - REMOVAL, REAR RETAINER BUSHING	21-35
SEAL - REAR - INSTALLATION, CRANKSHAFT OIL	9-116,9-42
SEAL - REAR - REMOVAL, CRANKSHAFT OIL	9-116,9-42
SEAL - REMOVAL, ADAPTER HOUSING	21-288
SEAL - REMOVAL, B-PILLAR DOOR	23-186
SEAL - REMOVAL, EXTENSION HOUSING	21-135
SEAL - REMOVAL, FRONT OUTPUT SHAFT	21-35,21-61
SEAL - REMOVAL, HOOD	23-189
SEAL - REMOVAL, OIL PUMP FRONT	21-318
SEAL - REMOVAL, PINION	3-107,3-36,3-69
SEAL - REMOVAL, PITMAN SHAFT	19-22
SEAL - REMOVAL, REAR RETAINER BUSHING	21-62
SEAL AREA LEAKS - DIAGNOSIS AND TESTING, REAR	9-128,9-9
SEALER LOCATIONS, SPECIFICATIONS	23-54
SEALERS - STANDARD PROCEDURE, FORM-IN-PLACE GASKETS	9-70,9-9
SEALING - INSPECTION, BODY	30-8
SEALS - DESCRIPTION, VALVE STEM	9-107, 9-28,9-96
SEALS - INSTALLATION, AXLE SHAFT	3-34
SEALS - REMOVAL, AXLE SHAFT	3-34
SEAT - INSTALLATION, FRONT	23-174
SEAT - REMOVAL, FRONT	23-174
SEAT BACK - INSTALLATION, FRONT	23-174
SEAT BACK - INSTALLATION, REAR	23-178
SEAT BACK - REMOVAL, FRONT	23-174
SEAT BACK - REMOVAL, REAR	23-178
SEAT BACK COVER - INSTALLATION, FRONT	23-175
SEAT BACK COVER - INSTALLATION, REAR	23-179
SEAT BACK COVER - REMOVAL, FRONT	23-175
SEAT BACK COVER - REMOVAL, REAR	23-179
SEAT BACK LATCH / LOCK - INSTALLATION, FOLDING REAR	23-180
SEAT BACK LATCH / LOCK - REMOVAL, FOLDING REAR	23-180
SEAT BACK LATCH HANDLE - INSTALLATION, FOLDING REAR	23-180
SEAT BACK LATCH HANDLE - REMOVAL, FOLDING REAR	23-180
SEAT BACK LATCH/HINGE - INSTALLATION, FOLDING REAR	23-181
SEAT BACK LATCH/HINGE - REMOVAL, FOLDING REAR	23-181
SEAT BELT & RETRACTOR - INSTALLATION, FRONT	8O-19
SEAT BELT & RETRACTOR - INSTALLATION, REAR	8O-23
SEAT BELT & RETRACTOR - REMOVAL, FRONT	8O-18
SEAT BELT & RETRACTOR - REMOVAL, REAR	8O-22
SEAT BELT BUCKLE - INSTALLATION, FRONT	8O-20
SEAT BELT BUCKLE - INSTALLATION, REAR	8O-24
SEAT BELT BUCKLE - REMOVAL, FRONT	8O-19
SEAT BELT BUCKLE - REMOVAL, REAR	8O-24
SEAT BELT SWITCH - DESCRIPTION	8O-25
SEAT BELT SWITCH - DIAGNOSIS AND TESTING	8O-25
SEAT BELT SWITCH - OPERATION	8O-25
SEAT BELT TURNING LOOP ADJUSTER - INSTALLATION	8O-27
SEAT BELT TURNING LOOP ADJUSTER - REMOVAL	8O-26
SEAT BELTS, SHOULDER BELTS, RETRACTORS AND HEAD RESTRAINTS - INSPECTION	30-10
SEAT CUSHION - INSTALLATION, FRONT	23-175
SEAT CUSHION - INSTALLATION, REAR	23-179
SEAT CUSHION - REMOVAL, FRONT	23-175
SEAT CUSHION - REMOVAL, REAR	23-179
SEAT CUSHION COVER - INSTALLATION, REAR	23-180
SEAT CUSHION COVER - REMOVAL, REAR	23-180
SEAT ELEMENT - DESCRIPTION, HEATED	8G-7
SEAT ELEMENT - DIAGNOSIS & TESTING, HEATED	8G-7
SEAT ELEMENT - OPERATION, HEATED	8G-7
SEAT MODULE - DIAGNOSIS & TESTING, HEATED	8E-14
SEAT RECLINER - DIAGNOSIS & TESTING, POWER	8N-29
SEAT SENSOR - DIAGNOSIS & TESTING, HEATED	8G-9
SEAT SIDE SHIELD - INSTALLATION, FRONT	23-176
SEAT SIDE SHIELD - REMOVAL, FRONT	23-176
SEAT SWITCH - DESCRIPTION, DRIVER	8N-19
SEAT SWITCH - DESCRIPTION, DRIVER HEATED	8G-5
SEAT SWITCH - DESCRIPTION, PASSENGER	8N-26
SEAT SWITCH - DESCRIPTION, PASSENGER HEATED	8G-10
SEAT SWITCH - DIAGNOSIS & TESTING	8N-20, 8N-27
SEAT SWITCH - DIAGNOSIS & TESTING, HEATED	8G-10,8G-5
SEAT SWITCH - INSTALLATION, DRIVER	8N-22
SEAT SWITCH - INSTALLATION, DRIVER HEATED	8G-7
SEAT SWITCH - INSTALLATION, PASSENGER	8N-28
SEAT SWITCH - INSTALLATION, PASSENGER HEATED	8G-12
SEAT SWITCH - OPERATION, DRIVER	8N-20
SEAT SWITCH - OPERATION, DRIVER HEATED	8G-5
SEAT SWITCH - OPERATION, PASSENGER	8N-26

Description	Group-Page
SEAT SWITCH - OPERATION, PASSENGER HEATED	8G-10
SEAT SWITCH - REMOVAL, DRIVER	8N-22
SEAT SWITCH - REMOVAL, DRIVER HEATED	8G-6
SEAT SWITCH - REMOVAL, PASSENGER	8N-28
SEAT SWITCH - REMOVAL, PASSENGER HEATED	8G-11
SEAT SYSTEM - DESCRIPTION, HEATED	8G-3
SEAT SYSTEM - DIAGNOSIS & TESTING, HEATED	8G-4
SEAT SYSTEM - DIAGNOSIS & TESTING, POWER	8N-19
SEAT SYSTEM - OPERATION, HEATED	8G-4
SEAT SYSTEM - OPERATION, POWER	8N-18
SEAT TRACK - DESCRIPTION, POWER	8N-30
SEAT TRACK - DIAGNOSIS & TESTING, POWER	8N-31
SEAT TRACK - OPERATION, POWER	8N-31
SEAT TRACK & RECLINER ASSEMBLY - INSTALLATION	23-176
SEAT TRACK & RECLINER ASSEMBLY - REMOVAL	23-176
SEAT TRACK ADJUSTER - INSTALLATION	23-176
SEAT TRACK ADJUSTER - REMOVAL	23-176
SEATBELT INDICATOR - DESCRIPTION	8J-26
SEATBELT INDICATOR - OPERATION	8J-26
SEAT/MIRROR MODULE - DESCRIPTION, MEMORY HEATED	8E-14
SEAT/MIRROR MODULE - INSTALLATION, MEMORY HEATED	8E-15
SEAT/MIRROR MODULE - OPERATION, MEMORY HEATED	8E-14
SEAT/MIRROR MODULE - REMOVAL, MEMORY HEATED	8E-15
SEATS - DESCRIPTION	23-172
SEATS - DESCRIPTION, INTAKE/ EXHAUST VALVES	9-103,9-23,9-93
SEATS - DESCRIPTION, POWER	8N-17
SEATS - INSPECTION	30-10
SEATS - INSTALLATION, INTAKE/ EXHAUST VALVES	9-105,9-25,9-94
SEATS - OPERATION	23-172
SEATS - REMOVAL, INTAKE/EXHAUST VALVES	9-104,9-25,9-93
SECOND WEATHERSTRIP - INSTALLATION, FRONT DOOR	23-188
SECOND WEATHERSTRIP - REMOVAL, FRONT DOOR	23-188
SECONDARY WEATHERSTRIP - INSTALLATION, REAR DOOR	23-191
SECONDARY WEATHERSTRIP - REMOVAL, REAR DOOR	23-190
SECURITY SYSTEM - DESCRIPTION, VEHICLE THEFT	8Q-1
SECURITY SYSTEM - DIAGNOSIS AND TESTING, VEHICLE THEFT	8Q-4
SECURITY SYSTEM - OPERATION, VEHICLE THEFT	8Q-3
SENDING UNIT - DIAGNOSIS AND TESTING, FUEL GAUGE	14-7
SENDING UNIT / SENSOR - DESCRIPTION, FUEL LEVEL	14-7
SENDING UNIT / SENSOR - INSTALLATION, FUEL LEVEL	14-8
SENDING UNIT / SENSOR - OPERATION, FUEL LEVEL	14-7
SENDING UNIT / SENSOR - REMOVAL, FUEL LEVEL	14-8
SENSE - DESCRIPTION, IGNITION CIRCUIT	8E-18
SENSE - OPERATION, IGNITION CIRCUIT	8E-19
SENSE - PCM INPUT - OPERATION, ASD	8I-3
SENSOR - DESCRIPTION, AMBIENT TEMPERATURE	8M-10
SENSOR - DESCRIPTION, BATTERY TEMPERATURE	8F-30
SENSOR - DESCRIPTION, ENGINE COOLANT TEMP	7-35
SENSOR - DESCRIPTION, ENGINE OIL PRESSURE	9-56
SENSOR - DESCRIPTION, FRONT WHEEL SPEED	5-38
SENSOR - DESCRIPTION, FUEL LEVEL SENDING UNIT	14-7
SENSOR - DESCRIPTION, IN-CAR TEMPERATURE	24-30
SENSOR - DESCRIPTION, INPUT SPEED	21-309
SENSOR - DESCRIPTION, INTAKE AIR TEMPERATURE	14-41
SENSOR - DESCRIPTION, LINE PRESSURE (LP)	21-310
SENSOR - DESCRIPTION, MAP	14-42
SENSOR - DESCRIPTION, O2S	14-44
SENSOR - DESCRIPTION, OUTPUT SPEED	21-319
SENSOR - DESCRIPTION, REAR WHEEL SPEED	5-40
SENSOR - DESCRIPTION, SPEED	21-191
SENSOR - DESCRIPTION, THROTTLE POSITION	14-51
SENSOR - DESCRIPTION, TRANSMISSION RANGE	21-333
SENSOR - DESCRIPTION, TRANSMISSION TEMPERATURE	21-199,21-335
SENSOR - DIAGNOSIS & TESTING, HEATED SEAT	8G-9
SENSOR - DIAGNOSIS AND TESTING, AMBIENT TEMPERATURE	8M-11
SENSOR - INSTALLATION, AMBIENT TEMPERATURE	8M-12
SENSOR - INSTALLATION, AUTO HEADLAMP	8L-5
SENSOR - INSTALLATION, BATTERY TEMPERATURE	8F-30
SENSOR - INSTALLATION, COOLANT LEVEL	7-27
SENSOR - INSTALLATION, FRONT WHEEL SPEED	5-38
SENSOR - INSTALLATION, FUEL LEVEL SENDING UNIT	14-8
SENSOR - INSTALLATION, INPUT SPEED	21-309
SENSOR - INSTALLATION, LINE PRESSURE (LP)	21-310
SENSOR - INSTALLATION, O2S	14-46
SENSOR - INSTALLATION, OUTPUT SPEED	21-319
SENSOR - INSTALLATION, REAR WHEEL SPEED	5-41
SENSOR - OPERATION, AMBIENT TEMPERATURE	8M-10
SENSOR - OPERATION, BATTERY TEMPERATURE	8F-30
SENSOR - OPERATION, ENGINE COOLANT TEMP	7-35
SENSOR - OPERATION, ENGINE OIL PRESSURE	9-56
SENSOR - OPERATION, FRONT WHEEL SPEED	5-38
SENSOR - OPERATION, FUEL LEVEL SENDING UNIT	14-7
SENSOR - OPERATION, IN-CAR TEMPERATURE	24-30
SENSOR - OPERATION, INPUT SPEED	21-309
SENSOR - OPERATION, INTAKE AIR TEMPERATURE	14-41
SENSOR - OPERATION, LINE PRESSURE (LP)	21-310
SENSOR - OPERATION, MAP	14-42
SENSOR - OPERATION, O2S	14-45
SENSOR - OPERATION, OUTPUT SPEED	21-319
SENSOR - OPERATION, REAR WHEEL SPEED	5-40
SENSOR - OPERATION, SPEED	21-191
SENSOR - OPERATION, THROTTLE POSITION	14-51
SENSOR - OPERATION, TRANSMISSION RANGE	21-333
SENSOR - OPERATION, TRANSMISSION TEMPERATURE	21-199,21-335
SENSOR - REMOVAL, AMBIENT TEMPERATURE	8M-11
SENSOR - REMOVAL, AUTO HEADLAMP	8L-5
SENSOR - REMOVAL, BATTERY TEMPERATURE	8F-30
SENSOR - REMOVAL, COOLANT LEVEL	7-26
SENSOR - REMOVAL, FRONT WHEEL SPEED	5-38
SENSOR - REMOVAL, FUEL LEVEL SENDING UNIT	14-8
SENSOR - REMOVAL, IN-CAR TEMPERATURE	24-30
SENSOR - REMOVAL, INPUT SPEED	21-309
SENSOR - REMOVAL, LINE PRESSURE (LP)	21-310
SENSOR - REMOVAL, O2S	14-46
SENSOR - REMOVAL, OUTPUT SPEED	21-319
SENSOR - REMOVAL, REAR WHEEL SPEED	5-40
SENSOR (AHL) - DIAGNOSIS AND TESTING, AUTO HEADLAMP	8L-5
SENSOR CIRCUIT - DIAGNOSIS AND TESTING, AMBIENT TEMPERATURE	8M-11
SENSOR RETURN - DESCRIPTION	8E-18
SENSOR/SWITCH - DESCRIPTION, OIL PRESSURE	9-132
SENSOR/SWITCH - INSTALLATION, OIL PRESSURE	9-133
SENSOR/SWITCH - OPERATION, OIL PRESSURE	9-132
SENSOR/SWITCH - REMOVAL, OIL PRESSURE	9-132
SENTRY KEY IMMOBILIZER MODULE - DESCRIPTION	8E-21
SENTRY KEY IMMOBILIZER MODULE - INSTALLATION	8E-23
SENTRY KEY IMMOBILIZER MODULE - OPERATION	8E-21
SENTRY KEY IMMOBILIZER MODULE - REMOVAL	8E-22
SENTRY KEY IMMOBILIZER SYSTEM - DESCRIPTION	8Q-2
SENTRY KEY IMMOBILIZER SYSTEM - DIAGNOSIS AND TESTING	8Q-5
SENTRY KEY IMMOBILIZER SYSTEM - OPERATION	8Q-4
SENTRY KEY TRANSPONDER PROGRAMMING - STANDARD PROCEDURES	8Q-7
SERPENTINE DRIVE BELT - DIAGNOSIS AND TESTING	7-18,7-21
SERVO - ASSEMBLY, FRONT	21-144
SERVO - ASSEMBLY, REAR	21-188
SERVO - CLEANING, FRONT	21-144
SERVO - CLEANING, REAR	21-187
SERVO - DESCRIPTION	8P-4
SERVO - DESCRIPTION, FRONT	21-143
SERVO - DESCRIPTION, REAR	21-187
SERVO - DISASSEMBLY, FRONT	21-144
SERVO - DISASSEMBLY, REAR	21-187
SERVO - INSPECTION, FRONT	21-144
SERVO - INSTALLATION	8P-6
SERVO - OPERATION	8P-5
SERVO - OPERATION, FRONT	21-143
SERVO - OPERATION, REAR	21-187
SERVO - REMOVAL	8P-5
SET SWITCH - DESCRIPTION, MEMORY	8N-25
SET SWITCH - INSTALLATION, MEMORY	8N-26
SET SWITCH - OPERATION, MEMORY	8N-25
SET SWITCH - REMOVAL, MEMORY	8N-26
SEVERAL LOADS - STANDARD PROCEDURE, TESTING FOR SHORT TO GROUND ON FUSES POWERING	8W-7
SHAFT - ASSEMBLY, PLANETARY GEARTRAIN/OUTPUT	21-179
SHAFT - DESCRIPTION, PLANETARY GEARTRAIN/OUTPUT	21-177
SHAFT - DESCRIPTION, PROPELLER	3-1
SHAFT - DIAGNOSIS AND TESTING, PROPELLER	3-2
SHAFT - DISASSEMBLY, PLANETARY GEARTRAIN/OUTPUT	21-178
SHAFT - FRONT - INSTALLATION, PROPELLER	3-7
SHAFT - FRONT - REMOVAL, PROPELLER	3-7
SHAFT - FRONT 4.7L - INSTALLATION, PROPELLER	3-8
SHAFT - FRONT 4.7L - REMOVAL, PROPELLER	3-7
SHAFT - INSPECTION, PLANETARY GEARTRAIN/OUTPUT	21-178
SHAFT - INSTALLATION, PITMAN	19-19
SHAFT - INSTALLATION, WORM	19-28
SHAFT - OPERATION, PLANETARY GEARTRAIN/OUTPUT	21-177
SHAFT - OPERATION, PROPELLER	3-1
SHAFT - REAR - INSTALLATION, PROPELLER	3-9
SHAFT - REAR - REMOVAL, PROPELLER	3-8
SHAFT - REMOVAL, PITMAN	19-18
SHAFT - REMOVAL, WORM	19-28
SHAFT ANGLE - STANDARD PROCEDURES, PROPELLER	3-4

Description	Group-Page
SHAFT FRONT BEARING - INSTALLATION, OUTPUT	21-152
SHAFT FRONT BEARING - REMOVAL, OUTPUT	21-151
SHAFT REAR BEARING - INSTALLATION, OUTPUT	21-152
SHAFT REAR BEARING - REMOVAL, OUTPUT	21-152
SHAFT SEAL - INSTALLATION, FRONT OUTPUT	21-35,21-61
SHAFT SEAL - INSTALLATION, PITMAN	19-24
SHAFT SEAL - REMOVAL, FRONT OUTPUT	21-35,21-61
SHAFT SEAL - REMOVAL, PITMAN	19-22
SHAFT SEALS - INSTALLATION, AXLE	3-34
SHAFT SEALS - REMOVAL, AXLE	3-34
SHAFT, SPECIFICATIONS - PROPELLER	3-6
SHAFTS - INSTALLATION, AXLE	3-105,3-33,3-67
SHAFTS - REMOVAL, AXLE	3-105,3-33,3-67
SHIELD - INSTALLATION, FRONT SEAT SIDE	23-176
SHIELD - REMOVAL, FRONT SEAT SIDE	23-176
SHIELDS - DESCRIPTION, HEAT	11-11
SHIFT CABLE - INSTALLATION	21-36,21-63
SHIFT CABLE - REMOVAL	21-36,21-63
SHIFT INDICATOR (TRANSFER CASE) - DESCRIPTION	8J-27
SHIFT INDICATOR (TRANSFER CASE) - OPERATION	8J-27
SHIFT INTERLOCK - ADJUSTMENTS, BRAKE TRANSMISSION	21-129,21-291
SHIFT INTERLOCK - DIAGNOSIS AND TESTING, BRAKE TRANSMISSION	21-127, 21-290
SHIFT INTERLOCK MECHANISM - DESCRIPTION, BRAKE TRANSMISSION	21-127, 21-289
SHIFT INTERLOCK MECHANISM - INSTALLATION, BRAKE TRANSMISSION	21-128, 21-291
SHIFT INTERLOCK MECHANISM - OPERATION, BRAKE TRANSMISSION	21-127, 21-289
SHIFT INTERLOCK MECHANISM - REMOVAL, BRAKE TRANSMISSION	21-128, 21-290
SHIFT MECHANISM - DESCRIPTION	21-188, 21-324
SHIFT MECHANISM - INSTALLATION	21-189, 21-326
SHIFT MECHANISM - OPERATION	21-188, 21-324
SHIFT MECHANISM - REMOVAL	21-188,21-325
SHIFT/CLUTCH INTERLOCK SYSTEM - INSPECTION	30-14
SHIPPED LOOSE ITEMS - INSTALLATION	30-11
SHOCK - DESCRIPTION	2-11,2-18
SHOCK - INSTALLATION	2-11,2-18
SHOCK - OPERATION	2-11,2-18
SHOCK - REMOVAL	2-11,2-18
SHOE - ADJUSTMENTS, PARKING BRAKE	5-35
SHOES - DESCRIPTION, FRONT DISC BRAKE	5-8
SHOES - DESCRIPTION, REAR DISC BRAKE	5-8
SHOES - INSTALLATION	5-35
SHOES - INSTALLATION, FRONT DISC BRAKE	5-12
SHOES - INSTALLATION, REAR DISC BRAKE	5-12
SHOES - OPERATION, FRONT DISC BRAKE	5-9
SHOES - OPERATION, REAR DISC BRAKE	5-9
SHOES - REMOVAL	5-33
SHOES - REMOVAL, FRONT DISC BRAKE	5-10
SHOES - REMOVAL, REAR DISC BRAKE	5-10
SHORT TO GROUND - STANDARD PROCEDURE, TESTING FOR A	8W-6
SHORT TO GROUND ON FUSES POWERING SEVERAL LOADS - STANDARD PROCEDURE, TESTING	8W-7
SHOULDER BELTS, RETRACTORS AND HEAD RESTRAINTS - INSPECTION, SEAT BELTS	30-10
SHUT DOWN RELAY - DESCRIPTION, AUTO	8I-3
SHUT DOWN RELAY - INSTALLATION, AUTO	8I-4
SHUT DOWN RELAY - REMOVAL, AUTO	8I-3
SIDE - INSTALLATION, LEFT	9-92
SIDE - INSTALLATION, RIGHT	9-103
SIDE - REMOVAL, LEFT	9-92
SIDE - REMOVAL, RIGHT	9-103
SIDE SHIELD - INSTALLATION, FRONT SEAT	23-176
SIDE SHIELD - REMOVAL, FRONT SEAT	23-176
SIDE VIEW MIRROR - INSTALLATION	23-120
SIDE VIEW MIRROR - REMOVAL	23-120
SIDE VIEW MIRROR GLASS - INSTALLATION	23-120
SIDE VIEW MIRROR GLASS - REMOVAL	23-119
SIDEVIEW MIRROR - DESCRIPTION	8N-14
SIDEVIEW MIRROR - DIAGNOSIS AND TESTING	8N-14
SIDEVIEW MIRROR - INSTALLATION	8N-16
SIDEVIEW MIRROR - OPERATION	8N-14
SIDEVIEW MIRROR - REMOVAL	8N-16
SIGNAL & HAZARD WARNING SYSTEM - DESCRIPTION, TURN	8L-2
SIGNAL & HAZARD WARNING SYSTEM - DIAGNOSIS AND TESTING, TURN	8L-3
SIGNAL & HAZARD WARNING SYSTEM - OPERATION, TURN	8L-3
SIGNAL CANCEL CAM - DESCRIPTION, TURN	8L-29
SIGNAL CANCEL CAM - OPERATION, TURN	8L-29
SIGNAL INDICATORS - DESCRIPTION, TURN	8J-30
SIGNAL INDICATORS - DIAGNOSIS AND TESTING, TURN	8J-31
SIGNAL INDICATORS - OPERATION, TURN	8J-30
SIGNALS - INSPECTION, TURN AND EMERGENCY	30-14
SILL SCUFF PLATE - INSTALLATION, DOOR	23-163
SILL SCUFF PLATE - REMOVAL, DOOR	23-163
SILL TRIM - INSTALLATION, DOOR	23-163
SILL TRIM - REMOVAL, DOOR	23-163
SINGLE CARDAN UNIVERSAL JOINTS - ASSEMBLY	3-9
SINGLE CARDAN UNIVERSAL JOINTS - DISASSEMBLY	3-9
SKID PLATE - DESCRIPTION, FUEL TANK	13-7
SKID PLATE - INSTALLATION, FRONT	13-7
SKID PLATE - INSTALLATION, TRANSFER CASE	13-8
SKID PLATE - REMOVAL, FRONT	13-7
SKID PLATE - REMOVAL, TRANSFER CASE	13-8
SKIS INDICATOR LAMP - DESCRIPTION	8Q-11
SKIS INDICATOR LAMP - OPERATION	8Q-11
SKIS INITIALIZATION - STANDARD PROCEDURES	8Q-7
SLEEVE - INSTALLATION, FRONT HEADREST	23-173
SLEEVE - INSTALLATION, REAR HEADREST	23-178
SLEEVE - REMOVAL, FRONT HEADREST	23-173
SLEEVE - REMOVAL, REAR HEADREST	23-178
SOLENOID - DESCRIPTION	21-190
SOLENOID - DESCRIPTION, EVAP/PURGE	25-27
SOLENOID - INSTALLATION, EVAP/ PURGE	25-27
SOLENOID - OPERATION	21-190
SOLENOID - REMOVAL, EVAP/PURGE	25-27
SOLENOID SWITCH VALVE - DESCRIPTION	21-326
SOLENOID SWITCH VALVE - OPERATION	21-326
SOLENOIDS - DESCRIPTION	21-327
SOLENOIDS - OPERATION	21-327
SOLENOID/TRS ASSEMBLY - DESCRIPTION, TRANSMISSION	21-334
SOLENOID/TRS ASSEMBLY - INSTALLATION, TRANSMISSION	21-335
SOLENOID/TRS ASSEMBLY - OPERATION, TRANSMISSION	21-334
SOLENOID/TRS ASSEMBLY - REMOVAL, TRANSMISSION	21-334
SPACER - INSTALLATION, COLLAPSIBLE	3-109, 3-38,3-72
SPACER - REMOVAL, COLLAPSIBLE	3-109,3-37, 3-71
SPARE / TEMPORARY TIRE - DESCRIPTION	22-8
SPARK PLUG - CLEANING	8I-16
SPARK PLUG - DESCRIPTION	8I-13
SPARK PLUG - INSTALLATION	8I-16
SPARK PLUG - OPERATION	8I-13
SPARK PLUG - REMOVAL	8I-16
SPARK PLUG CONDITIONS - DIAGNOSIS AND TESTING	8I-13
SPARK PLUGS, SPECIFICATIONS	8I-3
SPEAKER - DIAGNOSIS AND TESTING	8A-20
SPEAKER - FRONT DOOR SPEAKER	8A-22
SPEAKER - INSTALLATION, FRONT DOOR	8A-23
SPEAKER - INSTALLATION, INSTRUMENT PANEL	8A-23
SPEAKER - INSTALLATION, REAR DOOR	8A-22
SPEAKER - INSTRUMENT PANEL SPEAKER	8A-22
SPEAKER - OPERATION	8A-20
SPEAKER - REAR DOOR SPEAKER	8A-22
SPEAKER, SPEAKER - FRONT DOOR	8A-22
SPEAKER, SPEAKER - INSTRUMENT PANEL	8A-22
SPEAKER, SPEAKER - REAR DOOR	8A-22
SPECIAL TOOLS - 4.7L ENGINE	9-78
SPECIAL TOOLS - AUDIO SYSTEMS	8A-5
SPECIAL TOOLS - AXLE	3-102,3-30,3-64
SPECIAL TOOLS - BASE BRAKES	5-6
SPECIAL TOOLS - BODY	23-92
SPECIAL TOOLS - COOLING	7-16
SPECIAL TOOLS - FRONT SUSPENSION	2-7
SPECIAL TOOLS - FUEL SYSTEM	14-5
SPECIAL TOOLS - OVERHEAD CONSOLE SYSTEMS	8M-6
SPECIAL TOOLS - POWER DISTRIBUTION SYSTEMS	8W-2
SPECIAL TOOLS - POWER STEERING GEAR	19-18
SPECIAL TOOLS - POWER STEERING PUMP	19-39
SPECIAL TOOLS - RE TRANSMISSIONS	21-121
SPECIAL TOOLS - REAR SUSPENSION	2-17
SPECIAL TOOLS - RFE TRANSMISSION	21-284
SPECIAL TOOLS - SPECIAL TOOLS	3-7
SPECIAL TOOLS - STEERING COLUMN	19-11
SPECIAL TOOLS - STEERING LINKAGE	19-32
SPECIAL TOOLS, AIRBAG SYSTEM	8O-6
SPECIAL TOOLS, SPECIAL TOOLS	3-7
SPECIAL TOOLS, WIRING/TERMINAL	8W-8
SPECIFICATIONS	13-4
SPECIFICATIONS - 2001 WJ PAINT COLOR CODES	23-170
SPECIFICATIONS - 4.7L ENGINE	9-75
SPECIFICATIONS - A/C APPLICATION TABLE	24-7
SPECIFICATIONS - ALIGNMENT	2-5
SPECIFICATIONS - BODY GAP AND FLUSH MEASUREMENTS	23-87
SPECIFICATIONS - BODY LUBRICANTS	23-4
SPECIFICATIONS - BODY OPENING DIMENSIONS	23-89
SPECIFICATIONS - BRAKE COMPONENTS	5-5
SPECIFICATIONS - BRAKE FLUID	5-20
SPECIFICATIONS - CHARGE CAPACITY	24-56
SPECIFICATIONS - EXTERIOR LAMPS	8L-5
SPECIFICATIONS - FRAME DIMENSIONS	13-4
SPECIFICATIONS - FUEL REQUIREMENTS	0-4
SPECIFICATIONS - FUEL SYSTEM PRESSURE	14-4
SPECIFICATIONS - IGNITION TIMING	8I-2
SPECIFICATIONS - POWER STEERING GEAR	19-17
SPECIFICATIONS - PROPELLER SHAFT	3-6
SPECIFICATIONS - SEALER LOCATIONS	23-54
SPECIFICATIONS - SPARK PLUGS	8I-3
SPECIFICATIONS - STRUCTURAL ADHESIVE LOCATIONS	23-71
SPECIFICATIONS - TIRES	22-8
SPECIFICATIONS - TORQUE	7-16
SPECIFICATIONS - TORQUE	9-78
SPECIFICATIONS - TORQUE	11-3
SPECIFICATIONS - TORQUE CHART	5-37,5-6
SPECIFICATIONS - TORQUE CHART	19-10,19-32, 19-39
SPECIFICATIONS - TORQUE CHART	2-17,2-6
SPECIFICATIONS - TORQUE CHART	22-10
SPECIFICATIONS - TORQUE EVAPORATION SYSTEM	25-26

Description	Group-Page
SPECIFICATIONS - TORQUE SPECIFICATIONS	23-92
SPECIFICATIONS - TORQUE SPECIFICATIONS	24-8
SPECIFICATIONS - TRANSMISSION	21-119, 21-283
SPECIFICATIONS - WELD LOCATIONS	23-5
SPECIFICATIONS, BATTERY SYSTEM	8F-6
SPECIFICATIONS, FLUID CAPACITIES	0-6
SPECIFICATIONS, SPECIFICATIONS - TORQUE	23-92
SPECIFICATIONS, SPECIFICATIONS - TORQUE	24-8
SPEED - DESCRIPTION, TIRE PRESSURE FOR HIGH	22-6
SPEED CONTROL - DESCRIPTION	8P-1
SPEED CONTROL - INSPECTION	30-13
SPEED CONTROL - OPERATION	8P-1
SPEED CONTROL - TORQUE	8P-2
SPEED SENSOR - DESCRIPTION	21-191
SPEED SENSOR - DESCRIPTION, FRONT WHEEL	5-38
SPEED SENSOR - DESCRIPTION, INPUT	21-309
SPEED SENSOR - DESCRIPTION, OUTPUT	21-319
SPEED SENSOR - DESCRIPTION, REAR WHEEL	5-40
SPEED SENSOR - INSTALLATION, FRONT WHEEL	5-38
SPEED SENSOR - INSTALLATION, INPUT	21-309
SPEED SENSOR - INSTALLATION, OUTPUT	21-319
SPEED SENSOR - INSTALLATION, REAR WHEEL	5-41
SPEED SENSOR - OPERATION	21-191
SPEED SENSOR - OPERATION, FRONT WHEEL	5-38
SPEED SENSOR - OPERATION, INPUT	21-309
SPEED SENSOR - OPERATION, OUTPUT	21-319
SPEED SENSOR - OPERATION, REAR WHEEL	5-40
SPEED SENSOR - REMOVAL, FRONT WHEEL	5-38
SPEED SENSOR - REMOVAL, INPUT	21-309
SPEED SENSOR - REMOVAL, OUTPUT	21-319
SPEED SENSOR - REMOVAL, REAR WHEEL	5-40
SPEEDOMETER - DESCRIPTION	8J-28
SPEEDOMETER - OPERATION	8J-28
SPLICE LOCATIONS - DESCRIPTION	8W-1
SPLICING - STANDARD PROCEDURE, WIRE	8W-12
SPOOL VALVE - INSTALLATION	19-25
SPOOL VALVE - REMOVAL	19-25
SPRING - DESCRIPTION	2-12,2-19
SPRING - INSTALLATION	2-12,2-19
SPRING - INSTALLATION, CIGAR LIGHTER OUTLET DOOR	8W-3
SPRING - OPERATION	2-12,2-19
SPRING - REMOVAL	2-12,2-19
SPRING - REMOVAL, CIGAR LIGHTER OUTLET DOOR	8W-3
SPRING TENSION TEST - STANDARD PROCEDURE, VALVE	9-28
SPRINGS - DESCRIPTION, VALVE	9-107,9-28, 9-96
SPRINGS - INSTALLATION, VALVE	9-29
SPRINGS - REMOVAL, VALVE	9-28
SPROCKETS - INSPECTION, TIMING BELT/CHAIN	9-147
SPROCKETS - INSTALLATION, TIMING BELT/CHAIN	9-148,9-61
SPROCKETS - REMOVAL, TIMING BELT/CHAIN	9-146,9-60
SQUEAKS, RATTLES AND WIND NOISE - INSPECTION	30-12
STABILIZER BAR - DESCRIPTION	2-13,2-20
STABILIZER BAR - INSTALLATION	2-13,2-20
STABILIZER BAR - OPERATION	2-13,2-20
STABILIZER BAR - REMOVAL	2-13,2-20
STANDARD PROCEDURE, ALUMINUM THREAD REPAIR	21-247,21-91
STANDARD PROCEDURE, BATTERY CHARGING	8F-9
STANDARD PROCEDURE, BLEEDING PROCEDURE	5-22
STANDARD PROCEDURE, BUILT-IN INDICATOR TEST	8F-12
STANDARD PROCEDURE, CAMBER	2-4
STANDARD PROCEDURE, CASTER	2-4
STANDARD PROCEDURE, CHECKING BATTERY ELECTROLYTE LEVEL	8F-9
STANDARD PROCEDURE, CLOCKSPRING CENTERING	8O-10
STANDARD PROCEDURE, COMPASS CALIBRATION	8M-4
STANDARD PROCEDURE, COMPASS DEMAGNETIZING	8M-3
STANDARD PROCEDURE, COMPASS VARIATION ADJUSTMENT	8M-4
STANDARD PROCEDURE, COMPRESSOR CLUTCH BREAK-IN	24-13
STANDARD PROCEDURE, CONNECTING ROD BEARING FITTING	9-108
STANDARD PROCEDURE, COOLER FLUSH USING TOOL 6906-B	7-56
STANDARD PROCEDURE, COOLING SYSTEM (REVERSE FLUSHING)	7-15
STANDARD PROCEDURE, CRANKSHAFT END PLAY	9-110
STANDARD PROCEDURE, CRANKSHAFT MAIN BEARING - FITTING	9-114
STANDARD PROCEDURE, CYLINDER BORE HONING	9-107,9-11
STANDARD PROCEDURE, DIODE REPLACEMENT	24-7
STANDARD PROCEDURE, DOUBLE INVERTED FLARING	5-7
STANDARD PROCEDURE, DRAINING COOLING SYSTEM - 4.0L ENGINE	7-14
STANDARD PROCEDURE, ELECTRONIC VEHICLE INFORMATION CENTER PROGRAMMING	8M-2
STANDARD PROCEDURE, ENGINE CORE AND OIL GALLERY PLUGS	9-11,9-72
STANDARD PROCEDURE, ENGINE OIL	9-129
STANDARD PROCEDURE, ENGINE OIL SERVICE	9-53
STANDARD PROCEDURE, ENGINE TIMING VERIFICATION	9-142
STANDARD PROCEDURE, FITTING CRANKSHAFT MAIN BEARINGS	9-36
STANDARD PROCEDURE, FLUID AND FILTER REPLACEMENT	21-137
STANDARD PROCEDURE, FLUID LEVEL CHECK	21-136
STANDARD PROCEDURE, FORM-IN-PLACE GASKETS & SEALERS	9-70,9-9
STANDARD PROCEDURE, FUEL SYSTEM PRESSURE RELEASE	14-3
STANDARD PROCEDURE, GLOVE BOX ROLL DOWN	23-136
STANDARD PROCEDURE, HANDLING OF NON-DEPLOYED AIRBAGS	8O-4
STANDARD PROCEDURE, HYDROMETER TEST	8F-13
STANDARD PROCEDURE, IGNITION-OFF DRAW TEST	8F-16
STANDARD PROCEDURE, ISO FLARING	5-8
STANDARD PROCEDURE, JUMP STARTING PROCEDURE	0-13
STANDARD PROCEDURE, LOAD TEST	8F-15
STANDARD PROCEDURE, MANUAL BLEEDING	5-4
STANDARD PROCEDURE, MATCH MOUNTING	22-2
STANDARD PROCEDURE, MEASURING TIMING CHAIN WEAR	9-143
STANDARD PROCEDURE, OPEN-CIRCUIT VOLTAGE TEST	8F-14
STANDARD PROCEDURE, PCM/SKIM PROGRAMMING	8E-1
STANDARD PROCEDURE, PISTON FITTING	9-117,9-44
STANDARD PROCEDURE, PISTON RING - FITTING	9-120
STANDARD PROCEDURE, PISTON RING FITTING	9-47
STANDARD PROCEDURE, PRE DELIVERY STORAGE	30-15
STANDARD PROCEDURE, PRESSURE BLEEDING	5-5
STANDARD PROCEDURE, REAR GLASS HEATING GRID REPAIR	8G-15
STANDARD PROCEDURE, REFACING	9-104,9-93
STANDARD PROCEDURE, REFILLING COOLING SYSTEM - 4.0L ENGINE	7-15
STANDARD PROCEDURE, REFRIGERANT OIL LEVEL	24-71
STANDARD PROCEDURE, REFRIGERANT RECOVERY	24-55
STANDARD PROCEDURE, REFRIGERANT SYSTEM CHARGE	24-55
STANDARD PROCEDURE, REFRIGERANT SYSTEM EVACUATE	24-55
STANDARD PROCEDURE, REFRIGERANT SYSTEM SERVICE EQUIPMENT	24-54
STANDARD PROCEDURE, REPAIR DAMAGED OR WORN THREADS	9-10,9-70
STANDARD PROCEDURE, REPAIRING LEAKS	22-7
STANDARD PROCEDURE, RKE TRANSMITTER BATTERIES	8N-8
STANDARD PROCEDURE, RKE TRANSMITTER PROGRAMMING	8N-8
STANDARD PROCEDURE, SERVICE AFTER AN AIRBAG DEPLOYMENT	8O-4
STANDARD PROCEDURE, TESTING FOR A SHORT TO GROUND	8W-6
STANDARD PROCEDURE, TESTING FOR A VOLTAGE DROP	8W-7
STANDARD PROCEDURE, TESTING FOR CONTINUITY	8W-6
STANDARD PROCEDURE, TESTING FOR SHORT TO GROUND ON FUSES POWERING SEVERAL LOADS	8W-7
STANDARD PROCEDURE, TESTING FOR VOLTAGE POTENTIAL	8W-6
STANDARD PROCEDURE, TOE POSITION	2-4
STANDARD PROCEDURE, VALVE SERVICE	9-23
STANDARD PROCEDURE, VALVE SPRING TENSION TEST	9-28
STANDARD PROCEDURE, VERIFICATION TEST	8O-5
STANDARD PROCEDURE, WHEEL REPLACEMENT	22-9
STANDARD PROCEDURE, WIRE SPLICING	8W-12
STANDARD PROCEDURES, BLEEDING ABS BRAKE SYSTEM	5-37
STANDARD PROCEDURES, BODY LUBRICATION	23-3
STANDARD PROCEDURES, DISC ROTOR MACHINING	5-27
STANDARD PROCEDURES, DRAINING COOLING SYSTEM 4.7L ENGINE	7-13
STANDARD PROCEDURES, DRILLING AND WELDING	23-3
STANDARD PROCEDURES, ENGINE GASKET SURFACE PREPARATION	9-71
STANDARD PROCEDURES, FITTING CONNECTING ROD BEARINGS	9-33
STANDARD PROCEDURES, FLUID AND FILTER REPLACEMENT	21-295
STANDARD PROCEDURES, FLUID LEVEL CHECK	21-294
STANDARD PROCEDURES, HOISTING AND JACKING RECOMMENDATIONS	0-12
STANDARD PROCEDURES, HYDROSTATIC LOCK	9-10
STANDARD PROCEDURES, INITIAL OPERATION - 4.0L	19-37
STANDARD PROCEDURES, INITIAL OPERATION - 4.7L	19-37
STANDARD PROCEDURES, OIL PUMP VOLUME CHECK	21-147,21-315
STANDARD PROCEDURES, PARTS & LUBRICANT RECOMMENDATION	0-1
STANDARD PROCEDURES, PROPELLER SHAFT ANGLE	3-4
STANDARD PROCEDURES, QUICK-CONNECT FITTINGS	14-22
STANDARD PROCEDURES, REFILLING COOLING SYSTEM 4.7L ENGINE	7-14
STANDARD PROCEDURES, SENTRY KEY TRANSPONDER PROGRAMMING	8Q-7
STANDARD PROCEDURES, SERVICE WARNINGS AND CAUTIONS	2-6
STANDARD PROCEDURES, SKIS INITIALIZATION	8Q-7
STANDARD PROCEDURES, TCM QUICK LEARN	8E-26

Description	Group-Page
STANDARD PROCEDURES, TIRE AND WHEEL BALANCE	22-2
STANDARD PROCEDURES, TIRE ROTATION	22-4
STANDARD PROCEDURES, TORQUE CONVERTER DRAINBACK VALVE	21-198
STANDARD PROCEDURES, TOWING	0-14
STANDARD PROCEDURES, TRANSMISSION FILL	21-139,21-295
STARTER - TORQUE	8F-39
STARTER MOTOR - DESCRIPTION	8F-39
STARTER MOTOR - DIAGNOSIS AND TESTING	8F-40
STARTER MOTOR - INSTALLATION	8F-41
STARTER MOTOR - OPERATION	8F-39
STARTER MOTOR - REMOVAL	8F-40
STARTER MOTOR, GAS POWERED	8F-39
STARTER MOTOR RELAY - DESCRIPTION	8F-42
STARTER MOTOR RELAY - INSTALLATION	8F-44
STARTER MOTOR RELAY - OPERATION	8F-42
STARTER MOTOR RELAY - REMOVAL	8F-43
STARTER RELAY - DIAGNOSIS AND TESTING	8F-42
STARTING - DESCRIPTION	8F-33
STARTING - OPERATION	8F-34
STARTING PROCEDURE - STANDARD PROCEDURE, JUMP	0-13
STARTING SYSTEM - DIAGNOSIS AND TESTING	8F-34
STATE DISPLAY TEST MODE - DESCRIPTION	25-1
STATIONARY GLASS - DESCRIPTION	23-182
STATIONARY GLASS - OPERATION	23-182
STEERING AND HANDLING - INSPECTION	30-12
STEERING COLUMN BRACKET - INSTALLATION, INSTRUMENT PANEL	23-152
STEERING COLUMN BRACKET - REMOVAL, INSTRUMENT PANEL	23-152
STEERING COLUMN OPENING COVER - INSTALLATION	23-157
STEERING COLUMN OPENING COVER - REMOVAL	23-156
STEERING COLUMN, SPECIAL TOOLS	19-11
STEERING COLUMN SUPPORT BRACKET - INSTALLATION, INSTRUMENT PANEL	23-153
STEERING COLUMN SUPPORT BRACKET - REMOVAL, INSTRUMENT PANEL	23-153
STEERING FLOW AND PRESSURE - DIAGNOSIS AND TESTING	19-4
STEERING GEAR - ADJUSTMENTS	19-17
STEERING GEAR HOUSING PLUG - INSTALLATION	19-27
STEERING GEAR HOUSING PLUG - REMOVAL	19-27
STEERING GEAR, SPECIAL TOOLS - POWER	19-18
STEERING GEAR, SPECIFICATIONS - POWER	19-17
STEERING KNUCKLE - REMOVAL	2-9
STEERING LINKAGE, SPECIAL TOOLS	19-32
STEERING PUMP, SPECIAL TOOLS - POWER	19-39
STEERING SYSTEM - DESCRIPTION, POWER	19-1
STEERING SYSTEM - DIAGNOSIS AND TESTING, SUSPENSION	2-2
STEERING SYSTEM - OPERATION, POWER	19-1
STEERING SYSTEM DIAGNOSIS CHARTS - DIAGNOSIS AND TESTING, POWER	19-2
STEERING WHEEL - INSTALLATION	19-14
STEERING WHEEL - REMOVAL	19-14
STEERING/RADIATOR COOLING FAN FLUID FILTER - DESCRIPTION, POWER	19-35
STEERING/RADIATOR COOLING FAN FLUID FILTER - OPERATION, POWER	19-36
STEM SEALS - DESCRIPTION, VALVE	9-107, 9-28,9-96
STEPS - NEW VEHICLE PREPARATION FORM, FINAL	30-17
STEPS - OWNER CHECK OUT, FINAL	30-17
STORAGE - DESCRIPTION, PRE DELIVERY	30-14
STORAGE - STANDARD PROCEDURE, PRE DELIVERY	30-15
STORAGE BOX - INSTALLATION, REAR	23-168
STORAGE BOX - REMOVAL, REAR	23-168
STRAP - DESCRIPTION, RADIO NOISE SUPPRESSION GROUND	8A-16
STRAP - INSTALLATION, CHECK	23-107,23-99
STRAP - INSTALLATION, ENGINE TO BODY GROUND	8A-17
STRAP - INSTALLATION, EXHAUST-TO-BODY GROUND	8A-17
STRAP - REMOVAL, CHECK	23-107,23-99
STRAP - REMOVAL, ENGINE-TO-BODY GROUND	8A-16
STRAP - REMOVAL, EXHAUST-TO-BODY GROUND	8A-16
STRIKER - INSTALLATION, FLIP-UP GLASS LATCH	23-95
STRIKER - INSTALLATION, GLOVE BOX LATCH	23-139
STRIKER - INSTALLATION, HOOD AJAR SWITCH	8Q-11
STRIKER - INSTALLATION, LATCH	23-104, 23-110,23-96
STRIKER - REMOVAL, FLIP-UP GLASS LATCH	23-95
STRIKER - REMOVAL, GLOVE BOX LATCH	23-138
STRIKER - REMOVAL, HOOD AJAR SWITCH	8Q-10
STRIKER - REMOVAL, LATCH	23-104,23-110, 23-96
STRUCTURAL ADHESIVE LOCATIONS, SPECIFICATIONS	23-71
STRUCTURAL COVER - DESCRIPTION	9-123
STRUCTURAL COVER - INSTALLATION	9-123
STRUCTURAL COVER - OPERATION	9-123
STRUCTURAL COVER - REMOVAL	9-123
STRUCTURAL SUPPORT - INSTALLATION	9-50
STRUCTURAL SUPPORT - REMOVAL	9-50
STUCTURAL DUCT - INSTALLATION, INSTRUMENT PANEL	23-140
STUCTURAL DUCT - REMOVAL, INSTRUMENT PANEL	23-140
STUDS - INSTALLATION	22-10
STUDS - REMOVAL	22-10
SUN VISOR - INSTALLATION	23-169
SUN VISOR - REMOVAL	23-169
SUPPLIES - DESCRIPTION, 5 VOLT	8E-18
SUPPLIES - OPERATION, 5 VOLT	8E-19
SUPPLY TEST - DIAGNOSIS AND TESTING, VACUUM	8P-8
SUPPORT - INSTALLATION, STRUCTURAL	9-50
SUPPORT - REMOVAL, STRUCTURAL	9-50
SUPPORT BRACKET - INSTALLATION, INSTRUMENT PANEL STEERING COLUMN	23-153
SUPPORT BRACKET - INSTALLATION, REARVIEW MIRROR	23-168
SUPPORT BRACKET - REMOVAL, INSTRUMENT PANEL STEERING COLUMN	23-153
SUPPRESSION GROUND STRAP - DESCRIPTION, RADIO NOISE	8A-16
SURFACE PREPARATION - STANDARD PROCEDURES, ENGINE GASKET	9-71
SUSPENSION - DESCRIPTION, FRONT	2-5
SUSPENSION - DESCRIPTION, REAR	2-16
SUSPENSION - DIAGNOSISI AND TESTING, REAR	2-16
SUSPENSION - WARNING, REAR	2-16
SUSPENSION AND STEERING SYSTEM - DIAGNOSIS AND TESTING	2-2
SUSPENSION ARM, BUSHINGS, AND BALL JOINT - DESCRIPTION, UPPER	2-20
SUSPENSION ARM, BUSHINGS, AND BALL JOINT - OPERATION, UPPER	2-20
SUSPENSION, SPECIAL TOOLS - FRONT	2-7
SUSPENSION, SPECIAL TOOLS - REAR	2-17
SWITCH - ADJUSTMENT, BRAKE LAMP	8L-6
SWITCH - DESCRIPTION	8P-6
SWITCH - DESCRIPTION, A/C HIGH PRESSURE	24-25
SWITCH - DESCRIPTION, A/C LOW PRESSURE	24-26
SWITCH - DESCRIPTION, BLOWER MOTOR	24-29
SWITCH - DESCRIPTION, BRAKE LAMP	8L-5
SWITCH - DESCRIPTION, DOOR AJAR	8L-32
SWITCH - DESCRIPTION, DOOR CYLINDER LOCK / UNLOCK	8N-7
SWITCH - DESCRIPTION, DRIVER DOOR AJAR	8L-33
SWITCH - DESCRIPTION, DRIVER HEATED SEAT	8G-5
SWITCH - DESCRIPTION, DRIVER SEAT	8N-19
SWITCH - DESCRIPTION, FLIP UP GLASS AJAR	8L-32
SWITCH - DESCRIPTION, HEADLAMP	8L-16
SWITCH - DESCRIPTION, HOOD AJAR	8Q-8
SWITCH - DESCRIPTION, HORN	8H-6
SWITCH - DESCRIPTION, IGNITION	19-11
SWITCH - DESCRIPTION, KEY-IN IGNITION	19-12
SWITCH - DESCRIPTION, LEFT MULTI-FUNCTION	8L-21
SWITCH - DESCRIPTION, LIFTGATE AJAR	8L-32
SWITCH - DESCRIPTION, LUMBAR CONTROL	8N-23
SWITCH - DESCRIPTION, MEMORY SET	8N-25
SWITCH - DESCRIPTION, OVERDRIVE	21-319
SWITCH - DESCRIPTION, OVERDRIVE OFF	21-153
SWITCH - DESCRIPTION, PASSENGER HEATED SEAT	8G-10
SWITCH - DESCRIPTION, PASSENGER SEAT	8N-26
SWITCH - DESCRIPTION, POWER LOCK	8N-9
SWITCH - DESCRIPTION, POWER MIRROR	8N-13
SWITCH - DESCRIPTION, POWER WINDOW	8N-35
SWITCH - DESCRIPTION, REAR WINDOW DEFOGGER	8G-18
SWITCH - DESCRIPTION, RED BRAKE WARN INDICATOR	5-7
SWITCH - DESCRIPTION, RIGHT MULTI-FUNCTION	8R-17
SWITCH - DESCRIPTION, SEAT BELT	8O-25
SWITCH - DESCRIPTION, WASHER FLUID LEVEL	8R-21
SWITCH - DIAGNOSIS & TESTING, HEATED SEAT	8G-10,8G-5
SWITCH - DIAGNOSIS & TESTING, MEMORY	8N-25
SWITCH - DIAGNOSIS & TESTING, POWER LUMBAR	8N-23
SWITCH - DIAGNOSIS & TESTING, SEAT	8N-20, 8N-27
SWITCH - DIAGNOSIS AND TESTING, A/C HIGH PRESSURE	24-25
SWITCH - DIAGNOSIS AND TESTING, A/C LOW PRESSURE	24-26
SWITCH - DIAGNOSIS AND TESTING, BRAKE LAMP	8L-5
SWITCH - DIAGNOSIS AND TESTING, DOOR AJAR	8L-33
SWITCH - DIAGNOSIS AND TESTING, HEADLAMP	8L-17
SWITCH - DIAGNOSIS AND TESTING, HOOD AJAR	8Q-9
SWITCH - DIAGNOSIS AND TESTING, HORN	8H-6
SWITCH - DIAGNOSIS AND TESTING, IGNITION	19-11
SWITCH - DIAGNOSIS AND TESTING, KEY-IN IGNITION	19-12
SWITCH - DIAGNOSIS AND TESTING, LEFT MULTI-FUNCTION	8L-23
SWITCH - DIAGNOSIS AND TESTING, PARK/NEUTRAL POSITION	21-175
SWITCH - DIAGNOSIS AND TESTING, POWER WINDOW	8N-36
SWITCH - DIAGNOSIS AND TESTING, REAR WINDOW DEFOGGER	8G-19
SWITCH - DIAGNOSIS AND TESTING, RIGHT MULTI-FUNCTION	8R-18
SWITCH - DIAGNOSIS AND TESTING, SEAT BELT	8O-25
SWITCH - IGNITION SWITCH INSTALLATION, IGNITION	19-11
SWITCH - IGNITION SWITCH REMOVAL, IGNITION	19-11
SWITCH - INSPECTION, NEUTRAL SAFETY	30-14
SWITCH - INSTALLATION	8P-7

Description	Group-Page
SWITCH - INSTALLATION, A/C HIGH PRESSURE	24-25
SWITCH - INSTALLATION, A/C LOW PRESSURE	24-26
SWITCH - INSTALLATION, BRAKE FLUID LEVEL	5-7
SWITCH - INSTALLATION, BRAKE LAMP	8L-6
SWITCH - INSTALLATION, DRIVER HEATED SEAT	8G-7
SWITCH - INSTALLATION, DRIVER SEAT	8N-22
SWITCH - INSTALLATION, FLIP-UP GLASS	23-95
SWITCH - INSTALLATION, HOOD AJAR	8Q-10
SWITCH - INSTALLATION, HORN	8H-8
SWITCH - INSTALLATION, LEFT MULTI-FUNCTION	8L-26
SWITCH - INSTALLATION, LUMBAR CONTROL	8N-24
SWITCH - INSTALLATION, MEMORY SET	8N-26
SWITCH - INSTALLATION, PARK/ NEUTRAL POSITION	21-175
SWITCH - INSTALLATION, PASSENGER HEATED SEAT	8G-12
SWITCH - INSTALLATION, PASSENGER SEAT	8N-28
SWITCH - INSTALLATION, POWER WINDOW	8N-36
SWITCH - INSTALLATION, RIGHT MULTI-FUNCTION	8R-20
SWITCH - INSTALLATION, WASHER FLUID LEVEL	8R-22
SWITCH - OPERATION	8P-6
SWITCH - OPERATION, A/C HIGH PRESSURE	24-25
SWITCH - OPERATION, A/C LOW PRESSURE	24-26
SWITCH - OPERATION, BLOWER MOTOR	24-29
SWITCH - OPERATION, BRAKE LAMP	8L-5
SWITCH - OPERATION, DOOR AJAR	8L-33
SWITCH - OPERATION, DOOR CYLINDER LOCK / UNLOCK	8N-7
SWITCH - OPERATION, DRIVER DOOR AJAR	8L-33
SWITCH - OPERATION, DRIVER HEATED SEAT	8G-5
SWITCH - OPERATION, DRIVER SEAT	8N-20
SWITCH - OPERATION, FLIP UP GLASS AJAR	8L-33
SWITCH - OPERATION, HEADLAMP	8L-17
SWITCH - OPERATION, HOOD AJAR	8Q-9
SWITCH - OPERATION, HORN	8H-6
SWITCH - OPERATION, KEY-IN IGNITION	19-12
SWITCH - OPERATION, LEFT MULTI-FUNCTION	8L-22
SWITCH - OPERATION, LIFTGATE AJAR	8L-33
SWITCH - OPERATION, LUMBAR CONTROL	8N-23
SWITCH - OPERATION, MEMORY SET	8N-25
SWITCH - OPERATION, OVERDRIVE	21-319
SWITCH - OPERATION, OVERDRIVE OFF	21-153
SWITCH - OPERATION, PASSENGER HEATED SEAT	8G-10
SWITCH - OPERATION, PASSENGER SEAT	8N-26
SWITCH - OPERATION, POWER LOCK	8N-9
SWITCH - OPERATION, POWER MIRROR	8N-14
SWITCH - OPERATION, POWER WINDOW	8N-35
SWITCH - OPERATION, REAR WINDOW DEFOGGER	8G-19
SWITCH - OPERATION, RED BRAKE WARN INDICATOR	5-7
SWITCH - OPERATION, RIGHT MULTI-FUNCTION	8R-18
SWITCH - OPERATION, SEAT BELT	8O-25
SWITCH - OPERATION, WASHER FLUID LEVEL	8R-21
SWITCH - REMOVAL	8P-7
SWITCH - REMOVAL, A/C HIGH PRESSURE	24-25
SWITCH - REMOVAL, A/C LOW PRESSURE	24-26
SWITCH - REMOVAL, BLOWER MOTOR	24-29
SWITCH - REMOVAL, BRAKE FLUID LEVEL	5-6
SWITCH - REMOVAL, BRAKE LAMP	8L-6
SWITCH - REMOVAL, DRIVER HEATED SEAT	8G-6
SWITCH - REMOVAL, DRIVER SEAT	8N-22
SWITCH - REMOVAL, FLIP-UP GLASS	23-95
SWITCH - REMOVAL, HOOD AJAR	8Q-9
SWITCH - REMOVAL, HORN	8H-7
SWITCH - REMOVAL, LEFT MULTI-FUNCTION	8L-25
SWITCH - REMOVAL, LUMBAR CONTROL	8N-23
SWITCH - REMOVAL, MEMORY SET	8N-26
SWITCH - REMOVAL, PARK/NEUTRAL POSITION	21-175
SWITCH - REMOVAL, PASSENGER HEATED SEAT	8G-11
SWITCH - REMOVAL, PASSENGER SEAT	8N-28
SWITCH - REMOVAL, POWER WINDOW	8N-36
SWITCH - REMOVAL, REAR WINDOW DEFOGGER	8G-19
SWITCH - REMOVAL, RIGHT MULTI-FUNCTION	8R-19
SWITCH - REMOVAL, WASHER FLUID LEVEL	8R-21
SWITCH BRACKET - INSTALLATION, HOOD AJAR	8Q-10
SWITCH BRACKET - REMOVAL, HOOD AJAR	8Q-9
SWITCH INSTALLATION, IGNITION SWITCH - IGNITION	19-11
SWITCH MOUNTING HOUSING - INSTALLATION, MULTI-FUNCTION	8L-27
SWITCH MOUNTING HOUSING - REMOVAL, MULTI-FUNCTION	8L-25
SWITCH REMOVAL, IGNITION SWITCH - IGNITION	19-11
SWITCH STRIKER - INSTALLATION, HOOD AJAR	8Q-11
SWITCH STRIKER - REMOVAL, HOOD AJAR	8Q-10
SWITCH VALVE - DESCRIPTION, SOLENOID	21-326
SWITCH VALVE - OPERATION, SOLENOID	21-326
SWITCHES - DESCRIPTION, REMOTE	8A-17
SWITCHES - DIAGNOSIS AND TESTING, REMOTE	8A-18
SWITCHES - INSPECTION, LIGHTS	30-9
SWITCHES - INSTALLATION, REMOTE	8A-20
SWITCHES - OPERATION, REMOTE	8A-18
SWITCHES - REMOVAL, REMOTE	8A-19
SWITCH-MANUAL TEMPERATURE CONTROL SYSTEM - DIAGNOSIS AND TESTING, BLOWER MOTOR	24-29
SYMBOLS - DESCRIPTION, INTERNATIONAL	Intro.-4
SYMBOLS - DESCRIPTION, INTERNATIONAL	0-1
SYSTEM - 4.0L - DIAGNOSIS AND TESTING, CCV	25-26
SYSTEM - 4.0L ENGINE - STANDARD PROCEDURE, DRAINING COOLING	7-14
SYSTEM - 4.0L ENGINE - STANDARD PROCEDURE, REFILLING COOLING	7-15
SYSTEM - 4.7L - DIAGNOSIS AND TESTING, PCV VALVE/PCV	25-30
SYSTEM - CLEANING, BATTERY	8F-5
SYSTEM - CLEANING, FRONT WIPER & WASHER	8R-7
SYSTEM - CLEANING, REAR WIPER & WASHER	8R-34
SYSTEM - DESCRIPTION, BATTERY	8F-1
SYSTEM - DESCRIPTION, CCV	25-24
SYSTEM - DESCRIPTION, CHIME WARNING	8B-1
SYSTEM - DESCRIPTION, EMISSION CONTROL	25-1
SYSTEM - DESCRIPTION, EVAPORATION CONTROL	25-23
SYSTEM - DESCRIPTION, HEATED SEAT	8G-3
SYSTEM - DESCRIPTION, HORN	8H-1
SYSTEM - DESCRIPTION, INSTRUMENT PANEL	23-124
SYSTEM - DESCRIPTION, LIFTGATE FLIP-UP GLASS POWER RELEASE	8N-4
SYSTEM - DESCRIPTION, MEMORY	8N-18
SYSTEM - DESCRIPTION, METRIC	Intro.-5
SYSTEM - DESCRIPTION, PCV	25-24
SYSTEM - DESCRIPTION, POWER LOCK	8N-1
SYSTEM - DESCRIPTION, POWER STEERING	19-1
SYSTEM - DESCRIPTION, REMOTE KEYLESS ENTRY	8N-2
SYSTEM - DESCRIPTION, SENTRY KEY IMMOBILIZER	8Q-2
SYSTEM - DESCRIPTION, TIMING DRIVE	9-140
SYSTEM - DESCRIPTION, TURN SIGNAL & HAZARD WARNING	8L-2
SYSTEM - DESCRIPTION, VEHICLE THEFT SECURITY	8Q-1
SYSTEM - DIAGNOSIS & TESTING, HEATED SEAT	8G-4
SYSTEM - DIAGNOSIS & TESTING, MEMORY	8N-19
SYSTEM - DIAGNOSIS & TESTING, POWER SEAT	8N-19
SYSTEM - DIAGNOSIS AND TESTING, AIRBAG	8O-3
SYSTEM - DIAGNOSIS AND TESTING, AUDIO	8A-3
SYSTEM - DIAGNOSIS AND TESTING, AUTOMATIC ZONE CONTROL	24-18
SYSTEM - DIAGNOSIS AND TESTING, BASE BRAKE	5-2
SYSTEM - DIAGNOSIS AND TESTING, BATTERY	8F-2
SYSTEM - DIAGNOSIS AND TESTING, BLOWER MOTOR SWITCH-MANUAL TEMPERATURE CONTROL	24-29
SYSTEM - DIAGNOSIS AND TESTING, CHARGING	8F-28
SYSTEM - DIAGNOSIS AND TESTING, CHIME WARNING	8B-3
SYSTEM - DIAGNOSIS AND TESTING, EXHAUST	11-3
SYSTEM - DIAGNOSIS AND TESTING, FRONT WIPER & WASHER	8R-4
SYSTEM - DIAGNOSIS AND TESTING, HORN	8H-2
SYSTEM - DIAGNOSIS AND TESTING, LIFTGATE FLIP-UP GLASS POWER RELEASE	8N-6
SYSTEM - DIAGNOSIS AND TESTING, POWER LOCK	8N-5
SYSTEM - DIAGNOSIS AND TESTING, REAR WIPER & WASHER	8R-33
SYSTEM - DIAGNOSIS AND TESTING, REMOTE KEYLESS ENTRY	8N-6
SYSTEM - DIAGNOSIS AND TESTING, SENTRY KEY IMMOBILIZER	8Q-5
SYSTEM - DIAGNOSIS AND TESTING, STARTING	8F-34
SYSTEM - DIAGNOSIS AND TESTING, SUSPENSION AND STEERING	2-2
SYSTEM - DIAGNOSIS AND TESTING, TURN SIGNAL & HAZARD WARNING	8L-3
SYSTEM - DIAGNOSIS AND TESTING, VACUUM	24-10
SYSTEM - DIAGNOSIS AND TESTING, VEHICLE THEFT SECURITY	8Q-4
SYSTEM - INSPECTION, BATTERY	8F-5
SYSTEM - INSPECTION, FRONT WIPER & WASHER	8R-7
SYSTEM - INSPECTION, REAR WIPER & WASHER	8R-35
SYSTEM - INSPECTION, SHIFT/CLUTCH INTERLOCK	30-14
SYSTEM - INSTALLATION, INSTRUMENT PANEL	23-133
SYSTEM - OPERATION, 4.0L CCV	25-24
SYSTEM - OPERATION, 4.7L PCV	25-25
SYSTEM - OPERATION, BATTERY	8F-2
SYSTEM - OPERATION, CHIME WARNING	8B-2
SYSTEM - OPERATION, COOLING	7-4
SYSTEM - OPERATION, HEATED SEAT	8G-4
SYSTEM - OPERATION, HORN	8H-2
SYSTEM - OPERATION, INSTRUMENT PANEL	23-127
SYSTEM - OPERATION, LIFTGATE FLIP-UP GLASS POWER RELEASE	8N-5
SYSTEM - OPERATION, MEMORY	8N-19
SYSTEM - OPERATION, POWER DISTRIBUTION	8W-1
SYSTEM - OPERATION, POWER LOCK	8N-4
SYSTEM - OPERATION, POWER SEAT	8N-18
SYSTEM - OPERATION, POWER STEERING	19-1
SYSTEM - OPERATION, REMOTE KEYLESS ENTRY	8N-4

Description	Group-Page
SYSTEM - OPERATION, SENTRY KEY IMMOBILIZER	8Q-4
SYSTEM - OPERATION, TIMING DRIVE	9-141
SYSTEM - OPERATION, TURN SIGNAL & HAZARD WARNING	8L-3
SYSTEM - OPERATION, VEHICLE THEFT SECURITY	8Q-3
SYSTEM - REMOVAL, INSTRUMENT PANEL	23-127
SYSTEM - SPECIAL TOOLS, AIRBAG	8O-6
SYSTEM - SPECIFICATIONS, BATTERY	8F-6
SYSTEM - STANDARD PROCEDURES, BLEEDING ABS BRAKE	5-37
SYSTEM - TORQUE, IGNITION	8I-3
SYSTEM - WARNING, AIRBAG	8O-3
SYSTEM 4.0L ENGINE - DESCRIPTION, COOLING	7-3
SYSTEM 4.0L ENGINE - DESCRIPTION, EXHAUST	11-1
SYSTEM 4.7L ENGINE - DESCRIPTION, COOLING	7-1
SYSTEM 4.7L ENGINE - STANDARD PROCEDURES, DRAINING COOLING	7-13
SYSTEM 4.7L ENGINE - STANDARD PROCEDURES, REFILLING COOLING	7-14
SYSTEM CHARGE - STANDARD PROCEDURE, REFRIGERANT	24-55
SYSTEM DEAERATION - DIAGNOSIS AND TESTING, COOLING	7-13
SYSTEM DIAGNOSIS CHART - DIAGNOSIS AND TESTING, COOLING	7-5
SYSTEM DIAGNOSIS CHARTS - DIAGNOSIS AND TESTING, POWER STEERING	19-2
SYSTEM EVACUATE - STANDARD PROCEDURE, REFRIGERANT	24-55
SYSTEM LEAKS - DIAGNOSIS AND TESTING, REFRIGERANT	24-53
SYSTEM PRESSURE RELEASE - STANDARD PROCEDURE, FUEL	14-3
SYSTEM PRESSURE, SPECIFICATIONS - FUEL	14-4
SYSTEM REQUIREMENTS - DESCRIPTION, COOLING	24-1
SYSTEM (REVERSE FLUSHING) - STANDARD PROCEDURE, COOLING	7-15
SYSTEM ROUTING 4.0L ENGINE - DESCRIPTION, COOLING	7-3
SYSTEM ROUTING 4.7L ENGINE - DESCRIPTION, COOLING	7-1
SYSTEM SERVICE EQUIPMENT - STANDARD PROCEDURE, REFRIGERANT	24-54
SYSTEM SERVICE PORT - DESCRIPTION, REFRIGERANT	24-1
SYSTEM SERVICE PORT - OPERATION, REFRIGERANT	24-2
SYSTEM, SPECIAL TOOLS - FUEL	14-5
SYSTEM, SPECIFICATIONS - TORQUE EVAPORATION	25-26
SYSTEM TESTING FOR LEAKS - DIAGNOSIS AND TESTING, COOLING	7-12
SYSTEMS - OPERATION, MONITORED	25-16
SYSTEMS, SPECIAL TOOLS - AUDIO	8A-5
SYSTEMS, SPECIAL TOOLS - OVERHEAD CONSOLE	8M-6
SYSTEMS, SPECIAL TOOLS - POWER DISTRIBUTION	8W-2
TABLE, SPECIFICATIONS - A/C APPLICATION	24-7
TACHOMETER - DESCRIPTION	8J-29
TACHOMETER - OPERATION	8J-29
TAIL LAMP - DESCRIPTION	8L-28
TAIL LAMP - OPERATION	8L-28
TAILPIPE - DESCRIPTION	11-13
TAILPIPE - OPERATION	11-13
TANK - DESCRIPTION, FUEL	14-18
TANK - INSTALLATION, FUEL	14-20
TANK - OPERATION, FUEL	14-19
TANK - REMOVAL, FUEL	14-19
TANK SKID PLATE - DESCRIPTION, FUEL	13-7
TAPE PLAYER AND/OR CD PLAYER - INSPECTION, RADIO	30-13
TASK MANAGER - DESCRIPTION	25-16
TASK MANAGER - OPERATION	25-19
TCM QUICK LEARN - STANDARD PROCEDURES	8E-26
TEMPERATURE SENSOR - DESCRIPTION, ENGINE COOLANT	7-35
TEMPERATURE SENSOR - OPERATION, ENGINE COOLANT	7-35
TEMPERATURE CONTROL SYSTEM - DIAGNOSIS AND TESTING, BLOWER MOTOR SWITCH-MANUAL	24-29
TEMPERATURE GAUGE - DESCRIPTION, ENGINE	8J-17
TEMPERATURE GAUGE - OPERATION, ENGINE	8J-18
TEMPERATURE SENSOR - DESCRIPTION, AMBIENT	8M-10
TEMPERATURE SENSOR - DESCRIPTION, BATTERY	8F-30
TEMPERATURE SENSOR - DESCRIPTION, IN-CAR	24-30
TEMPERATURE SENSOR - DESCRIPTION, INTAKE AIR	14-41
TEMPERATURE SENSOR - DESCRIPTION, TRANSMISSION	21-199,21-335
TEMPERATURE SENSOR - DIAGNOSIS AND TESTING, AMBIENT	8M-11
TEMPERATURE SENSOR - INSTALLATION, AMBIENT	8M-12
TEMPERATURE SENSOR - INSTALLATION, BATTERY	8F-30
TEMPERATURE SENSOR - OPERATION, AMBIENT	8M-10
TEMPERATURE SENSOR - OPERATION, BATTERY	8F-30
TEMPERATURE SENSOR - OPERATION, IN-CAR	24-30
TEMPERATURE SENSOR - OPERATION, INTAKE AIR	14-41
TEMPERATURE SENSOR - OPERATION, TRANSMISSION	21-199,21-335
TEMPERATURE SENSOR - REMOVAL, AMBIENT	8M-11
TEMPERATURE SENSOR - REMOVAL, BATTERY	8F-30
TEMPERATURE SENSOR - REMOVAL, IN-CAR	24-30
TEMPERATURE SENSOR CIRCUIT - DIAGNOSIS AND TESTING, AMBIENT	8M-11
TEMPORARY TIRE - DESCRIPTION, SPARE	22-8
TENSION TEST - STANDARD PROCEDURE, VALVE SPRING	9-28
TERMINAL - INSTALLATION	8W-11
TERMINAL - REMOVAL	8W-11
TEST - DIAGNOSIS AND TESTING, CYLINDER COMPRESSION PRESSURE	9-69
TEST - DIAGNOSIS AND TESTING, FUEL INJECTOR	14-39
TEST - DIAGNOSIS AND TESTING, FUEL PRESSURE LEAK DOWN	14-2
TEST - DIAGNOSIS AND TESTING, FUEL PUMP AMPERAGE	14-9
TEST - DIAGNOSIS AND TESTING, FUEL PUMP CAPACITY	14-9
TEST - DIAGNOSIS AND TESTING, FUEL PUMP PRESSURE	14-11
TEST - DIAGNOSIS AND TESTING, HYDRAULIC PRESSURE	21-245,21-74
TEST - DIAGNOSIS AND TESTING, ROAD	8P-2
TEST - DIAGNOSIS AND TESTING, VACUUM SUPPLY	8P-8
TEST - INSPECTION WINDSHIELD WIPERS/WASHERS, ROAD	30-13
TEST - STANDARD PROCEDURE, BUILT-IN INDICATOR	8F-12
TEST - STANDARD PROCEDURE, HYDROMETER	8F-13
TEST - STANDARD PROCEDURE, IGNITION-OFF DRAW	8F-16
TEST - STANDARD PROCEDURE, LOAD	8F-15
TEST - STANDARD PROCEDURE, OPEN-CIRCUIT VOLTAGE	8F-14
TEST - STANDARD PROCEDURE, VALVE SPRING TENSION	9-28
TEST - STANDARD PROCEDURE, VERIFICATION	8O-5
TEST INSPECTION - DESCRIPTION, ROAD	30-11
TEST MODE - DESCRIPTION, STATE DISPLAY	25-1
TEST MODE - OPERATION, CIRCUIT ACTUATION	25-2
TESTING - DIAGNOSIS AND TESTING, ROAD	21-244,21-72
TESTING, A/C COMPRESSOR CLUTCH RELAY - DIAGNOSIS	24-16
TESTING, A/C HIGH PRESSURE SWITCH - DIAGNOSIS	24-25
TESTING, A/C LOW PRESSURE SWITCH - DIAGNOSIS	24-26
TESTING, A/C PERFORMANCE - DIAGNOSIS	24-2
TESTING, AIR CHECKING TRANSMISSION CLUTCH AND BAND OPERATION - DIAGNOSIS	21-77
TESTING, AIR CHECKING TRANSMISSION CLUTCH OPERATION - DIAGNOSIS	21-246
TESTING, AIRBAG SYSTEM - DIAGNOSIS	8O-3
TESTING, AMBIENT TEMPERATURE SENSOR - DIAGNOSIS	8M-11
TESTING, AMBIENT TEMPERATURE SENSOR CIRCUIT - DIAGNOSIS	8M-11
TESTING, AMPLIFIER - DIAGNOSIS	8A-5
TESTING, ANTENNA - DIAGNOSIS	8A-7
TESTING, ANTILOCK BRAKES - DIAGNOSIS	5-37
TESTING, AUDIO SYSTEM - DIAGNOSIS	8A-3
TESTING, AUTO HEADLAMP SENSOR (AHL) - DIAGNOSIS	8L-5
TESTING, AUTOMATIC DAY / NIGHT MIRROR - DIAGNOSIS	8N-12
TESTING, AUTOMATIC TRANSMISSION - DIAGNOSIS	21-243,21-71
TESTING, AUTOMATIC ZONE CONTROL SYSTEM - DIAGNOSIS	24-18
TESTING, AXLE - DIAGNOSIS	3-17,3-50,3-89
TESTING, BASE BRAKE SYSTEM - DIAGNOSIS	5-2
TESTING, BATTERY - DIAGNOSIS	8F-8
TESTING, BATTERY CABLE - DIAGNOSIS	8F-21
TESTING, BATTERY SYSTEM - DIAGNOSIS	8F-2
TESTING, BLOWER MOTOR - DIAGNOSIS	24-37
TESTING, BLOWER MOTOR RESISTOR BLOCK - DIAGNOSIS	24-28
TESTING, BLOWER MOTOR SWITCH-MANUAL TEMPERATURE CONTROL SYSTEM - DIAGNOSIS	24-29
TESTING, BODY CONTROL MODULE - DIAGNOSIS	8E-6
TESTING, BRAKE FLUID CONTAMINATION - DIAGNOSIS	5-20
TESTING, BRAKE INDICATOR - DIAGNOSIS	8J-15
TESTING, BRAKE LAMP SWITCH - DIAGNOSIS	8L-5
TESTING, BRAKE LINE AND HOSES - DIAGNOSIS	5-7
TESTING, BRAKE TRANSMISSION SHIFT INTERLOCK - DIAGNOSIS	21-127,21-290
TESTING, CAUSES OF BURNT FLUID - DIAGNOSIS	21-136,21-292
TESTING, CCV SYSTEM - 4.0L - DIAGNOSIS	25-26
TESTING, CD CHANGER - DIAGNOSIS	8A-11
TESTING, CHARGING SYSTEM - DIAGNOSIS	8F-28
TESTING, CHIME WARNING SYSTEM - DIAGNOSIS	8B-3
TESTING, CIGAR LIGHTER OUTLET - DIAGNOSIS	8W-2
TESTING, COMPRESSOR CLUTCH COIL - DIAGNOSIS	24-13
TESTING, COMPRESSOR NOISE - DIAGNOSIS	24-57
TESTING, CONVERTER HOUSING FLUID LEAK - DIAGNOSIS	21-246,21-78
TESTING, COOLING SYSTEM DEAERATION - DIAGNOSIS	7-13
TESTING, COOLING SYSTEM DIAGNOSIS CHART - DIAGNOSIS	7-5
TESTING, COOLING SYSTEM TESTING FOR LEAKS - DIAGNOSIS	7-12
TESTING, CYLINDER COMBUSTION PRESSURE LEAKAGE - DIAGNOSIS	9-70,9-8
TESTING, CYLINDER COMPRESSION PRESSURE - DIAGNOSIS	9-8

Description	Group-Page
TESTING, CYLINDER COMPRESSION PRESSURE TEST - DIAGNOSIS	9-69
TESTING, CYLINDER HEAD GASKET - DIAGNOSIS	9-83,9-96
TESTING, DIAGNOSIS CHARTS - DIAGNOSIS	21-78
TESTING, DOOR AJAR SWITCH - DIAGNOSIS	8L-33
TESTING, DOOR MODULE - DIAGNOSIS	8E-12
TESTING, EFFECTS OF INCORRECT FLUID LEVEL - DIAGNOSIS	21-136,21-292
TESTING, ELECTRIC COOLING FAN - DIAGNOSIS	7-47
TESTING, ENGINE BLOCK HEATER - DIAGNOSIS	7-33
TESTING, ENGINE DIAGNOSIS - INTRODUCTION - DIAGNOSIS	9-3,9-64
TESTING, ENGINE OIL LEAK - DIAGNOSIS	9-51
TESTING, ENGINE OIL LEAK INSPECTION - DIAGNOSIS	9-128
TESTING, ENGINE OIL PRESSURE - DIAGNOSIS	9-127,9-51
TESTING, EXHAUST SYSTEM - DIAGNOSIS	11-3
TESTING, FLUID CONTAMINATION - DIAGNOSIS	21-136,21-293
TESTING FOR A SHORT TO GROUND - STANDARD PROCEDURE	8W-6
TESTING FOR A VOLTAGE DROP - STANDARD PROCEDURE	8W-7
TESTING FOR CONTINUITY - STANDARD PROCEDURE	8W-6
TESTING FOR LEAKS - DIAGNOSIS AND TESTING, COOLING SYSTEM	7-12
TESTING FOR SHORT TO GROUND ON FUSES POWERING SEVERAL LOADS - STANDARD PROCEDURE	8W-7
TESTING FOR VOLTAGE POTENTIAL - STANDARD PROCEDURE	8W-6
TESTING, FRONT POWER OUTLET - DIAGNOSIS	8W-13
TESTING, FRONT WIPER & WASHER SYSTEM - DIAGNOSIS	8R-4
TESTING, FUEL GAUGE SENDING UNIT - DIAGNOSIS	14-7
TESTING, FUEL INJECTOR TEST - DIAGNOSIS	14-39
TESTING, FUEL PRESSURE LEAK DOWN TEST - DIAGNOSIS	14-2
TESTING, FUEL PUMP AMPERAGE TEST - DIAGNOSIS	14-9
TESTING, FUEL PUMP CAPACITY TEST - DIAGNOSIS	14-9
TESTING, FUEL PUMP PRESSURE TEST - DIAGNOSIS	14-11
TESTING, GEARSHIFT CABLE - DIAGNOSIS	21-145,21-296
TESTING, HEADLAMP - DIAGNOSIS	8L-13
TESTING, HEADLAMP SWITCH - DIAGNOSIS	8L-17
TESTING, HEATED MIRRORS - DIAGNOSIS	8G-1
TESTING, HEATED SEAT ELEMENT - DIAGNOSIS	8G-7
TESTING, HEATED SEAT MODULE - DIAGNOSIS	8E-14
TESTING, HEATED SEAT SENSOR - DIAGNOSIS	8G-9
TESTING, HEATED SEAT SWITCH - DIAGNOSIS	8G-10,8G-5
TESTING, HEATED SEAT SYSTEM - DIAGNOSIS	8G-4
TESTING, HEATER PERFORMANCE - DIAGNOSIS	24-6
TESTING, HOOD AJAR SWITCH - DIAGNOSIS	8Q-9
TESTING, HORN - DIAGNOSIS	8H-3
TESTING, HORN RELAY - DIAGNOSIS	8H-5
TESTING, HORN SWITCH - DIAGNOSIS	8H-6
TESTING, HORN SYSTEM - DIAGNOSIS	8H-2
TESTING, HYDRAULIC LASH ADJUSTER NOISE DIAGNOSIS - DIAGNOSIS	9-83,9-97
TESTING, HYDRAULIC PRESSURE TEST - DIAGNOSIS	21-245,21-74
TESTING, IGNITION SWITCH - DIAGNOSIS	19-11
TESTING, INSTRUMENT CLUSTER - DIAGNOSIS	8J-5
TESTING, INTAKE MANIFOLD LEAKAGE - DIAGNOSIS	9-136
TESTING, INTAKE MANIFOLD LEAKAGE DIAGNOSIS - DIAGNOSIS	9-57
TESTING, KEY-IN IGNITION SWITCH - DIAGNOSIS	19-12
TESTING, LEFT MULTI-FUNCTION SWITCH - DIAGNOSIS	8L-23
TESTING, LIFTGATE FLIP-UP GLASS POWER RELEASE SYSTEM - DIAGNOSIS	8N-6
TESTING, MASTER CYLINDER/POWER BOOSTER - DIAGNOSIS	5-21
TESTING, MEMORY SWITCH - DIAGNOSIS	8N-25
TESTING, MEMORY SYSTEM - DIAGNOSIS	8N-19
TESTING, ON-BOARD DIAGNOSTICS (OBD) - DIAGNOSIS	7-4
TESTING, OVERDRIVE ELECTRICAL CONTROLS - DIAGNOSIS	21-153
TESTING, PARKING BRAKE - DIAGNOSIS	5-29
TESTING, PARK/NEUTRAL POSITION SWITCH - DIAGNOSIS	21-175
TESTING, PART TIME INDICATOR - DIAGNOSIS	8J-27
TESTING, PCV VALVE/PCV SYSTEM - 4.7L - DIAGNOSIS	25-30
TESTING, POWER LOCK MOTOR - DIAGNOSIS	8N-7
TESTING, POWER LOCK SYSTEM - DIAGNOSIS	8N-5
TESTING, POWER LUMBAR ADJUSTER - DIAGNOSIS	8N-25
TESTING, POWER LUMBAR SWITCH - DIAGNOSIS	8N-23
TESTING, POWER MIRRORS - DIAGNOSIS	8N-11
TESTING, POWER OUTLET RELAY - DIAGNOSIS	8W-16
TESTING, POWER SEAT RECLINER - DIAGNOSIS	8N-29
TESTING, POWER SEAT SYSTEM - DIAGNOSIS	8N-19
TESTING, POWER SEAT TRACK - DIAGNOSIS	8N-31
TESTING, POWER STEERING SYSTEM DIAGNOSIS CHARTS - DIAGNOSIS	19-2
TESTING, POWER WINDOW SWITCH - DIAGNOSIS	8N-36
TESTING, POWER WINDOWS - DIAGNOSIS	8N-33
TESTING, PRELIMINARY - DIAGNOSIS	21-71
TESTING, PRELIMINARY CHECKS - DIAGNOSIS	7-4
TESTING, PRELIMINARY DIAGNOSIS - DIAGNOSIS	21-244
TESTING, PRESSURE GAUGES - DIAGNOSIS	22-7
TESTING PROCEDURES, HEADLAMP - DIAGNOSIS	8L-16
TESTING, PROPELLER SHAFT - DIAGNOSIS	3-2
TESTING, PUMP LEAKAGE - DIAGNOSIS	19-37
TESTING, RADIATOR PRESSURE CAP - DIAGNOSIS	7-53
TESTING, RADIO - DIAGNOSIS	8A-14
TESTING, REAR DISC BRAKE ROTOR - DIAGNOSIS	5-27
TESTING, REAR POWER OUTLET - DIAGNOSIS	8W-13
TESTING, REAR SEAL AREA LEAKS - DIAGNOSIS	9-128,9-9
TESTING, REAR SUSPENSION - DIAGNOSISI	2-16
TESTING, REAR WINDOW DEFOGGER GRID - DIAGNOSIS	8G-15
TESTING, REAR WINDOW DEFOGGER RELAY - DIAGNOSIS	8G-17
TESTING, REAR WINDOW DEFOGGER SWITCH - DIAGNOSIS	8G-19
TESTING, REAR WIPER & WASHER SYSTEM - DIAGNOSIS	8R-33
TESTING, RED BRAKE WARNING LAMP - DIAGNOSIS	5-7
TESTING, REFRIGERANT SYSTEM LEAKS - DIAGNOSIS	24-53
TESTING, REMOTE KEYLESS ENTRY SYSTEM - DIAGNOSIS	8N-6
TESTING, REMOTE KEYLESS ENTRY TRANSMITTER - DIAGNOSIS	8N-8
TESTING, REMOTE SWITCHES - DIAGNOSIS	8A-18
TESTING, RIGHT MULTI-FUNCTION SWITCH - DIAGNOSIS	8R-18
TESTING, ROAD TEST - DIAGNOSIS	8P-2
TESTING, ROAD TESTING - DIAGNOSIS	21-244, 21-72
TESTING, SEAT BELT SWITCH - DIAGNOSIS	8O-25
TESTING, SEAT SWITCH - DIAGNOSIS	8N-20, 8N-27
TESTING, SENTRY KEY IMMOBILIZER SYSTEM - DIAGNOSIS	8Q-5
TESTING, SERPENTINE DRIVE BELT - DIAGNOSIS	7-18,7-21
TESTING, SERVICE DIAGNOSIS - LUBRICATION - DIAGNOSIS	9-68
TESTING, SERVICE DIAGNOSIS - MECHANICAL - DIAGNOSIS	9-67
TESTING, SERVICE DIAGNOSIS - PERFORMANCE - DIAGNOSIS	9-65
TESTING, SERVICE DIAGNOSIS (MECHANICAL) - DIAGNOSIS	9-6
TESTING, SERVICE DIAGNOSIS (PERFORMANCE) - DIAGNOSIS	9-4
TESTING, SIDEVIEW MIRROR - DIAGNOSIS	8N-14
TESTING, SPARK PLUG CONDITIONS - DIAGNOSIS	8I-13
TESTING, SPEAKER - DIAGNOSIS	8A-20
TESTING, STARTER MOTOR - DIAGNOSIS	8F-40
TESTING, STARTER RELAY - DIAGNOSIS	8F-42
TESTING, STARTING SYSTEM - DIAGNOSIS	8F-34
TESTING, STEERING FLOW AND PRESSURE - DIAGNOSIS	19-4
TESTING, SUSPENSION AND STEERING SYSTEM - DIAGNOSIS	2-2
TESTING, THERMOSTAT - DIAGNOSIS	7-37
TESTING, TIRE AND WHEEL RUNOUT - DIAGNOSIS	22-1
TESTING, TIRE NOISE OR VIBRATION - DIAGNOSIS	22-7
TESTING, TIRE WEAR PATTERNS - DIAGNOSIS	22-7
TESTING, TRAC-LOK™ - DIAGNOSIS	3-114,3-77
TESTING, TRANS OIL COOLER FLOW - DIAGNOSIS	7-55
TESTING, TRANSFER CASE - NV242 - DIAGNOSIS	21-2
TESTING, TRANSFER CASE - NV247 - DIAGNOSIS	21-39
TESTING, TREAD WEAR INDICATORS - DIAGNOSIS	22-7
TESTING, TURN SIGNAL & HAZARD WARNING SYSTEM - DIAGNOSIS	8L-3
TESTING, TURN SIGNAL INDICATORS - DIAGNOSIS	8J-31
TESTING, UNIVERSAL GARAGE DOOR OPENER - DIAGNOSIS	8M-10
TESTING, VACUUM LINES - DIAGNOSIS	25-32
TESTING, VACUUM SUPPLY TEST - DIAGNOSIS	8P-8
TESTING, VACUUM SYSTEM - DIAGNOSIS	24-10
TESTING, VEHICLE THEFT SECURITY SYSTEM - DIAGNOSIS	8Q-4
TESTING, VISCOUS FAN DRIVE - DIAGNOSIS	7-40
TESTING, VISUAL INSPECTION - DIAGNOSIS	14-27
TESTING, VTSS INDICATOR - DIAGNOSIS	8Q-13
TESTING, WATER LEAKS - DIAGNOSIS	23-1
TESTING, WATER PUMP - DIAGNOSIS	7-48,7-50
TESTING, WHEEL INSPECTION - DIAGNOSIS	22-9
TESTING, WIND NOISE - DIAGNOSIS	23-2
TESTING, WINDOW DEFOGGER - DIAGNOSIS	8G-14
TESTING, WINDOW MOTOR - DIAGNOSIS	8N-37

Description	Group-Page
TESTING, WIPER HIGH/LOW RELAY - DIAGNOSIS	8R-25
TESTING, WIPER ON/OFF RELAY - DIAGNOSIS	8R-28
TESTING, WIRING HARNESS - DIAGNOSIS	8W-4
TESTING–ELECTRONIC VEHICLE INFORMATION CENTER, ELECTRONIC VEHICLE INFO CENTER - DIAGNOSIS	8M-8
TETHER - INSTALLATION, CHILD	8O-8
TETHER - REMOVAL, CHILD	8O-8
TETSING, FRONT DISC BRAKE ROTOR - DIAGNOSIS	5-26
THEFT SECURITY SYSTEM - DESCRIPTION, VEHICLE	8Q-1
THEFT SECURITY SYSTEM - DIAGNOSIS AND TESTING, VEHICLE	8Q-4
THEFT SECURITY SYSTEM - OPERATION, VEHICLE	8Q-3
THERMAL GUARD - DESCRIPTION	8F-26
THERMAL GUARD - INSTALLATION	8F-27
THERMAL GUARD - OPERATION	8F-26
THERMAL GUARD - REMOVAL	8F-26
THERMOSTAT - DIAGNOSIS AND TESTING	7-37
THERMOSTAT - OPERATION, ENGINE COOLANT	7-36
THOMAS AND BETTS - INSTALLATION, CONNECTOR	8W-10
THOMAS AND BETTS - REMOVAL, CONNECTOR	8W-9
THREAD REPAIR - STANDARD PROCEDURE, ALUMINUM	21-247,21-91
THREADED HOLE REPAIR - DESCRIPTION	Intro.-4
THREADS - STANDARD PROCEDURE, REPAIR DAMAGED OR WORN	9-10,9-70
THROTTLE BODY - DESCRIPTION	14-48
THROTTLE BODY - OPERATION	14-48
THROTTLE POSITION SENSOR - DESCRIPTION	14-51
THROTTLE POSITION SENSOR - OPERATION	14-51
THROTTLE VALVE CABLE - ADJUSTMENTS, TRANSMISSION	21-191
THROTTLE VALVE CABLE - DESCRIPTION	21-191
TIE ROD END - DESCRIPTION	19-34
TIE ROD END - INSTALLATION	19-34
TIE ROD END - OPERATION	19-34
TIE ROD END - REMOVAL	19-34
TIME INDICATOR - DIAGNOSIS AND TESTING, PART	8J-27
TIMER MODULE - DESCRIPTION, BODY CONTROL/CENTRAL	8E-2
TIMER MODULE - INSTALLATION, BODY CONTROL/CENTRAL	8E-7
TIMER MODULE - OPERATION, BODY CONTROL/CENTRAL	8E-4
TIMER MODULE - REMOVAL, BODY CONTROL/CENTRAL	8E-6
TIMING BELT / CHAIN COVER(S) - INSTALLATION	9-146,9-60
TIMING BELT / CHAIN COVER(S) - REMOVAL	9-146,9-59
TIMING BELT/CHAIN AND SPROCKETS - INSPECTION	9-147
TIMING BELT/CHAIN AND SPROCKETS - INSTALLATION	9-148,9-61
TIMING BELT/CHAIN AND SPROCKETS - REMOVAL	9-146,9-60
TIMING CHAIN WEAR - STANDARD PROCEDURE, MEASURING	9-143
TIMING DRIVE SYSTEM - DESCRIPTION	9-140
TIMING DRIVE SYSTEM - OPERATION	9-141
TIMING, SPECIFICATIONS - IGNITION	8I-2
TIMING VERIFICATION - STANDARD PROCEDURE, ENGINE	9-142
TIPS - CLEANING, APPEARANCE	30-16
TIRE - DESCRIPTION, SPARE / TEMPORARY	22-8
TIRE AND WHEEL BALANCE - STANDARD PROCEDURES	22-2
TIRE AND WHEEL RUNOUT - DIAGNOSIS AND TESTING	22-1
TIRE INFLATION PRESSURES - DESCRIPTION	22-6
TIRE NOISE OR VIBRATION - DIAGNOSIS AND TESTING	22-7
TIRE PRESSURE FOR HIGH SPEED - DESCRIPTION	22-6
TIRE PRESSURES - INSPECTION	30-7
TIRE ROTATION - STANDARD PROCEDURES	22-4
TIRE WEAR PATTERNS - DIAGNOSIS AND TESTING	22-7
TIRES - CLEANING	22-8
TIRES - DESCRIPTION	22-5
TIRES - DESCRIPTION, RADIAL-PLY	22-6
TIRES - DESCRIPTION, REPLACEMENT	22-7
TIRES, SPECIFICATIONS	22-8
TO BODY GROUND STRAP - INSTALLATION, ENGINE	8A-17
TO GROUND - STANDARD PROCEDURE, TESTING FOR A SHORT	8W-6
TO GROUND ON FUSES POWERING SEVERAL LOADS - STANDARD PROCEDURE, TESTING FOR SHORT	8W-7
TO USE WIRING DIAGRAMS - DESCRIPTION, HOW	8W-1
TOE POSITION - STANDARD PROCEDURE	2-4
TOOL 6906-B - STANDARD PROCEDURE, COOLER FLUSH USING	7-56
TOOLS - 4.7L ENGINE, SPECIAL	9-78
TOOLS - AUDIO SYSTEMS, SPECIAL	8A-5
TOOLS - AXLE, SPECIAL	3-102,3-30,3-64
TOOLS - BASE BRAKES, SPECIAL	5-6
TOOLS - BODY, SPECIAL	23-92
TOOLS - COOLING, SPECIAL	7-16
TOOLS - FRONT SUSPENSION, SPECIAL	2-7
TOOLS - FUEL SYSTEM, SPECIAL	14-5
TOOLS - OVERHEAD CONSOLE SYSTEMS, SPECIAL	8M-6
TOOLS - POWER DISTRIBUTION SYSTEMS, SPECIAL	8W-2
TOOLS - POWER STEERING GEAR, SPECIAL	19-18
TOOLS - POWER STEERING PUMP, SPECIAL	19-39
TOOLS - RE TRANSMISSIONS, SPECIAL	21-121
TOOLS - REAR SUSPENSION, SPECIAL	2-17
TOOLS - RFE TRANSMISSION, SPECIAL	21-284
TOOLS - SPECIAL TOOLS, SPECIAL	3-7
TOOLS - STEERING COLUMN, SPECIAL	19-11
TOOLS - STEERING LINKAGE, SPECIAL	19-32
TOOLS, AIRBAG SYSTEM - SPECIAL	8O-6
TOOLS, SPECIAL TOOLS - SPECIAL	3-7
TOOLS, WIRING/TERMINAL - SPECIAL	8W-8
TOP COVER - INSTALLATION, INSTRUMENT PANEL	23-141
TOP COVER - REMOVAL, INSTRUMENT PANEL	23-141
TOP PAD - INSTALLATION, INSTRUMENT PANEL	23-143
TOP PAD - REMOVAL, INSTRUMENT PANEL	23-141
TORQUE, 4.0L ENGINE	9-17
TORQUE CHART, SPECIFICATIONS	5-37,5-6
TORQUE CHART, SPECIFICATIONS	19-10,19-32, 19-39
TORQUE CHART, SPECIFICATIONS	2-17,2-6
TORQUE CHART, SPECIFICATIONS	22-10
TORQUE CONVERTER - DESCRIPTION	21-193, 21-327
TORQUE CONVERTER - INSTALLATION	21-198, 21-332
TORQUE CONVERTER - OPERATION	21-197, 21-331
TORQUE CONVERTER - REMOVAL	21-197, 21-332
TORQUE CONVERTER DRAINBACK VALVE - DESCRIPTION	21-198
TORQUE CONVERTER DRAINBACK VALVE - OPERATION	21-198
TORQUE CONVERTER DRAINBACK VALVE - STANDARD PROCEDURES	21-198
TORQUE EVAPORATION SYSTEM, SPECIFICATIONS	25-26
TORQUE, FUEL DELIVERY	14-4
TORQUE, FUEL INJECTION	14-34
TORQUE, GAS POWERED	8F-29
TORQUE, IGNITION SYSTEM	8I-3
TORQUE REFERENCES - DESCRIPTION	Intro.-7
TORQUE, SPECIFICATIONS	7-16
TORQUE, SPECIFICATIONS	9-78
TORQUE, SPECIFICATIONS	11-3
TORQUE SPECIFICATIONS, SPECIFICATIONS	23-92
TORQUE SPECIFICATIONS, SPECIFICATIONS	24-8
TORQUE, SPEED CONTROL	8P-2
TORQUE, STARTER	8F-39
TOUCH-UP - DESCRIPTION, PAINT	23-170
TOW HOOK - INSTALLATION, FRONT	13-7
TOW HOOK - INSTALLATION, REAR	13-7
TOW HOOK - REMOVAL, FRONT	13-7
TOW HOOK - REMOVAL, REAR	13-7
TOW HOOKS - DESCRIPTION, EMERGENCY	0-14
TOWING - STANDARD PROCEDURES	0-14
TRACK - DESCRIPTION, POWER SEAT	8N-30
TRACK - DIAGNOSIS & TESTING, POWER SEAT	8N-31
TRACK - OPERATION, POWER SEAT	8N-31
TRACK & RECLINER ASSEMBLY - INSTALLATION, SEAT	23-176
TRACK & RECLINER ASSEMBLY - REMOVAL, SEAT	23-176
TRACK ADJUSTER - INSTALLATION, SEAT	23-176
TRACK ADJUSTER - REMOVAL, SEAT	23-176
TRACK BAR - DESCRIPTION	2-13
TRACK BAR - INSTALLATION	2-13
TRACK BAR - OPERATION	2-13
TRACK BAR - REMOVAL	2-13
TRAC-LOC™ - ASSEMBLY, DIFFERENTIAL	3-79
TRAC-LOC™ - DISASSEMBLY, DIFFERENTIAL	3-77
TRAC-LOK™ - ASSEMBLY, DIFFERENTIAL	3-117
TRAC-LOK™ - DIAGNOSIS AND TESTING	3-114, 3-77
TRAC-LOK™ - DISASSEMBLY, DIFFERENTIAL	3-115
TRAILER HITCH - INSTALLATION	13-8
TRAILER HITCH - REMOVAL	13-8
TRANS COOLER - DESCRIPTION	7-56
TRANS OIL COOLER FLOW - DIAGNOSIS AND TESTING	7-55
TRANS OVERTEMP INDICATOR - DESCRIPTION	8J-29
TRANS OVERTEMP INDICATOR - OPERATION	8J-30
TRANSFER CASE - DESCRIPTION	0-6
TRANSFER CASE - NV242 - ASSEMBLY	21-18
TRANSFER CASE - NV242 - CLEANING	21-13
TRANSFER CASE - NV242 - DESCRIPTION	0-4
TRANSFER CASE - NV242 - DESCRIPTION	21-1
TRANSFER CASE - NV242 - DIAGNOSIS AND TESTING	21-2
TRANSFER CASE - NV242 - DISASSEMBLY	21-3
TRANSFER CASE - NV242 - INSPECTION	21-14
TRANSFER CASE - NV242 - INSTALLATION	21-31
TRANSFER CASE - NV242 - OPERATION	21-2
TRANSFER CASE - NV242 - REMOVAL	21-3
TRANSFER CASE - NV247 - ASSEMBLY	21-48
TRANSFER CASE - NV247 - CLEANING	21-47
TRANSFER CASE - NV247 - DESCRIPTION	0-4
TRANSFER CASE - NV247 - DESCRIPTION	21-38
TRANSFER CASE - NV247 - DIAGNOSIS AND TESTING	21-39
TRANSFER CASE - NV247 - DISASSEMBLY	21-40
TRANSFER CASE - NV247 - INSPECTION	21-47
TRANSFER CASE - NV247 - INSTALLATION	21-58
TRANSFER CASE - NV247 - OPERATION	21-38
TRANSFER CASE - NV247 - REMOVAL	21-40
TRANSFER CASE, NV242	21-32,21-33
TRANSFER CASE, NV247	21-59,21-60
TRANSFER CASE SKID PLATE - INSTALLATION	13-8
TRANSFER CASE SKID PLATE - REMOVAL	13-8
TRANSMISSION - 42RE - ASSEMBLY, AUTOMATIC	21-99
TRANSMISSION - 42RE - CLEANING, AUTOMATIC	21-98

Description	Group-Page
TRANSMISSION - 42RE - DESCRIPTION, AUTOMATIC	21-66
TRANSMISSION - 42RE - DISASSEMBLY, AUTOMATIC	21-93
TRANSMISSION - 42RE - INSPECTION, AUTOMATIC	21-98
TRANSMISSION - 42RE - INSTALLATION, AUTOMATIC	21-105
TRANSMISSION - 42RE - OPERATION, AUTOMATIC	21-68
TRANSMISSION - 42RE - REMOVAL, AUTOMATIC	21-91
TRANSMISSION - 545RFE - ASSEMBLY, AUTOMATIC	21-254
TRANSMISSION - 545RFE - CLEANING, AUTOMATIC	21-253
TRANSMISSION - 545RFE - DESCRIPTION, AUTOMATIC	21-242
TRANSMISSION - 545RFE - DISASSEMBLY, AUTOMATIC	21-248
TRANSMISSION - 545RFE - INSPECTION, AUTOMATIC	21-254
TRANSMISSION - 545RFE - INSTALLATION, AUTOMATIC	21-261
TRANSMISSION - 545RFE - OPERATION, AUTOMATIC	21-243
TRANSMISSION - 545RFE - REMOVAL, AUTOMATIC	21-247
TRANSMISSION - DIAGNOSIS AND TESTING, AUTOMATIC	21-243,21-71
TRANSMISSION CLUTCH AND BAND OPERATION - DIAGNOSIS AND TESTING, AIR CHECKING	21-77
TRANSMISSION CLUTCH OPERATION - DIAGNOSIS AND TESTING, AIR CHECKING	21-246
TRANSMISSION CONTROL MODULE - DESCRIPTION	8E-23
TRANSMISSION CONTROL MODULE - OPERATION	8E-23
TRANSMISSION CONTROL RELAY - DESCRIPTION	21-333
TRANSMISSION CONTROL RELAY - OPERATION	21-333
TRANSMISSION FILL - STANDARD PROCEDURES	21-139,21-295
TRANSMISSION FLUID - DESCRIPTION, AUTOMATIC	0-4
TRANSMISSION FLUID - OPERATION, AUTOMATIC	0-4
TRANSMISSION RANGE SENSOR - DESCRIPTION	21-333
TRANSMISSION RANGE SENSOR - OPERATION	21-333
TRANSMISSION SHIFT INTERLOCK - ADJUSTMENTS, BRAKE	21-129,21-291
TRANSMISSION SHIFT INTERLOCK - DIAGNOSIS AND TESTING, BRAKE	21-127, 21-290
TRANSMISSION SHIFT INTERLOCK MECHANISM - DESCRIPTION, BRAKE	21-127, 21-289
TRANSMISSION SHIFT INTERLOCK MECHANISM - INSTALLATION, BRAKE	21-128, 21-291
TRANSMISSION SHIFT INTERLOCK MECHANISM - OPERATION, BRAKE	21-127, 21-289
TRANSMISSION SHIFT INTERLOCK MECHANISM - REMOVAL, BRAKE	21-128,21-290
TRANSMISSION SOLENOID/TRS ASSEMBLY - DESCRIPTION	21-334
TRANSMISSION SOLENOID/TRS ASSEMBLY - INSTALLATION	21-335
TRANSMISSION SOLENOID/TRS ASSEMBLY - OPERATION	21-334
TRANSMISSION SOLENOID/TRS ASSEMBLY - REMOVAL	21-334
TRANSMISSION, SPECIAL TOOLS - RFE	21-284
TRANSMISSION, SPECIFICATIONS	21-119, 21-283
TRANSMISSION TEMPERATURE SENSOR - DESCRIPTION	21-199,21-335
TRANSMISSION TEMPERATURE SENSOR - OPERATION	21-199,21-335
TRANSMISSION THROTTLE VALVE CABLE - ADJUSTMENTS	21-191
TRANSMISSIONS, SPECIAL TOOLS - RE	21-121
TRANSMISSION/TRANSFER CASE - INSPECTION	30-12
TRANSMITTER - DESCRIPTION, REMOTE KEYLESS ENTRY	8N-8
TRANSMITTER - DESCRIPTION, UNIVERSAL	8M-10
TRANSMITTER - DIAGNOSIS AND TESTING, REMOTE KEYLESS ENTRY	8N-8
TRANSMITTER - OPERATION, REMOTE KEYLESS ENTRY	8N-8
TRANSMITTER - OPERATION, UNIVERSAL	8M-10
TRANSMITTER BATTERIES - STANDARD PROCEDURE, RKE	8N-8
TRANSMITTER PROGRAMMING - STANDARD PROCEDURE, RKE	8N-8
TRANSPONDER KEY - DESCRIPTION	8Q-11
TRANSPONDER KEY - OPERATION	8Q-12
TRANSPONDER PROGRAMMING - STANDARD PROCEDURES, SENTRY KEY	8Q-7
TRAY - DESCRIPTION, BATTERY	8F-25
TRAY - INSTALLATION, BATTERY	8F-26
TRAY - OPERATION, BATTERY	8F-25
TRAY - REMOVAL, BATTERY	8F-25
TREAD WEAR INDICATORS - DIAGNOSIS AND TESTING	22-7
TRIM - INSTALLATION, A-PILLAR	23-158
TRIM - INSTALLATION, B-PILLAR LOWER	23-159
TRIM - INSTALLATION, B-PILLAR UPPER	23-159
TRIM - INSTALLATION, COWL	23-161
TRIM - INSTALLATION, C-PILLAR	23-162
TRIM - INSTALLATION, DOOR SILL	23-163
TRIM - INSTALLATION, D-PILLAR	23-163
TRIM - INSTALLATION, LIFTGATE OPENING UPPER	23-167
TRIM - REMOVAL, A-PILLAR	23-158
TRIM - REMOVAL, B-PILLAR LOWER	23-159
TRIM - REMOVAL, B-PILLAR UPPER	23-159
TRIM - REMOVAL, COWL	23-161
TRIM - REMOVAL, C-PILLAR	23-162
TRIM - REMOVAL, DOOR SILL	23-163
TRIM - REMOVAL, D-PILLAR	23-163
TRIM - REMOVAL, LIFTGATE OPENING UPPER	23-167
TRIM BEZEL - DRIVER - INSTALLATION, INTRUMENT PANEL	23-154
TRIM BEZEL - DRIVER - REMOVAL, INTRUMENT PANEL	23-154
TRIM BEZEL - PASSENGER - INSTALLATION, INSTRUMENT PANEL	23-155
TRIM BEZEL - PASSENGER - REMOVAL, INSTRUMENT PANEL	23-155
TRIM PANEL - INSTALLATION	23-105,23-111
TRIM PANEL - INSTALLATION, LIFTGATE	23-98
TRIM PANEL - INSTALLATION, LOWER LIFTGATE OPENING	23-98
TRIM PANEL - INSTALLATION, QUARTER	23-168
TRIM PANEL - REMOVAL	23-104,23-111
TRIM PANEL - REMOVAL, LIFTGATE	23-97
TRIM PANEL - REMOVAL, LOWER LIFTGATE OPENING	23-98
TRIM PANEL - REMOVAL, QUARTER	23-168
TRIP COMPUTER/MAINTENANCE REMINDER - INSPECTION	30-13
TRIP DEFINITION - DESCRIPTION	25-18
TROUBLE CODES - DESCRIPTION, DIAGNOSTIC	25-2
TUBE - DESCRIPTION, A/C ORIFICE	24-67
TUBE - INSTALLATION, WATER PUMP INLET	7-54
TUBE - OPERATION, A/C ORIFICE	24-68
TUBE - REMOVAL, A/C ORIFICE	24-68
TUBE - REMOVAL, WATER PUMP INLET	7-54
TUBE AXLE - INSTALLATION, FRONT	3-15
TUBE AXLE - REMOVAL, FRONT	3-15
TUNNEL BRACKET - INSTALLATION, INSTRUMENT PANEL CENTER FLOOR	23-148
TUNNEL BRACKET - REMOVAL, INSTRUMENT PANEL CENTER FLOOR	23-147
TURN AND EMERGENCY SIGNALS - INSPECTION	30-14
TURN SIGNAL & HAZARD WARNING SYSTEM - DESCRIPTION	8L-2
TURN SIGNAL & HAZARD WARNING SYSTEM - DIAGNOSIS AND TESTING	8L-3
TURN SIGNAL & HAZARD WARNING SYSTEM - OPERATION	8L-3
TURN SIGNAL CANCEL CAM - DESCRIPTION	8L-29
TURN SIGNAL CANCEL CAM - OPERATION	8L-29
TURN SIGNAL INDICATORS - DESCRIPTION	8J-30
TURN SIGNAL INDICATORS - DIAGNOSIS AND TESTING	8J-31
TURN SIGNAL INDICATORS - OPERATION	8J-30
TURNING LOOP ADJUSTER - INSTALLATION, SEAT BELT	8O-27
TURNING LOOP ADJUSTER - REMOVAL, SEAT BELT	8O-26
TURNING LOOP HEIGHT ADJUSTER KNOB - INSTALLATION	8O-28
TURNING LOOP HEIGHT ADJUSTER KNOB - REMOVAL	8O-27
U-JOINT - INSTALLATION, AXLE	3-36
U-JOINT - REMOVAL, AXLE	3-35
UNIT - ADJUSTMENTS, HEADLAMP	8L-18
UNIT - ASSEMBLY, OVERDRIVE	21-162
UNIT - CLEANING, OVERDRIVE	21-161
UNIT - DIAGNOSIS AND TESTING, FUEL GAUGE SENDING	14-7
UNIT - DISASSEMBLY, OVERDRIVE	21-154
UNIT - FOG LAMP ADJUSTMENT, FOG LAMP	8L-11
UNIT - INSPECTION, OVERDRIVE	21-161
UNIT - INSTALLATION, FOG LAMP	8L-11
UNIT - INSTALLATION, HEADLAMP	8L-17
UNIT - INSTALLATION, LICENSE PLATE LAMP	8L-20
UNIT - INSTALLATION, OVERDRIVE	21-171
UNIT - REMOVAL, FOG LAMP	8L-11
UNIT - REMOVAL, HEADLAMP	8L-17
UNIT - REMOVAL, LICENSE PLATE LAMP	8L-20
UNIT - REMOVAL, OVERDRIVE	21-153
UNIT / SENSOR - DESCRIPTION, FUEL LEVEL SENDING	14-7
UNIT / SENSOR - INSTALLATION, FUEL LEVEL SENDING	14-8
UNIT / SENSOR - OPERATION, FUEL LEVEL SENDING	14-7
UNIT / SENSOR - REMOVAL, FUEL LEVEL SENDING	14-8
UNIVERSAL GARAGE DOOR OPENER - DIAGNOSIS & TESTING	8M-10
UNIVERSAL JOINTS - ASSEMBLY, DOUBLE CARDAN	3-11
UNIVERSAL JOINTS - ASSEMBLY, SINGLE CARDAN	3-9
UNIVERSAL JOINTS - DISASSEMBLY, DOUBLE CARDAN	3-10
UNIVERSAL JOINTS - DISASSEMBLY, SINGLE CARDAN	3-9
UNIVERSAL TRANSMITTER - DESCRIPTION	8M-10
UNIVERSAL TRANSMITTER - OPERATION	8M-10
UNLOCK SWITCH - DESCRIPTION, DOOR CYLINDER LOCK	8N-7
UNLOCK SWITCH - OPERATION, DOOR CYLINDER LOCK	8N-7
UNSCHEDULED INSPECTION, MAINTENANCE SCHEDULES	0-7
UP GLASS AJAR SWITCH - DESCRIPTION, FLIP	8L-32
UP GLASS AJAR SWITCH - OPERATION, FLIP	8L-33
UPPER - INSTALLATION, INSTRUMENT PANEL CENTER BEZEL	23-147
UPPER - REMOVAL, INSTRUMENT PANEL CENTER BEZEL	23-147
UPPER BALL JOINT - INSTALLATION	2-21
UPPER BALL JOINT - REMOVAL	2-14,2-20
UPPER CONTROL ARM - DESCRIPTION	2-15, 2-21
UPPER CONTROL ARM - INSTALLATION	2-15, 2-22
UPPER CONTROL ARM - OPERATION	2-15,2-21
UPPER CONTROL ARM - REMOVAL	2-15,2-21
UPPER SUSPENSION ARM, BUSHINGS, AND BALL JOINT - DESCRIPTION	2-20
UPPER SUSPENSION ARM, BUSHINGS, AND BALL JOINT - OPERATION	2-20
UPPER TRIM - INSTALLATION, B-PILLAR	23-159

Description	Group-Page
UPPER TRIM - INSTALLATION, LIFTGATE OPENING	23-167
UPPER TRIM - REMOVAL, B-PILLAR	23-159
UPPER TRIM - REMOVAL, LIFTGATE OPENING	23-167
USAGE - DESCRIPTION, FASTENER	Intro.-4
USE WIRING DIAGRAMS - DESCRIPTION, HOW TO	8W-1
USING TOOL 6906-B - STANDARD PROCEDURE, COOLER FLUSH	7-56
V-8 ENGINE - ENGINE FIRING ORDER, 4.7L	8I-2
V-8 ENGINE - IGNITION COIL RESISTANCE, 4.7L	8I-2
VACUUM ACTUATOR - INSTALLATION, HEAT/DEFROST DOOR	24-33
VACUUM ACTUATOR - INSTALLATION, PANEL/DEFROST DOOR	24-33
VACUUM ACTUATOR - INSTALLATION, RECIRCULATION DOOR	24-34
VACUUM ACTUATOR - REMOVAL, HEAT/DEFROST DOOR	24-32
VACUUM ACTUATOR - REMOVAL, PANEL/DEFROST DOOR	24-32
VACUUM ACTUATOR - REMOVAL, RECIRCULATION DOOR	24-33
VACUUM CHECK VALVE - DESCRIPTION	24-34
VACUUM CHECK VALVE - INSTALLATION	24-35
VACUUM CHECK VALVE - OPERATION	24-34
VACUUM CHECK VALVE - REMOVAL	24-35
VACUUM LINES - DIAGNOSIS AND TESTING	25-32
VACUUM RESERVOIR - DESCRIPTION	24-35
VACUUM RESERVOIR - DESCRIPTION	8P-7
VACUUM RESERVOIR - INSTALLATION	24-35
VACUUM RESERVOIR - INSTALLATION	8P-8
VACUUM RESERVOIR - OPERATION	24-35
VACUUM RESERVOIR - OPERATION	8P-7
VACUUM RESERVOIR - REMOVAL	24-35
VACUUM RESERVOIR - REMOVAL	8P-8
VACUUM SUPPLY TEST - DIAGNOSIS AND TESTING	8P-8
VACUUM SYSTEM - DIAGNOSIS AND TESTING	24-10
VALVE - 4.7L - INSTALLATION, PCV	25-32
VALVE - 4.7L - REMOVAL, PCV	25-31
VALVE - DESCRIPTION, FRONT CHECK	8R-8
VALVE - DESCRIPTION, HIGH PRESSURE RELIEF	24-57
VALVE - DESCRIPTION, ROLLOVER	14-25
VALVE - DESCRIPTION, SOLENOID SWITCH	21-326
VALVE - DESCRIPTION, TORQUE CONVERTER DRAINBACK	21-198
VALVE - DESCRIPTION, VACUUM CHECK	24-34
VALVE - INSTALLATION, FRONT CHECK	8R-9
VALVE - INSTALLATION, SPOOL	19-25
VALVE - INSTALLATION, VACUUM CHECK	24-35
VALVE - OPERATION, FRONT CHECK	8R-8
VALVE - OPERATION, HIGH PRESSURE RELIEF	24-57
VALVE - OPERATION, ROLLOVER	14-25
VALVE - OPERATION, SOLENOID SWITCH	21-326
VALVE - OPERATION, TORQUE CONVERTER DRAINBACK	21-198
VALVE - OPERATION, VACUUM CHECK	24-34
VALVE - REMOVAL, FRONT CHECK	8R-9
VALVE - REMOVAL, ROLLOVER	14-26
VALVE - REMOVAL, SPOOL	19-25
VALVE - REMOVAL, VACUUM CHECK	24-35
VALVE - STANDARD PROCEDURES, TORQUE CONVERTER DRAINBACK	21-198
VALVE BODY - ADJUSTMENTS	21-239
VALVE BODY - ASSEMBLY	21-230,21-340
VALVE BODY - CLEANING	21-229,21-338
VALVE BODY - DESCRIPTION	21-199,21-335
VALVE BODY - DISASSEMBLY	21-217,21-337
VALVE BODY - INSPECTION	21-229,21-338
VALVE BODY - INSTALLATION	21-239,21-341
VALVE BODY - OPERATION	21-204,21-335
VALVE BODY - REMOVAL	21-216,21-337
VALVE CABLE - ADJUSTMENTS, TRANSMISSION THROTTLE	21-191
VALVE CABLE - DESCRIPTION, THROTTLE	21-191
VALVE GUIDES - DESCRIPTION	9-82,9-96
VALVE SERVICE - STANDARD PROCEDURE	9-23
VALVE SPRING TENSION TEST - STANDARD PROCEDURE	9-28
VALVE SPRINGS - DESCRIPTION	9-107,9-28, 9-96
VALVE SPRINGS - INSTALLATION	9-29
VALVE SPRINGS - REMOVAL	9-28
VALVE STEM SEALS - DESCRIPTION	9-107,9-28, 9-96
VALVE/PCV SYSTEM - 4.7L - DIAGNOSIS AND TESTING, PCV	25-30
VALVES & SEATS - DESCRIPTION, INTAKE/EXHAUST	9-103,9-23,9-93
VALVES & SEATS - INSTALLATION, INTAKE/EXHAUST	9-105,9-25,9-94
VALVES & SEATS - REMOVAL, INTAKE/EXHAUST	9-104,9-25,9-93
VANITY LAMP - INSTALLATION	8L-36
VANITY LAMP - REMOVAL	8L-36
VAPOR CANISTER - DESCRIPTION	25-32
VAPOR CANISTER - INSTALLATION	25-33
VAPOR CANISTER - REMOVAL	25-32
VARIATION ADJUSTMENT - STANDARD PROCEDURE, COMPASS	8M-4
VECI LABEL - DESCRIPTION	Intro.-9
VEHICLE IDENTIFICATION NUMBER - DESCRIPTION	Intro.-9
VEHICLE INFO CENTER - DESCRIPTION, ELECTRONIC	8M-6
VEHICLE INFO CENTER - DIAGNOSIS & TESTING–ELECTRONIC VEHICLE INFORMATION CENTER, ELECTRONIC	8M-8
VEHICLE INFO CENTER - INSTALLATION, ELECTRONIC	8M-9
VEHICLE INFO CENTER - OPERATION, ELECTRONIC	8M-8
VEHICLE INFO CENTER - REMOVAL, ELECTRONIC	8M-9
VEHICLE INFORMATION CENTER, ELECTRONIC VEHICLE INFO CENTER - DIAGNOSIS & TESTING–ELECTRONIC	8M-8
VEHICLE INFORMATION CENTER PROGRAMMING - STANDARD PROCEDURE, ELECTRONIC	8M-2
VEHICLE PREPARATION - DESCRIPTION, THE IMPORTANCE OF CAREFUL NEW	30-1
VEHICLE PREPARATION FORM, FINAL STEPS - NEW	30-17
VEHICLE SAFETY CERTIFICATION LABEL - DESCRIPTION	Intro.-10
VEHICLE THEFT SECURITY SYSTEM - DESCRIPTION	8Q-1
VEHICLE THEFT SECURITY SYSTEM - DIAGNOSIS AND TESTING	8Q-4
VEHICLE THEFT SECURITY SYSTEM - OPERATION	8Q-3
VERIFICATION - STANDARD PROCEDURE, ENGINE TIMING	9-142
VERIFICATION TEST - STANDARD PROCEDURE	8O-5
VIBRATION - DIAGNOSIS AND TESTING, TIRE NOISE OR	22-7
VIBRATION DAMPER - INSTALLATION	9-122, 9-50
VIBRATION DAMPER - REMOVAL	9-121,9-49
VIEW MIRROR - DESCRIPTION, OUTSIDE REAR	8N-11
VIEW MIRROR - DESCRIPTION, REAR	8N-11
VIEW MIRROR - INSTALLATION, REAR	23-168
VIEW MIRROR - INSTALLATION, SIDE	23-120
VIEW MIRROR - OPERATION, OUTSIDE REAR	8N-12
VIEW MIRROR - OPERATION, REAR	8N-12
VIEW MIRROR - REMOVAL, REAR	23-168
VIEW MIRROR - REMOVAL, SIDE	23-120
VIEW MIRROR GLASS - INSTALLATION, SIDE	23-120
VIEW MIRROR GLASS - REMOVAL, SIDE	23-119
VISCOUS CLUTCH - 4.0L - DESCRIPTION, FAN DRIVE	7-39
VISCOUS CLUTCH - 4.0L - OPERATION, FAN DRIVE	7-40
VISCOUS FAN DRIVE - DIAGNOSIS AND TESTING	7-40
VISOR - INSTALLATION, SUN	23-169
VISOR - REMOVAL, SUN	23-169
VISUAL - INSPECTION	30-7
VISUAL INSPECTION - DIAGNOSIS AND TESTING	14-27
VOLT SUPPLIES - DESCRIPTION, 5	8E-18
VOLT SUPPLIES - OPERATION, 5	8E-19
VOLTAGE DROP - STANDARD PROCEDURE, TESTING FOR A	8W-7
VOLTAGE GAUGE - DESCRIPTION	8J-31
VOLTAGE GAUGE - OPERATION	8J-31
VOLTAGE POTENTIAL - STANDARD PROCEDURE, TESTING	8W-6
VOLTAGE REGULATOR - DESCRIPTION	8F-32
VOLTAGE REGULATOR - OPERATION	8F-32
VOLTAGE TEST - STANDARD PROCEDURE, OPEN-CIRCUIT	8F-14
VOLUME CHECK - STANDARD PROCEDURES, OIL PUMP	21-147,21-315
VTSS INDICATOR - DESCRIPTION	8Q-12
VTSS INDICATOR - DIAGNOSIS AND TESTING	8Q-13
VTSS INDICATOR - OPERATION	8Q-13
WAIT-TO-START INDICATOR - DESCRIPTION	8J-32
WAIT-TO-START INDICATOR - OPERATION	8J-32
WARNING INDICATOR SWITCH - DESCRIPTION, RED BRAKE	5-7
WARNING INDICATOR SWITCH - OPERATION, RED BRAKE	5-7
WARNING, AIRBAG SYSTEM	8O-3
WARNING LAMP - DIAGNOSIS AND TESTING, RED BRAKE	5-7
WARNING, REAR SUSPENSION	2-16
WARNING SYSTEM - DESCRIPTION, CHIME	8B-1
WARNING SYSTEM - DESCRIPTION, TURN SIGNAL & HAZARD	8L-2
WARNING SYSTEM - DIAGNOSIS AND TESTING, CHIME	8B-3
WARNING SYSTEM - DIAGNOSIS AND TESTING, TURN SIGNAL & HAZARD	8L-3
WARNING SYSTEM - OPERATION, CHIME	8B-2
WARNING SYSTEM - OPERATION, TURN SIGNAL & HAZARD	8L-3
WARNINGS AND CAUTIONS - STANDARD PROCEDURES, SERVICE	2-6
WARNINGS AND CAUTIONS, COLUMN - SERVICE	19-6
WARNINGS, GENERAL	8W-4
WASHER FLUID LEVEL SWITCH - DESCRIPTION	8R-21
WASHER FLUID LEVEL SWITCH - INSTALLATION	8R-22
WASHER FLUID LEVEL SWITCH - OPERATION	8R-21
WASHER FLUID LEVEL SWITCH - REMOVAL	8R-21
WASHER HOSES/TUBES - DESCRIPTION, FRONT	8R-9
WASHER HOSES/TUBES - DESCRIPTION, REAR	8R-36
WASHER HOSES/TUBES - OPERATION, FRONT	8R-10
WASHER HOSES/TUBES - OPERATION, REAR	8R-36
WASHER NOZZLE - DESCRIPTION, FRONT	8R-10
WASHER NOZZLE - DESCRIPTION, REAR	8R-37
WASHER NOZZLE - INSTALLATION, FRONT	8R-11
WASHER NOZZLE - INSTALLATION, REAR	8R-38
WASHER NOZZLE - OPERATION, FRONT	8R-10
WASHER NOZZLE - OPERATION, REAR	8R-37
WASHER NOZZLE - REMOVAL, FRONT	8R-10
WASHER NOZZLE - REMOVAL, REAR	8R-37
WASHER PUMP/MOTOR - DESCRIPTION, FRONT	8R-11
WASHER PUMP/MOTOR - DESCRIPTION, REAR	8R-38
WASHER PUMP/MOTOR - INSTALLATION, FRONT	8R-12
WASHER PUMP/MOTOR - INSTALLATION, REAR	8R-38
WASHER PUMP/MOTOR - OPERATION, FRONT	8R-11
WASHER PUMP/MOTOR - OPERATION, REAR	8R-38
WASHER PUMP/MOTOR - REMOVAL, FRONT	8R-12

Description	Group-Page
WASHER PUMP/MOTOR - REMOVAL, REAR	8R-38
WASHER RESERVOIR - DESCRIPTION	8R-22
WASHER RESERVOIR - INSTALLATION	8R-24
WASHER RESERVOIR - OPERATION	8R-23
WASHER RESERVOIR - REMOVAL	8R-23
WASHER SYSTEM - CLEANING, FRONT WIPER	8R-7
WASHER SYSTEM - CLEANING, REAR WIPER	8R-34
WASHER SYSTEM - DIAGNOSIS AND TESTING, FRONT WIPER	8R-4
WASHER SYSTEM - DIAGNOSIS AND TESTING, REAR WIPER	8R-33
WASHER SYSTEM - INSPECTION, FRONT WIPER	8R-7
WASHER SYSTEM - INSPECTION, REAR WIPER	8R-35
WATER LEAKS - DIAGNOSIS AND TESTING	23-1
WATER PUMP - 4.0L - CLEANING	7-52
WATER PUMP - 4.0L - DESCRIPTION	7-49
WATER PUMP - 4.0L - INSPECTION	7-52
WATER PUMP - 4.0L - INSTALLATION	7-52
WATER PUMP - 4.0L - REMOVAL	7-50
WATER PUMP - 4.7L - CLEANING	7-49
WATER PUMP - 4.7L - INSPECTION	7-49
WATER PUMP - 4.7L - INSTALLATION	7-49
WATER PUMP - 4.7L - REMOVAL	7-48
WATER PUMP - DESCRIPTION	7-47
WATER PUMP - DIAGNOSIS AND TESTING	7-48,7-50
WATER PUMP - OPERATION	7-47
WATER PUMP BYPASS - DESCRIPTION	7-47
WATER PUMP BYPASS - OPERATION	7-48
WATER PUMP INLET TUBE - INSTALLATION	7-54
WATER PUMP INLET TUBE - REMOVAL	7-54
WATERDAM - INSTALLATION	23-105,23-111
WATERDAM - REMOVAL	23-105,23-111
WATER-IN-FUEL INDICATOR - DESCRIPTION	8J-33
WATER-IN-FUEL INDICATOR - OPERATION	8J-33
WEAR - STANDARD PROCEDURE, MEASURING TIMING CHAIN	9-143
WEAR INDICATORS - DIAGNOSIS AND TESTING, TREAD	22-7
WEAR PATTERNS - DIAGNOSIS AND TESTING, TIRE	22-7
WEATHERSTRIP - INSTALLATION, COWL	23-187
WEATHERSTRIP - INSTALLATION, FLIP-UP GLASS	23-188
WEATHERSTRIP - INSTALLATION, FRONT DOOR	23-189
WEATHERSTRIP - INSTALLATION, FRONT DOOR GLASS RUN	23-187
WEATHERSTRIP - INSTALLATION, FRONT DOOR INNER BELT	23-187
WEATHERSTRIP - INSTALLATION, FRONT DOOR OUTER BELT	23-188
WEATHERSTRIP - INSTALLATION, FRONT DOOR SECOND	23-188
WEATHERSTRIP - INSTALLATION, LIFTGATE OPENING	23-190
WEATHERSTRIP - INSTALLATION, REAR DOOR	23-191
WEATHERSTRIP - INSTALLATION, REAR DOOR INNER BELT	23-190
WEATHERSTRIP - INSTALLATION, REAR DOOR OUTER BELT	23-190
WEATHERSTRIP - INSTALLATION, REAR DOOR SECONDARY	23-191
WEATHERSTRIP - REMOVAL, COWL	23-187
WEATHERSTRIP - REMOVAL, FLIP-UP GLASS	23-188
WEATHERSTRIP - REMOVAL, FRONT DOOR	23-188
WEATHERSTRIP - REMOVAL, FRONT DOOR GLASS RUN	23-187
WEATHERSTRIP - REMOVAL, FRONT DOOR INNER BELT	23-187
WEATHERSTRIP - REMOVAL, FRONT DOOR OUTER BELT	23-188
WEATHERSTRIP - REMOVAL, FRONT DOOR SECOND	23-188
WEATHERSTRIP - REMOVAL, LIFTGATE OPENING	23-190
WEATHERSTRIP - REMOVAL, REAR DOOR	23-191
WEATHERSTRIP - REMOVAL, REAR DOOR INNER BELT	23-190
WEATHERSTRIP - REMOVAL, REAR DOOR OUTER BELT	23-190
WEATHERSTRIP - REMOVAL, REAR DOOR SECONDARY	23-190
WEATHERSTRIP / RETAINER - INSTALLATION, ROOF RAIL	23-191
WEATHERSTRIP / RETAINER - REMOVAL, ROOF RAIL	23-191
WELD LOCATIONS, SPECIFICATIONS	23-5
WELDING - STANDARD PROCEDURES, DRILLING	23-3
WET SANDING/BUFFING & POLISHING - DESCRIPTION	23-171
WHEEL - INSTALLATION, STEERING	19-14
WHEEL - REMOVAL, STEERING	19-14
WHEEL ALIGNMENT - DESCRIPTION	2-3
WHEEL ALIGNMENT - OPERATION	2-3
WHEEL BALANCE - STANDARD PROCEDURES, TIRE	22-2
WHEEL COVERS - INSTALLATION	30-7
WHEEL INSPECTION - DIAGNOSIS AND TESTING	22-9
WHEEL REPLACEMENT - STANDARD PROCEDURE	22-9
WHEEL RUNOUT - DIAGNOSIS AND TESTING, TIRE	22-1
WHEEL SPEED SENSOR - DESCRIPTION, FRONT	5-38
WHEEL SPEED SENSOR - DESCRIPTION, REAR	5-40
WHEEL SPEED SENSOR - INSTALLATION, FRONT	5-38
WHEEL SPEED SENSOR - INSTALLATION, REAR	5-41
WHEEL SPEED SENSOR - OPERATION, FRONT	5-38
WHEEL SPEED SENSOR - OPERATION, REAR	5-40
WHEEL SPEED SENSOR - REMOVAL, FRONT	5-38
WHEEL SPEED SENSOR - REMOVAL, REAR	5-40
WHEELS - DESCRIPTION	22-8
WIND NOISE - DIAGNOSIS AND TESTING	23-2
WIND NOISE - INSPECTION, SQUEAKS, RATTLES	30-12
WINDOW - INSTALLATION, QUARTER	23-183
WINDOW - REMOVAL, QUARTER	23-183
WINDOW DEFOGGER - DESCRIPTION, REAR	8G-13
WINDOW DEFOGGER - DIAGNOSIS AND TESTING	8G-14
WINDOW DEFOGGER - OPERATION, REAR	8G-13
WINDOW DEFOGGER GRID - DESCRIPTION, REAR	8G-15
WINDOW DEFOGGER GRID - DIAGNOSIS AND TESTING, REAR	8G-15
WINDOW DEFOGGER GRID - OPERATION, REAR	8G-15
WINDOW DEFOGGER RELAY - DESCRIPTION, REAR	8G-16
WINDOW DEFOGGER RELAY - DIAGNOSIS AND TESTING, REAR	8G-17
WINDOW DEFOGGER RELAY - INSTALLATION, REAR	8G-18
WINDOW DEFOGGER RELAY - OPERATION, REAR	8G-17
WINDOW DEFOGGER RELAY - REMOVAL, REAR	8G-18
WINDOW DEFOGGER SWITCH - DESCRIPTION, REAR	8G-18
WINDOW DEFOGGER SWITCH - DIAGNOSIS AND TESTING, REAR	8G-19
WINDOW DEFOGGER SWITCH - OPERATION, REAR	8G-19
WINDOW DEFOGGER SWITCH - REMOVAL, REAR	8G-19
WINDOW MOTOR - DESCRIPTION	8N-37
WINDOW MOTOR - DIAGNOSIS AND TESTING	8N-37
WINDOW MOTOR - INSTALLATION	8N-38
WINDOW MOTOR - OPERATION	8N-37
WINDOW MOTOR - REMOVAL	8N-38
WINDOW REGULATOR - INSTALLATION	23-106, 23-112
WINDOW REGULATOR - REMOVAL	23-106, 23-112
WINDOW SWITCH - DESCRIPTION, POWER	8N-35
WINDOW SWITCH - DIAGNOSIS AND TESTING, POWER	8N-36
WINDOW SWITCH - INSTALLATION, POWER	8N-36
WINDOW SWITCH - OPERATION, POWER	8N-35
WINDOW SWITCH - REMOVAL, POWER	8N-36
WINDOWS - DESCRIPTION, POWER	8N-32
WINDOWS - DIAGNOSIS AND TESTING, POWER	8N-33
WINDOWS - OPERATION, POWER	8N-33
WINDOWS, DOORS AND LOCKS - INSPECTION	30-10
WINDSHIELD - DESCRIPTION	23-183
WINDSHIELD - INSTALLATION	23-185
WINDSHIELD - REMOVAL	23-184
WINDSHIELD WIPERS/WASHERS, ROAD TEST - INSPECTION	30-13
WIPER & WASHER SYSTEM - CLEANING, FRONT	8R-7
WIPER & WASHER SYSTEM - CLEANING, REAR	8R-34
WIPER & WASHER SYSTEM - DIAGNOSIS AND TESTING, FRONT	8R-4
WIPER & WASHER SYSTEM - DIAGNOSIS AND TESTING, REAR	8R-33
WIPER & WASHER SYSTEM - INSPECTION, FRONT	8R-7
WIPER & WASHER SYSTEM - INSPECTION, REAR	8R-35
WIPER ARM - DESCRIPTION, FRONT	8R-12
WIPER ARM - DESCRIPTION, REAR	8R-39
WIPER ARM - INSTALLATION, FRONT	8R-13
WIPER ARM - INSTALLATION, REAR	8R-40
WIPER ARM - OPERATION, FRONT	8R-13
WIPER ARM - OPERATION, REAR	8R-39
WIPER ARM - REMOVAL, FRONT	8R-13
WIPER ARM - REMOVAL, REAR	8R-40
WIPER ARM PARK RAMP - INSTALLATION	8R-44
WIPER ARM PARK RAMP - REMOVAL	8R-44
WIPER BLADE - DESCRIPTION, FRONT	8R-14
WIPER BLADE - DESCRIPTION, REAR	8R-40
WIPER BLADE - INSTALLATION, FRONT	8R-14
WIPER BLADE - INSTALLATION, REAR	8R-42
WIPER BLADE - OPERATION, FRONT	8R-14
WIPER BLADE - OPERATION, REAR	8R-41
WIPER BLADE - REMOVAL, FRONT	8R-14
WIPER BLADE - REMOVAL, REAR	8R-41
WIPER HIGH/LOW RELAY - DESCRIPTION	8R-24
WIPER HIGH/LOW RELAY - DIAGNOSIS AND TESTING	8R-25
WIPER HIGH/LOW RELAY - INSTALLATION	8R-27
WIPER HIGH/LOW RELAY - OPERATION	8R-25
WIPER HIGH/LOW RELAY - REMOVAL	8R-26
WIPER MODULE - DESCRIPTION, FRONT	8R-15
WIPER MODULE - DESCRIPTION, REAR	8R-42
WIPER MODULE - INSTALLATION, FRONT	8R-16
WIPER MODULE - INSTALLATION, REAR	8R-44
WIPER MODULE - OPERATION, FRONT	8R-15
WIPER MODULE - OPERATION, REAR	8R-43
WIPER MODULE - REMOVAL, FRONT	8R-16
WIPER MODULE - REMOVAL, REAR	8R-43
WIPER ON/OFF RELAY - DESCRIPTION	8R-27
WIPER ON/OFF RELAY - DIAGNOSIS AND TESTING	8R-28
WIPER ON/OFF RELAY - INSTALLATION	8R-30
WIPER ON/OFF RELAY - OPERATION	8R-28
WIPER ON/OFF RELAY - REMOVAL	8R-29
WIPERS/WASHERS - DESCRIPTION, FRONT	8R-2
WIPERS/WASHERS - DESCRIPTION, REAR	8R-31
WIPERS/WASHERS - OPERATION, FRONT	8R-3
WIPERS/WASHERS - OPERATION, REAR	8R-32
WIPERS/WASHERS, ROAD TEST - INSPECTION WINDSHIELD	30-13
WIRE HARNESS CONNECTOR - DESCRIPTION, IGNITION-OFF DRAW	8W-17

Description	Group-Page
WIRE HARNESS CONNECTOR - OPERATION, IGNITION-OFF DRAW	8W-18
WIRE SPLICING - STANDARD PROCEDURE	8W-12
WIRING - INSPECTION	30-7
WIRING DIAGRAMS - DESCRIPTION, HOW TO USE	8W-1
WIRING HARNESS - DIAGNOSIS AND TESTING	8W-4
WIRING/TERMINAL - SPECIAL TOOLS	8W-8
WJ PAINT COLOR CODES, SPECIFICATIONS - 2001	23-170
WORM SHAFT - INSTALLATION	19-28
WORM SHAFT - REMOVAL	19-28
WORN THREADS - STANDARD PROCEDURE, REPAIR DAMAGED OR	9-10,9-70
ZONE CONTROL SYSTEM - DIAGNOSIS AND TESTING, AUTOMATIC	24-18

SERVICE MANUAL COMMENTS

What features do you find most useful? _____

_____

_____

_____

_____

What errors have you found? Please include page number. _____

_____

_____

_____

_____

What topics are hard to locate, confusing, or not covered completely? _____

_____

_____

_____

_____

What comments or suggestions do you have? _____

_____

_____

_____

_____

Your Name: _____ Dealership: _____

Address: _____

_____

Manual Name, Year and Number: _____

All comments become property of DaimlerChrysler Corporation and may be used without compensation.

(FOLD HERE)

NO POSTAGE
NECESSARY
IF MAILED
IN THE
UNITED
STATES

BUSINESS REPLY MAIL

FIRST CLASS MAIL PERMIT NO. 124 CENTER LINE, MI

POSTAGE WILL BE PAID BY ADDRESSEE

DaimlerChrysler Corporation
Dealer Technical Operations
800 Chrysler Drive
CIMS 486-02-76
Auburn Hills, MI 48326-2757

(FOLD HERE)